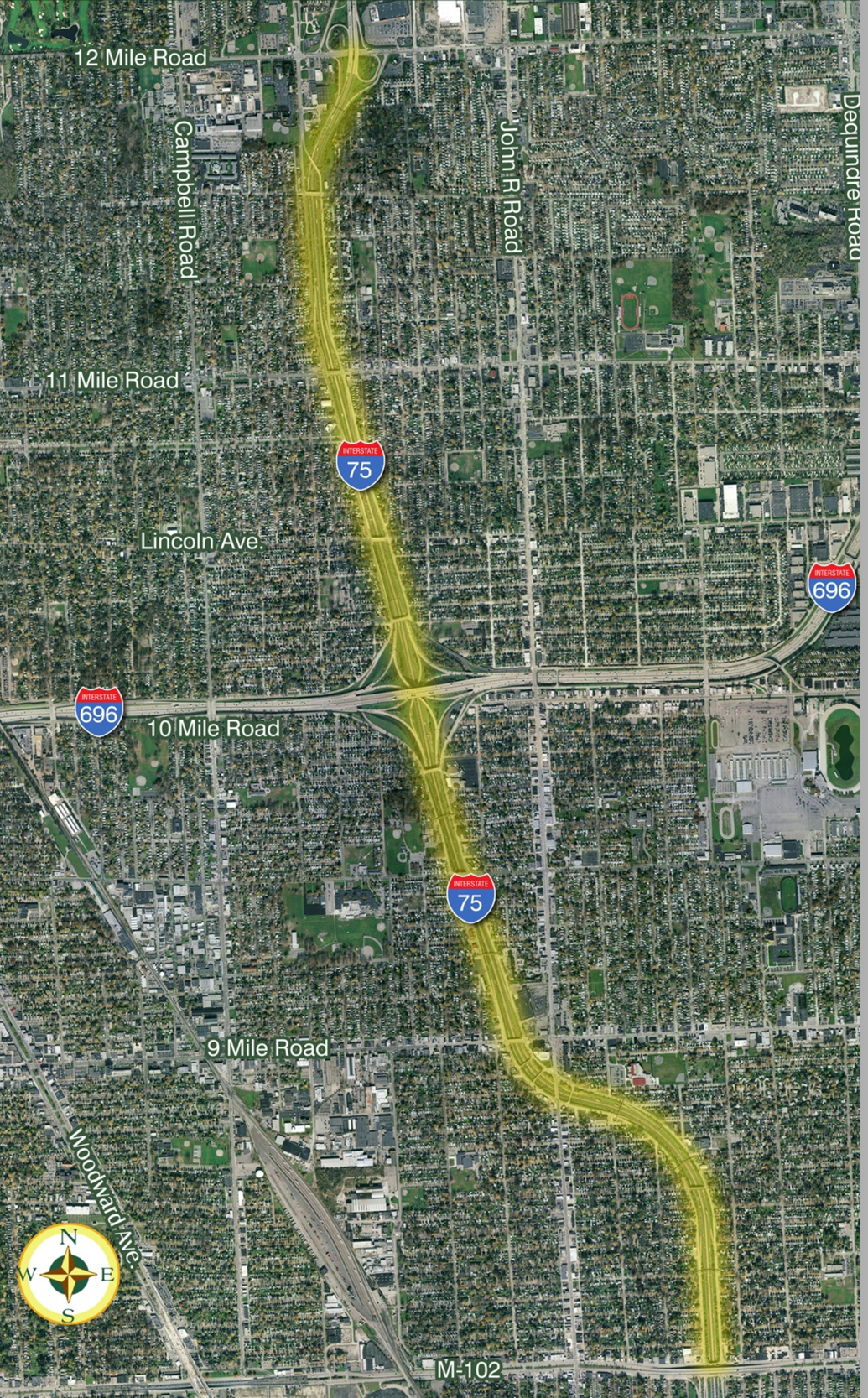

I-75 Engineering Report

M-102 to South of 12 Mile Rd

CS 63174 – JN 45700 and 100948

Appendix D
Retaining Walls

Submitted to:

Michigan Department of Transportation

August, 2010

Purpose and Scope

The purpose of the retaining wall concept study is to develop options for earth retaining structures along the I-75 corridor from 8 Mile Road to south of 12 Mile Road. It does not address abutment or retaining walls associated with proposed bridge structures, as this is covered in the Bridge Studies. The proposed section of I-75 includes the addition of a lane in each direction. The widening of this depressed freeway segment within the corridor will require cutting into the existing side slopes on each side of I-75. Subsequently, the exposed earth will need to be retained by some type of structure. It should be noted that no additional structural geotechnical investigation was performed as part of this contract, but existing soil boring information was used for existing bridges along the corridor.

This evaluation includes several earth retaining systems, recommends preliminary retaining wall concepts, and generally defines the type and limits of each wall along the corridor.

Retaining Wall History in the Project Area

The corridor was constructed as a depressed freeway in the 1960s and utilizes earth retaining structures adjacent to crossover bridges as well as on the east side of the freeway from Woodward Heights Boulevard to I-696. The existing retaining walls are concrete cast-in-place cantilever walls supported on spread footings, as shown in Figure 1. The retaining walls are approximately 25 feet or less in height with grass and lightly vegetated slopes, graded up at approximately two vertical to one horizontal (2:1), to service drives. There are brick faced sound walls at the top of the embankment between the service drives and the I-75 travel lanes, north of I-696 to 12 Mile Road. As shown in Figure 2, the sound walls are reinforced concrete structures supported on concrete drilled shaft foundations, and were constructed in the 1990s.

Figure 1 Existing I-75 Concrete Cantilever Wall

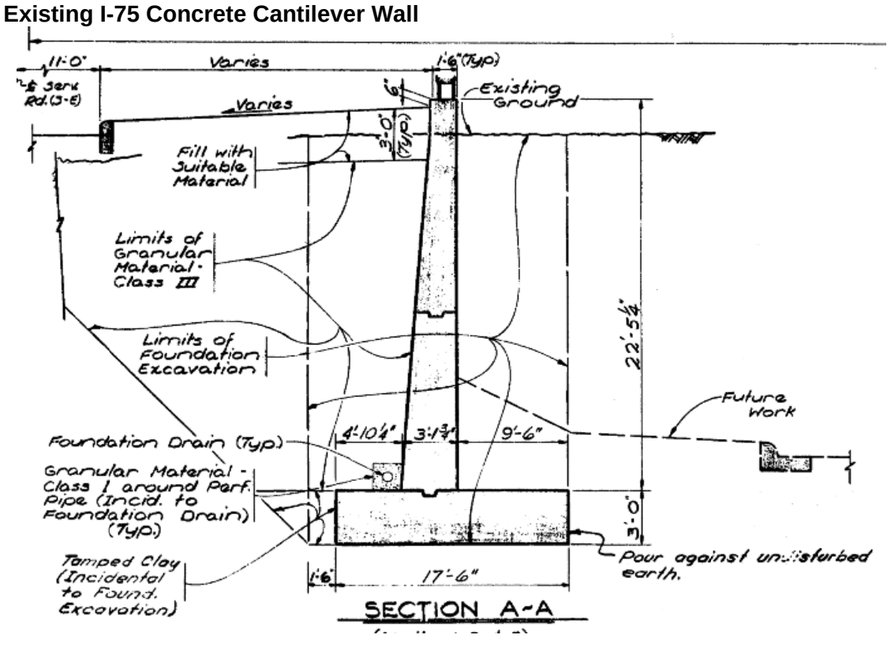

Figure 2 Existing I-75 Sound Wall

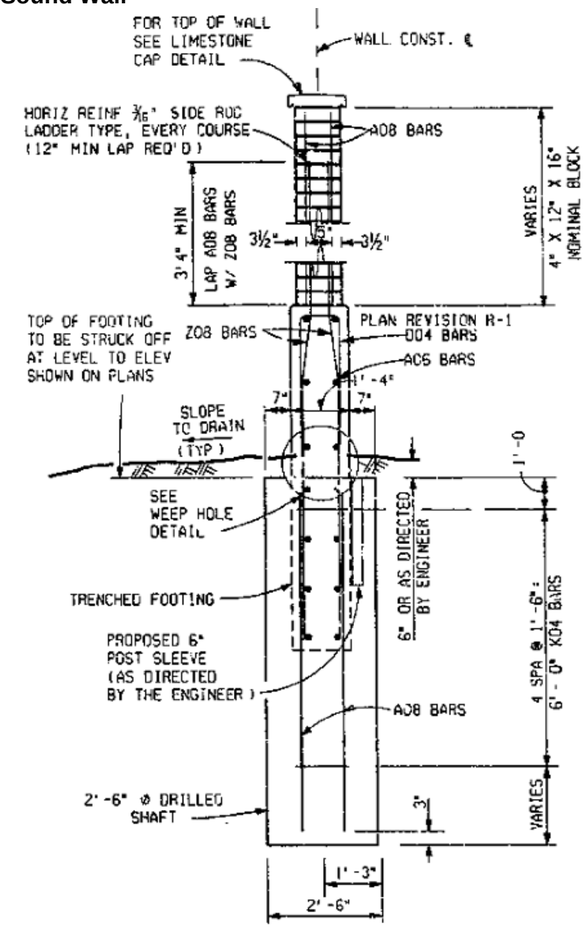

Earth Retaining Structure Types Considered

This analysis considered four retaining wall types:

- Steel soldier pile wall
- Steel sheet pile wall
- Cast in place (CIP) or precast concrete cantilever wall
- Mechanically Stabilized Earth (MSE) walls

Other retaining wall types, such as secant or soil nail walls, were not considered due to their lack of applicability to the site and geotechnical conditions, lack of common use in Michigan, and relative economy.

Issues Considered

When developing and recommending earth retaining systems, consideration was given to performance and risk, constructability, maintenance, environmental impacts, aesthetics, and economy.

- Performance and risk considers the potential issues or limitations associated with different types of earth retaining systems.
- Constructability relates to the ability to construct various options considering physical constraints, proposed bridge and utility construction, geotechnical constraints, and traffic construction staging.
- Maintenance considers future work required to keep the wall system functioning as designed and includes painting, future utility construction, landscaping, drainage, graffiti removal, and damage repair.
- Environmental impacts take into consideration the effects of construction noise such as pile driving on adjacent residential communities.
- Aesthetics pertains to how the walls appear to motorists and to the residential communities, pedestrians, and businesses along the service drive.
- Economy pertains to choosing the most economical wall.

Earth Retaining Structure Types

Existing soil boring information indicates firm to stiff clays mixed with sand, fine gravel, and silt. Blow counts vary from around 6 to 10 in the upper layers and reach the low 20's. Soils in the vicinity of the I-75/I-696 interchange are weaker and have lower blow counts in the 2 to 6 range. For this analysis, soil conditions were assumed to be consistent throughout the corridor. Field conditions vary and will require geotechnical investigation in design. The geotechnical report states that, "we do not anticipate global stability of the retaining structure to be a governing issue."

The following sections give a brief description of four different types of earth retaining systems considered.

Steel Soldier Pile Wall

Steel soldier pile walls are typically installed in cut sections and constructed by driving vertical steel H piles at approximately six foot centers and placing timber or precast concrete lagging panels from the top down between pile webs. Soil conditions and the depth of the excavation may require tie-backs that consist of steel bars placed in holes drilled horizontally into the banks of the excavation and grouted or augured. These walls can be used in fill sections too, but are not practical in cases where tie backs are required, since the installation of tie backs usually requires a deadman[1], which is a substantial cost. An elevation and section of a typical steel soldier pile wall with concrete lagging and a concrete top coping is illustrated in Figure 3. An example is shown in Figure 4. Steel soldier pile walls taller than approximately 20 feet require horizontal whalers and tie backs, as shown in Figure 5, to limit deflection and stresses.

Figure 3 Elevation and Section of Steel Soldier Pile Wall with Precast Concrete Lagging

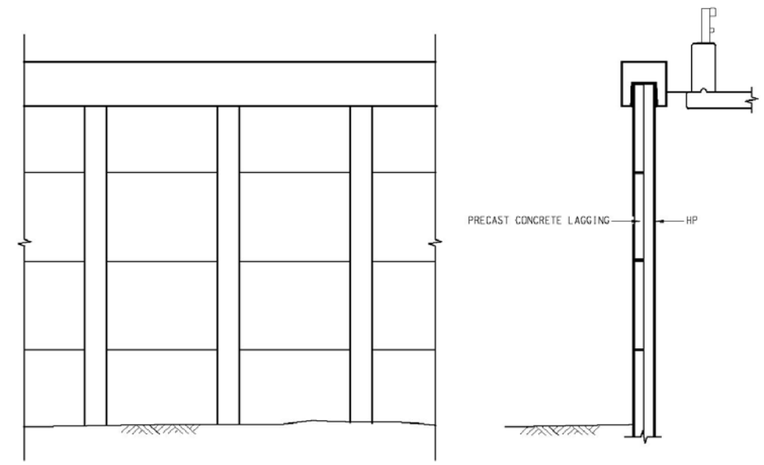

Figure 4 Soldier Pile Wall

[1] A deadman is a common structural term for a wall anchor parallel to the wall, which can be a massive concrete block, another row of pile, or sheet pile, which is tied to the retaining wall.

Figure 5 Tied Back Steel Soldier Pile

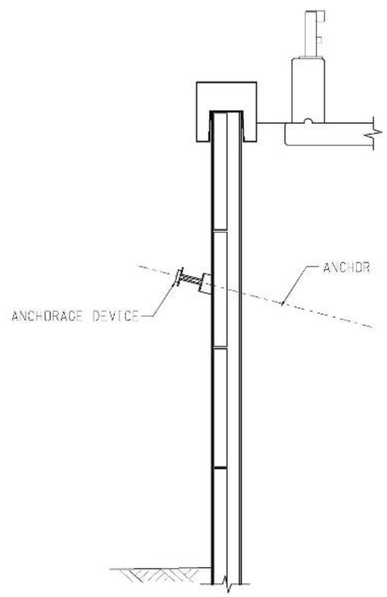

Steel soldier pile walls have a small footprint and are used where excavation behind the wall is not allowed. Tie backs required for taller soldier pile walls may conflict with utilities behind the wall or complicate proposed utility work and require right-of-way for the length of the tie-back.

Construction of steel soldier pile walls requires a crane with pile driving leads or earth auger, with overhead clearance for such equipment. Consequently, at crossover bridge locations, steel soldier pile wall construction would have to be staged after existing bridge demolition and before proposed bridge construction due to overhead clearance limitations. Vertical soldier piles are driven into the ground a substantial distance, and existing utilities crossing under these areas should be carefully located. If necessary, soldier piles could be spaced to avoid underground utilities.

To improve appearance steel soldier piles and horizontal steel whalers can be furnished vinyl coated or can be shop or field painted. Lagging panels can be manufactured from precast prestressed concrete. Maintenance for soldier pile walls may involve periodic painting of steel elements and tie back anchorages. Drainage behind steel soldier pile walls is accommodated by vertical strip drains and horizontal collectors.

As shown in Figure 4, steel soldier pile walls can use a textured formliner pattern on the prestressed concrete lagging panels with painted concrete to match the pile coating. However, if tie backs and whalers are required their appearance will create a discontinuous unattractive horizontal movement and cluttered utilitarian wall appearance.

During construction, noise and vibration from pile driving hammers will have an impact to adjacent residential communities and businesses. Other wall types may not require pile driving.

Soldier pile walls are relatively expensive compared to other wall types. Cost for a steel soldier pile wall in a cut section with tie-backs and precast concrete lagging is approximately $120/square foot.

Steel Sheet Pile Wall

Since subsurface utilities along a steel sheet pile wall would have to be relocated or abandoned this is not a viable alternative for this corridor.

Concrete Cantilever Wall (CIP, Precast, and Gravity Wall)

Concrete cantilever walls can be constructed in cut or fill sections. In cut sections construction of concrete cantilever walls on spread footings would involve excavating to the bottom of the proposed wall footing and excavating behind the wall, forming and casting the reinforced concrete wall footing and stem, installing a drainage system, and backfilling around the wall to grade. An illustration of a typical reinforced concrete cantilever wall on spread footings is shown in Figure 6. In the same class of concrete walls is a very short wall (less than 10 feet) which is called a concrete gravity wall.

Figure 6 Typical Concrete Cantilever Wall Section

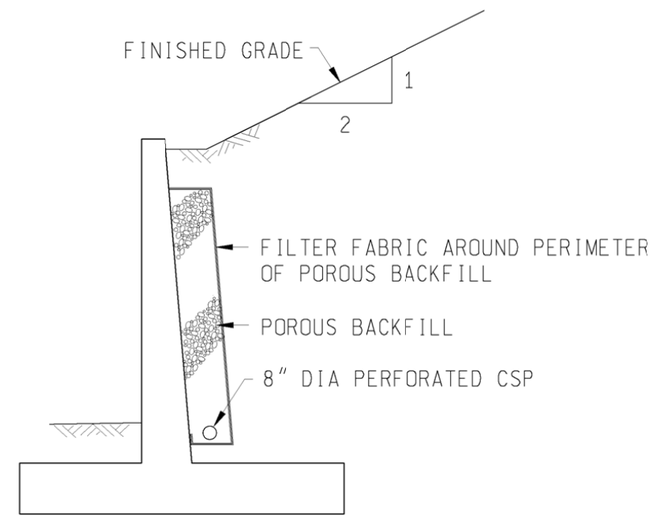

A photo of a concrete cantilever retaining wall utilizing a precast concrete stem over cast in place concrete footings is shown in Figure 7. Precast concrete cantilever wall elements can expedite construction and provide higher quality materials and create a uniform finished appearance. At locations where excavation behind the wall is restricted, the wall section can be modified as shown in Figure 8. This is a less structurally efficient arrangement and has height limitations. In addition, temporary shoring can be used behind the proposed wall to minimize excavation.

Figure 7 Precast Concrete Cantilever Wall

Figure 8 Modified Concrete Cantilever Wall Near Service Drive

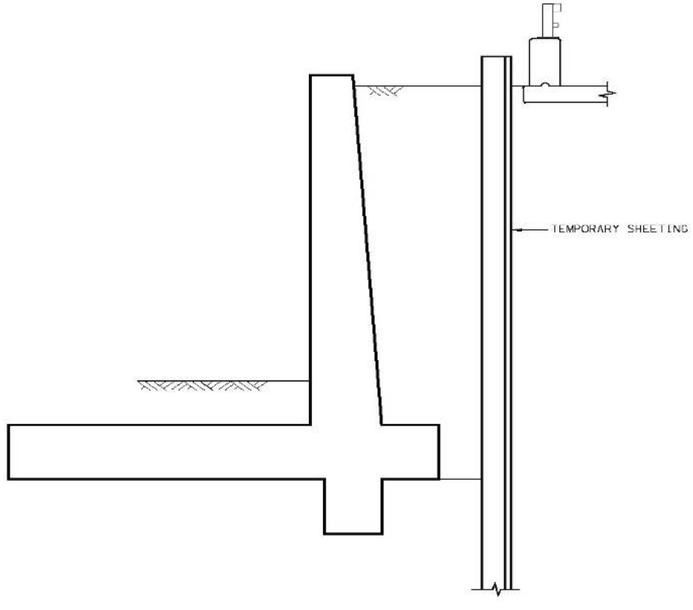

Concrete cantilever walls generally have a larger construction footprint than steel sheet pile or steel soldier pile walls. As described above, the concrete cantilever wall footprint may be reduced by using temporary steel sheeting and excavation behind the wall may be reduced by using a modified wall section. Concrete cantilever walls on spread footings are not suitable for areas with differential settlement.

Construction of concrete cantilever walls on spread footings typically involves trackhoes, bulldozers, or other excavating equipment along with conventional reinforced concrete construction. This construction is flexible, and can accommodate longitudinal and transverse subsurface utilities and overhead restrictions more readily than soldier pile construction, unless pile supports are required. At this time more geotechnical information would be required to determine the need for pile supports. Precast elements can expedite construction by removing the labor intensive field reinforced concrete construction from the critical path, which will in turn minimize disruption to traffic.

Reinforced concrete cantilever walls require little maintenance. Drainage behind the walls is a critical component to long term durability, especially where there is little sun exposure. Ohio DOT uses a drainage detail with good success. It consists of 2.0 foot thick porous backfill and geofabric extending vertically from the top of the footing to 2.0 feet below the top of subgrade and laterally to the ends of the retaining walls (see Figure 6). A fabric wrapped perforated pipe along the top of the footing collects water and is sloped to the outlet. Other premanufactured systems are also available that attach to the retaining wall fill face and allow water to drain vertically to perforated pipes.

Since concrete cantilever retaining walls on spread footings may not require pile driving, construction impacts to adjacent residences and businesses would be restricted to noise and dust from earthmoving equipment. However, at locations where temporary shoring is required, noise and vibration from equipment used to construct temporary shoring may have an impact to the adjacent residential community and businesses.

Formliners may be used on exposed concrete cantilever wall surfaces to provide a variety of finishes. Precast panels can have a wide variety of appearances. Exposed concrete wall surfaces can be field painted or an integral colored concrete may be used. Integral colored concrete has a higher initial cost, but lower maintenance costs, as it does not require repainting. The field painted concrete would require periodic repainting, so it has a lower initial cost, but a higher maintenance cost than integral colored concrete.

Cost for a concrete cantilever retaining wall as shown in Figure 6 is approximately $105/square foot based on the early preliminary estimate prepared for this project. A concrete cantilever wall with precast wall panels would range from $95 to $97 per square foot, and may bring an additional cost saving in terms of construction time.

Mechanically Stabilized Earth (MSE) Wall

MSE walls can be constructed in fill or cut sections. In cut sections, MSE walls can be used for bridge foundation construction. In a cut region the construction of MSE walls involves excavating to the bottom of the leveling pad and behind the wall, casting a small leveling pad, and placing lifts of wall panels, wall reinforcement, and free draining granular backfill. An illustration of a typical MSE wall is shown in Figure 9.

MSE walls are practical in regions where excavation is required for bridge abutments. The combination of a MSE wall and stub abutment wall on a single row of piling has cost benefits from the reduction of concrete and piling. See the Bridge Study for additional discussion.

Figure 9 Typical MSE Wall Section

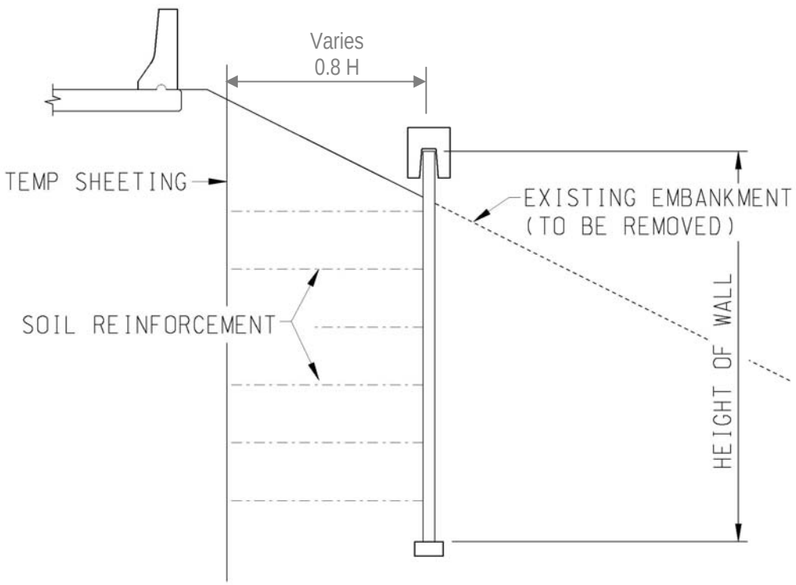

Figure 10 Aesthetic MSE Wall Facing

MSE walls have a large construction footprint. The length behind the MSE wall requiring excavation and reinforced backfill is approximately 80-percent (80%) of the MSE fill height according to the geotechnical report. Temporary shoring may be required in numerous locations where adjacent right-of-way precludes cut slopes from bottom of MSE wall excavation to grade. Due to the flexible nature of these systems, differential settlement is more tolerable than the rigid CIP system. In numerous locations, MSE soil reinforcement straps would extend under proposed service drives, requiring coordination of proposed utility work with wall construction. In addition, MSE soil reinforcing straps under the service drives could restrict future utility work.

Construction of MSE walls typically uses light earthmoving equipment and small hydraulic cranes. Construction is flexible and can accommodate subsurface utilities (running perpendicular to the walls), overhead restrictions, and placed around utilities and obstructions. Prefabricated MSE wall elements can expedite construction and minimize disruption to I-75 or service drive traffic.

MSE walls require little maintenance. Free draining granular backfill installed behind MSE panels typically requires no additional drainage system, although sometimes an underdrain collector system is installed.

Since MSE walls do not require pile driving, construction impact to adjacent residences and businesses would be restricted to noise and dust from light earthmoving equipment. At MSE wall locations where temporary shoring is required, noise and vibration from equipment used to construct temporary shoring may have an impact to adjacent residential communities and businesses.

Formliners may be used on MSE wall panel elements to produce a variety of appearances. MSE wall elements may also be field painted. An example of a textured, painted MSE wall is shown in Figure 10. MSE facing may be cast in place.

MSE walls are generally more economical when the retaining area is greater than 1,000 square feet and wall height is greater than 10 feet as would be the case for this project. Cost for MSE walls in a cut section is approximately $100/square foot.

Wall Summary

Table 1 presents a general rating of the walls in comparison to the issues considered for each type followed by general comments. Ratings are subjective on a scale of poor to excellent (1 to 5). It should be noted however that site specific issues, such as physical constraints, may be an overriding reason to select a particular wall type.

Specific Wall Cases

The physical cross section of the project is required to make a final determination of the appropriate wall type, height, and limits. At the time of this analysis the cross sections were not available. Therefore, the study focused on general wall concepts. Once cross sections are available, site specific cases will be studied and geotechnical data and recommendations will be required.

Construction of service drives, utility work, and traffic staging are significant constraints. Excavation, which impacts these, is a factor in deciding the appropriate earth retaining structure type.

Table 1 Retaining Wall Summary Comparison

WALL TYPE	ISSUE CONSIDERED						COMMENTS
	Performance & Risk	Constructability	Maintenance	Environmental Impacts	Aesthetics	Relative Cost	
Soldier Pile	3	4	2	1	1	2	• Best used in cut sections • Can be constructed in limited space • Small construction footprint • Requires pile driving • Use of whalers and tiebacks not very aesthetic
Concrete Cantilever (CIP)	4	3	4	4	4	3	• Can be constructed in cut & fill sections • Can be constructed in limited space • Requires substantial excavation & concrete work • Moderate construction footprint • Can accommodate all utilities • Good durability & aesthetics
Concrete Cantilever (CIP) (w/ H-piles)	4	2	4	1	4	1	• Requires additional overhead space
Concrete Cantilever (Precast) (no H-piles)	4	4	5	4	5	5	• Removes elements from critical path • Reduces field concrete work • Improved durability • Additional aesthetic treatments
MSE Wall	5	3	5	4	5	5	• Most economical in fill sections • Large construction footprint • Most flexible wall system (differential settlement) • Many aesthetic treatments • Durable, low maintenance • Functions well with recommended bridge types

Note: Concrete Cantilever (Gravity) not shown but similar to Concrete Cantilever (CIP).

Recommendations

Table 2 presents the wall designations (e.g., A, B, C, etc.), recommended wall type, and recommendation considerations. Common to all recommendations is economy and individual physical constraints. See Figures 11 through 14 for the wall locations. Each individual wall designation (A, B, etc.) is a separate wall section. Adjacent wall sections will be designated with a number, such as D1 through D4. The bridge study recommends MSE walls at the bridge abutments. In some areas, for example Wall A and S22 of 63174, there will be a concrete cantilever wall adjacent to an MSE wall. Having adjacent walls of different types will require attention in the final design phase to account for differences in differential settlement and rotation at the interface.

Table 2 Retaining Wall Recommendations and Considerations

WALL DESIGNATION	RECOMMENDED WALL TYPE	COMMENTS
A	Concrete Cantilever (CIP)	• Minimize embankment excavation to preclude the use of tiebacks or MSE wall straps under the adjacent service drives • 60 inch storm drain parallel to Wall B • Proposed pump station located next to Wall B
B	Concrete Cantilever (CIP)	• Same as A
C	Concrete Cantilever (CIP)	• Minimize embankment excavation under the SB service drive
D1	Concrete Cantilever (CIP)	• Minimize embankment excavation • The proposed 60 inch storm drain and NB service drive are both approximately 40 feet from the wall face, and may be sufficiently beyond excavation limits to permit the use of an MSE wall at this location
D2	MSE	• Wall passes under the proposed John R and 9 Mile Road bridges and has a maximum height of approximately 35 feet • Beyond the practical range of a typical concrete cantilever wall • Proposed 78 inch storm drain under the NB service drive may need to be located away from Wall D2 to avoid interference with MSE wall straps • The adjacent multi-story hotel at John R and 9 Mile Road may potentially be within the Wall D2 excavation limits, and temporary shoring will be required for wall construction
D3	Concrete Cantilever (CIP)	• Minimize embankment excavation which would interfere with the proposed storm drain and extend under the NB service drive • The NB service drive and proposed 78 inch diameter storm drain are approximately 15 feet from the face of Wall D3
D4	Concrete Cantilever (CIP)	• Same as D3
E	Concrete Cantilever (Gravity)	• Horizontal alignment shifts to the east away from Wall E, and the maximum required wall height is approximately 8 feet
F	Concrete Cantilever (CIP)	• Minimize embankment excavation • Preclude the use of tiebacks or MSE wall straps under the adjacent SB service drive, and to match the appearance of Wall D4 on the east side of I-75 • The distance between the face of Wall F and the SB service drive varies between approximately 4 feet to 40 feet • The proposed grade of I-75 is lowered several feet under Woodward Heights Boulevard
G	Concrete Cantilever (CIP)	• Minimize embankment excavation and to preclude the use of tiebacks or MSE wall straps under the adjacent service drives • Simplify the construction of the relocated service drive and the 96 inch storm drain parallel to Wall I
H1	MSE	• Wall pairs around braided ramp

WALL DESIGNATION	RECOMMENDED WALL TYPE	COMMENTS
H2	MSE	• Same as H1
H3	MSE	• Same as H1
H4	MSE	• Same as H1
I	Concrete Cantilever (CIP)	• Same as G
J	Concrete Cantilever (CIP)	• Minimize embankment excavation and to preclude the use of tiebacks or MSE wall straps under the adjacent service drives • Proposed 77 inch x 121 inch storm drain parallel to Wall K • Proposed pump station located adjacent to Wall K
K	Concrete Cantilever (CIP)	• Same as J
L	Concrete Cantilever (CIP)	• Minimize embankment excavation
M1	Concrete Cantilever (CIP)	• Minimize embankment excavation • 77 inch x 121 inch storm drain and NB service drive, both approximately 35 feet from the wall face
M2	MSE	• Wall passes under the proposed Gardenia Avenue bridge and the Gardenia Avenue flyover structure and has a maximum height of approximately 35 feet • Beyond the practical range of a typical concrete cantilever wall • Proposed 77 inch x 121 inch storm drain under the north service drive may need to be located away from Wall M2 to avoid interference with MSE wall straps
M3	Concrete Cantilever (CIP)	• Minimize embankment excavation • 77 inch x 121 inch storm drain

Cost Estimates

A general unit cost estimate by wall type is presented in Table 3. These estimated costs are based on moderately high walls (around 20 to 25 feet high). Wall costs were estimated based on a generic design and historic MDOT unit costs. All wall costs assume a cut section with granular backfill. Temporary shoring is not included in the costs as this is a location specific cost. As walls become shorter or taller, the cost difference between walls will change. For instance, as the walls become shorter, a concrete cantilever wall will become less expensive than an MSE wall.

For the cantilever wall two costs are presented, with and without H-piles. The geotechnical report noted that a pile supported footing may be required in some areas due to differential settlement concerns.

Table 3 Retaining Wall Cost Estimate - Unit Prices

TYPE	ESTIMATED COST /SQ.FT
Soldier Pile with Precast Concrete Lagging Wall (with tieback)	$120
Cantilever Wall (CIP)	$105
Cantilever Wall (CIP) with h-piles)	$160
Precast Cantilever Wall	$95 - $97
Steel Sheet Piling with Vinyl Coating (with tieback)	$110
MSE Wall	$100

Table 4 presents the estimated wall cost for each recommended wall and the total estimated wall cost.

Table 4 Retaining Wall Cost Estimate

WALL DESIGNATION	BEGIN STA.	END STA.	LEFT / RIGHT	LENGTH (FT)	MAX HEIGHT (FT)	WALL TYPE	WALL COST ($X1000)
A	717	727	LT	1,000	14	Concrete Cantilever	665
B	717	731	RT	1,400	30	Concrete Cantilever	2,594
C	739	747	LT	800	18	Concrete Cantilever	720
D1	745	752	RT	700	30	Concrete Cantilever	1,176
D2	752	762	RT	1,000	35	MSE	4,255
D3	762	771	RT	900	20	Concrete Cantilever	1,843
D4	771	807	RT	3,600	33	Concrete Cantilever	6,720
E	761	769	LT	800	8	Concrete Gravity	225
F	779	807	LT	2,800	18	Concrete Cantilever	4,557
G	831	851	LT	2,000	20	Concrete Cantilever	2,982
H1	827	831	LT	400	25	MSE	500
H2	827	831	RT	400	25	MSE	500
H3	835	839	LT	400	25	MSE	500
H4	835	839	RT	400	25	MSE	500
I	839	851	RT	1,200	20	Concrete Cantilever	1,638
J	867	879	LT	1,200	20	Concrete Cantilever	1,290
K	867	879	RT	1,200	20	Concrete Cantilever	1,290
L	893	901	LT	800	20	Concrete Cantilever	870
M1	893	899	RT	600	28	Concrete Cantilever	1,260
M2	899	905	RT	600	35	MSE	2,150
M3	905	907	RT	200	15	Concrete Cantilever	158
				Subtotal			$36,393,000*
				Total - 2009 Dollars			$36,393,000
				Total - 2026 Dollars (Escalated at 4% / Year)			$68,163,406

* Wall costs have a 50% contingency which includes the cost of temporary structures if required

Figure 11 Wall Locations Sheet 1

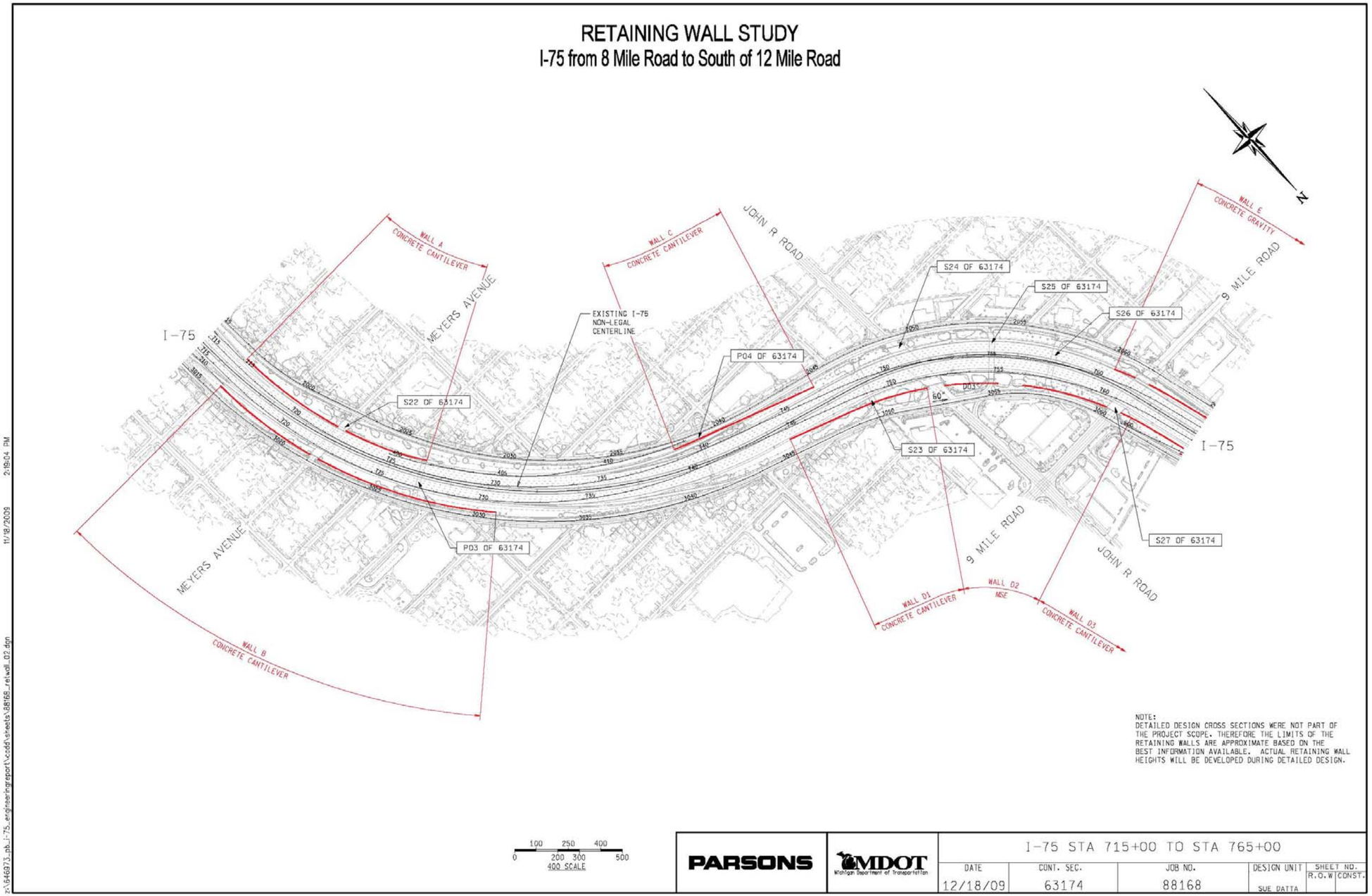

Figure 12 Wall Locations Sheet 2

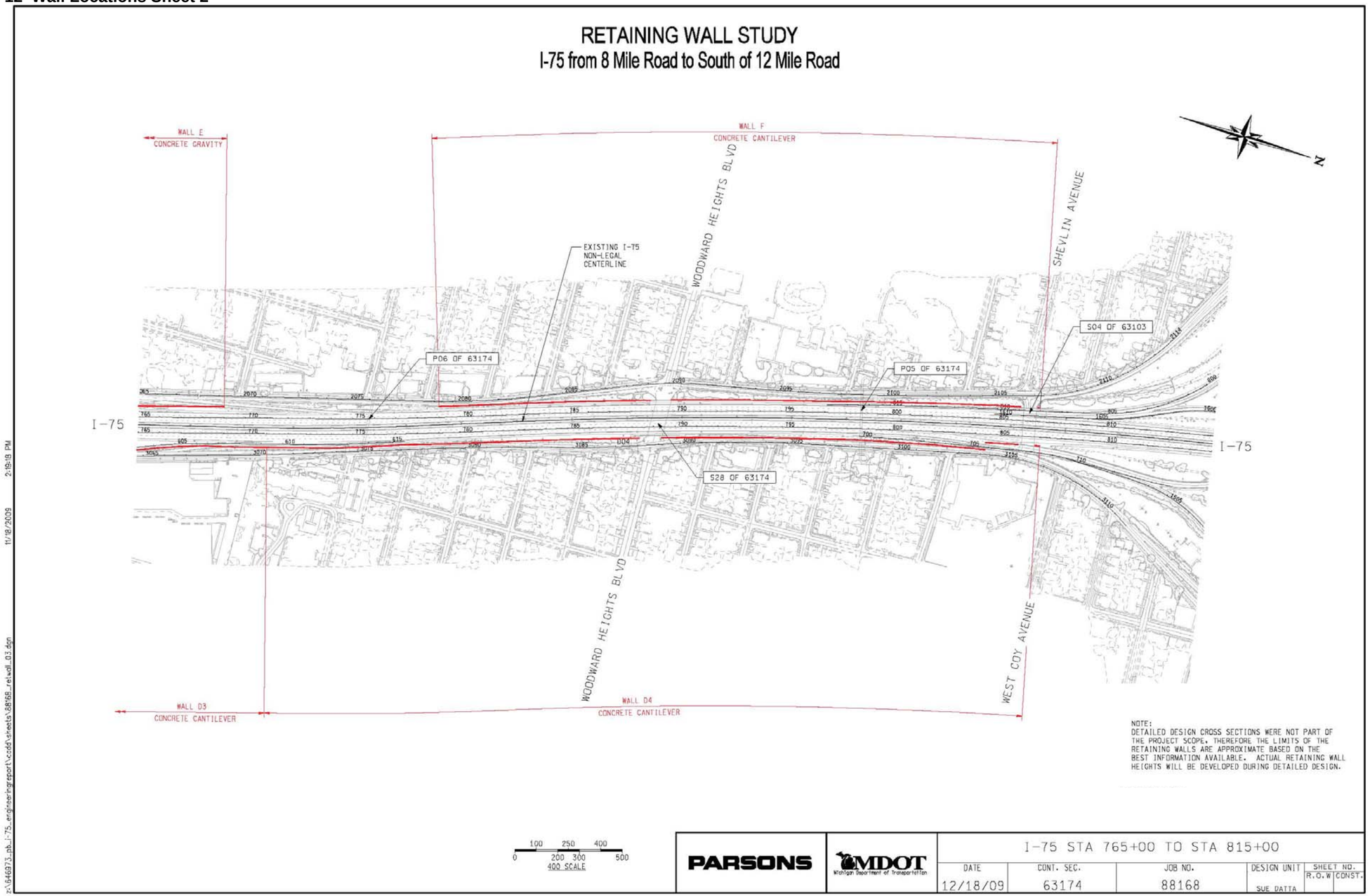

Figure 13 Wall Locations Sheet 3

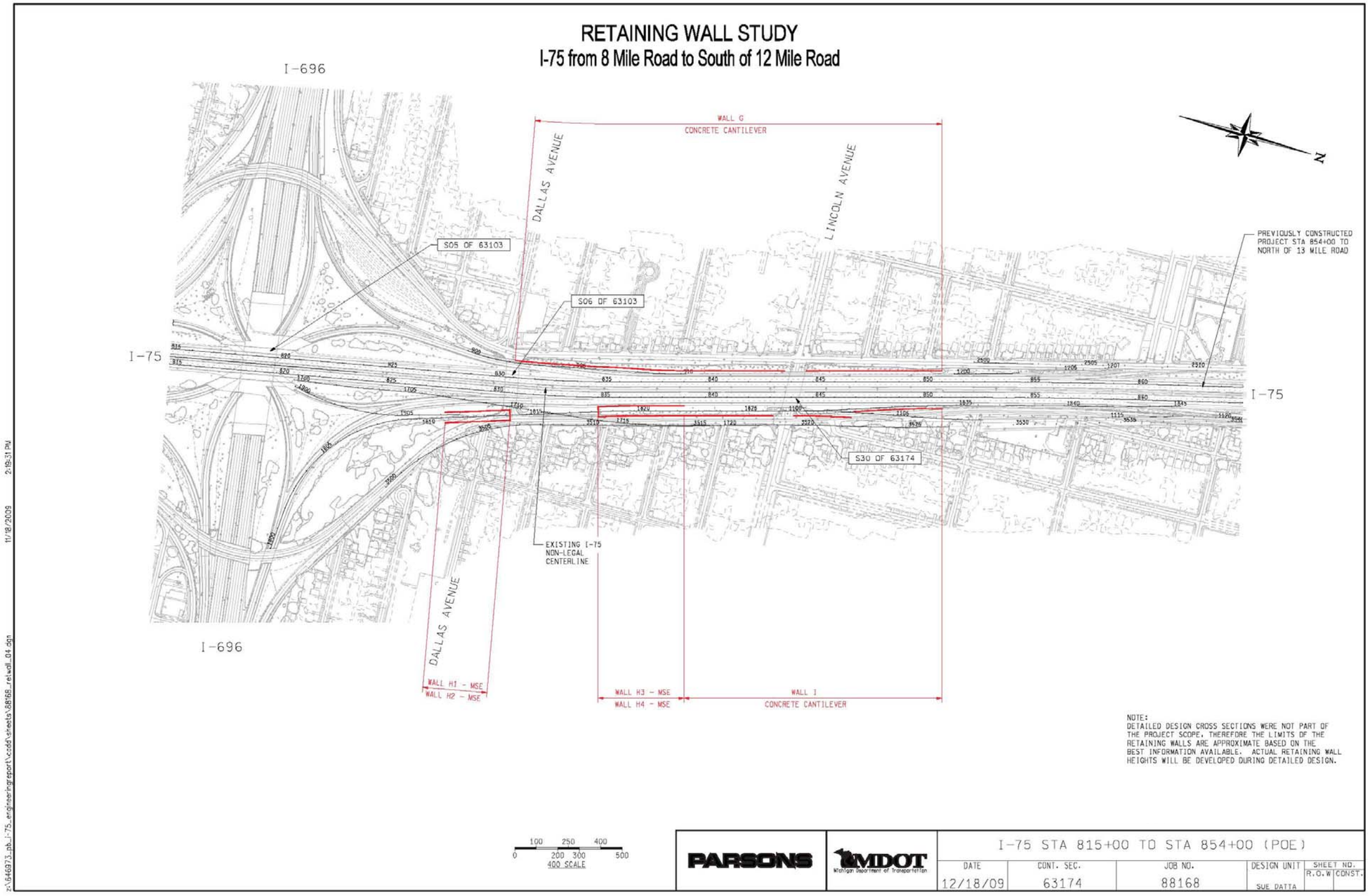
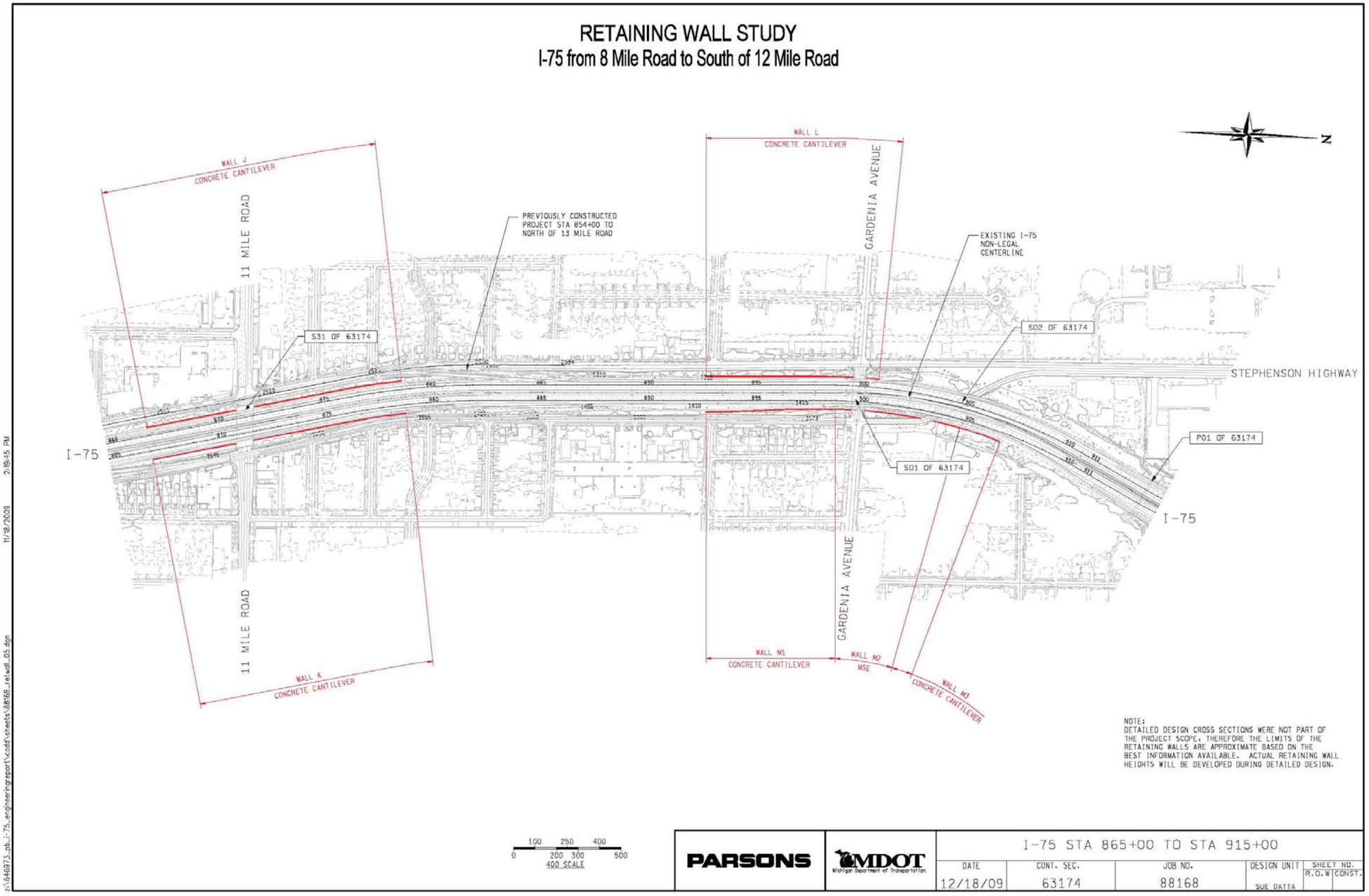
Figure 14 Wall Locations Sheet 4