Road & Bridge Design Publications

Monthly Update - December 2011

Revisions for the month of **December** are listed and displayed below. New special details are to be included in projects submitted for the **March** letting as is stated on the special detail index sheets. Please contact Wayne Pikka (pikkaw@michigan.gov) for any questions related to the road changes and Vladimir Zokvic (zokvicv@michigan.gov) for questions related to the bridge changes.

Note: With this month's updates, previously announced "interim updates" have been incorporated into Road Design Manual Chapters Seven through Ten, Twelve, and Thirteen. In addition, MDOT Division, Section, and Unit name changes were made to these chapters, along with revising the titles of the DNR/DEQ.

Special Details

R-45-I: Pavement Reinforcement for Bridge Approach: On sheet one in the top sketch, the label "bridge reference line or sleeper slab" was revised to "end of slab (at bridge reference line or sleeper slab). On sheet 2 in the top two sketches, the label "3 inch cover to outside of bar" was revised to "3 inch clear concrete cover". The location of the bridge reference line was revised to its correct position (outside edge of pavement seat instead of inside edge). The term "width of shoulder seat" was revised to "width of pavement / shoulder seat". In the sketch, the width of the seat was increased to avoid confusing the location of the outside edge of the seat with the end of the top and bottom reinforcing bars.

Bridge Design Manual

7.02.13 A. – Clarified the quantity and payment of splices in plate girders.

7.02.20 A. (LRFD Only) – Updated AASHTO LRFD section for negative moment reinforcement.

7.03.12 E.4. – Defined height of MSE wall when abutment is in the vicinity of the MSE wall.

Bridge Design Guides

6.05.03 - Added note to "match bridge shoulder slope and direction with adjacent thru lane". The "Two Lane Ramp" detail is clarified to apply to single crown ramps only. It does not imply that single crown is used exclusively.

Road & Bridge Design Publications

Monthly Update - December 2011

6.28.06 - Deleted requirement for coefficient of friction of cover plate. Cover plates shall still be slip resistant but no specific coefficient of friction value will be required. Special provision shall cover requirements.

6.29.10 B - Added waterstop to sections.

6.42.03 - Defined “F”, fascia depth, and set rules if “F” is greater than 12 inches. This goes along with other guides updated for “F” previously.

Please note: Corresponding updates to automated tools, including but not limited to the MDOT Bulletin Board, MDOT Cell Library, Bridge Auto Draw Program, etc., may be required in tandem with some of this month's updates. Until such updates to automated tools can be made, it is the designer's/detailer's responsibility to manually incorporate any necessary revisions to notes and plan details to reflect these revisions.

Index to Special Details

12-22-2011

⑥

SPECIAL DETAIL NUMBER	NUMBER OF SHEETS	TITLE	CURRENT DATE
21	2	GUARDRAIL AT INTERSECTIONS	5-24-01
24	5	GUARDRAIL ANCHORED IN BACK SLOPE TYPES 4B & 4T	7-22-02
R-29-H	4	DRIVEWAY OPENINGS & APPROACHES, AND CONCRETE SIDEWALK	10-20-11
R-42-F	6	TYPICAL JOINT LAYOUTS FOR CONCRETE PAVEMENT	12-6-10
R-43-I	2	LOCATION OF TRANSVERSE JOINTS IN PLAIN CONCRETE PAVEMENT	12-2-10
* R-45-I	2	PAVEMENT REINFORCEMENT FOR BRIDGE APPROACH	12-6-11
R-99-B	2	CHAIN LINK FENCE WITH WIRE ROPE	11-1-00
R-100-G	4	SEEDING AND TREE PLANTING	9-8-11

*** Denotes New or Revised Special Detail to be included in projects for (beginning with) the March letting.**

Note: Former Standard Plans IV-87, IV-89, IV-90, and IV-91 Series, used for building cast-in-place concrete head walls for elliptical and circular pipe culverts, are now being replaced with plans that detail each specific size. The Municipal Utilities Unit will provide these full sized special details for inclusion in construction plans for MDOT jobs. To assure prompt delivery, requests ***must*** be made in advance.

Former Standard Plans IV-93 and IV-94 series have been replaced with precast concrete box & three-sided culverts as per the 2012 Standard Specifications for Construction.

Index to Bridge Detail Sheets

12-22-2011

⑦

DETAIL NUMBER	NUMBER OF SHEETS	TITLE	CURRENT DATE
B-21-I	4	BRIDGE RAILING, 2 TUBE	6-3-11
B-23-E	4	BRIDGE RAILING, THRIE BEAM RETROFIT	10-19-09
B-25-G	6	BRIDGE RAILING, AESTHETIC PARAPET TUBE	7-7-11
EJ3Z	1 or 2	EXPANSION JOINT DETAILS	6-8-11
EJ4M	1 or 2	EXPANSION JOINT DETAILS	6-8-11
PC-2G	1	70" PRESTRESSED CONCRETE I-BEAM DETAILS	3-31-06
PC-4E	1	PRESTRESSED CONCRETE 1800 BEAM DETAILS	3-31-06
PC-1L	1	PRESTRESSED CONCRETE I-BEAM DETAILS	7-12-06

*** Denotes New or Revised Special Detail to be included in projects for (beginning with) the March letting.**

Note: Details EJ3Z & EJ4M are interactive, i.e. designers and detailers choose details based upon railing type and angle of crossing. Place all details appropriate for the project, structure specific information, and the Expansion Joint Device quantity on the sheet. The sheet shall then be added to the plans as a normal plan sheet.

Detail PC-1L, PC-2G and PC-4E shall have structure specific information and quantities added to the sheet. The sheet shall then be added to the plans as a normal plan sheet.

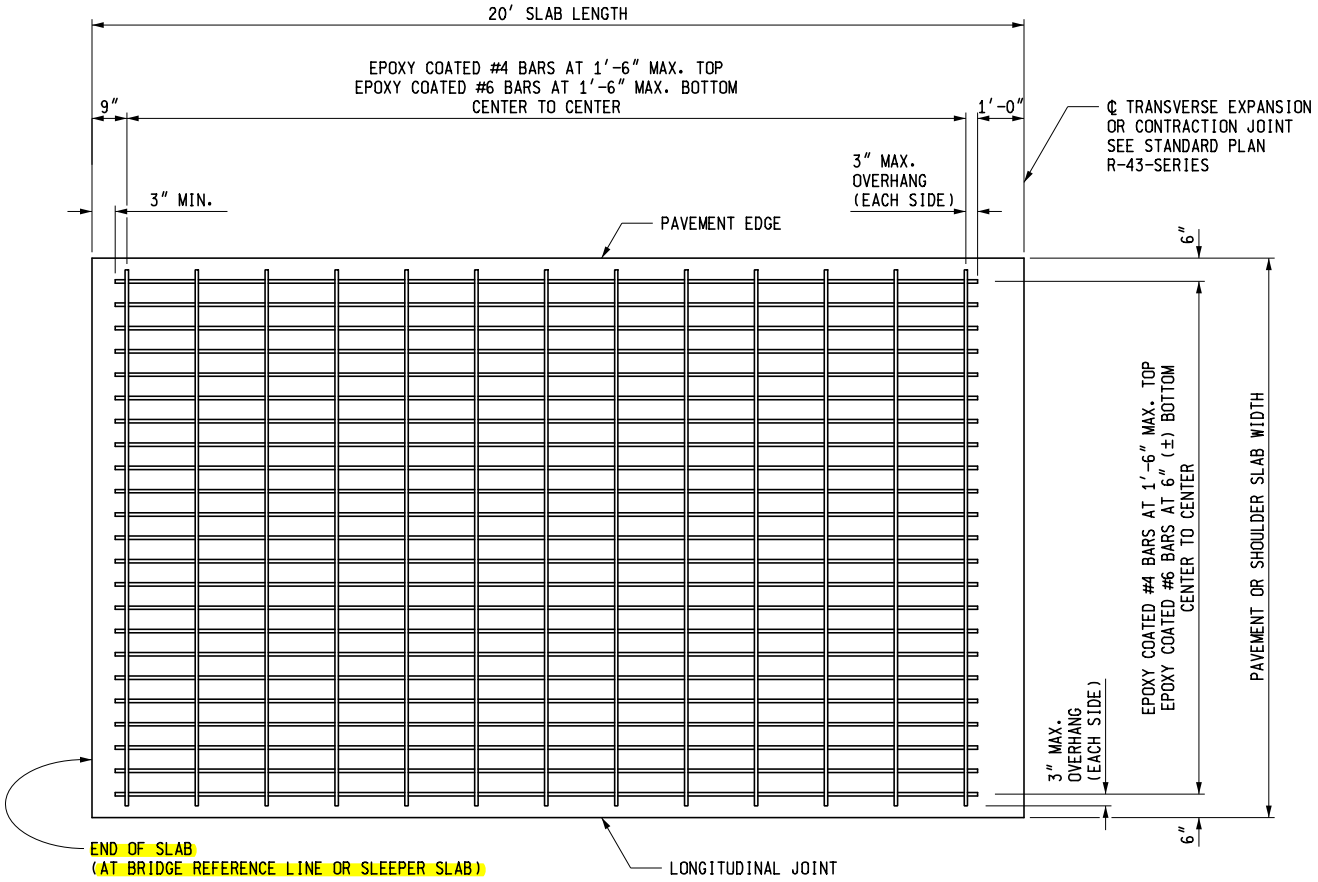

SKEWED BRIDGES WHERE SLAB IS SQUARED OFF WILL REQUIRE TRANSVERSE REINFORCEMENT TO BE FANNED IN OR THE USE OF CUT BARS WILL BE REQUIRED. MAINTAIN REINFORCEMENT SPACING AT ACUTE CORNER AND FAN IN AT OBTUSE CORNER.

REINFORCEMENT DETAIL

STEEL REINFORCEMENT		
LONGITUDINAL REINFORCEMENT		
PAVEMENT/SHOULDER SLAB WIDTH	TOP REINFORCEMENT #4 BARS AT 1′-6″ MAX.	BOTTOM REINFORCEMENT #6 BARS AT 6″ (±)
	NUMBER OF BARS (MIN.)	NUMBER OF BARS (MIN.)
10′-0″	7	19
11′-0″	8	21
12′-0″	9	23
14′-0″	10	27
3′-0″	3	5
4′-0″	3	7
5′-0″	4	9
7′-0″	5	13
9′-0″	7	17
TRANSVERSE REINFORCEMENT		
	TOP REINFORCEMENT #4 BARS AT 1′-6″ MAX.	BOTTOM REINFORCEMENT #6 BARS AT 1′-6″ MAX.

MDOT Michigan Department of Transportation

PREPARED BY DESIGN DIVISION

DRAWN BY: B.L.T.

CHECKED BY: W.K.P.

DEPARTMENT DIRECTOR
Kirk T. Steudle

APPROVED BY: _____
DIRECTOR, BUREAU OF FIELD SERVICES

APPROVED BY: _____
DIRECTOR, BUREAU OF HIGHWAY DEVELOPMENT

MICHIGAN DEPARTMENT OF TRANSPORTATION
BUREAU OF HIGHWAY DEVELOPMENT STANDARD PLAN FOR

PAVEMENT REINFORCEMENT FOR BRIDGE APPROACH

F.H.W.A. APPROVAL	12-6-2011 PLAN DATE	R-45-I	SHEET 1 OF 2

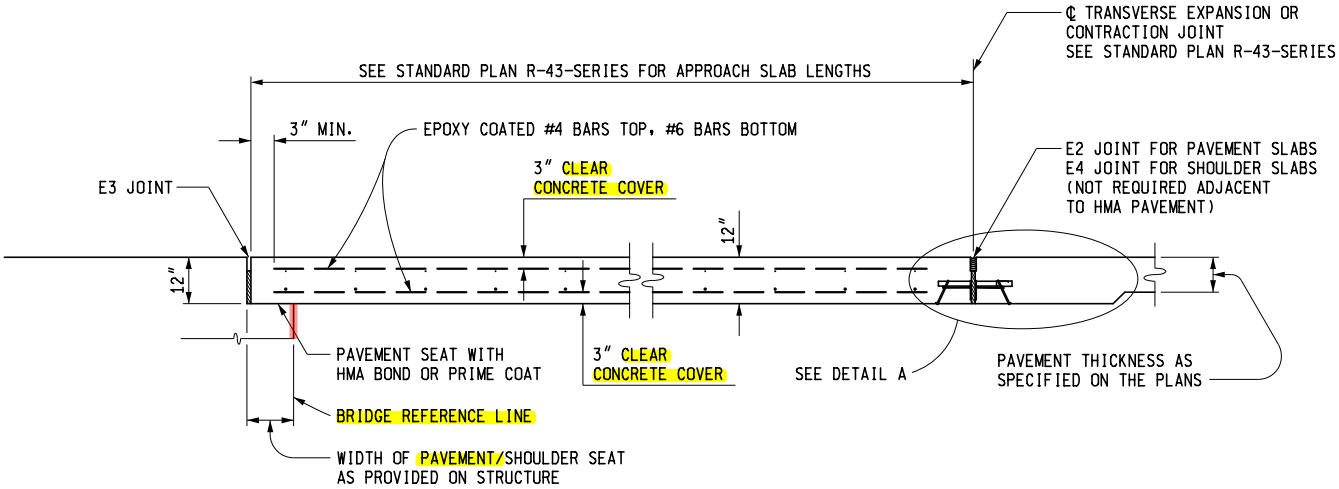

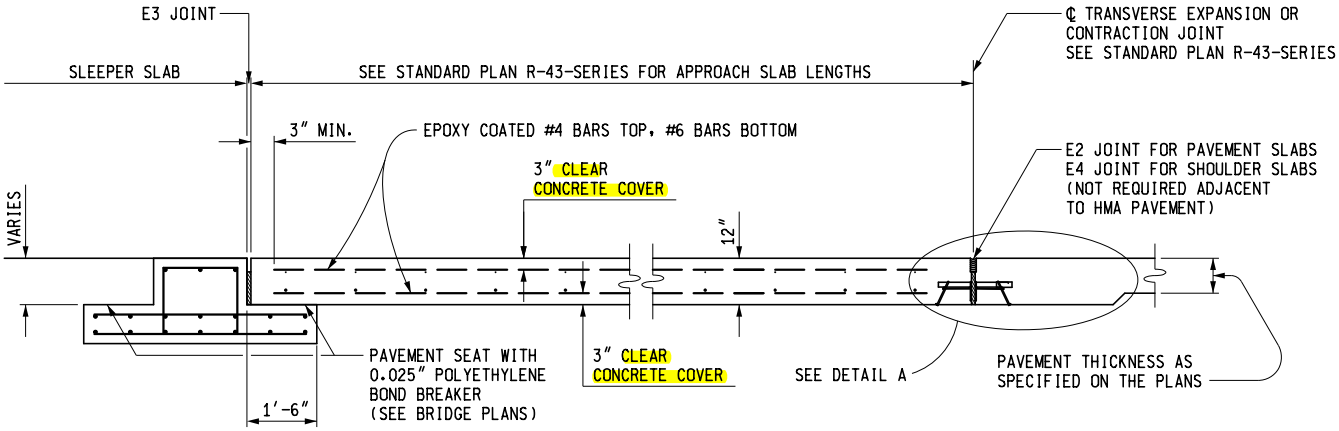

PAVEMENT AND SHOULDER SLABS ADJACENT TO STRUCTURES

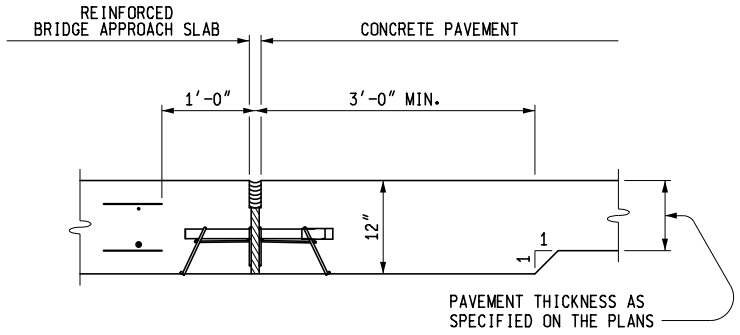

DETAIL A

NOTES:

SEE STANDARD PLANS R-39-SERIES AND R-40-SERIES FOR DETAILS OF JOINTS AND LOAD TRANSFER ASSEMBLIES.

MICHIGAN DEPARTMENT OF TRANSPORTATION
BUREAU OF HIGHWAY DEVELOPMENT STANDARD PLAN FOR

PAVEMENT REINFORCEMENT FOR BRIDGE APPROACH

F.H.W.A. APPROVAL	12-6-2011 PLAN DATE	R-45-I	SHEET 2 OF 2

7.02.12

Welding

All welding details are to be according to AWS specifications, except for minimum fillet weld sizes, which should be as shown in the Standard Specifications. Any intended deviations are to be called to the attention of the Design Supervising Engineer. (5-6-99)

Plans should show welding details but should not show the size unless a deviation from AWS specifications is intended.

Plans should also show beam or girder flange tension and stress reversal zones where lifting lugs will not be permitted.

7.02.13

Field Splices in Plate Girders

A. General

Girder Length	Field Splice
0' to 125'	None provided.
Over 125' to 160'	Field splice is shown on plans as optional; it is designed and detailed, but not paid for.
Over 160'	Field splice is designed, detailed, and paid for. *

Fabricators that wish to field splice other than as called for on the plans will need prior Design approval.

* Additional steel weight from splices will be added to quantity for "Structural Steel, Plate, Furn and Fab". (12-22-2011)

7.02.13 (continued)

B. Location

Field splices are to be located at low-stress areas at or near the point of contraflexure for continuous spans.

C. Bolts

All high strength bolts are to be galvanized.

7.02.14

Diaphragms and Crossframes

A. Orientation

When bridges are on grades, the diaphragm or crossframe connection plates are to be set normal to the flange.

B. End Diaphragms

End diaphragms or crossframes are required at ends of beams to support the end of slab unless it is supported by other means. Curved girders shall have diaphragms or crossframes placed at the centerline of support. To provide access for painting, these diaphragms or crossframes shall be no closer than 2'-0" from the beam end at independent backwalls and shall have no less than 2'-0" of clearance at simple supports. (5-6-99)

7.02.12

Welding

All welding details are to be according to AWS specifications, except for minimum fillet weld sizes, which should be as shown in the Standard Specifications. Any intended deviations are to be called to the attention of the Design Supervising Engineer. (5-6-99)

Plans should show welding details but should not show the size unless a deviation from AWS specifications is intended.

Plans should also show beam or girder flange tension and stress reversal zones where lifting lugs will not be permitted.

7.02.13

Field Splices in Plate Girders

A. General

Girder Length	Field Splice
0' to 125'	None provided.
Over 125' to 160'	Field splice is shown on plans as optional; it is designed and detailed, but not paid for.
Over 160'	Field splice is designed, detailed, and paid for. *

Fabricators that wish to field splice other than as called for on the plans will need prior Design approval.

* Additional steel weight from splices will be added to quantity for "Structural Steel, Plate, Furn and Fab". (12-22-2011)

7.02.13 (continued)

B. Location

Field splices are to be located at low-stress areas at or near the point of contraflexure for continuous spans.

C. Bolts

All high strength bolts are to be galvanized.

7.02.14

Diaphragms and Crossframes

A. Orientation (8-20-2009)

Diaphragms or cross-frames shall be provided at abutments, piers and hinge joints. Intermediate diaphragms may be used between beams in curved systems or where necessary to provide torsional resistance and support the deck at points of discontinuity or at angle in girders.

The need for diaphragms or cross-frames shall be investigated for all stages of assumed construction procedures and the final condition. Diaphragms or cross-frames required for conditions other than the final condition may be specified to be temporary bracing.

B. End Diaphragms

End diaphragms or crossframes are required at ends of beams to support the end of slab unless it is supported by other means. Curved girders shall have diaphragms or crossframes placed at the centerline of support. To provide access for painting, these diaphragms or crossframes shall be no closer than 2'-0" from the beam end at independent backwalls and shall have no less than 2'-0" of clearance at simple supports. (5-6-99)

7.02.20

Slab Reinforcement

For general steel reinforcement information applying to both superstructure and substructures, see Steel Reinforcement (Section 7.04).

A. Negative Moment Reinforcement (12-5-2005)

Where additional longitudinal reinforcement is required in regions of negative moment see AASHTO LRFD A 6.10.1.7. If the longitudinal reinforcement is considered to be a part of the composite section, shear connectors shall be provided in negative flexure regions. Where shear connectors are used in negative flexure regions, the longitudinal reinforcement shall be extended into positive flexure region (AASHTO LRFD A 5.11.1.2.3). (8-20-2009) (12-22-2011)

Bar ends should have two 3' staggers (see below) to minimize transverse cracking at bar terminations.

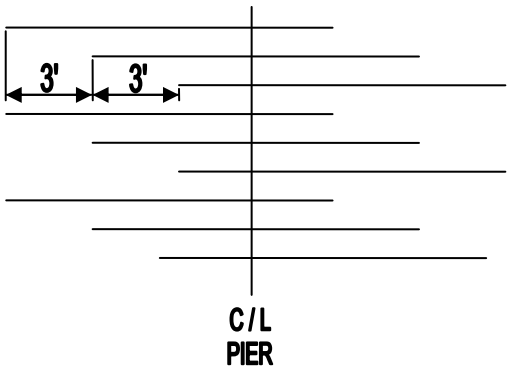

With cantilever beam design, bars should be approximately twice the length of the cantilever.

With continuous beam design, the bar length should be according to AASHTO LRFD 5.11.1.2.3.

7.02.20 A. (continued)

Negative moment reinforcement on 6" decks shall be limited to #6 maximum bar size. The #3 bar longitudinal reinforcement shall be considered in available area for negative moment slab reinforcement. If needed the #3 longitudinal reinforcement in the negative moment region can be replaced with larger bars and combined with added negative moment reinforcement. (2009)

B. Bar Spacing (8-20-2009)

See AASHTO LRFD 5.14.4 and 9.7 and Bridge Design Guide 6.41.01.

C. Bar Laps

See Bridge Design Guide 7.14.02A.

Transverse slab reinforcement, if possible, is to be lapped as follows: top steel between the beams and bottom steel over the beams.

D. Cover

All decks will provide 3" of clear concrete cover to the top of transverse reinforcement. See Bridge Design Guide 6.41.01. (5-6-99)

E. Placing of Transverse Bars

Transverse bars are generally placed perpendicular to the beams; however, where the angle of crossing is 70º or greater, transverse bars may be placed parallel to the reference lines if "S along the skew" falls in the same beam spacing range as "S normal to the beams" or the next larger range (see Bridge Design Guide 6.41.01).

Dimensioning is to be perpendicular to reference lines when the transverse bars are laid parallel to the reference line.

F. Epoxy-Coated Reinforcement

All bars in the superstructure are to be epoxy coated.

7.03.12 (continued)

Mechanically Stabilized Earth (MSE) Wall Requirements

C. Bridge Abutments at MSE Walls

1. Pile supported abutments are required in most cases.

   a. Maximize pile spacing to reduce interference with soil reinforcement.
   b. Incorporate/consider pile bending in design (loose soil vs. stiff soil).
   c. Use pile liner to eliminate downdrag between MSE wall backfill and abutment pile.

2. Spread footings may be allowed if either of the following conditions are met:

   a. The MSE wall is on bedrock.
   b. The bridge is single-span, not constructed part-width, and spread footings are recommended by the geotechnical unit.

3. Embed footings 1'-6" below the top of coping to allow a minimum of 6" clearance above the top of soil reinforcement. Four foot (4') minimum embedment is decreased due to free draining ability of Backfill, Select material required behind MSE walls.

4. The use of 5' sliding slab abutments (BDG 6.20.03A) and integral/semi-integral abutments with a sleeper slab closer than 20' to the abutment (BDG 6.20.04 series) is allowed with a 27' concrete approach pavement as detailed on Standard Plan R - 43&45 - Series located on the road approach side of the sleeper slab.

7.03.12 (continued)

D. Abutment Footing Clearances and Setbacks

1. The edge of pile supported footings shall be located with a minimum clearance of 2 feet from the back face of the MSE facing panels.

2. The edge of spread footings shall be located with a minimum clearance of 5 feet from the back face of the MSE facing panels.

3. The centerline of the front row of piles shall be setback 4.5 feet from the back face of the MSE facing panels.

E. Soil reinforcement length requirements

1. Soil reinforcement length is determined by design, but shall not be less than 0.7 times the wall height (H), or 8 feet whichever is greater.

2. The wall height (H) is to be measured from the proposed finished grade where it intersects the back of the wall face, to the top of the leveling pad.

3. For walls supporting a sloping surcharge, the value H1 shall be substituted for H in the above minimum requirements, where
   $H1 = H + (\tan \beta \times 0.3H)/(1-0.3\tan \beta)$
   β = angle of backslope

4. For walls with abutments within 0.5 times the wall height, the height (H') of wall shall be measured from finished roadway surface to the top of the leveling pad. The value H' shall be substituted for H in the above minimum requirements.
   (12-22-2011)

5. For any section of MSE wall, the soil reinforcement will be the same length from top to bottom.

6. Attaching soil reinforcement to substructure as a means to provide horizontal resistance/anchorage is not allowed.

7.03.12 (continued)

Mechanically Stabilized Earth (MSE) Wall Requirements

C. Bridge Abutments at MSE Walls

1. Pile supported abutments are required in most cases.

   a. Maximize pile spacing to reduce interference with soil reinforcement.
   b. Incorporate/consider pile bending in design (loose soil vs. stiff soil).
   c. Use pile liner to eliminate downdrag between MSE wall backfill and abutment pile.

2. Spread footings may be allowed if either of the following conditions are met:

   a. The MSE wall is on bedrock.
   b. The bridge is single-span, not constructed part-width, and spread footings are recommended by the Geotechnical Section.

3. Embed footings 1'-6" below the top of coping to allow a minimum of 6" clearance above the top of soil reinforcement. Four foot (4') minimum embedment is decreased due to free draining ability of Backfill, Select material required behind MSE walls.

4. The use of 5' sliding slab abutments (BDG 6.20.03A) and integral/semi-integral abutments with a sleeper slab closer than 20' to the abutment (BDG 6.20.04 series) is allowed with a 27' concrete approach pavement as detailed on Standard Plan R - 43&45 - Series located on the road approach side of the sleeper slab.

7.03.12 (continued)

D. Abutment Footing Clearances and Setbacks

1. The edge of pile supported footings shall be located with a minimum clearance of 2 feet from the back face of the MSE facing panels.

2. The edge of spread footings shall be located with a minimum clearance of 5 feet from the back face of the MSE facing panels.

3. The centerline of the front row of piles shall be setback 4.5 feet from the back face of the MSE facing panels.

E. Soil reinforcement length requirements

1. Soil reinforcement length is determined by design, but shall not be less than 0.7 times the wall height (H), or 8 feet whichever is greater.

2. The wall height (H) is to be measured from the proposed finished grade where it intersects the back of the wall face, to the top of the leveling pad.

3. For walls supporting a sloping surcharge, the value H1 shall be substituted for H in the above minimum requirements, where
   $H1 = H + (\tan \beta \times 0.3H)/(1-0.3\tan \beta)$
   β = angle of backslope

4. For walls with abutments within 0.5 times the wall height, the height (H') of wall shall be measured from finished roadway surface to the top of the leveling pad. The value H' shall be substituted for H in the above minimum requirements.
   (12-22-2011)

5. For any section of MSE wall, the soil reinforcement will be the same length from top to bottom.
6. Attaching soil reinforcement to substructure as a means to provide horizontal resistance/anchorage is not allowed.

DRAWN BY: BLT CHECKED BY: VZ APPROVED BY: DAJ	MICHIGAN DEPARTMENT OF TRANSPORTATION BUREAU OF HIGHWAY DEVELOPMENT BRIDGE RAMP AND U-TURN CROSS SECTIONS	ISSUED: 12/22/11 SUPERSEDES: 02/14/11

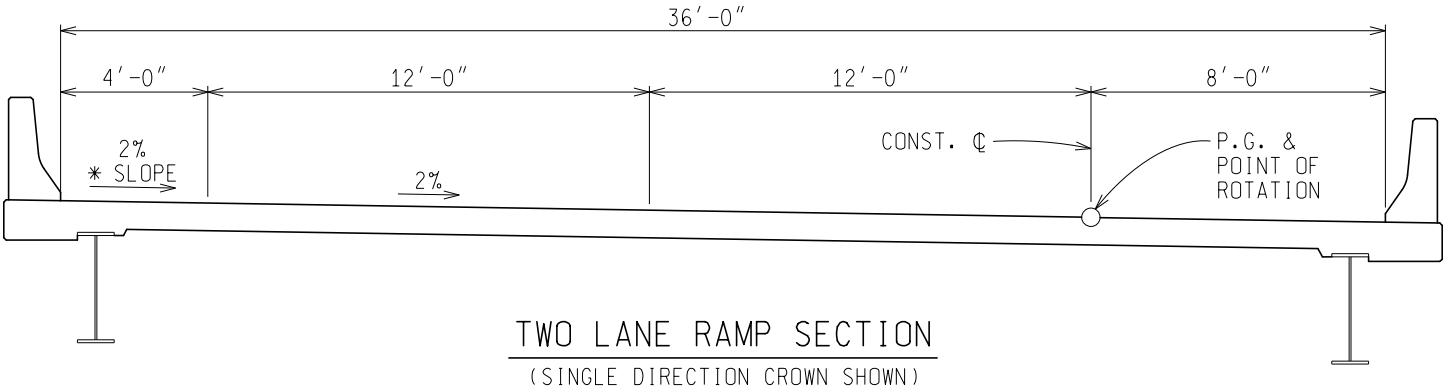

TWO LANE RAMP SECTION

(SINGLE DIRECTION CROWN SHOWN)

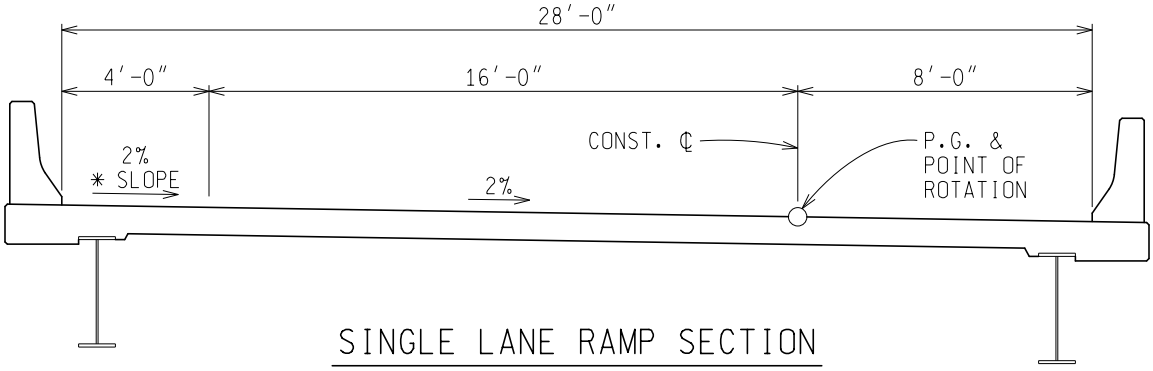

SINGLE LANE RAMP SECTION

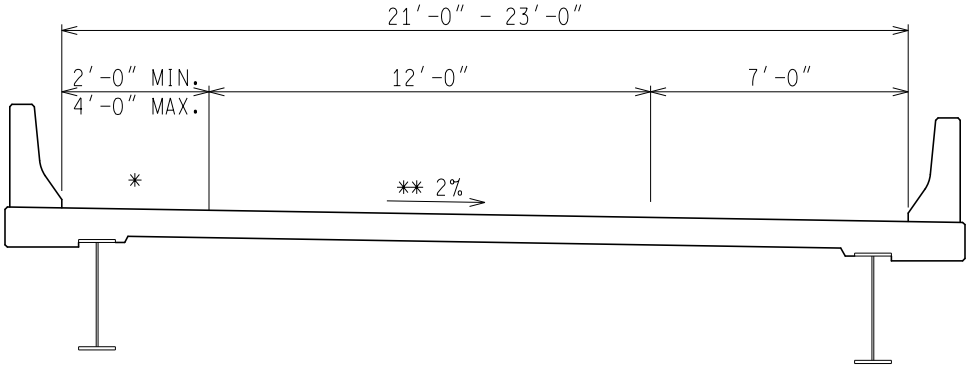

SINGLE LANE SLIP RAMP SECTION

(A SLIP RAMP IS AN ANGULAR CONNECTION BETWEEN AN EXPRESSWAY AND A PARALLEL FRONTAGE ROAD)

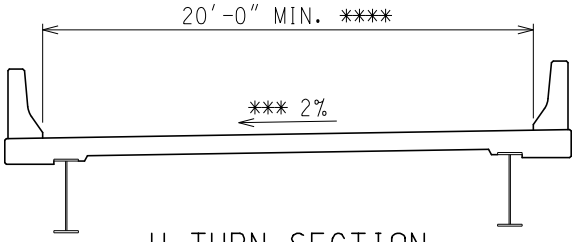

U-TURN SECTION

NOTES:

* TRANSITION SHOULDER SLOPE ON APPROACH TO MATCH APPROACH ROAD SHOULDER SLOPE.

* MATCH BRIDGE SHOULDER SLOPE AND DIRECTION WITH ADJACENT THRU LANE.

** USE 2% FOR 4R PROJECTS. MAINTAIN CURRENT SLOPE AND SECTION FOR 3R PROJECTS.

*** SLOPE STRUCTURE IN DIRECTION OF CURVE.

**** SEE GEOMETRIC DESIGN GUIDES VII-400 SERIES

PREPARED BY DESIGN DIVISION	6.05.03

DRAWN BY: BLT CHECKED BY: VZ APPROVED BY: DAJ	MICHIGAN DEPARTMENT OF TRANSPORTATION BUREAU OF HIGHWAY DEVELOPMENT EXPANSION JOINT COVER RETROFIT	ISSUED: 12/22/11 SUPERSEDES: 02/14/11

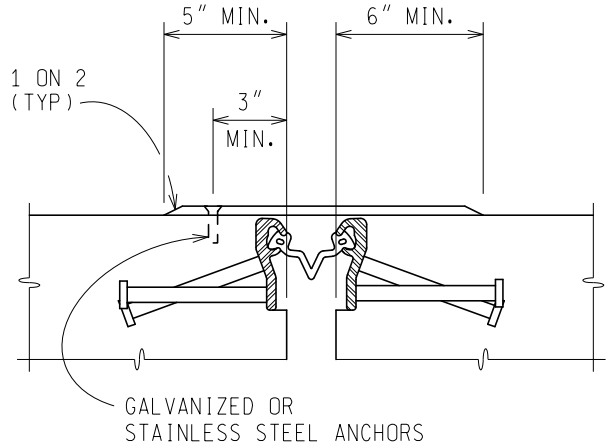

SECTION THROUGH EXPANSION JOINT
(DEVICE TYPE VARIES)

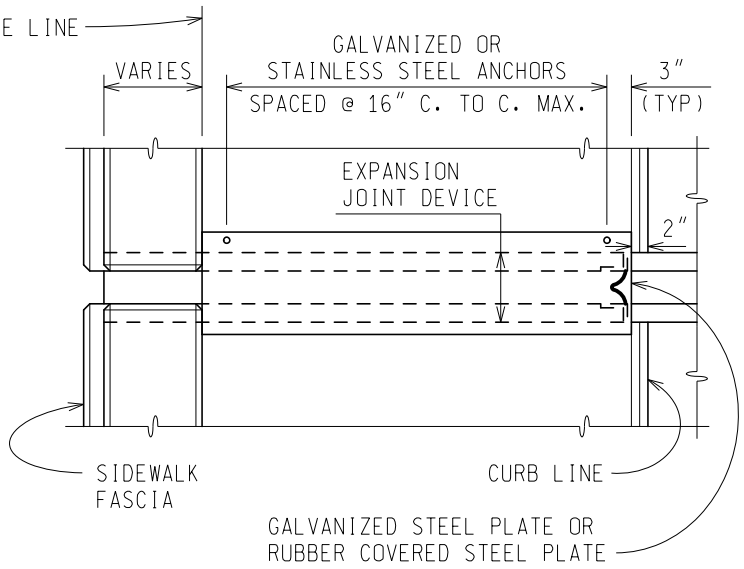

PLAN VIEW

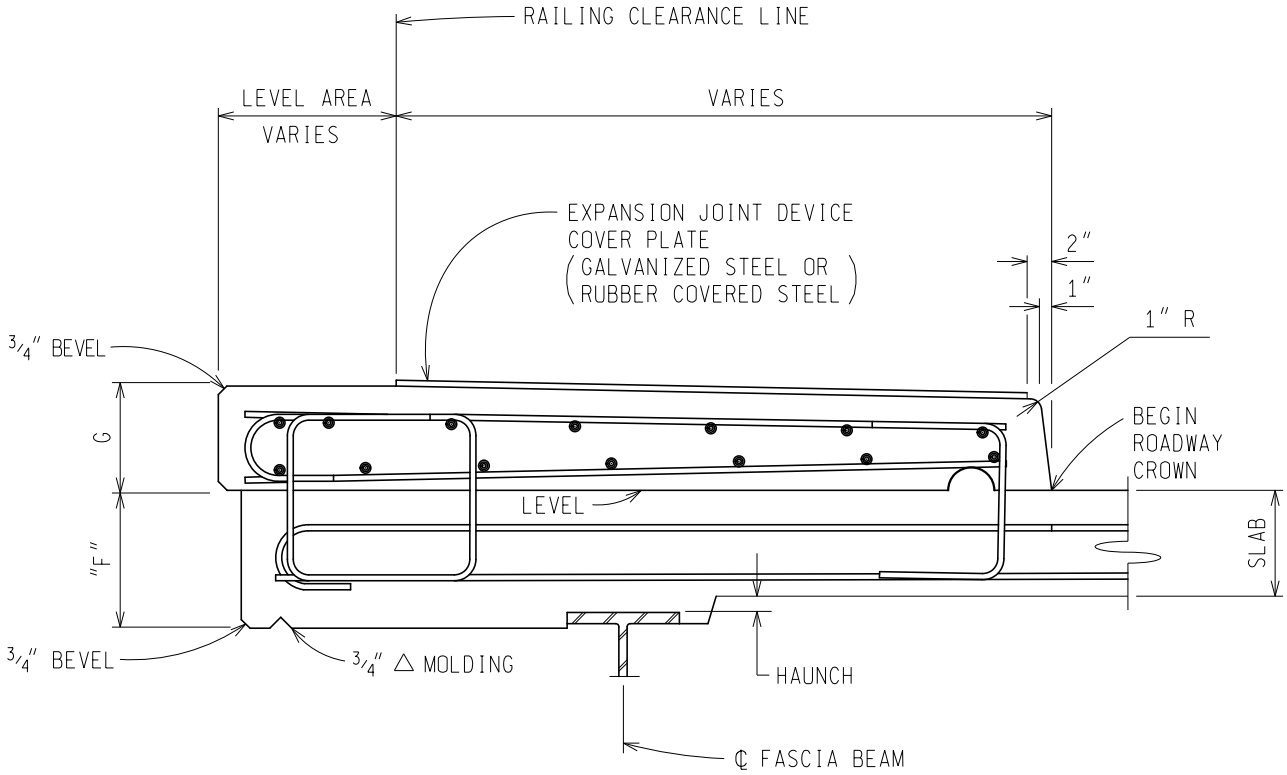

PLAN NOTES:

INSTALL PLATES SO THAT THE ANCHORS ARE SET ON THE HIGH SIDE OF LONGITUDINAL SIDEWALK GRADE.

CLEAN EXPOSED ELASTOMERIC COVER SYSTEM SURFACES WITH A CLEANER AS RECOMMENDED BY THE MANUFACTURE. REPAIR DAMAGE TO GALVANIZED SURFACES ACCORDING TO SECTION 7.16 OF THE STANDARD SPECIFICATIONS FOR CONSTRUCTION.

SPACE ANCHORS TO AVOID CONDUITS, CLAY TILE VOIDS OR OTHER OBJECTS IN SIDEWALKS.

NOTES:

PROVIDE GALVANIZED STEEL PLATES (MINIMUM THICKNESS OF 3/8″) OR RUBBER COVERED STEEL PLATES (MINIMUM THICKNESS OF 3/16″ AND BLAST CLEANED).

PROVIDE STAINLESS STEEL OR GALVANIZED CONCRETE ANCHORS WITH A MINIMUM DIAMETER OF 3/8″.

PREPARED BY DESIGN DIVISION	6.28.06

DRAWN BY: BLT CHECKED BY: VZ APPROVED BY: DAJ	MICHIGAN DEPARTMENT OF TRANSPORTATION BUREAU OF HIGHWAY DEVELOPMENT BRIDGE RAILING, AESTHETIC PARAPET TUBE END WALL SECTIONS	ISSUED: 12/22/11 SUPERSEDES: 05/04/06

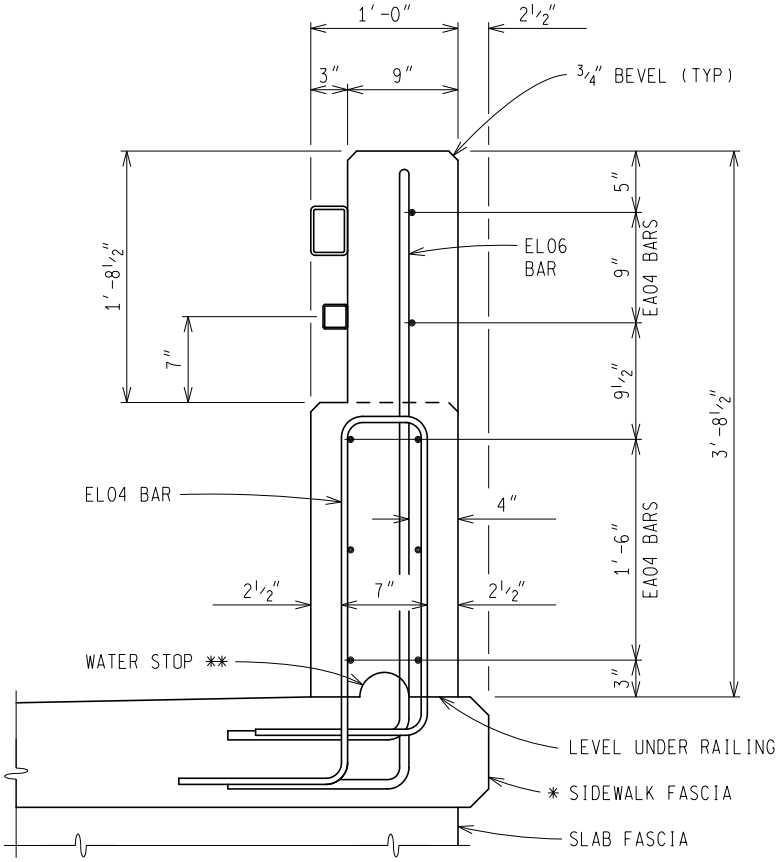

SECTION AT END WALL

(TUBE CONNECTION AREA)

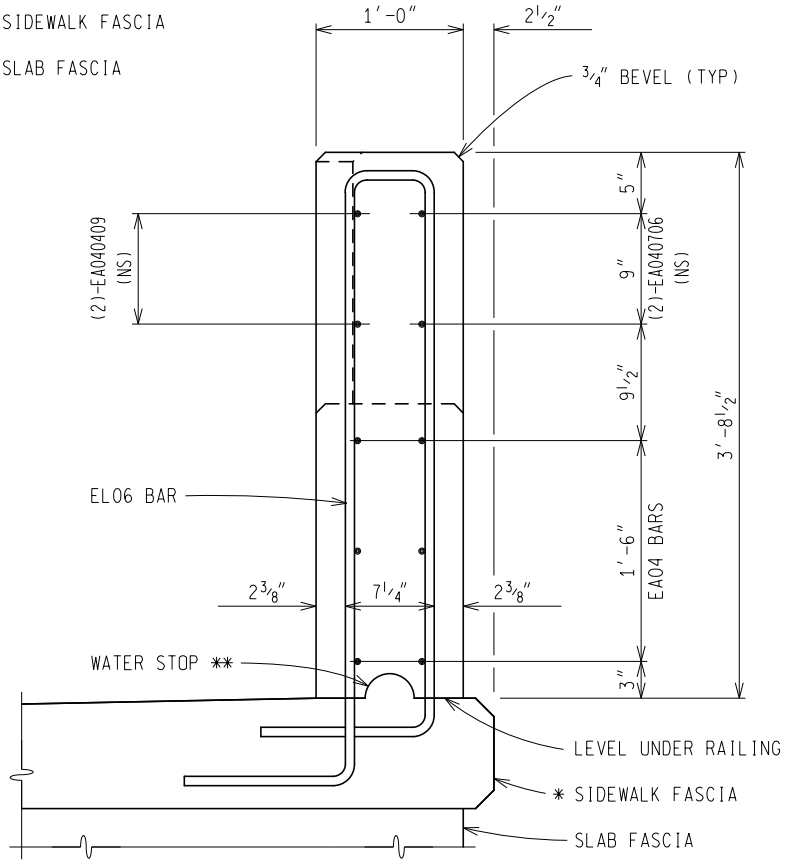

SECTION AT END WALL

(FULL CONCRETE AREA)

NOTE:

* IF BRIDGE RAILING IS MOUNTED FLUSH TO THE SLAB, THE "EL" BARS SHALL BE CAST IN THE SLAB.

** 2" HIGH x 4" LONG (±). FORMING NOT REQUIRED.

PREPARED BY DESIGN DIVISION	6.29.10B

DRAWN BY: BLT CHECKED BY: VZ APPROVED BY: DAJ	MICHIGAN DEPARTMENT OF TRANSPORTATION BUREAU OF HIGHWAY DEVELOPMENT SLAB HAUNCH AND REINFORCEMENT COVER	ISSUED: 12/22/11 SUPERSEDES: 11/27/01

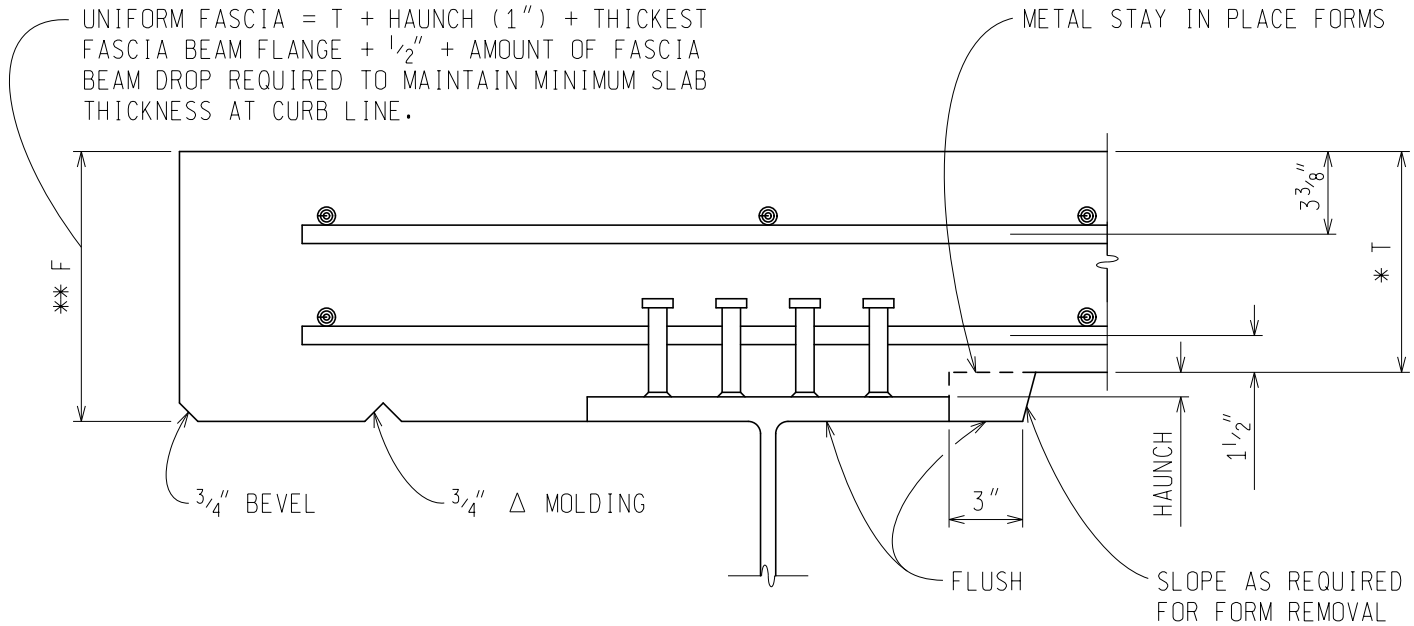

FASCIA INTERIOR

STEEL BEAM AND GIRDERS

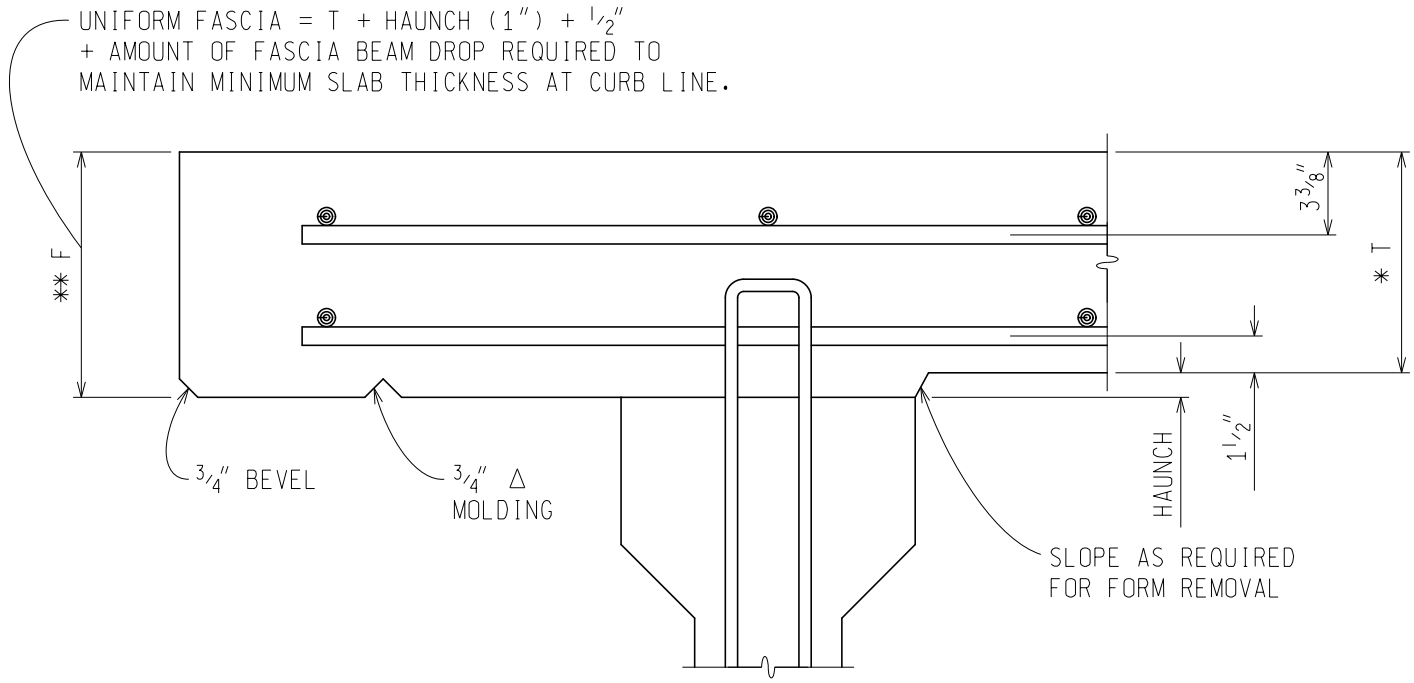

FASCIA INTERIOR

PRESTRESSED CONCRETE I BEAMS

* SLAB THICKNESS "T" AS GIVEN ON GUIDE 6.41.01

** IF "F" BECOMES GREATER THAN 12" USE A HAUNCH DETAIL ON THE FASCIA SIDE OF THE BEAM SIMILAR TO THE HAUNCH DETAIL ON THE INTERIOR SIDE. ADDITIONAL REINFORCEMENT MAY BE REQUIRED IN THE AREA OVER THE BEAM FLANGE IF THE HAUNCH BECOMES EXCESSIVE.

PREPARED BY DESIGN DIVISION	6.42.03