Road & Bridge Design Publications

Monthly Update - November 2011

Revisions for the month of **November** are listed and displayed below. New special details are to be included in projects submitted for the **February** letting as is stated on the special detail index sheets. Please contact Wayne Pikka (pikkaw@michigan.gov) for any questions related to the road changes and Vladimir Zokvic (zokvicv@michigan.gov) for questions related to the bridge changes.

Note: Previous changes to the manuals and guides announced through the "monthly updates" have been considered "interim" updates until a formal (hard copy) distribution has occurred. Since these hard copy distributions have ended, the prior changes have been incorporated into the Road Design Manual (Chapters One through Six) and the Bridge Design Manual (Chapters 7 & 8, LFD & LRFD) with this month's updates. The remainder of the changes to these manuals and to the Bridge Design Guides should be incorporated in the next month.

Special Details

R-45-I: Pavement Reinforcement for Bridge Approach: On sheet one, the size of the top reinforcing bars was reduced. The reinforcement spacing increased, except for the bottom longitudinal bars. The distance from the reinforcement to both the load transfer assembly and the edge of slab was decreased. A steel reinforcement chart replaced slab width and steel reinforcement data in note form. Details for expansion and contraction joints were eliminated in favor of a detail "A", now located on sheet two. A note was added in regards to skewed bridges. On sheet two, a sketch employing a sleeper slab was created to detail pavement and shoulder slabs adjacent to structures.

Road Design Manual

In several chapters, MDOT Division, Section, & Unit name changes were made. Similar changes also occurred with the titles of the DNR/DEQ.

1.02.05C: Notes Applying to Standard Plans: The reference to Road and Bridge Standard Plans being published in a loose leaf binder was removed, as hard copies of revised standards and manuals are no longer published.

1.02.19: Special Details: A minor clarification was made on the location of current special detail files.

2.02.01: Grades: Minor wording changes were made to conform to the changes made in section 3.03.02D.

Road & Bridge Design Publications

Monthly Update - November 2011

2.04.02D: Embankment, Topsoil Surface: The pay items for "Topsoil Surface" were revised slightly to match the 2012 Standard Specifications for Construction.

2.05.02C: Construction Related Activity: Gravel access approach (E&S-4) was revised to (E&S-14) to match the 2012 Standard Specifications for Construction.

3.03.02D: Drainage: The section was revised to eliminate design exceptions for drainage (in regards to grade & vertical curves) and to specify when additional drainage treatments are necessary.

6.02.11: Calcium Chloride Pay Item: The title of the section was revised to "Dust Palliative Pay Item" to accurately reflect the proper pay item.

6.03.04B16: Scratch Coat: HMA, 13A was revised to HMA, LVSP, as Marshall Mixes are no longer specified.

6.03.05D: Adjusting Water Shutoffs and Gate Boxes: The pay items "Water Shutoff, Adj" and "Gate Box, Adj" were modified to add the term "Case __", to match the 2012 Standard Specifications for Construction. Explanations for Case 1 & Case 2 were added.

6.03.16C: HMA Curb, Pay Items: The pay item for "HMA Curb" was revised to "Curb Sloped, HMA" and "Curb Vertical, HMA", to match the 2012 Standard Specifications for Construction.

6.04.07A: Plain Concrete Pavement, Guidelines for Use: Revised the list of locations where plain concrete pavements are not typically used to bridge approach slabs and where specifically recommended for isolated special situations.

6.04.07B: Plain Concrete Pavement, Joint Type & Spacing: References to a deleted section (6.04.04C) were removed.

Bridge Design Manual

7.01.09 (LFD & LRFD): Updated longitudinal deck grades criteria as they relate to bridge decks. Desired grade is 0.5% with a minimum of 0.3%. Special accommodations are to be made when the grade is less than 0.3%.

7.02.24 B.1. (LFD & LRFD): Deleted the use of cold applied joint sealant at sawed joints.

7.03.12 C.4. (LFD & LRFD): Revised the 27' concrete approach pavement to 20' to match Standard Plan R-43-series & R-45-series.

Road & Bridge Design Publications

Monthly Update - November 2011

8.02 A.2. & 8.05 A.2. (LRFD only): Updated pedestrian load to 90 psf per AASHTO Guide Specs for Design of Pedestrian Bridges

8.07.01 W. (LFD & LRFD): Deleted the use of cold applied joint sealant at sawed joints.

Bridge Design Guides

5.21.01: Better defined and detailed the pier nosing 3” x 8” anchor bar.

6.20.04 C: Updated the sleeper slab approach pavement depth. Depth is always 12” to correspond to Standard Plan R-45-Series.

Please note: Corresponding updates to automated tools, including but not limited to the MDOT Bulletin Board, MDOT Cell Library, Bridge Auto Draw Program, etc., may be required in tandem with some of this month's updates. Until such updates to automated tools can be made, it is the designer's/detailer's responsibility to manually incorporate any necessary revisions to notes and plan details to reflect these revisions.

Index to Special Details

11-28-2011

⑥

SPECIAL DETAIL NUMBER	NUMBER OF SHEETS	TITLE	CURRENT DATE
21	2	GUARDRAIL AT INTERSECTIONS	5-24-01
24	5	GUARDRAIL ANCHORED IN BACK SLOPE TYPES 4B & 4T	7-22-02
R-29-H	4	DRIVEWAY OPENINGS & APPROACHES, AND CONCRETE SIDEWALK	10-20-11
R-42-F	6	TYPICAL JOINT LAYOUTS FOR CONCRETE PAVEMENT	12-6-10
R-43-I	2	LOCATION OF TRANSVERSE JOINTS IN PLAIN CONCRETE PAVEMENT	12-2-10
* R-45-I	2	PAVEMENT REINFORCEMENT FOR BRIDGE APPROACH	11-9-11
R-99-B	2	CHAIN LINK FENCE WITH WIRE ROPE	11-1-00
R-100-G	4	SEEDING AND TREE PLANTING	9-8-11

*** Denotes New or Revised Special Detail to be included in projects for (beginning with) the February letting.**

Note: Former Standard Plans IV-87, IV-89, IV-90, and IV-91 Series, used for building cast-in-place concrete head walls for elliptical and circular pipe culverts, are now being replaced with plans that detail each specific size. The Municipal Utilities Unit will provide these full sized special details for inclusion in construction plans for MDOT jobs. To assure prompt delivery, requests ***must*** be made in advance.

Former Standard Plans IV-93 and IV-94 series have been replaced with precast concrete box & three-sided culverts as per the 2012 Standard Specifications for Construction.

Index to Bridge Detail Sheets

11-28-2011

⑦

DETAIL NUMBER	NUMBER OF SHEETS	TITLE	CURRENT DATE
B-21-I	4	BRIDGE RAILING, 2 TUBE	6-3-11
B-23-E	4	BRIDGE RAILING, THRIE BEAM RETROFIT	10-19-09
B-25-G	6	BRIDGE RAILING, AESTHETIC PARAPET TUBE	7-7-11
EJ3Z	1 or 2	EXPANSION JOINT DETAILS	6-8-11
EJ4M	1 or 2	EXPANSION JOINT DETAILS	6-8-11
PC-2G	1	70" PRESTRESSED CONCRETE I-BEAM DETAILS	3-31-06
PC-4E	1	PRESTRESSED CONCRETE 1800 BEAM DETAILS	3-31-06
PC-1L	1	PRESTRESSED CONCRETE I-BEAM DETAILS	7-12-06

*** Denotes New or Revised Special Detail to be included in projects for (beginning with) the February letting.**

Note: Details EJ3Z & EJ4M are interactive, i.e. designers and detailers choose details based upon railing type and angle of crossing. Place all details appropriate for the project, structure specific information, and the Expansion Joint Device quantity on the sheet. The sheet shall then be added to the plans as a normal plan sheet.

Detail PC-1L, PC-2G and PC-4E shall have structure specific information and quantities added to the sheet. The sheet shall then be added to the plans as a normal plan sheet.

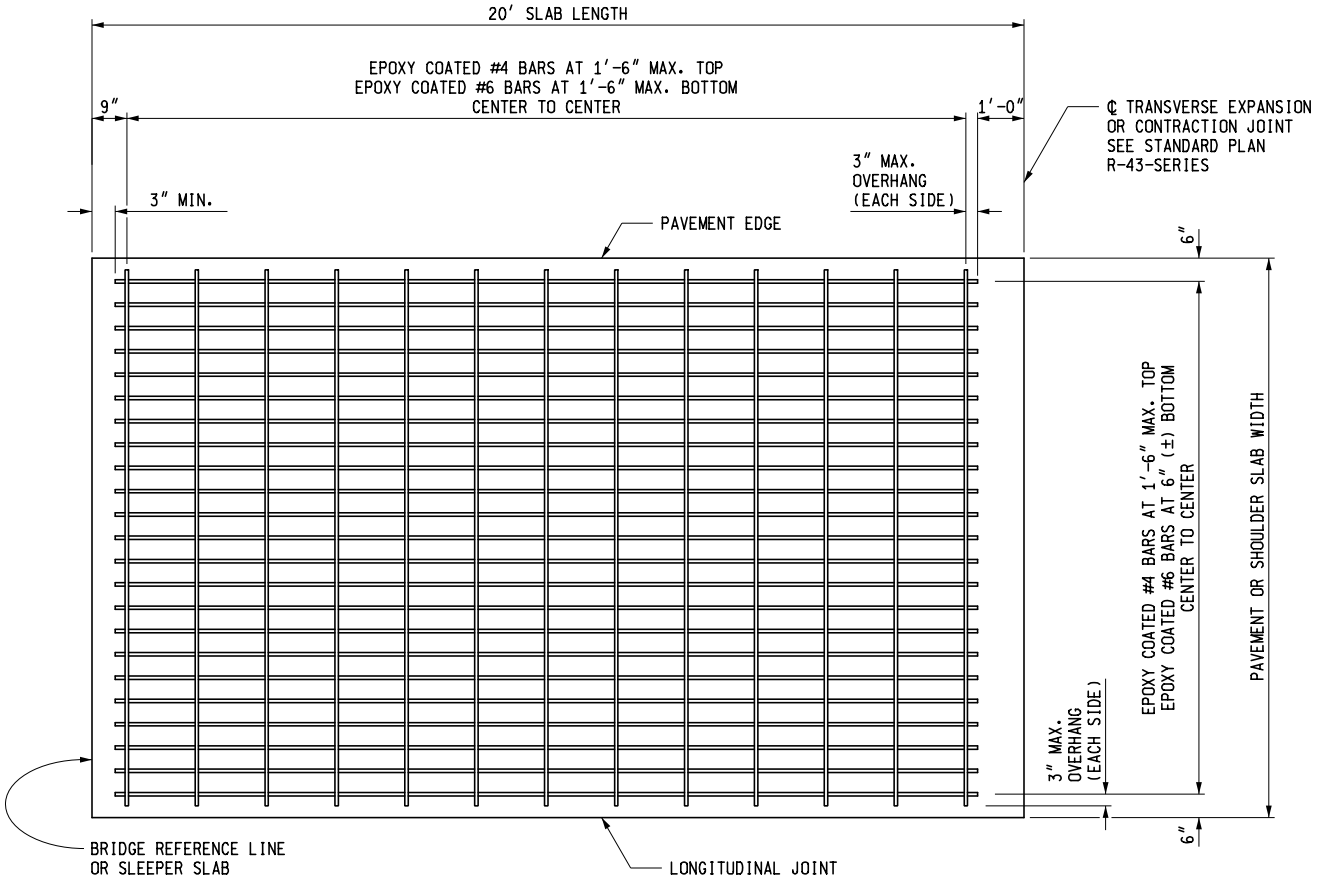

SKEWED BRIDGES WHERE SLAB IS SQUARED OFF WILL REQUIRE TRANSVERSE REINFORCEMENT TO BE FANNED IN OR THE USE OF CUT BARS WILL BE REQUIRED. MAINTAIN REINFORCEMENT SPACING AT ACUTE CORNER AND FAN IN AT OBTUSE CORNER.

REINFORCEMENT DETAIL

STEEL REINFORCEMENT		
LONGITUDINAL REINFORCEMENT		
PAVEMENT/SHOULDER SLAB WIDTH	TOP REINFORCEMENT #4 BARS AT 1′-6″ MAX.	BOTTOM REINFORCEMENT #6 BARS AT 6″ (±)
	NUMBER OF BARS (MIN.)	NUMBER OF BARS (MIN.)
10′-0″	7	19
11′-0″	8	21
12′-0″	9	23
14′-0″	10	27
3′-0″	3	5
4′-0″	3	7
5′-0″	4	9
7′-0″	5	13
9′-0″	7	17
TRANSVERSE REINFORCEMENT		
	TOP REINFORCEMENT #4 BARS AT 1′-6″ MAX.	BOTTOM REINFORCEMENT #6 BARS AT 1′-6″ MAX.

MDOT Michigan Department of Transportation

PREPARED BY DESIGN DIVISION

DRAWN BY: B.L.T.

CHECKED BY: W.K.P.

DEPARTMENT DIRECTOR
Kirk T. Steudle

APPROVED BY: _____
DIRECTOR, BUREAU OF FIELD SERVICES

APPROVED BY: _____
DIRECTOR, BUREAU OF HIGHWAY DEVELOPMENT

MICHIGAN DEPARTMENT OF TRANSPORTATION
BUREAU OF HIGHWAY DEVELOPMENT STANDARD PLAN FOR

PAVEMENT REINFORCEMENT FOR BRIDGE APPROACH

F.H.W.A. APPROVAL	11-9-2011 PLAN DATE	R-45-I	SHEET 1 OF 2

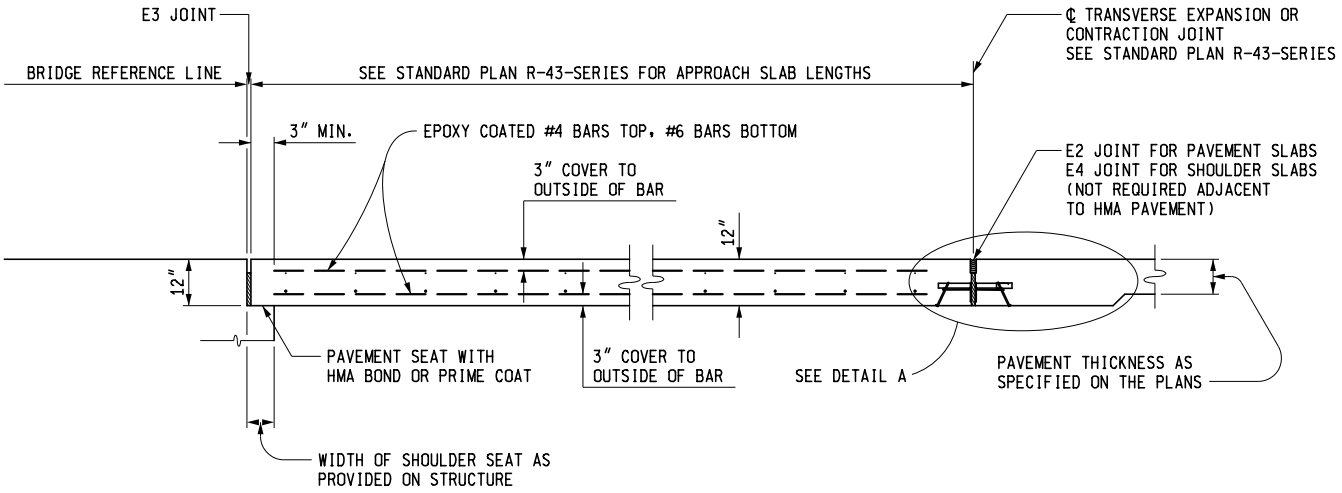

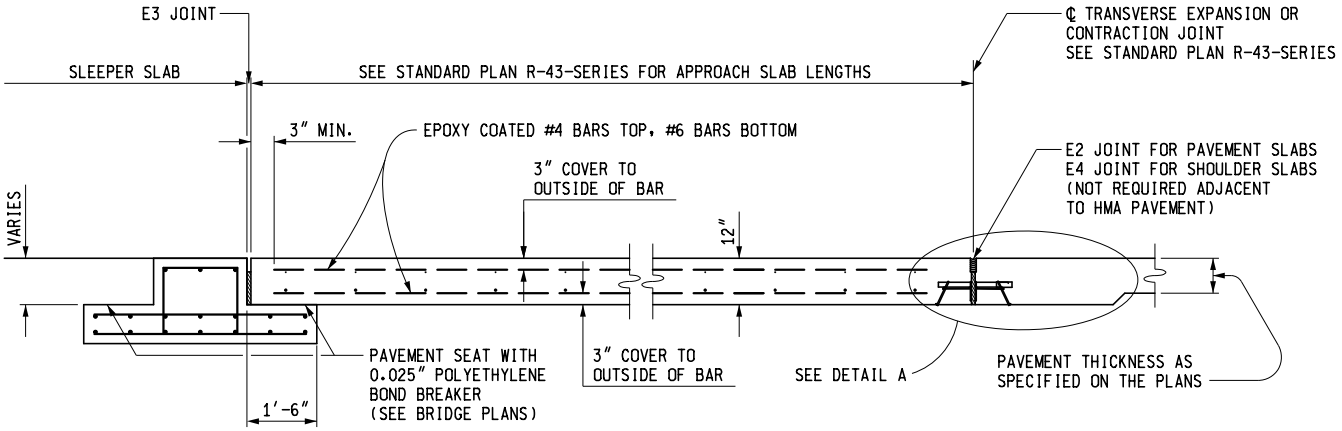

PAVEMENT AND SHOULDER SLABS ADJACENT TO STRUCTURES

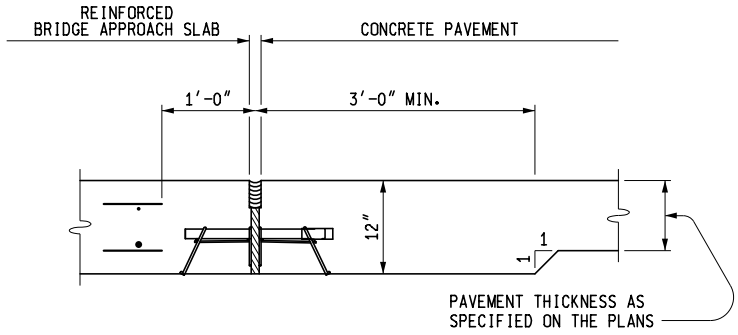

DETAIL A

NOTES:

SEE STANDARD PLANS R-39-SERIES AND R-40-SERIES FOR DETAILS OF JOINTS AND LOAD TRANSFER ASSEMBLIES.

MICHIGAN DEPARTMENT OF TRANSPORTATION
BUREAU OF HIGHWAY DEVELOPMENT STANDARD PLAN FOR

PAVEMENT REINFORCEMENT FOR BRIDGE APPROACH

F.H.W.A. APPROVAL	11-9-2011 PLAN DATE	R-45-I	SHEET 2 OF 2

1.02.05 (revised 11-28-2011)

Note Sheet

The purpose of the note sheet is to show, in a convenient location, the General Plan Notes, Utilities, Notes Applying to Standard Plans, and Miscellaneous Estimates.

Information on the note sheet should be project specific, current, and complete.

A. General Plan Notes

A current listing of the general plan notes is on the workstation. Include on the note sheet only the general plan notes that are applicable to the project. Customized notes should be clearly and concisely written to describe any special items or treatments on the project that are not addressed by the general plan notes.

B. Utilities

The preliminary utility list should be prefaced with and followed by the standard notes that best fit the project.

The preliminary utilities list should be from: a current survey, old plans, or the information retrieval system. It should be updated to the current date. Utility information can also be obtained from the field review section, the utility section, or the Region/TSC Utility/Permit Engineer. The final utility list shall be from the Region/TSC Utility/Permit Engineer.

The list should include the name and address of the utility, the type of utility, and a contact person, listing a phone number and address if available.

C. Notes Applying to Standard Plans

Current standard plans and special details that are applicable to the project are listed on the note sheet. Special details called for on the note sheet must also be physically attached to the construction plans. See Section 1.03.01 for the order of plan sheets.

1.02.05C (continued)

Standard plans are engineering drawings showing standard details of various construction items which present the current policies of MDOT and are approved for repetitive use. The Department's Road and Bridge Standard Plans are produced in the Standards Unit of the Quality Assurance Section of the Design Division. In order for these drawings to become Standard Plans, they must first be approved by MDOT Administrators and have FHWA approval. The approved drawings are then made available on the MDOT Web site.

During the time these plans are being processed for approval, they are often included in the construction plans as special details. Even though these plans are labeled "Standard Plan" in the title block, they are still considered special details when included in the construction plans. Do not change the “standard plan” label to “special detail” or remove the plan number and/or plan date on these plans. Special details are also available on the MDOT Web site.

Occasionally, a special detail may need to be modified to address a special item or treatment on a project. Once the design unit alters the drawing in any way, it is no longer a special detail and **cannot** be listed on the note sheet and placed in the construction plans with the other special details. The “standard plan” label, plan number, and date must either be crossed out or removed from the drawing to let others know that changes were made. The revised drawing is placed in the construction plans with the miscellaneous detail sheets. See Section 1.03.01 for the order of plan sheets.

1.02.18 (revised 11-28-2011)

Miscellaneous Plans

Occasionally, a project may require traffic signal plans, municipal utility plans, wetland mitigation plans or other miscellaneous plan sheets. Traffic signal plans are prepared by the Traffic and Safety Division. Municipal utility plans, such as water mains, street lighting, sanitary sewers, etc. would be prepared by or coordinated through the Utility Section of the Design Division. Wetland mitigation plans are coordinated with the Roadside Development Unit of the Design Division.

1.02.19 (revised 11-28-2011)

Special Details

Special Detail plan sheets are used to show project specific items and details not covered by the standard plans. They are located in a folder in ProjectWise for MDOT internal access. These details are typically draft versions of new or revised standard plans awaiting final approval. These special detail sheets should be included in the final set of construction plans.

Modified Special Detail sheets may also be prepared by the designer to show other necessary details not covered by a standard plan or special detail provided by the Standards Unit. These may include gore details, guardrail installations, surfacing details and transitions, modifications of standard items, drainage details and so forth. See Section 1.02.05C for more information.

1.02.20 (revised 11-28-2011)

Critical Path Method (CPM)

Critical Path diagrams indicate construction events, the sequence of each event, the time required to complete each event, and which events become "critical" to the completion of the project. The designer may be asked to complete a critical path diagram for all but the most simplistic projects.

1.02.20 (continued)

Critical path diagrams are not a part of the plans, but are valuable for setting construction completion dates, open to traffic dates and other intermediate dates. Contractors interested in bidding the project can receive the CPM prepared by the designer, but are encouraged to prepare their own critical path diagrams. CPM's should not be given to contractors without a disclaimer worded similar to the following:

B.P.I.A. Company
123 Money Street
Mission Model, MI 48917

Attached is a copy of the critical path and computer printout that you requested for the subject project. The critical path information was used as one of the aids in arriving at the final completion date and/or interim completion dates. It is not officially part of the plans and any errors or omissions will not relieve the contractor from meeting the dates set in the progress schedule in the proposal.

Critical paths are very important for high impact and expedited projects. The CPM will show which items or events need to be expedited to complete the project. Early and late start and finish dates, seasonal limitations, holiday and special event shutdowns, and ordering and delivery of materials all enter into the formulation of the path.

When preparing the CPM, it is important to consider the length of the work week. With weather being a consideration, a four-day work week can be used on normal projects. On expedited projects, however, a five or even six-day work week may be appropriate.

Information on times for construction events, sequences, etc. is available from Construction Field Services Division. The designer should work closely with Construction Field Services Division and/or the project engineer when preparing the CPM.

2.02.01 (revised 11-28-2011)

Grades

Terrain in Michigan is mostly level with some areas of rolling topography. Therefore, the Designer can usually achieve good vertical alignment, especially on new and reconstruction projects. Grades can be kept relatively flat with long vertical curves for long sight distances. In rolling terrain, more care is needed in establishing the vertical alignment.

Maximum grades depend on the functional classification of the roadway, location (urban or rural), design speed, terrain, and the scope of the construction project. MDOT generally uses a maximum grade of 3% for freeways and major trunklines and 4% for secondary and county roads. Steeper grades within AASHTO limits may be used when warranted.

Minimum grades depend more on drainage than on other factors. Uncurbed roads with ditch drainage can have a level longitudinal grade if the crown adequately drains the pavement. Independent ditches should be used when the grade is less than 0.3%. A desirable minimum is typically 0.5%, but grades of 0.3% may be used for paved roadways. See Section 3.03.02D.

If the grade is very flat, independent gutter grades may be necessary. (See Chapter 6 - Surfacing, Section 6.06 - Curb and Gutter.)

Gradelines for new construction are established by a series of tangents connected at their intersections (P.I.'s). The gradeline may be above or below the existing ground line depending on the type of soil, location of the water table, existing or proposed features such as bridges, crossroads, etc., and many other factors. The Region Soils Engineer can be helpful in establishing a new gradeline.

The series of tangent gradelines are smoothed out and refined by the use of parabolic vertical curves.

2.02.02

Section deleted. Information incorporated into Chapter 3.

2.04.02 (continued)

Embankment

C. Subbase

Subbases are constructed of granular material between the subgrade (constructed of regular embankment) and the pavement structure. The subbase layer provides structural support and good drainage beneath the pavement.

Payment can be either Subbase LM (loose measure) or Subbase CIP (compacted in place).

D. Topsoil Surface

There are two basic topsoil pay items: Topsoil Surface, Furn and Topsoil Surface, Salv.

The Designer should confer with the Region Soils Engineer to get a recommendation for topsoil. Other topsoil resource people are the Region Resource Specialist and the Roadside Development Unit.

Generally the quality of topsoil within the right of way is very poor on existing highways and it should not be recycled as topsoil. Nearly all resurfacing, rubblizing, safety and guardrail upgrading, lane widening as well as other types of upgrading work have unacceptable roadside topsoil for salvaging. On these types of projects Topsoil Surface, Furn should be used. Occasionally some salvaged topsoils may be acceptable but in insufficient quantity.

More than enough good quality salvaged topsoil is usually available on all new construction projects (new highway routes). Use the pay item Topsoil Surface, Salv on such projects. Excess topsoil can be used in fill slopes as shown on the plans or as directed by the Engineer.

2.04.02D (continued)

Topsoil material is spread on exposed slopes that are to be seeded. Topsoil Surface, Furn or Topsoil, Surface, Salv should be estimated at a specific uniform depth but not less than 4". When topsoil is obtained from stockpiled topsoil or from any other source, the topsoil items include loading, hauling and placing the topsoil on site.

E. Adding Embankment to Existing Slopes (Widening Projects)

Widening projects often require placing embankment on an existing slope. If the existing slope is quite high and/or steep (1:6 or steeper), the Contractor must step the existing slope. Refer to Standard Plan R-105-Series.

2.05.02 (continued)

Plan Preparation

C. Construction-Related Activity

Consider all construction-related activity, including equipment staging and material storage areas. Call for gravel access approach (E&S-14) to prevent tracking sediment from the construction site. Aggregate cover (E&S-8) can be considered for stabilizing equipment storage areas and access points.

D. Flow Rates

Design to minimize increases in the volume, velocity, and peak flow rate of stormwater runoff from the site during and after construction in order to protect downstream properties and waterways from erosion. Call for energy dissipators when increased velocity cannot be avoided. Refer to Section 4.03.04 and the Drainage Manual for more information on designing to minimize non-point source pollution.

E. Sediment Traps and Check Dams

The proper placement and spacing of Sediment Traps (E&S-20) and Check Dams (E&S-37) is essential to SESC. This combination of measures is effective where ditch grades change from a steep to flat grade; when the ditch grade varies significantly over a short distance; and just prior to the point at which the ditch outlets to a watercourse or off of the right-of-way. In ditch cuts in sandy soils, the sediment trap/check dam pairs can be spaced further apart provided that the grades are consistent. In clay soils, the placement of these pairs will depend much more on the depth of ditch cut, length of cut and grade. In flat ditch cuts these pairs can be spaced at up to 500-foot intervals and still remain effective; they may however require more frequent sediment removal.

2.05.02 (continued)

F. Temporary Detention

Include plan notes if necessary to require the installation of temporary detention facilities, such as Sediment Basin (E&S-21), Sediment Traps (E&S-20), or Detention Basins, prior to clearing and grading operations. These measures must be sized and located to account for both on-site storm water flow and also sheet flow or additional concentrated flow from off-site. Consider the need for Filter Bag (E&S-18) or Turbidity Curtain (E&S-1) to prevent the loss of sediment when these temporary measures are emptied in preparation for being brought on line for permanent use at the end of the construction project.

G. Dewatering

Dewatering discharges must be controlled to protect downstream properties. When routing non-stormwater discharges the flow rate must be controlled to minimize scouring and flushing of sediment trapped in the system. Call for Filter Bag (E&S-18), Gravel Filter Berm (E&S-13), or Turbidity Curtain (E&S-1) to prevent the loss of sediment during this operation.

H. Soil Stabilization

Select soil stabilization measures to be appropriate for the time of year, site conditions, and estimated duration of use. Include a variety of temporary SESC pay items on the plans for specific locations and provide miscellaneous quantities for use as needed throughout the construction phase. Refer to Section 2.05.05 for a description of the designer's responsibilities regarding turf establishment measures.

3.03.02 (continued)

Vertical Alignment – Design Controls

C. Stopping Sight Distance

Stopping Sight Distance (SSD) is the principal control of the design of both crest and sag vertical curves. AASHTO's ***A Policy on Geometric Design of Highways and Streets*** gives values for K and lengths of vertical curves for various operational conditions. Values based on reduced design speeds may be used on non-freeway 3R projects. Minimum design guidelines for non-freeway 3R projects are presented in Section 3.09.02. The design speed used for a ramp vertical alignment should meet or exceed the design speed used for the ramp horizontal alignment. See MDOT Sight Distance Guidelines for more detailed information on sight distance calculation.

D. Drainage

Minimum grades correlate with adequate drainage. A desirable minimum grade is typically 0.5%, but grades of 0.3% may be used for paved roadways. On curbed roadways, when it is necessary to use grades that are flatter than 0.3%, provide enclosed drainage with compensating decreased inlet spacing. In addition, close attention to inlet spacing is critical for sag and crest vertical curves when the K value (rate of grade change) is greater than 167.

Uncurbed roads with ditch drainage can have a level longitudinal grade if the crown adequately drains the pavement. Independent ditches should be used when the grade is less than 0.3%. However, efforts to achieve minimum roadway grades of 0.5% would be of great benefit in the event that future curb and gutter or concrete barrier may be installed.

3.03.02 (continued)

E. Other Considerations

Comfort criteria is sometimes a consideration for sag vertical curves. The equation for length of curve for comfort is:

$$L = \frac{AV^2}{46.5}$$

WHERE:

L = length of vertical curve, feet
A = algebraic difference of tangent grades, percent
V = design speed, mph

Passing sight distance must be considered on two way roadways. Passing sight distance is the distance required for a motorist to safely perform a passing maneuver as described in AASHTO.

Intersection Sight Distance is the distance that allows drivers sufficient view from a minor road to safely cross or turn on a major road. See Section 3.03.01.D4.

F. Computations

The following pages show mathematical details used in the design of vertical curves. This section includes definitions, formulas, and examples.

6.02.10

Aggregate Approaches

It is the practice of the Department to construct an HMA surface on all existing gravel approaches to the trunkline (see Section 12.02.03). The purpose is primarily to keep loose gravel off the through pavement.

6.02.11 (revised 11-28-2011)

Aggregate Additives

A. General

Calcium chloride and water used to facilitate shaping and compaction are not paid for separately, but are included in other contract items.

B. Dust Palliative Pay Item

Calcium chloride used as a dust palliative, as when maintaining traffic, should be estimated at the rate of 7.5 tons per mile of two-lane width (or two-shoulder width). The pay item is "Dust Palliative, Applied."

6.02.12

Sand Lift (Grade Lift)

Sometimes, rather than surfacing a road surface or removing it for replacement, a sand lift is used above the old pavement. Use of this method of construction has declined as recycling techniques have been improved thereby increasing the value of old pavement surfaces. A sand and gravel cushion of less than 18 inches should not be used, because there is evidence that reflective cracking is not significantly prevented in a flexible pavement. Experience has also shown that when a **gravel** lift is compacted, the percentage of fines increases, resulting in a dense-graded mixture which tends to trap water. An HMA base course should be used instead. An added advantage to using an HMA base course is the ease of maintaining traffic during construction.

When a sand lift is used and a transition is necessary to meet the existing pavement surface, the transition should be as illustrated below.

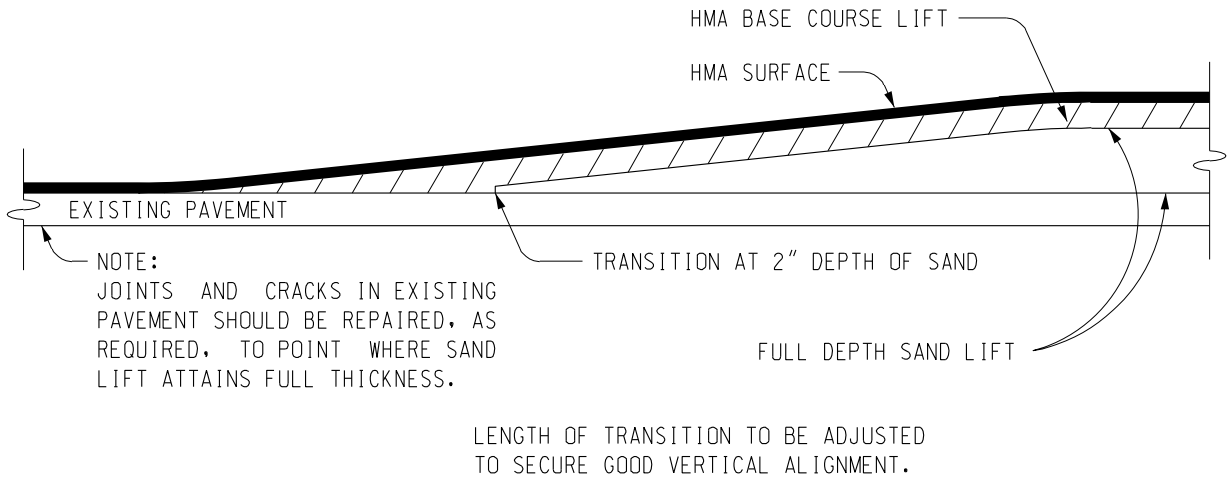

SAND LIFT TRANSITION OVER OLD PAVEMENT

To be used when old pavement is not removed.

Note: Not to be confused with requirements of Standard Plan R-115-Series

6.03.04B (continued)

Surface Preparation

15. Wedging

Wedging is used to build up insufficient areas in the existing surfacing, such as to increase insufficient crown, to increase superelevation, or to level out sags that distort the profile. While the regular HMA surfacing can be thickened to take out up to 1" of sag, wedging, as a separate operation, must be used for thicker modifications.

Wedging shall be 3" or less using the same HMA mix as the top course of the mainline pavement. Additional wedging can be accomplished with variable thickness in the leveling and/or base course.

16. Scratch Coat

An 80 lbs/syd (about ¾" thick) scratch coat is usually required whenever a pavement is cracked and seated, or the existing HMA cap is removed from a composite pavement and the exposed concrete surface has joint and surface deterioration. This is to prevent ravelling of the old concrete under traffic, and possibly a rolling ride when the finished pavement is in place. The material is similar to an HMA leveling course, perhaps modified to use a different size aggregate, computed in addition to the regular rate of resurfacing proposed for the project. If, for some reason, the scratch coat needs to be thicker (as recommended at the Plan Review Meeting) then consideration should be given to reducing the regular leveling course by the additional application rate in excess of the nominal 80 lbs. A scratch coat should be provided on all such applicable projects unless it is specifically deleted at the Plan Review Meeting.

6.03.04B16 (continued)

A scratch coat can also be used to fill longitudinal irregularities such as rutting or faulting between lanes. Scratch coat quantities should be shown separately from the regular resurfacing quantities, and designated as "scratch coat", e.g. HMA, LVSP (Scratch Coat).

6.03.05 (revised 11-28-2011)

Adjusting Drainage Structures and Utilities

It is the practice of the Department to adjust the elevation of manhole and catch basin covers to fit the finished elevation of proposed resurfacing. Designers should therefore provide quantities for this adjustment, but with the knowledge that site by site decisions will be made on construction relative to tapering the surfacing down (or up) to meet the cover at its existing elevation. Depressed covers, e.g., possibly as much as 1" low, can sometimes be tolerated in the gutter, and a manhole cover in the center of a lane that is ½" low may not pose a problem. On the other hand, a cover in the lane wheeltrack that is ½" low will be a constant annoyance to the motorist. Some local agencies, for reasons of economy, will shape the new HMA to fit the existing elevation of the cover even if it is 1½" to 2" low. This practice may be acceptable on low volume, low speed residential streets, but it is not acceptable on a street designated as trunkline.

A. Adjusting Drainage Structure Covers

The item of "adjusting" applies where the elevation of the cover is changed 6" or less. It applies to manhole covers, whether drainage or utility, inlets, and to catch basin covers. While adjustment is usually upward, it can apply where the cover is lowered as well, as might occur in a widening situation.

If the existing structure is in poor condition, it should be reconstructed.

6.03.05C (continued)

Adjusting Drainage Structures and Utilities

The pay item "Dr Structure Cover, Adj, Add Depth" is measured per foot beginning 6" from the level of the existing structure (in the direction of adjustment) to the limit of the additional depth of adjustment. This also requires payment for, "Dr Structure Cover, Adj, Case __.

If a new cover is required in conjunction with an Adjustment it is paid for separately. Also, see ***Standard Specifications for Construction*** for details.

D. Adjusting Water Shutoffs and Gate Boxes

The pay items "Water Shutoff, Adj, Case __" and "Gate Box, Adj, Case __" measured as each, should be set up as applicable. Case 1 refers to structures located in hard surfaced travel areas and unit prices includes saw cutting, removing and replacing existing pavement, curb, or curb and gutter, and adjusting the water shutoff or gate box to final grade. Case 2 refers to structures located outside existing pavement, curb, or curb and gutter and unit prices includes restoring disturbed vegetated or sidewalk areas.

E. Facilities Owned by Private/Public or Municipal Utility

Manholes, shut-off valves, etc. owned by a private/public or municipal utility that require adjustment or reconstruction ***may*** be altered by the facility owner. The facility owner should be contacted to discuss whether they want to adjust the facility or have the MDOT contractor do this work. The designer should coordinated efforts with the Region/TSC utility coordination engineer for contacting the effected utility. If the work will be done by the utility, such structures should be referenced by a note on the plans to the effect that the work will be done by others. The Region/TCS utility coordination engineer should include language regarding this work in the projects utility coordination clause.

6.03.05 (continued)

F. Adjusting and Placing Monument Boxes

Payment for installing or adjusting monument boxes in paved areas will be according to the current specifications for "Monument Box, Adj" or "Monument Box Preservation"

In addition, it is required that all monument boxes be adjusted whether shown or not. To ensure that all government corners are adjusted or preserved, the designer shall place the following note on the plans or in the log of any project that includes section or quarter corners.

> It is the intent that all government corners on this project be preserved and that, where necessary, monument boxes be placed or adjusted whether shown or not.

Monument box castings are furnished by the contractor according to Standard Plan R-11-Series.

If a Design Unit has a resurfacing project to design without benefit of a survey, the Design Engineer should check with the Survey Section to determine if a pickup survey to locate monument boxes could be made within the time available to complete the plans.

Designers may encounter monument boxes in existing pavements at previous survey or construction control points. On a major reconstruction project these monuments probably need not be preserved, whereas on a resurfacing job, a quantity should be set up to adjust or place new boxes. The Lansing Survey Unit should be contacted by the Design Unit whenever these points are encountered on a project.

For additional information concerning monumentation, see Section 5.14.

6.03.15 (continued)

HMA Approaches and Auxiliary Lanes

6. Use High Stress HMA Approach for the circulating lanes and the entry and exit legs of a roundabout to the point where the roadway returns to the normal approach road width.

7. Sand trails, such as are frequently encountered in the northern part of the state, should have minimal HMA approaches. Approach Treatment Detail I is typically used in these areas (see Section 12.02.03).

   See Section 12.02.03 details of approaches.

6.03.16 (revised 11-28-2011)

HMA Curb

A. Guideline for Use

The use of HMA curb on trunkline projects should be restricted to replacement in kind, work of a temporary nature, or for maintenance-type erosion control at the edge of shoulder.

B. Curb Shapes

The ***Standard Specifications for Construction*** indicate that HMA curb shapes will be according to the cross-section shown on the plans. Shown below are four shapes, based on commercially available templates that have been adopted by the Department. The shape to be used must be detailed on the plans or in the proposal.

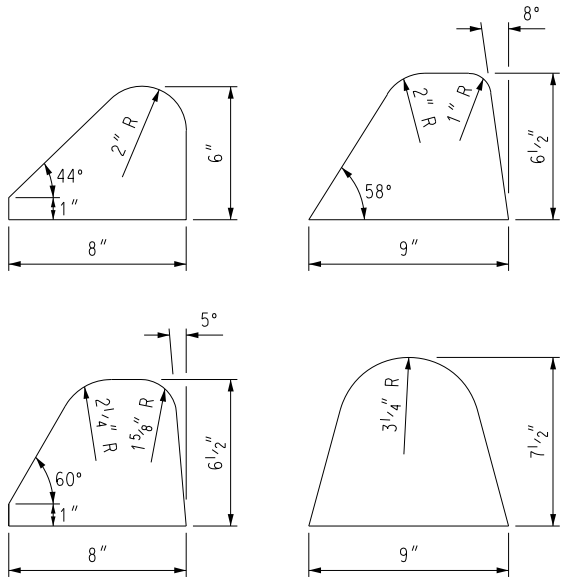

C. Pay Items

Designers are reminded that the pay items are "Curb Sloped, HMA" and "Curb Vertical, HMA".

6.04.07 (revised 11-28-2011)

Plain Concrete Pavement

A. Guideline for Use of Plain Pavement

By Department practice, concrete pavements are nonreinforced except at bridge approach slabs and as specifically recommended for isolated special situations.

B. Joint Type and Spacing

Concrete pavement, if not reinforced, will normally crack transversely at 12' to 16' intervals. Hence, transverse joints must be within this spacing range if mid-slab cracking is to be avoided. The Department uses 14' to 16' joint spacing based on pavement thickness.

Skewed joints can be used on service roads when it is the standard used by the local agency for the same class of road or street. The rationale behind skewed joints, which may be combined with randomized spacing, is that rhythmic or resonant responses in vehicles are damped. Skewing also minimizes the effect of any roughness of the joints and improves the riding quality of a pavement if the slabs have curled or if faulting is present. There is some evidence that skewing reduces faulting of plain pavements.

Skewing is generally 2' for a 12' width, 3' for a 16' width, and 4' for a 24' width. The direction of the skew should be as shown below:

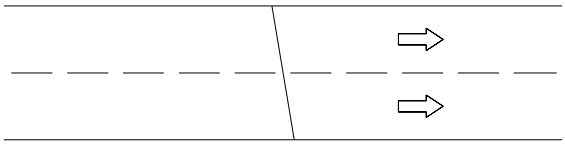

6.04.07B (continued)

(Studies have shown potential for a little less pumping when the skew angle is as shown, rather than the other way.)

When random spacing is employed in conjunction with skewed joints, use the sequence of 12' – 13' – 16' – 15' Random spacing is of little benefit on slow-speed roadways, such as rest area ramps.

With reference to Standard Plans R-39P-Series and R-41-Series, the following joints should be used in nonreinforced pavement:

1. Service Roads - Use transverse plane of weakness joint, symbol W, skewed 2' per 11' or 12' lane*, spaced at 16'. Use lane ties as shown for longitudinal joints, symbol B or D.

2. Concrete Base Course Widening - Use transverse plane of weakness joint, symbol U, spaced at 16', not skewed. (See Standard Plan R-42-Series.) Use lane ties as specified for longitudinal joints, symbol B or D.

3. Urban Streets - Use transverse plane of weakness joint, symbol W, skewed 2' per 11' or 12' lane*, spaced at 16' maximum. Use lane ties as specified for longitudinal joints, symbol B or D.

* Skewing of transverse joints may be omitted if cross streets are closely spaced requiring expansion joints at 90° at the spring lines.

7.01.09

Longitudinal Deck Grades (11-28-2011)

Longitudinal grades should be provided to facilitate deck surface drainage. A desirable minimum grade (or minimum projected tangent grade for vertical curves) is typically 0.5%, but grades of 0.3% may be used. When it is necessary to use grades that are flatter than 0.3%, provide adequate deck drainage with drains and downspouts. In addition, close attention to drainage is critical for sag and crest vertical curves when the K value (rate of grade change) is greater than 167 where,

K=L/A
L= Length of vertical curve, feet
A= Algebraic difference in grades, percent

Consider alignments that locate vertical curves outside the limits of the structure where the desirable minimum longitudinal grades can be achieved.

Structure on 1% or steeper grades should be fixed to the substructure at the lower end of structure where practicable. (9-2-2003)

7.01.10

Temporary Support Systems and Construction Methods

Where construction procedures will require a temporary support system, the plans shall note the loading that will be imposed on the system and the allowable stresses that can be assumed for the supporting soil. (8-6-92)

Where a construction sequence is critical, where there are restrictions on access for construction, or where the method of temporary support is not obvious, the plans shall provide an acceptable system that the contractor may employ. Alternatives may be proposed by the contractor, but these must be reviewed and approved by the Engineer if they are to be substituted.

This review is to insure that:

A. appropriate design specifications and permit limitations have been complied with, and

B. any temporary or permanent stresses imposed on the completed structure are within allowable limits.

C. possible vibration induced damage to existing structures and utilities is identified and mitigated. (11-28-2011)

7.01.09

Longitudinal Deck Grades (11-28-2011)

Longitudinal grades should be provided to facilitate deck surface drainage. A desirable minimum grade (or minimum projected tangent grade for vertical curves) is typically 0.5%, but grades of 0.3% may be used. When it is necessary to use grades that are flatter than 0.3%, provide adequate deck drainage with drains and downspouts. In addition, close attention to drainage is critical for sag and crest vertical curves when the K value (rate of grade change) is greater than 167 where,

K=L/A
L= Length of vertical curve, feet
A= Algebraic difference in grades, percent

Consider alignments that locate vertical curves outside the limits of the structure where the desirable minimum longitudinal grades can be achieved.

Structure on 1% or steeper grades should be fixed to the substructure at the lower end of structure where practicable. (9-2-2003)

7.01.10

Temporary Support Systems and Construction Methods

Where construction procedures will require a temporary support system, the plans shall note the loading that will be imposed on the system and the allowable stresses that can be assumed for the supporting soil. (8-6-92)

Where a construction sequence is critical, where there are restrictions on access for construction, or where the method of temporary support is not obvious, the plans shall provide an acceptable system that the contractor may employ. Alternatives may be proposed by the contractor, but these must be reviewed and approved by the Engineer if they are to be substituted.

This review is to insure that:

A. appropriate design specifications and permit limitations have been complied with, and

B. any temporary or permanent stresses imposed on the completed structure are within allowable limits.

C. possible vibration induced damage to existing structures and utilities is identified and mitigated. (11-28-2011)

7.02.24

Joints in Deck Slabs

A. Longitudinal Joints

Deck widths greater than 100'-0" require a longitudinal open/expansion joint. (5-6-99)

1. Centerline (Median) Joint

   For bridges requiring a longitudinal open joint, which are also on roadways having a median barrier, the barrier is to be split, with the open joint extending up between the two halves.

2. Valley Gutter Joint

   To facilitate the construction of bridges with valley gutters, we will show an optional longitudinal construction joint 2'-0" inside or outside the gutter centerline (depending on beam placement), and the reinforcing steel will be detailed with a splice at the gutter centerline.

3. Construction Joints

   An optional longitudinal construction joint is to be shown on the plans when the bridge width exceeds 75'-0". For skews greater than or equal to 45°, this 75'-0" is measured parallel to the reference lines. This optional joint is to be placed at the edge of a pavement lane, regardless of location of the crown of the road.

   Longitudinal construction joints are not to be placed over the flange of a beam.

4. Part-Width Construction

   Where possible, longitudinal construction joints used to facilitate part-width construction should be placed at the edge of a pavement lane. This greatly improves ride quality and aesthetics. (5-1-2000)

7.02.24 (continued)

B. Transverse Joints

1. Construction Joints

   At construction joints where movement is anticipated, an expansion joint device shall be used. Construction joints over piers at fixed bearings are to be a sawed joint 1½" deep by ⅛" wide (minimum) in the top of slab. The joint is to be sawed within 4 hours of removing the curing and is to be filled with Hot-Poured Joint Sealant according to Standard Specification Subsection 914.04. Included in the bid item "Superstructure Concrete, Form, Finish, and Cure, Night Casting." (10-24-2001)(11-28-2011)

2. Expansion Joints

   The maximum single opening in an expansion joint device shall be no more than 4", measured in the direction of traffic. When movement required is greater than 4" a modular expansion joint shall be used. (5-6-99)

   Expansion joint devices shall be installed ⅛" to ¼" below the adjacent deck elevation. This fact shall be taken into account during design. This recess is to prevent damage to the joint from snow plows. (5-6-99)

   The EJ3 Sheet included with the plans will designate the total travel that is required at each joint, measured along the centerline of bridge, and the angle of crossing rounded off to the nearest 10º. The length of the device required at each location will be shown, and these lengths totaled for one bid item, "Expansion Joint Device." The fact that the one item includes several minimum travel requirements should not affect the bid price since we currently find little or no difference when we list minimum travels separately. The EJ4 Sheet shall be used with replacement of existing neoprene expansion joint devices. (8-20-2009)

7.02.24

Joints in Deck Slabs

A. Longitudinal Joints

Deck widths greater than 100'-0" require a longitudinal open/expansion joint. (5-6-99)

1. Centerline (Median) Joint

   For bridges requiring a longitudinal open joint, which are also on roadways having a median barrier, the barrier is to be split, with the open joint extending up between the two halves.

2. Valley Gutter Joint

   To facilitate the construction of bridges with valley gutters, we will show an optional longitudinal construction joint 2'-0" inside or outside the gutter centerline (depending on beam placement), and the reinforcing steel will be detailed with a splice at the gutter centerline.

3. Construction Joints

   An optional longitudinal construction joint is to be shown on the plans when the bridge width exceeds 75'-0". For skews greater than or equal to 45°, this 75'-0" is measured parallel to the reference lines. This optional joint is to be placed at the edge of a pavement lane, regardless of location of the crown of the road.

   Longitudinal construction joints are not to be placed over the flange of a beam.

4. Part-Width Construction

   Where possible, longitudinal construction joints used to facilitate part-width construction should be placed at the edge of a pavement lane. This greatly improves ride quality and aesthetics. (5-1-2000)

7.02.24 (continued)

B. Transverse Joints

1. Construction Joints

   At construction joints where movement is anticipated, an expansion joint device shall be used. Construction joints over piers at fixed bearings are to be a sawed joint 1½" deep by ⅛" wide (minimum) in the top of slab. The joint is to be sawed within 4 hours of removing the curing and is to be filled with Hot-Poured Joint Sealant according to Standard Specification Subsection 914.04. Included in the bid item "Superstructure Concrete, Form, Finish, and Cure, Night Casting." (10-24-2001)(11-28-2011)

2. Expansion Joints

   The maximum single opening in an expansion joint device shall be no more than 4", measured in the direction of traffic. When movement required is greater than 4" a modular expansion joint shall be used. (5-6-99)

   Expansion joint devices shall be installed ⅛" to ¼" below the adjacent deck elevation. This fact shall be taken into account during design. This recess is to prevent damage to the joint from snow plows. (5-6-99)

   The EJ3 Sheet included with the plans will designate the total travel that is required at each joint, measured along the centerline of bridge, and the angle of crossing rounded off to the nearest 10º. The length of the device required at each location will be shown, and these lengths totaled for one bid item, "Expansion Joint Device." The fact that the one item includes several minimum travel requirements should not affect the bid price since we currently find little or no difference when we list minimum travels separately. The EJ4 Sheet shall be used with replacement of existing neoprene expansion joint devices. (11-28-2011)

7.03.12 (continued)

Mechanically Stabilized Earth (MSE) Wall Requirements

C. Bridge Abutments at MSE Walls

1. Pile supported abutments are required in most cases.

   a. Maximize pile spacing to reduce interference with soil reinforcement.
   b. Incorporate/consider pile bending in design (loose soil vs. stiff soil).
   c. Use pile liner to eliminate downdrag between MSE wall backfill and abutment pile.

2. Spread footings may be allowed if either of the following conditions are met:

   a. The MSE wall is on bedrock.
   b. The bridge is single-span, not constructed part-width, and spread footings are recommended by the Geotechnical Section.

3. Embed footings 1'-6" below the top of coping to allow a minimum of 6" clearance above the top of soil reinforcement. Four foot (4') minimum embedment is decreased due to free draining ability of Backfill, Select material required behind MSE walls.

4. The use of 5' sliding slab abutments (BDG 6.20.03A) and integral/semi-integral abutments with a sleeper slab closer than 20' to the abutment (BDG 6.20.04 series) is allowed with a 20' concrete approach pavement as detailed on Standard Plan R – 43 & 45 - Series located on the road approach side of the sleeper slab. (11-28-2011)

7.03.12 (continued)

D. Abutment Footing Clearances and Setbacks

1. The edge of pile supported footings shall be located with a minimum clearance of 2 feet from the back face of the MSE facing panels.

2. The edge of spread footings shall be located with a minimum clearance of 5 feet from the back face of the MSE facing panels.

3. The centerline of the front row of piles shall be setback 4.5 feet from the back face of the MSE facing panels.

E. Soil reinforcement length requirements

1. Soil reinforcement length is determined by design, but shall not be less than 0.7 times the wall height (H), or 8 feet whichever is greater.

2. The wall height (H) is to be measured from the proposed finished grade where it intersects the back of the wall face, to the top of the leveling pad.

3. For walls supporting a sloping surcharge, the value H1 shall be substituted for H in the above minimum requirements, where
   $H1 = H + (\tan \beta \times 0.3H)/(1-0.3\tan \beta)$
   β = angle of backslope

4. For any section of MSE wall, the soil reinforcement will be the same length from top to bottom.

5. Attaching soil reinforcement to substructure as a means to provide horizontal resistance/anchorage is not allowed.

7.03.12 (continued)

Mechanically Stabilized Earth (MSE) Wall Requirements

C. Bridge Abutments at MSE Walls

1. Pile supported abutments are required in most cases.

   a. Maximize pile spacing to reduce interference with soil reinforcement.
   b. Incorporate/consider pile bending in design (loose soil vs. stiff soil).
   c. Use pile liner to eliminate downdrag between MSE wall backfill and abutment pile.

2. Spread footings may be allowed if either of the following conditions are met:

   a. The MSE wall is on bedrock.
   b. The bridge is single-span, not constructed part-width, and spread footings are recommended by the geotechnical unit.

3. Embed footings 1'-6" below the top of coping to allow a minimum of 6" clearance above the top of soil reinforcement. Four foot (4') minimum embedment is decreased due to free draining ability of Backfill, Select material required behind MSE walls.

4. The use of 5' sliding slab abutments (BDG 6.20.03A) and integral/semi-integral abutments with a sleeper slab closer than 20' to the abutment (BDG 6.20.04 series) is allowed with a 20' concrete approach pavement as detailed on Standard Plan R - 43&45 - Series located on the road approach side of the sleeper slab. (11-28-2011)

7.03.12 (continued)

D. Abutment Footing Clearances and Setbacks

1. The edge of pile supported footings shall be located with a minimum clearance of 2 feet from the back face of the MSE facing panels.

2. The edge of spread footings shall be located with a minimum clearance of 5 feet from the back face of the MSE facing panels.

3. The centerline of the front row of piles shall be setback 4.5 feet from the back face of the MSE facing panels.

E. Soil reinforcement length requirements

1. Soil reinforcement length is determined by design, but shall not be less than 0.7 times the wall height (H), or 8 feet whichever is greater.

2. The wall height (H) is to be measured from the proposed finished grade where it intersects the back of the wall face, to the top of the leveling pad.

3. For walls supporting a sloping surcharge, the value H1 shall be substituted for H in the above minimum requirements, where
   $H1 = H + (\tan \beta \times 0.3H)/(1-0.3\tan \beta)$
   β = angle of backslope

4. For any section of MSE wall, the soil reinforcement will be the same length from top to bottom.

5. Attaching soil reinforcement to substructure as a means to provide horizontal resistance/anchorage is not allowed.

8.02

TITLE SHEET

Care should be taken to see that the notes appearing on the title sheet actually apply to the work being done on the project. Most of the standard notes included in the Design Manual relate to new construction. For rehabilitation projects the wording of some of these notes must be modified. Other notes are completely inappropriate and should be deleted.

A1. The design of (this) (these) structure(s) (except the railroad overpass(es) (is) (are) based on 1.2 times the current AASHTO LRFD Bridge Design Specification HL-93 loading with the exception that the design tandem portion of the HL-93 load definition shall be replaced by a single 60 kip axle load before application of this 1.2 factor. The resulting load is designated HL-93 Mod. Live load plus dynamic load allowance deflection does not exceed (1/425*) (1/800) (1/1000**) of span length (and (1/375) (1/300) of cantilever arm). [*Wood construction.] [**Use for structures with pedestrian loads.] (8-20-2009)

A2. The design of this structure is based on current AASHTO LRFD Bridge Design Specification pedestrian loading of 90 psf (and a maintenance vehicle (H5) (H10) loading, not acting concurrently). Live load deflection does not exceed 1/1000 of span length and 1/375 of cantilever arm. [Use for pedestrian bridges. For Clear Bridge Width, w, greater than or equal to 10'-0", use an H10 truck. For w greater than or equal to 7'-0" and less than 10'-0", use an H5 truck. For w less than 7'-0" the bridge does not need to be designed for a maintenance vehicle.] (11-28-2011)

A3. The design of the deck slab is based upon the strip method as defined in the current AASHTO LRFD Bridge Design Specification. (8-20-2009)

8.02 (continued)

B1. The (reconstruction) (rehabilitation) design is based on 1.2 times the current AASHTO LRFD Bridge Design Specification HL-93 loading with the exception that the design tandem portion of the HL-93 load definition shall be replaced by a single 60 kip axle load before application of this 1.2 factor. The resulting load is designated HL-93 Mod. Live load plus dynamic load allowance deflection does not exceed (1/425**) (1/800) (1/1000***) of span length (and 1/375) (1/300) of cantilever arm. The original structure was designed for _____ (and alternate military*) loading (based on AASHTO Standard Specifications for Highway Bridges). [*Used only for structures on interstate routes.] [**Wood construction.] [***Use for structures with pedestrian loads.] [See Subsection 7.01.06 for deflection limits.] (8-20-2009)

B2. The (reconstruction) (rehabilitation) design is based on the 17th Edition of AASHTO Standard Specifications for Highway Bridges (HS25) (HS20-44) (and alternate military*) loading. Live load plus impact deflection does not exceed (1/425) (1/800) (1/1000) of span length (and 1/375) (1/300) of cantilever arm. The original structure was designed for ____ (and alternate military*) loading based on AASHTO Standard Specifications for Highway Bridges. [*Use only for structures on interstate routes.] [See 17th Edition of AASHTO for deflection limits.] [Use note for Load Factor method of design.] (8-20-2009)

C Except where otherwise indicated on these plans, or in the proposal and supplemental specifications contained herein, all materials and workmanship shall be according to the Michigan Department of Transportation Standard Specifications for Construction _____ Edition.

8.05

GENERAL PLAN OF STRUCTURE SHEET

A1. The design of this structure is based on 1.2 times the current AASHTO LRFD Bridge Design Specification HL-93 loading with the exception that the design tandem portion of the HL-93 load definition shall be replaced by a single 60 kip axle load before application of this 1.2 factor. The resulting load is designated HL-93 Mod. Live load plus dynamic load allowance deflection does not exceed (1/425*) (1/800) (1/1000**) of span length (and 1/375) (1/300) of cantilever arm. [*Wood construction.] [**Use for structures with pedestrian loads.] [See Subsection 7.01.06 for deflection limits.] (8-20-2009)

A2. The design of this structure is based on current AASHTO LRFD Bridge Design Specification pedestrian loading of 90 psf (and a maintenance vehicle (H5) (H10) loading, not acting concurrently). Live load deflection does not exceed 1/1000 of span length and 1/375 of cantilever arm. [Use for pedestrian bridges. For Clear Bridge Width, w, greater than or equal to 10'-0", use an H10 truck. For w greater than or equal to 7'-0" and less than 10'-0", use an H5 truck. For w less than 7'-0" the bridge does not need to be designed for a maintenance vehicle.] (11-28-2011)

A3. The design of the deck slab is based upon the strip method as defined in the current AASHTO LRFD Bridge Design Specification. (8-20-2009)

8.05 (continued)

B1. The (reconstruction) (rehabilitation) design is based on 1.2 times the current AASHTO LRFD Bridge Design Specification HL-93 loading with the exception that the design tandem portion of the HL-93 load definition shall be replaced by a single 60 kip axle load before application of this 1.2 factor. The resulting load is designated HL-93 Mod. Live load plus dynamic load allowance deflection does not exceed (1/425**) (1/800) (1/1000***) of span length (and 1/375) (1/300) of cantilever arm. The original structure was designed for ____ (and alternate military*) loading (based on AASHTO Standard Specifications for Highway Bridges). [*Used only for structures on interstate routes.] [**Wood construction.] [***Use for structures with pedestrian loads.] [See Subsection 7.01.06 for deflection limits.] [Use note for LRFD method of design.] (8-20-2009)

B2. The (reconstruction) (rehabilitation) design is based on the 17th Edition of AASHTO Standard Specifications for Highway Bridges (HS25) (HS20-44) (and alternate military*) loading. Live load plus impact deflection does not exceed (1/425) (1/800) (1/1000) of span length (and 1/375) (1/300) of cantilever arm. The original structure was designed for ____ (and alternate military*) loading based on AASHTO Standard Specifications for Highway Bridges. [*Use only for structures on interstate routes.] [See 17th Edition of AASHTO for deflection limits.] [Use note for Load Factor method of design.] (8-20-2009)

8.07.01(continued)

Miscellaneous Notes

Q. Silica Fume Modified Concrete or Latex Modified Concrete may be selected for the bridge deck overlay concrete. (9-2-2003)

R. Note Deleted. (8-20-2009)

S. The contractor may use metal stay in place forms. If used, eliminating the polystyrene and filling the corrugations with concrete is prohibited. [Use with metal stay in place forms where design calculations show the increase in dead load will result in an over stress.] (8-20-99)

T. The contractor shall not use stay-in-place forms. All materials used to form the deck must be removed prior to opening the bridge to traffic. [Use where beam spacing or form loads preclude the use of stay-in-place forms.] (9-2-2003)

U. The deck shall be saw-cut on both the top and bottom surface prior to deck removal procedures. [Use with bridge widening when the saw-cut is on the outside of the fascia beam or with removal procedures required for stage construction.] (8-20-2009)

V. Fill perpendicular railing joints with 1" joint filler to ½" from the bevels of railing and seal remaining ½" with a silicone rubber sealant. Included in the bid item (Bridge Barrier Railing, (Type 4) (Type 5)) (Bridge Railing, Aesthetic Parapet Tube). [Use in all concrete railings over the piers of continuous deck, at midspan on all structures with a span greater than 100'-0" and cantilever decks where the cantilever is more than 10'-0" long.] (12-5-2005)

8.07.01(continued)

W. The Contractor is to provide a sawed joint ½" [1½"] deep by 1/8" wide (minimum) in the top of slab at [transverse construction joints] [at longitudinal construction joints] [and at fixed pin & hanger joints] [the locations shown in section(s)___]. The joint is to be sawed within 4 hours of removing the curing and is to be filled with Hot-Poured Joint Sealant. (Included in the bid item "Superstructure Conc, Form, Finish, and Cure, Night Casting (Structure No.)"). [Use at all construction joints. Use 1½" by 1/8" at the locations shown for continuous for live load slabs.] (11-28-2011)

X. Additional concrete and forming used to increase slab depth at the Bridge Railing, 2 Tube will not be paid for separately, but shall be included in the bid item "Superstructure Conc (, Night Casting)." [Use when 2 tube railing is placed between traffic and a pedestrian sidewalk or when railing is not on overhang portion of deck slab.] (12-5-2005)

Y. No portion of deck formwork or supports shall protrude above the top of proposed haunch (or top of the beam where there is no proposed haunch). (8-20-2009)

8.07.01(continued)

Miscellaneous Notes

Q. Silica Fume Modified Concrete or Latex Modified Concrete may be selected for the bridge deck overlay concrete. (9-2-2003)

R. Note Deleted. (11-28-2011)

S. The contractor may use metal stay in place forms. If used, eliminating the polystyrene and filling the corrugations with concrete is prohibited. [Use with metal stay in place forms where design calculations show the increase in dead load will result in an over stress.] (8-20-99)

T. The contractor shall not use stay-in-place forms. All materials used to form the deck must be removed prior to opening the bridge to traffic. [Use where beam spacing or form loads preclude the use of stay-in-place forms.] (9-2-2003)

U. The deck shall be saw-cut on both the top and bottom surface prior to deck removal procedures. [Use with bridge widening when the saw-cut is on the outside of the fascia beam or with removal procedures required for stage construction.] (9-18-98) (11-28-2011)

V. Fill perpendicular railing joints with 1" joint filler to ½" from the bevels of railing and seal remaining ½" with a silicone rubber sealant. Included in the bid item (Bridge Barrier Railing, (Type 4) (Type 5)) (Bridge Railing, Aesthetic Parapet Tube). [Use in all concrete railings over the piers of continuous deck, at midspan on all structures with a span greater than 100'-0" and cantilever decks where the cantilever is more than 10'-0" long.] (12-5-2005)

8.07.01(continued)

W. The Contractor is to provide a sawed joint ½" [1½"] deep by 1/8" wide (minimum) in the top of slab at [transverse construction joints] [at longitudinal construction joints] [and at fixed pin & hanger joints] [the locations shown in section(s)___]. The joint is to be sawed within 4 hours of removing the curing and is to be filled with Hot-Poured Joint Sealant. (Included in the bid item "Superstructure Conc, Form, Finish, and Cure, Night Casting (Structure No.)"). [Use at all construction joints. Use 1½" by 1/8" at the locations shown for continuous for live load slabs.] (11-28-2011)

X. Additional concrete and forming used to increase slab depth at the Bridge Railing, 2 Tube will not be paid for separately, but shall be included in the bid item "Superstructure Conc (, Night Casting)." [Use when 2 tube railing is placed between traffic and a pedestrian sidewalk or when railing is not on overhang portion of deck slab.] (12-5-2005)

Y. No portion of deck formwork or supports shall protrude above the top of proposed haunch (or top of the beam where there is no proposed haunch). (11-28-2011)

DRAWN BY: BLT CHECKED BY: VZ APPROVED BY: TGF	MICHIGAN DEPARTMENT OF TRANSPORTATION BUREAU OF HIGHWAY DEVELOPMENT PIER NOSING DETAIL	ISSUED: 11/28/11 SUPERSEDES: 11/27/01

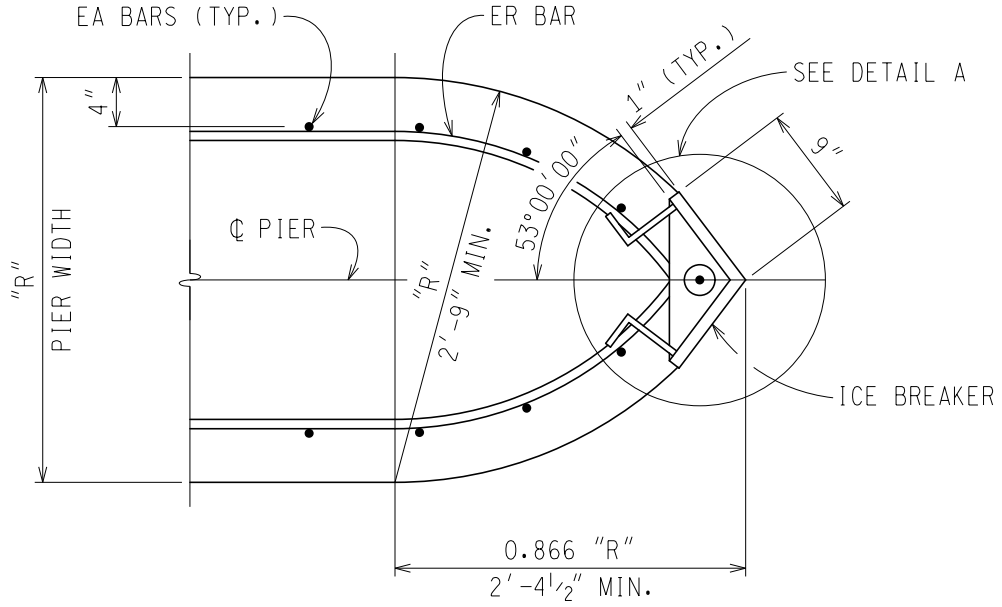

PIER NOSING DETAIL

PROPOSED ICE BREAKERS SHALL BE SET IN PLACE BEFORE POURING CONCRETE. MAKE A SMOOTH TRANSITION FROM FACE OF ICE BREAKER TO FACE OF WALL. ICE BREAKER SHALL BE MADE OF ASTM APPROVED STEEL AND HOT DIP GALVANIZED ACCORDING TO AASHTO M232.

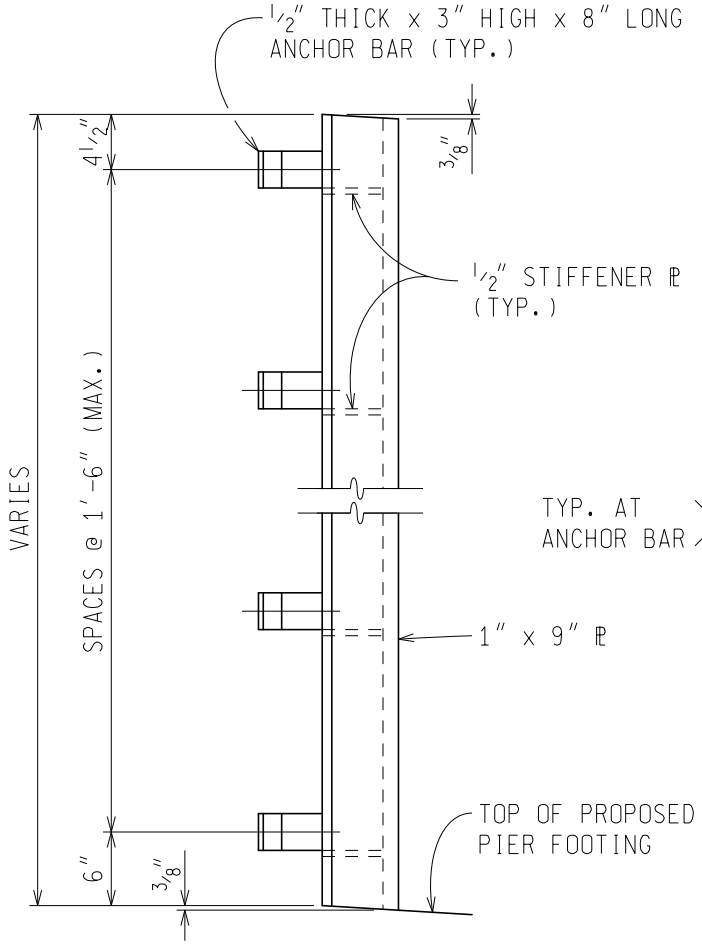

ELEVATION

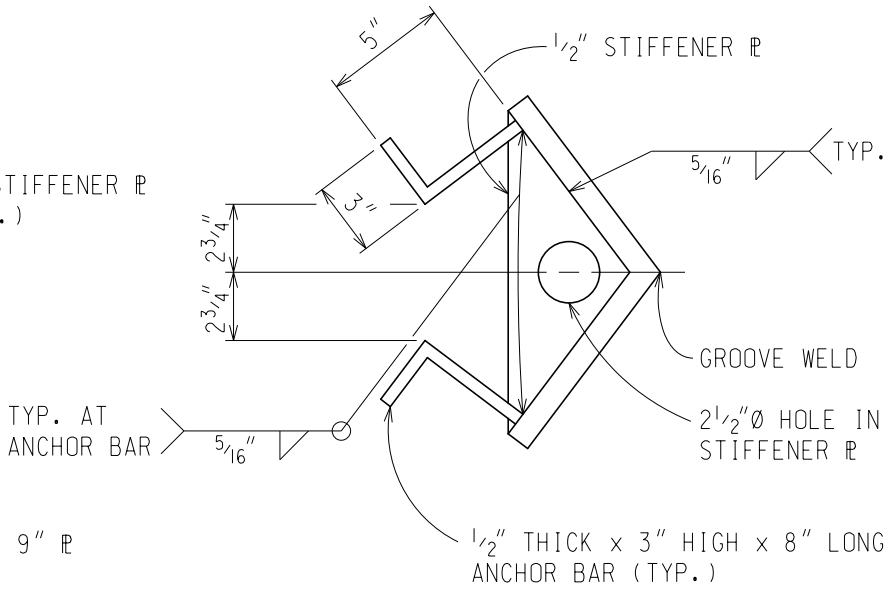

DETAIL A

PREPARED BY DESIGN DIVISION	5.21.01

DRAWN BY: BLT CHECKED BY: VZ APPROVED BY: TGF	MICHIGAN DEPARTMENT OF TRANSPORTATION BUREAU OF HIGHWAY DEVELOPMENT INTEGRAL AND SEMI-INTEGRAL ABUTMENT SLEEPER SLAB DETAILS	ISSUED: 11/28/11 SUPERSEDES: 02/14/11

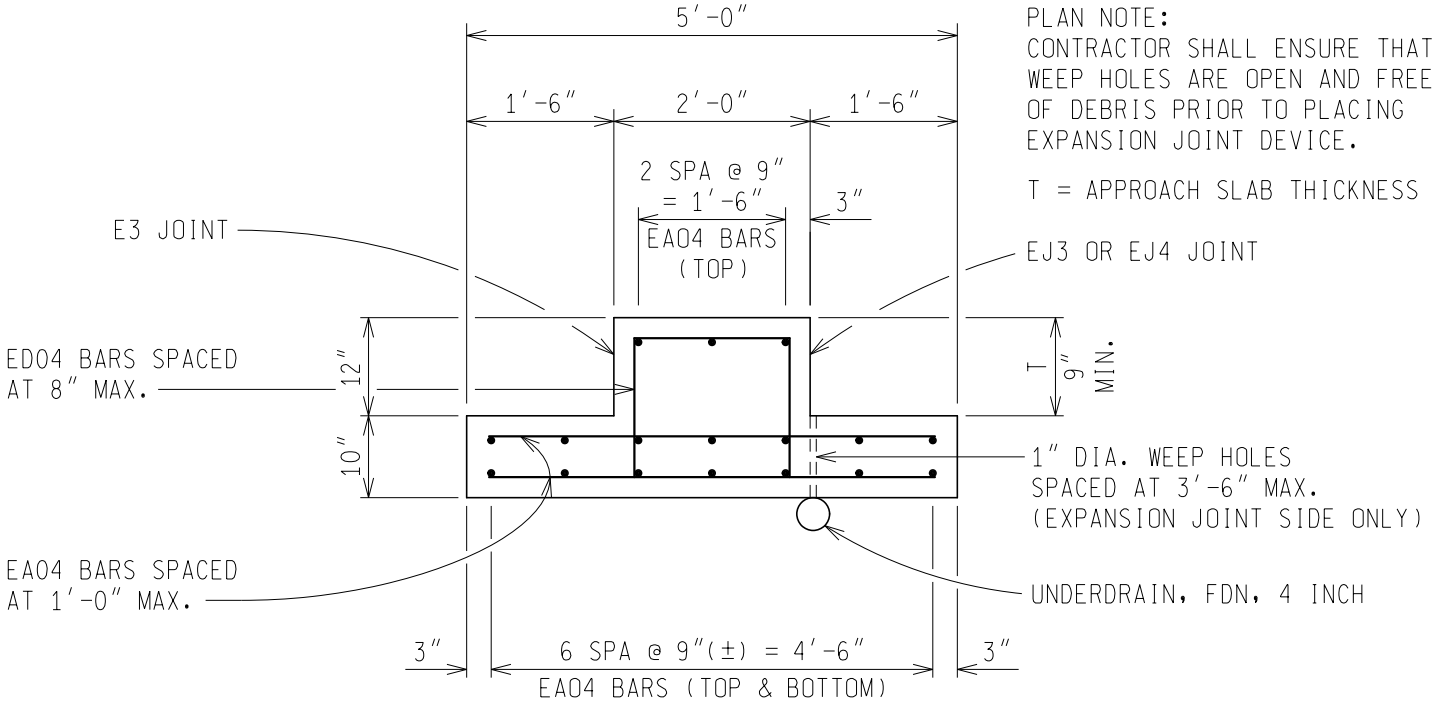

PLAN NOTE:
CONTRACTOR SHALL ENSURE THAT WEEP HOLES ARE OPEN AND FREE OF DEBRIS PRIOR TO PLACING EXPANSION JOINT DEVICE.

T = APPROACH SLAB THICKNESS

TYPICAL SECTION THRU SLEEPER SLAB WITH CONCRETE APPROACH

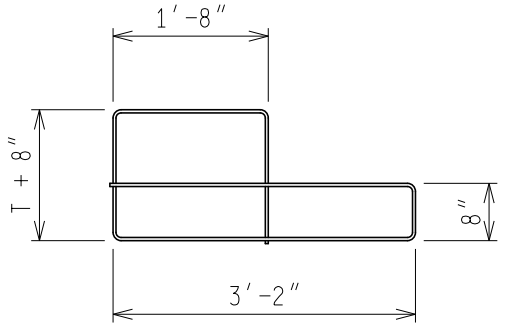

EM04 BAR

L = 10'-0" + 2(T)

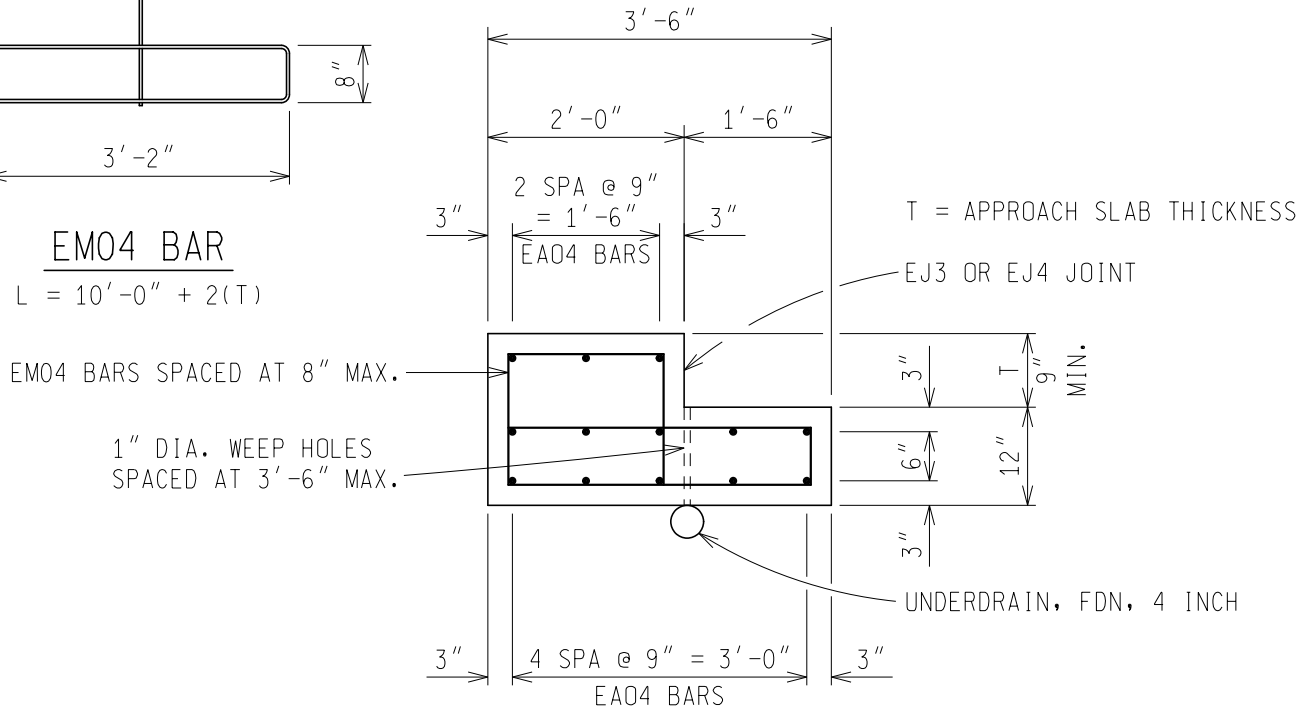

T = APPROACH SLAB THICKNESS

TYPICAL SECTION THRU SLEEPER SLAB WITH HMA APPROACH

PREPARED BY DESIGN DIVISION	6.20.04C