Road & Bridge Design Publications

Monthly Update – July 2012

Revisions for the month of **July** are listed and displayed below. New special details are to be included in projects submitted for the **October** letting as is stated on the special detail index sheets. Please contact Wayne Pikka (pikkaw@michigan.gov) for any questions related to the road changes or Vladimir Zokvic (zokvicv@michigan.gov) for questions related to the bridge changes.

Special Details

B-25-G: Bridge Railing, Aesthetic Parapet Tube**:** The end wall elevation sketch on sheet three was revised to show closer post spacing at the end wall.

Road Design Manual

1.02.10B2: Sheet Breaks: As part of the DDEP process, the sheet break length for the 200 scale sheets was modified from 2500' to 2400', with all other scales remaining unchanged.

Bridge Design Manual

8.06.05 M (LRFD) & 8.06.05 I. (LFD)**:** Steel piles used for pile bents are considered primary members. Weld according to AWS Bridge Welding Code and Special Provision.

12.08.03 B: Updated column wrapping criteria.

Updates to MDOT Cell Library, Bridge Auto Draw Program, etc., may be required in tandem with some of this month's updates. Until such updates to automated tools can be made, it is the designer's/detailer's responsibility to manually incorporate any necessary revisions to notes and plan details to reflect these revisions.

Index to Special Details

7-30-2012

⑥

SPECIAL DETAIL NUMBER	NUMBER OF SHEETS	TITLE	CURRENT DATE
21	2	GUARDRAIL AT INTERSECTIONS	5-24-01
24	5	GUARDRAIL ANCHORED IN BACK SLOPE TYPES 4B & 4T	7-22-02
R-29-H	4	DRIVEWAY OPENINGS & APPROACHES, AND CONCRETE SIDEWALK	10-20-11
R-31-F	2	INTEGRAL CURB AND INTEGRAL CURB & GUTTER	1-30-12
R-41-G	2	LONGITUDINAL PAVEMENT JOINTS	4-9-12
R-42-F	6	TYPICAL JOINT LAYOUTS FOR CONCRETE PAVEMENT	12-6-10
R-43-I	2	LOCATION OF TRANSVERSE JOINTS IN PLAIN CONCRETE PAVEMENT	2-8-12
R-45-I	2	PAVEMENT REINFORCEMENT FOR BRIDGE APPROACH	12-6-11
R-54-H	4	CONCRETE BARRIER, SINGLE FACE	5-18-12
R-80-E	8	GRANULAR BLANKETS, UNDERDRAINS, OUTLET ENDINGS & BULKHEADS	6-13-12
R-99-B	2	CHAIN LINK FENCE WITH WIRE ROPE	11-1-00
R-100-G	4	SEEDING AND TREE PLANTING	9-8-11
R-126-I	5	PLACEMENT OF TEMPORARY BARRIER	3-26-12

*** Denotes New or Revised Special Detail to be included in projects for (beginning with) the October letting.**

Note: Former Standard Plans IV-87, IV-89, IV-90, and IV-91 Series, used for building cast-in-place concrete head walls for elliptical and circular pipe culverts, are now being replaced with plans that detail each specific size. The Municipal Utilities Unit will provide these full sized special details for inclusion in construction plans for MDOT jobs. To assure prompt delivery, requests ***must*** be made in advance.

Former Standard Plans IV-93 and IV-94 series have been replaced with precast concrete box & three-sided culverts as per the 2012 Standard Specifications for Construction.

Index to Bridge Detail Sheets

7-30-2012

⑦

DETAIL NUMBER	NUMBER OF SHEETS	TITLE	CURRENT DATE
B-21-I	4	BRIDGE RAILING, 2 TUBE	6-3-11
B-23-E	4	BRIDGE RAILING, THRIE BEAM RETROFIT	10-19-09
*B-25-G	6	BRIDGE RAILING, AESTHETIC PARAPET TUBE	7-10-12
EJ3Z	1 or 2	EXPANSION JOINT DETAILS	6-8-11
EJ4M	1 or 2	EXPANSION JOINT DETAILS	6-8-11
PC-2G	1	70" PRESTRESSED CONCRETE I-BEAM DETAILS	3-31-06
PC-4E	1	PRESTRESSED CONCRETE 1800 BEAM DETAILS	3-31-06
PC-1L	1	PRESTRESSED CONCRETE I-BEAM DETAILS	7-12-06

*** Denotes New or Revised Special Detail to be included in projects for (beginning with) the October letting.**

Note: Details EJ3Z & EJ4M are interactive, i.e. designers and detailers choose details based upon railing type and angle of crossing. Place all details appropriate for the project, structure specific information, and the Expansion Joint Device quantity on the sheet. The sheet shall then be added to the plans as a normal plan sheet.

Detail PC-1L, PC-2G and PC-4E shall have structure specific information and quantities added to the sheet. The sheet shall then be added to the plans as a normal plan sheet.

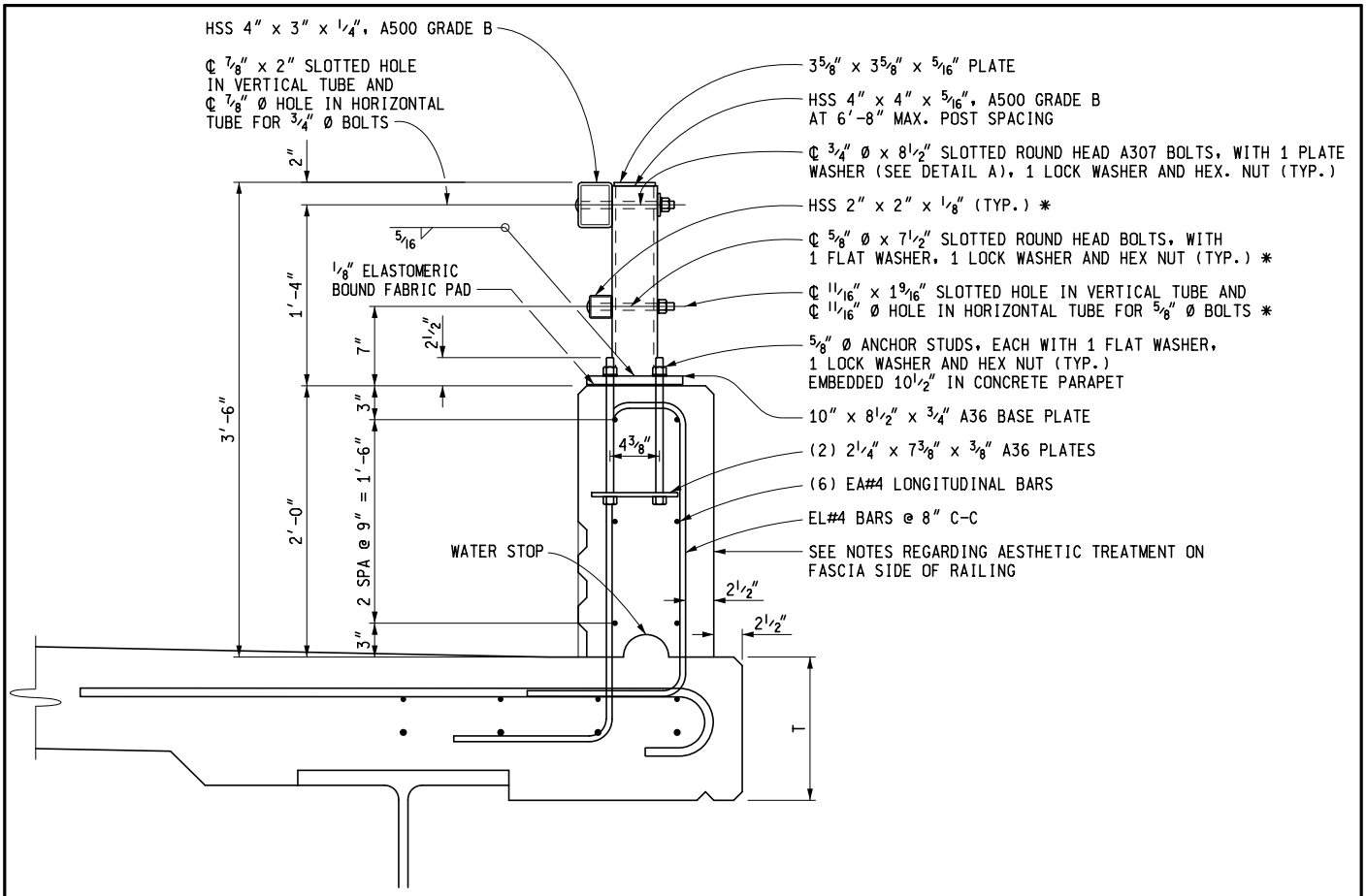

FLUSH MOUNT BRIDGE RAILING

NOTES:

ALL WORK AND MATERIAL SHALL BE IN ACCORDANCE WITH THE STANDARD SPECIFICATIONS.

DETAILS SHOWN ARE IN ACCORDANCE WITH CURRENT AASHTO SPECIFICATIONS.

BRIDGE RAILING USED WITH SIDEWALK SHALL BE USED ONLY WITH THE SIDEWALK CONFIGURATION (PROFILE) SHOWN ON THIS STANDARD PLAN.

NO SLIP FORMING OF "BRIDGE RAILING, AESTHETIC PARAPET TUBE" SHALL BE ALLOWED. RAILING SHALL BE CAST IN PLACE.

THE LIGHT STANDARD ANCHOR BOLT ASSEMBLY IS INCLUDED IN THE BID ITEM "BRIDGE RAILING, AESTHETIC PARAPET TUBE". SEE STANDARD PLAN B-103-SERIES.

FOR LIGHT STANDARD ANCHOR BOLT ASSEMBLY DETAILS, IF BRIDGE RAILING, AESTHETIC PARAPET TUBE IS PLACED FLUSH ON THE BRIDGE DECK (WITHOUT SIDEWALK), THE LIGHTING CONDUIT SHALL NOT BE PLACED IN THE RAILING.

A RUBBED FINISH ON THE VERTICAL AND TOP CONCRETE SURFACES OF THE PARAPET RAILING IS REQUIRED.

AESTHETIC TREATMENT AS DETAILED ON THIS SHEET SHALL BE ADDED TO THE FASCIA SIDE OF RAILING IF NO AESTHETIC TREATMENT IS DETAILED ON THE PLAN SHEETS AND SHALL BE INCLUDED IN THE BID ITEM "BRIDGE RAILING, AESTHETIC PARAPET TUBE". AESTHETIC TREATMENT DETAILED ON THE PLAN SHEETS MAY BE UP TO 1" IN CONCRETE DEPTH WITHOUT MODIFICATION TO THE RAILING WIDTH AND SHALL BE INCLUDED IN THE BID ITEM "BRIDGE RAILING, AESTHETIC PARAPET TUBE". AESTHETIC TREATMENT REQUIRING ADDITIONAL RAILING WIDTH OR THE USE OF ELASTOMERIC FORM LINERS SHALL BE PAID FOR SEPARATELY.

* THE HSS 2" x 2" x 1/8" RAIL, SLOTTED HOLE, AND 5/8" BOLT ARE NOT REQUIRED WHEN RAILING IS USED IN COMBINATION WITH PEDESTRIAN FENCING (SEE STANDARD PLAN B-41-SERIES).

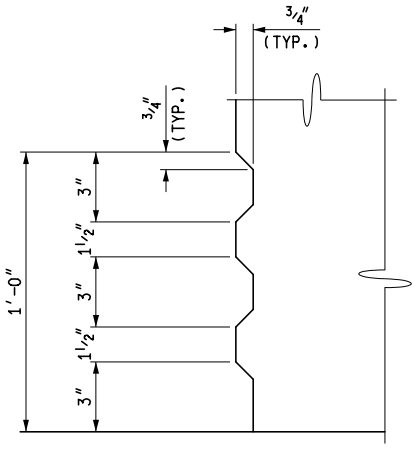

AESTHETIC TREATMENT DETAIL

MDOT Michigan Department of Transportation PREPARED BY DESIGN DIVISION DRAWN BY: B.L.T. CHECKED BY: V.Z.	DEPARTMENT DIRECTOR Kirk T. Steudle APPROVED BY: _____ DIRECTOR, BUREAU OF FIELD SERVICES APPROVED BY: _____ DIRECTOR, BUREAU OF HIGHWAY DEVELOPMENT	MICHIGAN DEPARTMENT OF TRANSPORTATION BUREAU OF HIGHWAY DEVELOPMENT STANDARD PLAN FOR BRIDGE RAILING, AESTHETIC PARAPET TUBE			
		F.H.W.A. APPROVAL	7-10-2012 PLAN DATE	B-25-G	SHEET 1 OF 6

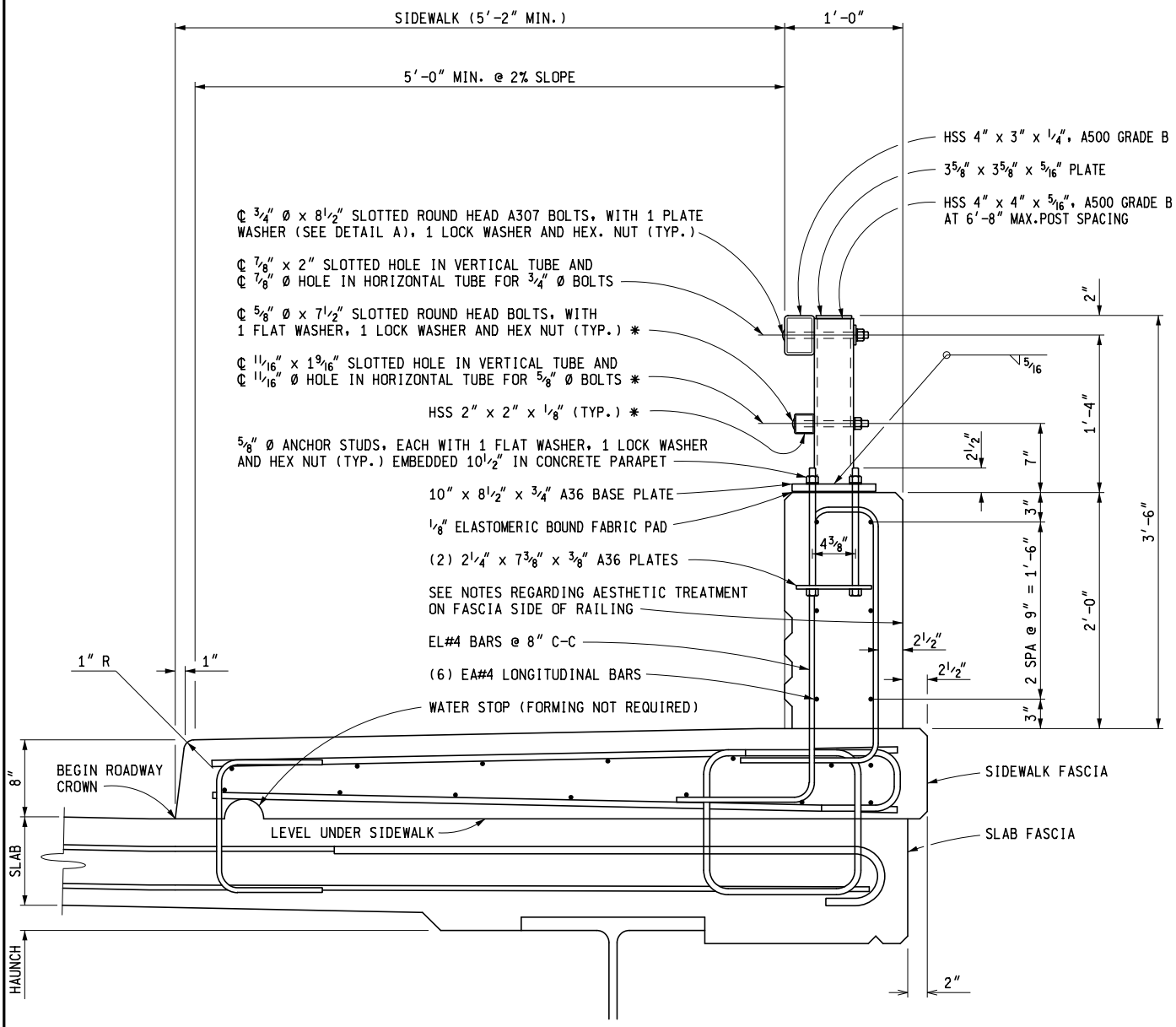

BRIDGE RAILING WITH SIDEWALK

MICHIGAN DEPARTMENT OF TRANSPORTATION
BUREAU OF HIGHWAY DEVELOPMENT STANDARD PLAN FOR

BRIDGE RAILING, AESTHETIC PARAPET TUBE

F.H.W.A. APPROVAL	7-10-2012 PLAN DATE	B-25-G	SHEET 2 OF 6

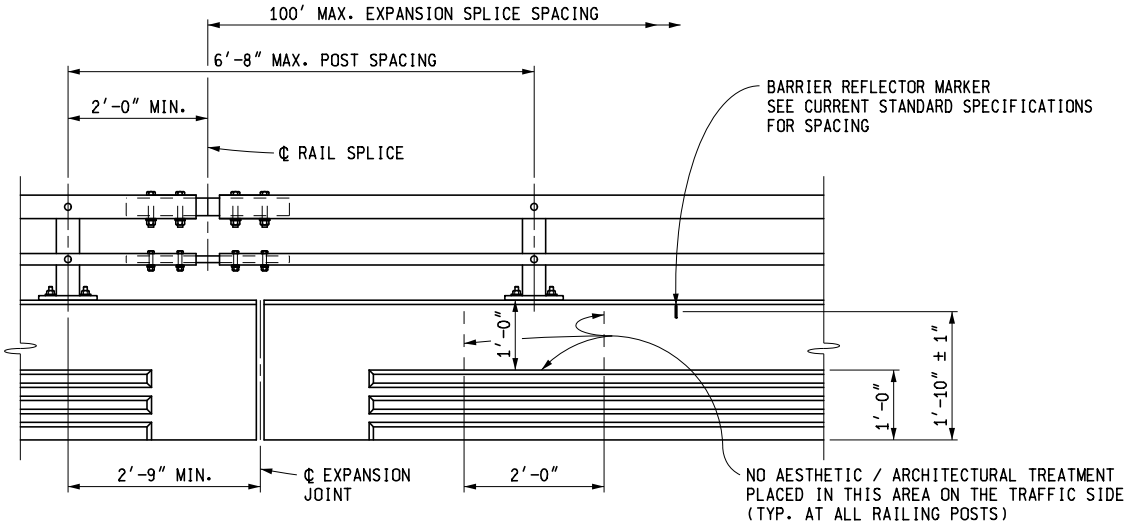

RAILING ELEVATION

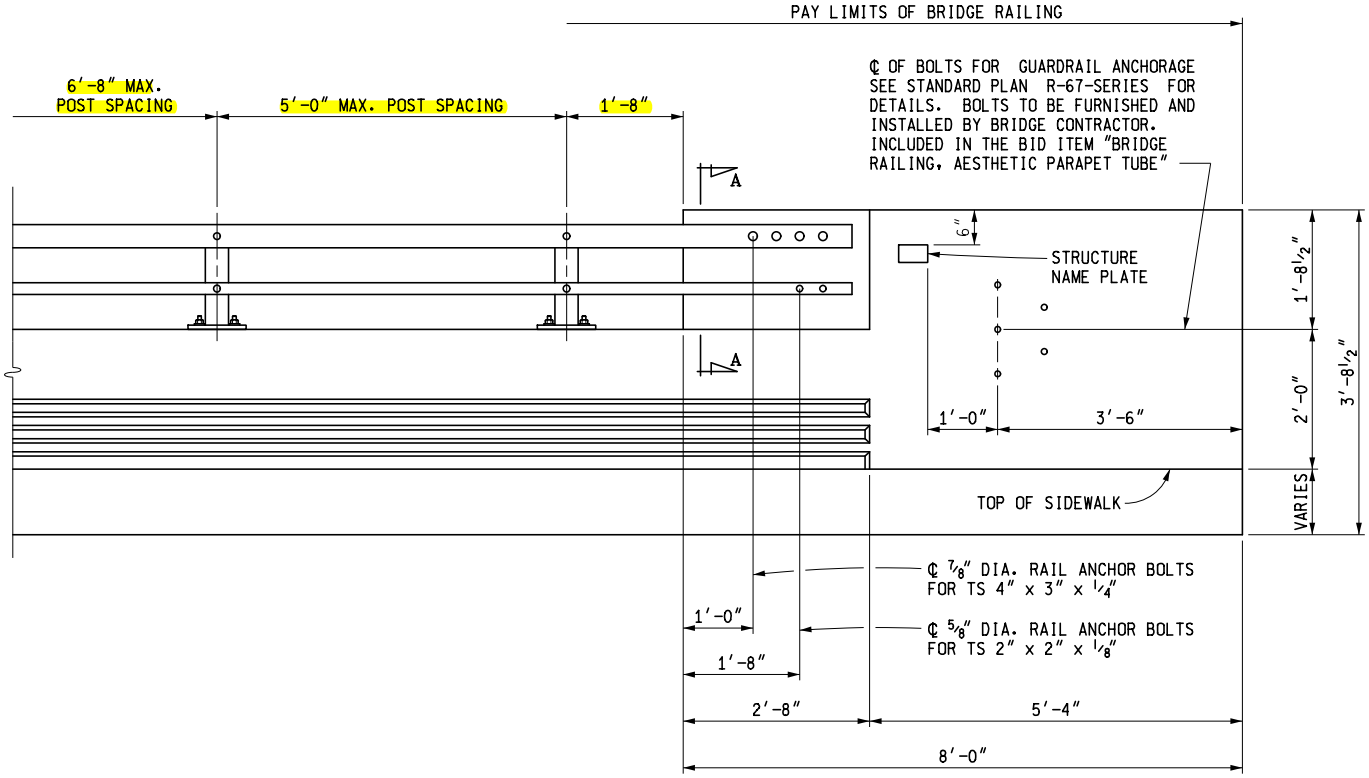

END WALL ELEVATION

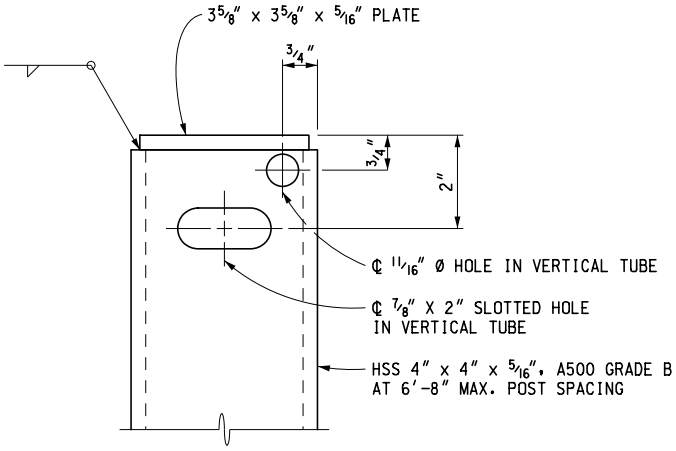

VERTICAL TUBE DETAIL
FRONT VIEW

MICHIGAN DEPARTMENT OF TRANSPORTATION
BUREAU OF HIGHWAY DEVELOPMENT STANDARD PLAN FOR

BRIDGE RAILING, AESTHETIC PARAPET TUBE

F.H.W.A. APPROVAL	7-10-2012 PLAN DATE	B-25-G	SHEET 3 OF 6

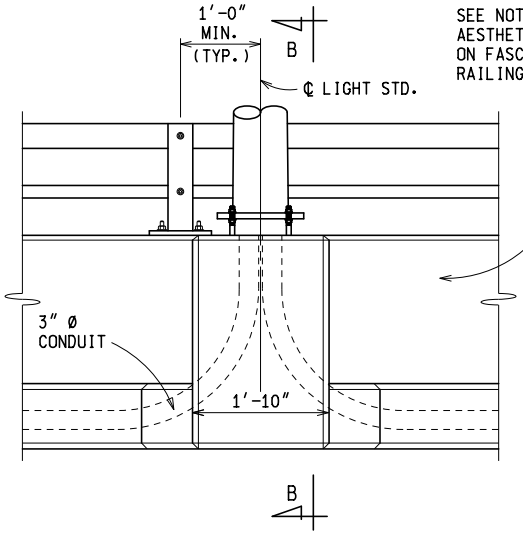

ELEVATION VIEW

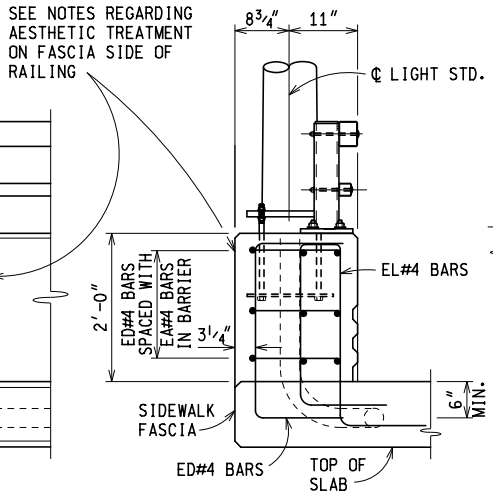

SECTION B-B

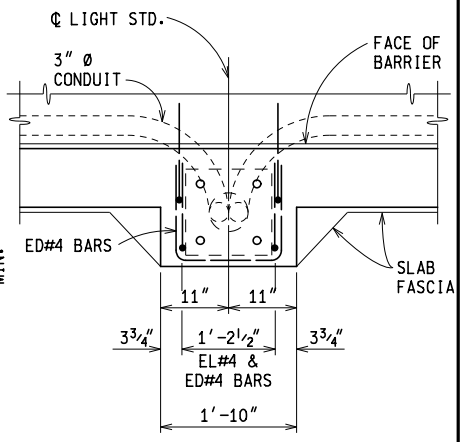

PLAN VIEW

LIGHT STANDARD DETAILS

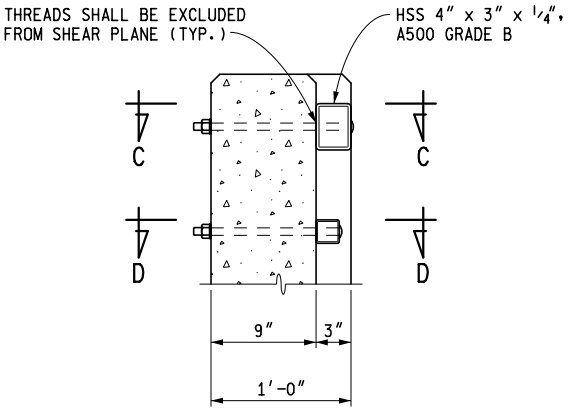

SECTION A-A

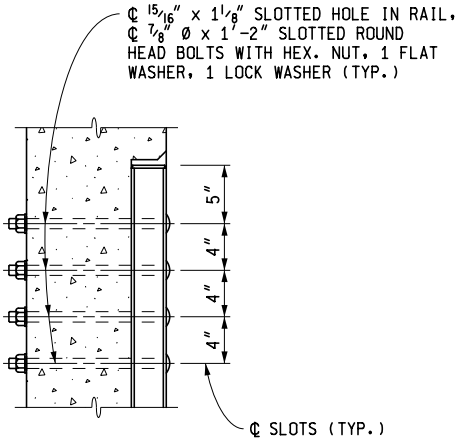

SECTION C-C

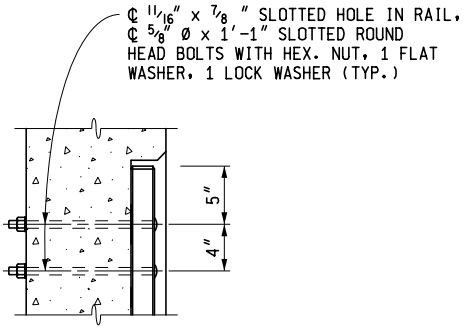

SECTION D-D

MICHIGAN DEPARTMENT OF TRANSPORTATION
BUREAU OF HIGHWAY DEVELOPMENT STANDARD PLAN FOR

BRIDGE RAILING, AESTHETIC PARAPET TUBE

F.H.W.A. APPROVAL	7-10-2012 PLAN DATE	B-25-G	SHEET 4 OF 6

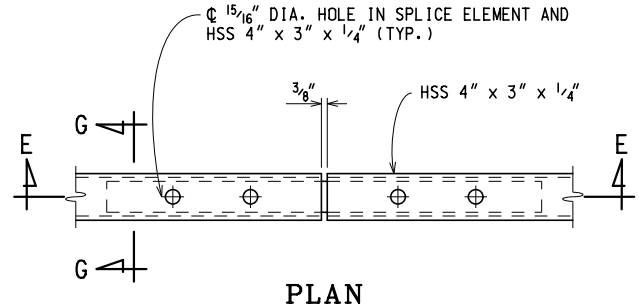

PLAN

HSS 4" x 3" x 1/4"

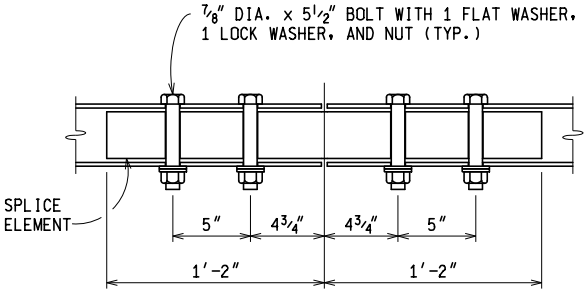

SECTION E-E

HSS 4" x 3" x 1/4"

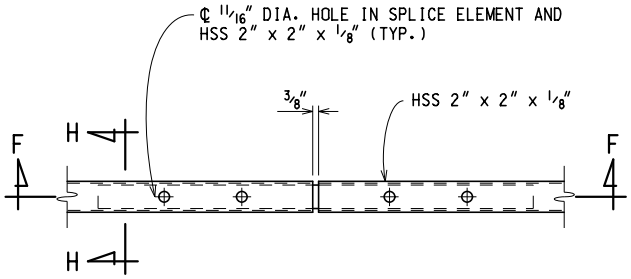

PLAN

HSS 2" x 2" x 1/8"

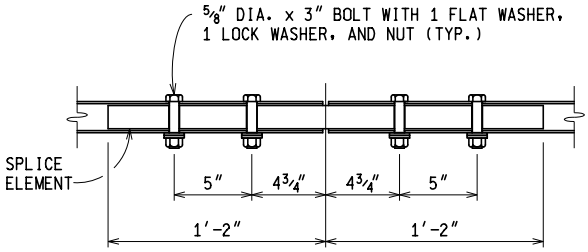

SECTION F-F

HSS 2" x 2" x 1/8"

FIXED SPLICE DETAILS

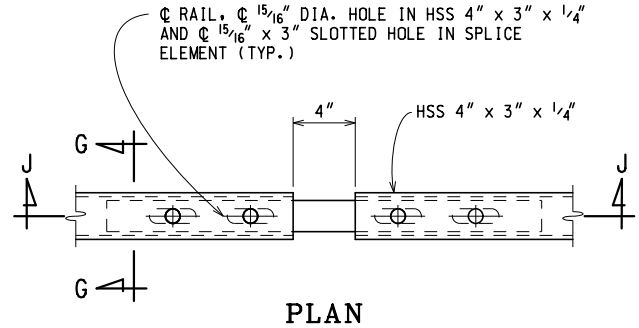

PLAN

HSS 4" x 3" x 1/4"

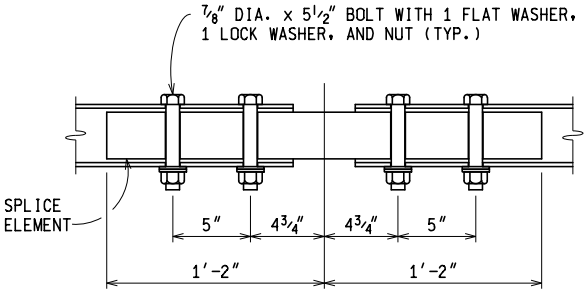

SECTION J-J

HSS 4" x 3" x 1/4"

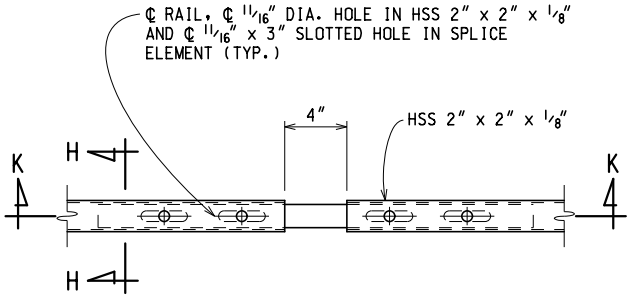

PLAN

HSS 2" x 2" x 1/8"

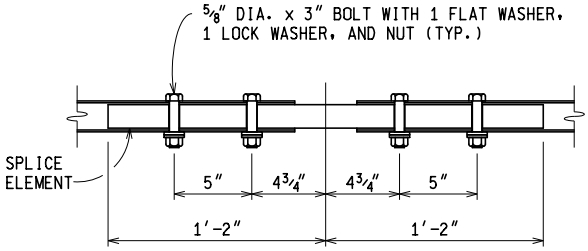

SECTION K-K

HSS 2" x 2" x 1/8"

EXPANSION SPLICE DETAILS

MICHIGAN DEPARTMENT OF TRANSPORTATION

BUREAU OF HIGHWAY DEVELOPMENT STANDARD PLAN FOR

BRIDGE RAILING, AESTHETIC PARAPET TUBE

F.H.W.A. APPROVAL	7-10-2012 PLAN DATE	B-25-G	SHEET 5 OF 6

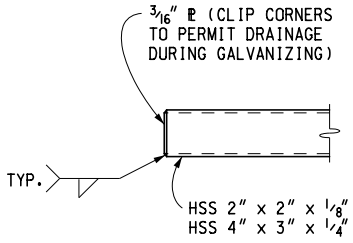

END OF RAIL

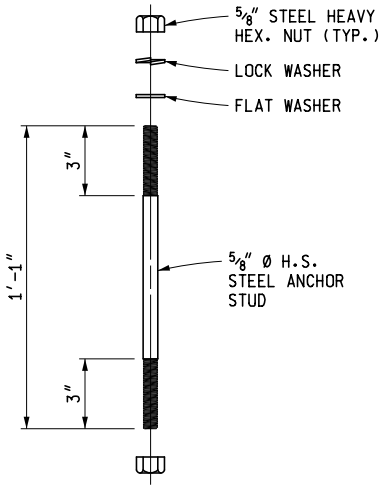

ANCHOR STUD DETAIL

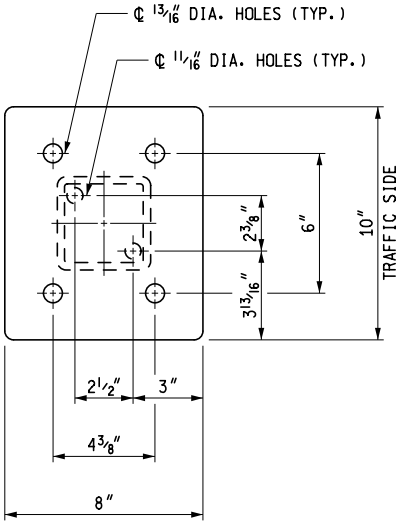

EXTERIOR BASE PLATE

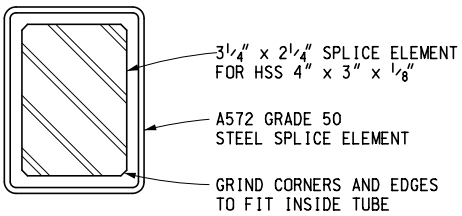

SECTION G-G

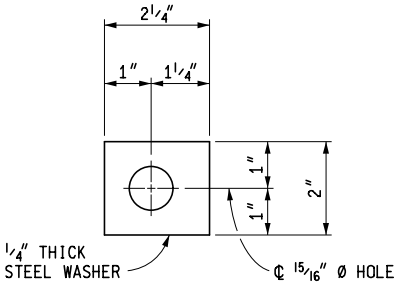

DETAIL A

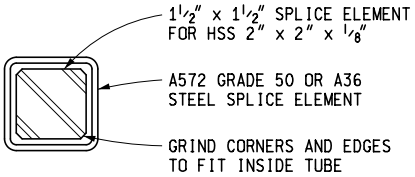

SECTION H-H

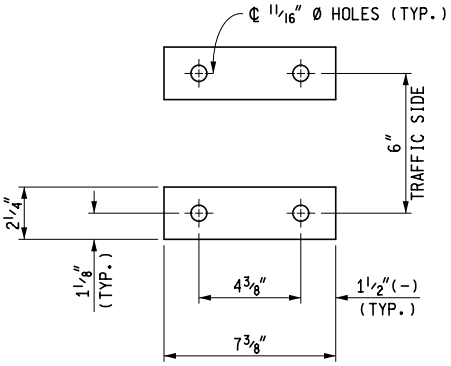

EMBEDDED ANCHOR STUD PLATES

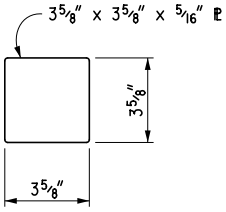

POST COVER PLATE

MICHIGAN DEPARTMENT OF TRANSPORTATION
BUREAU OF HIGHWAY DEVELOPMENT STANDARD PLAN FOR

BRIDGE RAILING, AESTHETIC PARAPET TUBE

F.H.W.A. APPROVAL	7-10-2012 PLAN DATE	B-25-G	SHEET 6 OF 6

1.02.09

Removal Sheets

Separate removal sheets should be considered depending on the type, location, and complexity of the project. Removal sheets are almost always needed for projects in congested urban areas.

An early determination should be made whether or not to include removal items on the construction plan sheets. If this would cause the plans to become cluttered and difficult to read, then separate removal sheets should be used.

The removal sheets should show all existing topography within the project limits. All items for removal will be indicated on these sheets. Once it has been determined that an item is to be removed and it has been indicated on the removal sheet, the item should no longer appear on the construction plan sheet. Slope stake lines should be shown to determine removal limits. The edges of proposed pavement or back of curb may also be beneficial in determining removals.

1.02.10 (revised 7-30-2012)

Construction Plan and Profile Sheets

A. General

Construction plan and profile sheets are the "meat" of a set of plans. Plan sheets are "overhead" maps or pictorial representations of the project to be constructed. Plan sheets indicate what items need to be removed, replaced, relocated, reconstructed, constructed, or adjusted. Plan sheets must be clear, complete, correct, and uniform to convey to the contractor how to construct the project and what materials will be needed.

If the scope of work involves a significant amount of drainage and utility renovation or removal, separate plan sheets may be required for each phase of construction (removal, utility and drainage, and construction).

1.02.10A (continued)

Profile sheets show existing elevations and proposed elevations of the finished construction project. They also show drainage details including existing and proposed ditch elevation, top of curbs, drainage structures, sewers, and other utility information. Profile sheets should also show grading information, such as front and back slopes, peat location and treatment, and excavation and embankment quantities.

Profile sheets may not be required on all projects, such as when the grade is not changing, or it is changing at a uniform rate.

B. Guidelines

1. Plan and Profile Scale

Rural Projects

Plan	1" = 200'
Profile	1" = 200' horizontal 1" = 20' vertical

Urban Projects

	Preferred	Acceptable
Plan	1" = 80'	1" = 100'
Profile	1" = 80' horizontal 1" = 8' vertical	1" = 100' horizontal 1" = 10' vertical

A scale of 1 "=40' can be used for congested areas and for detailed grades. Reduced scales, 1"=200' or smaller, can be used for staging plans, pavement markings, vicinity or drainage maps and interchange drawings so that the entire project or interchange can be shown on one plan sheet.

2. Sheet Breaks

Preferred sheet breaks are as follows:

200 Scale: 2400' per sheet (24 stations)
100 Scale: 1200' per sheet (12 stations)
80 Scale: 1000' per sheet (10 stations)
40 Scale: 500' per sheet (5 stations)

8.06.05

Pile Notes

A. Drive all piles to a nominal pile driving resistance not less than _____ kips. Determine nominal pile driving resistance (R_{ndr}) using (the FHWA Modified Gates Dynamic Formula) (dynamic test with signal matching (P.D.A. testing)) (static load tests). [Provided by MDOT C&T or Geotechnical consultant. See section 7.03.09 for values and criteria.] (8-20-2009)

B. Pile shells shall be a minimum of *____ " nominal wall thickness, **_____ " O.D. [Use with C.I.P. concrete piles.] (8-20-2009) (11-28-2011)

* 0.375" nominal thickness
0.312" nominal thickness
0.250" nominal thickness

** 16" O.D.
14" O.D.
12" O.D.

C. The estimated pile length is based on the static analysis. (8-20-2009)

D. Batter piles for Abutment(s) ____ shall be driven to a 3V:1H (2.5V :1H) batter angle. (9-18-98)

E. Steel piles shall be *_____. (8-20-2009) (11-28-2011)

* (HP 10X42) (HP 10X57) (HP 12X53) (HP 12X74) (HP 12X84) (HP 14X73) (HP 14X89)

F. Piles are to be driven to such accuracy that the ends of the piles to be embedded in the concrete are within 3" of the location shown on the plans. [Use for pile bents.]

G. Use steel for H-Piles and splices that have a yield strength not less than 50,000 psi. (8-20-2009)

8.06.05 (continued)

H. The desired pile driving sequence shall be from the center of the pile group outward in both directions or from one side of the pile group to the other side. The contractor may request Engineer approval to sequence the pile driving from the center of the pile group outward in a clockwise or counterclockwise pattern if four or more rows of piles exist. [Use for pipe piles to alleviate soil pressure from driven piles. A pile driving sequence will minimize detrimental effects of heave and lateral displacement of the ground as well as the influence the new construction has on adjacent structures.] (8-20-2009)

I. Use steel shells for CIP concrete piles that have a yield strength not less than 45,000 psi. (8-20-2009)

J. The estimated loss of nominal pile resistance due to scour after driving is _____ kips. [For information only.] (8-20-2009))

K. The estimated factored downdrag after pile driving is _____ kips. [For information only.] (8-20-2009

L. The factored pile resistance available to resist all factored loads (including the estimated factored downdrag) is equal to (50) (65) percent of nominal pile driving resistance (that is reduced by the loss due to scour). [For information only. Add downdrag and scour when appropriate. See section 7.03.09 for values and criteria.] (8-20-2009) (11-28-2011)

M. Steel piles used for pile bents are considered primary members and all welding must be in accordance with AASHTO/AWS D1.5:2010, Bridge Welding Code, as modified by the current Special Provision for Structural Steel and Aluminum Construction. (7-30-2012)

8.06.05

Pile Notes

A. All piles shall be driven to a minimum bearing capacity of ____ tons.

B. Pile shells shall be a minimum of *____ " nominal wall thickness, ____ " O.D. [Use with C.I.P. concrete piles.]

* 0.230" nominal thickness (3 gage)
0.203" nominal thickness (5 gage)

C. The estimated pile length is based on the static formula. (9-2-2003)

D. Batter piles for Abutment(s) ____ shall be driven to a 3V:1H (2.5V :1H) batter angle. (9-18-98)

E. Steel piles shall be (HP 14x73) (HP 12x53) (HP 10x42).

F. Piles are to be driven to such accuracy that the ends of the piles to be embedded in the concrete are within 3" of the location shown on the plans. [Use for pile bents.]

G. The pile driving formulas in the Standard Specifications are not to be used to determine battered pile capacity. Battered piles are to be driven to the elevation established for vertical piles. [Use when piles are driven to a 2.5V:1H batter or flatter.]

H. The desired pile driving sequence shall be from the center of the pile group outward in both directions or from one side of the pile group to the other side. The contractor may request Engineer approval to sequence the pile driving from the center of the pile group outward in a clockwise or counterclockwise pattern if four or more rows of piles exist. [Use for pipe piles to alleviate soil pressure from driven piles. A pile driving sequence will minimize detrimental effects of heave and lateral displacement of the ground as well as the influence the new construction has on adjacent structures.] (11-28-2011)

8.06.05 (continued)

I. Steel piles used for pile bents are considered primary members and all welding must be in accordance with AASHTO/AWS D1.5:2010, Bridge Welding Code, as modified by the current Special Provision for Structural Steel and Aluminum Construction. (7-30-2012)

8.06.06

Retaining Wall Notes

A. The exposed faces of the retaining walls (and abutment) shall have special architectural treatment according to Subsection 706.03 of the Standard Specifications. [Use on retaining walls and abutments connected to retaining walls where special architectural treatment is desired.] (9-18-98)

8.06.07

Steel Sheet Pile Notes

A. The substructure excavation and concrete quantities take into consideration the additional concrete and excavation necessary to excavate and pour to the Permanent Steel Sheet Piling. [Use on all projects where concrete is to be poured against Permanent Steel Sheet Piling.]

B. All sheet piling used at _____ shall be galvanized. [Specify location and use when sheet piling will be subjected to heavy chlorides or sulfates. Include Special Provision.] (9-18-98)

C. All Permanent Steel Sheet Piling shall be _____. Where allowed by the Engineer, select alternate hot rolled sheet piling with a nominal section modulus of at least _____ in^3/ft or cold rolled sheet piling with a nominal section modulus of at least _____ in^3/ft. [Specify designation and appropriate section modulus. Refer to Section 7.03.08 D. for design criteria.] (12-5-2005)

12.08.03 (continued)

B. Column Wrapping (10-24-2001) (07-30-2012)

This work consists of repairing concrete pier columns by wrapping them with a fiber reinforced polymer (FRP) wrap (see the Special Provision for Column Wrapping with Fiber Reinforced Polymer (FRP) sheets and the Michigan Department of Transportation's (MDOT) Research Report No. RC 1386, ***Repair of Corrosion-Damaged Columns using FRP Wraps*** for detailed information.)

Column wrapping should be considered as an alternate to the traditional chip, patch, and seal repair method for both square and round columns when only slight to moderate deterioration exists in the columns. Some concrete surface preparation is required prior to wrapping the column, but only to the extent necessary to obtain a flat surface. Blast cleaning, rounding corners, and patching spalls are all that is needed for the concrete surface preparation. Crack epoxy injection and concrete chipping behind steel reinforcement is not necessary. Criteria for using column wrapping in Capital Scheduled Maintenance (CSM) and Capital Preventive Maintenance (CPM) projects are as follows:

1. Column size

   No restrictions on column height. No restrictions on round column diameter. Width of rectangular columns must be limited to 3' because the wrap is not as effective in confining the mid point of the side compared with a round column.

12.08.03 B. (continued)

Substructure Repairs

2. Filler walls

   The presence of filler walls adjacent to a column prevents wrapping that portion of the column. Replacement of the adjoining portion of the filler wall decreases the cost effectiveness of the column wrapping. Filler wall replacement in conjunction with column wrapping is cost effective when the cost to replace the filler wall is small compared with the cost of column wrapping and needs to be considered on a case by case basis. Deteriorated filler walls would be cause for replacement, which would then enable column wrapping.

3. Column deterioration

   In general, column wrapping is cost effective when the deteriorated areas are between 5% and 15% of the column area. When column deterioration exceeds 5% to 10% of the column area, column wrapping has a lower life cycle cost than the traditional chip, patch, and seal repair method. For practical considerations, column wrapping should not be used when the deterioration exceeds 15% of the column area because there is a concern that the deterioration has progressed too far for the wrapping to be effective. Deterioration in this case is considered to be delaminated areas, spalled areas, and incipient corner spalls. Corner cracks without delamination should not be considered deterioration for this case.

The life cycle cost for the column wrapping and traditional chip, patch, and seal repair methods used the following service lives; 10 to 15 years for patching, 3 to 5 years of sealing, and 30 years for column wrapping. Interest rates of 3% and 4% were used for the present value calculation.