Road & Bridge Design Publications

Monthly Update – October 2012

Revisions for the month of **October** are listed and displayed below. New special details are to be included in projects submitted for the **January** letting as is stated on the special detail index sheets. Please contact Wayne Pikka (pikkaw@michigan.gov) for questions related to the road changes. Contact Vladimir Zokvic (zokvicv@michigan.gov) for questions related to the bridge changes.

Special Details

R-29-H: Driveway Openings & Approaches and Concrete Sidewalk: In regards to the 1" expansion joint in the detail "M" driveway opening at the bottom of sheet two, text was added which specifies the joint is for curb and gutter not tied to concrete pavement. Also in this sketch, the dog leg joints that off shoot from the plane of weakness joints in the gutter were also labeled "plane of weakness". On sheet three, the name of the "driveway joint details" sketch was revised to "intermediate driveway joint details". In this detail, the note regarding "W" & "B" joints was moved to the detail "M" driveway opening sketch on sheet two and the intermediate joints were labeled "W" joints.

R-31-F: Integral Curb and Integral Curb & Gutter: Longitudinal reinforcement and associated notes were removed. The note regarding reinforced pavements was removed.

Road Design Manual

Chapter One Revisions for Alignment & ROW Process Improvement changes: Revisions include a combination of DDEP and ROW Process Improvement preliminary (phase I and phase II) implementations. An introduction of new sheets and content format includes Project Information Sheet, Alignment/ROW sheets, Survey Information Sheet and Miscellaneous Estimates. Alignment information is revised to reflect new alignment definitions (Also See Chapter 14 Revisions). All alignment data and parcel information is moved from the plan sheets and ROW sheet to a new Alignment/ROW sheet. Other minor revisions and clarifications are also included.

5.20: Requirements for Final ROW Plans (for Alignment & ROW Process Improvement changes): Alignment nomenclature has been revised to reflect new alignment definitions (See Chapter 14 revisions). Some alignment annotation information formerly located on construction and removal plans has been relocated to the new Alignment/ ROW Sheet. Other miscellaneous minor revisions and clarifications are also included.

Road & Bridge Design Publications

Monthly Update – October 2012

6.03.04B11: Pavement Patching: Section was revised to allow full depth HMA patches on freeways when maintaining traffic issues are an overriding concern.

14.10, 14.12, 14.12.01, 14.17, 14.20, 14.36.01, 14.41, 14.74.01: For Alignment & ROW Process Improvement changes: New alignment concepts approved by the Engineering Operations Committee on 06/02/2011 introduces new definitions distinguishing "legal" versus "non-legal" alignments. Other minor updates and clarifications were made to reflect current concepts and practices.

Bridge Design Manual

Note: Previous changes to the manuals and guides announced through the "monthly updates" have been considered "interim" updates until a formal (hard copy) distribution has occurred. Since these hard copy distributions have ended, the prior changes have been incorporated into the Bridge Design Manual (Chapters 2, 11, & 13) with this month's updates. The remainder of the changes to this manual should be incorporated in the next month.

2.02.07, 3.02.04 B.3, C.5, C.6, C.7, 3.02.05, 11.02.01 F.1.h, 13.02.01, 13.02.03, 13.02.05: The former "Governmental and Railroad Coordination Unit" has recently split into two independent entities. The participation agreements function is now referred to as the "Governmental Coordination Unit-Development Services Division". References to the railroad coordination function are now referred to as the "Railroad Coordination Unit – Office of Rail".

7.03.01 B.4.d. (LFD & LRFD): Added requirement to use aggregate base under all bridge approach items.

7.03.01 B.4.f. (LFD & LRFD): Added use criteria/guidelines for independent backwall and 5 foot long approach slabs and sleeper slabs.

8.09.04 BB (LFD & LRFD): Updated paint system note. Systems may have two intermediate coats.

11.02.01 F.1.e, 11.02.05: Construction and Technology changed to Design Division.

11.02.01 F.1.f: Construction and Technology changed to Operations Field Services.

11.02.01 F.1.g, 11.02.04: Real Estate Division has become Development Services Division.

Road & Bridge Design Publications

Monthly Update – October 2012

Updates to MDOT Cell Library, Bridge Auto Draw Program, etc., may be required in tandem with some of this month's updates. Until such updates to automated tools can be made, it is the designer's/detailer's responsibility to manually incorporate any necessary revisions to notes and plan details to reflect these revisions.

Index to Special Details

10-22-2012

⑥

SPECIAL DETAIL NUMBER	NUMBER OF SHEETS	TITLE	CURRENT DATE
21	2	GUARDRAIL AT INTERSECTIONS	5-24-01
24	5	GUARDRAIL ANCHORED IN BACK SLOPE TYPES 4B & 4T	7-22-02
*R-29-H	4	DRIVEWAY OPENINGS & APPROACHES, AND CONCRETE SIDEWALK	10-1-12
*R-31-F	2	INTEGRAL CURB AND INTEGRAL CURB & GUTTER	10-22-12
R-41-G	2	LONGITUDINAL PAVEMENT JOINTS	4-9-12
R-42-F	6	TYPICAL JOINT LAYOUTS FOR CONCRETE PAVEMENT	12-6-10
R-43-I	2	LOCATION OF TRANSVERSE JOINTS IN PLAIN CONCRETE PAVEMENT	2-8-12
R-45-I	2	PAVEMENT REINFORCEMENT FOR BRIDGE APPROACH	12-6-11
R-54-H	4	CONCRETE BARRIER, SINGLE FACE	5-18-12
R-80-E	8	GRANULAR BLANKETS, UNDERDRAINS, OUTLET ENDINGS & BULKHEADS	6-13-12
R-99-B	2	CHAIN LINK FENCE WITH WIRE ROPE	11-1-00
R-100-G	4	SEEDING AND TREE PLANTING	8-13-12
R-126-I	5	PLACEMENT OF TEMPORARY BARRIER	3-26-12

*** Denotes New or Revised Special Detail to be included in projects for (beginning with) the January letting.**

Note: Former Standard Plans IV-87, IV-89, IV-90, and IV-91 Series, used for building cast-in-place concrete head walls for elliptical and circular pipe culverts, are now being replaced with plans that detail each specific size. The Municipal Utilities Unit will provide these full sized special details for inclusion in construction plans for MDOT jobs. To assure prompt delivery, requests ***must*** be made in advance.

Former Standard Plans IV-93 and IV-94 series have been replaced with precast concrete box & three-sided culverts as per the 2012 Standard Specifications for Construction.

Index to Bridge Detail Sheets

10-22-2012

⑦

DETAIL NUMBER	NUMBER OF SHEETS	TITLE	CURRENT DATE
B-21-I	4	BRIDGE RAILING, 2 TUBE	6-3-11
B-23-E	4	BRIDGE RAILING, THRIE BEAM RETROFIT	10-19-09
B-25-G	6	BRIDGE RAILING, AESTHETIC PARAPET TUBE	7-10-12
EJ3Z	1 or 2	EXPANSION JOINT DETAILS	6-8-11
EJ4M	1 or 2	EXPANSION JOINT DETAILS	6-8-11
PC-2G	1	70" PRESTRESSED CONCRETE I-BEAM DETAILS	3-31-06
PC-4E	1	PRESTRESSED CONCRETE 1800 BEAM DETAILS	3-31-06
PC-1L	1	PRESTRESSED CONCRETE I-BEAM DETAILS	7-12-06

*** Denotes New or Revised Special Detail to be included in projects for (beginning with) the January letting.**

Note: Details EJ3Z & EJ4M are interactive, i.e. designers and detailers choose details based upon railing type and angle of crossing. Place all details appropriate for the project, structure specific information, and the Expansion Joint Device quantity on the sheet. The sheet shall then be added to the plans as a normal plan sheet.

Detail PC-1L, PC-2G and PC-4E shall have structure specific information and quantities added to the sheet. The sheet shall then be added to the plans as a normal plan sheet.

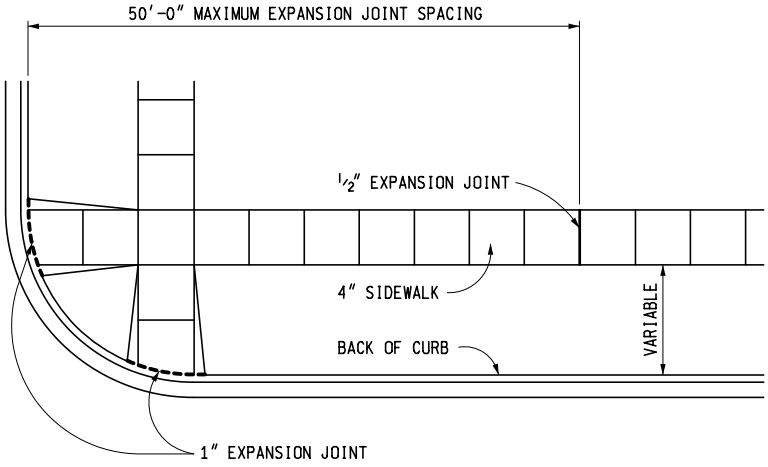

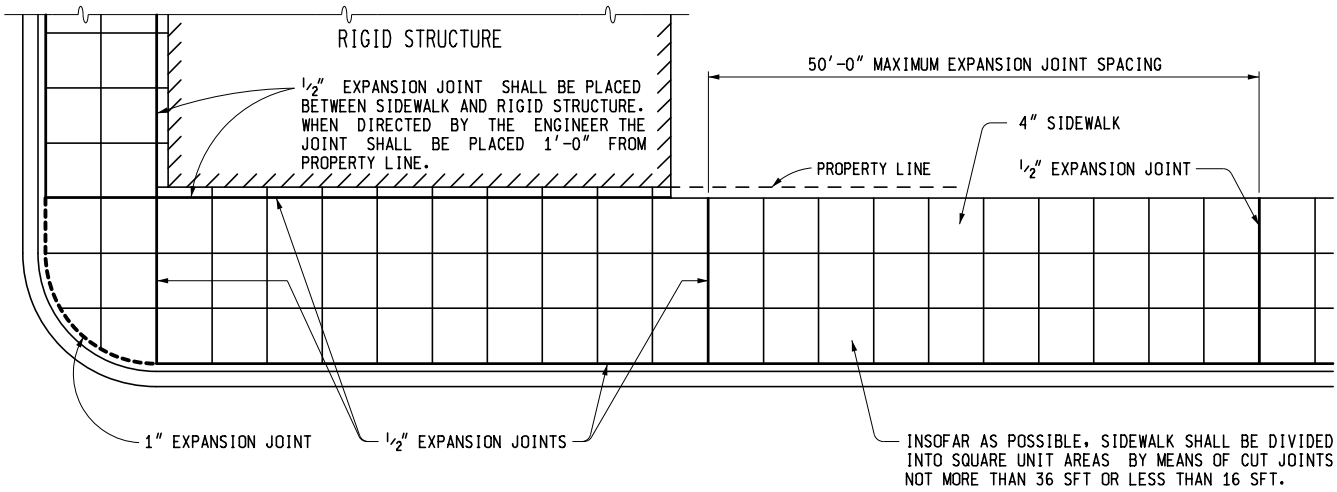

LOCATION OF JOINTS IN CONCRETE SIDEWALK

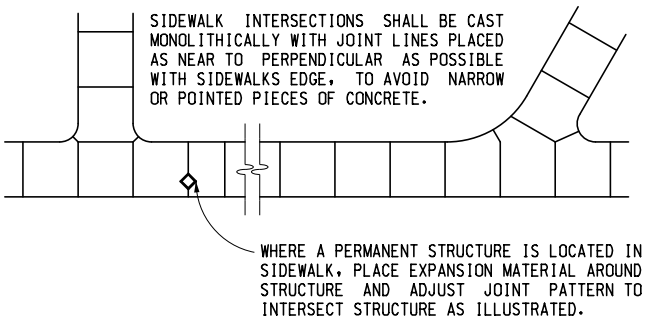

TYPICAL SIDEWALK JOINT LAYOUTS

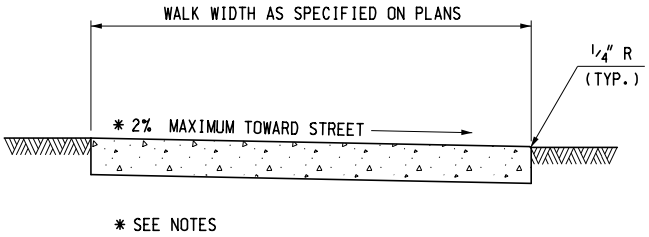

4″ CONCRETE SIDEWALK

MDOT Michigan Department of Transportation

PREPARED BY DESIGN DIVISION

DRAWN BY: B.L.T.

CHECKED BY: W.K.P.

DEPARTMENT DIRECTOR
Kirk T. Steudle

APPROVED BY: _____
DIRECTOR, BUREAU OF FIELD SERVICES

APPROVED BY: _____
DIRECTOR, BUREAU OF HIGHWAY DEVELOPMENT

MICHIGAN DEPARTMENT OF TRANSPORTATION
BUREAU OF HIGHWAY DEVELOPMENT STANDARD PLAN FOR

DRIVEWAY OPENINGS & APPROACHES, AND CONCRETE SIDEWALK

F.H.W.A. APPROVAL	10-1-2012 PLAN DATE	R-29-H	SHEET 1 OF 4

NOTE:
W = MINIMUM WIDTH OF THICKENED CONCRETE SIDEWALK.
(R - d) SHALL NOT BE LESS THAN DRIVEWAY WIDTH.

THE "R" DIMENSION IS SPECIFIED IN THE PUBLICATION "ADMINISTRATIVE RULES REGULATING DRIVEWAYS, BANNERS AND PARADES ON OR OVER HIGHWAYS".

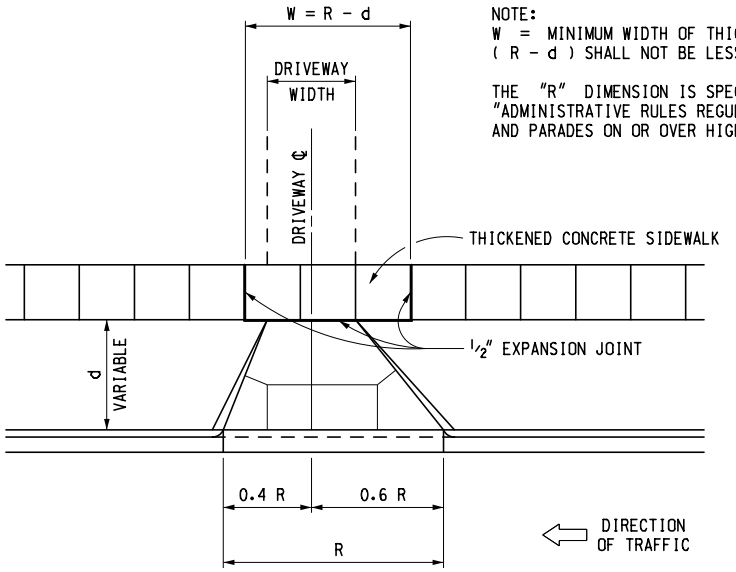

CONCRETE DRIVEWAY OPENING LAYOUT

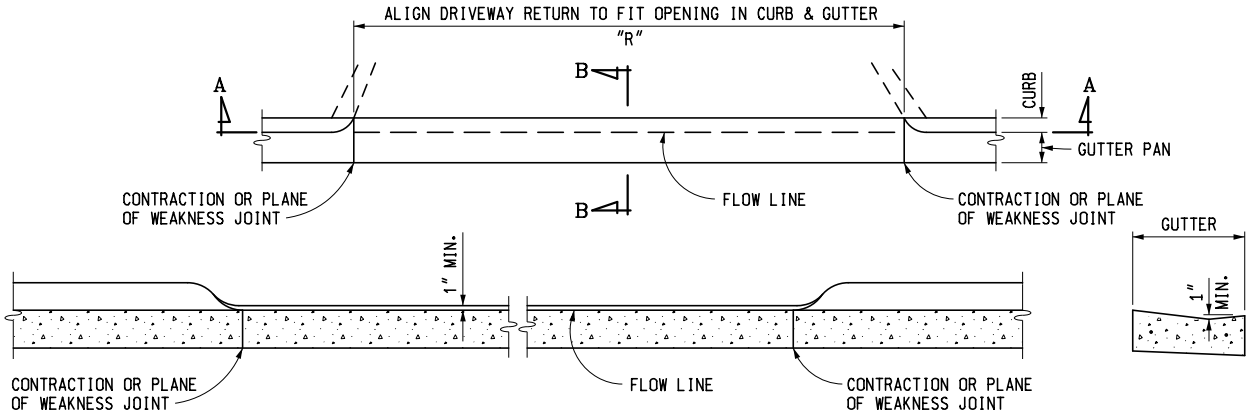

SECTION A - A

SECTION B - B

CONCRETE DRIVEWAY OPENING, DETAIL L

** TO FRONT EDGE OF GUTTER PAN

*** USE "W" JOINT IF THE DRIVEWAY AND CURB ARE POURED MONOLITHICALLY OR SYMBOL "B" JOINT IF THEY ARE POURED IN STAGES.

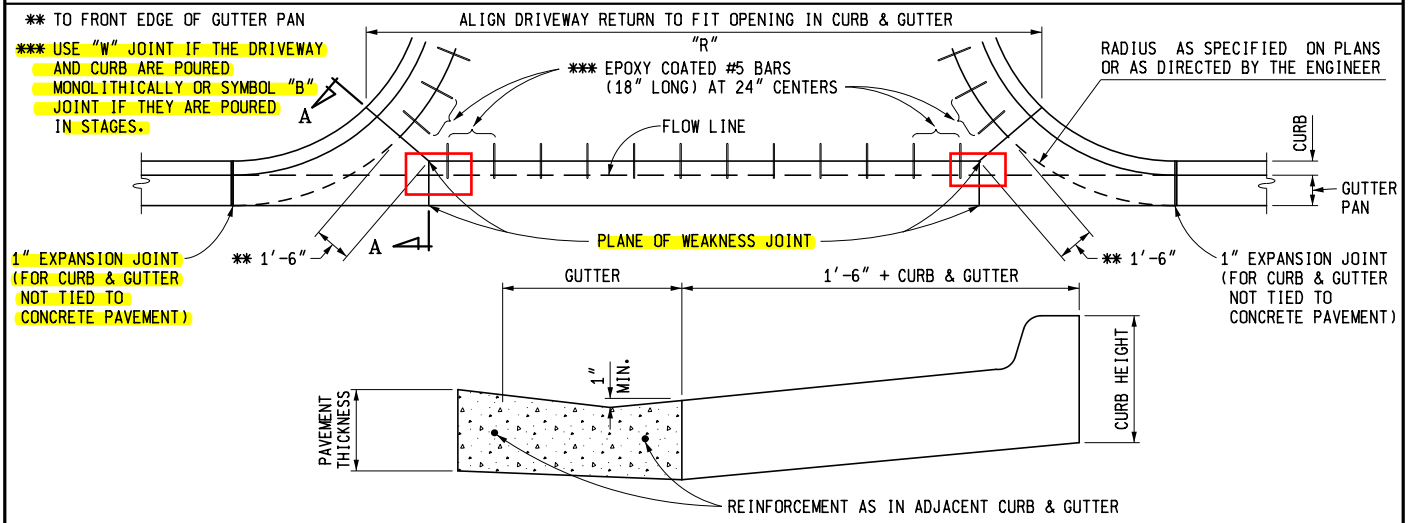

SECTION A - A

CONCRETE DRIVEWAY OPENING, DETAIL M

NOTE:
FOR ROADWAYS WITH CONCRETE PAVEMENTS, LONGITUDINAL LANE TIES WILL BE CONTINUOUS THROUGH THE DRIVEWAY OPENING AND THE SPACING OF THE #5 BARS IN CONCRETE DRIVEWAYS SHALL BE ADJUSTED TO AVOID CONFLICT WITH THE LONGITUDINAL LANE TIES.

MICHIGAN DEPARTMENT OF TRANSPORTATION
BUREAU OF HIGHWAY DEVELOPMENT STANDARD PLAN FOR

DRIVEWAY OPENINGS & APPROACHES, AND CONCRETE SIDEWALK

F.H.W.A. APPROVAL	10-1-2012 PLAN DATE	R-29-H	SHEET 2 OF 4

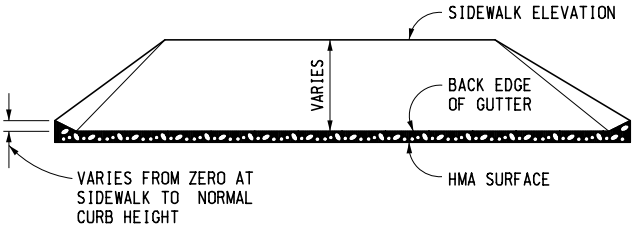

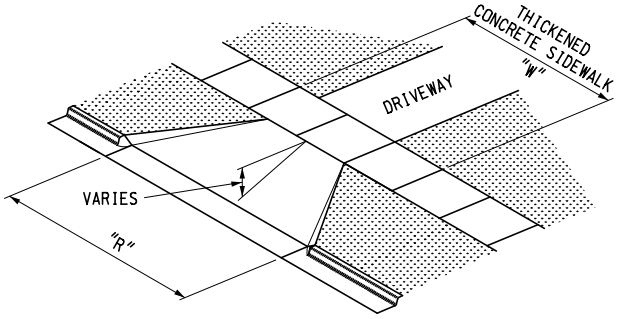

HMA DRIVEWAY APPROACH

(TO BE USED WITH DETAIL L)

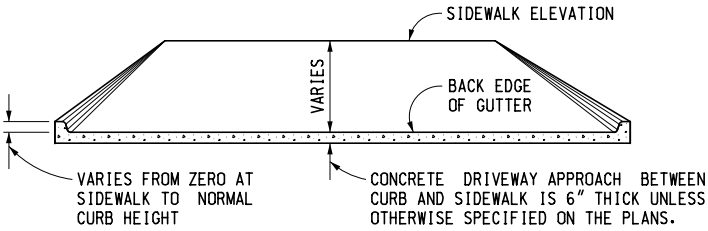

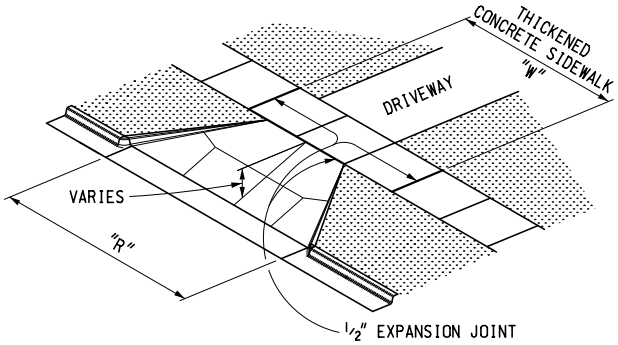

NOTES:

MONOLITHIC CURB IS INCLUDED IN THE CONCRETE DRIVEWAY APPROACH QUANTITY.

REINFORCEMENT IS NOT REQUIRED UNLESS SPECIFIED ON THE PLANS. WHEN REINFORCEMENT IS SPECIFIED, SEE CHART ON THIS SHEET.

CONCRETE DRIVEWAY APPROACH

(TO BE USED WITH DETAIL L OR M)

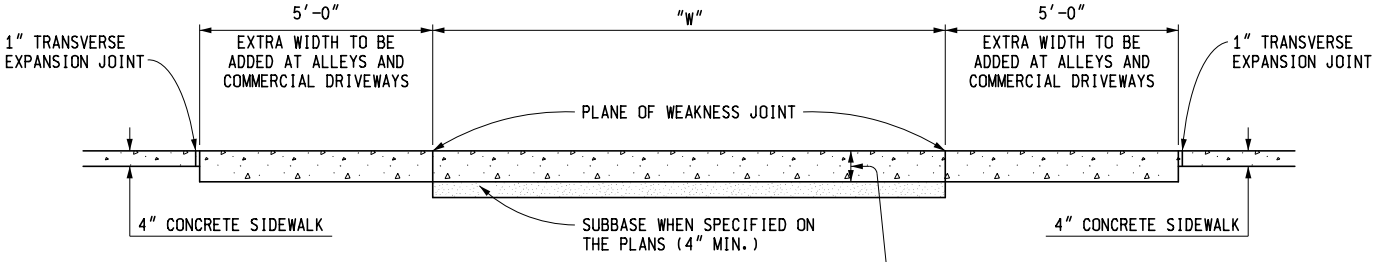

WHEN CONCRETE DRIVEWAY APPROACH IS SPECIFIED, THE THICKENED CONCRETE SIDEWALK THICKNESS IS EQUAL TO THE THICKNESS OF THE CONCRETE DRIVEWAY APPROACH. WHEN HMA DRIVEWAY APPROACH IS SPECIFIED, THE THICKENED CONCRETE SIDEWALK THICKNESS IS 6" MIN.

THICKENED CONCRETE SIDEWALK

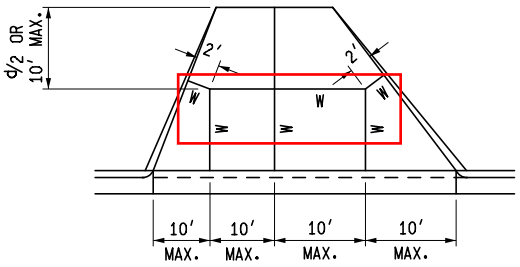

ADJUST DRIVEWAY JOINTS AS NEEDED TO ALIGN WITH ANY COINCIDING TRANSVERSE PAVEMENT JOINTS.

JOINT LAYOUT IS AS INDICATED OR AS DIRECTED BY THE ENGINEER.

INTERMEDIATE DRIVEWAY JOINT DETAILS

REINFORCEMENT FOR CONCRETE DRIVEWAYS		
CONCRETE DRIVEWAY THICKNESS	WIRE SIZE (6" x 6" MESH)	AVERAGE WEIGHT (LBS/100 SFT)
LESS THAN 8"	W1.4	21
	W2.9	42
8" OR GREATER	USE WIRE FABRIC REINFORCEMENT SPECIFIED ON STANDARD PLAN R-37-SERIES	

MICHIGAN DEPARTMENT OF TRANSPORTATION

BUREAU OF HIGHWAY DEVELOPMENT STANDARD PLAN FOR

DRIVEWAY OPENINGS & APPROACHES, AND CONCRETE SIDEWALK

F.H.W.A. APPROVAL	10-1-2012 PLAN DATE	R-29-H	SHEET 3 OF 4

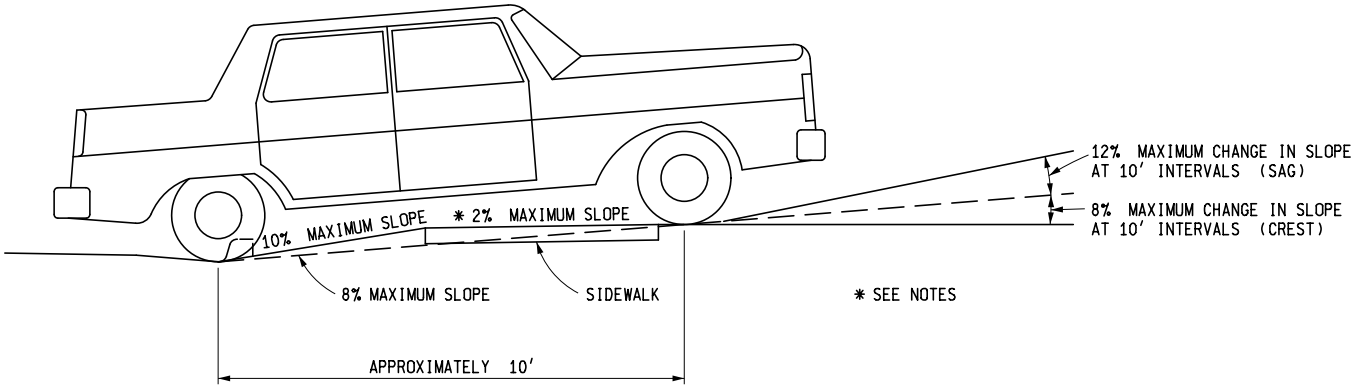

LOW VOLUME COMMERCIAL OR RESIDENTIAL DRIVEWAY SLOPES

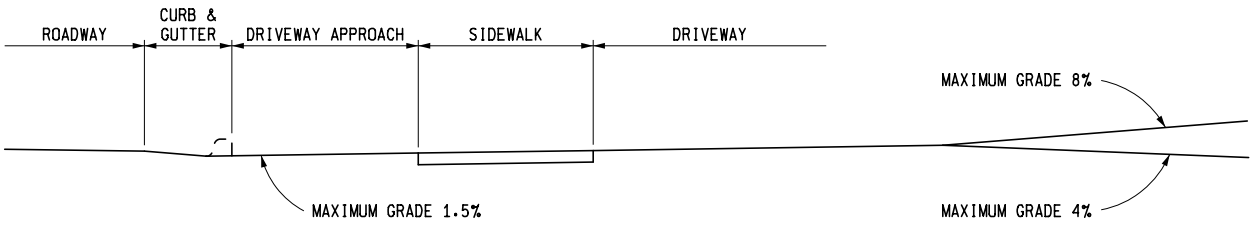

COMMERCIAL DRIVEWAY PROFILE FOR MAJOR TRAFFIC GENERATORS

NOTES:

FOR DRIVEWAY DESIGN REFER ALSO TO "ADMINISTRATIVE RULES REGULATING DRIVEWAYS, BANNERS, AND PARADES ON OR OVER HIGHWAYS" AND GEOMETRIC DESIGN G-680-SERIES, COMMERCIAL DRIVEWAYS.

FOR CURB AND GUTTER DETAILS, SEE STANDARD PLAN R-30-SERIES.

TRANSVERSE SIDEWALK SLOPES ARE TYPICALLY 1.5% OR 2% MAXIMUM. IN ORDER TO MEET SITE CONDITIONS, IF THE TRANSVERSE SLOPE IS REQUIRED TO BE LESS THAN 1.5%, LONGITUDINAL DRAINAGE MUST BE PROVIDED.

WHEN SETTING GRADES FOR COMMERCIAL DRIVES, THE TYPES OF VEHICLES USING THE DRIVE SHOULD BE CONSIDERED.

MICHIGAN DEPARTMENT OF TRANSPORTATION
BUREAU OF HIGHWAY DEVELOPMENT STANDARD PLAN FOR

DRIVEWAY OPENINGS & APPROACHES, AND CONCRETE SIDEWALK

F.H.W.A. APPROVAL	10-1-2012 PLAN DATE	R-29-H	SHEET 4 OF 4

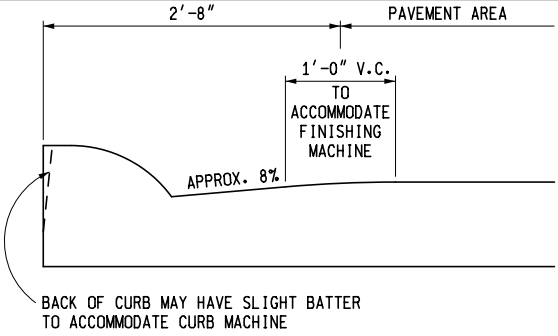

SECTION A - A

INTEGRAL CURB & GUTTER, DETAIL B

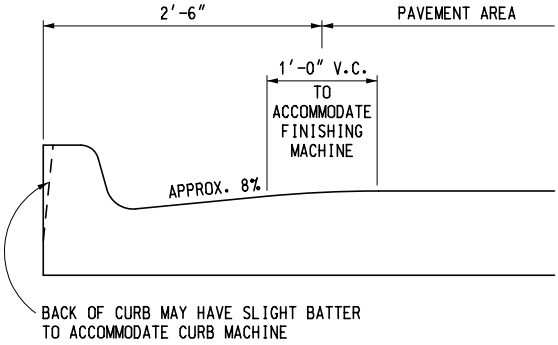

SECTION A - A

INTEGRAL CURB & GUTTER, DETAIL C

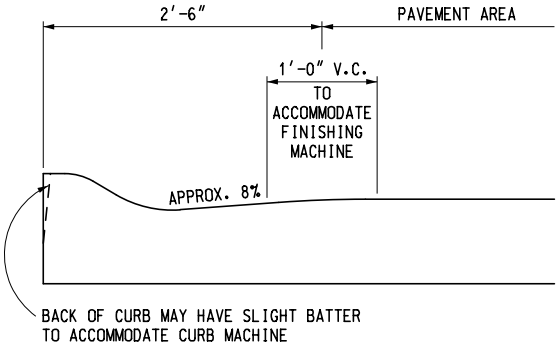

SECTION A - A

INTEGRAL CURB & GUTTER, DETAIL D

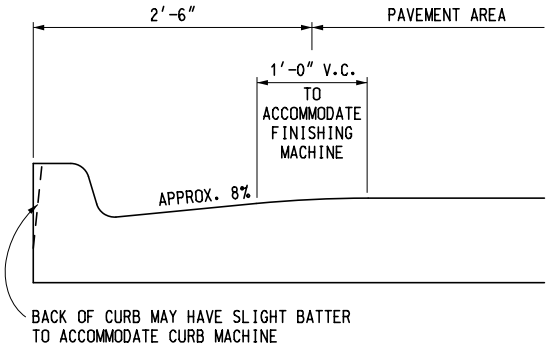

SECTION A - A

INTEGRAL CURB & GUTTER, DETAIL F

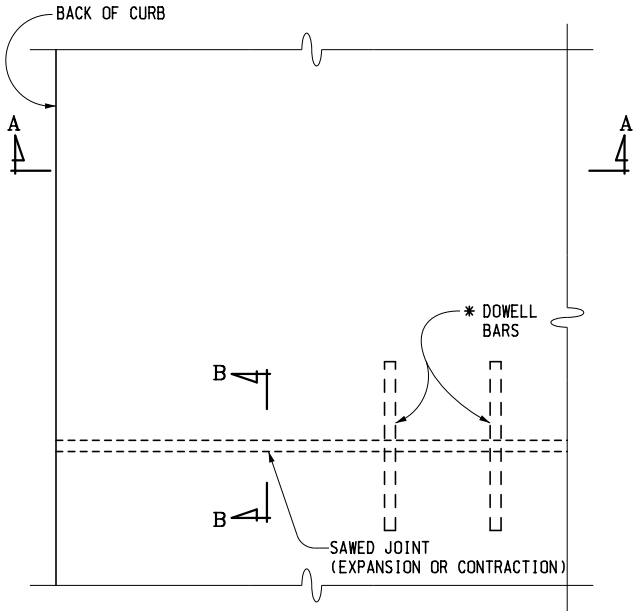

* END DOWELL BARS AT V.C. BEFORE GUTTER PAN.

PLAN AT TRANSVERSE JOINT

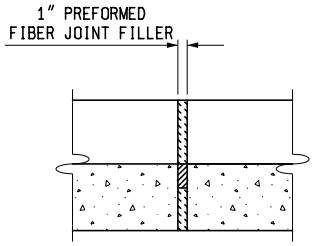

SECTION B - B

EXPANSION JOINT

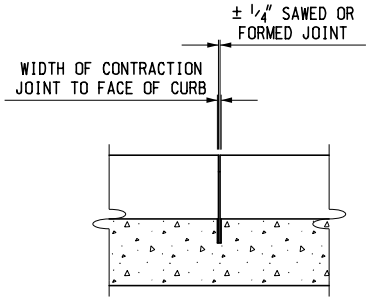

SECTION B - B

CONTRACTION JOINT

MDOT Michigan Department of Transportation

PREPARED BY DESIGN DIVISION

DRAWN BY: B.L.T.

CHECKED BY: W.K.P.

DEPARTMENT DIRECTOR
Kirk T. Steudle

APPROVED BY: _____
DIRECTOR, BUREAU OF FIELD SERVICES

APPROVED BY: _____
DIRECTOR, BUREAU OF HIGHWAY DEVELOPMENT

MICHIGAN DEPARTMENT OF TRANSPORTATION
BUREAU OF HIGHWAY DEVELOPMENT STANDARD PLAN FOR

INTEGRAL CURB AND INTEGRAL CURB & GUTTER

F.H.W.A. APPROVAL	PLAN DATE		SHEET
	10-22-2012	R-31-F	1 OF 2

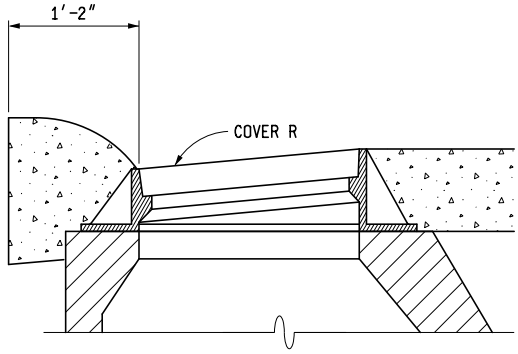

SECTION C - C

INTEGRAL CURB & GUTTER, DETAIL B

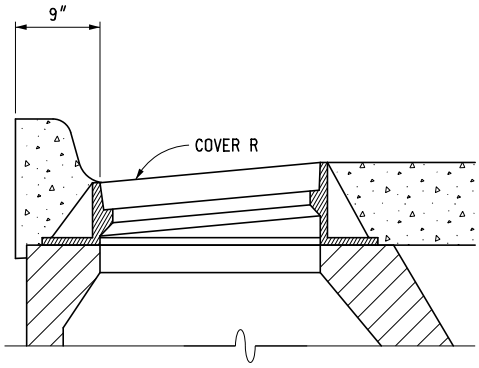

SECTION C - C

INTEGRAL CURB & GUTTER, DETAIL C

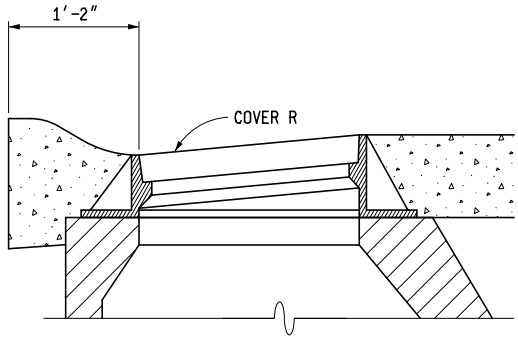

SECTION C - C

INTEGRAL CURB & GUTTER, DETAIL D

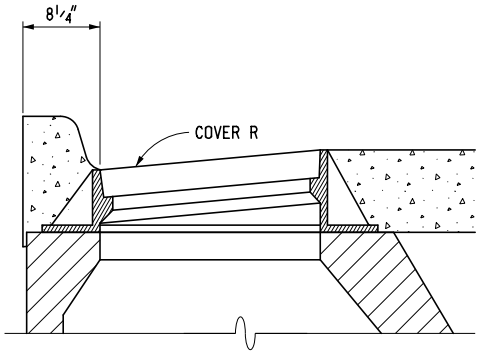

SECTION C - C

INTEGRAL CURB & GUTTER, DETAIL F

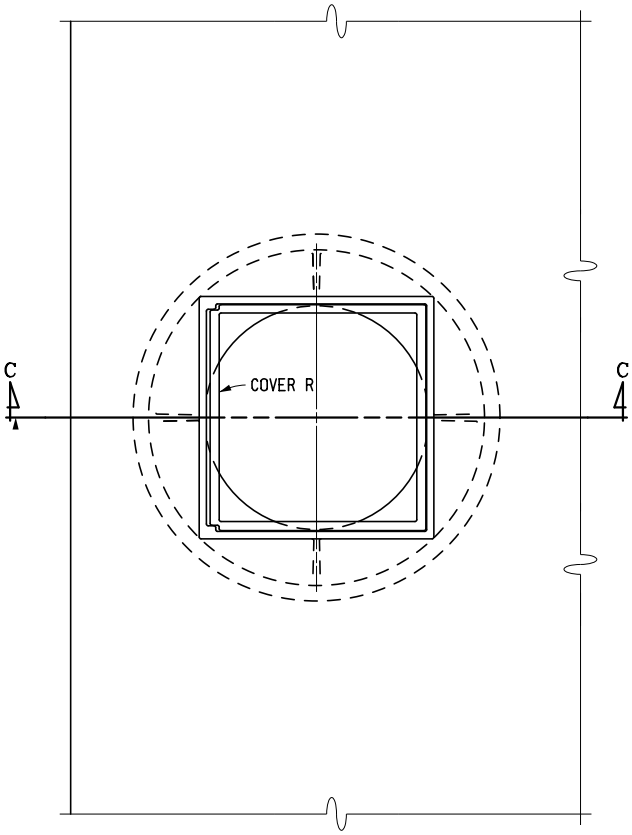

PLAN IN CATCH BASIN AREA

SEE STANDARD PLAN R-37-SERIES FOR REINFORCING DETAILS

NOTES:

DETAILS OF CURB FACES ARE SPECIFIED ON STANDARD PLAN R-30-SERIES.

WHEN THE CURB PORTION IS POURED SEPARATE FROM THE INTEGRAL PAVEMENT AND GUTTER, AND DELAY EXCEEDS 30 MINUTES, EPOXY COATED #4 VERTICAL BARS SPACED AT 1'-0" CENTER TO CENTER SHALL BE USED TO TIE CURB AND UNDERLYING CONCRETE.

AGGREGATE BASE, WHEN SPECIFIED ON TYPICAL CROSS SECTIONS, SHALL EXTEND 2'-0" BEYOND THE BACK OF INTEGRAL CURB AND GUTTER, EVEN IF THE GRADING SECTION MUST BE WIDENED TO DO SO. NO PAYMENT WILL BE MADE FOR THE ADDITIONAL AGGREGATE BASE THAT IS REQUIRED TO CONSTRUCT THE INTEGRAL CURB AND GUTTER ALTERNATE.

TRANSVERSE JOINTS IN THE INTEGRAL CURB SHALL BE AS SPECIFIED ON THIS STANDARD PLAN.

FIBER FILLER USED FOR PAVEMENT EXPANSION JOINTS SHALL EXTEND TO BACK OF CURB.

CATCH BASIN "COVER R" OR OTHER APPROVED COVERS SHALL BE SUBSTITUTED FOR COVERS SPECIFIED ON THE PLANS ONLY WHEN THE INTEGRAL CURB AND GUTTER ALTERNATE IS USED.

MICHIGAN DEPARTMENT OF TRANSPORTATION

BUREAU OF HIGHWAY DEVELOPMENT STANDARD PLAN FOR

INTEGRAL CURB AND INTEGRAL CURB & GUTTER

F.H.W.A. APPROVAL	10-22-2012 PLAN DATE	R-31-F	SHEET 2 OF 2

MICHIGAN DESIGN MANUAL
ROAD DESIGN

CHAPTER 1

INDEX

PLAN PREPARATION

1.01 DEVELOPMENT METHODS

1.01.01 References

1.01.02 General

1.01.03 Survey and Mapping Methods

1.02 PLAN SHEETS

1.02.01 Title Sheet
- A. Project Location
- B. Traffic Data
- C. Project Identification
- D. Length and Type of Work
- E. Consultant Identification

1.02.02 Project Information Sheet
- A. Utilities
- B. Notes Applying to Standard Plans
- C. Index

1.02.03 Vicinity Maps

1.02.04 Drainage Maps

1.02.05 Typical Cross Sections
- A. Stationing
- B. Scale
- C. Notes, Charts, Legends & Conventions
- D. Existing Typical Cross Section

1.02.06 Miscellaneous Details

1.02.07 Note Sheet

1.02.08 Miscellaneous Estimates

1.02.09 Legend Sheets

1.02.10 Survey Information Sheet

1.02.11 Alignment/ROW Sheets

CHAPTER 1 PLAN PREPARATION INDEX (continued)

1.02.12 Removal, Construction Plan, and Profile Sheets
- A. Removal
- B. General
- C. Guidelines
  1. Plan and Profile Scale
  2. Sheet Breaks
  3. Information
  4. Sheet Orientation and Stationing
- D. Quantities

1.02.13 Interchange Ramp Plan and Profile

1.02.14 Crossroad Plan and Profile

1.02.15 Detail Grades
- A. General
- B. Guidelines

1.02.16 Maintaining Traffic/Stage Construction

1.02.17 Signing Plans

1.02.18 Pavement Marking Plans

1.02.19 Miscellaneous Plans

1.02.20 Log of Borings

1.02.21 Special Details

1.03 MISCELLANEOUS

1.03.01 Order of Plan Sheets

1.03.02 Lettering, Notes, Conventions

1.03.03 Critical Path Method (CPM)

1.03.04 Roadway Cross Section

1.04 LOG PROJECTS

1.04.01 Preparing a Log Project

1.04.02 Earth Disturbances

CHAPTER 1

PLAN PREPARATION

1.01

DEVELOPMENT METHODS

1.01.01 (revised 11-28-2011)

References

A. Geometric Design Guides - Design Division

B. Guidelines for Plan Preparation – Design Division

C. ***Michigan Manual of Uniform Traffic Control Devices,*** Current Edition

D. Standard Plans and Special Details – Design Division

E. ***Standard Specifications for Construction,*** Current Edition

Existing plans for a recent project, similar in nature to the proposed project, are an excellent reference.

1.01.02 (revised 11-28-2011)

General

This chapter provides the information and details necessary to prepare a set of plans. The plans should contain all the information essential for bidding and constructing the project. Although innovation and creativity are encouraged in the preparation of plans, the importance of general uniformity must be emphasized. Plans should be adaptable to the diverse requirements of the Design Division and Construction Field Services Division. At the same time the plans should be a functional reference, familiar to the users. A general format should be followed by all Designers.

1.01.03 (revised 10-22-2012)

Survey and Mapping Methods

The choice between a ground survey, an aerial survey, a laser scanning survey, or a combination depends in part on the type and length of project, the information required, and the time schedule.

Some projects may not require a survey or may require only a minor pick up survey. Old plans are valuable sources of information on these projects.

Refer to Chapter 14, Procedures for Plan Preparation, for more information on surveys and mapping.

1.02

PLAN SHEETS

1.02.01 (revised 10-22-2012)

Title Sheet

The location map shown on the title sheet will generally be obtained from either county or city maps which are available in ProjectWise in the Reference Documents. For a particular project, a suitable map or section of one is chosen and incorporated on a standard title sheet cell. Because first impressions often sell the product, the title sheet should be neat in appearance and layout

1.02.01 (continued)

Title Sheet

A. Project Location

The project should be located on the map and the limits (P.O.B. Stationing and P.O.E. Stationing) outlined to clearly show and stand out from the rest of the map. The map should be oriented with north to the top of the sheet and with a north arrow shown near the map.

The map must show the entire project limits and other features that will easily identify the location. Preferably, at least two trunklines, names of major cross roads, and an incorporated city or village, township, and county should be shown on the location map. The town, range and section numbers should also be shown on the map.

The point of beginning and the point of ending should be identified by control section, physical reference, job number, stationing, and control section mileposts. Station equations and stationing of major cross roads should also be shown.

The location map should also show bridge numbers, railroad crossing numbers, and railroad companies within the project limits for both existing and proposed crossings. Detour routes, if applicable, should be shown.

1.02.01 (continued)

B. Traffic Data

Existing year traffic data and projected 20 year traffic data should be located on the upper left part of the title sheet. Flex ESAL's and Rigid ESAL's should be shown below the traffic data. Pertinent counts including ADT, DHV, percent commercial, and the year taken are shown in tabular form. For freeway projects, the commercial DDHV should also be listed. These counts are usually present counts and projected counts. Counts are obtained from the Bureau of Transportation Planning (see Chapter 14 of this manual).

The design speed and posted speed should also be shown. If the design speed changes within a project, show the various limits by stationing, cross roads, or mile points.

C. Project Identification

The following format should be used for identifying projects:

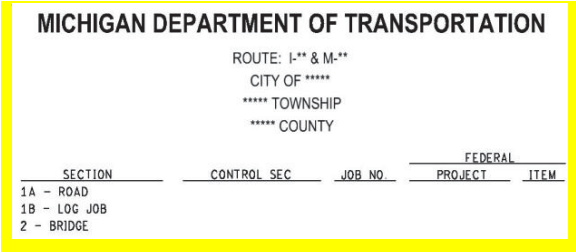
MICHIGAN DEPARTMENT OF TRANSPORTATION

ROUTE: I-** & M-**
CITY OF *****
***** TOWNSHIP
***** COUNTY

SECTION	CONTROL SEC	JOB NO.	FEDERAL PROJECT	FEDERAL ITEM
1A - ROAD				
1B - LOG JOB				
2 - BRIDGE				

For filing and reference purposes, both the control section and job numbers should be shown in the appropriate blocks on the right-hand margin and in the bottom margin. If the project has multiple job numbers, show them in the title block. Projects with multiple control sections should show the major control section (as programmed) first with others following in parentheses.

1.02.01 (continued)

Title Sheet

D. Length and Type of Work

The length of the project, in hundredths of a mile, and the type of work should be shown in the bottom of the approval block.

Example:

1.02.01 (continued)

E. Consultant Identification

If plans are being prepared by a consulting firm (prime consultant), their logo and professional engineer's seal and signature should appear in a block above the approval block in the lower right corner. The length and type of work would then be shown above the consultant information. Sub-consultants must have their logo on the sheets they are responsible for, however, signatures are not required.

If plans are being designed primarily by MDOT, but with some consultant work, the consultant must sign each sheet they are responsible for when their extent of work on the project is ten sheets or less. If the work is greater than ten sheets, the consultant must sign the first sheet and state that they are responsible for sheet #'s __ through __.

1.02.02 (added 10-22-2012)

Project Information Sheet

The purpose of the Project Information Sheet is to show, in a convenient location, the Utilities, Notes Applying to Standard Plans, and the Plan Index. See Section 1.03.01 for the order of plan sheets.

Information on the Project Information Sheet should be project specific, current, and complete.

A. Utilities

The preliminary utility list should be prefaced with and followed by the standard notes that best fit the project.

The preliminary utilities list should be from: a current survey, old plans, or the information retrieval system. It should be updated to the current date. Utility information can also be obtained from the field review section, the utility section, or the Region/TSC Utility/Permit Engineer. The final utility list shall be from the Region/TSC Utility/Permit Engineer.

The list should include the name and address of the utility, the type of utility, and a contact person, listing a phone number and address if available.

B. Notes Applying to Standard Plans

Current standard plans and special details that are applicable to the project are listed on the Project Information Sheet. Special details called for on the note sheet must also be physically attached to the construction plans. See Section 1.03.01 for the order of plan sheets.

1.02.02 (continued)

C. Index

The index is generally located on the right side of the Project information sheet. Plan sheets should be arranged in the order as shown in Section 1.03.01. The index should show only the sheets included in the project. If bridges are included in the project (package project) they would be indexed "Part II - Bridge Plans" under the road sheets which would be referenced "Part I - Road Plans".

Standard plans are engineering drawings showing standard details of various construction items which present the current policies of MDOT and are approved for repetitive use. The Department's Road and Bridge Standard Plans are produced in the Standards Unit of the Quality Assurance Section of the Design Division. In order for these drawings to become Standard Plans, they must first be approved by MDOT Administrators and have FHWA approval. The approved drawings are then made available on the MDOT Web site.

During the time these plans are being processed for approval, they are often included in the construction plans as special details.

Even though these plans are labeled "Standard Plan" in the title block, they are still considered special details when included in the construction plans. Do not change the “standard plan” label to “special detail” or remove the plan number and/or plan date on these plans. Special details are also available on the MDOT Web site.

1.02.03

Vicinity Maps

A vicinity map may be required for projects on new locations or if right-of-way will be required. The map may be drawn to any recognized scale which is at least 750 scale (1"=750'), that permits showing the entire project on one plan sheet, whenever possible. A scale smaller than 750 scale is not recommended because of its inability to display detail.

The vicinity map should show the centerline, right-of-way limits, and important topographic features such as: county roads, city limits, lakes, rivers, railroads, drainage courses, etc. The map should also show section corners, 1/4 corners, section numbers and lines, and the township and range. A north arrow should always be included.

.

1.02.04 (revised 11-28-2011)

Drainage Maps

The drainage map should show ditch lines using arrows to show the direction of flow, culverts, bridges, etc., for both existing and proposed conditions. Drainage structure sizes, both upstream and downstream, should also be shown. Show all county drains within the project limits.

When a drainage course is a county drain, it should be indicated on the plans and drainage sheet. If the survey does not indicate the information, check with the MDOT Drainage Coordinator (Supervising Engineer – Utilities, Drainage & Roadside Section) in the Design Division

An additional drainage sheet may be required on urban projects showing existing sewers and structures. Upon completion of the drainage design, proposed sewers, structures, and their quantities may be added to this sheet.

The drainage map should also include the following items or information:

- The direction of flow for all existing and proposed ditches, drains, sewers and culverts
- North Arrow
- Names of streets, highways, county roads, railroads, rivers, etc.
- Outline of the proposed road
- Tabulation of drainage data for all culverts 30” or greater in diameter
- Drainage districts

For small or intermediate sized culverts the tabulation only needs to include design runoff and the drainage area. Drainage areas which are equal to or greater than 2 square miles require a more elaborate tabulation. (See ***MDOT Drainage Manual*** Section 5.3.4 for information on this tabulation.)

1.02.05 (revised 10-22-2012)

Typical Cross Sections

Typical cross sections are included in plans to give a graphic display of the existing and proposed cross sections of the roadway. They also describe to the contractor where each typical section will apply. All integral parts of the roadway and the roadbed should be shown including: subbase, base, surfacing, shoulders, slopes, medians, barriers, curbs, gutters, ditches, sidewalks, and so forth.

A. Stationing

Only the alignment required to construct the project should be shown. Stationing should be continuous with no overlaps or gaps. Stationing for superelevated sections should include the superelevation transitions. Each different condition that cannot readily be shown on one typical section should have its own section. Stationing, where that section applies, should be shown under the section. An overall Right of Way dimension shall be included. The designer should ensure that the entire project has an appropriate typical cross section.

B. Scale

Typical cross sections should be drawn to scale with the vertical scale exaggerated for clarity. Show the scale (horizontal and vertical) in the title block.

For horizontal dimensions, use decimals, not feet and inches (only for fractional dimensions, example 12’ not 12.00’; 2.5’ not 2’-6”; 2.67’ not 2’-8”). Vertical dimensions are typically in inches (example 18” not 1’-6” or 1.5’).

1.02.05 (continued)

C. Notes, Charts, Legends, & Conventions

Typical section notes should be placed on the lower right corner of the first typical cross section sheet.

The HMA application chart shall be shown on the first typical cross section sheet which has an HMA section. This chart shall include: the HMA mix, the rate of application, the performance grade, and remarks.

The concrete joint legend shall be shown on only the first concrete typical cross section sheet. All concrete typical sections should indicate the location and type of longitudinal joints required.

D. Existing Typical Cross Section

Often, a separate existing typical cross section is needed to show the existing conditions and removals.

When the existing conditions are incorporated into the proposed cross section, they may be shown with dashed lines.

Typical sections should show pavement and shoulder slopes and grading or subbase slopes. Also, show existing and proposed crown point location.

1.02.06 (added 10-22-2012)

Miscellaneous Details

Occasionally, a miscellaneous detail may need to be added to address a special item or treatment on a project. The drawing is placed in the construction plans with the miscellaneous detail sheets. See Section 1.03.01 for the order of plan sheets.

1.02.07 (revised 10-22-2012)

Note Sheet

The purpose of the Note Sheet is to show, in a convenient location, the General Notes applying to the project. See Section 1.03.01 for the order of plan sheets

1.02.08 (revised 10-22-2012)

Miscellaneous Estimates

The miscellaneous estimates section is for listing all pay items that do not appear elsewhere in the plans. This estimate usually includes the following items:

- Contractor Staking
- Concrete and HMA Quality Initiative
- Project Cleanup
- Erosion and Sedimentation Control Items
- Slope Restoration Items
- Subgrade Correction Items
- Maintaining Traffic Items
- Pavement Joints
- Pavement Markings and Signs if separate sheets are not part of the plans

Items are not limited to those shown above nor are these items always shown on the miscellaneous estimate sheet. If pay items can conveniently and clearly be shown on the plans, there is no need to include them in the miscellaneous estimate sheet.

Quantities shown in the miscellaneous estimate area should be separated by job number and local participation, when applicable. If a project includes several Act 51 participating cities, a column for quantities in each city will be necessary.

1.02.09

Legend Sheets

The legend sheet shows all the standard symbols and conventions used in the plans. These include symbols for drainage, utilities, real estate, topography, paving and removals. A separate legend sheet can be included in most major projects, however, the necessary information can also be shown on construction plan sheets and/or removal sheets. If the legend crowds or clutters the plan sheets, a separate legend sheet would be in order.

1.02.10 (revised 10-22-2012)

Survey Information Sheet

Beginning with Datum Notes, this sheet lists bench marks and horizontal control points, with witnesses and coordinates. Horizontal alignment points (P.C., P.I., P.T., and P.O.T.) found or set by the surveyor and government corners are also included.

1.02.11 (revised 10-22-2012)

Alignment/ROW Sheets

An Alignment/ROW sheet should be incorporated with the plan set.

The Alignment/ROW sheet should show the following:

- All alignments pertinent to the project: existing legal and proposed construction. Alignments station-referenced to the Public Land Survey System, Section, Township and Range, showing the PLSS corners with bearing and distance ties to the intersections of the alignments and the government lines. These ties shall only appear on the Alignment/ROW Sheets within the plan set.
- ROW lines dimensioned from the legal alignment from which the lines were established.
- Curve data for all project alignments shall be shown on the Alignment/ROW sheet only. Curve data shall be placed once, on the Alignment/ROW sheet on which the curve's P.I. is located.
- Subdivision plat information shall be shown on the Alignment/ROW sheets, as well as on the Removal and Construction sheets.
- MDOT parcel numbers and property boundary information shall be shown on the Alignment/ROW sheets only.
- Proposed Right of Way dimensions
- Coordinates for ROW Monuments, P.I.'s, P.C.'s, and P.T.'s
- North Arrow

1.02.12 (revised 10-22-2012)

Removal, Construction Plan, and Profile Sheets

A. Removal

Separate Removal Sheets should be considered depending on the type, location, and complexity of the project. Removal Sheets are almost always needed for projects in congested urban areas.

An early determination should be made whether or not to include removal items on the construction plan sheets. If this would cause the plans to become cluttered and difficult to read, then separate Removal Sheets should be used. The Removal Sheets should show all existing topography within the project limits.

All items for removal will be indicated on these sheets. Once it has been determined that an item is to be removed and it has been indicated on the Removal Sheet, the item should no longer appear on the construction plan sheet. Slope stake lines should be shown to determine removal limits. The edges of proposed pavement or back of curb may also be beneficial in determining removals.

Subdivision plat information shall be shown on the Removal Sheets.

The Removal Sheets shall only show the alignment required to construct the project.

1.02.12

B. General

Construction plan and profile sheets are the "meat" of a set of plans. Plan sheets are “overhead” maps or pictorial representations of the project to be constructed. Plan sheets indicate what items need to be removed, replaced, relocated, reconstructed, constructed, or adjusted. Plan sheets must be clear, complete, correct, and uniform to convey to the contractor how to construct the project and what materials will be needed.

P.C., P.I., and P.T. Station labels shall be shown for the alignment required to construct the project.

If the scope of work involves a significant amount of drainage and utility renovation or removal, separate plan sheets may be required for each phase of construction (removal, utility and drainage, and construction).

Profile sheets show existing elevations and proposed elevations of the finished construction project. They also show drainage details including existing and proposed ditch elevation, top of curbs, drainage structures, sewers, and other utility information. Profile sheets should also show grading information, such as front and back slopes, peat location and treatment, and excavation and embankment quantities.

Profile sheets may not be required on all projects, such as when the grade is not changing, or it is changing at a uniform rate.

1.02.12 (continued)

Removal, Construction Plan, and Profile Sheets

C. Guidelines

1. Plan and Profile Scale

Rural Projects

Plan	1" = 200'
Profile	1" = 200' horizontal 1" = 20' vertical

Urban Projects

	Preferred	Acceptable
Plan	1" = 80'	1" = 100'
Profile	1" = 80' horizontal 1" = 8' vertical	1" = 100' horizontal 1" = 10' vertical

A scale of 1"=40' can be used for congested areas and for detailed grades. Reduced scales, 1"=200' or smaller, can be used for staging plans, pavement markings, vicinity or drainage maps and interchange drawings so that the entire project or interchange can be shown on one plan sheet.

2. Sheet Breaks

Preferred sheet breaks are as follows:

200 Scale: 2400' per sheet (24 stations)
100 Scale: 1200' per sheet (12 stations)
80 Scale: 1000' per sheet (10 stations)
40 Scale: 500' per sheet (5 stations)

1.02.12C (continued)

3. Information

Plan sheets should include the following, except for the noted items which may be shown on separate sheets.

1. North orientation arrow.
2. City limits.
3. Township, range, and section.
4. Existing pavement description including width and type (indicate limits of milling or surfacing).
5. ROW, (existing and proposed) including cross roads.
6. Slope stake lines.
7. House numbers on urban projects and rural projects, if available.
8. Property owners names on rural projects, when available.
9. Existing drainage, direction of flow, size, and type of all existing culverts and sewers.
10. Pay items and leaders to specific work types.
11. "This Sheet" quantity listings shall include only items that are not included elsewhere on the sheet.
12. Detail of guardrail installation(s).
13. Existing utilities – NOTE: Flag all gas, oil & underground electric power lines as "hazardous or flammable material". Flag all underground telephone, water transmission, and fiber optics as "caution critical underground utility". All other underground private and municipal utilities should be shown in standard line coding with the type of utility, size, type of pipe (if known) and flow arrows (if applicable). Generally, overhead utilities (excluding overhead high voltage transmission lines) are not shown on the plans, unless these utilities are in the vicinity of structures such as bridges or culverts where cranes are in operation.
14. Existing Driveways.
15. Streets and Crossroads - name, width, surface, etc.
16. Soil survey boundaries identified with soil series.

1.02.12C (continued)

Removal, Construction Plan, and Profile Sheets

Profile sheets shall show the following when applicable:

1. Proposed plan and ditch grade (include curb grades).
2. Type lines (showing front slope, back slope, ditch information, superelevation, and transitions, etc.)
3. Crossroad or street profiles
4. Sidewalk profiles and/or top of curb grade profiles.
5. Existing ground profile and ground points - side profiles.
6. Vertical Curves
   a. K-value
   b. P.I. station and curve length
7. Tangent Grades.
8. Temporary roads.
9. Water table information
10. Rock, peat, muck, undercut locations, and treatments.
11. Cross culverts
12. Existing and proposed underground utilities (sewer, water, telephone, electrical, pipelines, etc.).
13. Existing drainage structures and pipes - dashed lines.
14. Proposed drainage structures and sewers - solid lines.
15. Proposed flow line elevations to nearest hundredths of a foot.
16. Existing (surveyed) flow line elevations to nearest hundredths of a foot. Estimated existing flow lines should be shown to the nearest tenth of a foot.
17. Earthwork limits and quantities.
18. Other miscellaneous quantities.
19. Station equations.

1.02.12C (continued)

Profile sheets should reference the alignment required to construct the project or plan grade profile line showing both existing grade and proposed grade. Side profiles should also be indicated, usually a set distance left and right of the alignment, i.e., 30 feet left and 30 feet right. Rural projects would use the side profiles to plot existing and proposed ditch grades; urban projects to indicate top of curb grades or sometimes gutter or sidewalk grades. Rural projects also usually include ground points at even stations and usually 100 feet left and right of centerline. These points give the designer an indication of the lay of the land in the project area but certainly do not replace the need for cross sections.

4. Sheet Orientation and Stationing

Plan sheets should be set up to avoid breaking at important design features such as interchanges, intersections, or curves starting or ending at the beginning or end of a sheet. Sheets on curves should be angled to produce a balanced sheet; the tangent sections should be near the center of the plan sheet.

Stationing should be from left to right, should not be overlapped sheet to sheet, and should be the same as the profile stationing. Plan and profile stationing should ideally begin and end with a station multiple of 300 feet (e.g. station 3+00 or 6+00). Stations will be based on hundreds of feet. Each “tick” mark is identified as follows: 1+00, 2+00, 3+00, etc. Numbers to the left of the “+” will be in hundreds of feet and numbers to the right of the "+" will be in feet. Alignments will be "ticked" every one hundred feet and labeled at 500 foot intervals.

1.02.12 (continued)

Removal, Construction, and Profile Sheets

D. Quantities

Pay items, pay units, and estimated number of units are shown on the construction plan and profile sheets.

Construction quantities can be shown by individual notes, in tabular form as quantities per sheet, or a combination of both methods. Important items to remember when placing quantities on the plan and profile sheets

1. Use the proper (correct) pay items. Pay items should agree with the special provisions, supplemental specifications, standard specifications, and the pay item code book.

2. Use the correct pay units from the same sources as above. Various pay items have more than one unit of measure. The designer is to use judgement to decide which unit of measure is best for the situation.

3. Pay items should be included in only one place on plan and profile sheets, i.e., if pay items are shown by note and leader they should not also appear in the "quantities this sheet" compilation.

4. All quantities should be computed and checked for accuracy.

5. All information required to construct the pay item must appear in its proper location and meet all policies, procedures, standards, and guidelines established by MDOT, FHWA, AASHTO, and other agencies. Guardrail installations, where length, location, and offsets are extremely important, are an excellent example of the need for complete information.

6. Agency Participation, if applicable.

1.02.12D (continued)

Quantities generally shown on the plan sheet or the plan portion of a plan and profile sheet include:

- Removals and adjustments (if separate removal sheets are not included).
- Pavement and surfacing quantities including curb, curb and gutter, valley gutter, shoulders, sidewalks, etc.
- Guardrail and median barrier.
- Erosion control item locations.
- Sewers, drainage structures, culverts and other utility alterations.
- Driveway and approach treatments.

Profile sheets generally will include quantities for earthwork such as:

- Earth excavation
- Embankment
- Subbase
- Peat excavation and swamp backfill
- Topsoil stripping

1.02.13 (revised 10-22-2012)

Interchange Ramp Plan and Profile

Each interchange ramp should be shown on a separate plan and profile sheet(s). The format for ramp sheets is the same as those for mainline plan and profile sheets.

Care should be exercised in setting the grades on ramps, especially where the ramp, the mainline, and the crossroad are close together or connected. Detail grades of the gore area are always needed. Detail grades for crossroad intersection are sometimes necessary to ensure proper grades. (See Section 1.02.15.)

1.02.14 (revised)

Crossroad Plan and Profile

If a project involves extensive work on crossroads, including relocation or changes in elevation, separate plan and profile sheets should be included for the crossroads. Again mainline plan and profile guidelines should be followed when setting up crossroad plan and profile sheets.

Particular care should be exercised at intersections of crossroads and trunklines. Grades should be set to favor the through roadway, usually the trunkline, but a smooth ride from the crossroad across the trunkline should also be considered. Detail grades are very useful in determining good grades through intersections and their use should always be considered when reconstructing major intersections, especially in urban areas. (See Section 1.02.15.)

1.02.15 (revised 10-22-2012)

Detail Grades

A. General

Detail grades are exaggerated drawings that help the designer to set good grades through problem areas. Detail grades should be considered whenever two roadways intersect on a project with grade changes. Problem areas may include ramps merging with or diverging from the mainline, gore areas, ramp intersections with crossroads, mainline and crossroad intersections, major driveways, auxiliary lanes, and many others.

Detail grades will help the designer to:

1. Determine a smooth, rideable grade through the problem area.
2. Determine good drainage throughout the intersection.
3. Avoid excessive crown drops.
4. Avoid excessive cross slopes that could exceed recommended maximum break over slopes.

1.02.15 (continued)

Detail Grades

B. Guidelines

A plan sheet is prepared to cover the problem area at an exaggerated scale, usually 1"=20' (20 scale).

Profile lines are then determined; i.e., alignments of mainline and crossroads, edge or curb lines, and intermediate lines for wide pavements or intersections (usually lane lines or joint lines).

A grid for cross sections is established. Depending on the area, this may be in 10' intervals or up to 25' intervals.

Elevations are placed on the drawing, (or possibly using X and Y coordinates) starting with the known elevations, i.e., the established mainline grade, the existing crossroad elevations or proposed grade, or proposed ramp grades, etc.

Other elevations are filled in from normal crown drops, superelevations, shoulder slopes, cross slopes, etc.

To avoid clutter on complex detail grades it may be simpler to assign point numbers to each intersection point on the grid and assign letters to each line (profile or cross section).

Profiles are then plotted on the same horizontal scale and on an exaggerated vertical scale. This scale is job dependent and should be readable when placed on an 11" x 17" sheet. Cross sections should also be plotted.

Profiles and cross sections are then massaged until the intersection meets all criteria for grade, crown, cross slope, and acceptable rideability.

The finished detail grades will also help to determine drainage requirements. Low spots will determine drainage structure placement, runoff to culverts or ditches and so forth.

1.02.16

Maintaining Traffic/Stage Construction

Many projects will require construction staging so that the highway, or at least part of the highway may still be used by the motorist. All projects should be reviewed early in the design stage with the Region/TSC to determine if staging plans are needed. When staging is required, the designer should include staging sheets and/or special provisions in the final plans that indicate, pictorially and in text, what stages and construction sequences are required.

Generally, each stage should have a typical cross section showing the following:

1. Temporary pavement or shoulders
2. Lanes to remain open
3. Removals
4. Location of barricades or barriers
5. Lane widths and other dimensions
6. Signal poles

The text should adequately describe each step of the stage so that there is no misunderstanding as to what, where, and how things should be done.

If staging is not complicated, it may be possible to spell out the staging requirements with a special provision. If so, plan sheets will not be necessary.

In addition to staging plans, maintaining traffic plans showing construction signing should be prepared if the signing is altered from the standard construction sign layouts shown in the Maintaining Traffic Typical Cross Sections. The Region/TSC Traffic and Safety Engineer will mark the sign types and location on a base plan prepared by the designer. The final construction signing plans are then completed by the designer.

(See Chapter 8 Maintaining Traffic of this manual for more information.)

1.02.17 (revised 11-28-2011)

Signing Plans

Occasionally, as part of the contract, construction projects will include permanent signing along a relocated highway or upgraded signing along an existing highway.

The Design Division - Traffic Sign Unit is responsible for preparing permanent signing plans. Working together, the designer and a representative from the Traffic Sign Unit, will determine sign types (ground mount, cantilever, truss, etc.), size, location, legend, and other details. These details will be shown on base plan sheets, usually prepared as strip plans on a small scale, i.e., such as a 200 scale. Standard signing plans from Traffic and Safety are then added to the plans. The signing standards show the details necessary to fabricate and construct the permanent signing.

1.02.18

Pavement Marking Plans

Pavement marking plans show the details of the permanent markings for lane lines, edge lines, and special markings such as: stop bars, directional arrows, and railroad crossings.

Base plans are prepared at a suitable scale that will show the necessary details. Repetitive markings, such as lane and edge lines need not be shown P.O.B. to P.O.E. but only for a portion of the project and where they may vary from the typical situation.

Intersections, parking areas and parking lots, railroad crossings, school areas, hospitals, pedestrian crossings, and other special situations should have pavement marking plans showing the details.

Again, close coordination with Traffic and Safety is needed to prepare detailed and complete pavement marking plans. ***The Michigan Manual of Uniform Traffic Control Devices*** gives details for pavement markings.

1.02.19 (revised 11-28-2011)

Miscellaneous Plans

Occasionally, a project may require traffic signal plans, municipal utility plans, wetland mitigation plans or other miscellaneous plan sheets. Traffic signal plans are prepared by the Operations Field Services Division - Traffic Signal Unit. Municipal utility plans, such as water mains, street lighting, sanitary sewers, etc. would be prepared by or coordinated through the Utility Section of the Design Division. Wetland mitigation plans are coordinated with the Roadside Development Unit of the Design Division.

1.02.20 (revised 11-28-2011)

Log of Borings

Many construction projects require numerous soil borings, pavement coring, and other geotechnical information. Soil borings and cores are needed for a variety of reasons, including but not limited to:

1. Subgrade information
2. Pavement structure type and depth
3. Foundation (signs, trusses, retaining walls, bridges, etc.) information
4. Proposed sewer, culvert, and other underground utility information
5. Location of water table
6. Signal poles

When there are only a few borings required on a project, they can be shown on the plan or profile sheet where they are located. In most cases, however, separate log of boring sheets should be prepared. These sheets show the number and location of the boring and a sketch which includes the depth and a description of the material encountered. The Design Division's Guidelines for Plan Preparation have a sample soil boring sheet which is a good reference when preparing log of borings plan sheets.

1.02.20 (continued)

Log of Borings

Information that needs to be supplied along with the Borings are: date the boring was taken, who performed the boring, and the level of the water table (or "dry").

Construction Field Services Division and the Region/TSC Soils Engineer will analyze the boring information and make recommendations regarding pavement structure, subbase requirements, subgrade undercutting, foundation recommendations, sewer and culvert trench undercutting, bedding, dewatering needs, and other special treatments.

1.02.21 (revised 10-22-2012)

Special Details

Special Detail plan sheets are used to show project specific items and details not covered by the standard plans. They are located in a folder in ProjectWise for MDOT internal access. These details are typically draft versions of new or revised standard plans awaiting final approval. These special detail sheets should be included in the final set of construction plans.

Modified Special Detail sheets may also be prepared by the designer to show other necessary details not covered by a standard plan or special detail provided by the Standards Unit. These may include gore details, guardrail installations, surfacing details and transitions, modifications of standard items, drainage details and so forth. See Section 1.02.02B for more information.

1.03 (revised 10-22-2012)

MISCELLANEOUS

1.03.01

Order of Plan Sheets

Plans should be assembled in the following order:

- Title Sheet
- Project Information Sheet
- Vicinity Map
- Drainage Map
- Typical Cross Section Sheets
- Miscellaneous Detail Sheets
  (Unique Treatments for Specific Areas)
- Note Sheet
- Miscellaneous Estimates
- Standard Symbol Sheet
  (Legend Sheet)
- Witnesses and Benchmarks
- Survey Information Sheets
- Alignment/ROW Sheets
- *Plan and Profile Sheets
- Interchanges/Ramps-Plan and Profile Sheets
- Crossroads-Plan and Profile Sheets
- Detail Grades
- Maintaining Traffic/Construction Staging Sheet
- Signal Plans
- Permanent Signing Plans
- Pavement Marking Sheets
- Soil Boring and Pavement Core Sheet
- Utility Sheets (lighting, water, sewer, etc.)
- Wetland Mitigation Sheet
- Rest Area/Landscaping Plans
- Standard Special Detail Sheets
- Bridge Plans

* Removal, construction, and profile sheets should be arranged in this order according to station limits

Only the sheets included in a set of plans should appear in the index of the title sheet.

1.03.02 (revised 10-20-2008)

Lettering, Notes, Conventions

See the CAD Standards for examples of drafting conventions, symbols, line weights, etc. to use in preparing plans.

1.03.03 (revised 11-28-2011)

Critical Path Method (CPM)

Critical Path diagrams indicate construction events, the sequence of each event, the time required to complete each event, and which events become "critical" to the completion of the project. The designer may be asked to complete a critical path diagram for all but the most simplistic projects.

Critical path diagrams are not a part of the plans, but are valuable for setting construction completion dates, open to traffic dates and other intermediate dates. Contractors interested in bidding the project can receive the CPM prepared by the designer, but are encouraged to prepare their own critical path diagrams. CPM's should not be given to contractors without a disclaimer worded similar to the following:

B.P.I.A. Company
123 Money Street
Mission Model, MI 48917

Attached is a copy of the critical path and computer printout that you requested for the subject project. The critical path information was used as one of the aids in arriving at the final completion date and/or interim completion dates. It is not officially part of the plans and any errors or omissions will not relieve the contractor from meeting the dates set in the progress schedule in the proposal.

Critical paths are very important for high impact and expedited projects. The CPM will show which items or events need to be expedited to complete the project. Early and late start and finish dates, seasonal limitations, holiday and special event shutdowns, and ordering and delivery of materials all enter into the formulation of the path.

1.03.03 (continued)

When preparing the CPM, it is important to consider the length of the work week. With weather being a consideration, a four-day work week can be used on normal projects. On expedited projects, however, a five or even six-day work week may be appropriate.

Information on times for construction events, sequences, etc. is available from Construction Field Services Division. The designer should work closely with Construction Field Services Division and/or the project engineer when preparing the CPM.

1.03.04 (revised 10-22-2012)

Roadway Cross Sections

Roadway cross sections are very valuable to the designer. They are one of the main items used to design the project. Cross sections are used by the designer to visualize what the roadway will look like in the field.

Roadway cross sections show the existing roadway conditions. They are used to determine earthwork, draw slope stake lines, determine right of way needs, fit proposed to existing, determine driveway and crossroad grades, determine clearing and removal limits, determine drainage requirements, set front and back slopes, and determine much more information needed to design the project.

Cross sections should be plotted for all projects with grade and slope changes. Exaggerated cross sections can be very helpful in setting curb grades on urban projects.

The roadway cross sections are not included in the plans but should be sent to the project engineer before the project is under construction. The sections can be very informative to the construction personnel and, many times, help to explain the design shown on the plans.

1.04

LOG PROJECTS

1.04.01 (revised 10-22-2012)

Preparing a Log Project

Most designs for construction projects will be prepared using full size plan sheets. Occasionally a project may be very straightforward and uncomplicated. In such cases, the design can be completed with sketches and a written narrative. Such a design is called a "Log Project".

In a log project the title sheet, typical cross sections, and details are prepared on 8½" x 11" sheets. The work plan (log of project), including pay items, is written in narrative form describing what and where construction operations will occur.

Locations are referenced by station which is often obtained by a distance measuring device or from old plans, rather than an accurate survey. Existing right of way maps, reduced to 8½" x 11" are sometimes included in the log.

Log projects provide a simple design when specific detail or accuracy is not required. Because of the complexity and the need for detail in most major road design projects, the use of log plans are not very common. In general, projects with estimated construction cost exceeding $2.5 million should be prepared using full size plan sheets.

1.04.01 (continued)

Log projects include much of the same information that is in a normal plan project, including utilities, standard notes, applicable standard plans and special details, typical cross sections, maintaining traffic details, staging, pavement markings, signing, and so forth. All project detail sheets and the descriptive write-up are prepared on 8½" x 11" sheets and should be included with the supplemental specifications, special provisions, and other bid documents in the proposal format.

The sheets for log projects should be assembled in the same general order listed for plan sheet projects as they apply for the log project (see Section 1.03.01). If a sheet index is listed, it should be listed on a separate sheet following the title sheet. Since the 8½" x 11" sheet format affords less room for details on the title sheet, this will allow for a cleaner title sheet. Generally the log of project write up precedes the typical cross sections. However the reverse may apply as necessary to provide a logical sequencing of information.

Log projects are required to include Pay Items for Monument Preservation, Monument Preservation Vertical, Monument Box, Protect Corners, and Monument Box Adjust.

1.04.02 (added 10-20-2008)

Earth Disturbances

Information related to soil erosion and sedimentation controls for an earth disturbance, which is normally included in a full size set of plans, is sometimes also required in a log project. An earth disturbance is a human-made change in the natural cover or topography of land, including cut and fill activities, which may result in or contribute to soil erosion and subsequent sedimentation of the waters of the state. Earth disturbances in log projects, which contain work items such as culvert extensions or shoulder widening within the Right-of-Way or within the limits of a grading permit, will require inclusion of SESC measures.

If an earth disturbance occurs within 500 feet of a lake or stream, or is one acre or greater in area, the following twelve elements are required to be included in the log documents. These elements constitute an earth change plan as outlined in R 323.1703 of the State Administrative Rules (Part 17).

1. A scaled drawing of the work site
2. Township, Range & Section
3. A site location sketch
4. Proximity to lakes and streams (Distance and direction to)
5. Predominant land features (USGS description)
6. A slope description (Typicals or copy of contour maps)
7. General soil types (Borings not required, just description of general soil types.)
8. Limits of earth change (Using slope stake lines and ROW lines)
9. Drainage features or dewatering operations (Culverts, sewers or water diversions)
10. Timing and sequence of earth change (Reference to Construction Progress Schedule)
11. Description and location of SESC measures (Show key numbers in the log)
12. Maintenance plan for SESC measures (See SESC Manual for maintenance of key items.)

1.04.02 (continued)

Preferably, SESC measures should be included in the proposal using key numbers from the SESC Manual. Otherwise, plan notes can be used. If a ditching operation utilizes a project log, language in the proposal should refer to the Maintenance Division's guidance document for this item of work (#12300), a copy of which is also included in the latest SESC manual.

Refer to Section 2.05 for detailed information on including SESC measures on plans. Contact your environmental coordinator or region resource specialist if you have any additional questions regarding earth disturbances and earth change plans.

5.20 (revised 10-22-2012)

REQUIREMENTS FOR FINAL R.O.W. PLANS

In addition to the requirements for preliminary R.O.W. plans, the following information is needed for final R.O.W. plans:

1. R.O.W. sheet numbers shall start with 501 (Title Sheet) and will be in the same order as the construction plans. The R.O.W. sheet numbers shall be consecutive and should not change through the life of the project. The note sheet, maintaining traffic, staging, signing, traffic signals, soil borings and other miscellaneous sheets are not part of the R.O.W. plans unless any of these items affect Proposed R.O.W. items. Title sheet, Profile sheets (if part of the plans), Bench Marks, Control Points and Government Corner witness sheets shall be included in the plans. If removal items are shown on a separate sheet from the proposed work, both the removal and construction sheets shall be included. When alignment sheets and drainage sheets are part of the construction plans, they shall be included in the final R.O.W. plans.

2. Existing R.O.W. widths shall be marked from legal alignment (see Section 14.12.01 for definition) to the R.O.W. line at all changes in width and at both ends of all plan sheets. Consents to Grade may be dimensioned from the existing or proposed R.O.W. lines. Existing R.O.W. shall be dimensioned as detailed in Section 1.02.08.
   - Proposed R.O.W. within subdivisions should be dimensioned from lot corners.

5.20 (continued)

   - Proposed R.O.W. lines that are not parallel to the legal alignment shall have the bearings and distances indicated or have other ties adequate for writing property descriptions. Proposed R.O.W. ties and dimensions shall be accurate to two decimal places for distances and to the nearest second on bearings. Consents to Grade are normally stationed to the nearest increment of 5 feet and widths in increments of 5 feet. Consents to Grade should be varied to avoid obstacles and the obstacles should be labeled as AVOID.
   - In order to minimize having several legal alignments on subsequent projects, it is desirable to use retraced legal alignments to acquire R.O.W. as much as possible.

3. All Government Corner Ties shall be shown, including distances from corners to the legal alignments, station calls, and government line bearings. Government corner witnesses shall be provided on the Survey Information Sheet. Recorded Plats shall be shown accurately.

4. Curve data shall be shown consistent with the requirements of Section 1.02.08.

5. All known locations of underground utilities (electricity, gas, cable, oil, telephone, water, sewer) affected by construction within the R.O.W. shall be shown.

6. All existing and proposed drainage, including field tile drain systems should be shown when known. All County Drain names, Existing R.O.W. widths and flow arrows shall be shown on the plans.
   - Once existing field tile systems have been located, show them on the plans by a R.O.W. Revision.

5.20 (continued)

REQUIREMENTS FOR FINAL R.O.W. PLANS

7. All Slope Stake Lines shall be shown. The Slope Stake Lines shall always be shown within the Existing R.O.W., Proposed R.O.W. or within the areas of a Consent to Grade.

8. Show Proposed and Existing Limited Access arrows where Limited Access R.O.W. begins and ends.

9. Existing driveways shall be shown where Consents are required and on other properties affected by construction. Proposed driveway grade information shall be shown where applicable. Existing structures and addresses shall be shown on affected properties. Consents are only required when grading of the driveway is outside the existing R.O.W., or minor grading is required to replace sidewalk within the existing R.O.W.

10. To help the MDOT buyer explain to the property owner what the property will look like after construction, the proposed work as well as existing topography shall be shown. Pay items and quantities shall be omitted.

If the construction staging of a project requires temporary widening with a Consent to Grade or there is a need to temporarily close driveways, the staging plans should be added to the plans to help the buyer to communicate what will temporarily happen to the property.

Final R.O.W. submittals should be sent in as soon as possible to give Region Real Estate as much time as possible to acquire the R.O.W. R.O.W. revisions can be used to modify the Final R.O.W. submittal as requested by the Designer or Region Real Estate. Designers should make R.O.W. plans a priority in the Design Process.

5.21 (revised 2-27-2012)

R.O.W. REVISIONS

Right of Way Revisions are processed by the Project Manager. The Project Manager must complete the "R.O.W." box on each revised plan sheet summarizing the revisions. Should there be more than one revision on a given plan sheet each subsequent revision shall be added to the individual sheet that is revised (see figure 5.21A) The Project Manager completes and signs the Request to Revise R.O.W. memorandum, (form 0271A) attaching the revised plan sheet(s) with the revisions circled in red. The Revised R.O.W. memorandum should include a detailed description of and reason for the revisions. The requesting unit or division should also be included on the memorandum.

Revisions, unless originated within the Development Services Division, are not normally accepted within six months of the letting date. If a revision is necessary within six months of letting, consult with the Project Development and Resource Management Section of the Development Services Division, or the Design R.O.W. Engineer to determine the best method for processing the Revision.

If a R.O.W. Revision includes a majority (more than 50%) of the plan sheets included in the Final R.O.W. plan submittal, it is advisable to re-submit the entire set of Final R.O.W. plans instead of issuing a R.O.W. Revision. The Design R.O.W. Engineer should be consulted in making this determination.

			FINAL R.O.W. ISSUED 01/15/2010
AUTH	DATE	NO.	REVISION
ABB	3/15/11	1	Deleted Prop ROW Sta 1+00 to Sta 2+00
ABC	7/25/12	2	Added Drainage Easement sta 50+00

Figure 5.21A

6.03.03

Philosophy of the Use of HMA Surfacing

Both the HMA and portland cement concrete industries are vital parts of Michigan's economy. The Department therefore endeavors to make impartial use of both materials. Because of its adaptability to the maintenance of traffic, needing only to cool before traffic can be allowed on it, asphalt is the common type of resurfacing in use. It is also used rather extensively as the pavement type on new construction in the areas of the state having granular soils.

The purpose of resurfacing is to extend the useful life of a pavement for a given length of time, usually for a period of 8 to 12 years, but sometimes for as little as 3 to 5 years. If no design life is specified when a resurfacing project is assigned, assume it to be 10 years. In some situations a shorter design life may be desired.

6.03.04 (revised 10-22-2012)

Surface Preparation

A. Conditioning Aggregate Base / Surface

When existing aggregate base/surface remains in place see Section 6.02.09D.

6.03.04 (continued)

B. Concrete or Composite (HMA on Concrete) Pavement

1. Crown and Superelevation Modification

Current methods for modifying pavement crown and superelevation are expensive and need careful consideration. Many resurfacing projects call for modifying the crown from the former parabolic configuration to the current 2% cross-slope and/or upgrading pavement superelevation. Modification of pavement slope is typically accomplished by wedging with HMA and/or cold-milling. The need for modification will be based on a safety analysis and applicable design standards. Crown modification may include changing the shape, changing the rate of the cross slope, adjusting the crown point location or a combination of the three. Existing pavement slope(s) should be thoroughly reviewed during the project design (including cross-sectioning where applicable) to minimize construction problems and cost overruns.

2. Cleaning Pavement

The ***Standard Specifications for Construction*** state that the pavement surface must be clean prior to resurfacing. Some designers have purposely omitted the item when milling is done on the assumption that sweeping after the milling accomplishes the desired result. The fallacy with this is that several weeks can elapse between milling and resurfacing, giving the pavement time for dirt to be tracked upon it once more. The pay item "Pavt, Cleaning", measured as a lump sum, should therefore be included in all resurfacing projects. It can be deleted during construction if for some reason it is not needed.

6.03.04B10 (continued)

Surface Preparation

There are two pay items involved with Detail 7 and 8 joint repairs, "Pavt Joint and Crack Repr, Det __" and "Hand Patching". See preceding Section 6.03.04B(9).

If the project includes milling off the old HMA surface, it may be recommend at THE Plan Review that the milling machine drum be lowered perhaps 1" into the deteriorated joint to remove the deteriorated concrete and debris. If this is done, the contractor is merely compensated for the additional milled material that is removed, and the additional new surfacing material required to fill the deeper void at the joint. If, after the milling has been done, it appears that the joint is in such condition as to require a bonafide Detail 7 or 8 joint repair, then the engineer will order that this be done. The subsequent repair would then be paid for as an ordinary Detail 7 or Detail 8 joint repair.

11. Pavement Patching

Pavement patching consists of a cast in place concrete patch, in most situations. A concrete patch is used when a Detail 7 or Detail 8 repair method is not sufficient. Standard Plan R-44-Series illustrates a concrete patch design. Full depth HMA patches are used in lieu of concrete patches only when maintaining traffic concerns warrant the change. Full depth HMA patches are typically recommended on low commercial volume routes. Full depth HMA patches should only be used on freeways when maintaining traffic is an overriding concern.

6.03.04B11 (continued)

Backfill material for a full depth HMA patch is mainline top course mixture and is paid for as Hand Patching. See Section 6.03.09.

The patching mixture will be placed flush with the surface of the existing pavement. The patch is paid for as “Pavt Repr, Rem” in square yards of material removed, and as “Hand Patching” in tons to the cover the HMA mixture put back.

12. Guidelines for Preparing a Deteriorated Jointed Reinforced Concrete Pavement for an HMA Overlay

The Engineering Operations Committee has approved the following guidelines for repairs to jointed reinforced concrete pavement in preparation for an HMA overlay.

1. Traffic Volume Range 0-5,000 ADT (per roadway)

   Replace all joints and cracks having a distress severity level of 1 with a Detail 8 repair. Remove all cold patch material and loose concrete from all remaining joints and cracks and replace with a Detail 7 patch. All previously placed concrete repairs are to be left as is, except cold milling of concrete repairs faulted more than ¾” is optional (in lieu of replacement).

CHAPTER 14 PROCEDURES FOR PLAN PREPARATION INDEX (continued)

14.12 REQUEST FOR SURVEY / MAPPING

14.12.01 Road

14.12.02 Bridge

14.13 PROJECT AREA CONTAMINATION SURVEY

14.14 REVIEW / REVISE PPMS NETWORK

14.15 CHANGE REQUEST (REVIEW OF PROJECT SCOPE, COST AND SCHEDULE)

14.16 REQUEST FOR UTILITY INFORMATION AND UTILITY COORDINATION

14.17 SUBSURFACE UTILITY ENGINEERING (SUE)

14.18 PAVEMENT DESIGN

14.19 REQUEST FOR PAVEMENT CORES / SOIL BORINGS

14.20 RECEIPT OF SURVEY / MAPPING DATA

14.21 BRIDGE REVIEW

14.21.01 Review by Bridge Design

14.21.02 Historic Bridges

14.21.03 Bridge Loading and Underclearance Review

14.21.04 Special Structures / Footing Design

14.22 RAILROAD COORDINATION

14.23 REQUEST FOR TRAFFIC VOLUMES

14.24 REQUEST FOR CRASH ANALYSIS AND SAFETY REVIEW

14.25 REQUEST FOR SPECIAL SOILS INVESTIGATIONS AND / OR DESIGNS

14.26 DISTRIBUTION OF PLANS TO UTILITY COMPANIES

14.27 VALUE ENGINEERING

14.28 REQUEST FOR PRELIMINARY MAINTAINING TRAFFIC

14.10 (revised 10-22-2012)

SCOPE VERIFICATION MEETING
(PPMS Task Description 3130)
(PPMS Milestone 312M)

Once a project is assigned, the Project Manager should request from the office that scoped the project, a copy of the scoping documents. These documents may include such items as a completed copy of the appropriate scoping forms and checklists, the project concept statement, pavement coring information, a cost estimate a sketch of the proposed typical cross section(s) and a preliminary survey. The initial PPMS Network should also be available. The Project Manager will then gather the necessary old plans, utility information, traffic data and other useful background information and develop a preliminary cost estimate and compare it to the programmed cost. When sufficient information is available, the Project Manager will request the Region/System Manager to schedule the Scope Verification Meeting.

If this preliminary estimate differs significantly from the programmed cost, the Project Manager should discuss increasing the programmed cost, changing the scope of work and/or reducing the project limits at the Scope Verification Meeting. Consensus should be reached at, or as soon as possible after, this meeting to minimize lost design time and to avoid a possible delay of the project

Prior to or at the Scope Verification Meeting the Project Manager should verify that the "Pavement Design and Selection Policy" has been followed as described in Section 6.01.06. Depending on the type of fix and estimated paving cost, a Life Cycle Cost Analysis (LCCA) may also be required. If the procedure has not been followed, the Project Manager should contact the Pavement Design Engineer or Region/TSC Soils Engineer to initiate adherence to the policy.

14.10 (continued)

In order to insure that everyone understands and agrees with the proposed scope of work, it is essential that all the disciplines and work centers that will be involved in the development of the project be invited to this meeting. This will minimize possible "scope creep" and reduce the number of redesigns by verifying and documenting the scope of work as early as possible in the design process. Recommended attendees include:

- Project Manager
- Unit Leader(s)
- Environmental - Project Planning Division (BTP)
- Geometrics Unit
- Construction Field Services Division
- FHWA (FHWA Oversight)
- System Manager
- Region/TSC
  - Design/Development / Engineer
  - Traffic and Safety
  - Soils/Materials
  - Utilities/Permits
  - Resident/Delivery Engineer
  - Maintenance
  - Development Services Division (if applicable)
  - Survey (if Right of Way is to be acquired or as otherwise applicable)

The Project Manager will write and distribute the meeting minutes. Copies should be sent to the Region/TSC System Manager, the Environmental Section in the Bureau of Transportation Planning and all attendees to the meeting.

If this meeting results in a revised scope of work and/or an increase in the project cost, it is the responsibility of the office that originally scoped the project to revise the project scope and/or schedule and request reprogramming of the project.

14.12 (revised 10-22-2012)

REQUEST FOR SURVEY / MAPPING

(PPMS Task Descriptions 3310, 3320, 3330, 3340, 3350 & 4510)

Once the scope is verified, the need for a ground survey and/or aerial photography and/or laser scanning for mapping should be determined. Requests for this work can be made by the Region System Manager, Project Manager, or the Design Unit Leader. Ideally, the need for, and the requirements of, survey and mapping on a project should be discussed and agreed upon at the Scope Verification Meeting.

If Right of Way may be acquired for the project, an early control survey should be ordered immediately to enable Real Estate personnel to begin landowner contact and reduce the timeline through the critical path. This early control survey would consist of horizontal survey control being set throughout the project area, government corners being tied in to the coordinate system, and enough property corners being tied to develop approximate non-legal ROW and property lines throughout the project area.

The Survey/Mapping Action Request (Form 0226) should be used to initiate the work. If survey and/or mapping work was ordered and completed during the Call-for-Projects process and additional information is required, a pick-up survey can be ordered using the above forms.

All survey requests should be directed to the Supervising Land Surveyor or Region Surveyor. The Region will decide whether to do the project themselves or request assistance from Lansing survey staff, either in the field or in the hiring consultant surveyors. This should be done as soon as possible to allow for the survey and mapping to be completed in a timely manner that does not impact the project's critical path.

14.12 (continued)

When ordering survey or mapping work for complex projects, the requestor should consider all the disciplines involved and consolidate all of the survey needs prior to submitting a request. These disciplines may include such areas as bridges, hydraulics, utilities, electrical, railroads, signals, ADA, etc. This can save considerable time and effort by eliminating additional pick-up surveys and the resulting complications created when tying in multiple survey alignments and data.

Coordination of field survey data is necessary to support design. In order to ensure the necessary detail and accuracy for a set of plans, the Project Manager should discuss all requirements with the Supervising Land Surveyor or designated Survey Project Manager of Photogrammetry and Surveys. This will allow the most efficient methods to be used to obtain the field data.

Listed below are definitions for the different types of survey information that may be requested on the Survey/Mapping Action Request (Form 0226).

14.12.01 (revised 10-22-2012)

Road

Alignment

Typically, there are three different types of data described as 'Horizontal Alignments' that are used for MDOT design, any of which may or may not be considered a legal alignment. These three types of alignments are: Survey, As Constructed, and Construction.

Survey Alignment: Historically, a survey alignment was primarily used as a baseline for locating topographic features, cross-sections, etc., along a proposed route. This was an alignment provided to or created by survey crews to lay out a preliminary location and collect data relative to that route.

As-Constructed Alignment: This is frequently referred to as a "best fit" alignment, which represents the physical road location at a specific point in time. These alignments are typically computed using survey points collected along the actual roadway centerline (crack, crown, paint stripe, curb split, etc.).

Construction Alignment: An alignment developed for the purpose of constructing a roadway. The construction alignment is proposed by an engineer. Additional R.O.W. needed for a project was frequently described from this alignment.

14.12.01 (continued)

Legal vs. Non-legal

A **legal alignment** defines actual location of the Right-of-Way based on a survey alignment, as constructed alignment, and/or a construction alignment as referenced in property descriptions, conveyances, i.e. legal documents. It is considered a property controlling entity similar in standing to government section lines. A legal alignment is often used as a basic part of these descriptions. A survey to re-establish the location of the legal alignment is necessary when the purchase of additional R.O.W. is required, or the designer wishes to know where the existing R.O.W. is located to avoid acquiring additional R.O.W. There may be several "legal" alignments on any particular project from which different parcels have been purchased over time. Considerable research and survey work may be required. The legal alignment and the physical centerline may not coincide. Generally, if property is purchased, the Department's past policy has been to describe the conveyance from the construction alignment, potentially creating yet another "legal" alignment. In order to minimize the creation of multiple legal alignments and thereby the confusion and added cost of future surveys, future **R.O.W. acquisitions should be based on *previously established* legal alignments whenever possible.**

A **non-legal alignment** is used primarily to locate features for the purpose of design. It can be considered a line that provides direction and stationing for locating features, determining quantities, and staking out the project. A non-legal alignment is not intended to relate to the location of the Right-of-Way and is not used for property acquisition.

MDOT Alignment Standard

Alignments will be designated only as ***legal*** *or* ***non-legal*** by the surveyor/engineer. Differentiation and perpetuation of existing alignments will be done through annotation. Design alignment deliverables will be designated on CAD levels as Ali_Legal_Line_GS or Ali_NonLegal_Line in MicroStation for the plan alignment sheets.

14.12.01 (continued)

Road

Bench Marks: Points of known elevation. Bench marks are usually set along a project at a given interval to provide the construction crews elevations from which to work. May be an assumed (elev. = 300.000 ft), National Geodetic Vertical Datum (NGVD 1929) or North American Vertical Datum of 1988 (NAVD 1988, which is most current and recommended).

Drainage: Data specific to surface and underground storm drainage and related features. This usually includes a separate report describing any existing or potential problems, location and direction of flow of surface drainage, and underground storm systems.

Government Corners: Monuments representing the locations of the corners as originally set as part of the United States Public Land Survey System (USPLSS). These corners control the location of nearly all property boundaries. Preservation and perpetuation of these monuments is required by state law.

Hydraulic Survey: A cross section survey used to analyze the flood flow and capacity of a given stream which helps to determine the design parameters of a stream crossing structure. (The Engineer of Hydraulics should always be consulted whenever this type of survey data is required.

14.12.01 (continued)

Photo Control: X, Y and Z coordinate data on target points specified by Photogrammetry for the purpose of controlling aerial mapping. This process is very similar to that used to control laser scan mapping.

Planimetric Mapping: The act of locating all topographic features (by coordinates) for the purpose of creating a map. This is analogous to station plus and offset information. Typically, when speaking of planimetrics, this does not include terrain data (elevation/cross section). In practice, this information is collected together with the terrain data to produce a three dimensional model of the surface.

Plat Maps: Legal maps that indicate the description, easements, layout and dimensions of a platted subdivision and its included lots. These documents are recorded and on file with the County Register of Deeds.

Property Owners: Owners of property adjacent to a roadway or bridge.

Property Ties: Survey measurements that relate the location of existing property corners and or government corners to the alignment and horizontal coordinate system.

Riparian Owners: Property owners adjacent to a lake, stream or river that may have some rights to the bottom lands of such a body of water or stream. Riparian ownership and contact information is usually required for the four quadrants around a bridge over water.

14.12.01 (continued)

Road

Terrain Mapping: The act of mapping the surface of the earth to determine the location and elevation of the ground features. This results in the creation of a Digital Terrain Model (DTM) and.or Triangulated Irregular Network (TIN) from which cross sections may be calculated. Usually collected at the same time as the planimetric data.

Utilities: Public and privately owned structures in place to carry electric, telephone, water, sanitary sewers, etc. Utility information would typically include ownership, location, rim and flow line elevations and pipe directions.

Other: Any other miscellaneous information.

14.12.02 (revised 10-22-2012)

Bridge

Alignment: Same as Road but should include exact stationing of the reference points (intersection of abutment and pier reference lines with the as-constructed alignment.

Angle of Crossing of Substructure: The angle at which the reference lines of the structure cross the as-constructed roadway alignment.

Bench Marks: Same as Road. Bench Marks should be left in the vicinity of the bridge structure on both sides of the crossing.

Bridge Seat Elevation: Elevations of the top of the abutment/pier that supports bearing pads/bridge beams.

Bridge Survey: A survey of a bridge structure. This survey often requires sketches in plan and elevation view, and diagrams to illustrate all critical dimensions, in addition to Microstation planimentric and terrain mapping.

Dimension of Existing Sub-structure Elements: Physical measurements of the abutments, piers, wingwalls, etc. such as width, length, face to face and height above natural ground, amount of cover and so on. Specific needs should be noted by the requestor.

Dimensions of Existing Superstructure Elements: Physical measurements of deck width, and length thickness, sidewalk and curb dimensions (face-face, width, height, etc.), bridge railing type and dimensions.

Property Ties: Same as road.

Riparian Owners: Same as road.

Top of Footing Elevation: Elevations of existing bridge footings. Usually requires probing and/or digging for location. Often difficult or impossible to find.

14.12.02 (continued)

Bridge

Topography: Typically describes planimetric and terrain features together. The planimetric detail should include the bridge deck as a feature. The terrain data should model the surface as though the deck did not exist. This should result in contours that accurately represent the surface of the ground.

Under clearance Elevation: Elevations of the bottom of the existing bridge beams. Normally taken over pavement edges and lane lines for grade separations. For design purposes, minimum vertical clearance must be maintained over the complete usable shoulder. See Section 3.12. For stream crossings the elevations would typically be taken over the intersection of the ground with the sub-structure units and over the highest low beam. The underclearance is then the difference between the elevation of the beams and the elevation of the appropriate feature below them. Any special locations should be noted in the request.

Utilities: See Road. Any utilities attached to the structure itself should be noted.

Water Surface Elevation: Elevation of the exact surface of the water on a given date, taken at intervals up and down stream to determine stream gradient. The date each measurement is made must be recorded.

Other Elevations: Any other elevations required that are not covered above.

14.13 (revised 3-26-2012)

PROJECT AREA CONTAMINATION SURVEY

(PPMS Task Descriptions 2810 & 2820)

The following interim procedures have been developed for identifying potential contaminated sites, conducting the necessary testing and estimating the cost of remediation.

1. The Project Manager sends a project description and location and requests a list of potential contaminated sites to both the Environmental Assessment Unit (EAU) in the Development Services Division and the Region/TSC Resource Specialist (RRS).

2. The EAU and PCU coordinate with the Region/TSC Resource Specialist to conduct a Project Area Contamination Survey (PCS) by searching state or local records, interviewing state and local officials and citizens.

   The Region/TSC Resource Specialist performs a visual inspection of the project area. The EAU and RRS notify the Project Manager.

3. If no known or potential sites are found, The Project Area Contamination Survey process terminates at this point. (The Project Manager would delete PPMS Task Description 2820 from the project PPMS network.)

4. If potential contamination sites do exist, the Project Manager adds the locations of the sites to the base plans and reviews the sites for conflicts with the proposed work. If the Project Manager determines the potential sites do not conflict with the proposed work, the Project Area Contamination Survey process terminates at this point. (The Project Manager would delete PPMS Task Description 2820 from the project PPMS network.)

14.17 (revised 10-22-2012)

SUBSURFACE UTILITY ENGINEERING (SUE)

(PPMS Task Description 3610)
(PPMS Milestone 311M)

On projects likely to involve numerous utility conflicts the Project Manager may elect to use a Subsurface Utility Engineering (SUE) consultant contract to identify utility locations. The Project Manager should contact the Utilities-Permits Section – Development Services Division for assistance in determining if SUE would be beneficial. Surveying for SUE projects by SUE consultants should utilize horizontal and vertical control established by MDOT survey staff, or MDOT pre-qualified consultant survey staff.

14.18 (revised 3-26-2012)

PAVEMENT DESIGN

After the scope verification meeting, the Project Manager should determine the estimated pavement costs of the project. Depending on the type of work and estimated cost, a Life Cycle Cost Analysis (LCCA) may be required. This along with the actual pavement design will be done by either the Region/TSC Pavement Design Engineer or the Operations Unit of the Construction Field Services Division – Pavement Operations. Those done by the Operations Unit must be submitted for approval to the Engineering Operations Committee (EOC). See Section 6.01.06.

14.19

REQUEST FOR PAVEMENT CORES / SOIL BORINGS

(PPMS Task Description #'s 3110 & 3510)

Most projects will require pavement core information, especially those involving pavement removal, rubblizing, crushing and shaping and/or cold milling. This information is useful not only in verifying the type of fix but also in assisting the Contractor in developing their bid prices. Pavement cores should be requested as soon as possible after the Scope Verification Meeting. The Project Manager should check with the Region/TSC involved to find out if cores were taken during the Call-for-Projects process.

When requesting pavement cores the Project Manager should include the following:

- Set of plans
- Description of what information is needed
- Desired location
- A target date when the information is needed

14.20 (revised 10-22-2012)

RECEIPT OF SURVEY / MAPPING DATA

(PPMS Task Description #'s 3310, 3320, 3330, 3340, 3350 & 4510)

When the survey or mapping work is submitted, the Supervising Land Surveyor or Region Surveyor forwards the data, notes, maps, etc. to the requestor in electronic format unless requested otherwise. This could be the initial survey ordered during the Call-for-Projects process or a pick-up survey with specific information not identified in the initial survey.

Photogrammetric and laser scan will be sent directly to ProjectWise. A transmittal memo with the map file names to be used on the project is sent to the requestor as notification the mapping has been completed.

14.21

BRIDGE REVIEW

Although the procedures discussed under Bridge Review should, ideally, occur during the scoping and Call-for-Projects process, the coordination described below should still be done during the initial stages of the design phase until the development of the Bridge Program is totally integrated into the Call-for-Projects process. This may sometimes eliminate any oversights during the programming of projects or due to scheduling changes of ongoing projects.

14.21.01 (revised 3-26-2012)

Review by Bridge Design

Whenever there are structures within the limits of a project, regardless of the scope of work, Bridge Design should be notified. The notification should be in the form of a memo to the Bridge Management Engineer initiating a review of those structures to determine if any design work is presently ongoing, being planned, or might be considered at each structure. The Bridge Management Engineer will contact Operations Field Services Division to determine if periodic inspections have revealed the need for structure repair or upgrading. This insures any future construction is coordinated and possibly consolidated thereby reducing PE and CE costs as well as minimizing the number of disruptions to traffic.

The following information should be relayed to the Bridge Management Unit:

- Control Section
- Job Number
- Route Number
- Location-Project Limits
- Proposed Scope of Work
- All Structures within the project limits
    a. names of crossroad/stream crossed by structure
    b. structure/bridge number
- Project Manager
- Proposed Plan Completion Date
- Proposed Letting Date

After the review is completed, the Bridge Management Engineer will inform the Project Manager in writing of any recommended work on each structure.

14.36 (revised 5-29-2009)

THE PLAN REVIEW
(PPMS Task Description #3590)
(PPMS Milestone 352M)

Most projects being designed by the Region/TSC or its Consultants require a Plan Review meeting. Refer to the table, QA/QC Process by Template on the Plan Development Services intranet website to verify the need for a Plan Review Meeting. The meeting and corresponding field review should be conducted by Quality Assurance. Under unusual circumstances such as expedited project schedules or when a Quality Assurance Engineer is unavailable, a Region/TSC Design Engineer or Region System Manager may arrange to facilitate THE Plan Review meeting. Refer to the QA/QC Process Guide for Project Managers on the Plan Development Services intranet website for exceptions to the plan review process (Form 0334).

14.36.01 (revised 10-22-2012)

Requirements

THE Plan Review material will be submitted in the following 3 files:

1. Supporting Documents File
   - A. Completed Plan Review Material Submittal Order
   - B. List of Outstanding Questions and/or Considerations
   - C. Scope Verification Report
   - D. Trns•Port Cost Summary @ Project Level (or equivalent) showing job number and category splits
   - E. Design Exceptions (FC26 - include file only and approval copies)
   - F. Crash Analysis and Safety Review
   - G. Pavement Design letter or approved LCCA
   - H. Guardrail Worksheets
   - I. Value Engineering Results
   - J. Capacity Analysis
   - K. Miscellaneous Information

14.36.01 (continued)

2. Proposal File
   - A. MOT Special Provision
   - B. Unique Special Provisions (place in Trns•Port numerical order)
   - C. 03 SP Checklist
   - D. 03 NB Checklist
   - E. Coordination Clause
   - F. Railroad Coordination Clause
   - G. Railroad Special Provisions
   - H. 03 SS Checklist
   - I. Water Main Special Provisions
   - J. Sanitary Sewer Special Provisions
   - K. Electrical SP's
   - L. Signal Special Provisions (03T819 & 820 series including checklist)
   - M. Pump House Special Provisions
   - N. Rest Area Special Provisions
   - O. Building Special Provisions
   - P. Log of Plans

3. Plan File
   - A. Title Sheet
     - a. Location map
     - b. POB & POE (Station & mile point.)
     - c. Traffic data and design speed (including locations of speed changes)
     - d. Control section, job number, physical reference number (PR#)
     - e. North arrow
     - f. County, city/village, section, township and range
     - g. Design Engineer/Consultant
     - h. Station equations and structure numbers
     - i. Legend
     - j. Detour route
     - k. Plan sheet index (Part 1 - Road, Part 2 - Bridge)
     - l. Project length
     - m. Description of work
     - n. Construction influence area
     - o. List of possible Special Use Permits (for discussion only)
     - p. Design ESAL's (Flexible and/or Rigid as required)

14.36.01 (continued)

Requirements

B. Vicinity Map (Projects involving relocation or that alter an existing alignment with significant ROW acquisition)
   a. Parcel lines with parcel numbers (if available), plats, section corners and section lines, Township & Range
   b. Stationing with proposed ROW widths.

C. Drainage Map
   a. County drains
   b. Cross culvert locations
   c. Directions of flow
   d. Culvert/sewer sizes
   e. Drainage data tabulation for culverts
   f. Profile of trunk sewer & drainage outlets

D. Typical Cross Sections
   a. Existing
   - Alignment required to construct the project
   - Station limits
   - lane and shoulder widths
   - depth and width of asphalt/concrete, base and subbase
   - crown location and pavement slope
   - removal items
     - pavement
     - curb and gutter (type)
     - earth excavation
   - side slopes
   - guardrail locations (type and length)
   - superelevation and point of rotation
   - cold-milling depth and control point
   - trenching limits
   - crush and shape limits
   - existing sidewalk location
   - existing underdrain location

14.36.01 (continued)

b. Proposed
   - ROW
   - Alignment required to construct project
   - survey and construction centerline (including ties to survey centerline)
   - crown location and pavement slope
   - lane and shoulder widths
   - typicals to reflect each situation (normal crown, superelevation,
   - guardrail section, ditch section, fill section and widening section)
   - identify earth excavation and embankment
   - station grading limits (if applicable)
   - width and depth of HMA/concrete, base and subbase
   - plan grade location with point of rotation
   - type of curb and gutter
   - HMA application table
   - superelevation with transition stationing
   - slope restoration or seeding/sodding items
   - side slopes and ditches
   - guardrail
   - concrete joint legend
   - underdrains
   - sidewalk width, slope & location

14.36.01 (continued)

Requirements

E. Miscellaneous Detail Sheet
   a. Cross roads
   b. Turn lanes, passing flares and intermittent widening
   c. Guardrail layout (with worksheets)
   d. Median cross-overs (typical section and plan layout)
   e. Temporary cross-overs or runarounds
   f. Parking areas
   g. Ramp terminal details
   h. Intersection layout
   i. Curbed islands, special drainage structures, etc
   j. Driveway details
   k. Butt joint/pavement transition detail

F. Note Sheet
   a. Standard notes
   b. Utilities & Public Agencies
      - company name/public agency
      - address
      - phone number
      - contact person
      - type of utility
   c. Standard plans/Special details
   d. Miscellaneous quantities
      - soil erosion and sedimentation control pay items

G. Standard Symbol Sheet (legend sheet) - update Special Legend this Project

H. Survey Information Sheets: Beginning with Datum Notes, this sheet lists benchmarks and horizontal control points, with witnesses and coordinates. Horizontal alignment points (P.C., P.I, P.T. and P.O.T.) found or set and government corners are also included.

I. Alignment / ROW sheets - see Section 1.02.08

14.36.01 (continued)

J. Removal and Construction Sheets
   a. Existing and proposed ROW, consents to grade, plats, lot numbers and house numbers
      - limited access
      - clear vision corners
      - permits to grade, to relocate drives, consent to close drives
   b. Existing topography
   c. Alignment required to construct project annotated consistent with requirements of Sections 1.02.08 – 1.02.10
   d. Superelevation (existing and proposed)
   e. Limits of removal items
      - slopestake lines
      - pavement and shoulders
      - crush and shape
      - rubblizing
      - cold milling
      - sidewalk
      - curb & gutter
   f. Limits of construction items
      - HMA approach
      - miscellaneous concrete
      - proposed e.o.m.
      - curb & gutter
      - guardrail
   g. Utilities
      - Water
      - telephone - Label as “Caution: Critical Underground Utility”
      - electrical - Label as “Caution: Hazardous or Flammable Material”
      - gas - Label as “Caution: Hazardous or Flammable Material”
      - cable - Label as “Caution: Critical Underground Utility”
   h. Existing and proposed culverts, storm sewer and end treatments

14.36.01 (continued)

Requirements

i. Lane additions/drops/transitions/right turn/passing flare (dimension curb taper, lane tapers and driveway/approach roadway radii)
j. Roadside obstacles
   - trees
   - headwalls
   - retaining walls
   - Signs, light poles, etc.
   - fences
k. Soil erosion and sedimentation control pay items/key legend
l. Show Outfall Label on appropriate outlet end sections and headwalls into wet areas

K. Profile Sheets
   a. Existing and proposed elevations
      - ditch grades
      - PVI stationing, PVC & PVT locations
      - curve lengths (K-Value, SSD)
      - tangent grades
   b. Existing and proposed storm and sanitary sewer, culvert and drainage structures
   c. Existing ground profiles and ground points
   d. Sidewalk profiles and/or top of curb profiles
   e. Cross road or street profiles
   f. Water table
   g. Rock/peat/muck undercut locations
   h. Existing underground utilities
      - Water
      - Gas
      - sanitary sewer

14.36.01 (continued)

i. Earthwork quantities (embankment, earth excavation, subbase, topsoil stripping, peat excavation, swamp backfill)
j. Type line information (side slope and ditch information, superelevation and transition information, curb and gutter information)
k. Soil erosion and sedimentation control key numbers

L. Interchange/Ramp/Cross Road Plan and Profile Sheets - same information needed, shown under Sections 10 & 11

M. Preliminary Wetland Mitigation Sheets with soil erosion and sedimentation control measures shown

N. Preliminary Rest Area/Landscaping Sheets
   a. ramp curve data
   b. clear vision areas
   c. soil erosion and sedimentation control measures

O. Preliminary Construction Staging
   a. Maintaining Traffic Sheets, staging typical sections, detour map

P. Soil Boring/Pavement Coring Sheets - plot locations on plans

Q. Preliminary Signing Plans

R. Preliminary Pavement Marking Sheets

S. Preliminary Traffic Signal Plans

T. Utility Sheets
   a. water
   b. lighting
   c. sewer

U. 21. Bridge Plans

14.74 (revised 9-21-2009)

DOCUMENT RETENTION

Once a project has been completed and closed-out, document retention for the project is necessary.

14.74.01 (revised 10-22-2012)

Permanent Records

Permanent, or indefinite, paper files and electronic documents, are to be stored in ProjectWise. (Permanent paper files must be scanned and saved in the PDF format prior to storing in ProjectWise.) Such documentation includes:

- PDF plan sheets with "as-built" changes and/or corrections
- Contract plans or proposal
- Agreement file
- Permit file

The following items should also be included in the permanent records as well:

- Drainage calculations
- Environmental Impact Statement
- Environmental Assessment
- Engineering Report
- Correspondence (only correspondence concerning design decisions on the project)
- Survey data (benchmark, government corner tie information only)
- Design exceptions
- Design project record

All other information, paper or electronically stored in ProjectWise, including review sets and calculations not described above, should be discarded. This specifically includes the Plan Review plans, OEC plans, design data, line and grade plans, office check plans, drainage approval plans, municipal approval plans and Health Department plans, etc.

2.02.06

Hydraulic and Scour Data

The Design Engineer must request hydraulic analyses from the Hydraulics/Hydrology Unit to determine required waterway openings, scour countermeasures, and backwater calculations for proposed stream crossings. In most cases, two waterway analyses will be required by the FHWA. To accomplish this in time, the Hydraulics/Hydrology Unit must be involved as early as possible. The Bridge Unit should request data from them immediately after the project is assigned.

The Hydraulics/Hydrology Unit will conduct a scour analysis and provide estimated total scour depths at the foundation for waterway crossings. This information will be forwarded to the Geotechnical Services Section.
(11-19-99)

2.02.07

Railroad Data

The Design Engineer must request information regarding frequency and speed of railroad movements, and information regarding clearances and loadings. Such requests must be submitted to the Railroad Coordination Unit – Office of Rail. See Chapter 13, Railroad Crossings, for additional details. (10-22-2012)

2.02.08

Aesthetic Recommendations

Consideration should be given to providing motorists with an unobstructed view of surrounding scenery. Toward this end the Roadside Development Unit should be consulted to determine whether an open railing is appropriate for a structure spanning a river.

2.02.09

Utility Data

The Design Engineer must determine whether there are utilities at the site of the structure and whether they will be affected by the proposed construction. The designer must also determine whether existing utilities may represent a safety hazard to the construction forces.

2.02.10

Permits (11-19-99)

The Design Engineer, along with Environmental Section of Project Planning Section, must determine which permits will be required for the proposed work and initiate actions to obtain those permits. See Chapter 14, Permit Applications, for additional information.

Application for MDNR/MDEQ permits should include detailed plans of any proposed haul route necessary to access the project site. See Section 2.02.15 for additional information.
(10-22-2012)

2.02.11

Screening Requests

When work is performed on structures in the Metro Region, the Region Project Development or Bridge Engineer must be contacted, to see if pedestrian screening should be added to the proposed work. In other areas of the state the Region Bridge Engineer should be contacted to determine if pedestrian screening should be added.
(9-2-2003)

2.02.12

Maintenance Reports

Before starting work on an existing structure, the Design Engineer should review the Maintenance Report/Bridge Scoping Report. An in depth inspection should be requested if the extent of repairs on specific bridge elements is unknown or may change the scope of programmed work. (11-19-99)

3.02.04 B. (continued)

Reviews (8-20-99)

A Preliminary Plan Distribution list is presented here as a general guide for determining the number of prints, estimates and letters required. Preliminary Plan Distribution forms are available from the supply room.

The Preliminary Plan prints are to be folded in individual sets of 8½" x 11". The sets are grouped into two groups: one group with estimates and the other group without estimate; they are then turned into the Plans & Field Review Section's secretary, along with the Preliminary Plan Distribution form, for letters and distribution.

After Preliminary Plan distribution, time should be taken to investigate and initiate any construction permits necessary for the project. Complete details are contained in Chapter 14.

A written response is required to reply to any review recommendations made during preliminary plan review or THE Plan Review Meeting. The response should verify compliance with review recommendations that will be incorporated into the plans, and provide an explanation for any comments received that cannot be included with the project. (8-6-92)

1. FHWA: Preliminary Plan prints are sent to the FHWA for all FHWA Oversight projects.

   The FHWA requires two sets of Preliminary Plan prints with estimate.

2. Design Files:
   A copy of the THE Plan Review Meeting letter is sent to the Design files.

3.02.04 B. (continued)

3. Railroad:

   Preliminary Plan prints are sent to the railroad companies as follows:

   Highway Over Railroad

   Two (2) sets of selected plan sheets (Title Sheet, General Plan of Site, General Plan of Structure, pier and crashwall detail sheets, plan sheets showing utilities within railroad right-of-way, and sheets showing how structure drainage is to be handled).

   Railroad Over Highway

   Three (3) complete sets

   Also, one set of Preliminary Plan prints is sent to the Railroad Coordination Unit – Office of Rail for all railroad grade separations.
   (10-22-2012)

   Contact the Railroad Separations Engineer for addresses of the affected railroads.

   When it is expected that temporary steel sheet piling will be required, the railroad should be requested to submit any specified requirements as to the size and extent of the sheeting.

4. Design Engineer-Bridge Management: One set of Preliminary Plan prints with estimate. No transmittal letter is required.

5. Design Engineer - Specifications and Estimates: One copy of the estimate. No plans or transmittal letter is required.

3.02.04 B. (continued)

Reviews (8-20-99)

6. USGS Stream Gauges:
   At sites where USGS stream gauges are located, two sets of Preliminary Plan prints should be sent to the U.S. Department of Interior for review and comments. If relocation of gauges is necessary, a letter requesting approval of relocation site, as shown on the plans, must accompany the prints.

7. Hydraulics/Hydrology Unit:
   The Hydraulics/Hydrology Unit is sent one set of Preliminary Plan prints of all projects involving waterways.

8. Unit Files:
   The Design Unit is required to keep one set of Preliminary Plan prints with a Preliminary Estimate in its files. Also, the Design Unit should have one set of reproducible copies of the Preliminary Plans; these can be used in obtaining prints of the Preliminary Plan, if necessary, after final plan preparation has begun.

C. THE Plan Review Meeting-Not Required

Occasionally, a project will not require THE Plan Review Meeting. In this case, the Project Manager shall distribute the Preliminary Plans as shown previously, along with an additional distribution as follows:
(8-6-92) (10-22-2012)

1. Region/TSC:
   Seven sets of Preliminary Plan prints with estimates are sent to the Region/TSC Project Development Engineer for all bridge projects. (8-6-92)

2. Construction & Technology Division:
   One set of Preliminary Plan prints with estimate and a copy of the transmittal letter to the Region/TSC is sent to the Engineer of Construction & Technology on all projects.

3.02.04 C. (continued)

3. Transportation Planning Services Division:
   Send one set of Preliminary Plan prints and a copy of the Region/TSC transmittal letter to the Manager of the Environmental Section. (8-6-92)

4. Road:
   The Road Design Section is sent two sets of Preliminary Plan prints. If the road design is being done by a consultant, then three sets are sent.

5. Municipally-Owned Utility Outside City Limits*:
   If the project is located outside the corporate limits of a city, but there are city-owned utilities in the project vicinity, send one set of prints of the Preliminary Plans to the Governmental Coordination Unit- Development Services Division for the file and two for each utility for forwarding. The Governmental Coordination Unit-Development Services Division is to be notified whether the bridge project is combined with a road contract.

6. City of (any except Detroit):
   Transmit the following to the Governmental Coordination Unit-Development Services Division
   - one set for the files, plus
   - one set for each nonparticipating city (population less than 25,000), or
   - two sets and one estimate of cost for each participating city, except
   - three sets and one estimate for Flint, Lansing, or Warren (for a list of participating cities see Subsection 3.02.05).

   In addition, provide the Governmental Coordination Unit- Development Services Division with two sets for each municipally-owned utility.

   The Governmental Coordination Unit-Development Services Division is to be notified if the bridge is to be let without a road contract.

3.02.04 C. (continued)

Reviews (8-20-99)

7. City of Detroit:
   Transmit 13 sets of Preliminary Plans and two estimates to the Governmental Coordination Unit-Development Services Division (one for file, 12 to be forwarded). If the bridge is to be let without a road contract, notify the Governmental Coordination Unit- Development Services Division

8. County Drain Commission:
   Two sets of Preliminary Plan prints are to be sent to the County Drain Commissioner for comments and/or approval. Also a copy of the transmittal is sent to the MDOT Drainage Coordinator in the Design Division, Bureau of Highway Development. (5-1-2000)

9. County of _____ :
   For all bridge projects involving county roads, two sets (three if Wayne County) of Preliminary Plan prints are to be sent to the county.

10. Consultant:
    If the consultant is doing the design for us, one set of Preliminary Plan prints with Preliminary Estimate is returned to them.

11. Geometrics Coordination Engineer:
    On all projects, the Geometrics Coordination Engineer is sent two sets of Preliminary Plan prints for comments.

12. Electrical Unit - Design:
    The Electrical Unit Leader is sent two sets of Preliminary Plan prints for all bridge projects where lighting is involved.

3.02.04 C. (continued)

13. Utilities-Permits Engineers:

    The Region/TSC Utilities/Permits Engineer and the Assistant Engineer of Utilities/Permits in Lansing are sent copies of the letters to the utility companies for all projects that involve utilities. No plans are required.
    (8-6-92)

14. Municipal Utilities Unit - Design:

    The Municipal Utilities Unit Leader is sent two sets of Preliminary Plan prints for all bridge projects involving water main or sanitary sewer designed by that unit.

3.02.05

Municipal Participation - Act 51 (8-20-99)

For bridge construction work, only certain activities qualify for participation by municipalities pursuant to Act 51. In general, participation is required for new construction of bridge and major modifications due to widening, upgrading, replacement, increase traffic volume or strengthening the structure. Non-participating activities, in general, are those that involve the routine maintenance or repair of these existing structures.

Work requested by local municipalities shall in general be 100% municipal participation. An agreement with chargeable expenses shall be required and administered through the Governmental Coordination Unit-Development Services Division. (8-20-2009) (10-22-2012)

The following is a list of participating and non-participating work items related to bridge projects:

A. Participating Items

1. Replacement or widening of a bridge deck for at least one continuous span. The bridge deck does not have to be full width, but is required to be at least one continuous span. If the deck is required to improve drainage, safety or the existing road alignment, then it's a participating item. The deck resurfacing or overlay must be a minimum of ¾" thick.

2. Trunkline approach work as required as part of a bridge project.

3. All preparatory work necessary for superstructure construction including hand chipping for the deck, hydrodemolishing and removal of existing pavement patches and joints.

4. Joint replacement as part of a deck overlay or deck replacement.

5. Pedestrian screening.

6. Any widening or replacement of piers, headwalls, and abutments necessary for superstructure construction.

3.02.05 (continued)

7. Structural steel replacement as part of a deck replacement project.

8. The installation, extension or betterment of guardrail protecting the bridge structure.

9. The removal and replacement of sidewalk as required.

10. All maintaining traffic items related to the participating items of the bridge project (i.e. pavement markings and barricades used for traffic control).

11. All necessary landscaping required for this construction, widening or major modification to these bridges.

12. Mobilization and miscellaneous items related to participating items of the bridge projects involving construction or modifications.

13. The removal and replacement of all Municipal Utilities. (5-1-2000)

B. Non-participating Items

1. Pin and hanger replacement.

2. Cleaning and coating existing structural steel.

3. Any patching or sealing work done on the substructure.

4. Rocker bearing realignment.

5. Removal and replacement of joints not part of a deck overlay.

6. Resurfacing of the trunkline approach with a length less than 500' or one city block and not related to participating bridge construction.

7. Resurfacing of the deck that is less than one continuous span.

7.03.01 (continued)

Abutment Design

B. Types

4. Integral and Semi - Integral Abutments

Integral and semi-integral abutments shall be used where practical to avoid deck joints. (5-1-2000)

Integral Abutment

Abutment walls (stub type) supported by one row of piles that allow movement through pile flexure (see Bridge Design Guide 6.20.04 series). Walls shall be a minimum of 5'-0" and 12'-0" maximum in height. The H-Pile webs shall be oriented parallel to the bridge reference lines and embedded 30" into the abutment wall. Upon recommendation from Geotechnical Services Section pile holes shall be prebored. In general, integral abutments do not have return wingwalls.

A separate design analysis needs to be performed on the abutment wall for active and passive pressures. Additional vertical dowels may be required at the abutment and backwall interface to resist the active surcharge and the passive resistance that have been introduced into the wall from bridge expansion. Additional vertical reinforcement may be required in the abutment wall and should also be designed. The pile spacing may need to be adjusted to prevent shear stress failure in the pile.

Due to scour considerations, the designer should usually avoid using Integral abutments at stream crossings. (5-1-2000)

Semi-Integral Abutment

Conventional abutment walls fixed in position with expansion and contraction movement of the bridge superstructure (see Bridge Design Guide 6.20.04 series). Abutments with a single row of piles should not be used.

7.03.01 (continued)

The following design criteria are valid for both types of abutments.

a. Steel bridges are to be less than 300'-0" and concrete bridges are to be less than 400'-0" in length.

b. Use approach slab details on Standard Plan R-45-Series when the length of bridge contributing to expansion at an abutment is less than 50'-0" for concrete beam bridges and less than 25'-0" for steel beam bridges. (11-28-2011)

c. Angle of crossing shall be 60 degrees minimum and 120 degrees maximum. See Section 7.01.14 for MDOT skew policy. (12-5-2005)

d. Backfill shall be “Backfill, Structure, CIP” as per Standard Specifications.

   Place aggregate base over structure backfill to support approach slabs, sleeper slabs and approach curb and gutter. (10-22-2012)

e. Pavement seats shall be 6" max and cantilevered pavement seats shall be avoided.

f. Approach slabs shall be 20'-0" in length, cast from sleeper slab towards reference lines at night with “Superstructure Concrete, Night Casting,” and match the road approach thickness (9" minimum) for all structures.

   Approach slabs can be 5’-0” with independent backwall (BDG 6.20.03A) or if service road proximity warrants the sleeper slab being close to the abutment and backwall. Consideration shall be given to a 20’ concrete approach pavement as detailed on Standard Plan R - 43&45 - Series located on the road approach side of the sleeper slab. (10-22-2012)

g. Continue bottom mat of steel 2'-0" past reference line into the approach slab.

7.03.01 (continued)

Abutment Design

B. Types

4. Integral and Semi-Integral Abutments

h. Add extra reinforcement over beams at the reference line that extend 2'-0" into the approach slab and 2'-0" into the bridge deck slab.

i. Attach approach curb and gutter to the approach slab with bottom mat transverse reinforcement and to the bridge deck with bottom mat longitudinal reinforcement. Do not attach curb and gutter to the approach slab or the bridge deck on structures with return wingwalls.

j. A sleeper slab shall be used with all approach slabs and shall have a stub (including hot mix asphalt (HMA) pavements). Concrete to concrete slabs shall have an EJ3 (or EJ4) joint on the bridge side of the stub and an E3 joint on the road side. Concrete to HMA slabs shall have an EJ3 (or EJ4) joint on the bridge side of the stub and no joint on the road (HMA) side. Provide elevations along stub of sleeper slab at construction centerline, lane lines and edge of metal. Provide elevations at toe of curb/barrier and top of curb if present. (12-5-2005)

C. Wall Design

1. Wall Thickness

The minimum wall thickness for abutments is 2'-0". This is to be increased in 2" increments when required to provide 4½" minimum clearance between edge of masonry plate (or elastomeric pad) and front face of the abutment. (8-6-92)

2. Cantilever Wall Design

Cantilever walls 16'-0" or higher are to be designed for both bending and direct stress.

7.03.01 (continued)

3. Steel Reinforcement

All wall reinforcement shall be epoxy coated. Horizontal bars in the front faces of abutment walls should be continued around the corners at the wingwalls. EC#6 bars are to be placed diagonally across the inside corners. (5-6-99)

4. Vertical Construction Joints

a. There is to be vertical continuity of all construction joints from the footing upward; however, a wall joint does not require a footing joint below.

b. Spacing

(1) Curtain wall abutments - 35'-0" maximum spacing.

(2) Cantilever abutments - 25'-0" maximum spacing.

5. Horizontal Construction Joints

For walls over 30'-0" high, there should be a horizontal construction joint approximately at mid-height. (9-2-2003)

6. Vertical Expansion Joints

Vertical expansion joints shall be spaced approximately 90'-0" apart. There should be a construction joint in the footing directly below each expansion joint in the wall.

7. Bridge Seat Steps

Where the bridge seat is stepped, the ends of the steps shall be at 45° to the bridge seat and parallel to the centerline of the bridge to accommodate any movement due to temperature changes. (5-6-99)

8. Pavement Seats

Pavement seats are to be provided on all bridges. They should be cantilevered from the rear face of independent backwalls. (5-6-99)

7.03.01 (continued)

Abutment Design

B. Types

4. Integral and Semi - Integral Abutments

Integral and semi-integral abutments shall be used where practical to avoid deck joints. (5-1-2000)

Integral Abutment

Abutment walls (stub type) supported by one row of piles that allow movement through pile flexure (see Bridge Design Guide 6.20.04 series). Walls shall be a minimum of 5'-0" and 12'-0" maximum in height. The H-Pile webs shall be oriented parallel to the bridge reference lines and embedded 30" into the abutment wall. Upon recommendation from Geotechnical Services Section pile holes shall be prebored. In general, integral abutments do not have return wingwalls.

A separate design analysis needs to be performed on the abutment wall for active and passive pressures. Additional vertical dowels may be required at the abutment and backwall interface to resist the active surcharge and the passive resistance that have been introduced into the wall from bridge expansion. Additional vertical reinforcement may be required in the abutment wall and should also be designed. The pile spacing may need to be adjusted to prevent shear stress failure in the pile.

Due to scour considerations, the designer should usually avoid using Integral abutments at stream crossings. (5-1-2000)

Semi-Integral Abutment

Conventional abutment walls fixed in position with expansion and contraction movement of the bridge superstructure (see Bridge Design Guide 6.20.04 series). Abutments with a single row of piles should not be used.

7.03.01 (continued)

The following design criteria are valid for both types of abutments.

a. Steel bridges are to be less than 300'-0" and concrete bridges are to be less than 400'-0" in length.

b. Use approach slab details on Standard Plan R-45-Series when the length of bridge contributing to expansion at an abutment is less than 50'-0" for concrete beam bridges and less than 25'-0" for steel beam bridges. (8-20-2009)

c. Angle of crossing shall be 60 degrees minimum and 120 degrees maximum. See Section 7.01.14 for MDOT skew policy. (12-5-2005)

d. Backfill shall be “Backfill, Structure, CIP” as per Standard Specifications.

   Place aggregate base over structure backfill to support approach slabs, sleeper slabs and approach curb and gutter. (10-22-2012)

e. Pavement seats shall be 6" max and cantilevered pavement seats shall be avoided.

f. Approach slabs shall be 20'-0" in length, cast from sleeper slab towards reference lines at night with “Superstructure Concrete, Night Casting,” and match the road approach thickness (9" minimum) for all structures.

   Approach slabs can be 5’-0” with independent backwall (BDG 6.20.03A) or if service road proximity warrants the sleeper slab being close to the abutment and backwall. Consideration shall be given to a 20’ concrete approach pavement as detailed on Standard Plan R - 43&45 - Series located on the road approach side of the sleeper slab. (10-22-2012)

g. Continue bottom mat of steel 2'-0" past reference line into the approach slab.

7.03.01 (continued)

Abutment Design

B. Types

4. Integral and Semi-Integral Abutments

h. Add extra reinforcement over beams at the reference line that extend 2'-0" into the approach slab and 2'-0" into the bridge deck slab.

i. Attach approach curb and gutter to the approach slab with bottom mat transverse reinforcement and to the bridge deck with bottom mat longitudinal reinforcement. Do not attach curb and gutter to the approach slab or the bridge deck on structures with return wingwalls.

j. A sleeper slab shall be used with all approach slabs and shall have a stub (including hot mix asphalt (HMA) pavements). Concrete to concrete slabs shall have an EJ3 (or EJ4) joint on the bridge side of the stub and an E3 joint on the road side. Concrete to HMA slabs shall have an EJ3 (or EJ4) joint on the bridge side of the stub and no joint on the road (HMA) side. Provide elevations along stub of sleeper slab at construction centerline, lane lines and edge of metal. Provide elevations at toe of curb/barrier and top of curb if present. (12-5-2005)

C. Wall Design

1. Wall Thickness

The minimum wall thickness for abutments is 2'-0". This is to be increased in 2" increments when required to provide 4½" minimum clearance between edge of masonry plate (or elastomeric pad) and front face of the abutment. (8-6-92)

2. Cantilever Wall Design

Cantilever walls 16'-0" or higher are to be designed for both bending and direct stress.

7.03.01 (continued)

3. Steel Reinforcement

All wall reinforcement shall be epoxy coated. Horizontal bars in the front faces of abutment walls should be continued around the corners at the wingwalls. EC#6 bars are to be placed diagonally across the inside corners. (5-6-99)

4. Vertical Construction Joints

a. There is to be vertical continuity of all construction joints from the footing upward; however, a wall joint does not require a footing joint below.

b. Spacing

(1) Curtain wall abutments - 35'-0" maximum spacing.

(2) Cantilever abutments - 25'-0" maximum spacing.

5. Horizontal Construction Joints

For walls over 30'-0" high, there should be a horizontal construction joint approximately at mid-height. (9-2-2003)

6. Vertical Expansion Joints

Vertical expansion joints shall be spaced approximately 90'-0" apart. There should be a construction joint in the footing directly below each expansion joint in the wall.

7. Bridge Seat Steps

Where the bridge seat is stepped, the ends of the steps shall be at 45° to the bridge seat and parallel to the centerline of the bridge to accommodate any movement due to temperature changes. (5-6-99)

8. Pavement Seats

Pavement seats are to be provided on all bridges. They should be cantilevered from the rear face of independent backwalls. (5-6-99)

8.09.04 (continued)

Maintenance Painting Notes

AA. The plate surfaces of the main girder splices, and all other bolted connections unless noted otherwise, shall be coated according to subsection 716.03.B.2.a for Slip Critical Connections. Coated connections (faying surfaces) shall meet the minimum cure times according to the product qualification test and subsection 716.02 before connection assembly. (11-28-2011)

BB. This bridge was coated with the following paint system:

Manufacturer: _____
Primer: _____
Intermediate(s): _____
_____
Top Coat: _____

(This information is to be filled in by the Engineer when submitting "as constructed" plans.) [Add note to all painting projects.](11-28-2011)

8.09.04 (continued)

Maintenance Painting Notes

AA. The plate surfaces of the main girder splices, and all other bolted connections unless noted otherwise, shall be coated according to subsection 716.03.B.2.a for Slip Critical Connections. Coated connections (faying surfaces) shall meet the minimum cure times according to the product qualification test and subsection 716.02 before connection assembly. (8-20-2009)

BB. This bridge was coated with the following paint system:

Manufacturer: _____
Primer: _____
Intermediate(s): _____
_____
Top Coat: _____

(This information is to be filled in by the Engineer when submitting "as constructed" plans.) [Add note to all painting projects.](11-28-2011)

11.02.01 (continued)

General Procedure

F. Distribution

1. MDOT

From ProjectWise, send an email link from PLANREV1.PDF, to all affected "MDOT" staff notifying them that a plan revision is available. List of possible recipients includes:

a. Construction Files
b. TSC Delivery Engineer
c. Bridge Design Unit (if structure affected)
d. Road Design Unit (if grade, alignment or drainage affected)
e. Bridge Management Unit – Design Division (Load Rating Engineer) (if change affects load capacity of structure)
f. Structural Fabrication Unit – Operations Field Services Division (if change affects beams or other structural elements)
g. Utilities-Permits Section – Development Services Division (if change in quantities chargeable to a utility company)
h. Railroad Coordination Unit – Office of Rail

11.02.01 (continued)

2. Non-MDOT

Distribute copies of Revision of Plans Form 291 and the revised plan sheets (if required) in Adobe Acrobat "PDF" format, to any "non-MDOT" affected agencies. List of possible recipients includes:

a. FHWA (FHWA oversight projects) See Section 11.02.03
b. Consultant
c. City (if participating)
d. County (if participating)
e. County Drain Commission
f. Utility
g. Steel Reinforcement Fabricator
h. Fabricator (if structural steel or prestressed concrete is affected)

1) Steel beams or pile bents
2) Tube railing
3) Bearings
4) Expansion joint device
5) Stay in place forms
6) PC beams
7) MSE wall units
8) Culverts

(10-22-2012)

11.02.02

Plan Revisions Involving Shop Details and Suppliers

Plan revisions involving shop details and suppliers will always require that revised detail sheets be included with Revision of Plans Form 291.

11.02.03

Plan Revisions Involving FHWA Oversight Projects

A. Plan revisions involving **FHWA Oversight** projects that originate in Design Division are to be reviewed by and discussed with the FHWA before they are distributed. (8-6-92)

B. Indicate on Revision of Plans Form 291 the date of FHWA approval. (10-22-2012)

C. Exceptions to the above would be plan revision(s) involving dimensions, small changes in quantities, or a similar omission in the plans.

11.02.04

Plan Revisions Involving Utilities

On a plan revision involving a change in quantities chargeable to a utility company, send a ProjectWise email link from PLANREV1.PDF to the Utilities-Permits Section in the Development Services Division. (8-20-2009) (10-22-2012)

11.02.05

Plan Revisions Affecting the Load Carrying Capacity of the Structure

If the plan revision will affect the load-carrying capacity of the structure, send a ProjectWise email link from PLANREV1.PDF to the Bridge Management Unit (Load Rating Engineer) of the Design Division. (8-20-2009) (10-22-2012)

11.02.06

Plan Revision on Package Contracts (8-20-2009)

A. On plan revisions concerning bridges in package contracts, where more than one bridge is involved, it is necessary to identify the structure, sheet number(s) and detail(s) involved on the Revisions of Plans Form.

B. Separate plan revisions should be made for each structure involved even though the revisions are the same or are distributed at the same time.

CHAPTER 13

RAILROAD CROSSINGS

13.00

RAILROAD CROSSINGS

While there is an occasional at-grade railroad crossing on a freeway, it can be assumed that a structure will be built to separate the rail traffic from the highway traffic. For a discussion of at-grade railroad crossings, refer to Chapter 12 of the Road Design Manual. Grade separations will be discussed in this chapter.

For grade separations on a free access road, the Economic Analysis Unit, Program Planning Division, Bureau of Transportation Planning will calculate the cost/benefit ratio based on a given time period (usually 50 years). The cost/benefit ratio must equal at least 1.0 for the grade separation to be economically justified.

13.01

IDENTIFICATION OF GRADE SEPARATIONS

When a railroad is carried over the highway, the structure identification will be by X (i.e., X09 of 82022); and when a highway is carried over the railroad, the identification will be by R (i.e., R01 of 63041).

13.02

AGREEMENT PREPARATION

All work performed on either existing or new grade separations is subject to approval by the Railroad that has jurisdiction over the tracks. An agreement, if required, covering the work is prepared by the Governmental and Railroad Coordination Unit of the Design Division.

13.02.01

Railroad Contacts

The Railroad Grade Separations Engineer of the Railroad Coordination Unit – Office of Rail will contact the Railroad when the programming letter for the project is issued. They will request the Railroad to submit an estimate for preliminary engineering. This estimate includes the cost of reviewing agreements, special provisions, preliminary and final plans, preparation of force account plans and estimates, and cost of attendance at meetings. After a letter of agreement or other arrangements for preliminary engineering has been made and FHWA approval has been received, the Railroad is authorized to start preliminary engineering work. No plans should be sent to the Railroad until after the Railroad is authorized to start preliminary engineering.

It is important to note that Railroads require anywhere from eight months to one and a half years (or longer, depending on project complexity and the particular Railroad) after receipt of preliminary plans to complete their reviews, prepare force account estimates, and sign the agreement. As Railroad agreements are needed before advertising, letting, and awarding a project, sufficient time must be allowed for the Railroad to complete its process. (1-14-2000)

13.02.02

Agreement Plans

The agreement with the Railroad contains exhibits showing the general features of the proposed work. The Design Engineer-Bridge shall prepare appropriate plan sheets. Normally the General Plan of Site and General Plan of Structure will suffice but special details such as runarounds, drainage plans, and right-of-way must be included. These exhibits (generally in Adobe "PDF" format) shall be submitted to the Railroad Grade Separations Engineer. (8-20-2009)

13.02.03

Force Accounts

The Railroad Grade Separations Engineer of the Railroad Coordination Unit – Office of Rail will request the Railroad to submit an estimate of the Force Account work to be performed by the Railroad. This Force Account work will normally be paid through a separate job number initiated by the Railroad Grade Separations Engineer; however there may be some projects for which the cost of the Force Account work will be included in the estimated cost of the bridge project number. The Railroad Grade Separations Engineer will notify the Design Engineer - Bridge if the Force Account work is to be included in the bridge project job number. (1-14-2000)

13.02.04

Easements

The Railroad Grade Separations Engineer will indicate on the General Plan of Site sheet the desired highway easement across Railroad right of way for highway purposes. He/she will obtain Railroad approval and then forward the Railroad approved easement plan to the Design Engineer - Bridge for transmittal to the Real Estate Division as part of the final right-of-way requirements.

The Real Estate Division will prepare all legal documents of easement granted by the Railroad to MDOT.

13.02.05

Final Agreement

The Final Agreement, if required, will be processed through the Railroad Coordination Unit – Office of Rail in the normal manner. Final approval of the agreement by the Railroad, and MDOT, will give the Railroad the right to approve the plans as prepared by MDOT. Before a project may be advertised, let, and awarded, MDOT must have obtained the Railroad's approval of the plans and Final Agreement. (1-14-2000)