Road & Bridge Design Publications

Monthly Update – May 2013

Revisions for the month of **May** are listed and displayed below. Contact Wayne Pikka (pikkaw@michigan.gov) for questions regarding the road changes. Contact Vladimir Zokvic (zokvicv@michigan.gov) for questions related to the bridge changes.

Special Details

Special Detail 99: Chain Link Fence with Wire Rope: Since it is seldom used, former Standard Plan R-99-B (which was in special detail status) was converted to a permanent special detail and given the new title "Special Detail 99". This will distinguish it from standards that are in "interim" special detail status.

Road Design Manual

2.05.02M: Plan Preparation-Alternative Controls: A reference to section 11.05 (for special provision preparation and approval guidelines) was revised to Chapter 11 to match revisions to the Chapter.

3.06: Design Speed: A reference to 14.11 was added.

6.02.12: Grade Lift: A reference to Standard Plan R-115-Series was removed.

6.04.04: Concrete Pavement, 6.04.07: Plain Concrete Pavement & 6.04.08: Concrete Base Course: References to Standard Plan R-39P-Series and R-43P-Series were removed.

Chapter 11: Specification and Special Provisions: Chapter 11 has been restructured and re-issued. The revision updates the Special Provision format & procedures and migrates all material pertaining to estimates and lettings to Chapter 14 (revisions attached). It also updates material regarding procedures for inclusion of proprietary items. The new form for certification and approval of proprietary items is now available on-line as Form 0304. The revised chapter is not attached below but can be view on-line at: http://mdotcf.state.mi.us/public/design/files/englishroadmanual/erdm11.pdf

14.03: Estimates and Lettings: This section replaces the previous section titled "Freedom of Information", which was eliminated. The section comes from updated information transferred from Chapter 11.

14.04: Litigation: This section was deleted.

Road & Bridge Design Publications

Monthly Update – May 2013

14.11: Design Exceptions: References to the "Engineer of Design" were revised to the "Engineer of Design Programs".

14.25: Request for Special Soils Investigations: "Operations Field Services Division" was revised to "Construction Field Services Division".

14.62: Contractor Inquiries: This section was rewritten & updated to current practice and replaces information formerly located in section 11.05B.

14.63: Addenda: This section was rewritten & updated to current practice and replaces information formerly located in section 11.05C.

14.64: Postponement, Withdrawal, or Rejections from Letting: Information formerly referred to in Section 11.05D was updated to current practice and relocated to this section.

14.65: Reference Information Documents: This section replaces the previous section titled "Transmittal of Cross Sections".

14.66: Tabulation of Bids: The directions for accessing Bid Tabs were revised along with minor editorial changes.

Bridge Design Manual

The following sections have updated links to MDOT websites or MDOT forms but are not included in this update. The updates are reflected on the MDOT Bridge Design Manual website and the particular chapters.

2.02.14
2.02.15
2.02.18
12.08.03 B

Chapter 2 Table of Contents & 2.02.04: Updated title of Survey/Mapping Action Request Form 0226 and website link.

2.02.20 A. 1. & 3: Updated Form 2604 located within MPINS system and cost estimate worksheet and key links.

Road & Bridge Design Publications

Monthly Update – May 2013

7.01.08 LFD & LRFD: Updated link to Exempt Structures.

7.01.08 LFD & LRFD: Updated link to Michigan Interstate Vertical Clearance Exception Coordination Form 0333.

9.00: CAD drafting standards are now obsolete. Information is now contained in MicroStation related files and on the MDOT Design Services website.

9.02.03: Naming conventions of MDOT road and bridge files can be found on the MDOT V8i CADD File Naming Standards document/link.

10.02.02, 10.02.03 & 10.04.02: Updated locations where sections switched divisions within MDOT.

10.04.01: Added information regarding contractor design of cofferdams, sheet piling, etc. which needs to be reviewed by a private geotechnical engineer.

11.02.01 B: Updated Revision of Plans Form 291 and Plan Revision Distribution Form 211.

Chapter 12 Table of Contents, Appendix 12.09.02 & 12.09.02: Deleted Appendix 12.09.02 and updated table of contents and section 12.09.02 to reflect changes. Links were added to section 12.09.02 to reflect two matrices, one for uncoated black bar and one for epoxy coated rebar.

12.01.02: Updated title and link to Michigan Structural Inventory and Appraisal Coding Guide.

12.03: Updated title and link to Design Exception Request Form FC26 and Instructions.

12.03.01 A: Updated title and link to Traffic Analysis Request Form 1730.

Updates to MDOT Cell Library, Bridge Auto Draw Program, etc., may be required in tandem with some of this month's updates. Until such updates to automated tools can be made, it is the designer's/detailer's responsibility to manually incorporate any necessary revisions to notes and plan details to reflect these revisions.

Index to Special Details

5-28-2013

⑥

SPECIAL DETAIL NUMBER	NUMBER OF SHEETS	TITLE	CURRENT DATE
21	2	GUARDRAIL AT INTERSECTIONS	5-24-01
24	5	GUARDRAIL ANCHORED IN BACK SLOPE TYPES 4B & 4T	7-22-02
*99	2	CHAIN LINK FENCE WITH WIRE ROPE	11-1-00
R-126-I	5	PLACEMENT OF TEMPORARY BARRIER	3-26-12

*** Denotes New or Revised Special Detail to be included in projects for (beginning with) the August letting.**

Note: Former Standard Plans IV-87, IV-89, IV-90, and IV-91 Series, used for building cast-in-place concrete head walls for elliptical and circular pipe culverts, are now being replaced with plans that detail each specific size. The Municipal Utilities Unit will provide these full sized special details for inclusion in construction plans for MDOT jobs. To assure prompt delivery, requests ***must*** be made in advance.

Former Standard Plans IV-93 and IV-94 series have been replaced with precast concrete box & three-sided culverts as per the 2012 Standard Specifications for Construction.

Index to Bridge Detail Sheets

5-28-2013

⑦

DETAIL NUMBER	NUMBER OF SHEETS	TITLE	CURRENT DATE
EJ3Z	1 or 2	EXPANSION JOINT DETAILS	6-8-11
EJ4M	1 or 2	EXPANSION JOINT DETAILS	6-8-11
PC-2G	1	70" PRESTRESSED CONCRETE I-BEAM DETAILS	3-31-06
PC-4E	1	PRESTRESSED CONCRETE 1800 BEAM DETAILS	3-31-06
PC-1L	1	PRESTRESSED CONCRETE I-BEAM DETAILS	7-12-06

*** Denotes New or Revised Special Detail to be included in projects for (beginning with) the August letting.**

Note: Details EJ3Z & EJ4M are interactive, i.e. designers and detailers choose details based upon railing type and angle of crossing. Place all details appropriate for the project, structure specific information, and the Expansion Joint Device quantity on the sheet. The sheet shall then be added to the plans as a normal plan sheet.

Detail PC-1L, PC-2G and PC-4E shall have structure specific information and quantities added to the sheet. The sheet shall then be added to the plans as a normal plan sheet.

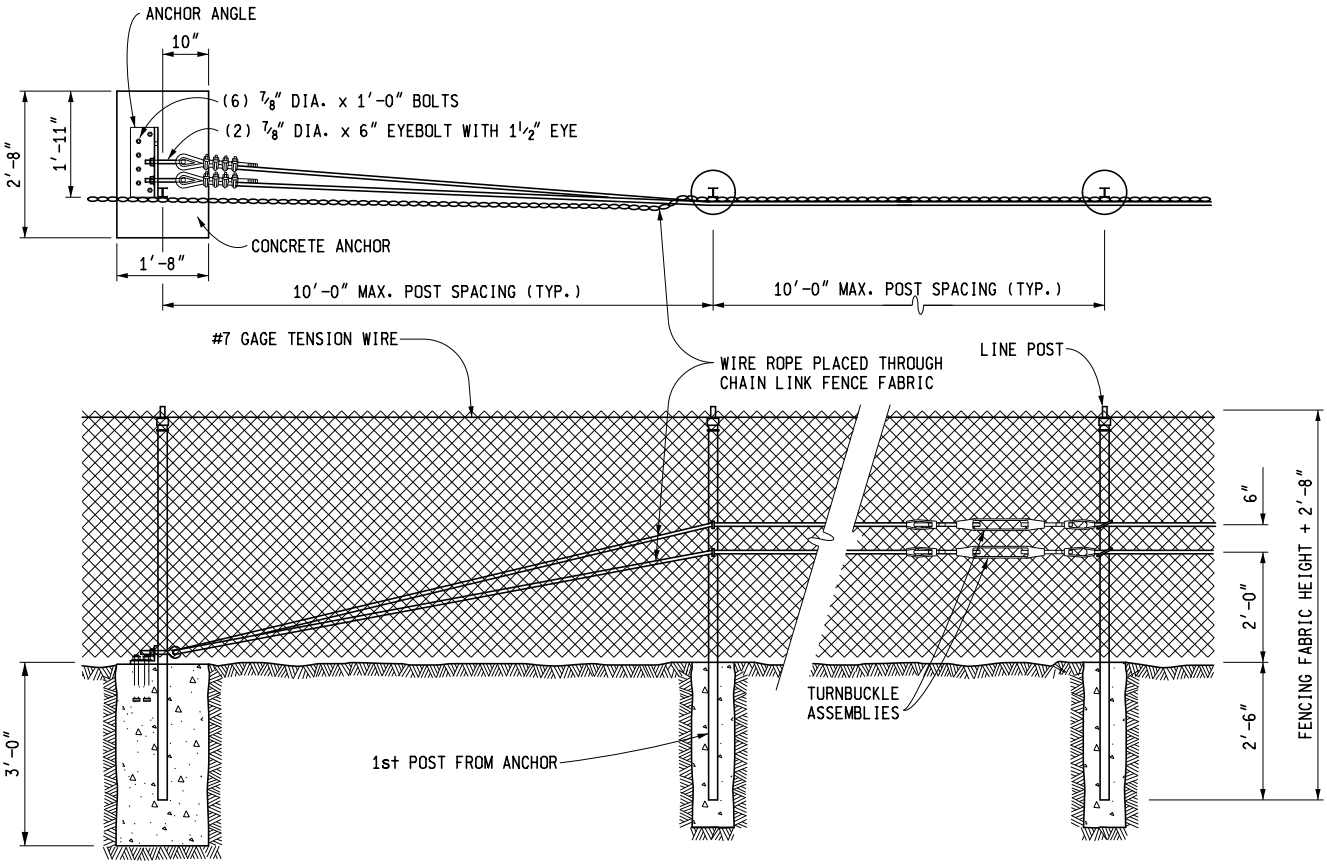

ELEVATION

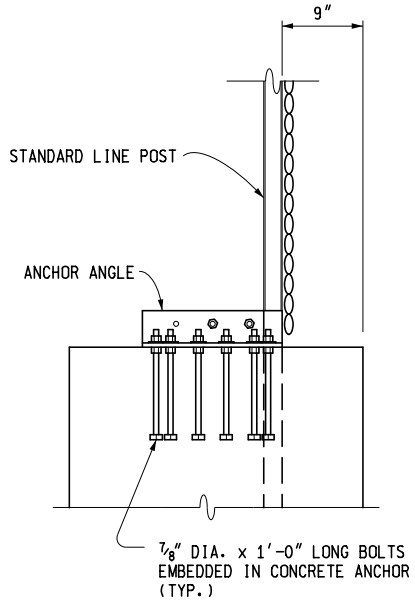

END VIEW OF CONCRETE ANCHOR

CONCRETE QUANTITY FOR ANCHOR = 0.5 CYD

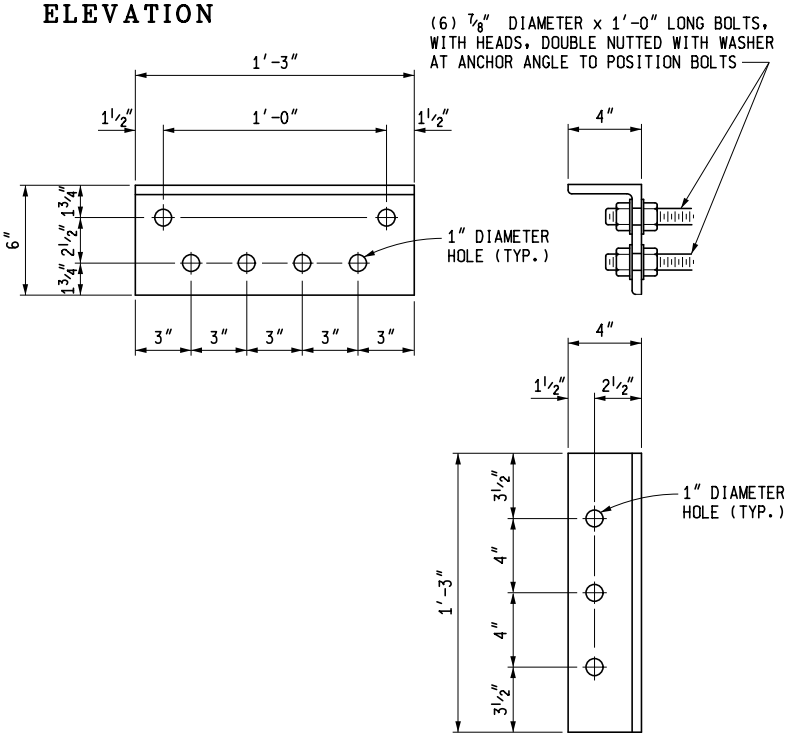

L6" x 4" x 1/2" x 1'-3" LONG ANCHOR ANGLE

MDOT Michigan Department of Transportation	DEPARTMENT DIRECTOR Kirk T. Steudle	MICHIGAN DEPARTMENT OF TRANSPORTATION BUREAU OF HIGHWAY DEVELOPMENT SPECIAL DETAIL FOR
PREPARED BY DESIGN DIVISION	APPROVED BY: _____ DIRECTOR, BUREAU OF FIELD SERVICES	CHAIN LINK FENCE WITH WIRE ROPE
DRAWN BY: B.L.T. CHECKED BY: W.K.P.	APPROVED BY: _____ DIRECTOR, BUREAU OF HIGHWAY DEVELOPMENT	F.H.W.A. APPROVAL · 11-1-2000 PLAN DATE · SPECIAL DETAIL 99 · SHEET 1 OF 2

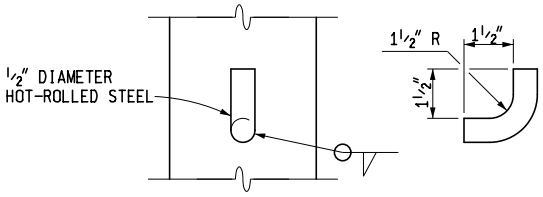

NOTE:
THE WELDED 1/2" DIAMETER HOT-ROLLED BAR AND THE WIRE ROPE SHALL BE FASTENED TO THE LINE POSTS THAT ARE SPECIFIED ON STANDARD PLAN R-98-SERIES.

1/2" DIAMETER HOT ROLLED BAR

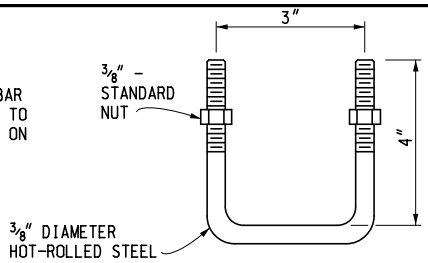

U-BOLT WITH NUTS

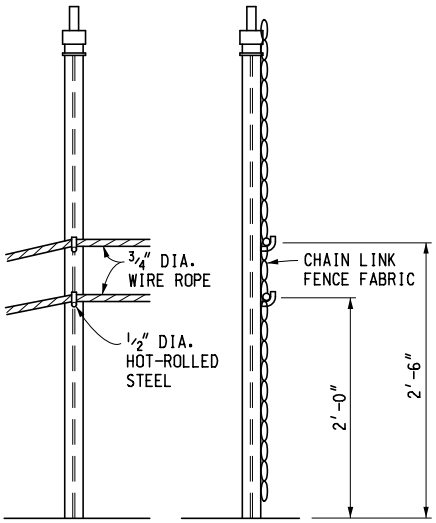

1st POST FROM ANCHOR

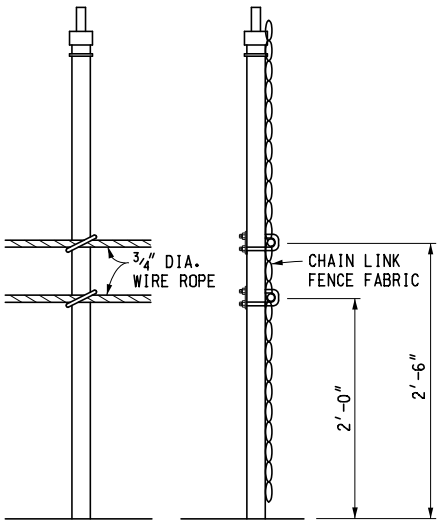

WIRE ROPE INSTALLED TO LINE POST WITH U-BOLTS

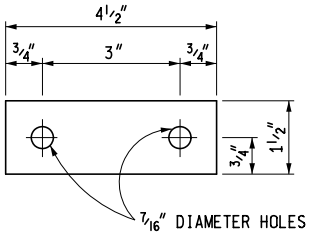

U-BOLT WASHER

1/4" THICK HOT-ROLLED STEEL

3/4" DIAMETER WIRE ROPE (3 X 7)

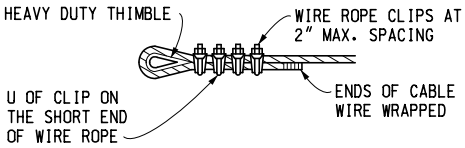

WIRE ROPE LOOP ENDING

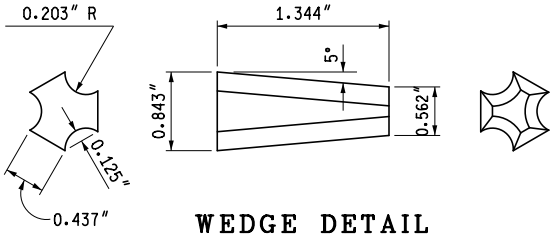

WEDGE DETAIL

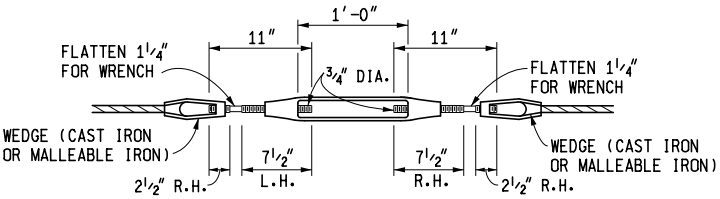

TURNBUCKLE WIRE ROPE ASSEMBLY

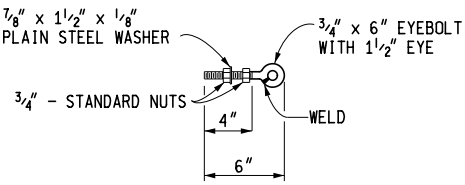

WELDED EYE-BOLT WITH NUTS & WASHER

NOTES:

CHAIN LINK FENCE WITH WIRE ROPE SHALL BE INSTALLED ACCORDING TO THIS PLAN AND STANDARD PLAN R-98-SERIES. THE WIRE ROPE SHALL BE ANCHORED ACCORDING TO THIS PLAN AND INSTALLED ON STANDARD FENCE POSTS FOR CHAIN LINK FENCE WITH CHAIN LINK FABRIC PLACED ON THE INSIDE OF WIRE ROPE. THE POST NEXT TO THE ANCHORAGE REQUIRES SPECIAL FABRICATION (SEE DETAIL). ALTERNATE DESIGNS MAY BE SUBMITTED TO THE ENGINEER FOR CONSIDERATION AND APPROVAL.

ALL POSTS, WIRE ROPES, AND FITTINGS SHALL BE GALVANIZED ACCORDING TO THE CURRENT STANDARD SPECIFICATIONS.

ALL WELDING SHALL BE DONE ACCORDING TO THE CURRENT STANDARD SPECIFICATIONS. TURNBUCKLES SHALL BE OF THE OPEN TYPE AND SHALL EACH PROVIDE A MINIMUM TAKEUP OF 1'-0".

ANCHORAGE SHALL BE PROVIDED ON EACH END OF CABLES WITH ONE TURNBUCKLE FOR EACH 500' RUN OF WIRE ROPE. MAXIMUM DISTANCE BETWEEN ANCHORAGES SHALL BE 1000'. WHEN PLACING WIRE ROPE IN EXISTING FENCE, THE CONCRETE ANCHORS MAY BE PLACED 2'-0" BEYOND THE 10'-0" TYPICAL POST SPACING, LEAVING THE EXISTING POST IN PLACE.

TENSION WIRE SHALL BE STRETCHED TAUT.

TOP AND BOTTOM SELVAGES OF FENCE FABRIC SHALL HAVE A KNUCKLED FINISH.

MICHIGAN DEPARTMENT OF TRANSPORTATION
BUREAU OF HIGHWAY DEVELOPMENT SPECIAL DETAIL FOR

CHAIN LINK FENCE WITH WIRE ROPE

F.H.W.A. APPROVAL	11-1-2000 PLAN DATE	SPECIAL DETAIL 99	SHEET 2 OF 2

2.05.02 (revised 5-28-2013)

Plan Preparation

Soil erosion and sedimentation control measures and locations are detailed on the plans for the areas within the limits of earth disturbance. Unless stated otherwise in the contract documents, the limits of earth disturbance will extend ten feet beyond the slope stake line except in areas adjacent to wetlands where the earth disturbance limits will be at the slope stake line. The extra ten feet is allowance for the movement of equipment and materials.

The SESC measures established for the project must provide adequate controls within the entire limits of earth disturbance. Noncontiguous clearing areas must also be considered when setting up SESC measures on the plans.

SESC measures must suit the specific construction project. Each of the following must be considered in preparation for selecting specific measures:

- Specific requirements included in environmental permits
- Project clearance mitigation (Form 1775)
- Extent of earth disturbance on the project
- Soil types in the construction area
- Steepness and length of slopes
- Water resources on and adjacent to the project
- Staging and sequence of the construction activity
- Duration of the project
- Increase in impervious surface area
- Potential equipment egress points

2.05.02 (continued)

By the preliminary plan review stage, the designer should have completed an analysis of the potential for soil erosion and sedimentation to occur during the construction phase. The soils engineer and others should have been contacted for suggestions. A combination of standard and site specific E&S measures should be incorporated and adequate pay item quantities included giving the contractor and construction staff the tools they will inevitably need to execute the project.

The following discussion is not intended to be all-inclusive but rather to get the designer thinking about what must be considered and how they can be mitigated by the careful selection of SESC pay items.

A. Construction Staging

While the designer often does not know exactly when construction will begin on a project, it is necessary to consider how the progression of the work may impact the need for SESC. Refer to specific environmental permits and clearance documents for any seasonal limitations that may influence the selection and quantities of various SESC measures. In addition to providing a variety of pay items and miscellaneous quantities, it may be beneficial to include plan notes requiring placement of SESC measures prior to starting specific earth disturbing activities within the construction area.

B. Sensitive Areas

Minimize and clearly mark all clearing limits near sensitive areas on the plan and include quantities of silt fence (E&S-26) or protective fencing to protect sensitive areas and their buffers (E&S-6). Call for retaining existing vegetation in an undisturbed state in these areas to the maximum extent practicable. Call for permanent stabilization and installation of permanent SESC measures in these areas as early in the construction process as feasible.

2.05.02 (continued)

Plan Preparation

I. Slope Protection

Design cut-and-fill slopes in a manner that will minimize erosion potential by:

- Reducing continuous length and steepness of slopes with terracing and diversions
- Avoiding steep longitudinal grades
- Avoiding steep side slopes
- Minimizing disturbed areas
- Retaining existing vegetation
- Conforming to the existing contours and drainage of the area
- Calling for Slope Roughening and Scarification (E&S-32)

J. Concentrated Flows

Protect disturbed areas from concentrated flows routed through temporary conveyances, such as Diversion Dike (E&S-10), Intercepting Ditch (E&S-11), Intercepting Ditch and Diversion Dike (E&S-12), or Pipe Drop (E&S-17). Consult the Hydraulics Unit for guidance on sizing the conveyance whenever runoff or groundwater must be intercepted and concentrated.

K. Riprap

When Riprap (E&S-7) is called for to stabilize a ditch or outlet, consider calling for Silt Fence (E&S-26) or Mulch Blanket (E&S-33) to be placed adjacent to the riprap. The will prevent sediment from adjacent unprotected areas from being deposited in the riprap and being carried into the receiving water or off the right-of-way during the next rainfall event.

2.05.02 (continued)

L. Inlet Protection

Include inlet protection to protect all in-service storm drain inlets from sediment or construction related pollutants. Take into consideration inlets located down gradient on side streets and cross roads in addition to those on the mainline. Consider the location of the project in terms of soils, anticipated rainfall and urban/rural nature of the area and include adequate quantity of these measures to allow for replacement as they lose their effectiveness due to fine sediment accumulation

M. Alternative Controls

New materials are continually being introduced to the construction market as a result of the expansion of the NPDES stormwater program. If a project warrants their use, contact Construction Field Services Division for assistance with the selection of a previously approved special provision or for assistance in preparing a project specific special provision to address a particular need. Refer to Chapter 11 for special provision preparation and approval guidelines.

3.05

Section deleted.

3.06 (revised 5-28-2013)

DESIGN SPEED

Design speed is a selected speed used to determine the various geometric design features of the roadway. Once selected, all of the pertinent design features of the highway should be related to the design speed to obtain a balanced design.

Design speeds shown in Appendix 3A are applicable for 4R projects. The design speed used for freeway 3R projects (interstate and non-interstate) may be the design speed approved at the time of original construction or reconstruction, whichever is most recent. The design speeds used for non-freeway 3R projects are shown in Section 3.09.02. See Section 3.08.01C for information on combined 3R and 4R work.

It is MDOT practice under most circumstances to design roadway geometrics based on a recommended project design speed 5 mph greater than the posted speed (See Appendix 3A, Geometric Design Elements and Section 3.09.02A, 3R Minimum Guidelines, Non-Freeway NHS). This practice is founded in research that shows actual operating speeds are typically greater than the posted speeds. Posted speed is generally used as project design speed only for non-freeway, non-NHS 3R design (Section 3.09.02B). The designer should strive to meet the standards for all geometric elements based on the prescribed MDOT recommended design speeds. This is the project design speed to be recorded on the title sheet.

3.06 (continued)

Design elements not meeting standards based on MDOT recommended design speeds require a Safety Review, Crash Analysis and documented justification (use Design Exception Form FC26). If the highest attainable design corresponds to criteria for speeds less than the posted speed (except where permitted in Section 3.09.02B for non-NHS 3R), a design exception must be submitted to the Engineer of Design Programs for approval. For additional information see Section 14.11.

For designs meeting criteria for a speed greater than or equal to the posted speed but less than MDOT recommended design speed, the project manager must still document the basis for not meeting standards for MDOT recommended design speed. This internal documentation (including Form FC26 signed by the Project Manager, Safety Review and Crash Analysis) must be retained in the project files and in the final document retention when closing out the project files. A copy of the documentation must also be sent to the Design Division's Geometrics Unit.

It should be indicated on Form FC26 if subsequent approval by the Engineer of Design Programs is required or if the documentation is for file retention only.

Documentation must be for each geometric element and not a blanket statement applying to all geometric elements. A design speed reduction for individual geometric elements does not redefine the overall "project design speed".

6.02.10

Aggregate Approaches

It is the practice of the Department to construct an HMA surface on all existing gravel approaches to the trunkline (see Section 12.02.03). The purpose is primarily to keep loose gravel off the through pavement.

6.02.11 (revised 11-28-2011)

Aggregate Additives

A. General

Calcium chloride and water used to facilitate shaping and compaction are not paid for separately, but are included in other contract items.

B. Dust Palliative Pay Item

Calcium chloride used as a dust palliative, as when maintaining traffic, should be estimated at the rate of 7.5 tons per mile of two-lane width (or two-shoulder width). The pay item is "Dust Palliative, Applied."

6.02.12 (revised 5-28-2013)

Sand Lift (Grade Lift)

Sometimes, rather than surfacing a road surface or removing it for replacement, a sand lift is used above the old pavement. Use of this method of construction has declined as recycling techniques have been improved thereby increasing the value of old pavement surfaces. A sand and gravel cushion of less than 18 inches should not be used, because there is evidence that reflective cracking is not significantly prevented in a flexible pavement. Experience has also shown that when a **gravel** lift is compacted, the percentage of fines increases, resulting in a dense-graded mixture which tends to trap water. An HMA base course should be used instead. An added advantage to using an HMA base course is the ease of maintaining traffic during construction.

When a sand lift is used and a transition is necessary to meet the existing pavement surface, the transition should be as illustrated below.

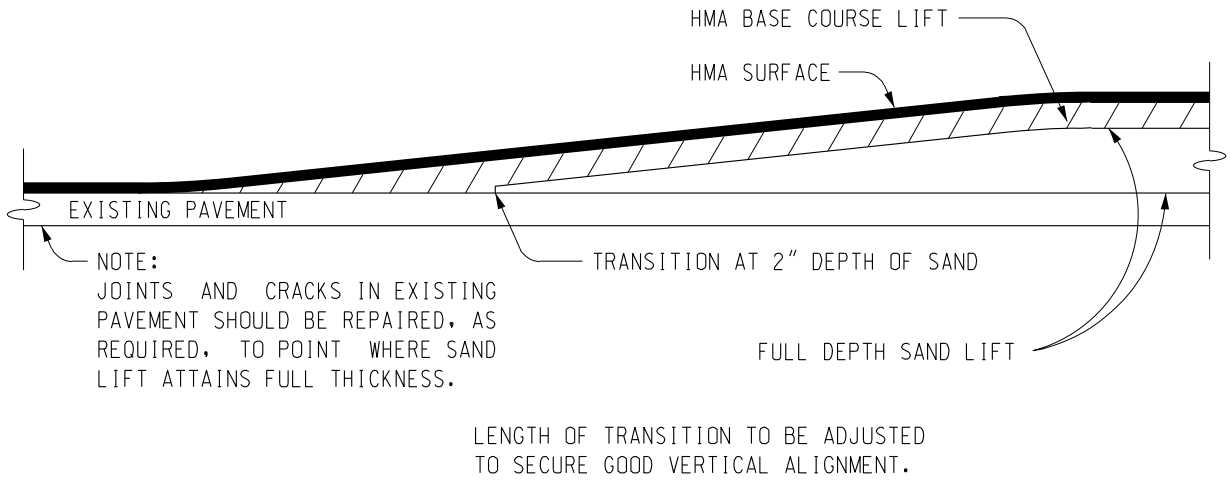

SAND LIFT TRANSITION OVER OLD PAVEMENT
To be used when old pavement is not removed.

6.04.03 (continued)

Characteristics of Concrete Pavement

Concrete pavement has a tendency to curl upward when saturated by moisture on the underside or when the temperature of the top surface is lower than that at the bottom. This tendency is most evident at night and is manifested in greater pavement edge deflection due to curl.

Concrete pavement has a tendency to lose its ability to accommodate expansion over the years, which is evidenced by open joints that don't close up when warmer temperatures return. This is usually the result of dirt and incompressibles entering joints and cracks and effectively filling up any available expansion space, or from actual expansion of the concrete due to alkali-silica or alkali-carbonate reactions and/or freeze-thaw deterioration. This phenomenon can have serious consequences when, for example, it results in excessive expansion pressures on the backwall of a bridge, or causes blow-ups at weakened pavement joints.

Admixtures can change the characteristics of portland cement concrete, particularly during the casting and setting stages. Plasticizers can increase the slump, and thus the workability, without changing the water-cement ratio. Calcium chloride will increase the heat of hydration, important in the winter time to allow the mix to set up without freezing. It is also used to accelerate the setting, therefore resulting in obtaining higher strength faster and allowing the roadway to be opened to traffic sooner. However, chlorides cause corrosion of reinforcement, so this material should not be used in heavily reinforced structures or those where corrosion will excessively reduce the life of the pavement. Extra cement and/or alternate non-chloride chemical additives can be used for fast strength gain when needed for reinforced concrete.

6.04.04 (revised 5-28-2013)

Concrete Pavement

A. General

Michigan has constructed three types of concrete pavement in past years. These are: Jointed Reinforced Concrete Pavement (JRCP), Jointed Plain Concrete Pavement (JPCP) and Continuously Reinforced Concrete Pavement (CRCP). JRCP and JPCP have been widely used while CRCP has been used in the past.

B. Thickness

Conventional thicknesses of concrete pavement range from 8” to 12” uniform. Many Metro area freeways were built utilizing 10” thickness and there are many rural trunklines 8” thick.

Some older pavements placed prior to 1950 were constructed with variable thicknesses. For example, a 9”-7”-9” pavement is 9” thick at each outside edge, tapering to 7” thickness 3’ in from the edges. When rehabilitating a concrete pavement of this era, the designer should be aware of this possible design. Pavement cores can confirm or deny this situation if old plans do not exist.

Pavement thicknesses greater than 9” are usually required only on the freeway system. The Pavement Designer will make the thickness determination.

C. Section Deleted

6.04.04 (continued)

Concrete Pavement

2. JPCP Joint Spacing

Plain concrete pavements are designed to virtually eliminate random transverse cracking. Standard joint spacings are based on slab thickness and are shown on Standard Plan R-43-Series.

3. Expansion Joints

Expansion joints are placed on both sides of bridge structures and at-grade railroad crossings as specified on Standard Plan R-43-Series.

4. Contraction Joints

With any reduction in temperature, concrete will be subjected to tensile stress because of the frictional restraint along the plane of the base. Since concrete has negligible tensile strength, especially at an early age, a crack will occur. Therefore, concrete should be saw cut as soon as construction allows. A typical "relief" cut is ⅓ the thickness of the slab. Sawing can commonly be done on the day of paving or early the following day. Early relief cutting is intended to reduce early random cracking of the slab. See Standard Plan R-39-Series.

6.04.04 (continued)

5. Joints Sealants

The Department typically requires hot poured rubber type joint sealing compound in expansion joints and either hot poured rubber or preformed neoprene compression type seals in contraction joints. Cold applied asphaltic sealants are not permitted.

The geometry of the joint reservoir, the sawed groove in which the sealant is placed, is very important. The reservoir must therefore be designed specifically for the joint spacing and type of sealant that will be used. In the past hot poured rubber would retain its adhesion to the sides of the joint groove reasonably well over a long period of time if not required to be extended more than 10% of original width. This would require ¼" of initial width for each 4' of slab length, i.e., a 1" wide joint groove would function for a 16' long slab. It follows that the use of hot poured rubber for transverse contraction joints are not practical for slab lengths more than 16'. In the 1990's, the Department began specifying lower modulus hot poured rubber, which can be extended further while maintaining good adhesion. Because of this, in 2004 the joint widths were reduced to ¼" for slabs less than 16'. Other issues that are improved because of narrower joints are: reduced tire noise, improved ride perception, and decreased spalling. One drawback is that hot poured rubber is somewhat difficult to place on highly superelevated pavements.

Neoprene seals must be in compression at all times, or they will be ineffective and may come out of the joint. In general, neoprene seals are designed to function in a compression range of 20% to 50%, based upon their nominal width. A minimum of 20% compression is required to maintain an adequate seal; compression beyond 50% may cause the seal to extrude above the pavement surface where it may be damaged or lifted out by traffic.

6.04.04 (continued)

Concrete Pavement

F. Longitudinal Joints

Longitudinal joints are used to prevent irregular longitudinal cracks within the slab. Such cracks normally result from the combined effects of load, base weakness and restrained warping under traffic. Rapidly dropping air temperatures during the first night after paving may induce longitudinal cracking due to subgrade frictional restraint. Typically, sawing of longitudinal joints occurs within 24 hours of casting the concrete.

Longitudinal joints should coincide with the location of proposed painted lane lines. When the pavement geometry is such that the location of lane lines are not readily evident, the plans should include a joint layout diagram for the area in question.

See Geometric Design Guide GEO-370-Series for details of longitudinal joint lines at a T-ramp intersection with a crossroad.

See Standard Plan R-41-Series, "Longitudinal Pavement Joints."

1. Joint Spacing

Maximum width of a concrete pavement slab without a longitudinal joint is 16'. A 30' wide concrete service road should have one longitudinal joint at the centerline.

Thinner slabs should have longitudinal joints at closer spacing, e.g., an 8" thick, 16' wide ramp probably should have the longitudinal joint offset 12' from one edge and 4' from the other edge.

2. Lane Ties

Lane ties are used to hold adjacent concrete pavement structures in close relationship to one another. As a general principle, the more lanes that must be tied together, the closer the required spacing of the lane ties. The closest spacing is needed farthest from the free edge. (See the table on Standard Plan R-41-Series.)

6.04.04F(2) (continued)

With form paving, bulkhead joints are created at the edges where the forms are used. Deformed bars are used as lane ties across these joints. With slip-form paving, several techniques have been tried, including inserting a straight bar into the plastic concrete immediately behind the slip-form. Currently, most contractors utilize equipment that inserts a bar bent at 90 degrees such that they do not interfere with the paver tracks. After the concrete has set, the bar is bent perpendicular to the edge of pavement.

3. "L" joints

"L" and "L1" joints are no longer used. The hook bolts used in these joints have been replaced with epoxy anchored lane ties when a future widening is made. The epoxy anchored lane tie is referred to as an "L2" joint and is specified on Standard Plan R-41-Series.

4. External Longitudinal Pavement Joint

Sawing and sealing of longitudinal pavement joints is included in the payment for the concrete pavement. This includes the exterior longitudinal joint between the concrete pavement and a concrete shoulder, concrete curb and gutter, or concrete valley gutter.

The external longitudinal joint between concrete pavement and Detail E (straight) curb, between concrete pavement and concrete dividers, and between HMA surfaced concrete base course and curbings are not required to be sawed and sealed. (The axle protrusion of the saw prohibits sawing a joint adjacent to a vertical face of any appreciable height, and our standards do not provide for either sawing and sealing of joints in base course.)

5. Longitudinal Joint Sealant

Longitudinal concrete pavement joints are generally sealed with hot poured rubber.

6.04.07 (revised 5-28-2013)

Plain Concrete Pavement

A. Guideline for Use of Plain Pavement

By Department practice, concrete pavements are nonreinforced except at bridge approach slabs and as specifically recommended for isolated special situations.

B. Joint Type and Spacing

Concrete pavement, if not reinforced, will normally crack transversely at 12' to 16' intervals. Hence, transverse joints must be within this spacing range if mid-slab cracking is to be avoided. The Department uses 14' to 16' joint spacing based on pavement thickness.

Skewed joints can be used on service roads when it is the standard used by the local agency for the same class of road or street. The rationale behind skewed joints, which may be combined with randomized spacing, is that rhythmic or resonant responses in vehicles are damped. Skewing also minimizes the effect of any roughness of the joints and improves the riding quality of a pavement if the slabs have curled or if faulting is present. There is some evidence that skewing reduces faulting of plain pavements.

Skewing is generally 2' for a 12' width, 3' for a 16' width, and 4' for a 24' width. The direction of the skew should be as shown below:

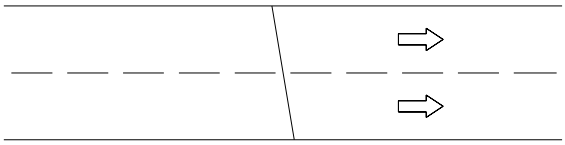

6.04.07B (continued)

(Studies have shown potential for a little less pumping when the skew angle is as shown, rather than the other way.)

When random spacing is employed in conjunction with skewed joints, use the sequence of 12' – 13' – 16' – 15' Random spacing is of little benefit on slow-speed roadways, such as rest area ramps.

With reference to Standard Plans R-39-Series and R-41-Series, the following joints should be used in nonreinforced pavement:

1. Service Roads - Use transverse plane of weakness joint, symbol W, skewed 2' per 11' or 12' lane*, spaced at 16'. Use lane ties as shown for longitudinal joints, symbol B or D.

2. Concrete Base Course Widening - Use transverse plane of weakness joint, symbol U, spaced at 16', not skewed. (See Standard Plan R-42-Series.) Use lane ties as specified for longitudinal joints, symbol B or D.

3. Urban Streets - Use transverse plane of weakness joint, symbol W, skewed 2' per 11' or 12' lane*, spaced at 16' maximum. Use lane ties as specified for longitudinal joints, symbol B or D.

* Skewing of transverse joints may be omitted if cross streets are closely spaced requiring expansion joints at 90° at the spring lines.

6.04.07

Plain Concrete Pavement

C. Temporary Concrete Pavement

Plain concrete pavement for a temporary road, should have transverse joints at a 16' spacing (symbol W, Standard Plan R-39-Series, except that final width shall be ⅛"), unsealed and not skewed. The longitudinal joint may be omitted. If the pavement will lay over a winter or longer, a longitudinal joint (⅛" relief cut one third the pavement thickness specified for symbol D on Standard Plan R-41-Series, except that final width shall be ⅛"), unsealed, should be used. Lane ties should also be provided. If a longitudinal joint and lane ties are desired in temporary concrete pavement, they must be called for in the plans or proposal.

In the event that the "temporary" road will be in service for 4 or 5 years, sealing of joints, mesh reinforcement, load transfer, etc., should be considered on a case-by-case basis.

6.04.08 (revised 5-28-2013)

Concrete Base Course

A. Criteria for Use

By definition, concrete base course is intended for imminent HMA surfacing. Its use is generally dictated by a desire to maintain the same pavement coloring in a widening as on the original pavement or to differentiate between lanes. For many years expressway ramps and speed change lanes in Detroit were uniformly paved with concrete base course and HMA to make them readily distinguishable to motorists by their contrast with the concrete pavement of the through lanes. This policy is no longer in effect.

6.04.08A (continued)

A decline in the use of concrete base course in recent years is attributable to the realization that HMA surfacing is not waterproof. Depending on the HMA mixture, a certain amount of moisture can usually be expected to reach the interface between the asphalt and the concrete. In winter this may be salt brine that contributes to deterioration of the concrete and loosening of the HMA surfacing. Reflective cracks also form in the overlay directly above the joints, allowing penetration of water and incompressible materials.

By current practice, concrete base course is limited to widening of existing pavements and patching, and not for full-width new construction. Preferably, it should be further limited to widenings of less than a lane width. For example, a 30' asphalt-surfaced pavement being widened to five 12' lanes (60') should probably have a 3' base course widening and a 12' (perhaps monolithic) lane of concrete pavement on each side. (Full-depth HMA construction is an alternative.)

See Section 6.04.09, "Concrete Widening".

B. Reinforcement

Concrete base course will not contain mesh reinforcement unless it has been specifically recommended for the project.

C. Texture and Joints

(See Standard Plan R-39-Series.) Texturing of concrete base course consists of a longitudinal burlap drag. This roughness, combined with a clean, non-oily surface, enables a single-course HMA surface to bond to concrete base course in contrast to a requirement for a two-course HMA resurfacing over an older concrete pavement previously polished by traffic.

Joints in concrete base course are not sealed.

MICHIGAN DESIGN MANUAL
ROAD DESIGN

CHAPTER 14

INDEX

PROCEDURES FOR PLAN PREPARATION

14.01 GENERAL

14.02 DESIGN PACKAGE EVALUATIONS

14.02.01 Scope Verification

14.02.02 Final Right-of-Way

14.02.03 THE Plan Review

14.02.04 Omissions/Errors/Check (OEC) Meeting

14.02.05 Pre-Construction Meeting

14.02.06 Post-Construction Meeting

14.03 ESTIMATES

14.03.01 Definitions

14.03.02 Program Estimates

14.03.03 Preliminary Estimates

14.03.04 Engineer's Estimate

14.04 Section Deleted

14.05 PROJECT STUDY TEAM

14.06 PROJECT ASSIGNMENT

14.07 PROJECT NUMBERS

14.07.01 Work Type Codes and Descriptions

14.08 ACTIVATION OF "C" PHASE

14.09 MDOT OVERSIGHT / FHWA OVERSIGHT

CHAPTER 14 PROCEDURES FOR PLAN PREPARATION INDEX (continued)

14.62 CONTRACTOR INQUIRIES

14.63 ADDENDA

14.64 POSTPONEMENT, WITHDRAWAL OR REJECTION OF PROJECTS FROM LETTING

14.65 REFERENCE INFORMATION DOCUMENTS

14.66 TABULATIONS OF BIDS

14.67 PRE-CONSTRUCTION MEETING

14.68 Section Deleted

14.69 ARCHIVING PROJECT FILES (WORKSTATION FILES)

14.70 DESIGN PROJECT RECORD

14.71 PLAN REVISIONS

14.71.01 Procedure

14.72 POST-CONSTRUCTION MEETING

14.72.01 Recommendations and Authorizations

14.73 MARKED FINAL PLANS

14.73.01 Mark-Up Standards

14.73.02 File Standards and Requirements

14.73.03 As Built Turn in Process

14.73.04 Design Division Review and Approval Process

14.74 DOCUMENT RETENTION

14.74.01 Permanent Records

APPENDIX B – CRITICAL PATH CONSTRUCTION TIME ESTIMATES

APPENDIX C – FUNDING CODES

APPENDIX D – LIST OF ACRONYMS

14.02.02 (revised 3-26-2012)

Final Right-of-Way

Final ROW Review Submittal Review

Quality Assurance
Development Services Division – Project Development Services
Region/TSC Real Estate Agent

14.02.03 (revised 3-26-2012)

THE Plan Review

Design/Construction Package Evaluation

Quality Assurance
Resident /Delivery Engineer
Project Initiator
Region/TSC System Manager
FHWA Oversight - Optional

14.02.04 (revised 3-26-2012)

Omission/Errors/Check (OEC) Meeting

Design/Construction Package Evaluation

Quality Assurance

14.02.05 (revised 3-26-2012)

Pre Construction Meeting

Design/Construction Package Evaluation

Low Bidder
Resident/Delivery Engineer

14.02.06 (revised 3-26-2012)

Post Construction Meeting

Design/Construction Package Evaluation

Design Unit Leader/Consultant Coordinator
Resident/Delivery Engineer
Prime Contractor
Sub Contractors

14.03 (revised 5-28-2013)

ESTIMATES

14.03.01

Definitions

Program Estimates - Cost estimates made prior to the assignment of a project for preliminary and final design.

Preliminary Cost Estimates - Cost estimates made at any time during plan development but prior to plan completion.

Engineers Estimate - Cost estimate based on final quantities reviewed by the Specifications and Estimates Unit of the Design Division.

Pay Item - The name used to describe an item of work for a project.

Unit Price - The price estimated as the cost to complete one unit of a pay item.

Pay Item Number - A standard pay item number assigned to a pay item for use in TrnsPort PES and other automated systems.

Method of Measurement - The method used to measure material or work used on a project. Measurement can be by unit, lump sum, or at times included in the measurement for other items.

14.03.01 (continued)

Definitions

TrnsPort (PES/LAS/CAS) - TrnsPort is an AASHTO software system used for managing transportation programs and is a series of computer program modules. It is used to record and analyze data from the design, estimating, letting, award, and construction processes. MDOT has adopted the following four modules at this time.

a. **Proposal and Estimating System (PES) -** Is used by Design to enter the initial project information (pay items and quantities) and produce an estimate of the construction cost using Average Unit Prices (AUP).

b. **Letting and Award System (LAS) -** Is used by the Contract Services Division to produce documentation and information used in advertising, letting, and awarding the contract.

c. **Construction and Administration System (CAS) -** Is used by construction and utilizes Field Manager to track pay items and quantities in construction.

d. **Decision and Support System (DSS) -** Is used by the Specifications and Estimates Unit to analyze bid data and to determine average unit prices (bid-based prices) when generating detailed cost estimates.

14.03.02

Program Estimates

Program estimates are usually made by Region/TSC personnel during the "Call-For-Projects" stage. These early estimates are broken down by major work items, such as; grading, pavement and shoulders, safety items, utilities, drainage, and so forth. Program estimates should be as complete and accurate as possible using such data as type of project, length, historical data, special features, etc. The program estimate is used by the Bureau of Transportation Planning to budget money for the project.

TrnsPort PES is available for use by Region System Managers and Region/TSC Design Engineers when preparing cost estimates. These program estimates are sent to Lansing with the Call-For-Projects submittals. When preparing these program estimates, only major pay item quantities would be estimated and inserted into the program under the proper code number. The resulting construction cost could then be adjusted to include miscellaneous unnamed pay items and for inflation. Use of TrnsPort would ensure that uniform and current unit prices would be used by all Region/TSCs for program cost estimates.

Program estimates should be reviewed by the Design Unit upon project assignment and during scope verification. This review should determine any obvious errors or omissions and/or if the estimate is reasonable. If the estimate is not reasonable, the Region/TSC or the author of the scope needs to obtain an approved cost increase or decrease, or re-scope the project. This needs to be completed before beginning the design.

14.03.03

Preliminary Estimates

Preliminary estimates are made periodically throughout the design of the project to update the estimated cost. Design revisions, changes in scope, and changes in project limits all can contribute to increases or decreases in the cost of the project. Changes in cost should be reviewed with the Region System Manager. If the change is sizable, a request to increase or decrease the programmed amount should be sent to the Bureau of Transportation Planning. Increases should be requested as early as possible to avoid a project delay.

14.03.04

Engineer's Estimate

The Engineer's Estimate is the final cost estimate prepared by design before letting. The estimator uses the final quantities, plans and proposal material to estimate the unit prices and project costs. This is the official estimate used by the department to determine if the low bid is reasonable.

14.04

Section deleted.

14.05

PROJECT STUDY TEAM

A Project Study Team is normally formed for all New Routes/Increased Capacity projects and comprises representatives of a number of divisions from various bureaus within MDOT, as well as the FHWA. The purpose of the team is to develop improvement alternatives for evaluation based on environmental, social, community and regional planning, engineering, traffic operations, safety, construction and right of way cost criteria. The goal of the Study Team is to reach a consensus, based on the evaluation of alternatives, on a recommended course of action for MDOT management approval. The recommendation must be consistent with MDOT strategies and goals.

The Study Team Chairperson is the Project Manager who is responsible for assembling the Project Study Team and who is usually from the Project Development Section of the Design Division. The Road Design Representative on the Study Team will normally be a Design Engineer-Road. The assignment is made similar to that described in Section 14.06 (Project Assignment) of this chapter.

The Road Design Representative is assigned to a Project Study Team to provide practical design information during the Early Preliminary Engineering phase (EPE) when alternatives are developed and analyzed. The Road Design Representative on the Study Team will review all proposed alternatives and recommendations based on criteria of Design Standards and Guides, professional judgement, and construction procedures, and provide studies and cost estimates as may be required. As a Project Study Team member, the Road Design Representative fills an important role in the consensus building process. Such involvement and knowledge of a project's development during the EPE phase can be an invaluable tool since often the Design Engineer-Road is assigned the project once the Preliminary Engineering phase (PE) is initiated.

14.10 (continued)

SCOPE VERIFICATION MEETING

NOTE: At this stage, the Project Manager should check to see if the project is required to be on the STIP (Statewide Transportation Improvement Plan). This may be done by accessing: MPINS

Job Locator
Job (type in job number)
Road/Bridge Info
[I]

If the ***STIP Req.*** indicates yes, the project is required to be on the STIP. If the ***STIP Ind.*** has 9800 or 9901,etc. The project has been placed on the 3 year STIP indicated. If the ***STIP Ind.*** is blank, but the ***STIP Proposed*** indicates yes, the project has been proposed for placement on the latest STIP. Project Managers needing clarification concerning the status of the STIP should contact Statewide Planning Section of the Statewide Transportation Planning Division in the Bureau of Transportation Planning.

14.11 (revised 5-28-2013)

DESIGN EXCEPTIONS

After the scope verification meeting is held and the project scope has been agreed upon, the Project Manager should identify any Design Exceptions to MDOT standards that will be utilized in the design of the project. Exceptions to MDOT design standards should be identified, and, ideally, completed during the scoping process. However, if this has not been done, a Design Exception Request (Form FC26) should be completed. The Project Manager should consult with the Geometrics Unit of the Design Division when identifying and developing justification for design exceptions. Previously completed Design Exceptions should also be reviewed for accuracy and revised at this time.

For projects with “MDOT Oversight” (formerly known as exempt projects), the completed Design Exception Request (Form FC26) must be approved and signed by the Engineer of Design Programs. For projects with “FHWA Oversight” (formerly known as non-exempt projects), the completed Design Exception Request (Form FC26) must be approved and signed by the Engineer of Design Programs and subsequently approved by the FHWA Area Engineer. The Design Exception Request (Form FC26) and instructions (Form FC26Instructions) for completing the form are available on the MDOT website. A signed copy of the Design Exception Request (Form FC26) should be placed in the project file.

For additional information see Sections 3.09.02C, 3.10.03, 3.11.02D and 3.11.03B.

14.24 (revised 3-26-2012)

REQUEST FOR CRASH ANALYSIS AND SAFETY REVIEW
(PPMS Task Description 3560)

All projects, except non-hot mix asphalt overlay Capital Preventive Maintenance projects, should have a crash analysis and safety review by the Safety Programs Unit in the Design Division. The request for analysis is done by submitting Crash Analysis and Safety Review form. The review may have already been completed as part of the Region/TSC's Call-for-Projects process, in which case an additional review may not be necessary. However, reviews older than two years should be updated by requesting another review. The review will identify any unusual occurrences or above average frequency crashes and will advise the Design Unit of any recommended measures to alleviate the situation. The Project Manager should review the plans to verify these measures have indeed been incorporated into the plans prior to the OEC Meeting.

14.25 (revised 5-28-2013)

REQUEST FOR SPECIAL SOILS INVESTIGATIONS AND / OR DESIGNS
(PPMS Task Description 3510)

Although the Region/TSC Soils and Materials Engineer is responsible for supplying soil borings, pavement cores and limits and quantities for removal of unstable materials (peat, muck, etc.), to the Design Unit, other types of soil analysis may also be necessary. Any soil information, analysis and design regarding the following should be requested from the Geotechnical Services Unit of the Construction Field Services Division.

- Sewers and culverts greater than 5'-0"
- Box culverts greater than 4'-0" x 4'-0"
- Retaining walls
- Sound walls (except Metro Region)
- Light Towers (except Metro Region)
- Mechanically stabilized earth walls
- Reinforced soil slopes

In order to request any of the above, the Project Manager should send a memo and 2 sets of plans with the following minimum information:

- Plan of site (location map)
- Alignment with stationing
- Benchmarks as close to the location as possible
- A detailed description of the requested information
- Plan completion date and a date when the information is needed.
- Proposed method of controlling water (during culvert construction)-diversion channel, temporary dam, pump across road, etc.

14.62 (revised 5-28-2013)

CONTRACTOR INQUIRIES

During the advertising period, Contractors may contact the Department for clarification of plan/proposal material. Each proposal has a Notice to Bidders that includes the name of a contact person and their contact information. All Contractor inquiries are to be directed to the contact person by e-mail. This is to insure that all Contractors are given the same information (answers) and, therefore, an equal opportunity to bid the project. The designated contact person is usually the Project Manager. The e-Proposal web site displays a link to the Project Manager listed in MPINS (pulled from the MAP database) as the contact person for the project. The contact person is also listed in a "Notice to Bidders" in the proposal.

The contact person will evaluate each inquiry and determine if it will have a significant impact on the bids and if an addendum is required. These inquiries may identify errors or oversights in the bidding document. If an addendum is required, the contact person will submit the necessary information to the Specifications and Estimates Unit for review and distribution. The following information is intended to give some direction in dealing with Contractor Inquiries.

For each Contractor inquiry the contact person must complete a Notice to Bidders Inquiry Response in the Notice to Bidders Inquiry System (NTB Inquiry) on the e-Proposal web site detailing the nature of the inquiry and the action taken, if any. Questions will be posted anonymously and a direct response will be e-mailed to the inquirer.

The contact person may have to go to several sources to get an answer. If the answer is only a clarification of proposal or plan material that will not give the Contractor an unfair advantage in bidding the project, the contact person can simply provide the answer.

14.62 (continued)

If the answer will give the Contractor an unfair advantage in bidding the project, the item is reviewed with the Supervisor of the Specifications and Estimates Unit to determine if an addendum should be issued.

If an addendum is required, the contact person must take the necessary steps to ensure one is issued and informs the Contractor of the action taken.

If it is too late to issue an addendum, the contact person informs the Contractor to bid the item to the best of their ability or to bid the item as proposed. If the error or omission is significant enough, the project may have to be postponed or withdrawn from letting. See Section 14.64.

Although all inquiries are supposed to be made a minimum of one week prior to the letting date (as stated in the proposal), they can still occur during the last week. Occasionally, these require a late addendum. The decision to require a late addendum should be discussed with the Supervisor of the Specifications and Estimates Unit. Late addenda must be approved by the Quality Assurance and Lettings Engineer prior to publishing.

Addenda are sent to prime Contractors only. If a Subcontractor makes an inquiry that results in an addendum, the addendum is sent only to the prime Contractor. MDOT is not responsible for notifying Subcontractors or suppliers.

Contractors may ask for additional information not contained in the plans such as exact locations of miscellaneous quantities on the note sheet or approval to substitute materials. These are examples of information the contact person should not provide. Answers should be concise and only clarify, not expand the content of the plan/proposal material.

14.63 (revised 5-28-2013)

ADDENDA

Changes to the contract (plans, specifications and special provisions) are sometimes necessary when they affect the way a Contractor bids a project. Notification to Contractors is sent out by the Contract Services Division in the form of an addendum (an amendment to the contract documents as advertised). Changes most often originate by Contractor Inquiry. Addenda are issued at the request of the Project Manager, after a project is advertised but before the opening of the bids Once the plans and proposal have been sent to the Contract Services Division, for advertising, the plan/proposal package cannot be changed except by addendum..

The Project Manager should determine if changes are necessary by determining the effect on the way the work will be bid. The Project Manager should consult with the Supervisor of the Specifications and Estimates Unit to determine the effects. If there is no effect on the bidding, an addendum may not be necessary. This type of change can be handled by a plan revision after the project is let.

If an addendum is needed, it is initiated by supplying the required information to the Specifications and Estimates Unit. Detailed instructions and templates for submitting an addendum request can be found in ProjectWise or on the Plan Development website.

14.63 (continued)

Typically there are three types of changes made to the Contract Documents by an addendum. Pay item, proposal, and plan changes require the following information:

1. If Pay Items are Affected:

The proposal line number, pay item number, pay item description, and quantity and units as specified in the Schedule of Items in the Proposal.

2. If the Proposal is Affected:

The proposal page number of the document affected along with the change in the document if not supplying a new document.

3. If Plan Sheets are Affected:

The sheet numbers that need to be altered, the exact description of the change and any additional sheets as necessary.

The FHWA must give prior approval for all addenda involving FHWA oversight projects before they can be published. The Project Manager is responsible for obtaining FHWA approval. E-mail approval from the FHWA Area Engineer is sufficient documentation.

Addenda issued no later than four days prior to letting require the approval of the Specifications and Estimates Supervisor. Addenda issued after this date must also be approved by the Quality Assurance and Lettings Engineer. All approvals are facilitated by the Specifications and Estimates Unit.

Project Managers should make every attempt to minimize the number of addenda requests, especially those within the final five days prior to the letting date. Addenda must NOT be used as a process for completing the design of a project after advertisement.

14.64 (revised 5-28-2013)

POSTPONEMENT, WITHDRAWAL, OR REJECTIONS FROM LETTING

The Project Manager will be notified by the Specifications and Estimates Supervisor of any project that requires the following action:

1. Postponement from Letting

Is usually a delay to the next available letting. The Contractor retains the plans and proposal and an addendum will be issued.

The Project Manager will make the required changes and submit an addendum request to the Specifications and Estimates Unit.

2. Withdrawal from Letting

Is usually a delay of more than one letting. The Contractor will dispose of the existing plans and proposal documents. The plans and proposal will be modified by the Project Manager and turned back in to Specifications and Estimates for re-advertising.

Original plans and proposal material will be returned to the Project Manager by the Specifications and Estimates Unit

3. Rejection from Letting

Takes place after letting and Executive Bid Review. If rejected, the original plans and proposal will be returned to the Project Manager by the Specifications and Estimates Unit.

A copy of the memo signed by the Director of the Bureau of Highway Development will be sent to the Director of the Bureau of Finance and Administration for appropriate action.

The Project Manager has the responsibility to pursue whatever contract changes are necessary and turn the project back in to Specifications and Estimates for re-advertising.

14.64 (continued)

4. Bid Rejections Less Than 10% Over the Engineer's Estimate

a) The Project Manager contacts the Specifications and Estimates Unit with concerns that the bids received are not reflective of previous projects with similar scope and type of work or that the project cannot be built as advertised.

b) The Specifications and Estimates Unit and the Project Manager review the proposal package to document why the bids are not acceptable. The Project Manager, in cooperation with the Region Engineer, recommends that bids be rejected to the Director of the Bureau of Highway Development.

c) If the decision is made to reject all bids, a memo is sent to the Director of the Bureau of Finance and Administration from the Director of the Bureau of Highway Development requesting rejection of all bids with an explanation why the bids should be rejected.

14.64 (continued)

POSTPONEMENT, WITHDRAWAL, OR REJECTIONS FROM LETTING

5. Bid Rejections More Than 10% Over the Engineer's Estimate

a) Design Division's Specifications and Estimates Unit reviews the bid tabulation with the Project Manager to determine what items caused the bid amounts to exceed the engineer's estimate.

b) The Specifications and Estimates Unit and the Project Manager reviews the proposal package to see if the bid amount is reasonable. The Project Manager, in cooperation with the Region Engineer, recommends that bids be rejected or accepted to the Director of the Bureau of Highway Development.

c) If bids are rejected, a memo is sent to the Bureau of Finance and Administration from the Director of the Bureau of Highway Development requesting rejection of all bids.

d) If bids are accepted, a "Justification Memo" is sent to the Bureau of Finance and Administration from the Director of the Bureau of Highway Development with reasons why the bids should be considered reasonable and be awarded to the low bidder.

e) If the low bid is $500,000 or greater, the justification memo is placed on the next State Transportation Commission agenda for approval, before it is submitted to the State Administrative Board agenda for approval.

14.64 (continued)

6. Single Bid Rejection less than 10% over the Engineer's Estimate

a) If the single bid is not acceptable, the Project Manager contacts the Design Division's Specifications and Estimates Supervisor with concerns that the low bid received is not reflective of previous projects with similar scope and type of work or that the project cannot be built as advertised.

b) The Specifications and Estimates Supervisor and the Project Manager review the proposal package to document why the single bid is not acceptable. The Project Manager, in cooperation with the Region Engineer, recommends the bid be rejected to the Director of the Bureau of Highway Development.

c) If the decision is made to reject the bid, a memo is sent to the Director of the Bureau of Finance and Administration from the Director of the Bureau of Highway Development requesting rejection of the bid with an explanation why the single bid should be rejected.

d) If the single bid is deemed acceptable, the Bureau of Finance and Administration will process the bid in the normal manner. This includes the extra step of reporting the single bid contract to the State Transportation Commission agenda for approval.

14.65 (revised 5-28-2013)

REFERENCE INFORMATION DOCUMENTS

Any survey information and cross-sections developed during the plan development process should be included in the Reference Information Documents folder in ProjectWise. These are non-contractual, reference information only, files published for the Contractors prior to bidding on the project. This is a courtesy to the Contractors and can also assist the Delivery Engineer by showing substantially more detail than the typical cross-sections included in the plans. This should be done prior to turning the project in to Specifications and Estimates for advertising. The sections may include existing grades, depth of subbase, aggregate base, proposed surfacing material, existing and proposed side slopes (embankment), plan grade elevations and some type of vertical and horizontal scale reference.

14.66 (revised 5-28-2013)

TABULATIONS OF BIDS

Approximately one week after the letting, bid tabulations with the Engineer's Estimate, the low bid Contractor and the other prime Contractor's bids are posted to the MDOT website. Some projects require an additional review and may take longer. The Tabulation of Bids can also be accessed through the Bid Letting System on the Plan Development website by selecting the appropriate letting date and letting item number.

CHAPTER 2 - STEPS IN PRODUCING PLANS INDEX (continued)

2.02.15 Scope Verification Meeting (11-19-99)

2.02.16 THE Plan Review (11-19-99) (10-22-2012)

2.02.17 Region/TSC Maintaining Traffic Recommendations

2.02.18 Final Constructability Review (10-22-2012)

2.02.19 Omissions Errors / Check (OEC) Meeting (11-19-99) (10-22-2012)

2.02.20 Rehabilitation Project Scoping (11-19-99) (10-22-2012)

2.03 PLAN PREPARATION STEPS

2.03.01 FHWA Oversight / MDOT Oversight (12-5-2005)

2.03.02 Study

2.03.03 Preliminary Plans

2.03.04 Final Plans

2.03.05 Changes During Plan Preparation

2.03.06 Changes After Plan Completion

2.04 PLAN PRODUCTION PROCEDURE

2.04.01 Unit Assignment

2.04.02 Plan Distribution

2.04.03 Estimating Man-Hours

2.04.04 Project History

2.04.05 Project Contact Person

Appendix 2.02.04 Survey/Mapping Action Request (8-20-2009)(5-28-2013)

2.02

DATA SOURCES

Prior to preparation of Contract plans, the Design Engineer shall request data from various sources to assist in the development of a set of contract drawings. Sources to be used are listed in the following paragraphs.

2.02.01

Engineering Reports

If an Engineering Report has been prepared and published by MDOT, it will provide the Design Engineer with general information regarding the location of the project and the proposed horizontal and vertical alignment. It may also include miscellaneous design constraints such as traffic control, architectural treatment, Michigan Department of Natural Resources (MDNR) and Michigan Department of Environmental Quality (MDEQ) permit and mitigation consideration, etc. It is essential that the design parameters established in the Engineering Report be closely followed in the preparation of the plans. (10-22-2012)

2.02.02

Environmental Impact Statement, Environmental Assessment or Categorical Exclusion

All three documents will provide the Engineer with valuable information regarding the project. For definitions see Section 14.12 and 14.13. If an Environmental Impact Statement has been issued, the restrictions listed in the document must be closely observed during preparation of the plans. (11-19-99)

2.02.03

Road Design

Road Design Plans will provide proposed alignments and grades in detail, and will provide cross-sections of the approaches.

2.02.04

Survey Data

The Design Engineer must determine whether sufficient survey data has been provided from other sources. If not, additional survey data such as a pickup survey must be requested from the Survey Section.

Normally, surveys should be ordered for all major reconstruction jobs, such as bridge widening. On stream or river crossings, survey requests should be combined with those from the Hydraulics/Hydrology Unit to avoid duplication of effort by the Surveys Section. The Survey/Mapping Action Request, (Form 0226), is available from MDOT web site or Appendix 2.02.04. (8-20-2009)(10-22-2012) (5-28-2013)

2.02.05

Geotechnical Data

The Design Engineer must request data from the Geotechnical Services Section of the Construction Field Services Division to determine soil conditions and nominal bearing resistance to be used in the design of the foundations. They will also indicate whether piles are required, and if so, the type, section, estimated length and minimum penetration and determine the effect of scour on the stability of the structure. For additional information, refer to Section 3.01.

For rehabilitation projects that may result in load increases on foundations, the Design Engineer shall perform a foundation analysis and consult with the Geotechnical Services Section. A copy of the analysis shall be kept in the project design folder. (11-19-99) (10-22-2012)

2.02.19

Omissions / Errors Check (OEC) Meeting

The review for final plans and proposal is completed through an Omissions / Errors Check (OEC) meeting. The information gathered at the meeting is also valuable in completing the project. For more information regarding OEC meetings see Section 3.03.02. (11-19-99)

2.02.20

Rehabilitation Project Scoping (11-19-99)

Project Scoping Documents will be provided for all bridge rehabilitation projects and submitted to the Bridge Systems Manager. The document package will contain different items depending on if the scoping work is done by consultants or MDOT.

A. Scoping by MDOT

The following will be provided if the scoping work is done by MDOT:

1. Program Revision Request (within MPINS) (5-28-2013)
2. Project Concept Statement (from MPINS)
3. Bridge Repair Cost Estimate Worksheet and Worksheet Key (8-20-2009) (5-28-2013)
4. Latest Bridge Inspection Report
5. Project Photo Log

Additional information will be provided if available, such as:

6. Detailed Inspection Report
7. Underclearance waiver information
8. Diver Inspection Report
9. Load Posting Form
10. Delamination Survey (10-22-2012)
11. Other pertinent information which will assist in the design

2.02.20 (continued)

B. Scoping by Consultant

In addition to the above, the following will be provided if the scoping work is done by consultant:

1. Field Inspection Findings, describing all site issues
2. Recommended repair alternative
3. At least three rehabilitation options with cost estimates
4. Life Cycle Cost Analysis

The proponent Region has the responsibility for entering the project in MPINS (internal information system) and for submitting the Project Scoping Document Package to the Bridge Systems Manager. The project must also have the approval of the Regional Systems Manager.

7.01.08

Vertical Clearance

A. Requirements

The desired vertical bridge underclearances should be provided as indicated below. If the desired underclearances cannot be provided, then the minimum underclearances shall be met. Where it is considered not feasible to meet these minimums, a design exception shall be requested from the Engineer of Design Programs and subsequently to the FHWA Area Engineer on "FHWA Oversight" (non exempt) projects and from MDOT Engineer of Design Operations - Structures Section on "MDOT Oversight" (exempt) projects (see Section 12.03 also). See the vertical clearance design exception matrix in Appendix 12.02.01. Requests to further reduce the underclearance of structures with existing vertical clearance less than indicated in the chart below should be made only in exceptional cases. (12-5-2005)(1-14-2013)

VERTICAL CLEARANCE REQUIREMENT TABLE (8-20-2009)

Route Classification Under the Structure	All Construction	New Construction	Road 4R Construction	Bridge 4R Construction	3R Construction
	Desired	Min	Min	Min	Min
Freeways	16'-3"	16'-0" *	16'-0" *	16'-0" *	16'-0" *
NHS Arterials (Local & Trunkline)	16'-3"	16'-0" *	Maintain Existing 14'-6" Min*	16'-0" *	14'-0" *
Non NHS Arterials (Local & Trunkline)	16'-3"	14'-6" *	Maintain Existing 14'-6" Min*	Maintain Existing 14'-6" Min*	14'-0" *
Collectors, Local Roads & Special Routes(1)	14'-9"	14'-6" *	Maintain Existing 14'-6" Min*	Maintain Existing 14'-6" Min*	14'-0" *

3R = Rehabilitation, Restoration, Resurfacing **4R = Reconstruction**

* Minimum Vertical Clearance must be maintained over complete usable shoulder width.

Information on the NHS systems can be obtained by contacting the Statewide Planning Section, Bureau of Transportation Planning or found on the MDOT website at: http://www.michigan.gov/mdot-nfc (11-28-2011)

(1) Special Routes are in Highly Urbanized Areas (where little if any undeveloped land exists adjacent to the roadway) where an alternate route of 16'-0" is available or has been designated. Bridges located over Special Routes in Highly Urbanized Areas can be found on the MDOT website at: http://mdotcf.state.mi.us/public/design/files/englishbridgemanual/Exempt_Structures.pdf. (5-28-2013)

Ramps and roadways connecting a Special Route and a 16'-0" route require a vertical clearance minimum of 14'-6" (14'-9" desired). Ramps and roadways connecting two 16'-0" routes require a vertical clearance minimum of 16'-0" (16'-3" desired). (8-20-2009)

Pedestrian bridges are to provide 1'-0" more underclearance than that required for a vehicular bridge. For Freeways (Interstate and non Interstate), including Special Route Freeways, the desired underclearance shall be 17'-3" (minimum 17'-0"). (8-20-2009)

A vertical underclearance of 23'-0" is required for highway grade separations over railroads when constructing a new bridge or removing the existing superstructure. For preventative maintenance, rehabilitation and deck replacement projects the existing railroad vertical underclearance does not need to be increased unless requested by the Railroad. (11-28-2011)

Clearance signs are to be present for structures with underclearance of 16'-0" or less (show dimensions 2" less than actual). See http://mdotwas1.mdot.state.mi.us/public/tands/plans.cfm for additional information and guidelines. (8-20-2009) (11-28-2011)

7.01.08 (continued)

Vertical Clearance

A. Requirements

For shared use paths (pedestrian and bicycle), the vertical clearance to obstructions, including overhead fencing, shall be a minimum of 8'-6" (10'-0" desired). However, vertical clearance may need to be greater to permit passage of maintenance and emergency vehicles. In undercrossings and tunnels, 10'-0" is desirable for vertical clearance. See AASHTO's Guide for the Development of Bicycle Facilities. (9-2-2003)

B. Interstate Vertical Clearance Exception Coordination (8-20-2009)

In addition to normal processing of design exceptions, all proposed design exceptions pertaining to vertical clearance on Interstate routes including shoulders, and all ramps and collector distributor roadways of Interstate to Interstate interchanges will be coordinated with the Surface Deployment and Distribution Command Transportation Engineering Agency (SDDCTEA). The only Interstate routes the SDDCTEA is interested in are the routes that require a 16'-0" vertical clearance. These routes include all the Interstate system including US -131 between I-196 and I-96 (this roadway is technically I-296 but not signed as such). This requirement does not apply to Special Routes (1). (12-5-2005)

MDOT (or its Consultant) is responsible for coordinating exceptions on all projects regardless of oversight responsibilities. MDOT will send a copy of all requests, and responses, to the FHWA. Michigan Interstate Vertical Clearance Exception Coordination, MDOT Form 0333, is available from MDOT web site.

Requests for coordination shall be emailed or sent to:
Jason W. Cowin, P.E.
Senior Engineer, Highway Systems
Highways for National Defense
ATTN: SDDCTEA
709 Ward Drive, Building 1990
Scott AFB, IL 62225
Telephone: 618-220-5229, Fax: 618-220-5125
Email: jason.cowin@us.army.mil

MDOT (or its Consultant) shall verify SDDCTEA receipt of the request. If no comments are received within ten working days, it may be assumed that the SDDCTEA does not have any concerns with the proposed design exception.

7.01.08

Vertical Clearance

A. Requirements

The desired vertical bridge underclearances should be provided as indicated below. If the desired underclearances cannot be provided, then the minimum underclearances shall be met. Where it is considered not feasible to meet these minimums, a design exception shall be requested from the Engineer of Design Programs and subsequently to the FHWA Area Engineer on "FHWA Oversight" (non exempt) projects and from MDOT Engineer of Design Operations - Structures Section on "MDOT Oversight" (exempt) projects (see Section 12.03 also). See the vertical clearance design exception matrix in Appendix 12.02.01. Requests to further reduce the underclearance of structures with existing vertical clearance less than indicated in the chart below should be made only in exceptional cases. (12-5-2005)(1-14-2013)

VERTICAL CLEARANCE REQUIREMENT TABLE (11-28-2011)

Route Classification Under the Structure	All Construction	New Construction	Road 4R Construction	Bridge 4R Construction	3R Construction
	Desired	Min	Min	Min	Min
Freeways	16'-3"	16'-0" *	16'-0" *	16'-0" *	16'-0" *
NHS Arterials (Local & Trunkline)	16'-3"	16'-0" *	Maintain Existing 14'-6" Min*	16'-0" *	14'-0" *
Non NHS Arterials (Local & Trunkline)	16'-3"	14'-6" *	Maintain Existing 14'-6" Min*	Maintain Existing 14'-6" Min*	14'-0" *
Collectors, Local Roads & Special Routes(1)	14'-9"	14'-6" *	Maintain Existing 14'-6" Min*	Maintain Existing 14'-6" Min*	14'-0" *

3R = Rehabilitation, Restoration, Resurfacing **4R = Reconstruction**

* Minimum Vertical Clearance must be maintained over complete usable shoulder width.

Information on the NHS systems can be obtained by contacting the Statewide Planning Section, Bureau of Transportation Planning or found on the MDOT website at: http://www.michigan.gov/mdot-nfc (11-28-2011)

1) Special Routes are in Highly Urbanized Areas (where little if any undeveloped land exists adjacent to the roadway) where an alternate route of 16'-0" is available or has been designated. Bridges located over Special Routes in Highly Urbanized Areas can be found on the MDOT website at: http://mdotcf.state.mi.us/public/design/files/englishbridgemanual/Exempt_Structures.pdf (5-28-2013)

Ramps and roadways connecting a Special Route and a 16'-0" route require a vertical clearance minimum of 14'-6" (14'-9" desired). Ramps and roadways connecting two 16'-0" routes require a vertical clearance minimum of 16'-0" (16'-3" desired). (11-28-2011)

Pedestrian bridges are to provide 1'-0" more underclearance than that required for a vehicular bridge. For Freeways (Interstate and non Interstate), including Special Route Freeways, the desired underclearance shall be 17'-3" (minimum 17'-0"). (11-28-2011)

A vertical underclearance of 23'-0" is required for highway grade separations over railroads when constructing a new bridge or removing the existing superstructure. For preventative maintenance, rehabilitation and deck replacement projects the existing railroad vertical underclearance does not need to be increased unless requested by the Railroad. (11-28-2011)

Clearance signs are to be present for structures with underclearance of 16'-0" or less (show dimensions 2" less than actual). See http://mdotwas1.mdot.state.mi.us/public/tands/plans.cfm for additional information and guidelines. (11-28-2011)

7.01.08 (continued)

Vertical Clearance

A. Requirements

For shared use paths (pedestrian and bicycle), the vertical clearance to obstructions, including overhead fencing, shall be a minimum of 8'-6" (10'-0" desired). However, vertical clearance may need to be greater to permit passage of maintenance and emergency vehicles. In undercrossings and tunnels, 10'-0" is desirable for vertical clearance. See AASHTO's Guide for the Development of Bicycle Facilities. (9-2-2003)

B. Interstate Vertical Clearance Exception Coordination (11-28-2011)

In addition to normal processing of design exceptions, all proposed design exceptions pertaining to vertical clearance on Interstate routes including shoulders, and all ramps and collector distributor roadways of Interstate to Interstate interchanges will be coordinated with the Surface Deployment and Distribution Command Transportation Engineering Agency (SDDCTEA). The only Interstate routes the SDDCTEA is interested in are the routes that require a 16'-0" vertical clearance. These routes include all the Interstate system including US -131 between I-196 and I-96 (this roadway is technically I-296 but not signed as such). This requirement does not apply to Special Routes (1). (12-5-2005)

MDOT (or its Consultant) is responsible for coordinating exceptions on all projects regardless of oversight responsibilities. MDOT will send a copy of all requests, and responses, to the FHWA. Michigan Interstate Vertical Clearance Exception Coordination, MDOT Form 0333, is available from MDOT web site. (11-28-2011)

Requests for coordination shall be emailed or sent to:
Jason W. Cowin, P.E.
Senior Engineer, Highway Systems
Highways for National Defense
ATTN: SDDCTEA
709 Ward Drive, Building 1990
Scott AFB, IL 62225
Telephone: 618-220-5229, Fax: 618-220-5125
Email: jason.cowin@us.army.mil

MDOT (or its Consultant) shall verify SDDCTEA receipt of the request. If no comments are received within ten working days, it may be assumed that the SDDCTEA does not have any concerns with the proposed design exception.

CHAPTER 9

DETAILING PRACTICES

9.00

DETAILING PRACTICES

This chapter discusses the preparation of plan drawings and recommended practices for the details to be shown on the plans. Plans must be complete and concise. All material shown must be relevant to the construction of the project, and material not essential to the design and bidding of the project must be omitted.

In order to produce uniformity in the plans, it is important to standardize various items such as plan sheets, symbols and abbreviations.

Drafting details and practices, cell libraries and other MicroStation related files can be found on the MDOT Design Services Website. (8-20-2009) (5-28-2013)

9.01

PLAN SHEETS

Final plan sheets shall be prepared in CAD format and converted to Adobe Acrobat "PDF" format when submitting to MDOT Specifications & Estimates Section and MDOT Project Manager. (8-20-2009)

9.02

DRAFTING GUIDES (8-20-99)

In order to achieve a high degree of accuracy and efficiency, the following guidelines should be used. Accuracy of dimensions shown on the plans should be based on the degree of accuracy of the data on which the dimensions are based. For instance, construction dimensions should have the same accuracy as the survey data supplied. In general the degree of accuracy for the following items should be as shown:

Concrete Elevations	0.01 ft.
Concrete Detail Dimensions	1/8"
Steel Detail Dimensions	1/8"
Angles	1 sec.
Screed Elevations	0.01 ft.
Ground Elevations	0.1 ft.

9.02.01

Abbreviations

Avoid using abbreviations that may be misunderstood. Any unusual abbreviations should be identified in the plan notes of the sheet on which they appear. Some abbreviations that are commonly used on MDOT bridge plans are listed in Appendix 9.02.01.

9.02.02

Symbols

Many symbols have been standardized by the Design Division. They shall be used on all applicable detail drawings for structures. Some symbols commonly appearing on bridge plans are shown in Appendix 9.02.02. Additional symbols may be found in the Road Design Manual.

9.02.03

Naming Convention For Files
(12-5-2005)

For naming conventions of MDOT road and bridge files see the MDOT V8i CADD File Naming Standards Standards . (8-20-2009) (5-28-2013)

9.02.04

Structure Designations and TRNS•PORT

A. Structure Designations

The structure number identifies a particular bridge by indicating the type of service and location. The number is assigned within a particular control section. The letter indicates the type of facility.

Letter	Type of Facility
B	**Highway over Waterway**
S	**Highway over Highway**
R	**Highway over Railway**
X	**Railway over Highway**
P	**Pedestrian Overpass**
C	**Highway over Culvert Waterway**
V	**Highway over Non-motorized**
N	**Non-motorized Traffic (Bicycle)**
T	**Tunnel, Highway through**
W	**Retaining Wall**
Z	**Miscellaneous (Plaza, Building, etc.)**

The numbers indicate the sequential number of the structure within the control section, beginning with 01.

Examples:

B01	First waterway structure within control section
B11	Eleventh waterway structure within control section
S01	First highway grade separation

Structures with a closed median shall be considered **one** structure, not two.

9.02.04 (continued)

To distinguish between structures whose identifications are the same, but whose attributes require recording more than one structure a subsequent number is added. Structures with a common abutment are in this category.

Number	Structure Portion
1	**Northbound portion of structure**
2	**Southbound portion of structure**
3	**Eastbound portion of structure**
4	**Westbound portion of structure**
5	**Secondary Northbound portion or NE Quadrant Ramp**
6	**Secondary Southbound portion or SW Quadrant Ramp**
7	**Secondary Eastbound portion or SE Quadrant Ramp**
8	**Secondary Westbound portion or NW Quadrant Ramp**

Examples:

B01-1	Northbound portion of B01
B01-2	Southbound portion of B01
S01-7	SE Quadrant Ramp of S01

B. TRNS•PORT

Structure designations shall be utilized in identifying structure specific pay items in TRNS•PORT. This utilization is through the use of the breakdown ID's, which is found at the project level of TRNS•PORT. Breakdown ID's are the method of linking the plan quantities to the quantities found in TRNS•PORT. In road projects, the breakdown ID's are the plan sheet numbers, whereas in structure projects, the breakdown ID's are labeled with the structure number (designation). Pay Items referring to structures containing a subsequent structure number, (e.g. B01-**1**), require inclusion of the subsequent structure number in the breakdown ID's in TRNS•PORT. These breakdown ID designations should also be included in the pay items (quantities) contained in the plans.

10.02

SHOP DRAWING PRODUCTION

The Contractor shall make arrangements to permit MDOT to deal directly with the fabricator or supplier for the following or similar items:

A. Fabricated Structural Elements

B. Mechanical Equipment

C. Electrical Equipment and Circuitry

D. Water Mains

E. MSE walls (8-20-2009)

F. Precast Culverts (8-20-2009)

10.02.01

Shop Drawing Submittal

The fabricator shall submit drawings in Adobe Acrobat "PDF" format to MDOT Design Division, for highway and pedestrian bridges designed by MDOT. For structures carrying railroads over highways and for projects designed by consultants, submittals should be according to Subsections 10.03.02 and 10.04.02 respectively. (8-20-2009)

10.02.02

Shop Drawing Review

The Design Division, the Structural Fabrication Unit of the Operations Field Services Division, and any Railroad or consultant involved shall review the drawings. Normally, the Structural Fabrication Unit will review only shop drawings for structural steel, prestressed concrete beams, precast culverts and fabricator designed bearings and metal stay-in-place forms. The Load Rating Engineer of the Design Division shall review the shop drawings and load rating calculations for culverts over ten feet in span length. Shop drawings for MSE walls will be reviewed by the Foundation Analysis Engineer of the Operations Field Services Division, Geotechnical Services Section. The Design Division shall electronically stamp all drawings either "Approved" or "Approved Subject to Correction." The drawings will also be stamped with the signature of the Engineer of Design Operations - Structures Section. Stamped drawings (in PDF format) will be returned to the fabricator.
(8-20-2009) (5-28-2013)

The shop bills for structural steel weights letter of transmittal shall show the fabricator's weight, the Design Division's checked weight, and the contract weight. (8-20-2009)

10.02 (continued)

SHOP DRAWING PRODUCTION

10.02.03

Shop Drawing Distribution
(8-20-2009) (5-28-2013)

After the necessary corrections have been made by the fabricator, he/she shall submit shop drawings (in PDF format) to the Design Division for distribution. All drawings must be stamped "Approved" and must be stamped with the signature of the Engineer of Design Operations - Structures Section. Combine the drawings and transmittal (approval) correspondence and name the file with the bridge ID and type of drawing, ex. "S08-51325BOXBEAM.PDF". The Design Division will distribute drawings and transmittal correspondence as follows:

A. ProjectWise (MDOT internal plan management system)

   Save the file (drawings and correspondence) in the folder entitled "Letting Plans and Proposal" and the sub-folder entitled "Plan Revisions and Shop Drawings". If the sub-folder has not been created, contact the local or central office ProjectWise Administrator for assistance.

B. Fabricator or supplier

C. Resident/Delivery Engineer *

D. Construction Field Services Division *
   Geotechnical Services Section,
   Foundation Analysis Engineer
   (MSE walls only)

E. Operations Field Services
   Bridge Field Services,
   Structural Fabrication Unit

F. Design Division

   1. Bridge Management Unit

   2. Load Rating Engineer
      (Culverts over 10 ft)

10.02.03 (continued)

Fabricator shall submit shop bills (in PDF format) for steel items to the Design Division. Shop bills will be stamped as noted above. Stamped drawings/bills will be sent to fabricator and the Resident/Delivery Engineer and placed in ProjectWise.

* From ProjectWise, send an email link from ProjectWise "PDF" file, to all affected "MDOT" staff notifying them that shop drawings (shop bills) are available.

For additional information and procedures regarding MDOT Projectwise see pwname://MDOTProjectWise/Documents/Reference Documents/E-Proposal/Plan Rev-Shop Drawings
(8-20-2009)

10.03

SHOP DRAWINGS FOR RAILROAD STRUCTURES

When a railroad crosses over a highway, the Railroad must review and approve shop drawings for that structure.

10.03.01

Review Time

At the pre-construction meeting the Contractor must be made aware of the extra time required for review of the shop drawings by the Railroad.

10.03.02

Fabricator Submittal

The fabricator shall submit shop drawings (in PDF format) to MDOT for review. MDOT will forward shop drawings (in PDF format) to the Railroad for review and after approval.
(8-20-2009)

10.04

SHOP DRAWINGS FOR CONSULTANT-DESIGNED JOBS

When a structure has been designed by a consultant, shop drawing review will, in general, be a separate part of the Scope of Work defined in the Consultant Agreement. The review of shop drawings and structural steel pay weights shall be as described in sections 10.01-10.03. The consultant shall send copies of all correspondence (in PDF format) to the MDOT Consultant Coordinator. (8-20-2009)

10.04.01

Review Time

Except for the time required for transmittal to and from the consultant, there will be no extra time allotted for the review of the shop drawings by the consultant.

Consultant projects which include contractor designs for cofferdams, temporary sheet pile and other earth retention systems shall include hours for shop drawing review by the prequalified geotechnical design firm of record. Review time required shall be dependent upon project details and specified within the contract documents. (5-28-2013)

10.04.02

Fabricator/Consultant Submittal

The consultant shall receive shop drawings from the fabricator for review. A copy of the transmittal letter from the fabricator to the consultant and shop drawings (in PDF format) shall also be sent to MDOT Consultant Coordinator. The consultant shall also forward shop drawings (in PDF format) to the Structural Fabrication Unit, Load Rating Engineer(drawings and load rating calculations for culverts over 10 feet) and Geotechnical Services Section (MSE walls) of Construction Field Services Division, for review. If a railroad crosses over a highway, the railroad company must also be sent drawings for review and approval.
(8-20-2009) (5-28-2013)

10.04.03

Shop Drawing Review

(11-26-99) After reviewing the details and receiving comments from other reviewing agencies, the consultant shall coordinate the comments on the shop drawings and send them back to the fabricator. These plans shall be stamped approved or approved subject to correction. The approval stamp shall imprint APPROVED FOR MDOT By “consultant’s name”, along with the date. The consultant shall retain the drawings and comments to review the fabricators corrected drawings.

10.04.04

Shop Drawing Distribution (8-20-2009)

The consultant shall receive corrected shop drawings from the fabricator for distribution. If all corrections have been made, the consultant shall stamp all the drawings approved. The consultant shall distribute the drawings (in PDF format) to:

A. Fabricator
B. MDOT Resident/Delivery Engineer
C. Structural Fabrication Unit
D. MDOT’s Design Consultant Coordinator
E. Consultants Files
F. Railroad Company (railroad over a highway)
G. Geotechnical Services Section, Foundation Analysis Engineer (MSE walls only)
H. Load Rating Engineer (Culverts over 10 feet)

10.04.05

Structural Steel and Other Pay Weights

The consultant shall review and approve the structural steel pay weights submitted by the fabricator. The fabricator shall submit pay weights (in PDF format) to the consultant. Pay weights will be stamped as noted in section 10.04.03. Stamped pay weights will be returned to fabricator, sent to the Construction Resident/Delivery Engineer, go to the consultant files and sent to the MDOT Design Consultant Coordinator. (8-20-2009)

11.02

PLAN REVISION PREPARATION

11.02.01

General Procedure (8-20-2009)

The following guidelines should be used in preparing plan revisions:

A. Revise CAD files affected and produce new plan sheets (8½" x 11" sheets for log job).

B. Prepare Revision of Plans Form 291 and Plan Revision Distribution Form 211. For examples of these forms see Appendix 11.02.01 or MDOT web site. (8-6-92) (5-28-2013)

C. Submit the completed forms and revised plan sheet(s) (if required) in Adobe Acrobat "PDF" format to the following for signatures:

   1. Project Manager/ Development Engineer. (12-5-2005)
   2. Resident/Delivery Engineer (12-5-2005)

11.02.01 (continued)

D. Combine signed/approved Revision of Plans Form 291, Plan Revision Distribution Form 211 and the revised plan sheets (if required) in Adobe Acrobat "PDF" format and name the file PLANREV1.PDF (or subsequent numerical naming if multiple).

E. Save the file (drawings and forms) in ProjectWise (MDOT internal plan management system) in the folder entitled "Letting Plans and Proposal" and the sub-folder entitled "Plan Revisions and Shop Drawings". If the sub-folder has not been created, contact the local or central office ProjectWise Administrator for assistance.

   For additional information and procedures regarding MDOT ProjectWise see pwname://MDOTProjectWise/Documents/Reference Documents/E-Proposal/Plan Rev-Shop Drawings

CHAPTER 12 REHABILITATION PROJECTS (continued)

12.08 MISCELLANEOUS REHABILITATION

12.08.01 Field Inspections

12.08.02 Concrete Repair - General (10-24-2001)

12.08.03 Substructure Repairs

12.08.04 Repair of Overhead Concrete Surfaces

12.08.05 Expansion Anchored Bolts

12.08.06 Deck Patching (5-1-2000)

12.08.07 Temporary Support Systems (8-6-92)

12.08.08 Roadway Widening With Filler Walls (3-26-2012)

12.09 BRIDGE DECK REPAIR STRATEGY (8-6-92) (3-26-2012)

12.09.01 Deck Restoration

12.09.02 Bridge Deck Preservation Matrix (10-24-2001)

Appendix 12.01.01 Detroit Metropolitan Area (8-6-92)

Appendix 12.02 Clear Roadway Widths and Design Loading (9-1-88)

Appendix 12.02.01 Design Exception Requirements - Vertical Clearance (5-1-2000)

Appendix 12.03.01 A. Request For Traffic Information (Form 1730) (5-1-2000)

Appendix 12.03.01 B. Sample request for Accident Analysis and Safety Review (5-1-2000)

12.01.01

Structures Carrying Pedestrian Traffic

Where pedestrian traffic exists across a structure having sidewalks less than 4'-0" wide, an evaluation must be made to determine the hazard involved and to consider practical improvements.

All structures carrying pedestrians need to be evaluated for conformance with the Americans with Disabilities Act (ADA) requirements.

Regardless of project work type, expansion joints located on sidewalks shall be fitted with cover plates to eliminate vertical depressions caused by the joint. Cover plates may be galvanized steel (AASHTO M270, Grade 36) or steel encapsulated in EPDM rubber or neoprene (polychloroprene). Cover plates shall meet all the requirements set forth by ADA. See Section 7.02.27 & 12.06.01 and EJ3 & EJ4 Sheets. (8-20-2009) (3-26-2012)

Where recommended by the Region Project Development or Bridge Engineer, rehabilitation projects should include pedestrian fencing. In Metro Detroit, all rehabilitation projects, including painting projects, over freeways should include pedestrian fencing.

For limits of the metropolitan area see Appendix 12.01.01. (8-6-92)

For information regarding MDOT fencing policy and design criteria see Section 7.02.29 and Section 7.05.

12.01.02

Historic Bridges

Consideration must be given to preserving structures designated as “historic bridges.” The project engineer can find a bridge’s historical significance from the Structural Inventory and Appraisal form (SI&A), item 37. The Transportation Management System (SMS) has the SI&A data for all the state bridges. Alternatively, PE’s can find data for all historical bridges through the Michigan Structural Inventory and Appraisal Coding Guide. (5-28-2013)

Designers rehabilitating historically designated bridges shall contact the Cultural Resource Coordinator in the Environmental Section of the Transportation Planning Services Bureau to determine what measures are practical and justified to preserve the historical value. Where projects are insufficiently scoped for the proposed work, adding significantly to the cost of the project, the designer shall request the Region Project Development Engineer to appropriate the additional funds from their bridge budget.

12.03

DESIGN EXCEPTIONS

Design Exceptions shall be identified and completed during the Scope Verification Process. Submittals of Design Exceptions on a timely basis are essential to maintain the project schedule and provide an approved design where conditions may inhibit designers from meeting the required design criteria. (8-20-2009)

(9-1-88) When a proposed structure rehabilitation financed by federal funds will not upgrade the structure to minimum standards (design criteria), the Project Manager should complete the appropriate portions of the Design Exception Request (FC26 and FC26Instructions). For projects with "FHWA Oversight" (formerly known as non-exempt projects) submit this form to the Engineer of Design Programs and subsequently to the FHWA Area Engineer. For projects with "MDOT Oversight" (formerly known as exempt projects) submit the form to the Engineer of Design Programs. If approved, the appropriate entity will return a copy, signed and dated. Reference to this approval should be made in our subsequent transmittal of preliminary plans. A signed copy of the Design Exception Request form should be placed in the project file. (12-5-2005)(1-14-2013) (5-28-2013)

When a proposed road rehabilitation project financed by federal funds contains a bridge not conforming to minimum standards, and no work is proposed for the bridge, the road Design Engineer/Project Manager will prepare the design exception request for transmittal to the Engineer of Design and subsequently to the FHWA Area Engineer. This includes non interstate bridges not being altered on road projects which do not meet new/reconstruction criteria (standards). (8-20-2009)

12.03.01

Requests for Traffic Volumes and Crash Histories

(9-1-88) When requesting traffic volumes and crash histories, the Design Engineer should advise the appropriate Division or Support Area as to when the response is needed to meet the schedule for plan preparation. The request should also identify any other work included within the project limits, e.g., additional bridges or road construction.

A. Traffic Volumes(Traffic Analysis Request)

Send requests for traffic volumes to the Bureau of Transportation Planning, Project and Plan Development Division using MDOT Form 1730 (see Appendix 12.03.01 A.) (5-1-2000) (5-28-2013)

B. Crash Histories

Send requests for crash histories to the appropriate Region or Lansing Traffic and Safety personnel. (See sample submittal in Appendix 12.03.01 B.) (9-2-2003)

Where underclearance is the only design exception, however, the concern about crashes is limited to impacts from high loads. This history and the approximate traffic volume are most expeditiously obtained from the Bridge Management Unit of Design Division. (8-6-92) (3-26-2012)

12.09

BRIDGE DECK REPAIR STRATEGY (3-26-2012)

12.09.01

Deck Restoration

Restoration of deteriorated decks includes everything from crack sealing to complete replacement. The alternative selected will be influenced by the factors listed in the Bridge Deck Preservation Matrix (Section 12.09.02) and by judgment. The Construction Engineer should be consulted in most cases as he/she is aware of current costs, equipment, and contractor capability.

At locations where traffic volumes are high, the maintenance of traffic may influence the selection of the restoration treatment.

The Region Project Development Engineer will consider future work in the area. This may influence the repair strategy. It should be recognized that several years will elapse between the inspection/scoping and the work of rehabilitation. Allowance for additional deterioration during this period should be made when selecting an appropriate rehabilitation measure. (5-1-2000)

12.09.02

Bridge Deck Preservation Matrix
(5-1-2000)

The Bridge Deck Preservation Matrix (Uncoated Black Bar or Epoxy Coated Rebar), gives recommended repair methods for various deck conditions. The repair strategies are based on National Bridge Inventory ratings provided from bridge inspection and scoping documents.

In general, the condition of the underside of the deck is of primary concern. Deck with sound undersides can be rehabilitated to a nearly “new” condition. The repair strategies for these structures will vary from patching and crack sealing for decks with good top surfaces, to deep overlays for decks with poor top surfaces.

Decks with undersides in poor conditions are either replaced, or repaired with a shorter term “fix.” This fix varies from a shallow concrete overlay to a hot mix asphalt (HMA) cap.
(9-2-2003)