Road & Bridge Design Publications

Monthly Update – September 2014

Revisions for the month of **September** are listed and displayed below. New special details will be included in projects submitted for the **December** letting as is stated on the special detail index sheets. E-mail questions related to the road changes to MDOT-Road-Design-Standards@michigan.gov & MDOT-Bridge-Design-Standards@michigan.gov for questions related to the bridge changes.

Special Details

Special Detail 99: Chain Link Fence with Wire Rope: A note in the note section was revised to state that wire ropes must be stretched taut.

Road Design Manual

5.24.03: ROW Sketches: Corrected the location of the Trunkline Railroad Crossing Unit in the note under the table from the Design Division to the Office of Rail.

6.03.10F: HMA Application Estimate: The example HMA application estimate was removed in favor of referencing a link to the Road Sample Plans.

Bridge Design Guides

Table of Contents: Added "6.65.02, 02A-B, Prestressed Concrete Box Beam Properties".

6.60.12: Updated concrete insert options.

6.65.02, 6.65.02 A, 6.65.02 B: Reissued guides with box beam properties.

7.15.01: Updated the shape of bar "F". Old bar "F" can be detailed by setting the dimensions "g", "h", and "j" to zero.

Updates to MDOT Cell Library, Bridge Auto Draw Program, etc., may be required in tandem with some of this month's updates. Until such updates to automated tools can be made, it is the designer's/detailer's responsibility to manually incorporate any necessary revisions to notes and plan details to reflect these revisions.

Index to Special Details

9-22-2014

⑥

SPECIAL DETAIL NUMBER	NUMBER OF SHEETS	TITLE	CURRENT DATE
21	2	GUARDRAIL AT INTERSECTIONS	5-24-01
24	5	GUARDRAIL ANCHORED IN BACK SLOPE TYPES 4B & 4T	7-22-02
*99	2	CHAIN LINK FENCE WITH WIRE ROPE	9-22-14
R-30-G	2	CONCRETE CURB AND CONCRETE CURB & GUTTER	2-6-14
R-110-A	3	PAVEMENT SAFETY EDGE	3-17-14
R-126-I	5	PLACEMENT OF TEMPORARY BARRIER	3-26-12

*** Denotes New or Revised Special Detail to be included in projects for (beginning with) the December letting.**

Note: Former Standard Plans IV-87, IV-89, IV-90, and IV-91 Series, used for building cast-in-place concrete head walls for elliptical and circular pipe culverts, are now being replaced with plans that detail each specific size. The Municipal Utilities Unit will provide these full sized special details for inclusion in construction plans for MDOT jobs. To assure prompt delivery, requests ***must*** be made in advance.

Former Standard Plans IV-93 and IV-94 series have been replaced with precast concrete box & three-sided culverts as per the 2012 Standard Specifications for Construction.

Index to Bridge Detail Sheets

9-22-2014

⑦

DETAIL NUMBER	NUMBER OF SHEETS	TITLE	CURRENT DATE
EJ3AA	1 or 2	EXPANSION JOINT DETAILS	6-16-14
EJ4N	1 or 2	EXPANSION JOINT DETAILS	6-16-14
B-25-H	6	BRIDGE RAILING, AESTHETIC PARAPET TUBE	11-27-13
PC-2G	1	70" PRESTRESSED CONCRETE I-BEAM DETAILS	3-31-06
PC-4E	1	PRESTRESSED CONCRETE 1800 BEAM DETAILS	3-31-06
PC-1L	1	PRESTRESSED CONCRETE I-BEAM DETAILS	7-12-06

*** Denotes New or Revised Special Detail to be included in projects for (beginning with) the December letting.**

Note: Details EJ3AA & EJ4N are interactive, i.e. designers and detailers choose details based upon railing type and angle of crossing. Place all details appropriate for the project, structure specific information, and the Expansion Joint Device quantity on the sheet. The sheet shall then be added to the plans as a normal plan sheet.

Detail PC-1L, PC-2G and PC-4E shall have structure specific information and quantities added to the sheet. The sheet shall then be added to the plans as a normal plan sheet.

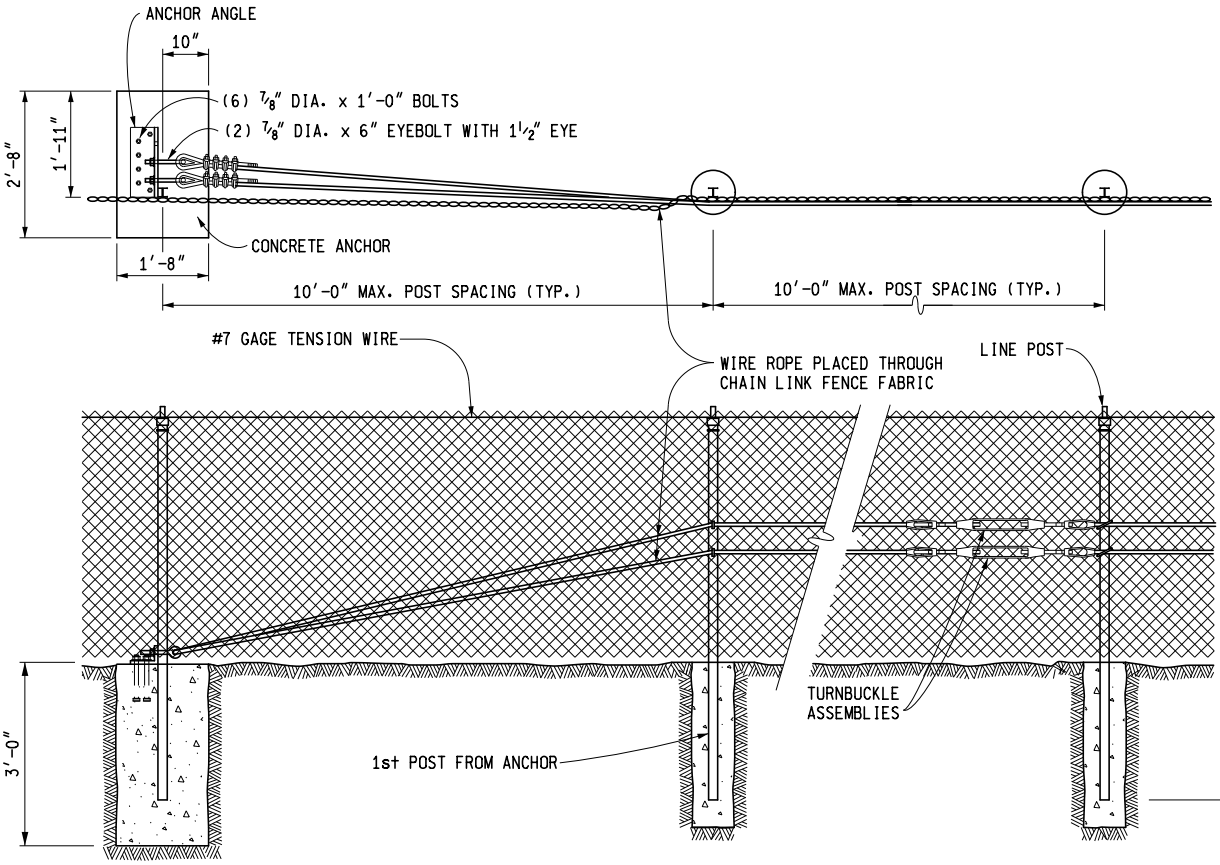

ELEVATION

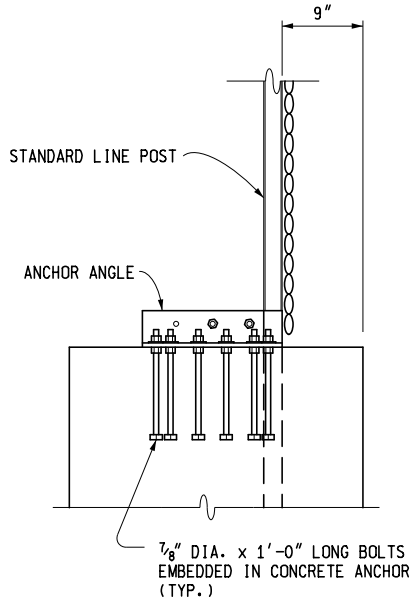

END VIEW OF CONCRETE ANCHOR

CONCRETE QUANTITY FOR ANCHOR = 0.5 CYD

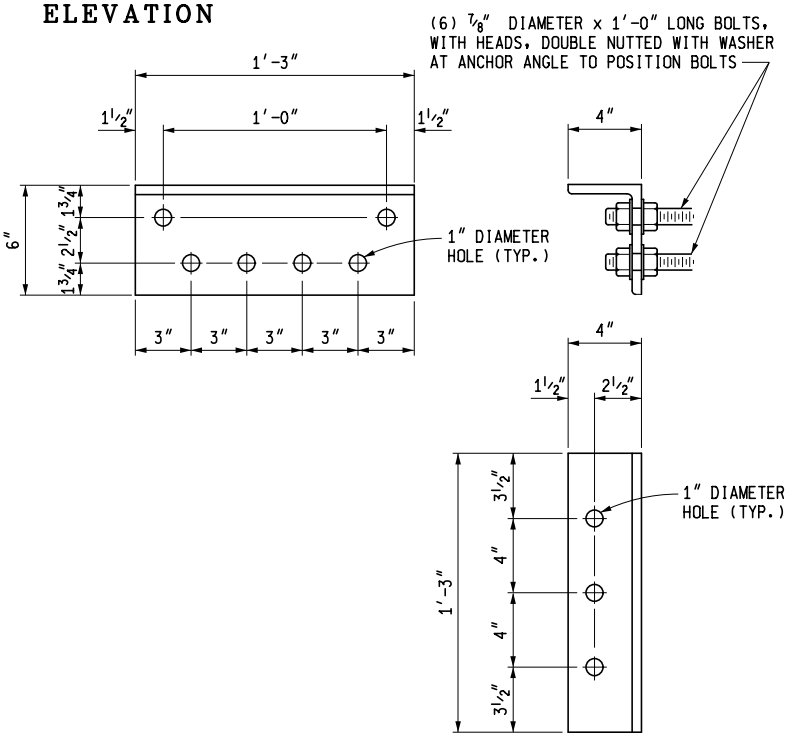

L6" x 4" x 1/2" x 1'-3" LONG ANCHOR ANGLE

MDOT Michigan Department of Transportation	DEPARTMENT DIRECTOR Kirk T. Steudle	MICHIGAN DEPARTMENT OF TRANSPORTATION BUREAU OF HIGHWAY DEVELOPMENT SPECIAL DETAIL FOR
PREPARED BY DESIGN DIVISION	APPROVED BY: _____ DIRECTOR, BUREAU OF FIELD SERVICES	CHAIN LINK FENCE WITH WIRE ROPE
DRAWN BY: B.L.T.	APPROVED BY: _____ DIRECTOR, BUREAU OF HIGHWAY DEVELOPMENT	F.H.W.A. APPROVAL
CHECKED BY: W.K.P.		9-22-2014 PLAN DATE
		SPECIAL DETAIL 99
		SHEET 1 OF 2

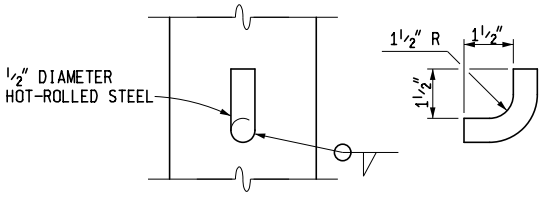

NOTE:
THE WELDED 1/2" DIAMETER HOT-ROLLED BAR AND THE WIRE ROPE SHALL BE FASTENED TO THE LINE POSTS THAT ARE SPECIFIED ON STANDARD PLAN R-98-SERIES.

1/2" DIAMETER HOT ROLLED BAR

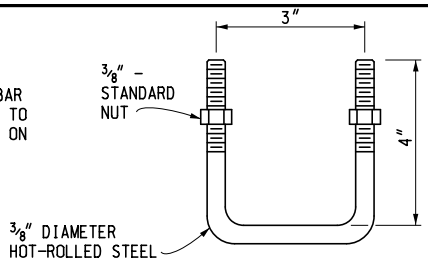

U-BOLT WITH NUTS

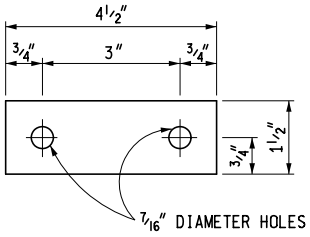

U-BOLT WASHER

1/4" THICK HOT-ROLLED STEEL

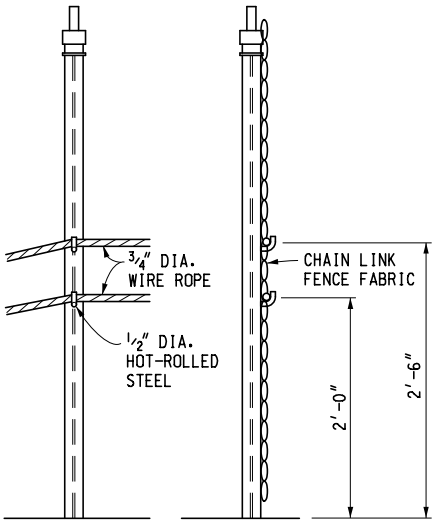

1st POST FROM ANCHOR

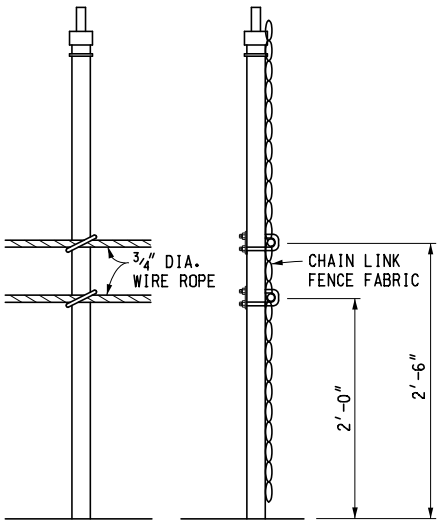

WIRE ROPE INSTALLED TO LINE POST WITH U-BOLTS

3/4" DIAMETER WIRE ROPE (3 X 7)

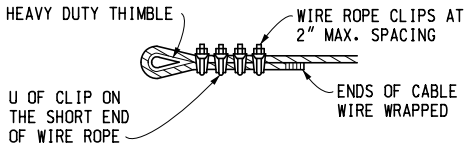

WIRE ROPE LOOP ENDING

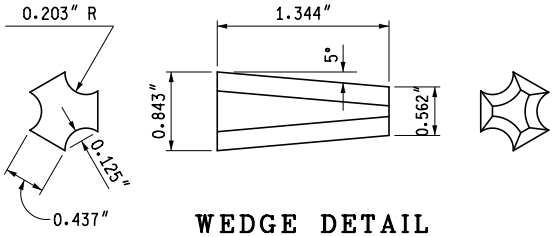

WEDGE DETAIL

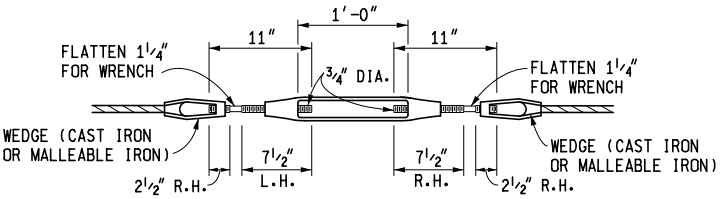

TURNBUCKLE WIRE ROPE ASSEMBLY

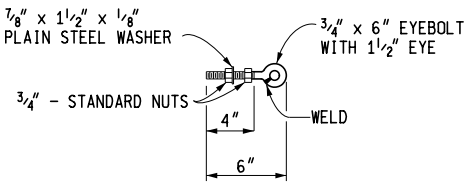

WELDED EYE-BOLT WITH NUTS & WASHER

NOTES:

CHAIN LINK FENCE WITH WIRE ROPE SHALL BE INSTALLED ACCORDING TO THIS PLAN AND STANDARD PLAN R-98-SERIES. THE WIRE ROPE SHALL BE ANCHORED ACCORDING TO THIS PLAN AND INSTALLED ON STANDARD FENCE POSTS FOR CHAIN LINK FENCE WITH CHAIN LINK FABRIC PLACED ON THE INSIDE OF WIRE ROPE. THE POST NEXT TO THE ANCHORAGE REQUIRES SPECIAL FABRICATION (SEE DETAIL). ALTERNATE DESIGNS MAY BE SUBMITTED TO THE ENGINEER FOR CONSIDERATION AND APPROVAL.

ALL POSTS, WIRE ROPES, AND FITTINGS SHALL BE GALVANIZED ACCORDING TO THE CURRENT STANDARD SPECIFICATIONS.

ALL WELDING SHALL BE DONE ACCORDING TO THE CURRENT STANDARD SPECIFICATIONS. TURNBUCKLES SHALL BE OF THE OPEN TYPE AND SHALL EACH PROVIDE A MINIMUM TAKEUP OF 1'-0".

ANCHORAGE SHALL BE PROVIDED ON EACH END OF CABLES WITH ONE TURNBUCKLE FOR EACH 500' RUN OF WIRE ROPE. MAXIMUM DISTANCE BETWEEN ANCHORAGES SHALL BE 1000'. WHEN PLACING WIRE ROPE IN EXISTING FENCE, THE CONCRETE ANCHORS MAY BE PLACED 2'-0" BEYOND THE 10'-0" TYPICAL POST SPACING, LEAVING THE EXISTING POST IN PLACE.

TENSION WIRE AND WIRE ROPES SHALL BE STRETCHED TAUT.

TOP AND BOTTOM SELVAGES OF FENCE FABRIC SHALL HAVE A KNUCKLED FINISH.

MICHIGAN DEPARTMENT OF TRANSPORTATION
BUREAU OF HIGHWAY DEVELOPMENT SPECIAL DETAIL FOR

CHAIN LINK FENCE WITH WIRE ROPE

F.H.W.A. APPROVAL	9-22-2014 PLAN DATE	SPECIAL DETAIL 99	SHEET 2 OF 2

5.23 (revised 2-27-2012)

R.O.W. SUMMARY

The preceding commentary on the processing of R.O.W. plans should be considered as a general guideline only. Each project will have to be examined for special or unique features that might require further study. These should be discussed with the Design R.O.W. Engineer (liaison between Design and the Development Services Division).

Preliminary reviews will help to reduce the number of R.O.W. revisions. Changes in R.O.W. design, after it has been submitted, must be held to a minimum. In some cases the R.O.W. may already have been acquired, as detailed on previously submitted plans. Changes usually dictate that additional time may be needed to clear R.O.W. and additional expenses charged to the project. To avoid interference or delay during construction, the Development Services Division must be satisfied that all requirements are met. Revisions in R.O.W. can be avoided by making certain concessions in the form of ditch changes, steeper slopes, etc., to stay inside the R.O.W. as previously submitted. These practices should be encouraged insofar as they do not materially detract from the concepts of a good design and/or safety.

5.24 (revised 9-22-2014)

R.O.W. SKETCHES

The R.O.W. sketches included in this section should be considered general guidelines for depicting certain situations only. The sketches are not intended to show complete R.O.W. dimensioning for every situation.

5.24

R.O.W. SKETCHES

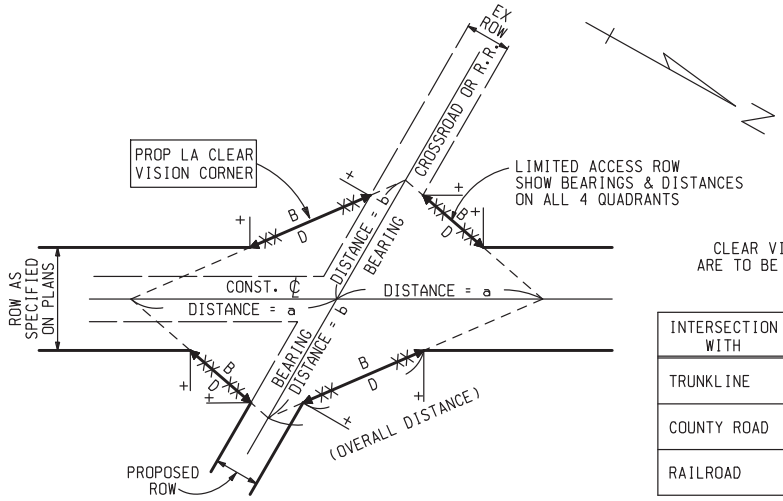

FOR SINGLE ROADWAY

CLEAR VISION CORNERS ARE TO BE LIMITED ACCESS

INTERSECTION WITH	LOCATION	a	b
TRUNKLINE	RURAL	300′	300′
COUNTY ROAD	RURAL	300′	200′
RAILROAD	RURAL	*	*

* REFER TO THE TRUNKLINE RAILROAD CROSSING UNIT OF THE OFFICE OF RAIL

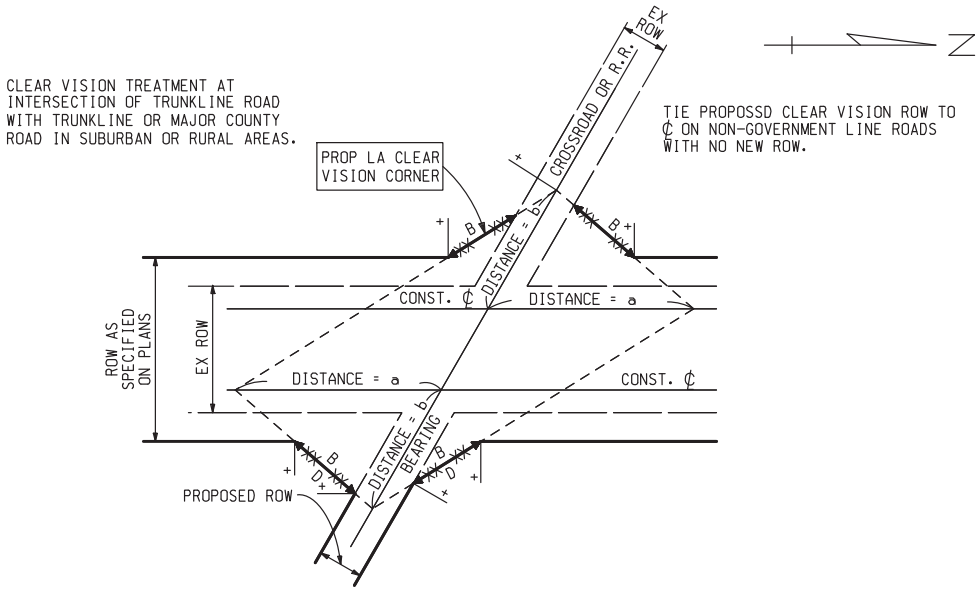

FOR DUAL ROADWAY

SKETCHES SHOWING DIMENSIONS FOR CLEAR VISION AREAS

Figure 5.24.03

6.03.10 (revised 9-22-2014)

Plan Development Using HMA Mix Selection Guidelines

A. General

The Designer should consult with Department HMA experts when questions arise concerning HMA mixtures. These experts consist of members of the Bituminous Section, the Pavement Design Engineer, and other department personnel who are responsible for pavement design.

B. Past Mixture Designations

Designers researching plans for old projects should have some familiarity with HMA mixture designations formerly used, as well as those in present use. Beginning with the 1957 ***Standard Specifications for Construction***, there were basically three HMA plant mixtures: 4.09 Bituminous Aggregate Surface Course, commonly referred to as oil aggregate; 4.11 Bituminous Aggregate Surface Course-Hot Plant Mix, commonly referred to simply as bituminous aggregate; and 4.12 Bituminous Concrete Pavement, called bituminous concrete. The oil aggregate mixture was rarely if ever used on state trunkline projects, and bituminous aggregate was used only on the lesser traveled trunklines. Bituminous concrete was most frequently used for trunkline resurfacing and for state projects in cities.

Beginning with the 1979 ***Standard Specifications for Construction***, designations were changed. The 4.09, 4.11, and 4.12 mixtures became No. 9, No. 11, and No. 12 respectively. There were a number of sub-designations relative to stone size in the mix, as well as the material being either leveling course or top course.

In late 1981 the Department adopted a supplemental specification that labeled HMA mixtures with a number corresponding to their minimum required Marshall Test stability. (These have come to be called "stability mixtures" or "performance mixes".)

6.03.10B (continued)

In early 1992, the Department revised the HMA Specifications once again. This was in response to wheel rutting problems experienced with the former stability-based mixes. These new mixes are referred to as Marshall Mixes.

The following historical HMA mixtures are listed with their approximate replacements in terms of their former designations:

Stability Mixes	Marshall Mixes
#500	11A
#700	11A
#1100	13 or 13A
#1300	"B" series
#1500	"C" series

In 1997, the Department began implementing Superpave Mixtures. Superpave (short for SUperior PERforming Asphalt PAVEments) was developed from the Strategic Highway Research Program of the late 1980's and early 1990's. It consists of a classification system for asphalt binders (PG grading system), and a mix design methodology that replaces the Marshall method.

In 2000, the Department went to full implementation of Superpave for all mainline pavements. Marshall Mix designs (13A, 36A, and the C series) were still allowed for non-mainline paving such as shoulders wider than 8 feet, ramps, and low-volume Capital Preventive Maintenance projects.

In 2008, the Department moved to phase out the use of Marshall Mix designs. See Section 6.03.09 for the current HMA selection guidelines.

6.03.10 (continued)

Plan Development Using HMA Mix Selection Guidelines

F. HMA Application Estimate

Projects that include HMA surfacing have a tabulation entitled "HMA Application Estimate" on the typical cross-section sheet as shown in the Road Sample Plans. The tabulation is basically an attempt at simplifying the typical cross-section sheet by showing in tabular form, information that would otherwise be duplicated, perhaps several times on the typical cross-sections. It also serves to reduce clutter. The number and letter designations shown in the column "Ident. No." are shown on the various typical cross-sections and refer to rates and types of application that apply to the project.

G. Unusual Conditions

When it is proposed or the designer is asked to incorporate construction that is outside the norm of generally accepted procedure, the Pavement Design Engineer and the Bituminous Section of the Construction Field Services Division should be consulted. The staff in these divisions may in turn elect to take the proposed treatment to the Pavement Committee for further comment and consideration.

6.03.10 (continued)

H. Asphalt Usage Guidelines

MDOT adopted the use of Superpave HMA Designs in 1996. Superpave mixes resulted from the Strategic Highway Research Program (SHRP). The asphalt used in Superpave mixes are classified based on Performance Grade (PG). Performance Graded Asphalts are classified using the minimum and maximum temperatures that an HMA mix will experience at the location placed. The Department has monitored pavement temperatures around the state using temperature sensors. The data was used to determine which asphalt grades should be used in various regions of the state. Performance Graded Asphalts may or may not require an additive (Polymer) to meet the minimum and maximum temperature requirements specified. The MDOT 1996 ***Standard Specifications for Construction*** replace penetration grade asphalts with performance grade (PG) asphalt binders. Usage guidelines for PG asphalt binder grades are based on seasonal temperature variations and various traffic conditions. The EOC approved guidelines are shown in Section 6.03.09A(1d).

CONTENTS

SECTION 6 - SUPERSTRUCTURE (cont)

6.29.08	Bridge Barrier Railing, Type 5
6.29.08A	Bridge Barrier Railing, Type 5 (Mod.) for Railing Replacement
6.29.08B	Bridge Barrier Railing, Type 5 Aesthetic
6.29.09	Bridge Barrier Railing, Type 4
6.29.09A, B, C	Bridge Barrier Railing, Type 4 (Mod.) for Railing Replacement
6.29.09D	Bridge Barrier Railing, Type 4 (Two-stage Deck)
6.29.09E	Bridge Barrier Railing, Type 4 on Prestressed Box Beam Deck
6.29.09F	Bridge Barrier Railing, Type 4 Aesthetic
6.29.10, .10A-E	Bridge Railing, Aesthetic Parapet Tube Sections and Details
6.29.11	Joint Detail for Bridge Barrier Railing with Expansion Joint
6.29.13, .13A	Barrier Railing Details at Light Standard
6.29.15	Barrier Railing Details at Dependent Backwall
6.29.16, .16A	Barrier Railing Details at Independent Backwall
6.29.17, .17A-H	Bridge Railing, 4 Tube Sections and Details
6.41.01	Standard Bridge Slabs (Load Factor Design)
6.41.02	Standard Bridge Slabs (Empirical Design)
6.42.03	Slab Haunch & Reinforcement Cover
6.60.01	Prestressed Concrete I Beam Details
6.60.02	Michigan 1800 Girder
6.60.11, .11A	Pier Diaphragms for Prestressed Concrete Beams Continuous for Live Load
6.60.11B	Pier for Prestressed Concrete Box Beams Continuous for Live Load
6.60.12	Diaphragms for Prestressed Concrete I Beams
6.60.12A	Intermediate Steel Diaphragms for 28" Through 54" Prestressed Girders
6.60.12B	Intermediate Steel Diaphragms for 70" & MI 1800 Prestressed Girders
6.60.13	Details at Abutments for Prestressed Concrete I Beams
6.65.02, 02A-B	Prestressed Concrete Box Beam Properties
6.65.10, .11 6.65.10A-E	Prestressed Concrete Box Beam Reinforcement Details
6.65.12, .12A	Prestressed Concrete Box Beam Details
6.65.13, .13A	Prestressed Concrete Box Beam and Post - Tensioning Details
6.65.14, .14A	Prestressed Concrete Beam Lifting Device Details

DRAWN BY: BLT CHECKED BY: VZ APPROVED BY: DAJ	MICHIGAN DEPARTMENT OF TRANSPORTATION BUREAU OF HIGHWAY DEVELOPMENT DIAPHRAGMS FOR PRESTRESSED CONCRETE I BEAMS	ISSUED: 09/22/14 SUPERSEDES: 05/04/06

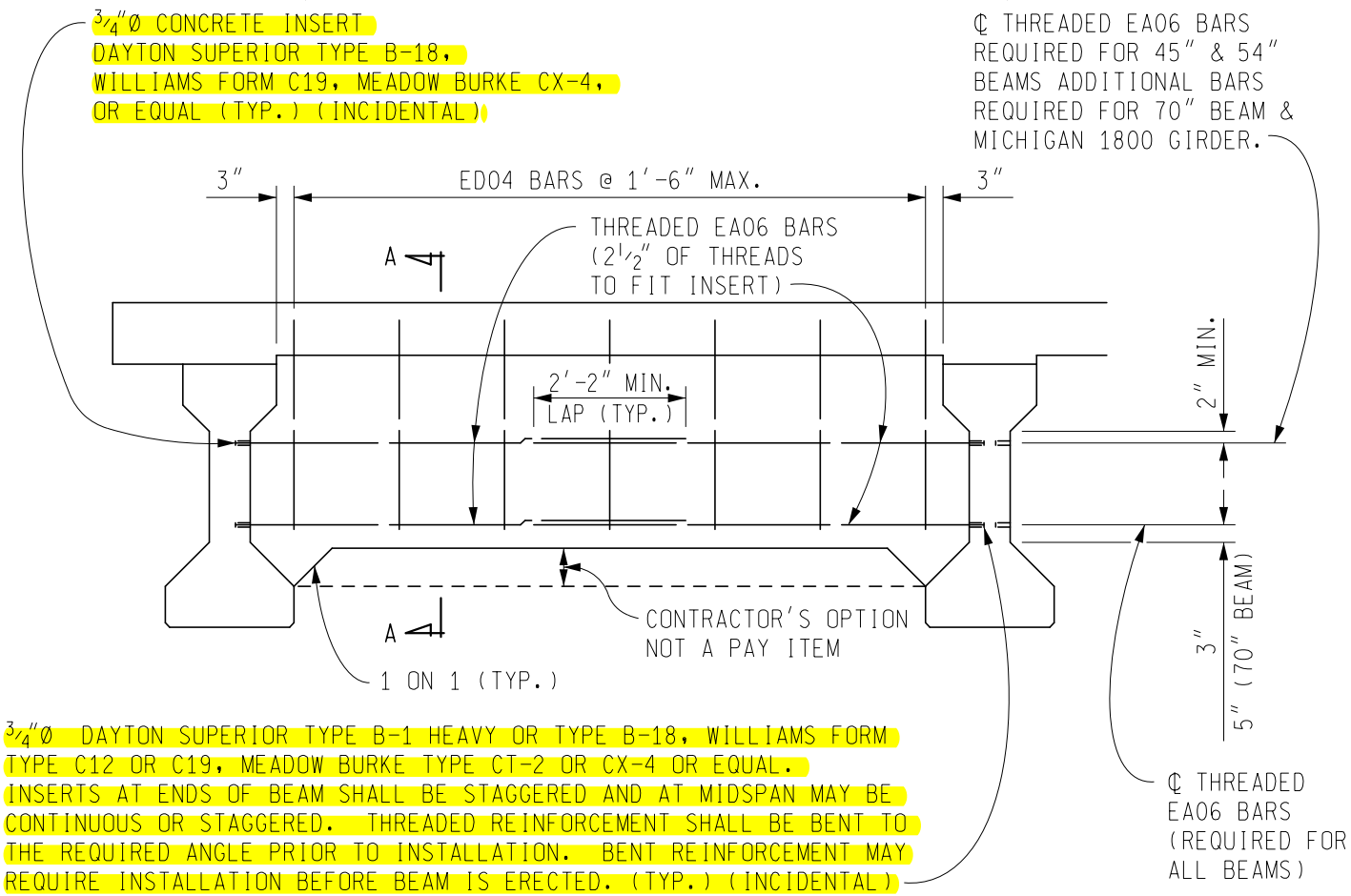

DIAPHRAGM ELEVATION

NOTES:

1. USE DIAPHRAGMS OVER PIERS, AT INDEPENDENT BACKWALLS AND AT HANGERS. PLACE DIAPHRAGMS PARALLEL TO REF. LINE
2. USE ONE INTERMEDIATE DIAPHRAGM AT MID-POINT.
3. FOR 60° ≤ Ø ≤ 90°, PLACE INTERMEDIATE DIAPHRAGMS PARALLEL TO REF. LINE.
4. FOR ANGLE OF CROSSING < 60°, SEE PLAN.
5. DO NOT POUR DECK UNTIL DIAPHRAGM CONCRETE ATTAINS A COMPRESSIVE STRENGTH OF 3000 PSI.

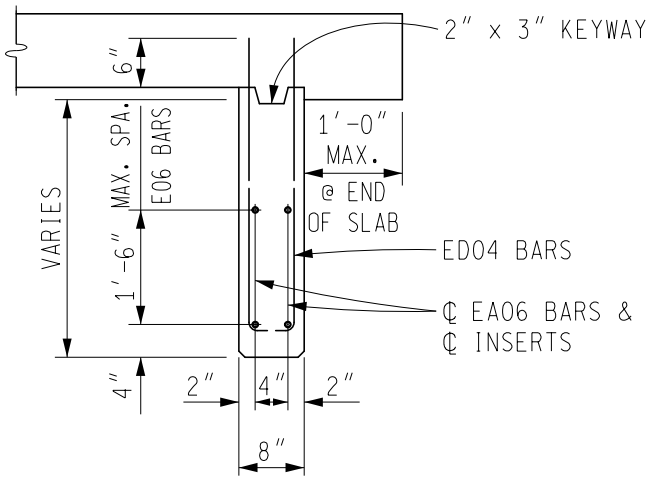

SECTION A-A

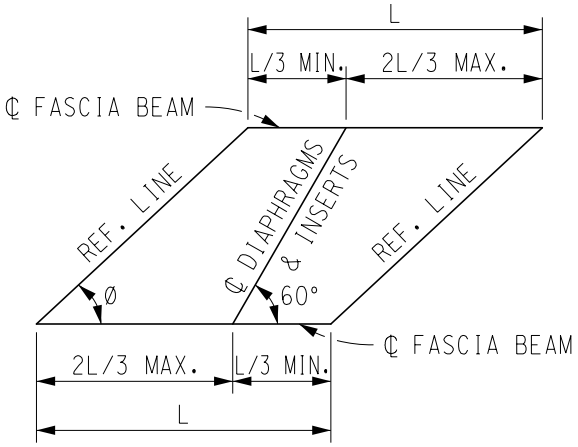

PLAN

PREPARED BY DESIGN DIVISION	6.60.12

DRAWN BY: BLT CHECKED BY: VZ APPROVED BY: DAJ	MICHIGAN DEPARTMENT OF TRANSPORTATION BUREAU OF HIGHWAY DEVELOPMENT PRESTRESSED CONCRETE 12″ & 17″ BOX BEAM PROPERTIES	ISSUED: 09/22/14 SUPERSEDES: 08/74

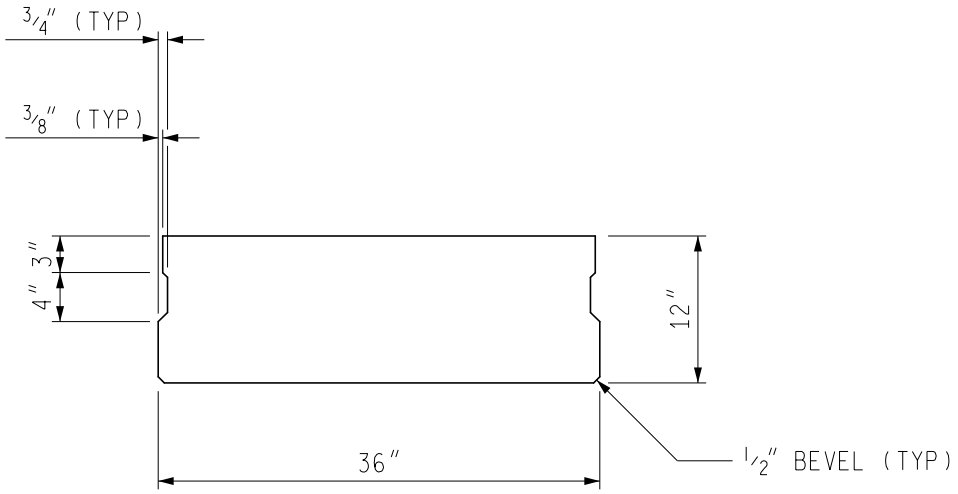

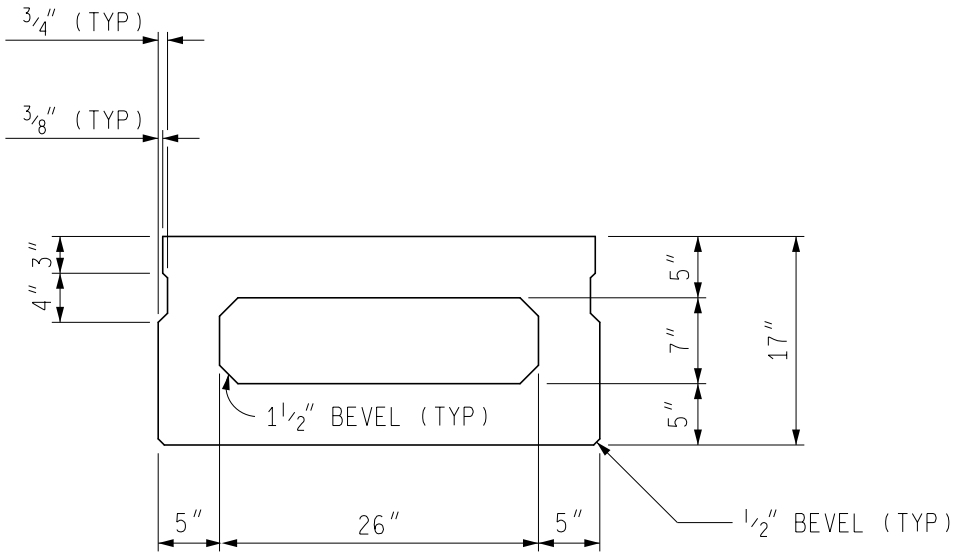

BEAM PROPERTIES								
DEPTH in	WIDTH in	WEIGHT lbs/ft	AREA in^2	Y_T in^3	Y_B in^3	S_T in^3	S_B in^3	I in^4
12	36	442	424	6.04	5.96	848	860	5,120
17	36	445	427	8.58	8.42	1610	1640	13,800

PREPARED BY DESIGN DIVISION	6.65.02

DRAWN BY: BLT CHECKED BY: VZ APPROVED BY: DAJ	MICHIGAN DEPARTMENT OF TRANSPORTATION BUREAU OF HIGHWAY DEVELOPMENT PRESTRESSED CONCRETE 21″ & 27″ BOX BEAM PROPERTIES	ISSUED: 09/22/14 SUPERSEDES: 08/74

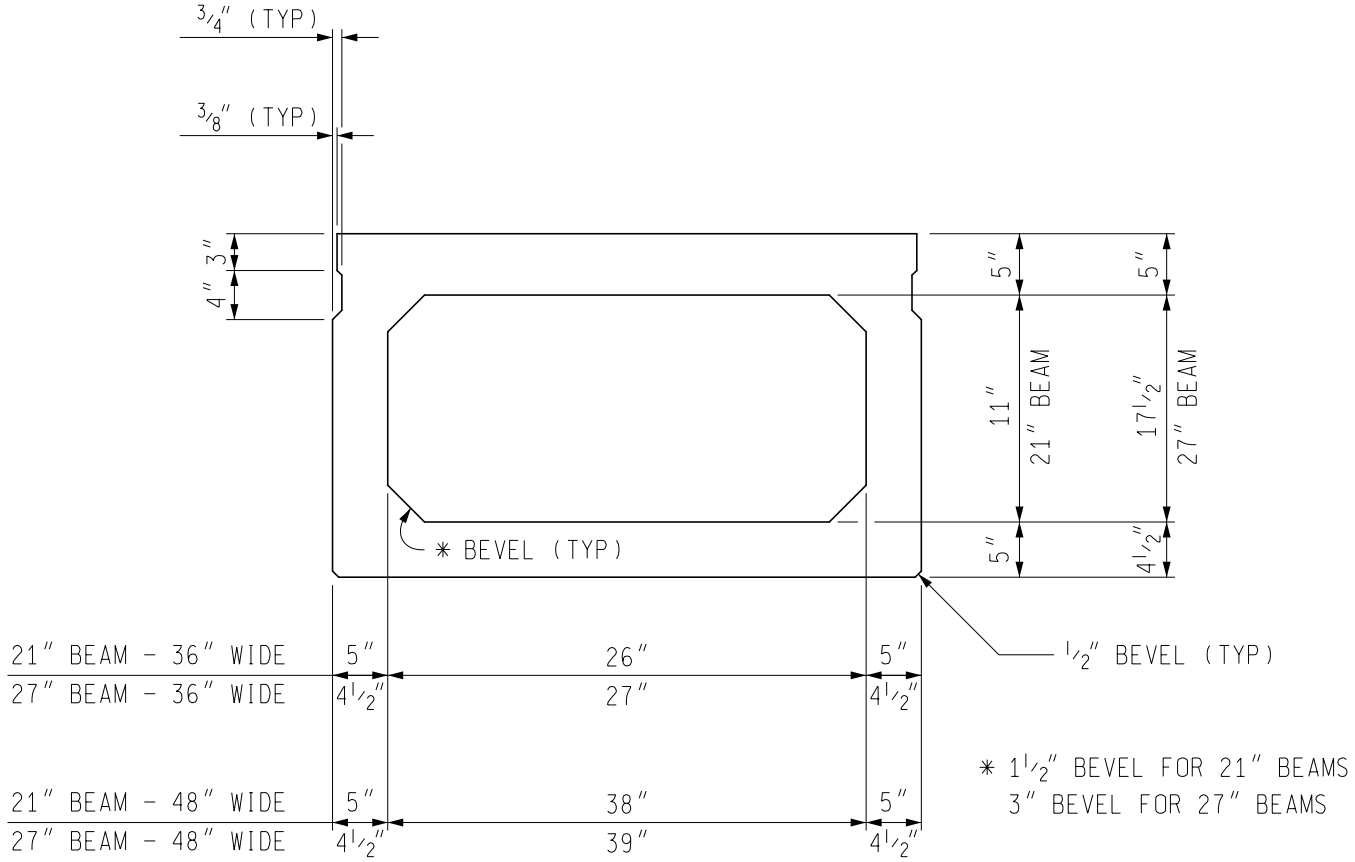

BEAM PROPERTIES								
DEPTH in	WIDTH in	WEIGHT lbs/ft	AREA in^2	Y_T in^3	Y_B in^3	S_T in^3	S_B in^3	I in^4
21	36	486	467	10.60	10.40	2320	2360	24,600
21	48	686	659	10.58	10.42	3260	3310	34,500
27	36	530	509	13.43	13.57	3520	3480	47,300
27	48	736	707	13.59	13.41	4970	5030	67,500

PREPARED BY DESIGN DIVISION	6.65.02A

DRAWN BY: BLT CHECKED BY: VZ APPROVED BY: DAJ	MICHIGAN DEPARTMENT OF TRANSPORTATION BUREAU OF HIGHWAY DEVELOPMENT PRESTRESSED CONCRETE 33", 39" & 42" BOX BEAM PROPERTIES	ISSUED: 09/22/14 SUPERSEDES: 08/74

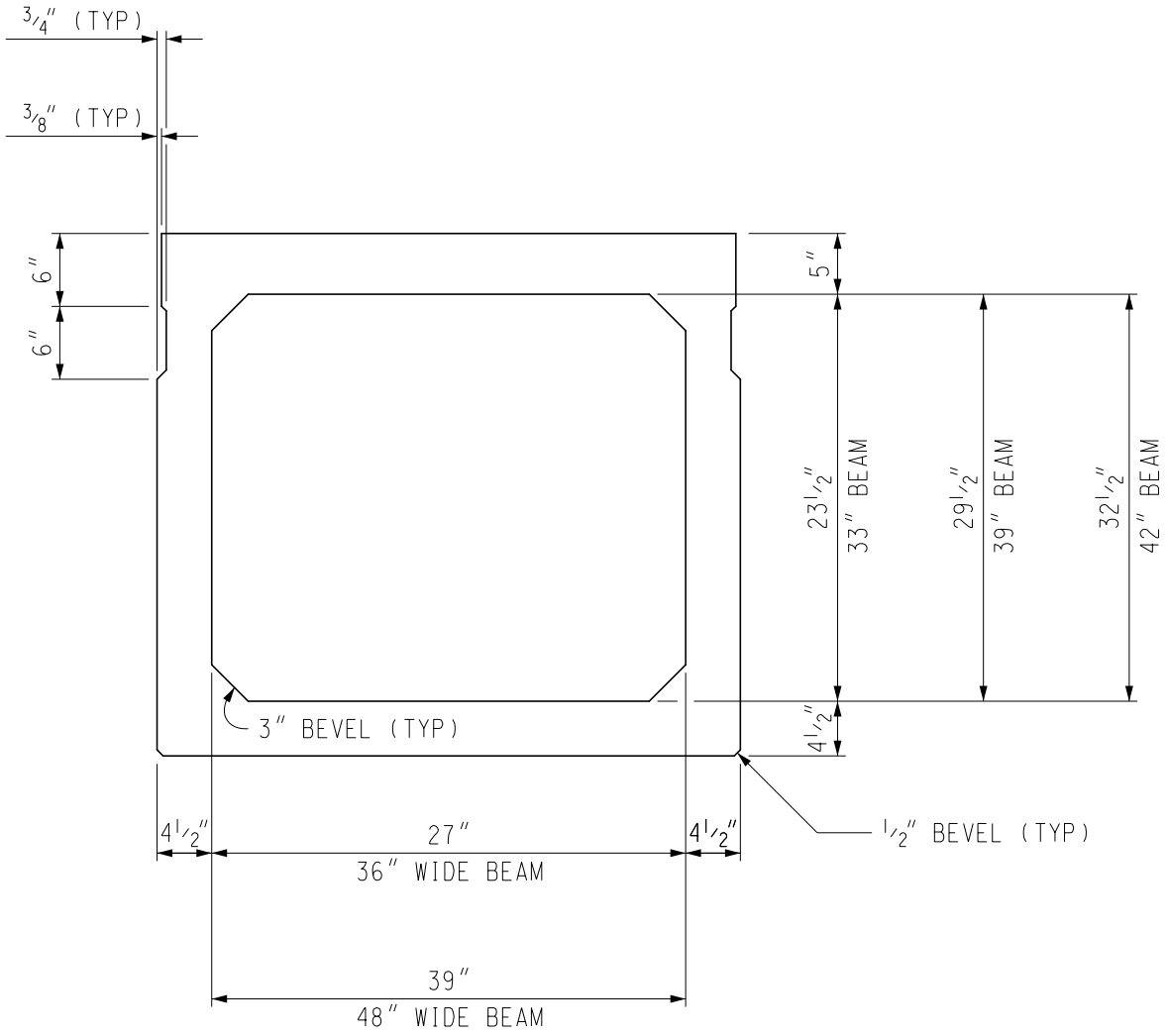

BEAM PROPERTIES								
DEPTH in	WIDTH in	WEIGHT lbs/ft	AREA in^2	Y_T in^3	Y_B in^3	S_T in^3	S_B in^3	I in^4
33	36	581	558	16.45	16.55	4820	4790	79,300
33	48	786	755	16.66	16.34	6790	6930	113,200
39	36	638	613	19.45	19.55	6240	6210	121,400
39	48	836	803	19.64	19.36	8780	8910	172,500
42	36	666	640	20.95	21.05	6990	6960	146,500
42	48	861	827	21.15	20.85	9830	9970	208,000

DRAWN BY: BLT CHECKED BY: VZ APPROVED BY: DAJ	MICHIGAN DEPARTMENT OF TRANSPORTATION BUREAU OF HIGHWAY DEVELOPMENT STANDARD REINFORCING BAR TYPES	ISSUED: 09/22/14 SUPERSEDES: 11/27/01

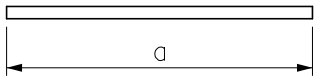

L = a

A

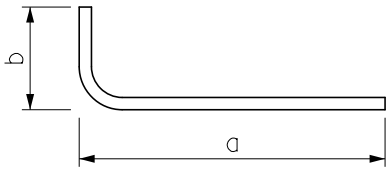

L = a + b

B

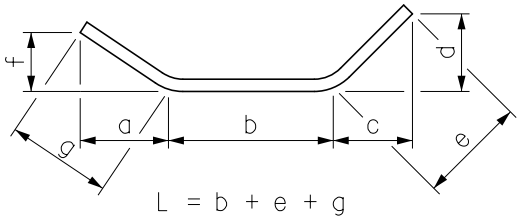

L = b + e + g

C

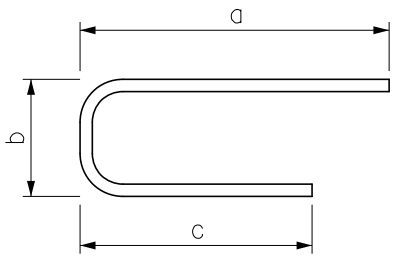

L = a + b + c

D

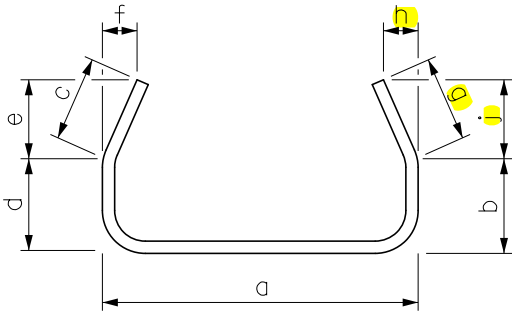

L = a + b + c + d + g

F

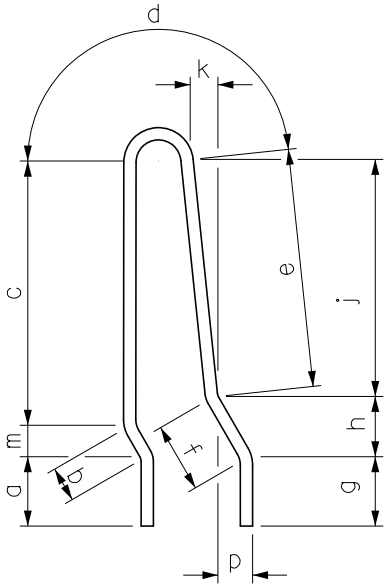

L = a + b + c + d + e + f + g

G

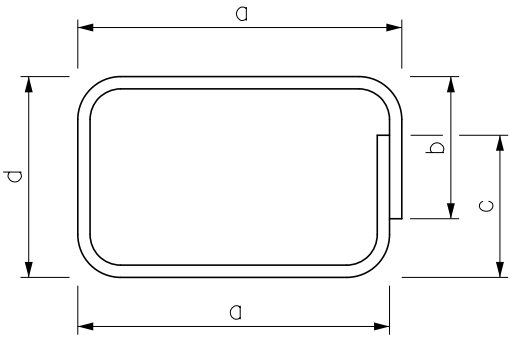

L = 2a + b + c + d

K

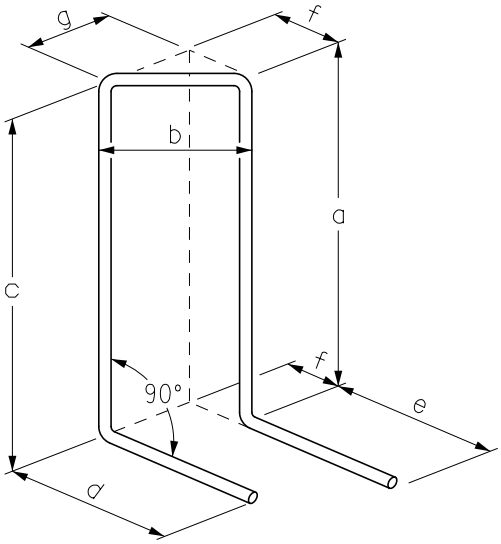

L = a + b + c + d + e

L

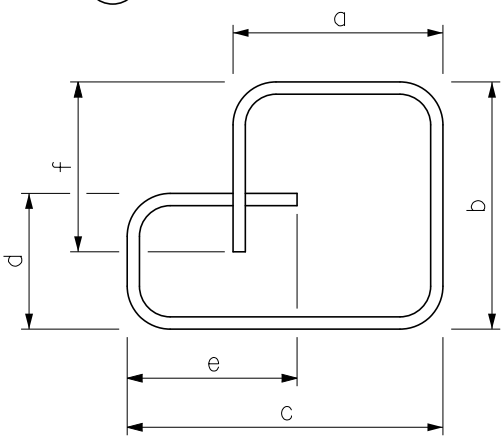

L = a + b + c + d + e + f

M

PREPARED BY DESIGN DIVISION	7.15.01