Road & Bridge Design Publications

Monthly Update – June 2015

Revisions for the month of **June** are listed and displayed below. New special details will be included in projects submitted for the **September** letting as is stated on the special detail index sheets. E-mail questions related to the road changes to MDOT-Road-Design-Standards@michigan.gov. E-mail Bridge related questions to MDOT-Bridge-Design-Standards@michigan.gov.

Special Details

R-1-G: Drainage Structures: Revised a few of the values in the Table of Dimensions on sheet four to match the corresponding values in the Flat Slab Top Dimensions Table on sheet five.

Road Design Manual

3.04.02: Superelevation Transitions: Revised the tolerances on the location of the superelevation transitions to a minimum of 30% & a maximum of 40% located inside the curve.

3.12: Under Clearances: Revised table entries that read "Maintain Existing 14'-6" Min*" to "Maintain Existing** and 14'-6" Min", where the new double asterisk denotes, "Existing vertical clearances greater than or equal to the minimums shown may be retained without a design exception. Vertical clearance reductions that fall below the minimums for new construction require a design exception." In the 3R Construction column, the same revision (using 14' minimum) was made to the lines in the chart which had initial values of 14'-0".

6.03.09: HMA Mix Selection Guidelines: The bottom two rows (GGSP (½" Nom Max) & ASCL) were added to the Mix Number and Thickness Guidelines Table. The former row GGSP was revised to GGSP (3/8" Nom Max), with the max application rate being revised to 225 lbs/syd. A sentence regarding ASCRL was added to note #1. Notes were added to the Asphalt Binder Usage Table (Guidelines by Region). A note was removed (and the numbering revised) from the Non-mainline Paving Table (Table 2).

14.17: FAA Obstruction Evaluation: This is a new section which was added to alert designers of the federal regulation which requires the FAA be notified when construction, alteration, or activity is planned in a zone that may impact aircraft flight operations.

Road & Bridge Design Publications

Monthly Update – June 2015

14.27: Value Engineering: This section was updated and rewritten. Major changes include:

1) A revised definition of Value Engineering (VE).
2) Corrections and clarifications on MDOT's VE Study Cost Threshold, including a criteria of determination of benefit below the threshold amount.
3) Exemptions for VE studies on a project by project basis for Road projects with total costs between $25 million & $50 million and stand-alone bridge projects between $20 million & $40 million if EOC approval is granted. (Policy Revision)
4) The use of Value Engineering Change Proposals (VECPs) in all projects except CMGC and DB. (Policy Revision)
5) Federal VE thresholds (for total project costs) increased to $50 million or greater for road projects and $40 million or greater for bridge projects. (Policy Revision)

14.31.01: Environmental Classification (PPMS Task 3150): Revised section consistent with the most recent FHWA/MDOT Stewardship agreement.

Bridge Design Manual

7.01.08 (LFD & LRFD): Revised table entries that read "Maintain Existing 14'-6" Min*" to "Maintain Existing** and 14'-6" Min", where the new double asterisk denotes, "Existing vertical clearances greater than or equal to the minimums shown may be retained without a design exception. Vertical clearance reductions that fall below the minimums for new construction require a design exception." In the 3R Construction column, the same revision (using 14' minimum) was made to the lines in the chart which had initial values of 14'-0". Minor layout updates within the section.

Updates to MDOT Cell Library, Bridge Auto Draw Program, etc., may be required in tandem with some of this month's updates. Until such updates to automated tools can be made, it is the designer's/detailer's responsibility to manually incorporate any necessary revisions to notes and plan details to reflect these revisions.

Index to Special Details

6-22-2015

⑥

SPECIAL DETAIL NUMBER	NUMBER OF SHEETS	TITLE	CURRENT DATE
21	2	GUARDRAIL AT INTERSECTIONS	5-24-01
24	5	GUARDRAIL ANCHORED IN BACK SLOPE TYPES 4B & 4T	7-22-02
99	2	CHAIN LINK FENCE WITH WIRE ROPE	9-22-14
*R-1-G	9	DRAINAGE STRUCTURES	6-11-15
R-62-H	5	GUARDRAIL APPROACH TERMINAL TYPES 2B & 2T (SKT)	10-28-14
R-126-I	5	PLACEMENT OF TEMPORARY BARRIER	3-26-12

*** Denotes New or Revised Special Detail to be included in projects for (beginning with) the September letting.**

Note: Former Standard Plans IV-87, IV-89, IV-90, and IV-91 Series, used for building cast-in-place concrete head walls for elliptical and circular pipe culverts, are now being replaced with plans that detail each specific size. The Municipal Utilities Unit will provide these full sized special details for inclusion in construction plans for MDOT jobs. To assure prompt delivery, requests ***must*** be made in advance.

Former Standard Plans IV-93 and IV-94 series have been replaced with precast concrete box & three-sided culverts as per the 2012 Standard Specifications for Construction.

Index to Bridge Detail Sheets

6-22-2015

⑦

DETAIL NUMBER	NUMBER OF SHEETS	TITLE	CURRENT DATE
EJ3AA	1 or 2	EXPANSION JOINT DETAILS	6-16-14
EJ4N	1 or 2	EXPANSION JOINT DETAILS	6-16-14
PC-2G	1	70" PRESTRESSED CONCRETE I-BEAM DETAILS	3-31-06
PC-4E	1	PRESTRESSED CONCRETE 1800 BEAM DETAILS	3-31-06
PC-1L	1	PRESTRESSED CONCRETE I-BEAM DETAILS	7-12-06

*** Denotes New or Revised Special Detail to be included in projects for (beginning with) the September letting.**

Note: Details EJ3AA & EJ4N are interactive, i.e. designers and detailers choose details based upon railing type and angle of crossing. Place all details appropriate for the project, structure specific information, and the Expansion Joint Device quantity on the sheet. The sheet shall then be added to the plans as a normal plan sheet.

Detail PC-1L, PC-2G and PC-4E shall have structure specific information and quantities added to the sheet. The sheet shall then be added to the plans as a normal plan sheet.

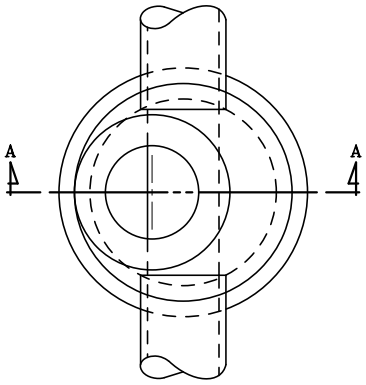

PLAN VIEW

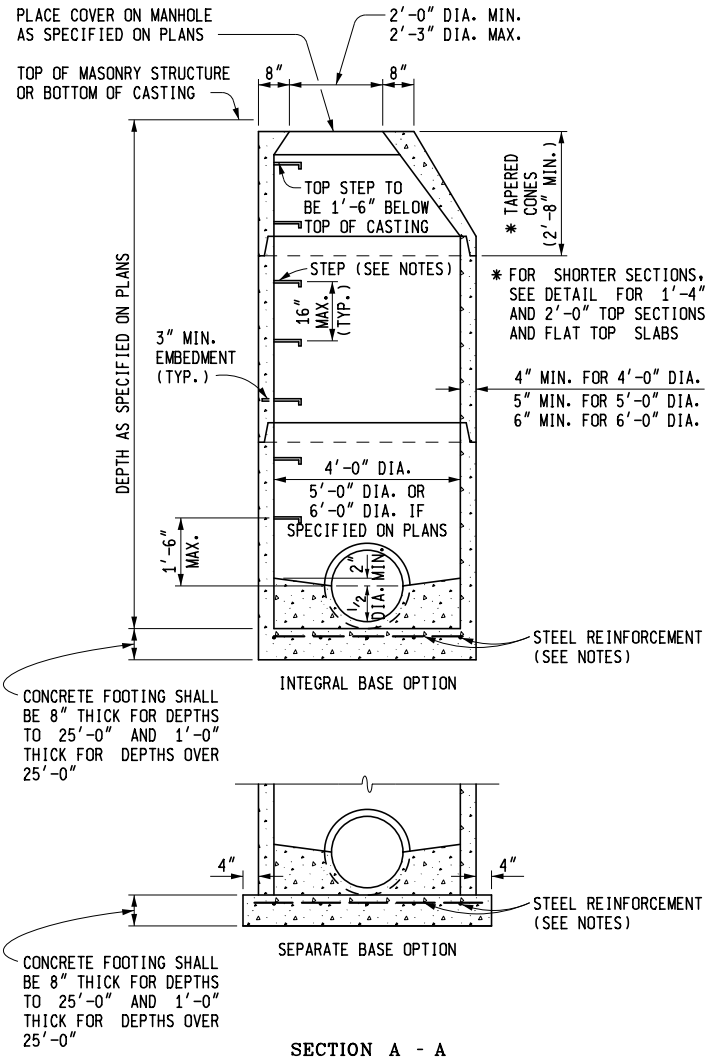

SECTION A - A

TYPICAL MANHOLE

PRECAST REINFORCED CONCRETE SHOWN
OTHER OPTIONS INCLUDE CONCRETE BLOCK, BRICK, OR CAST-IN-PLACE WALL SECTIONS
SEE TYPICAL WALL SECTIONS FOR WALL THICKNESS

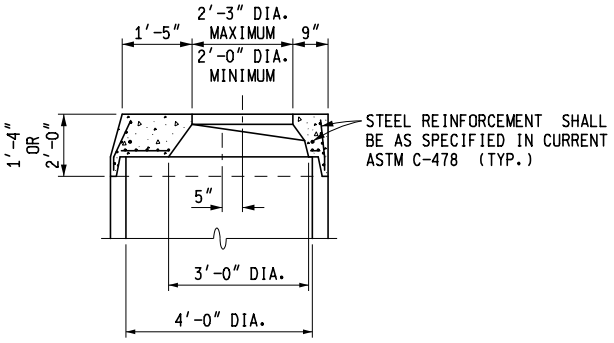

DETAIL FOR 1'-4" & 2'-0" TOP SECTIONS

SHAPE MAY VARY FROM DETAIL SHOWN BUT MUST COMPLY WITH ASTM C-478 AND JOINTS SHALL BE COMPATIBLE WITH THE RISER

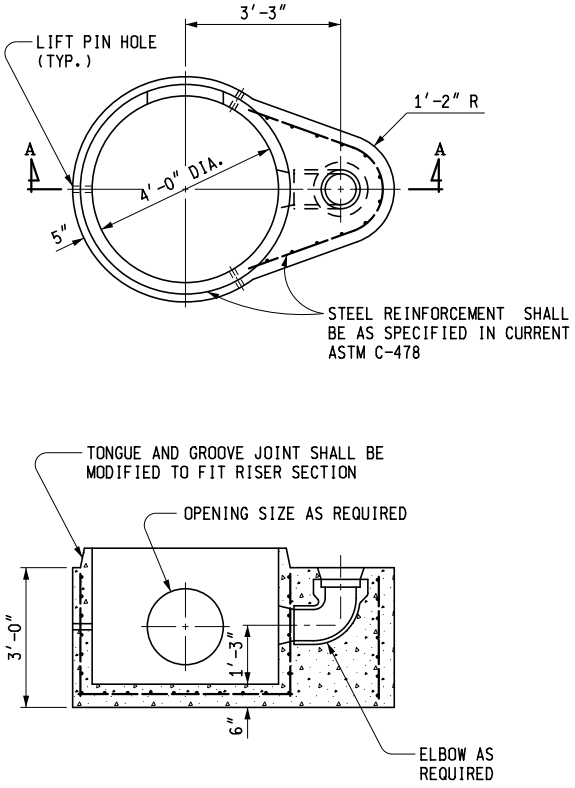

SECTION A - A

TYPICAL PRECAST REINFORCED BOTTOM SECTION FOR DROP MANHOLE

MDOT Michigan Department of Transportation

PREPARED BY DESIGN DIVISION

DRAWN BY: B.L.T.

CHECKED BY: W.K.P.

DEPARTMENT DIRECTOR
Kirk T. Steudle

APPROVED BY: _____
DIRECTOR, BUREAU OF FIELD SERVICES

APPROVED BY: _____
DIRECTOR, BUREAU OF HIGHWAY DEVELOPMENT

MICHIGAN DEPARTMENT OF TRANSPORTATION
BUREAU OF HIGHWAY DEVELOPMENT STANDARD PLAN FOR

DRAINAGE STRUCTURES

F.H.W.A. APPROVAL	6-11-2015 PLAN DATE	R-1-G	SHEET 1 OF 9

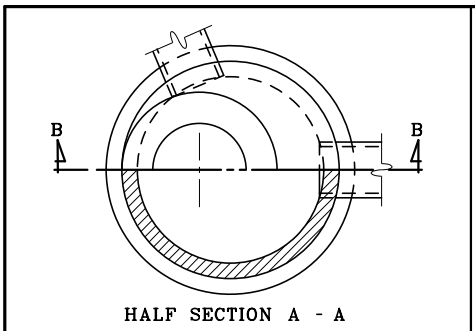

SEE MANHOLE DETAILS FOR SIZE AND BASE OPTIONS

SECTION B - B

INLET

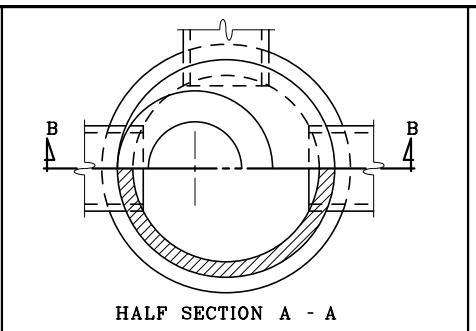

SEE MANHOLE DETAILS FOR SIZE AND BASE OPTIONS

SECTION B - B

CATCH BASIN

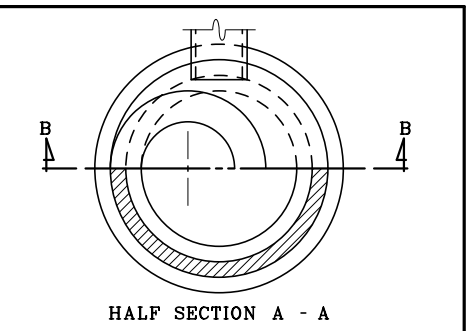

SEE MANHOLE DETAILS FOR BASE OPTIONS

SECTION B - B

LEACHING BASIN

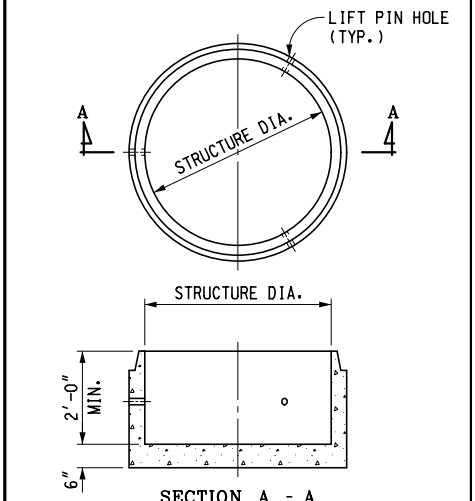

SECTION A - A

SEE MANHOLE DETAILS FOR SIZE AND BASE OPTIONS

PRECAST SUMP FOR PRECAST RISERS

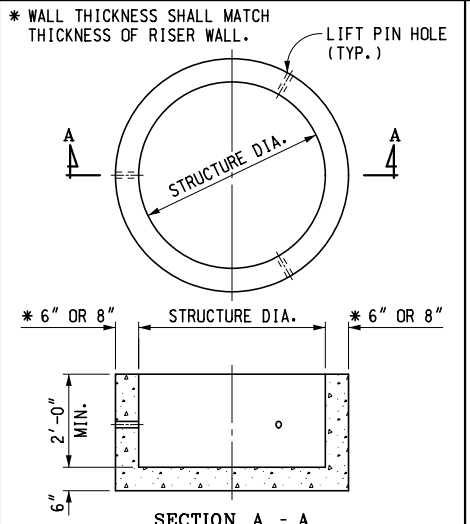

SECTION A - A

SEE TYPICAL BRICK AND BLOCK SECTION FOR SIZE AND BASE OPTIONS

PRECAST SUMP FOR BRICK OR BLOCK CONSTRUCTION

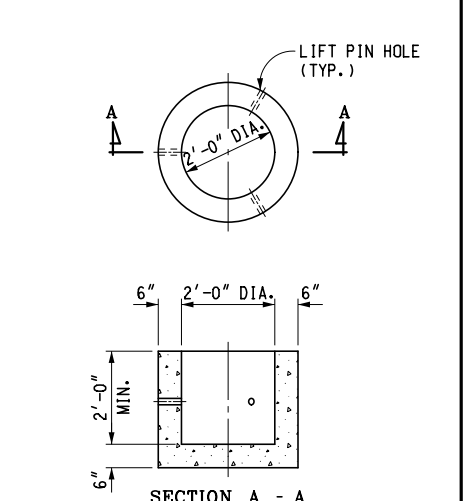

SECTION A - A

PRECAST SUMP FOR 2'-0" DIA. STRUCTURES

MICHIGAN DEPARTMENT OF TRANSPORTATION

BUREAU OF HIGHWAY DEVELOPMENT STANDARD PLAN FOR

DRAINAGE STRUCTURES

F.H.W.A. APPROVAL	6-11-2015 PLAN DATE	R-1-G	SHEET 2 OF 9

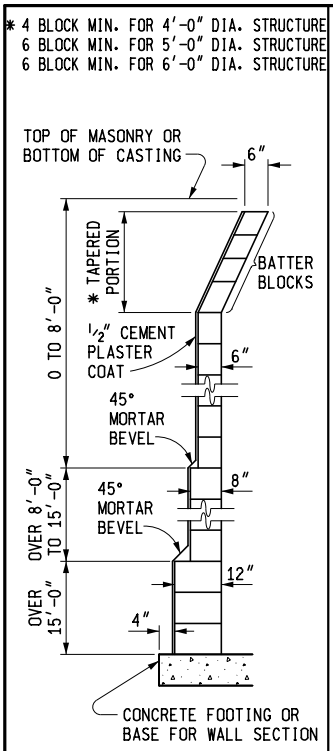

TYPICAL CONCRETE BLOCK WALL SECTION

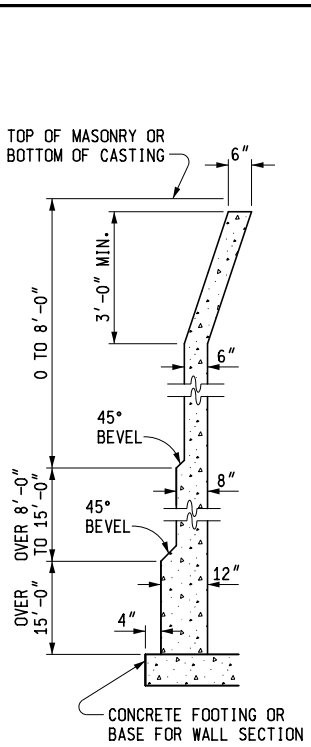

TYPICAL CAST-IN-PLACE CONCRETE WALL SECTION

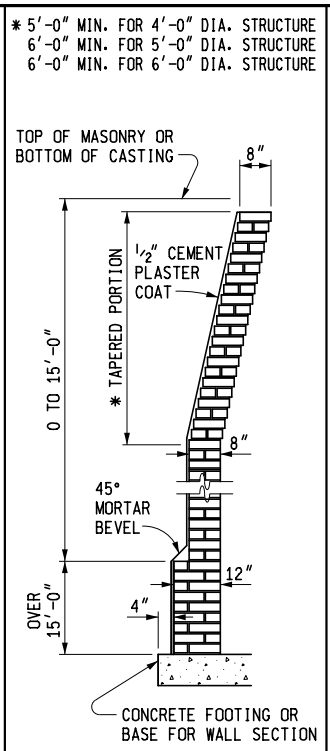

TYPICAL BRICK WALL SECTION

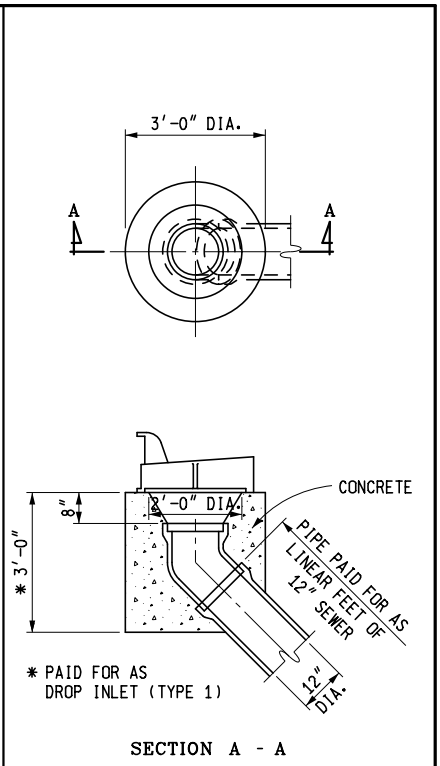

DROP INLET (TYPE 1)

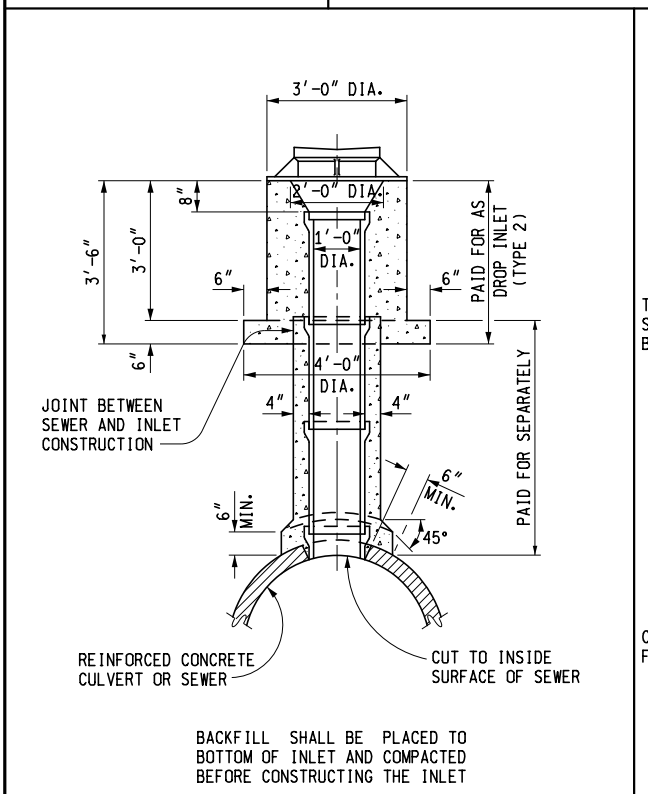

DROP INLET (TYPE 2)

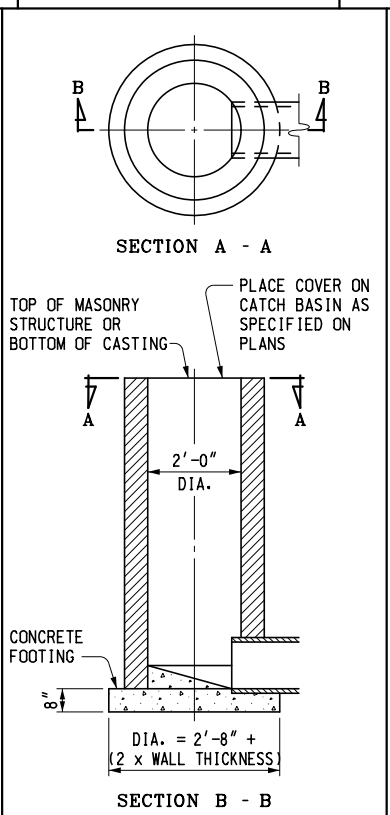

INLET

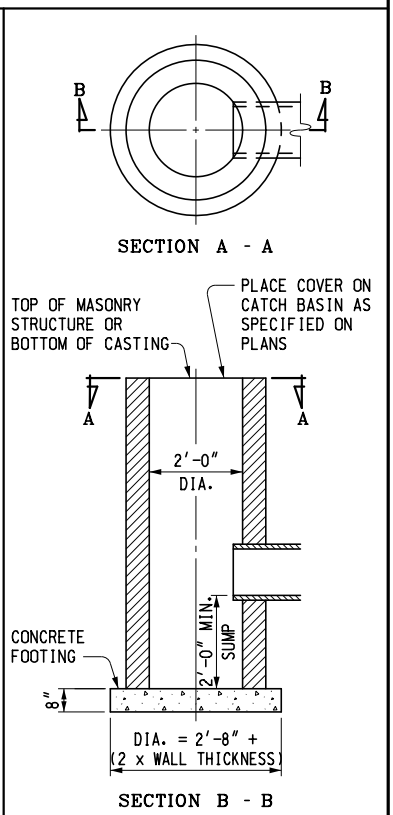

CATCH BASIN

MICHIGAN DEPARTMENT OF TRANSPORTATION
BUREAU OF HIGHWAY DEVELOPMENT STANDARD PLAN FOR

DRAINAGE STRUCTURES

F.H.W.A. APPROVAL	6-11-2015 PLAN DATE	R-1-G	SHEET 3 OF 9

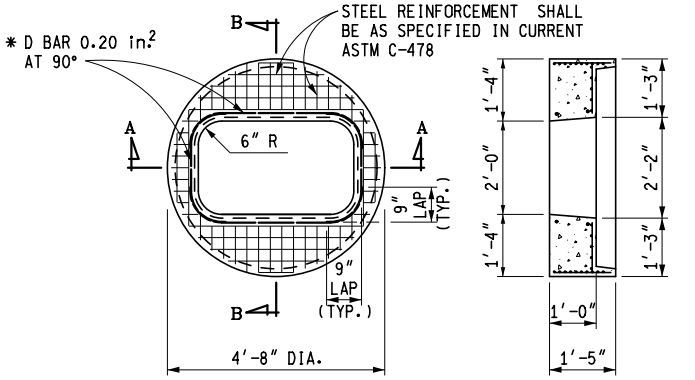

SECTION B - B

* D BARS MAY BE BENT AT A SMALLER RADIUS RATHER THAN PARALLELING THE RADIUS IN THE DRAIN OPENING

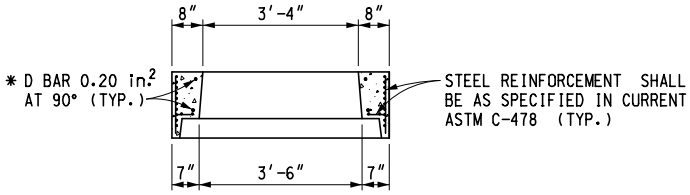

SECTION A - A

PRECAST FLAT SLAB TOP FOR PRECAST CONCRETE STRUCTURE, 2' x 4' CASTING

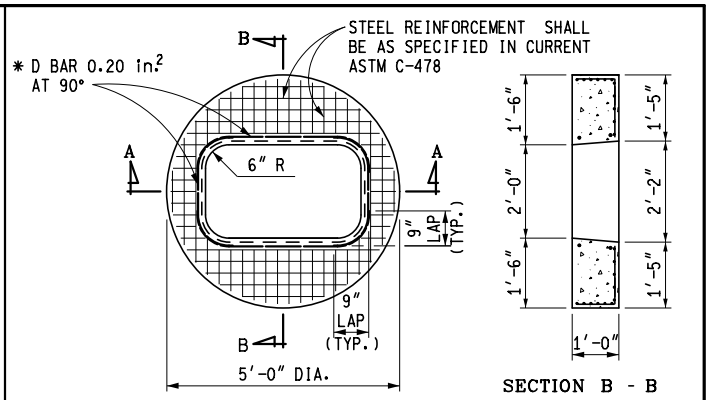

SECTION B - B

* D BARS MAY BE BENT AT A SMALLER RADIUS RATHER THAN PARALLELING THE RADIUS IN THE DRAIN OPENING

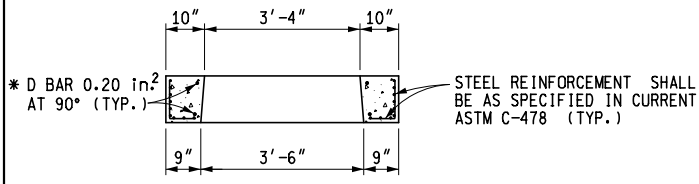

SECTION A - A

PRECAST FLAT SLAB TOP FOR MASONRY STRUCTURE, 2' x 4' CASTING

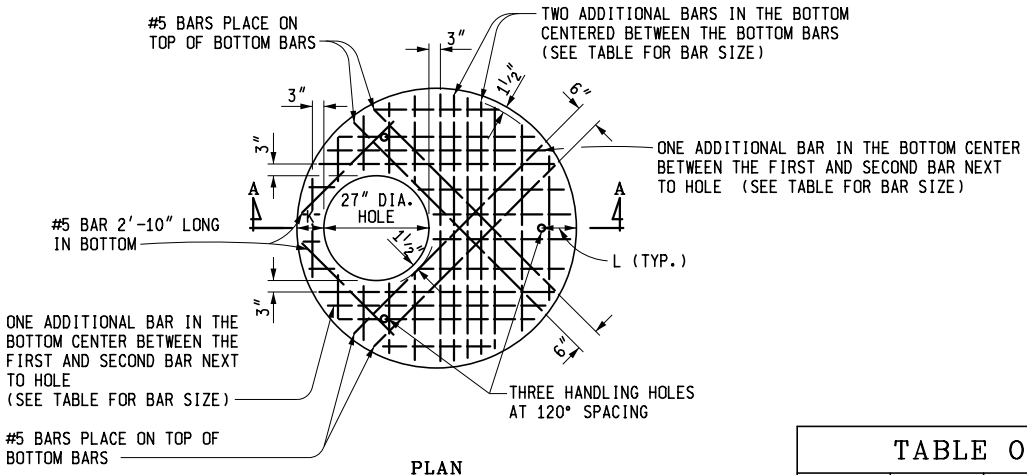

PLAN
(SHOWING BOTTOM LAYER OF REINFORCEMENT)

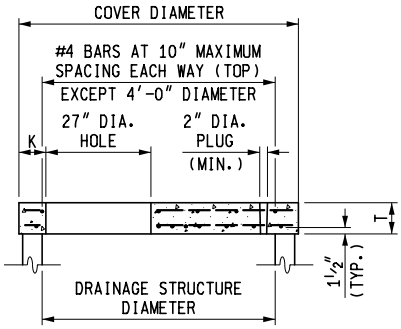

SECTION A - A

TABLE OF DIMENSIONS					
STRUCTURE DIAMETER	COVER DIAMETER	T	K	L	BAR MAXIMUM SPACING (BOTTOM EACH WAY)
* 4'-0"	58"	6"	6"	8"	#5 AT 6"
5'-0"	72"	8"	7"	9"	#5 AT 7"
6'-0"	86"	8"	8"	10"	#5 AT 6"
7'-0"	101½"	12"	8¾"	11"	#5 AT 5"
8'-0"	114"	12"	9"	11"	#6 AT 6"
9'-0"	128"	12"	10"	12"	#5 AT 6"
10'-0"	140"	12"	10"	13"	#5 AT 6"

* ONLY BOTTOM LAYERS OF STEEL NECESSARY

PRECAST REINFORCED CONCRETE FLAT SLAB TOP

MICHIGAN DEPARTMENT OF TRANSPORTATION
BUREAU OF HIGHWAY DEVELOPMENT STANDARD PLAN FOR

DRAINAGE STRUCTURES

F.H.W.A. APPROVAL	6-11-2015 PLAN DATE	R-1-G	SHEET 4 OF 9

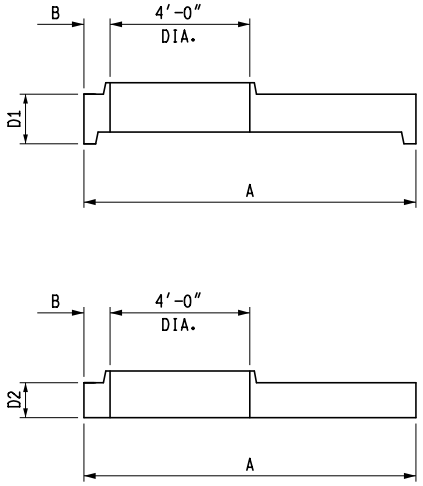

PRECAST REDUCER CAP

REDUCER CAP DIMENSIONS				
STRUCTURE DIAMETER	CAP DIAMETER "A"	B	CAP DEPTH "D1"	CAP DEPTH "D2"
7′-0″	101½″	8¾″	1′-5″	12″
8′-0″	114″	9″	1′-5″	12″
9′-0″	128″	10″	1′-5″	12″
10′-0″	140″	10″	1′-6″	12″

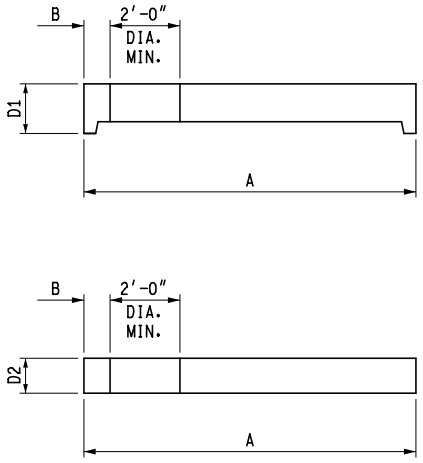

PRECAST FLAT SLAB TOP

FLAT SLAB TOP DIMENSIONS				
STRUCTURE DIAMETER	COVER DIAMETER "A"	B	COVER DEPTH "D1"	COVER DEPTH "D2"
7′-0″	101½″	8¾″	1′-5″	12″
8′-0″	114″	9″	1′-5″	12″
9′-0″	128″	10″	1′-5″	12″
10′-0″	140″	10″	1′-6″	12″

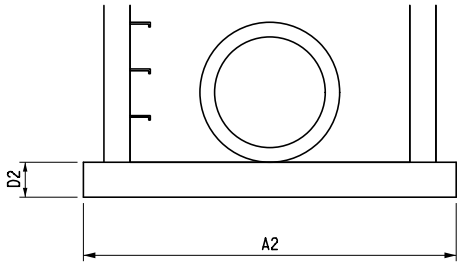

SEPARATE BASE OPTION

BASE AND RISER DIMENSIONS					
STRUCTURE DIAMETER	BASE DIAMETER "A1"	BASE DIAMETER "A2"	MIN. WALL THICKNESS "T"	BASE DEPTH "D1"	BASE DEPTH "D2"
7′-0″	101½″	108″	7″	8″	12″
8′-0″	114″	128″	8″	8″	12″
9′-0″	128″	140″	9″	8″	12″
10′-0″	140″	154″	10″	8″	12″

MICHIGAN DEPARTMENT OF TRANSPORTATION
BUREAU OF HIGHWAY DEVELOPMENT STANDARD PLAN FOR

DRAINAGE STRUCTURES

F.H.W.A. APPROVAL	PLAN DATE	R-1-G	SHEET 5 OF 9

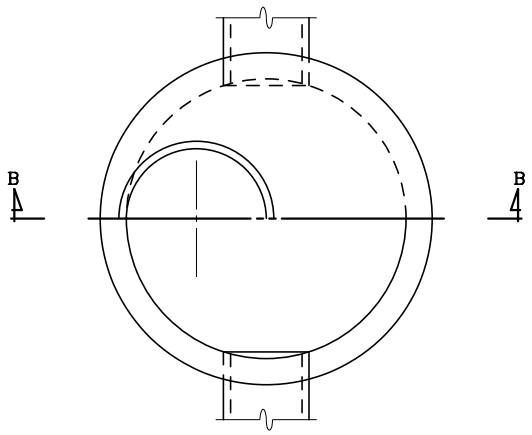

HALF SECTION A - A

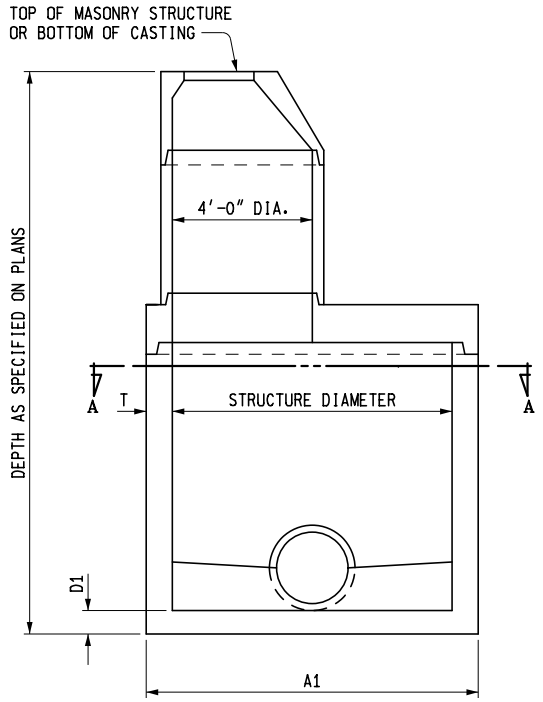

SECTION B - B
SHOWING REDUCER CAP

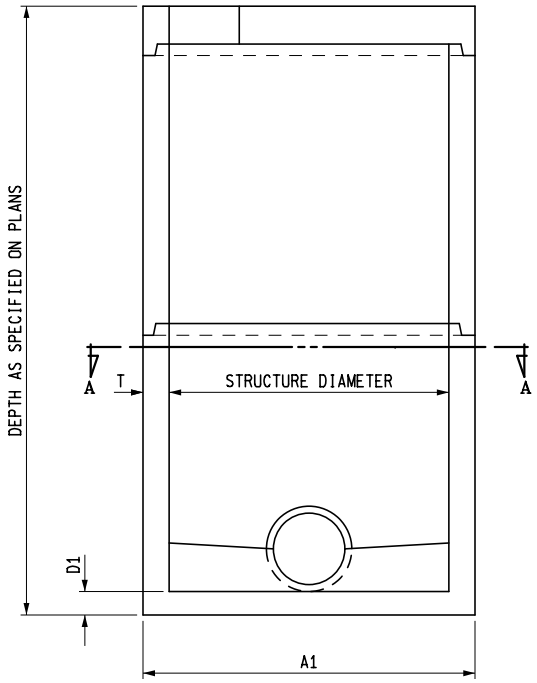

SECTION B - B
SHOWING FLAT SLAB TOP

PRECAST MANHOLE

MICHIGAN DEPARTMENT OF TRANSPORTATION
BUREAU OF HIGHWAY DEVELOPMENT STANDARD PLAN FOR

DRAINAGE STRUCTURES

F.H.W.A. APPROVAL	6-11-2015 PLAN DATE	R-1-G	SHEET 6 OF 9

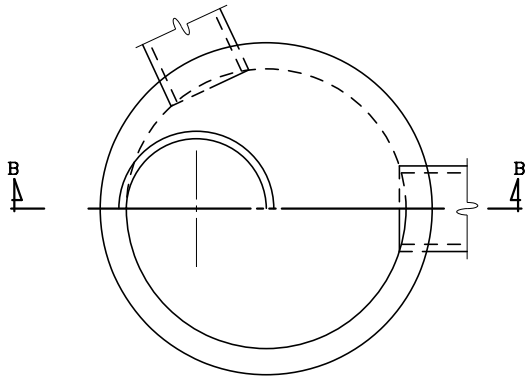

HALF SECTION A - A

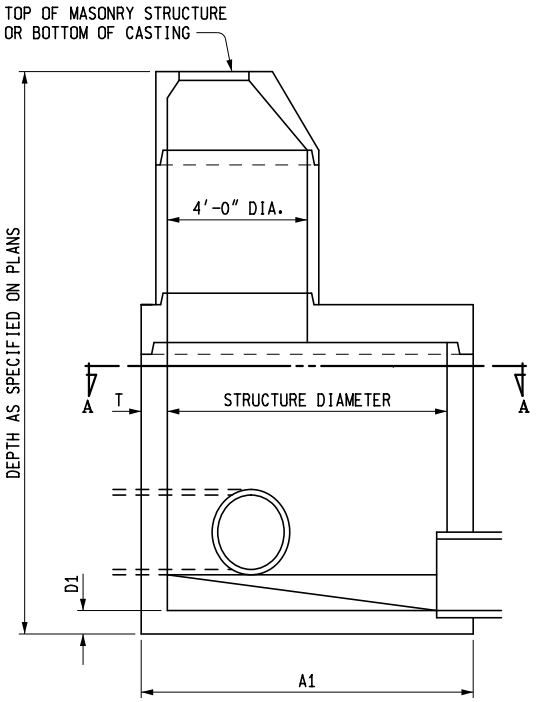

SECTION B - B
SHOWING REDUCER CAP

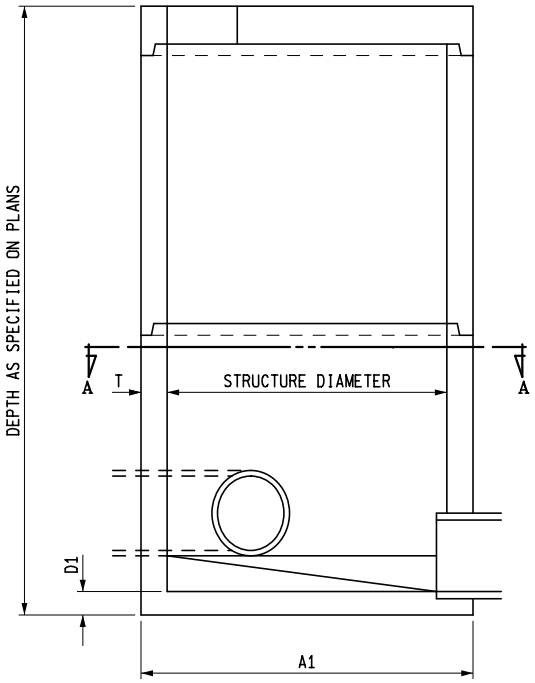

SECTION B - B
SHOWING FLAT SLAB TOP

PRECAST INLET

MICHIGAN DEPARTMENT OF TRANSPORTATION
BUREAU OF HIGHWAY DEVELOPMENT STANDARD PLAN FOR

DRAINAGE STRUCTURES

F.H.W.A. APPROVAL	6-11-2015 PLAN DATE	R-1-G	SHEET 7 OF 9

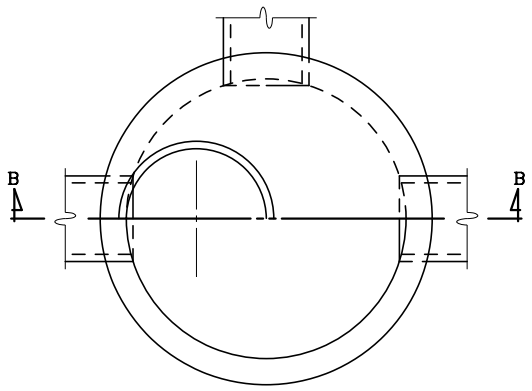

HALF SECTION A - A

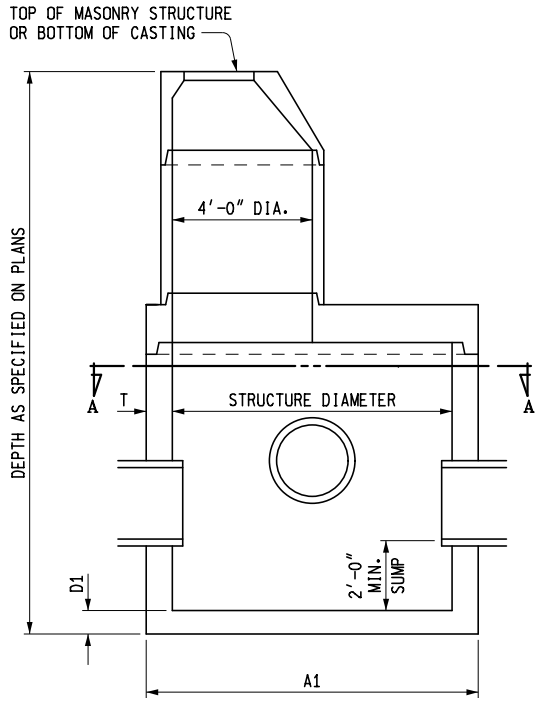

SECTION B - B
SHOWING REDUCER CAP

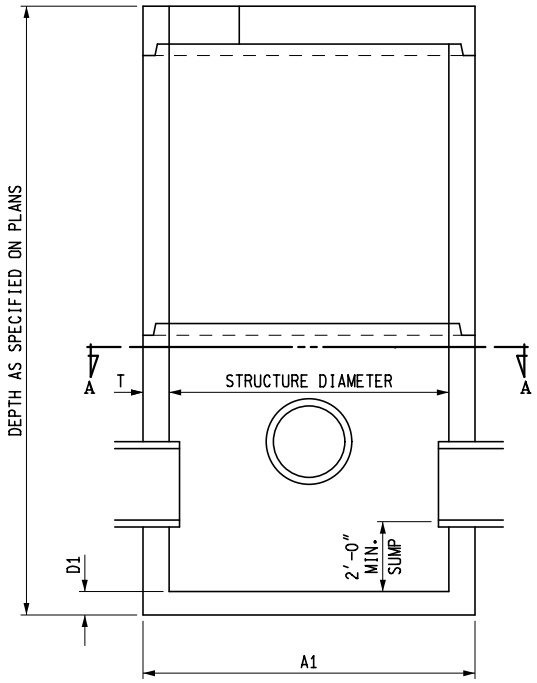

SECTION B - B
SHOWING FLAT SLAB TOP

PRECAST CATCH BASIN

MICHIGAN DEPARTMENT OF TRANSPORTATION
BUREAU OF HIGHWAY DEVELOPMENT STANDARD PLAN FOR

DRAINAGE STRUCTURES

F.H.W.A. APPROVAL	6-11-2015 PLAN DATE	R-1-G	SHEET 8 OF 9

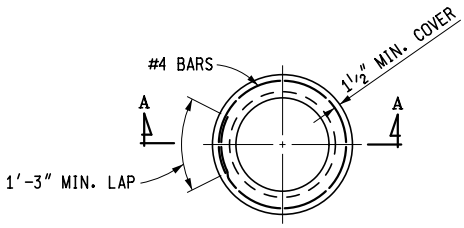

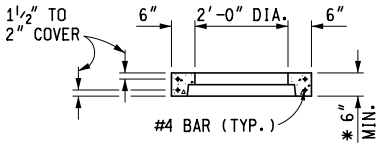

SECTION A - A

* WHEN RISER TONGUE LENGTH IS GREATER THAN 3", USE 2 TIMES THE TONGUE LENGTH.

NOTE: PRECAST RISER SHALL FULLY ENGAGE THE TONGUE OF THE RISER PIPE.

PRECAST RISER RING

(FOR 2'-0" DIAMETER STRUCTURE)

NOTES:

THE DRAINAGE STRUCTURE COVERS ALLOWED FOR USE ON THESE DRAINAGE STRUCTURES ARE SPECIFIED IN SUBSEQUENT STANDARD PLANS AND ARE INTERCHANGEABLE ON ANY STRUCTURE.

THE TOPS OF MASONRY STRUCTURES SHALL BE SUFFICIENTLY LOW TO PERMIT PROPER ADJUSTMENT OF COVER TO GRADE USING MORTAR OR BRICK AS DIRECTED BY THE ENGINEER.

PREMIUM JOINTS ARE REQUIRED ON ALL SANITARY MANHOLES. SEE ASTM DESIGNATION C-923.

GRANULAR MATERIAL CLASS III SHALL BE USED IN BACKFILLING AROUND ALL STRUCTURES THAT FALL WITHIN THE 1:1 INFLUENCE LINES FROM THE EDGE OF PAVEMENT OR BACK OF CURB.

STEPS FOR DRAINAGE STRUCTURES SHALL BE OF AN APPROVED DESIGN AND MADE FROM CAST IRON, ALUMINUM, OR PLASTIC COATED STEEL. RUNGS SHALL BE A MINIMUM OF 10" IN CLEAR LENGTH, DESIGNED TO PREVENT THE FOOT FROM SLIPPING OFF THE END. THE MINIMUM HORIZONTAL PULL OUT LOAD SHALL BE 400 LBS. THE MINIMUM VERTICAL LOAD SHALL BE 800 LBS.

THE BELL SHALL BE REMOVED FOR THE FIRST LENGTH OF OUTLET PIPE PROJECTING THROUGH THE WALL OF THE MANHOLE.

PRECAST CONCRETE SECTIONS, SUMPS, AND FLAT TOP SLABS SHALL BE BUILT ACCORDING TO CURRENT ASTM C-478 AND ACCORDING TO DETAILS SPECIFIED ON THIS PLAN. PRECAST REINFORCED CONCRETE FLAT TOP SLAB SHALL BE MARKED TO SHOW LOCATION OF REINFORCEMENT. THE WALLS OF THE PRECAST UNITS MAY HAVE A SLIGHT TAPER TO ALLOW FOR FORM REMOVAL. PRECAST CONCRETE 2'-0" DIAMETER DRAINAGE STRUCTURES SHALL HAVE A MINIMUM 3" WALL THICKNESS WITH A 6" MINIMUM BEARING SURFACE ON TOP. SEE PRECAST RISER RING FOR 2'-0" DIAMETER STRUCTURE.

THE INSIDE DIAMETER OF PIPES ENTERING OR LEAVING PRECAST DRAINAGE STRUCTURES SHALL BE LESS THAN THE INSIDE DIAMETER OF THE DRAINAGE STRUCTURE MINUS 2'-0". A PIPE LEAVING A 2'-0" DIAMETER DRAINAGE STRUCTURE IS ALLOWED TO HAVE 1'-0" INSIDE DIAMETER OR LESS.

THE NUMBER OF PIPE OPENINGS IN A RISER SHALL BE DETERMINED BY THE DESIGNER. SPACING BETWEEN OPENINGS SHALL BE 1'-0" MINIMUM. OPENINGS MAY BE CONSTRUCTED BY CASTING OR BY DRILLING THE CURED CONCRETE.

PRECAST CONCRETE FOOTINGS OR BASES SHALL BE REINFORCED WITH #4 BARS SPACED AT 1'-0" BOTH WAYS OR WITH TWO LAYERS OF WELDED WIRE FABRIC OF EQUIVALENT CROSS SECTIONAL AREA LAID AT RIGHT ANGLES AND WIRED TOGETHER. REINFORCEMENT SHALL BE PLACED IN TOP OF FOOTING AND SHALL BE MARKED.

PRECAST CONCRETE FOOTINGS SHALL BE SUPPORTED BY A COMPACTED 6" GRANULAR SUBBASE.

THE MINIMUM WALL THICKNESS FOR ALL 2'-0", 4'-0", 5'-0", AND 6'-0" DRAINAGE STRUCTURES USING CONCRETE BLOCK, BRICK, OR CAST-IN-PLACE CONCRETE SHALL BE AS SPECIFIED IN TYPICAL WALL SECTIONS.

THE CONICAL SECTION OF MANHOLES OR CATCH BASINS CONSTRUCTED OF BLOCK OR BRICK SHALL BE SHROUDED WITH GEOTEXTILE FABRIC TO A MINIMUM DEPTH OF 5'-0" OR THROUGH THE FROST ZONE. ENOUGH GEOTEXTILE MATERIAL SHALL BE LEFT ON THE TOP (8" OR MORE) TO ROLL OVER THE TOP OF THE CONE.

PREFORMED HIGH DENSITY POLYSTYRENE FILLER PIECES MAY BE USED TO CHANNEL FLOW IN THE BOTTOM OF MANHOLES PROVIDED THEY HAVE AT LEAST 2" OF CONCRETE COVER. THE USE OF THIS MATERIAL FOR CHANNEL FLOW IS RESTRICTED TO MANHOLES WHERE THE BOTTOM SECTION IS NOT SUBJECT TO FREEZING. THE USE OF THIS MATERIAL MUST BE APPROVED BY THE ENGINEER.

MICHIGAN DEPARTMENT OF TRANSPORTATION
BUREAU OF HIGHWAY DEVELOPMENT STANDARD PLAN FOR

DRAINAGE STRUCTURES

F.H.W.A. APPROVAL	6-11-2015 PLAN DATE	R-1-G	SHEET 9 OF 9

3.04.01 (revised 2006)

Point of Rotation

Superelevation may be obtained by rotating about the center or about inside or outside pavement edge profiles. Currently our crowned two-way and two-lane roadways are rotated about the pavement centerline per Standard Plan R-107-Series. This method reduces the edge distortion because the required change in elevation is distributed along both pavement edges rather than all on one edge. Uncrowned or straight cross slope pavements, such as ramps, are rotated about the alignment edge. Special consideration should be given to superelevating wider pavements (i.e., three-lane or five-lane sections) as the point of rotation should be determined by site conditions. See Standard Plan R-107-Series.

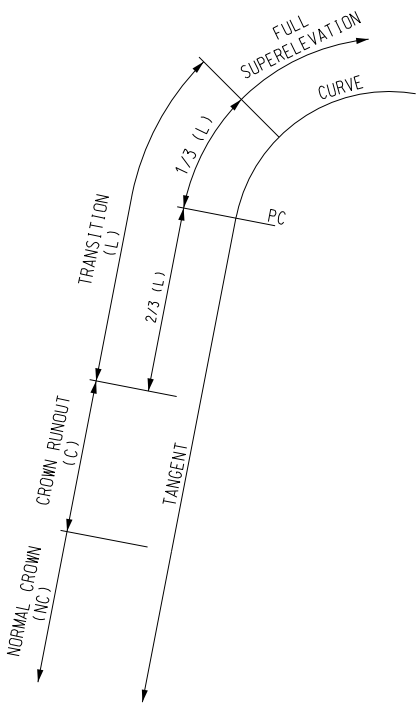

3.04.02 (revised 6-22-2015)

Superelevation Transitions

The superelevation transition consists of the superelevation runoff (or transition (L)) and tangent runout (or crown runout (C)). The superelevation runoff section consists of the length of roadway needed to accomplish a change in outside-lane cross slope from zero (flat) to full superelevation, or vice versa. The superelevation runoff is determined by the width of pavement (W), superelevation rate (e), and the relative gradient along the edges of pavement (Δ%). As indicated in Standard Plan R-107-Series, one third of the superelevation runoff length is located in the curve. When this cannot be achieved, the runoff length can be adjusted to a 30% minimum and 40% maximum inside the curve. The tangent runout section consists of the length of roadway needed to accomplish a change in outside-lane cross slope from the normal cross slope rate to zero (flat), or vice versa. The tangent runout is determined by the width of pavement (W), normal cross slope/normal crown (N.C.), and the relative gradient. Relative gradient values correspond to the superelevation rates. The gradient may be increased as needed up to the maximum relative gradient for the design speed. A design exception is required for values exceeding the maximum relative gradient.

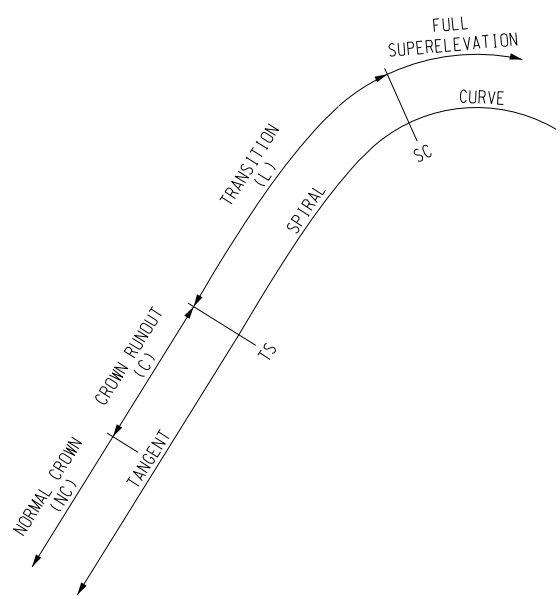

3.11.03 (continued)

Safety Considerations

K. Clear Zones & Fixed Objects

The current clear zone criteria specified in Section 7.01.11 should be used when upgrading freeways. Obstacles within these limits should be shielded or removed. Obstacles beyond these limits, but within the recovery area, should be reviewed by the Geometrics Unit in the Design Division.

L. Culvert End Treatments

The ends of culverts located within the clear zone on projects programmed for upgrading shall be according to ***MDOT Drainage Manual***, Section 5.3.5.

M. Bridges

See the Bridge Management Unit, Construction Field Services Division for FHWA conformance requirements.

3.12 (revised 6-22-2015)

UNDERCLEARANCES

A. 4R Freeway

Roadway 4R projects on the Freeway System must be designed to meet the current AASHTO vertical clearance requirement of 16'-0" (16'-3" is desired for future overlay of the road). Scoping of projects must include a determination of the most effective means of obtaining the vertical clearance standard. A cost/benefit analysis to determine how best to achieve the standard, either in full or with incremental progress needs to be prepared. The analysis should include the alternatives of obtaining all vertical clearances with the road project, a bridge project, or some combination of road and bridge work to meet the clearance requirements. In many cases it may not be possible to achieve the complete vertical clearance with the proposed road project. If the most efficient plan for meeting the vertical clearance requirement is incremental progress, a design exception will be required. The design exception should be submitted as soon as possible, preferably prior to the submittal of the call for projects. This assures that design is not started on projects that may not be approved. The following is the minimum information required to prepare a vertical clearance analysis. This information is also required if a design exception is submitted.

- Preliminary grades for the bridge and approaches, the route under the structure, and ramps if appropriate.
- Location of existing structure foundations related to the proposed grade changes.
- Impact evaluation on existing drainage.
- Evaluation of any other deficient geometric feature.

3.12 (continued)

UNDERCLEARANCES

G. Vertical Clearance Requirement Table

The desired vertical bridge underclearance should be provided as indicated below. If the desired underclearance cannot be provided, then the minimum underclearance shall be met. Where it is considered not feasible to meet these minimums, a design exception shall be requested. See the vertical underclearance design exception matrix in this section and Section 12.02 of the Bridge Design Manual. Requests to further reduce the underclearance of structures with existing vertical clearance less than indicated in the chart below should be made only in exceptional cases.

VERTICAL CLEARANCE REQUIREMENT TABLE

Route Classification Under the Structure	All Construction (Desired)	New Construction (Min *)	Road 4R Construction (Min *)	Bridge 4R Construction (Min *)	3R Construction (Min *)
Freeways	16'-3"	16'-0"	16'-0"	16'-0"	16'-0"
NHS Arterials (Local & Trunkline)	16'-3"	16'-0"	Maintain Existing ** and 14'-6" Min	16'-0"	Maintain Existing ** and 14'-0" Min
Non NHS Arterials (Local & Trunkline)	16'-3"	14'-6"	Maintain Existing ** and 14'-6" Min	Maintain Existing ** and 14'-6" Min	Maintain Existing ** and 14'-0" Min
Collectors, Local Roads & Special Routes (1)	14'-9"	14'-6"	Maintain Existing ** and 14'-6" Min	Maintain Existing ** and 14'-6" Min	Maintain Existing ** and 14'-0" Min

* Minimum vertical clearance must be maintained over complete usable shoulder width.

** Existing vertical clearances greater than or equal to the minimums shown may be retained without a design exception. Vertical clearance reductions that fall below the minimums for new construction require a design exception.

Information on the NHS system can be obtained by contacting the Statewide Planning Section, Bureau of Transportation Planning or found on the MDOT Web site at: http://www.michigan.gov/mdot-nfc

(1) Special Routes are in highly urbanized areas (where little if any undeveloped land exist adjacent to the roadway) where an alternate route of 16'-0" is available or has been designated. Bridges located on Special Routes in Highly Urbanized Areas can be found on the MDOT website at: http://mdotcf.state.mi.us/public/design/files/englishbridgemanual/Exempt_Structures.pdf

Ramps and roadways connecting a Special Route and a 16'-0" route require a vertical clearance minimum of 14'-6" (14'-9" desired). Ramps and roadways connecting two 16'-0" routes require a vertical clearance minimum of 16'-0" (16'-3" desired).

Pedestrian bridges are to provide 1'-0" more underclearance than that required for a vehicular bridge. For freeways (Interstate and non Interstate), including Special Route Freeways, the desired underclearance shall be 17'-3" (17'-0" minimum).

A vertical clearance of 23'-0" is required for highway grade separations over railroads. Clearance signs are to be present for structures with underclearance 16'-0" or less (show dimensions 2" less than actual). See http://mdotcf.state.mi.us/public/tands/plans.cfm for additional information and guidelines.

For shared use paths (pedestrian and bicycle) the vertical clearance to obstructions, including overhead fencing, shall be a minimum of 8'-6" (10'-0" desired). However, vertical clearance may need to be greater to permit passage of maintenance and emergency vehicles. In undercrossings and tunnels, 10'-0" is desirable for vertical clearance. See AASHTO's Guide for the Development of Bicycle Facilities.

6.03.09 (revised 6-22-2015)

Hot Mix Asphalt (HMA) Mixture Selection Guidelines

This guide is to aid in the selection of Hot Mix Asphalt (HMA) mixtures, asphalt binders and Aggregate Wear Index values. It is the ultimate responsibility of the Region Soils/Materials Engineer to provide appropriate hot mix asphalt and thickness recommendations. Any questions regarding these guidelines should be addressed to either the HMA Unit or the Pavement Design Engineer in the Construction Field Services Division.

A. Rehabilitation, Reconstruction (R&R) and New Construction Projects

1. Mainline Paving

a) Mixture Selection

All mainline paving shall be composed of Superpave mixtures; exceptions do exist for the Capital Preventive Maintenance Program (CPM) (see Section 6.03.09B).

Computed Design BESAL's (HMA Equivalent Single Axle Load) will be used to identify the appropriate Superpave mixture type.

6.03.09A1a (continued)

Superpave Mix Type	Design BESAL (millions)
E03/LVSP	Less than 0.3
E1	Between 0.3 and 1.0
E3	Between 1.0 and 3.0
E10	Between 3.0 and 10.0
E30	Between 10.0 and 30.0
E50	Between 30.0 and 100.0
GGSP	Between 10.0 and 100.0

GGSP is to only be used as a top course mixture.

Design BESAL's are calculated using the following information:

- Commercial Traffic
- Traffic Growth Rate
- Lane Distribution of Commercial Traffic
- BESAL Axle Load Equivalency for Flexible Pavement
- Total accumulated BESAL's for 20 year design

The method for calculating ESAL's for flexible pavements (BESAL's) is explained in the ***AASHTO Guide for Design of Pavement Structures,*** 1993. Design BESAL's should be requested from the Project Planning Section of the Project Planning Division. The Pavement Design Engineer of the Pavement Management Section of the Construction Field Services Division can provide an approximate BESAL value (for estimating purposes only). Show the 20 year design BESAL's on the design plans.

b) Superpave Mixture Number Designation and Thickness Guidelines

After mixture selection has been determined, based on design BESAL's, the mixture number for use in the various pavement courses can be determined**.** The mixture number will be 2, 3, 4 or 5 depending on the nominal maximum size aggregate. Following are the mixture numbers, minimum/maximum application rates and course type application:

6.03.09A1b (continued)

Hot Mix Asphalt (HMA) Mixture Selection Guidelines

Mixture #	Minimum Application	Maximum Application	Course Application
2	435 lbs/syd	550 lbs/syd	Base
3	330 lbs/syd	410 lbs/syd	Base and/or Leveling
4	220 lbs/syd	275 lbs/syd	Leveling and/or Top
5	165 lbs/syd	220 lbs/syd	Top
LVSP	165 lbs/syd	220 lbs/syd	Top
LVSP	165 lbs/syd	250 lbs/syd	Leveling
GGSP (⅜" Nom. Max.)	165 lbs/syd	225 lbs/syd	Top
GGSP (½" Nom. Max.)	220 lbs/syd	275 lbs/syd	Top
ASCRL	225 lbs/syd	425 lbs/syd	Base

NOTES:

1. Estimated application rate of 110 lbs/syd. per inch of compacted thickness. When using GGSP contact the HMA Unit at the Construction Field Services Division for the estimated application rate. When using ASCRL the estimated application rate is 85 lbs/syd per inch of compacted thickness.
2. Pavement designs requiring greater thickness than the specified maximum will require multiple lifts.
3. Crush and Shape: Use a minimum of two lifts over crushed materials. A minimum of 220 lbs/syd for the first lift is required for construction purposes.
4. Rubblized Concrete: The first lift over the rubblized concrete will be a minimum of 220 lbs/syd. For freeways and divided highways, traffic should not be allowed on the rubblized section until at least two courses have been placed. In those situations where the rubblized roadway must be opened to traffic at the end of each day, traffic may be allowed on the first course provided there is a minimum thickness of 265 lbs/syd.
5. Wedging and hand patching shall use mainline top course mixture (see appropriate section for binder selection).

The following are the Superpave definitions for Top, Leveling and Base course. This definition should be referred to when making the asphalt binder and mixture selections: **The Top and Leveling courses are defined as the mixture layers within 4 inches of the surface; the base course is defined as all layers below 4 inches of the surface. For mixture layers which fall within the 4 inch threshold, the following rule should apply:**

If less than 25% of a mixture layer is within 4 inches of the surface, the mixture layer should be considered to be a base course.

6.03.09A1b (continued)

Hot Mix Asphalt (HMA) Mixture Selection Guidelines

Below are examples of Superpave Pay Items and descriptions:

HMA 3E10 - A leveling or base course with a minimum application rate of 330 lbs/syd on a project that has design BESAL's between 3 and 10 million

HMA 4E03 - A top or leveling course with a minimum application rate of 220-lbs/syd on a project that has design BESAL's less than 0.3 million

c) High Stress HMA

High Stress HMA is to be used at locations that are susceptible to rutting early in a pavement's life. This typically occurs at signalized intersections, areas of stop/start traffic, roundabouts and areas where there are high levels of commercial turning movements. The difference between the High Stress HMA and the typical Superpave HMA is the Performance Graded binder. High Stress HMA requires the upper temperature limit to be increased one level as can be seen in the Asphalt Binder Selection tables of Section D. The increase in the high temperature number results in an asphalt binder with improved high temperature stiffness or rutting resistance for both the leveling and top course. High Stress HMA is only applicable for top and leveling courses.

Application Guide:

- Use High Stress HMA 1000 feet on either side of the center of signalized intersections, other areas where stop/start traffic occurs, and at locations that experience high levels of commercial traffic turning movements (for quantity calculations use 1100 feet).

6.03.09A1c (continued)

- Intersecting roads and commercial drives that are adjacent to the High Stress HMA mainline should use High Stress HMA Approach.

- Use High Stress HMA between signalized intersections when they are spaced 1 mile or less.

- Use High Stress HMA Approach for the circulating lanes and the entry and exit legs of a roundabout to the point where the roadway returns to the normal approach road width.

When developing plans the designer should set up the pay item of High Stress HMA. Standard pay items exist for all Superpave Mix Types that are applicable to High Stress HMA. When the pay item of High Stress HMA is set up on a project the applicable frequently used special provision should be included in the proposal. Additionally, the appropriate High Stress binder grade must be identified in the HMA Application Estimate Table.

d) Asphalt Binder Selection

The following pages contain the Asphalt Binder usage table for all Superpave mixtures and High Stress HMA. Asphalt Binders with the suffix P denotes that polymer modified performance grade binder is required. It is the responsibility of the designer to select the appropriate binder for each mixture and course. The selected binder (including the suffix P when applicable) needs to be clearly identified in the binder column of the HMA Application Estimate Table. Be sure to add the Special Provision for POLYMER MODIFIED PERFORMANCE GRADE BINDERS to the proposal.

6.03.09A1d (continued)

Hot Mix Asphalt (HMA) Mixture Selection Guidelines

North, Grand, Bay, Southwest and University Region

Mixture Type	HMA Mainline		High Stress HMA	
E30, E50, GGSP	PG 70-28P PG 64-22	Top & Leveling Course Base Course	PG 76-28P PG 64-22	Top & Leveling Course Base Course
E10	PG 64-28 PG 58-22	Top & Leveling Course Base Course	PG 70-28P PG 58-22	Top & Leveling Course Base Course
E3	PG 64-28 PG 58-22	Top & Leveling Course Base Course	PG 70-28P PG 58-22	Top & Leveling Course Base Course
LVSP, E03, E1	PG 58-28 PG 58-22	Top & Leveling Course Base Course	PG 64-28 PG 58-22	Top & Leveling Course Base Course

Superior Region

Mixture Type	HMA Mainline		High Stress HMA	
E10	PG 58-34 PG 58-28	Top & Leveling Course Base Course	PG 64-34P PG 58-28	Top & Leveling Course Base Course
LVSP, E03, E1, E3	PG 58-34 PG 58-28	Top & Leveling Course Base Course	PG 64-34P PG 58-28	Top & Leveling Course Base Course

Metro Region

Mixture Type	HMA Mainline		High Stress HMA	
E30, E50, GGSP	PG 70-22P PG 64-22	Top & Leveling Course Base Course	PG 76-22P PG 64-22	Top & Leveling Course Base Course
E10	PG 64-22 PG 58-22	Top & Leveling Course Base Course	PG 70-22P PG 58-22	Top & Leveling Course Base Course
E3	PG 64-22 PG 58-22	Top & Leveling Course Base Course	PG 70-22P PG 58-22	Top & Leveling Course Base Course
LVSP, E03, E1	PG 58-22	Top, Leveling & Base Course	PG 64-22 PG 58-22	Top & Leveling Course Base Course

NOTES:

1. For selection of binders on commercial and private Approaches, Wedging, and Hand Patching see Table 2.
    a. For shoulders paved in separate operation, use PG 58-28 for all Regions.
    b. For Temporary Roads, commercial and private Approaches, Wedging, and Hand Patching, use PG 64-22 for all Regions except Superior and North, use PG 58-28.

6.03.09A (continued)

Hot Mix Asphalt (HMA) Mixture Selection Guidelines

2. Non-Mainline Paving

Non-mainline mixture selection should be based on the following table:

Design BESAL's (millions) Mainline	Shoulders ≥ 8' or shoulders paved in a separate operation All Courses (2) (5)		Ramps and Temporary Roads All Courses (1) (4)		Approaches, Wedging and Hand Patching (3) (4) (6) (7)
	Mixture Type	Application Rate	Mixture Type	Application Rate	Mixture Type
≤ 10.0	LVSP/E03 Top LVSP/E03 Lev	165-220 lbs/syd 220-250 lbs/syd	LVSP/E03 Top LVSP/E03 Lev	165-220 lbs/syd 220-250 lbs/syd	Mainline Top Course (4)
> 10.0	5E3 Top 4E3 Top	165-220 lbs/syd 220 lbs/syd	5E3 Top 4E3 Top	165-220 lbs/syd 220 lbs/syd	Mainline Top Course (4)
	4E3 Level 3E3 Level	220-275 lbs/syd 330 lbs/syd	4E3 Level 3E3 Level	220-275 lbs/syd 330 lbs/syd	
	3E3 Base 2E3 Base	330-410 lbs/syd 435-540 lbs/syd	3E3 Base 2E3 Base	330-410 lbs/syd 435-540 lbs/syd	

NOTES:

(1) There are cases where the mainline mixture may be used on the ramps. Example: Ramps with high traffic volume resulting in frequent periods of slow moving and standing load applications.

(2) Use a PG 58-28 binder for all Regions.

(3) The appropriate shoulder or mainline mixture (determined from 20 year design BESAL's) may be used on driveways and low traffic volume approaches.

(4) Use a PG 64-22 binder for all regions except Superior and North, use a PG 58-28.

(5) Shoulders paved integrally with the mainline will use the same mix as used on the mainline.

(6) If more than one mixture and/or binder combination is required for bituminous approach, it should be clearly shown in the HMA Application Estimate Table..

(7) Show the mixture type for Hand Patching in the HMA Application Estimate Table.

CHAPTER 14 PROCEDURES FOR PLAN PREPARATION INDEX (continued)

14.10 SCOPE VERIFICATION MEETING

14.11 DESIGN EXCEPTIONS

14.12 REQUEST FOR SURVEY / MAPPING

14.12.01 Road

14.12.02 Bridge

14.13 PROJECT AREA CONTAMINATION SURVEY

14.14 REVIEW / REVISE PPMS NETWORK

14.15 CHANGE REQUEST (REVIEW OF PROJECT SCOPE, COST AND SCHEDULE)

14.16 REQUEST FOR UTILITY INFORMATION

14.17 FAA OBSTRUCTION EVALUATION

14.18 PAVEMENT DESIGN

14.19 REQUEST FOR PAVEMENT CORES / SOIL BORINGS

14.20 RECEIPT OF SURVEY / MAPPING DATA

14.21 BRIDGE REVIEW

14.21.01 Review by Bridge Design

14.21.02 Historic Bridges

14.21.03 Bridge Loading and Underclearance Review

14.21.04 Special Structures / Footing Design

14.22 RAILROAD COORDINATION

14.23 REQUEST FOR TRAFFIC VOLUMES

14.24 REQUEST FOR CRASH ANALYSIS AND SAFETY REVIEW

14.25 REQUEST FOR SPECIAL SOILS INVESTIGATIONS AND / OR DESIGNS

14.26 DISTRIBUTION OF PRELIMINARY PLANS TO UTILITIES AND UTILITY COORDINATION MEETING

14.27 VALUE ENGINEERING

14.16 (continued)

REQUEST FOR UTILITY INFORMATION

Note:
When project information exceeds the allowed space on Form 2480 an additional document shall be supplied by the Project Manager detailing this information. The applicable field(s) on Form 2480 shall state "see attached sheet" when this occurs.

2. Receive the Cover Letter and all Form 2480 letters within 7 working days from the TSC Utility Coordinator.

3. Review and sign Form 2480 letters

4. Send Form 2480 letters and plans to the utilities with courtesy copies to TSC Utility Coordinator.

   Note:
   Old plans, Right-of-Way maps, or MDOT Construction Base Plans are acceptable for sending to the utilities. The plans must provide the project's location and limits of work. Vicinity maps may be included for general information, but shall not be used as the sole project plans as they provide inadequate information for the utilities to plot their facilities. This includes log jobs that may affect a utility.

5. Receive returned Form 2480 and plans from the TSC Utility Coordinator

   Note:
   The TSC Utility Coordinator will follow-up with non-responsive utilities and provide a status to the Project Manager.

6. Plot all utility facilities on the Preliminary Plans.

14.17 (added 6-22-2015)

FAA OBSTRUCTION EVALUATION

Federal regulation (14 CFR Part 77.9) requires notification with the FAA (Federal Aviation Administration) when construction alteration, or activity is planned in a zone that may impact aircraft flight operations. This may include changes in grades, structure elevations, lighting, towers, crane heights, etc.

Notification must be filed for any of the following conditions:

- Any construction or alteration exceeding 200 ft. above ground level
- Any construction or alteration:
  - Within 20,000 ft. of a public use or military airport which exceeds a 100:1 surface from any point on the runway of each airport with its longest runway more than 3,200 ft.
  - Within 10,000 ft. of a public use or military airport which exceeds a 50:1 surface from any point on the runway of each airport with its longest runway no more than 3,200 ft.
  - Within 5,000 ft. of a public use heliport which exceeds a 25:1 surface.
- Any highway, railroad or other traverse way whose prescribed adjusted height would exceed the above noted standards.
- When requested by the FAA.
- Any construction or alteration located on a public use airport or heliport regardless of height or location.

The notice can be filed either by mail or electronically on the FAA Obstruction Evaluation / Airspace Analysis website.

The website features a "Notice Criteria Tool" to assist in determining if a project location is in a zone of influence requiring notification.

14.17 (continued)

FAA OBSTRUCTION EVALUATION

The Project Manager should determine as soon as possible if a notification is required. If a notification is required, it should be filed prior to OEC to allow the FAA to make a determination early enough to accommodate any conflicts. Allow 45 days from the time of submittal for FAA review.

Questions regarding the filing requirement or procedure should be directed to the Aeronautics Division, Planning and Development Section.

14.18 (revised 3-26-2012)

PAVEMENT DESIGN

After the scope verification meeting, the Project Manager should determine the estimated pavement costs of the project. Depending on the type of work and estimated cost, a Life Cycle Cost Analysis (LCCA) may be required. This along with the actual pavement design will be done by either the Region/TSC Pavement Design Engineer or the Operations Unit of the Construction Field Services Division – Pavement Operations. Those done by the Operations Unit must be submitted for approval to the Engineering Operations Committee (EOC). See Section 6.01.06.

14.19

REQUEST FOR PAVEMENT CORES / SOIL BORINGS

(PPMS Task Description #'s 3110 & 3510)

Most projects will require pavement core information, especially those involving pavement removal, rubblizing, crushing and shaping and/or cold milling. This information is useful not only in verifying the type of fix but also in assisting the Contractor in developing their bid prices. Pavement cores should be requested as soon as possible after the Scope Verification Meeting. The Project Manager should check with the Region/TSC involved to find out if cores were taken during the Call-for-Projects process.

When requesting pavement cores the Project Manager should include the following:

- Set of plans
- Description of what information is needed
- Desired location
- A target date when the information is needed

14.26 (continued)

DISTRIBUTION OF PRELIMINARY PLANS TO UTILITIES AND UTILITY COORDINATION MEETING

3. Participate in the Utility Coordination Meeting if scheduled. The meeting shall discuss the following topics:
   - Introductions
   - Project Summary
     - Plan completion date
     - Letting Date
     - Construction start date
   - Key work areas that potentially involve utility conflicts
   - Municipal utilities
     - Relocations
     - Plan and specifications preparation
     - Betterments
   - Review entire project using one of the following methods:
     - Review the project utility by utility with each utility taking a turn to describe issues and concerns over the entire project.

       Note:
       If a utility only has minor involvement in the project, or has other schedule commitments the utility's involvement shall be discussed early in the meeting.

     - Review the plans sheet by sheet. Each utility takes a turn describing involvement and concerns for each sheet.

   Note:
   The TSC Utility Coordinator shall act as a facilitator and a resource for utility relocation policies/procedures in helping the utilities and Design Team work through the various utility issues and arrive at mutually agreeable resolutions to utility conflicts.

4. Receive meeting minutes from the TSC Utility Coordinator.

5. Ensure any required changes to the plans are made prior to OEC.

14.27 (revised 6-22-2015)

VALUE ENGINEERING
(PPMS Task Description 3375)

A. Definitions

Value Engineering (VE) - A systematic process of review and analysis of a project, during the concept and design phases, by a multi-disciplined team of persons not involved in the project, that is conducted to provide recommendations for:

1. Providing the needed functions safely, reliably, efficiently, and at the lowest overall cost;
2. Improving the value and quality of the project; and
3. Reducing the time to complete the project.

Applicable VE Project - A portion of highway that is proposed for construction, reconstruction, or improvement as described in the preliminary design report or applicable environmental clearance document. A project may consist of several job numbers/contracts or phases over several years.

Estimated Total Cost of a Project - The estimated cost of the project includes the cost of all phases of a project including environmental, design, right-of-way, utilities and estimated construction cost based on final design.

Road Projects VE Study Cost Threshold - The federal regulations on VE studies are in 23 CFR Section 627. MDOT's policy requires VE studies on all road projects that have a total project cost of $25 million or greater. The total project costs is the sum of the costs for all phases of the project. If any part of the environmental clearance document is to be let for construction, it must have a VE study even if the cost of the construction work is less than $25 Million. VE studies may also be conducted on projects below the required threshold when it is determined that a VE study may be beneficial to the project.

14.27 (continued)

VALUE ENGINEERING

Bridge Project VE Study Cost Threshold - A project is considered a bridge project if the majority of the cost/work is related to bridge work. The federal regulations on VE studies are in 23 CFR Section 627. MDOT's policy requires VE studies on all bridge projects that have a total project cost of $20 million or greater. The total project costs is the sum of the costs for all phases of the project. If any part of the environmental clearance document is to be let for construction, it must have a VE study even if the cost of the construction work is less than $20 Million.

Value Engineering Re-Study - If a project has a change to the scope of work between the final design and the letting, then FHWA will require an updated VE analysis.

Value Engineering Proposal/ Recommendation - The ideas resulting from a Value Engineering study that provide the project's functional requirements at less cost or improve value or service with no increase in cost. VE Proposals must have documented decisions and implementation. Proposals/recommendations that increase the cost of a project and still provide improved value are classified as Value Engineering Design Suggestions.

Value Engineering Change Proposal (VECP) - A frequently used special provision that is placed in all construction contracts except Construction Manager General Contractor (CMGC) and Design Build (DB) projects. It encourages the contractor to propose changes in contract work that will accomplish the project's functional requirements at less cost, reduced time, or improve value or service at little or no increase in cost. The net savings of each proposal is shared with the contractor at a stated rate (50-50). MDOT's procedures for Construction VECP's are contained in Bureau of Highways Informational Memorandum 2014-03.

14.27 (continued)

MDOT State VE Coordinator - Design Division staff person responsible to assure all VE studies are completed per the Federal Regulations. The State VE Coordinator works with the Design Project Manager and other design personnel to schedule, complete, follow up and document VE Studies and decisions. The State VE Coordinator determines if the study can be done by MDOT personnel or by a Consultant. To hire a Consultant, they solicit and establish the contract per current vendor selection procedures. At the year end, they prepare the annual FHWA report on VE Studies documenting VE studies and activities. They also determine if a recommendation may be warranted as a best practice and provide information statewide.

VE Facilitator - A qualified facilitator experienced in performing and leading VE studies. MDOT personnel who facilitate VE studies must be experienced in VE studies and have additional facilitation and process reengineering training. VE studies done by outside consultant firms must have a VE facilitator with sufficient VE training, education and experience to be recognized by SAVE International as meeting the requirements for certification.

VE Team - The group with diverse expertise suited to the scope and complexity of a project to participate in the VE study. At a minimum, design, construction, and maintenance shall be represented on the team. In the event of specialized projects, individuals with specific expertise necessary to perform a proficient Value Engineering study should be included in the team makeup. The VE Team must also include member(s) experienced in estimating construction costs and cost-benefit analysis. All members should have completed a Module 1 Value Engineering training seminar or have prior Value Engineering experience. The composition of the expertise should reflect the complexity of the project design to be studied. At least two members of the team should be experienced in the high-cost areas of the project. Anyone directly involved in the design of the project should not be a team member, but is expected to participate as an information source.

14.27 (continued)

VALUE ENGINEERING

B. Federal Regulation

Title 23 CFR 627 under the authority of 23 USC Chapter 1, Section 106(e) requires a Value Engineering study be conducted before the advertisement/letting of all Federal Aid projects with an estimated total project cost of $50 million or greater for a road project, or $40 million or greater for a bridge project. See the previous section for MDOT thresholds, definitions of "project" and VE study requirements. The VE study might encompass a longer corridor of similar work, but only the projects for which there are design plans or sufficient scoping information available will receive VE credit.

Design/Build projects used to expedite the completion of a project are exempt from VE requirement. However, a Value Engineering study may be conducted prior to advertising the Request for Proposals of the Design/Build contract if requested by the Region or Leadership.

Road projects with a total cost between $25 million and $50 million or stand-alone bridge projects with a total cost between $20 million and $40 million may be exempt from a Value Engineering Study on a project by project basis if approved by the EOC.

14.27 (continued)

C. Procedures

1. **Identification of Potential VE Studies.** The State VE Coordinator prepares a list of potential VE studies and sends it to the System Managers and FHWA for concurrence.

   The VE study is commonly performed between concept and 30% plan completion. Holding the VE study early allows the recommendations to be considered without disruption to the design process.

2. **Funding.** The Design Project Manager will confirm or obtain sufficient funding in the C phase for the VE study. The cost of a study can range from $15,000 to $75,000.

3. **Scheduling VE Study.** The Design Project Manager and State VE Coordinator determine the VE Team. Team members should not be directly involved in the project design.

   Based on the project, the State VE Coordinator and the Design Project Manager will choose one of the following methods for conducting the VE study:

   a. A Consultant is hired to perform all parts of the VE study. Two to three MDOT/FHWA personnel are invited to join the VE Team.

   b. MDOT performs all parts of the VE study, usually facilitated by personnel from Performance Excellence Division.

   c. A Consultant is hired to provide a VE Facilitator/Trainer and MDOT/FHWA will provide the VE Team.

14.27 (continued)

VALUE ENGINEERING

4. **Information Needed for VE Study.** The Project Manager(s) gathers current project. information and provides it to the VE Facilitator. The VE Facilitator distributes the information to the VE Team prior to the first day of the VE study. This information can include but is not limited to the following:

   1. Existing Aerials
   2. Project Photographs
   3. As Built Plans, Base Plans
   4. Project Area Map
   5. Environmental Clearance Document or Issues
   6. Right of Way Plans or Concerns
   7. Agreements
   8. Utility Plans or Encroachment Issues
   9. Detour, Staging Concepts, or Restrictions
   10. Traffic Data
   11. Crash Data
   12. Context Sensitive Design Issues
   13. Constructability Issues
   14. Current Cost Estimate
   15. Scoping Reports/ Scope Verification Meeting Minutes
   16. Design Exceptions
   17. Construction/Letting Schedule
   18. Structure Appraisal and Inventory
   19. Bridge Safety Inspection Report
   20. Geotechnical Soils Reports and Foundation Reports
   21. Hydrology/Hydraulic Information
   22. Maintenance Records

   In addition, the Project Manager should develop a written document to provide the VE Team with information on functionality (what is main purpose of project), constraints, needs, and/or any requirements that the VE Team should know about.

14.27 (continued)

5. **The VE Study.** The VE study consists of the following phases:

   Information Phase: The Project Manager presents project background information and is available for questions. The VE Team determines the needs, requirements, and constraints of the owners/users/stakeholders, as well as the design criteria. The VE Team develops a cost model, breaks the project down into functions, and performs functional analysis.

   Speculation Phase: Brainstorming takes place to generate ideas to add value to the project without changing the function.

   Evaluation Phase: The best ideas from the Speculation Phase are selected for consideration based on best blend of performance, cost and schedule.

   Development Phase: Best ideas are developed into VE proposals and design recommendations through sketches, cost estimates, and schedules. Both initial and life-cycle costs will be examined.

   Decision Phase: The Decision Team decides if the VE Proposals should be Accepted, Accepted for Further Study or Rejected. The final decisions are documented by the VE Team facilitator in the final VE Report. If a VE recommendation has a potential savings of more than $1.0 million, the Region Engineer must also be included on the Decision Team.

14.27 (continued)

VALUE ENGINEERING

6. **The VE Study Report**. The VE Facilitator/VE Team prepares and provides electronically a final report. A typical report includes the following: executive summary, participant list, research sources, project history (including project criteria, commitments, and constraints), existing design, performance criteria, basic functions, life cycle cost estimate, proposal descriptions and cost calculations, implementation plan and documentation of MDOT's decisions regarding the recommendations.

   The State VE Coordinator saves the final report in ProjectWise and provides a copy to the FHWA.

   Recommendations Accepted for Further Study. The MDOT Project Managers will report the outcome of unresolved recommendations that were labeled as "Recommendations Accepted for Further Study" to the State VE Coordinator for the annual report.

.

14.27 (continued)

7. **Annual Reporting**

   MDOT Annual Report. The State VE Coordinator prepares an annual report on the VE recommendations received during the previous year. The report includes certain cost and savings data (recommendations, recommended cost savings, VE study cost, etc.). It is provided to MDOT Management and staff involved in scoping new projects to encourage alternate solutions that provide cost savings or maximized benefits at little or no increase in cost.

   FHWA Annual Report. The State VE Coordinator submits an annual report to the FHWA Division Office each year for national compilation and distribution. The report includes the number and cost of VE's and VECP's held and the value of recommendations made (both accepted and rejected).

14.30 (revised 2-18-2010)

PRELIMINARY CONSTRUCTABILITY REVIEW
(PPMS Task Description 3565)

Constructability is taken into account during the scoping and early plan development process (and in conjunction with the Early Project Scoping Constructability Checklist). After the Job Concept Statement has been created in MPINS, the Project Manager/Concept Author should consult with the Region/TSC Delivery Engineer concerning items such as Coordinating with other Agencies, Permits, Staging, Maintaining Traffic, Site Investigation, and Right of Way. Much of the work under this task should occur before the Scope Verification Meeting. On small projects this task may consist of only the transmittal of base plans to the Resident/Delivery Engineer for comment. On large projects with complex staging, one or more meetings with the Resident/Delivery Engineer and Region/TSC Traffic and Safety Engineer may be required throughout this task. In both instances the review and incorporation of any comments must occur prior to Preliminary Plan Development.

14.31 (revised 3-26-2012)

ENVIRONMENTAL REVIEW AND CLEARANCE

Environmental review and clearance is a two step process: Environmental Classification (PPMS Task 3150) and Environmental Certification (PPMS Task 3155).

14.31.01 (revised 6-22-2015)

Environmental Classification
(PPMS Task 3150)

Environmental Classification is required by the National Environmental Policy Act (NEPA). All projects must be reviewed for potential environmental impacts and classified according to the significance of those impacts. Class I Actions are those projects with significant environmental impacts and require the preparation of an Environmental Impact Statement (EIS). Class II Actions have minor or no environmental impacts and require Categorical Exclusion (CE) documentation (Form 1775-LAP). Class III Actions are projects where the significance of the impacts is not known and require the preparation of an Environmental Assessment (EA).

Most projects are classified as CEs. However, environmental review is still required to identify non-significant environmental impacts, and establish measures to mitigate those impacts. Measures to mitigate can include avoidance, design changes, protective measures, or replacement. Establishing mitigation measures can be complex and require coordination with state, federal and local resource agencies. Often, mitigation measures can be developed through collaboration between the Project Manager (PM) and MDOT Environmental Staff.

14.31.01 (continued)

Environmental Classification

The Environmental Clearance Coordinator (ECC) will contact the PM about one year prior to the Base Plan Date (BPD), or upon notification of project programming (Form 2604) for projects of short development duration. The ECC will request information about the scope and location of the project. This information can include the extent of grading and filling, right of way requirements, detour information, etc., and is critical in assessing project environmental impacts. The project description, location, and other pertinent project information are put on the Environmental Classification (Form 1775-LAP). MDOT Environmental Staff may contact the PM for more details about the project in order to assess impacts.

Once impacts are assessed, collaboration occurs between the PM and MDOT Environmental Staff, to develop mitigation measures. The goal of collaboration is to develop measures that both allow the project to accomplish its transportation goal and minimize impacts to the environment. Once impacts are identified and mitigation measures established the project can be classified as a CE. The PM will be notified and the Environmental Classification (Form 1775-LAP) and supporting documentation will be stored in ProjectWise under the Project Job Number. Classification is also recorded in the MAP database (MPINS/MFOS/REMIS). Classification is scheduled to occur on or before the completion of Base Plan Review (PPMS Task 3380).

The Form 1775-LAP filled out by the ECC will have highlighted mitigation measures in bold text to signify that those measures are to be transmitted directly to the TSC Construction Engineer for the project.

It will be the responsibility of the Project Manager and the ECC to ensure that all mitigation measures whether or not highlighted in bold on the 1775-LAP form are incorporated into the project plans and proposal.

14.31.01 (continued)

Prior to completions of the NEPA review process, preliminary engineering and other activities and analyses must not materially affect the objective consideration of alternatives in the NEPA review process. FHWA defines Preliminary Design as activities that define the general project location and design concepts. It includes, but is not limited to, preliminary engineering and other activities and analyses, such as environmental assessments, topographic surveys, metes and bounds surveys, geotechnical investigations, hydrologic analysis, hydraulic analysis, utility engineering, traffic studies, financial plans, revenue estimate, hazardous materials assessments, general estimates of the types and quantities of materials, and other work needed to establish parameters for the final design.

If the information required for classification requires engineering work or environmental coordination extending beyond the BPD, the PM must receive approval from the ECC to continue work limited to the following tasks:

14.31.01 (continued)

Environmental Classification

Task	PPMS Tasks	Task Extension	Approval
Preliminary Plan Preparation	3500 Series	Up to Plan Review	ECC notification of approval by Bureau of Development Environmental Manager
Utilities/Railroad	3600 Series		
Mitigation/Permits	3700 Series		
Prepare/Review Final Traffic Signal Operations	3825		
Early ROW Work	4100 Series		
ROW Technical Work	4150 Series		
ROW Appraisal Work	4350 Series		
Safety and Mobility Peer Team Review	3800	Up to Plan Completion	ECC notification of approval by FHWA and Bureau of Development Environmental Manager
Conduct Final Geometrics and Roadside Safety Reviews	3810		
Geotechnical Design Review - Structures	3815		
Prepare/Review Final Traffic Signal Design Plan	3821		
Complete Permanent Pavement Marking Plan	3822		
Complete Non-Freeway Signing Plan	3823		
Prepare/Review Final Traffic Signal Operations	3824		
Complete the Maintaining Traffic Plan	3830		
Develop Final Plans and Specification	3840		
Develop Structure Final Plans and Specifications	3850		
Final Constructability Review	3860		
Project Plan Quality Assurance Review	3865		

7.01.05

Fatigue Resistance

The nominal fatigue resistance shall be determined using a structure design life of 75 years and the truck ADTT averaged over the design life. A note providing this information should be placed on the General Plan of Structure sheet (see Section 8.05). Design shall be according to AASHTO LRFD Bridge Design Specifications 3.6.1.4 & 6.6.1.
(8-20-2009)

7.01.06

Deflection

A. Deflection Limits (8-20-2009)

Deflection limits shall be as specified in the current AASHTO LRFD Bridge Design Specifications A 2.5.2.6.2.

The live load shall be taken from A 3.6.1.3.2.

B. Cantilever Deflection Computation

In computing the live load plus impact deflection of cantilevers of composite anchor span, the gross section of the anchor span is to be used. The length of the composite section for this analysis is to be assumed to extend from the bearing line to the point of dead load contraflexure.

7.01.07

Temperature Range

A. The temperature range used to determine thermal forces and movements shall be in conformance with AASHTO "cold climate" temperature range.

B. The type of structure used in determining the temperature range, per AASHTO, shall be defined by the material of the main supporting members of the superstructure or substructure being considered.

7.01.08

Vertical Clearance

A. Requirements

The desired vertical bridge underclearances should be provided as indicated in the following table. If the desired underclearances cannot be provided, then the minimum underclearances shall be met. Where it is considered not feasible to meet these minimums, a design exception shall be requested from the Engineer of Design Programs and subsequently to the FHWA Area Engineer on "FHWA Oversight" (non exempt) projects and from MDOT Engineer of Design Operations - Structures Section on "MDOT Oversight" (exempt) projects (see Section 12.03 also). See the vertical clearance design exception matrix in Appendix 12.02.01. Requests to further reduce the underclearance of structures with existing vertical clearance less than indicated in the following table should be made only in exceptional cases.
(12-5-2005) (1-14-2013) (6-22-2015)

7.01.08 (continued)

Vertical Clearance

A. Requirements

VERTICAL CLEARANCE REQUIREMENT TABLE (8-20-2009) (6-22-2015)

Route Classification Under the Structure	All Construction (Desired)	New Construction (Min *)	Road 4R Construction (Min *)	Bridge 4R Construction (Min *)	3R Construction (Min *)
Freeways	16'-3"	16'-0"	16'-0"	16'-0"	16'-0"
NHS Arterials (Local & Trunkline)	16'-3"	16'-0"	Maintain Existing** and 14'-6" Min	16'-0"	Maintain Existing** and 14'-0" Min
Non NHS Arterials (Local & Trunkline)	16'-3"	14'-6"	Maintain Existing** and 14'-6" Min	Maintain Existing** and 14'-6" Min	Maintain Existing** and 14'-0" Min
Collectors, Local Roads & Special Routes(1)	14'-9"	14'-6"	Maintain Existing** and 14'-6" Min	Maintain Existing** and 14'-6" Min	Maintain Existing** and 14'-0" Min

3R = Rehabilitation, Restoration, Resurfacing

* Minimum Vertical Clearance must be maintained over complete usable shoulder width.

** Existing vertical clearances greater than or equal to the minimums shown may be retained without a design exception. Vertical clearance reductions that fall below the minimums for new construction require a design exception. (6-22-2015)

(1) Special Routes are in Highly Urbanized Areas (where little if any undeveloped land exists adjacent to the roadway) where an alternate route of 16'-0" is available or has been designated. Bridges located over Special Routes in Highly Urbanized Areas can be found on the MDOT website at: http://mdotcf.state.mi.us/public/design/files/englishbridgemanual/Exempt_Structures.pdf. (5-28-2013)

Ramps and roadways connecting a Special Route and a 16'-0" route require a vertical clearance minimum of 14'-6" (14'-9" desired). Ramps and roadways connecting two 16'-0" routes require a vertical clearance minimum of 16'-0" (16'-3" desired). (8-20-2009)

4R = Reconstruction

Information on the NHS systems can be obtained by contacting the Statewide Planning Section, Bureau of Transportation Planning or found on the MDOT website at: http://www.michigan.gov/mdot-nfc (11-28-2011)

Pedestrian bridges are to provide 1'-0" more underclearance than that required for a vehicular bridge. For Freeways (Interstate and non Interstate), including Special Route Freeways, the desired underclearance shall be 17'-3" (minimum 17'-0"). (8-20-2009)

A vertical underclearance of 23'-0" is required for highway grade separations over railroads when constructing a new bridge or removing the existing superstructure. For preventative maintenance, rehabilitation and deck replacement projects the existing railroad vertical underclearance does not need to be increased unless requested by the Railroad. (11-28-2011)

Clearance signs are to be present for structures with underclearance of 16'-0" or less (show dimensions 2" less than actual). See http://mdotcf.state.mi.us/public/tands/plans.cfm for additional information and guidelines. (8-20-2009) (11-28-2011) (11-21-2013)

7.01.04(continued)

Design Loading

J. Barrier Loads

For purposes of beam design, the barrier dead load can be distributed equally to all beams. (AASHTO Std. Specs 17th edition 3.23.2.3.1.1 & AASHTO LRFD 4.6.2.2) However, when calculating superstructure loads on the substructure, particularly for cantilevered pier caps, 75% of the barrier dead load should be applied with the fascia beam load. The remaining 25% of the barrier load should be applied with the first interior beam load. (11-28-2011)

7.01.05

Fatigue Stresses

The allowable stress range should be determined using a structure design life of 75 years and the truck ADT expected at bridge opening. A note providing this information should be placed on the General Plan of Structure sheet (see Section 8.05). (8-6-92)

7.01.06

Deflection

A. Deflection Limits (5-6-99)

LOADING	SIMPLE AND CONTINUOUS SPANS	CANTILEVER
HS25	L/800	L/300
HS20-44	L/1000	L/375
Pedestrian only	L/800	L/300
Timber Bridges	L/375	------

B. Cantilever Deflection Computation

In computing the live load plus impact deflection of cantilevers of composite anchor span, the gross section of the anchor span is to be used. The length of the composite section for this analysis is to be assumed to extend from the bearing line to the point of dead load contraflexure.

7.01.07

Temperature Range

A. The temperature range used to determine thermal forces and movements shall be in conformance with AASHTO "cold climate" temperature range.

B. The type of structure used in determining the temperature range, per AASHTO, shall be defined by the material of the main supporting members of the superstructure or substructure being considered.

7.01.08

Vertical Clearance

A. Requirements

The desired vertical bridge underclearances should be provided as indicated in the following table. If the desired underclearances cannot be provided, then the minimum underclearances shall be met. Where it is considered not feasible to meet these minimums, a design exception shall be requested from the Engineer of Design Programs and subsequently to the FHWA Area Engineer on "FHWA Oversight" (non exempt) projects and from MDOT Engineer of Design Operations - Structures Section on "MDOT Oversight" (exempt) projects (see Section 12.03 also). See the vertical clearance design exception matrix in Appendix 12.02.01. Requests to further reduce the underclearance of structures with existing vertical clearance less than indicated in the following table should be made only in exceptional cases.
(12-5-2005) (1-14-2013) (6-22-2015)

MICHIGAN DESIGN MANUAL
BRIDGE DESIGN

VERTICAL CLEARANCE REQUIREMENT TABLE (11-28-2011) (6-22-2015)

Route Classification Under the Structure	All Construction (Desired)	New Construction (Min *)	Road 4R Construction (Min *)	Bridge 4R Construction (Min *)	3R Construction (Min *)
Freeways	16'-3"	16'-0"	16'-0"	16'-0"	16'-0"
NHS Arterials (Local & Trunkline)	16'-3"	16'-0"	Maintain Existing** and 14'-6" Min	16'-0"	Maintain Existing** and 14'-0" Min
Non NHS Arterials (Local & Trunkline)	16'-3"	14'-6"	Maintain Existing** and 14'-6" Min	Maintain Existing** and 14'-6" Min	Maintain Existing** and 14'-0" Min
Collectors, Local Roads & Special Routes(1)	14'-9"	14'-6"	Maintain Existing** and 14'-6" Min	Maintain Existing** and 14'-6" Min	Maintain Existing** and 14'-0" Min

3R = Rehabilitation, Restoration, Resurfacing

* Minimum Vertical Clearance must be maintained over complete usable shoulder width.

** Existing vertical clearances greater than or equal to the minimums shown may be retained without a design exception. Vertical clearance reductions that fall below the minimums for new construction require a design exception. (6-22-2015)

(1) Special Routes are in Highly Urbanized Areas (where little if any undeveloped land exists adjacent to the roadway) where an alternate route of 16'-0" is available or has been designated. Bridges located over Special Routes in Highly Urbanized Areas can be found on the MDOT website at: http://mdotcf.state.mi.us/public/design/files/englishbridgemanual/Exempt_Structures.pdf. (5-28-2013)

Ramps and roadways connecting a Special Route and a 16'-0" route require a vertical clearance minimum of 14'-6" (14'-9" desired). Ramps and roadways connecting two 16'-0" routes require a vertical clearance minimum of 16'-0" (16'-3" desired). (8-20-2009)

4R = Reconstruction

Information on the NHS systems can be obtained by contacting the Statewide Planning Section, Bureau of Transportation Planning or found on the MDOT website at: http://www.michigan.gov/mdot-nfc (11-28-2011)

Pedestrian bridges are to provide 1'-0" more underclearance than that required for a vehicular bridge. For Freeways (Interstate and non Interstate), including Special Route Freeways, the desired underclearance shall be 17'-3" (minimum 17'-0"). (11-28-2011)

A vertical underclearance of 23'-0" is required for highway grade separations over railroads when constructing a new bridge or removing the existing superstructure. For preventative maintenance, rehabilitation and deck replacement projects the existing railroad vertical underclearance does not need to be increased unless requested by the Railroad. (11-28-2011)

Clearance signs are to be present for structures with underclearance of 16'-0" or less (show dimensions 2" less than actual). See http://mdotcf.state.mi.us/public/tands/plans.cfm for additional information and guidelines. (11-28-2011) (11-21-2013)