MICHIGAN
DEPARTMENT OF TRANSPORTATION

2020
STANDARD
SPECIFICATIONS
FOR
CONSTRUCTION

DRAFT – July 2020

MICHIGAN
DEPARTMENT OF TRANSPORTATION

LANSING, MICHIGAN

Transportation Comission:

Todd A. Wyett, Chairman
Michael D. Hayes
George K. Heartwell
Stephen F. Adamini
Chirs J. Yatooma
Helen Zeerip

Paul C. Ajegba, Director

July 21, 2020

The following MDOT publications are included by reference in the 2020 Standard Specifications for Construction as if they were repeated herein in their entirety. In the case of a conflict between the publications below and the 2020 Standard Specifications for Construction, the 2020 Standard Specifications for Construction will have precedence.

MDOT Geotechnical Manual
Materials Quality Assurance Procedures Manual
Structural Fabrication Quality Manual
Michigan Manual on Uniform Traffic Control Devices
Michigan Test Methods
Procedures for Aggregate Inspection
Procedures Manual for Mix Design Processing
Road and Bridge Standard Plans
HMA Production Manual
Soil Erosion and Sedimentation Control Manual
Density Testing and Inspection Manual
Work Zone Safety and Mobility Manual

Copies of these standard specifications and publications are available through the MDOT Publications Office by telephone (517-322-1676) or by e-mail (MDOT-Publications@michigan.gov)

FOREWORD

The 2020 Standard Specifications for Construction is the standard for the basic requirements governing the materials, equipment and methods used in construction contracts administered by the Michigan Department of Transportation.

General Chair – Jason Gutting
Engineer of Specifications – David Pawelec

Division 1 General Provisions – Co-chairs: Matt Begowan, Matt Chynoweth, Jason Gutting

James Shell – Attorney General
Mark Shulick – Design
Brian Ulman – Bay
Gerard Pawlowki – Metro
RJ Meyers – University
Glenn Bukoski – MITA
Tom Byle – CRA
Larry Strzalka – Contract
David Pawelec – Design
Leo Evans – Grand
Kenton McAndrew – Southwest
Jim Gaus – Safety and Security
Kurt Zachary – FHWA

Division 2 Earthwork Co-chairs: Dave Gauthier, Jim Siler

Nathan Fettes – Design
Karl Datema – Grand
Ruth Hepfer – FHWA
Keith Brown – Bay
Steve Griffith – Metro
Terry Palmer – CRA

Division 3 Bases – Co-chairs: Mike Eacker, Mike Grazioli

Eric Murray – CFS
Tom Fox – Grand
Al Anderson – Superior
Jerry Jehle – CRA
David LaCross – Design
Chris James – Metro
Jeff Forster – FHWA

Division 4 Drainage – Co-chairs: Janine Cooper, Hal Zweng

Dave Gauthier – CFS
Taylor Snow – Design
Julie Townsend – Design
Mark Lewis – FHWA
Pete Jansson – Operations
Therese Kline – Design
Drew Senters – Southwest
Doug Mills – CRA

Division 5 HMA Pavements and Surface Treatments – Co-chairs: Kevin Kennedy, Wil Thompson

Marc Beyer – CFS
Andrew Block – Design
Mike Hiess – Grand
Ken Koepke – University
Jeff Kocsis – CRA
Rob Green – CFS
Duane Maas – Bay
Kim Mullins – North
Jeff Forster – FHWA

Division 6 Portland Cement Concrete for Pavements – Co-chairs: Greg Losch, John Stanton

Andy Bennet – CFS
Mike Phillips – Bay
Hunter Hinchcliff – Metro
Jeff O'Brien – CRA
Tom Tellier – Grand
Jeff Forster – FHWA

Division 7 Structures Co-chairs: John Belcher, Brad Wagner

Scott Hobner – Operations
Matt Filcek – Operations
Talia Belill – Design
Johnathon Stratz – Design
Steven Katenhus – Bay
Greg Losch – University
Mark Lewis – FHWA
Bryon Beck – Operations
Jeff Weiler – Operations
Clint Mayoral – Design
Jennifer Transue – Design
Bill Erben – Metro
Aaron Hengesbach – University
Wayne Harrell – CRA

Divison 8 Incidental Construction – Co-chairs: Mark Bott, Gregg Brunner

Carlos Libiran – Design
Dave LaCross – Design
Traci Paige – Bay
Jason Fossitt – University
Jim Gaus – Safety and Security
Mike Torres – CRA
Julie Townsend – Design
Ray Olsen – Design
Bob Otremba – Bay
Jen Foley – University
Rob Fijol – FHWA

Division 9 Materials – Co-chairs: Pete Jansson, Tim Stallard

Dan Troia – CRA

Division 10 Concrete Mixtures – Co-chairs: Pete Janssen, Tim Stallard

Greg Brunner, Engineer of Construction Technology
Brad Weiferich, Bureau of Development
Tony Kratofil, Chief Operating Officer

The time and effort contributed by members of the specification committees representing the Michigan Infrastructure and Transportation Association, Asphalt Paving Association of Michigan, Michigan Concrete Association, Michigan Aggregates Association, Michigan Road Preservation Association, and Associated Consulting Engineers Council are also appreciated.

Paul C. Ajegba, Director
Michigan Department of Transportation

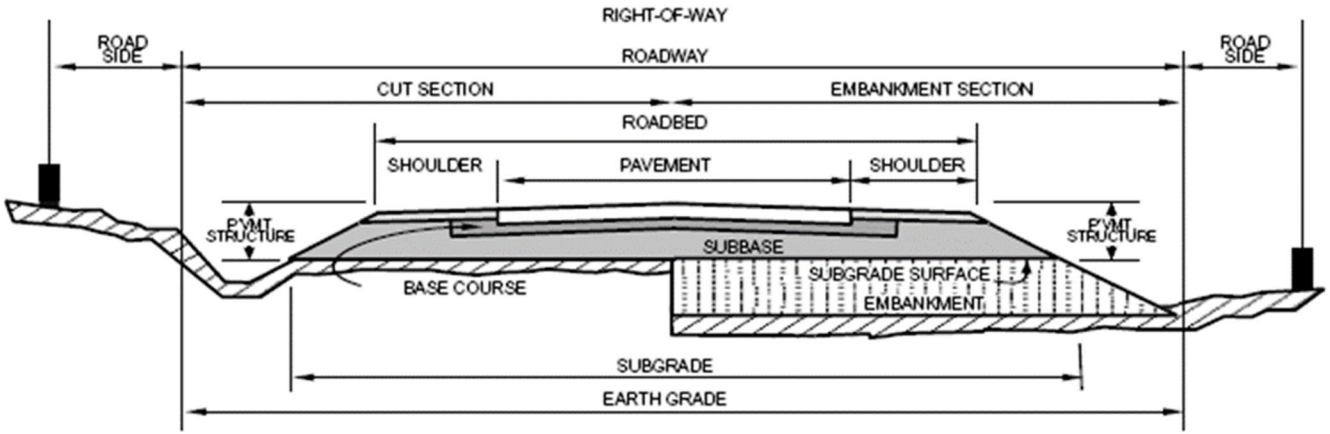

Roadway Nomenclature

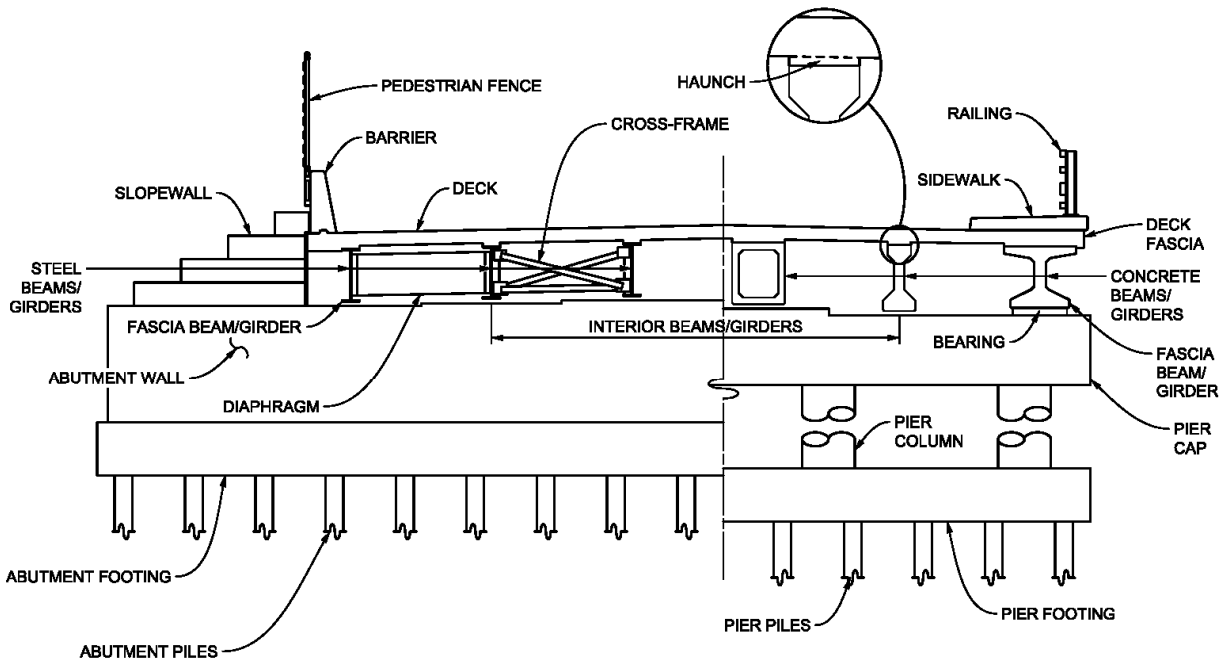

Bridge Nomenclature

DRAFT – July 2020

TABLE OF CONTENTS

Section	Title	Page No.
Division 1	***General Provisions***	**XX**
101	Terms, Format, and Definitions	XX
102	Bid Submission, Award, and Execution of Contract	XX
103	Scope of the Work	XX
104	Control of the Work	XX
105	Control of Materials	XX
106	Reserved	XX
107	Legal Relations and Responsibilities to the Public	XX
108	Prosecution and Progress	XX
109	Measurement and Payment	XX
110	Mobilization	XX
Division 2	***Earthwork***	**XX**
201	Clearing	XX
202	Removing Trees, Stumps, and Corduroy	XX
203	Removing Drainage Structures, Culverts, and Sewers	XX
204	Removing Miscellaneous Structures and Materials	XX
205	Roadway Earthwork	XX
206	Excavation and Backfill for Structures	XX
207	Obliterating Roadway	XX
208	Soil Erosion and Sedimentation Control	XX
209	Project Cleanup	XX
Division 3	***Bases***	**XX**
301	Subbase	XX
302	Aggregate Base Course	XX
303	Open-Graded Drainage Courses	XX
304	Rubblizing Portland Cement Concrete Pavement	XX
305	HMA Base Crushing and Shaping	XX
306	Aggregate Surface Course and Maintenance Gravel	XX
307	Aggregate Shoulders and Approaches	XX
308	Geosythetics for Base	XX

Division 4 ***Drainage Features*** ..... **XX**
401 Pipe Culverts XX
402 Storm Sewers XX
403 Drainage Structures XX
404 Underdrains XX
405 Pump Station Construction XX
406 Precast Three-Sided, Arch, and Box Culverts XX

Division 5 ***Hot Mix Asphalt Pavements & Surface Treatments*** ..... **XX**
501 Plant Produced Hot Mix Asphalt XX
502 HMA Crack Treatment XX
503 Paver Placed Surface Seal XX
504 Micro-Surfacing XX
505 Chip Seals XX
506 Slurry Seal XX

Division 6 ***Portland Cement Concrete Pavements*** ..... **XX**
601 Reserved XX
602 Concrete Pavement Construction XX
603 Concrete Pavement Restoration XX

Division 7 ***Structures*** ..... **XX**
701 Reserved XX
702 Reserved XX
703 Reserved XX
704 Steel Sheet Piling and Cofferdams XX
705 Foundation Piling XX
706 Structural Concrete Construction XX
707 Structural Steel Construction XX
708 Structural Prestressed Concrete Construction XX
709 Timber Structures XX
710 Waterproofing and Protective Covers XX
711 Bridge Railings XX
712 Bridge Rehabilitation – Concrete XX
713 Bridge Rehabilitation – Steel XX
714 Temporary Structures and Approaches XX
715 Cleaning and Coating Existing Structural Steel XX
716 Shop Cleaning and Coating Structural Steel XX
717 Downspouts and Drains XX
718 Drilled Shafts XX

DRAFT – July 2020

Division 8 ***Incidental Construction*** ..... **XX**
801 Concrete Driveways XX
802 Concrete Curb, Gutter, and Dividers XX
803 Concrete Sidewalk, Curb Ramps, and Steps XX
804 Concrete Barriers, Glare Screens, and Foundations for Light Standards and Sign Supports XX
805 Hot Mix Asphalt Curb XX
806 Shared Use Paths XX
807 Guardrail, Guardrail Terminals, and Miscellaneous Posts XX
808 Fencing XX
809 Field Office XX
810 Permanent Traffic Signs and Supports XX
811 Permanent Pavement Markings XX
812 Temporary Traffic Control for Construction Zone Operations XX
813 Slope Protection XX
814 Paved Ditches XX
815 Landscaping XX
816 Turf Establishment XX
817 Reserved XX
818 Electrical XX
819 Lighting XX
820 Traffic Signals XX
821 Preservation of Boundary Monuments XX
822 Shoulder and Centerline Pavement Corrugations XX
823 Water Mains XX
824 Construction Surveying and Staking XX
825 Sanitary Sewer Systems XX

Division 9 ***Materials*** ..... **XX**
901 Cement and Lime XX
902 Aggregates XX
903 Admixtures and Curing Materials for Concrete XX
904 Asphaltic Materials XX
905 Steel Reinforcement XX
906 Structural Steel XX
907 Fencing Materials XX
908 Miscellaneous Metal Products XX
909 Drainage Products XX
910 Geosynthetics XX
911 Water XX
912 Timber and Lumber XX
913 Masonry Units XX

914 Joint and Waterproofing Materials XX
915 Bridge Coating Systems XX
916 Erosion and Sedimentation Control Materials XX
917 Turf and Landscaping Materials XX
918 Electrical and Lighting Materials XX
919 Permanent Traffic Sign and Support Materials XX
920 Permanent Pavement Marking Materials XX
921 Permanent Traffic Signal Materials XX
922 Temporary Traffic Control Materials XX
923 Water Main Materials XX

***Division 10 Concrete Mixtures* ..... XX**
1001 Concrete Production Equipment and Facilities XX
1002 Contractor Quality Control for Concrete XX
1003 Quality Assurance (Acceptance) for Concrete XX
1004 Portland Cement Concrete Mixtures XX
1005 Mortar and Grout Mixtures XX
1006 Patching, Repair, and Overlay Mixtures XX

***Pay Item Index* ..... XX**
***General Index* ..... XX**

DRAFT – July 2020

DIVISION 1 – GENERAL PROVISIONS

Section	Title	Page No.
101	Terms, Format, and Definitions	XX
102	Bid Submission, Award, and Execution of Contract	XX
103	Scope of the Work	XX
104	Control of the Work	XX
105	Control of Materials	XX
106	Reserved	XX
107	Legal Relations and Responsibilities to the Public	XX
108	Prosecution and Progress	XX
109	Measurement and Payment	XX
110	Mobilization	XX

DRAFT – July 2020

NOTES

Section 101. TERMS, FORMAT, AND DEFINITIONS

101.01. General. The titles and headings of the sections, subsections, and subparts are intended for reference and are not considered as bearing on their interpretation.

References within the contract to publications refer to the most recent edition, including interim publications that are current as of the advertisement date, unless otherwise specified by the contract.

References within the contract to the Department's procedures for inspection, sampling, testing, and certification of materials refer to the edition of the relevant manuals, MTMs, Standard Plans and Standard Specifications that are current as of the advertisement date, unless otherwise specified by the contract.

Whenever the following abbreviations, terms or pronouns are used in the specifications or in other contract documents they have the following meaning.

101.02. Abbreviations.

Abbreviation	Long Form
AAN	American Association of Nurserymen
AAR	Association of American Railroads
AASHTO	American Association of State Highway and Transportation Officials
ACI	American Concrete Institute
ACPA	American Concrete Pipe Association
AGC	Associated General Contractors of America
AIA	American Institute of Architects
AISC	American Institute of Steel Construction
AISI	American Iron and Steel Institute
ANSI	American National Standards Institute, Inc.
APA	Authorized Public Agency
API	American Petroleum Institute
ARA	American Railway Association
AREMA	American Railway Engineering and Maintenance of Way Association
ARTBA	American Road and Transportation Builders' Association
ASCE	American Society of Civil Engineers
ASLA	American Society of Landscape Architects
ASME	American Society of Mechanical Engineers
ASNT	American Society for Non Destructive Testing
ASTM	American Society for Testing and Materials
ATSSA	American Traffic Safety Services Association
AWPA	American Wood Preservers' Association
AWS	American Welding Society
AWWA	American Water Works Association

CFR..... Code of Federal Regulations
CIA.....Construction Influence Area
CRSI ..... Concrete Reinforcing Steel Institute
DBE.....Disadvantaged Business Enterprise
FHWA ..... Federal Highway Administration, U.S. Department of Transportation
FSS ..... Federal Specifications and Standards
ICEA..... Insulated Cable Engineers Association
IEEE.....Institute of Electrical and Electronics Engineers
IES .....Illuminating Engineering Society
ITS ..... Intelligent Transportation System
IMSA .....International Municipal Signal Association
ISSA.....International Slurry Surface Association
ITE ..... Institute of Traffic Engineers
MCL .....Michigan Compiled Laws
MDARD…… Michigan Department of Agriculture and Rural Development
MDEGLE.....Michigan Department of Environment, Great Lakes, and Energy
MDLARA ..... Michigan Department of Licensing and Regulatory Affairs
MDNR .....Michigan Department of Natural Resources
MDOT .....Michigan Department of Transportation
MIOSHA..... Michigan Occupational Safety and Health Administration
MMUTCD .....Michigan Manual of Uniform Traffic Control Devices
MQAP .....Materials Quality Assurance Procedures
MSA ..... Mine Safety Administration
MSA ..... Michigan Statutes Annotated (number always follows)
MTM.....Michigan Test Method
NEC .....National Electrical Code
NELMA.....Northeastern Lumber Manufacturers' Association
NEMA..... National Electrical Manufacturers' Association
NESC ..... National Electrical Safety Code
NHPMA ..... Northern Hardwood and Pine Manufacturers' Association
NIST ..... National Institute of Standards and Technology
NPCA ..... National Precast Concrete Pipe Association
NPDES.....National Pollutant Discharge Elimination System
NRMCA.....National Ready Mixed Concrete Association
OJT .....On-The-Job Training Program
PCI ..... Precast/Prestressed Concrete Institute
QPL.....Qualified Products List
RCRA.....Resource Conservation and Recovery Act
SAE.....Society of Automotive Engineers
SPIB..... Southern Pine Inspection Bureau
SSPC .....The Society for Protective Coatings
USDA ..... United States Department of Agriculture
UL .....Underwriter's Laboratories, Inc.
WCLIB..... West Coast Lumber Inspection Bureau

WWPA .....Western Wood Products Association

101.03. Definitions.

Absolute Refusal. The nominal pile driving resistance value of 150 percent of the nominal pile driving resistance shown on the plans.

Addendum. Revisions to the plans and/or proposal issued by the Department after the advertisement date but before the submission of the bid.

Adjustment. A monetary revision that applies to a contract unit price or to the entire contract.

Advertisement. The public announcement of a project inviting Contractors to submit bids for work to be performed and materials to be furnished.

Authorization. The Department's written approval of a contract modification.

Average Daily Traffic (ADT). The total volume of traffic during a given time period, greater than one day and less than one year, divided by the number of days in the time period.

Award. The Department's formal execution of the contract.

Base Course. The layer or layers of specified material placed on a subbase or subgrade to support a surface course.

Bid. A completed schedule of items submitted as an offer to perform work at quoted prices.

Bid Appeal Committee. A MDOT committee that performs the administrative review of appeals of low bid rejections.

Bid Document. An electronic document prepared using current Department software, which includes the schedule of items, designated and specialty Items, if applicable, and warranty obligations, if applicable.

Bid Guaranty. An amount the bidder agrees to pay to MDOT, at the time of bid submission, if the bidder fails to execute the contract form and file satisfactory bonds and other required documents necessary for award of the contract within the 28-day period provided or within Department approved extensions.

Bid Review Committee. A MDOT committee that reviews irregular bids for adherence to standard bid procedures.

Bidder.

A. The individual or legal entity submitting a bid.

B. An affiliated bidder is a bidder having a relationship where one business concern or individual directly or indirectly controls or can control the others.

Bridge. A structure, including supports, built over a depression, watercourse, highway, railroad or other obstruction, with a clear span of at least 20 feet, measured along the center of roadway.

Calendar Day. Every day shown on the calendar, beginning and ending at midnight. Unless otherwise specified in the contract, the word "day" means calendar day.

Calendar Date Contract. A contract where the project is required to be physically complete or open to traffic on or before a designated date on the calendar.

Calendar Day Contract. A contract where the time required to physically complete the project, or open it to traffic, is designated by the number of calendar days.

Certification of DBE Contractors. The process by which the Department establishes that a Contractor meets the Federal requirements as a DBE.

Change. Addition to or deletion from a pay item or condition.

Commission. The Michigan State Transportation Commission.

Construction Influence Area (CIA). The project and the area surrounding the project, as shown in the contract, which defines the limits of responsibility for traffic control.

Contract. The written agreement between the Department and the Contractor setting forth the obligations of the parties for the performance of and payment for the prescribed work. The contract includes the advertisement for bids, bid document, contract form, contract bonds, standard specifications, special details, standard plans, plans, proposal, addenda, notice of award, local agency agreements (when applicable), DBE commitment forms (when applicable), and warranty forms and bonds (when applicable).

Contract Modification. The regulation form prepared as a recommendation for changes in, adjustments or extras to the contract. The contract modification becomes an authorization when signed by the duly authorized MDOT representative.

Contract Time. The time assigned in the contract to perform and complete all the work, including authorized extensions of time.

Contract Unit Price. The unit price of a pay item.

Contractor. The individual or legal entity contracting with the Department for performance of prescribed construction work and supplying materials.

Controlling Operation. An operation that, if the Contractor's expected rate of performance is not met or the scheduled start date is delayed, would delay the opening to traffic or completion of the entire project. The operation may be on or off the job site. The size of the operation is not a factor.

Coordination Clause. A clause in the contract that requires the Contractor to coordinate construction activities with other agencies, utilities, or Contractors.

Critical Path. The longest continuous path of activities through the contractual completion milestones in the schedule that establishes the scheduled completion date. The critical path is typically the path of activities with the least total float. The critical path may follow different paths of activities at different times during the performance of the work due to the progress of the work or revisions made to the schedule. Any operation on the critical path is a controlling operation.

Culvert. A structure, including supports, built over a depression, watercourse, highway, railroad, or other obstruction, with a clear span of less than 20 feet measured along the center of roadway.

Department.

A. The Michigan Department of Transportation, when the State is the awarding authority;

B. The Board of County Road Commissioners or the County of Wayne, when a County is the awarding authority; or

C. The City or Village or authorized representative, when the City or Village is the awarding authority.

Design Pile Length. The pile length shown on the plans.

Design Pile Tip Elevation. The pile tip elevation if the design pile length is shown on the plans.

Designated Classifications. Work classifications that the Department lists in the proposal as the major work classifications required to construct the project, requiring appropriate prequalification to perform the specified work.

Determined Low Bidder. The bidder who is determined to have the lowest total bid on a project that meets all necessary requirements.

Director. The person, as provided by law, to serve as the principal executive officer of the Department and responsible for executing the policy of the Commission.

Disadvantaged Business Enterprise. The definition as provided in 49 CFR Part 26.

Dynamic Formula. Empirical formula to estimate nominal pile driving resistance during pile driving. The FHWA Gates formula is specified.

Dynamic Testing. High strain dynamic testing during pile driving to estimate nominal pile driving resistance using instrumentation and signal-matching computer software.

Earth Grade. The elevation of the completely graded roadway before placing the pavement structure.

Engineer.

A. The Director of the Department or the Engineer designated by the Director, acting directly or through authorized representatives, who is responsible for engineering supervision of the construction, when the State is the awarding authority;

B. The Engineer representing the County, when the County is the awarding authority; or

C. The Engineer representing the City or Village, when the City or Village is the awarding authority.

Estimate.

A. **Final Estimate.** The compilation of quantities showing work performed; upon which final payment is made.

B. **Progress Estimate.** An estimate made as the work progresses showing estimated work performed and materials furnished; upon which periodic payments are made.

Estimated Pile Length. The length shown on the plans used as a guide for estimating the work and ordering test piles if the nominal pile driving resistance is shown on the plans.

Estimated Pile Tip Elevation. The elevation shown on the plans, estimated for piles to develop the nominal pile driving resistance.

Extension of Time. Additional contract time authorized by the Department.

Extra Work. All work determined to be essential to the satisfactory completion of the contract. This work did not appear in the proposal as a specific pay item and was not included in the price bid for other items in the contract.

Falsework. Any temporary facility/device used to support the permanent structure until it becomes self-supporting. Falsework would include, but not be limited to, steel or timber beams, girders, columns, piles and foundations, and any propriety equipment including modular shoring frames, post shores, and adjustable horizontal shoring.

Float. The total available time to complete a non-controlling operation or sequence of non-controlling operations, as designated by the Contractor in the progress schedule, minus the total planned duration associated with the non-controlling operation or sequence of non-controlling operations. Float within the schedule is not for the exclusive use or benefit of the Department or the Contractor, but is a resource available to both parties as needed until it expires.

Forms. A facility, device, or mold used to retain plastic or fluid concrete in its designated shape until it hardens.

Geohazard. A harmful event caused by a geological process, for example an earthquake, a landslide, a tsunami, or a volcano.

Grade Separation. A structure that provides for highway traffic, pedestrian traffic, or utilities to pass over or under another highway or the tracks of a railway.

Highway. A general term denoting a public way for purposes of vehicular travel, including the entire area within the right-of-way.

Holidays. Recognized State holidays are: New Year's Day, Martin Luther King Day, President's Day, Memorial Day, Independence Day, Labor Day, Veteran's Day, Thanksgiving Day, the day after Thanksgiving Day, Christmas Eve, Christmas Day, and New Year's Eve.

Inspector. The representative of the Engineer assigned to test materials, make inspections of contract performance, or both.

Laboratory. A testing laboratory operated by or designated by the Department.

Labor Dispute. A controversy between the Contractor and the Contractor's employees, union, bargaining agents, suppliers, or suppliers' bargaining agents, or between unions that results in a work stoppage.

Lien Bond. The security furnished by the Contractor and the Contractor's Surety to guarantee payment of the debts covered by the bond.

Limits of Earth Disturbance. Area extending 10 feet outside the slope stake line except adjacent to wetlands where the limits of earth disturbance is at the slope stake line.

Liquidated Damages. Monetary damages paid at a specified rate by the Contractor to the Department for work not completed by the completion dates or within specified time frames.

Local Traffic. Traffic that has origin or destination within the CIA.

Major and Minor Pay Item. Pay items having an original item value that meets any of the criteria herein are considered major pay items. All other original pay items are considered minor. The original item value is the product of the plan quantity of the pay item and the contract unit price.

A. The original contract amount is less than or equal to $5,000,000 and the original item value is equal to or greater than 5 percent of the original contract amount.

B. The original contract amount is greater than $5,000,000 but less than or equal to $20,000,000 and the original item value is equal to or greater than 4 percent of the original contract amount but not less than $250,000.

C. The original contract amount is greater than $20,000,000 but less than or equal to $30,000,000 and the original item value is equal to or greater than 3 percent of the original contract amount but not less than $800,000.

D. The original contract amount is greater than $30,000,000 and the original item value is equal to or greater than 2 percent of the original contract amount but not less than $900,000.

E. If no major pay items are identified using the criteria in A through D above, then the major item or items are all of the original pay items, in sequence from the greatest original item value to the next lower item value and so on, until the total original value of the items adds up to 60 percent of the original contract amount.

Materially Unbalanced Bid. A bid that generates a reasonable doubt that award to the bidder submitting the mathematically unbalanced bid will not result in the lowest ultimate cost to the Department.

Mathematically Unbalanced Bid. A bid containing lump sum or unit price bid items that do not reflect reasonable actual costs of labor, equipment, materials, plus a reasonable proportionate share of the bidder's anticipated profit, overhead costs and other indirect costs.

Maximum Unit Weight or Maximum Density. The maximum value of the weight per unit volume established for a material.

Median. The portion of a divided highway separating the traveled ways.

Michigan Register Service Agency. The definition as provided in MCL 290.602.

Minimum Pile Length. The length between pile cutoff elevation and minimum pile penetration elevation shown on the plans.

Minimum Pile Penetration Elevation. The elevation shown on the plans that the bottom of piles must be driven to, or below.

Net Prequalification. The current balance of the Bidder's established prequalification rating. This is obtained by subtracting the uncompleted work on hand from the established rating.

Nominal Pile Driving Resistance. Nominal pile driving resistance measured during pile driving with the dynamic formula or dynamic testing methods in kips, as shown on the plans.

Non-Controlling Operation. An operation that, if the Contractor's expected rate of performance is not met or the scheduled start date is delayed, would not delay the opening to traffic or completion of the entire project. The operation may be on or off the project site. The size of the operation is not a factor.

Notice of Award. Written notice to the Contractor that the contract has been awarded.

OJT Program. MDOT's OJT program meets the requirements of the Federal-Aid Highway Act of 1970 and 23 CFR (Code of Federal Regulations) Part 230, Subpart A. The objective is to develop skill improvement programs to provide opportunities for unskilled workers, particularly minorities, women, and disadvantaged persons, to acquire training in the skilled construction trades.

Ordered Pile Length. For timber piles, the Engineer will determine the ordered length. For cast-in-place concrete piles and steel piles, the Contractor will determine the ordered length.

Pay Item. An item of work in the contract.

Pavement Structure. All combinations of subbase, base course, and surface course, including shoulders, placed on a subgrade.

Performance Bond. The security furnished by the Contractor and the Contractor's Surety to guarantee performance of the work in accordance with the contract.

Plan Grade. Vertical control grade shown on plans.

Plan Quantity. The original contract quantity of a pay item.

Plans. The contract drawings that show the location, character, and dimensions of the prescribed work. Contract drawings also include the standard plans.

Practical Refusal. A nominal pile driving resistance value of 110 percent of the nominal pile driving resistance shown on the plans.

Prebore Elevation. The elevation designated for stopping preboring, as shown on the plans.

Prequalification of Contractors. A process used by the Department to determine the work classifications a Contractor is eligible to perform and the maximum contract amount that the Contractor's resources enables it to manage. This is done in accordance with the "Administrative Rules Governing the Prequalification of Bidders for Highway and Transportation Construction Work."

Production Piles. Piles other than test piles.

Progress Clause. A part of the proposal stating the starting date; all intermediate and completion dates or the, number of work days, or both; and other restrictions or conditions.

Progress Schedule. A sequential listing of all the controlling operations and the estimated time the operations will remain controlling. The progress schedule is submitted by the Contractor after award and prior to starting work. It is reviewed and approved by the Engineer.

Project. A specific section of the highway or property on which the construction operation is to be performed as described in the contract.

Project Limits. The physical limits given in the contract showing the points of beginning and ending of the work included in the project.

Proposal. A document containing information regarding the project being advertised for bid. The information includes the location and description of work, schedule of items, progress clause, bid guaranty amount, date and time for electronic submission and downloading of bids, special provisions, supplemental specifications or other requirements that may vary from or are not contained in the standard specifications or plans, and the applicable wage rates to be paid by the bidder.

Qualified Products List. A listing of specific materials that have been prequalified for use on projects.

Redrive. Pile driving beyond 3 inches or beyond the first 20 blows, whichever occurs first, after the end of drive.

Restrike. Pile driving to move the pile an additional 3 inches or the first 20 blows, whichever occurs first, after the end of drive.

Right-of-Way (ROW). A general term denoting land, property or interest therein acquired for or devoted to a highway, as shown on the plans.

Roadbed. The portion of the roadway between the outside edges of finished shoulders, or the outside edges of berm immediately back of curbs or gutters, when constructed.

Roadside. The portion of the right-of-way outside of the roadway.

Roadway. The portion of the right-of-way required for construction, limited by the outside edges of slopes and including ditches, channels, and all structures pertaining to the work.

Seasonal Limitation. The time during which construction of work items will be suspended unless otherwise specified in the contract.

Seasonal Suspension. The period of time of November 15 through April 15 unless otherwise specified in the contract.

Segregation. Areas of non-uniform distribution of material components that are visually identifiable or can be determined by other methods.

Shoulder. The portion of the roadway adjacent to the traveled way for accommodation of stopped vehicles, for emergency use, and for lateral support of base and surface courses.

Sidewalk. That portion of the roadway primarily constructed for pedestrian use.

Specialty Classifications. Work classifications that the Department considers, to require specialized equipment or crafts to an extent warranting being listed separately from the designated classification in the proposal.

Specifications. A general term applied to all written directions, provisions, and requirements concerning the performance of the work.

A. **Standard Specifications.** All requirements and provisions contained in this book.

B. **Supplemental Specifications.** Detailed specifications that modify and supersede the Standard Specifications.

C. **Special Provisions.** Detailed specifications that modify and supersede the Standard and Supplemental Specifications applicable to an individual project.

Spuds. Short, strong, driven members, removed to make holes for inserting piles.

Standard Plans. Drawings approved for repetitive use, showing details to be used where appropriate. The standard plans that apply to the project will be designated in the contract.

State.

A. The State of Michigan or the Michigan Department of Transportation Department, or both, when the State is the awarding authority;

B. The County, when a County is the awarding authority; or

C. The Municipality, when a City or Village is the awarding authority.

Station. When used as a definition or term of measurement, will be 100 feet.

Subbase. The layer of specified material placed on the subgrade as a part of the pavement structure.

Subcontractor. The individual or legal entity that performs part of the work through a contract agreement with the Contractor.

Subcontract. The written agreement between the Contractor and any individual or legal entity to perform a part of the contract work.

Subgrade. The portion of the earth grade upon which the pavement structure is placed.

Substructure. All of the structure below the bearings of simple and continuous spans, the skewbacks of arches, and the tops of footings of rigid frames, including backwalls, wingwalls, and wing protection railings; except backwalls designed integrally with the superstructure.

Superstructure. All of a structure not classified as substructure.

Surety. The legal entity or individual other than the Contractor, executing a bond(s) furnished by the Contractor.

Surface Course. The top layer of a pavement structure.

Temporary Road. A roadway and appurtenances constructed to help the movement of highway and pedestrian traffic around a construction operation.

Temporary Route. An existing road over which the traffic is temporarily detoured around a construction operation.

Temporary Structure. A bridge, culvert, or grade separation constructed to maintain traffic during the construction or reconstruction of a bridge, grade separation, or culvert.

Test Pile. A pile driven at a location shown on the plans to determine pile driving characteristics. The Engineer will certify nominal pile resistance of a test pile using a static load test, dynamic formula, or dynamic testing methods.

Ton. A unit of weight equal to 2000 pounds.

Traffic Control Devices. Signs, signals, lighting devices, barricades, delineators, pavement markings, traffic regulators and all other equipment for protecting and regulating traffic in accordance with the MMUTCD, unless otherwise specified in the contract.

Traffic Lane. The portion of the traveled way used for the movement of a single line of vehicles.

Traffic Regulator. A person assigned to direct traffic, dressed and equipped as specified in the MMUTCD.

Traveled Way. The portion of the roadway designated for the movement of vehicles, exclusive of shoulders and auxiliary lanes.

Utility(ies). Properties of railway, telegraph, telephone, water, sewer, electric, gas, petroleum, cable television, and similar companies.

Waters of the State. Groundwaters, lakes, impoundments, open drains, rivers, wetlands, streams and all other watercourses and waters, including the Great Lakes and their connecting waters, within the jurisdiction of Michigan.

Work. The furnishing of all labor, materials, equipment, and other items necessary to complete the project according to the contract. This includes all alterations, amendments or extensions thereto, made by work order or other written orders of the Engineer.

Work Day (Working Day). All days when, as determined by the Engineer, it is possible for the Contractor to effectively carry out work on the controlling operation.

Work Day Contract. A contract where the time required to physically complete the project or open it to traffic is designated by the number of work days.

Working Drawings. Supplemental design sheets or similar data that the Contractor may be required to submit to the Engineer. Examples of these include, but are not limited to, design calculations, stress sheets, shop drawings, erection plans, falsework plans, framework plans, cofferdam plans, and bending diagrams for reinforcing steel.

Work Order. A written order by the Engineer requiring performance by the Contractor.

Section 102. BID SUBMISSION, AWARD, AND EXECUTION OF CONTRACT

102.01. Prequalification of Bidders. Unless otherwise provided, Bidders must be prequalified for the categories of work on which they submit a bid. A Bidder's net prequalification must be equal to or greater than that required for the proposed contract. When required in the proposal, the Bidder must designate other prequalified Contractors to whom they will subcontract those categories of work for which they lack prequalification.

102.02. Contents of Proposal. The plans, specifications, and other documents designated in the proposal are considered part of the proposal whether attached or not.

102.03. Interpretation of Bid Items in the Proposal. The Department will use estimated quantities in the schedule of items to compare bids.

102.04. Examination of Plans, Proposal, and Work Site. Prior to submitting a bid, the Bidder must:

A. Examine the proposal, plans, and the work site to understand the local conditions affecting the work and the detailed requirements of construction.
B. Upon discovery of uncertainties, inconsistencies, errors, omissions, or conflicts during the examination of the proposal, plans and work site, notify the Department representative identified in the proposal using Department-approved procedures.
C. Be familiar with all requirements of federal, state, and local laws, ordinances, and permits that may directly, or indirectly, affect performance of the work.

The Department considers the submission of a bid as prima facie evidence that the Bidder examined the proposal, plans, and the project site, and understands the requirements of the proposal package and conditions at the project site.

The Bidder must not take advantage of errors or omissions in the proposal that could make the bid mathematically or materially unbalanced. Failure to notify the Department of errors and omissions may result in the Department's rejection of the bid, reduction in or suspension of the Bidder's prequalification, or both.

102.05. Preparation of Bid. The bid must be prepared using current Department software and in accordance with current Department procedures.

The Bidder must include, and will be deemed to have included, in its bid and contract price all applicable taxes that have been enacted into law as of the date the bid is submitted.

102.06. Irregular Bids. By submitting a bid, the Bidder agrees to the Department's procedures and standards for accepting or rejecting irregular bids. Unless the proposal modifies this subsection, the Department will take the following actions for irregular bids.

A. The Department will consider a bid irregular and will reject it for any of the following reasons:

1. The bid does not contain a unit price for each pay item listed in the unit prices column or lump sum price in the bid amounts column, as applicable. While a blank space is unacceptable, the explicit quotation of zero does constitute a price and, if awarded the contract, the Bidder would be bound to perform that pay item for zero payment and to do so to the same extent as if a positive numeric price had been quoted.
2. All addenda issued for the contract have not been acknowledged into the bid as submitted.
3. The bid is not electronically submitted by an authorized representative of the Bidder who has been designated in writing in accordance with current Department procedures.
4. The Bidder, except as otherwise provided in this subsection, is not prequalified or has insufficient prequalification for the specified category(s) of work required for the purposes of submitting a bid.
5. The Department finds evidence of collusion.

B. The Department will consider a bid irregular and may reject it for any of the following reasons:

1. There is an unauthorized addition, deletion, or alteration to the bid.
2. There is an unauthorized alternate bid or conditional bid.
3. There is an irregularity of any kind that makes the bid incomplete, indefinite, or ambiguous as to its meaning.
4. The bid fails to comply with any other bid requirement.
5. Any provision is added to the bid reserving the right, for the Bidder, to accept or reject an award of the contract.
6. The bid is mathematically unbalanced. The Department will perform further analysis to determine whether the bid is also materially unbalanced. Decisions to accept or reject a materially unbalanced bid will be made in accordance with Department procedures and the Department's best interest.
7. Affiliated Bidders submit bids on the same contract.

C. The Department may waive irregularities in accordance with subsection 102.06.B and accept the lowest qualified bid whenever the considerations set forth in this subsection do not justify rejection of the bid. In determining whether to waive an irregularity and accept a bid, the Department will consider whether the nature or extent of the irregularity is such that acceptance of the bid might:

1. Confer on the Bidder an unfair advantage or possibility for bid manipulation;
2. Jeopardize funding for the contract;
3. Impose unreasonable administrative burdens on the Department; or otherwise
4. Undermine the integrity of a fair, open, and honest competitive bidding process.

If the irregularity will not result in any of the conditions listed under subsection 102.06.C, the Department may accept the bid and allow the Bidder to remedy the irregularity. In remedying the irregularity, the Bidder must not increase or decrease any unit price bid.

Only a Bidder whose bid has been rejected pursuant to this subsection and who would otherwise be the lowest Bidder has an opportunity to appeal a proposed rejection in accordance with subsection 102.11 and subsection 102.12. Once all administrative appeals are exhausted under subsection 102.11 and subsection 102.12, the decision of the Department or the Commission is final and binding on all Bidders.

102.07. Delivery of Bid. The Bidder must submit the bid using current Department software and before the deadline specified in the proposal.

Only an authorized representative of the Bidder, with a digital identification, may submit a bid to the Department. An authorized representative of the Bidder is an individual identified on the *MDOT Prequalification Application* form under "Person Authorized to Execute Contracts." Complete and submit this form in accordance with the Bureau of Finance and Administration's *Administrative Rules Governing the Prequalification of Construction Contractors*.

102.08. Withdrawal or Revision of Bid. The Bidder may withdraw or revise a bid before the deadline for submission of bids. The Department will consider only the last bid submitted by a Bidder, identified by date and time.

102.09. Downloading of Bids. The Department will download the bids and display the total bid amount of each bid on the Department's website as "As Submitted" bid results. If a Bidder has a system-generated receipt of submission and the Department did not receive the bid, the Department may accept a bid after the deadline in accordance with Department procedures and pending an investigation. The Department will handle these situations on a case-by-case basis.

102.10. Bid Review. The Department will review bids for mathematical accuracy to determine the apparent low Bidder. The Department will review the bid of the apparent low Bidder to verify compliance with the bidding requirements. If the Department determines the apparent low Bidder's bid is subject to rejection due to bidding irregularities, in accordance with subsection 102.06, the Department will repeat the verification process with the next apparent low Bidder until a bid meets the bidding requirements. The Department will refer bids of apparent low Bidders subject to rejection to the Bid Review Committee for review and decision. After the Department determines an acceptable low bid, it will publish the "As Checked" bids.

102.11. Bid Rejection. If the Bid Review Committee rejects a Bidder's bid, the Administrator of the Contract Services Division, or designee, will notify the Bidder of the following:

A. The rejection of its bid;
B. The reasons for the rejection;
C. The availability of an appeal to the Bid Appeal Committee; and
D. The appeal procedure.

If circumstances warrant and allow, the Administrator of the Contract Services Division, or designee, may discuss with the Bidder, the reasons for bid rejection and the Bidder's position. If the Bid Review Committee rejects an apparent low bid in accordance with subsection 102.06, the Bidder may file an appeal in accordance with subsection 102.12. If the Department makes successive rejections of low bids, each apparent low Bidder may file an appeal in accordance with subsection 102.12.

102.12. Bid Rejection Appeal. The Department will expedite the appeal process so as not to delay the award of a contract. The Department must receive a Bidder's written appeal of a bid rejection at the office of the Administrator of the Contract Services Division, within 5 calendar days after the Department notifies the Bidder of the decision to reject the bid.

The Administrator of the Contract Services Division, or designee, may designate a shorter time period for the submission of an appeal. If the Department deems circumstances warrant a time period of less than 5 calendar days for filing the appeal, the Administrator of the Contract Services Division, or designee, will notify the Bidder of the shortened period with the notice of rejection of the bid.

In the appeal, the Bidder must identify why it disputes the decision and supply pertinent information.

A. **Bid Appeal Committee.** The Administrator of the Contract Services Division, or designee, will assemble and submit all relevant information, including the decision of the Bid Review Committee, along with material and information submitted by the Bidder, to the Bid Appeal Committee.

The Bid Appeal Committee will review the information provided by the Administrator of the Contract Services Division, or designee, conduct any further inquiry, and make a decision. The Bid Appeal Committee usually makes a decision based on the written appeal, but the Bid Appeal Committee may request the Bidder meet with the Committee to review the issue.

The Deputy Director of the Bureau of Finance and Administration, or designee, will notify the Bidder, and other relevant personnel, in writing, of the Bid Appeal Committee's decision. If the Commission must approve the contract, the Department will also notify the Bidder of its right to file an appeal with the Commission. If the contract does not require the Commission's approval, the Bid Appeal Committee's decision is final and binding.

B. **Appeal to the Commission.** The Bidder must file a written appeal of the Bid Appeal Committee's decision on contracts that the Commission must approve no later than 5 calendar days after the Bid Appeal Committee renders its decision, or by 3:00 p.m. on the day immediately preceding the date the Commission is scheduled to consider approval of the contract, whichever is sooner. If the Bidder receives verbal or written notice of the Bid Appeal Committee's decision less than 24 hours before the appeal submission deadline, the Bidder may file the written appeal

no later than 9:00 a.m. on the day the Commission is scheduled to consider approval of the contract.

The Commission will review the information provided by the Department and the Bidder and make a decision. The Commission's decision is final and binding.

102.13. Consideration of Bids. To determine the low Bidder, the Department will compare the bids based on the total bid amounts (the sum of lump sum amounts and the products of the estimated quantities and unit prices). For a discrepancy between the calculated total and the total shown in the bid, the Department will use the unit prices entered in the bid and correct the errors found in the calculations.

The Department may consider a Bidder eligible for award, even though its total bid amount exceeds the Bidder's net prequalification, if the Bidder was properly granted eligibility to bid and the Department determines the Bidder to be the low Bidder on only one contract. If the Department determines a Bidder to be the low Bidder on more than one contract, and the total amount of the multiple low bid proposals exceeds the Bidder's net prequalification, the Department will award the contract(s) in the Department's best interest.

The Department may reject bids, waive irregularities advertise for new bids, or do the work in other ways in the Department's best interest. The decision by the Department to act in its best interest will not entitle Bidders to payment for preparing bids or anticipated profits.

102.14. Execution and Award of Contract. The Department will provide the contract and bond forms electronically to the determined low Bidder. The low Bidder will receive electronic notification of the documents availability at the e-mail address provided to the Department. The determined low Bidder will be responsible for printing the contract documents for return to the Department. Within 21 calendar days of transmittal, the Bidder must return, and the Department must receive the signed contract, bond forms, and other documents required by the Department. The Department may grant an extension of that deadline, if the extension would not impair the Department's interests. If the Department executes a contract received after the deadline, an extension will be deemed to have been granted.

If the determined low Bidder withdraws their bid submittal after opening and at any time prior to contract award they may forfeit their bid guaranty subject to the provisions of subsection 102.16.

The determined low Bidder's failure to submit their DBE documentation in the timeframes required by subsection 102.17 may result in the Department awarding the contract to the next low Bidder, or otherwise exercise its discretion in accordance with subsection 102.13.

If the Department does not receive the signed contract, bond forms, and other documents required within 21 calendar days of transmittal, or an extended deadline, the Department may award the contract to the next low Bidder, or otherwise exercise its discretion in accordance with subsection 102.13.

If the Department does not execute the contract within 35 calendar days after the transmittal of contract documents (including Department-approved extensions), the determined low Bidder may withdraw its bid without penalty. If the Department is responsible for the delay in award of the contract, the determined low Bidder may agree to extend the deadline for the execution of the contract for an agreed upon time period.

The Department considers the contract awarded and binding when signed by the determined low Bidder and executed by the Department.

102.15. Requirements of Contract Bonds. The determined low Bidder must furnish performance and lien bonds each for not less than 100 percent of the total contract price. The bonds must be on the forms provided by the Department. The bonds must meet the requirements of Michigan law and of the Department and include other items such as the powers of Attorney and Endorsement as specified by the Department. The same surety responsible for writing the performance bond must write the lien bond. It is the determined low Bidder's responsibility to ensure that the lien bond conforms with the terms of MCL 570.101 et seq., supra, except the lien bond must give the time within the notice of lien claim as follows, and secure the payment of claims:

A. Lienable under the terms of MCL 570.101 et seq;
B. Notice of which is not given by subcontractors within the statutory period, but
    1. Notice of which is given by subcontractors within 60 calendar days after notice of the payment of the final estimate or post final estimate having been made by the Department; or
    2. In the case of a supplier to the contractor or a subcontractor, within 120 calendar days after the materials are last furnished.

102.16. Bid Guaranty Payment. The determined low Bidder's failure to sign the contract and submit satisfactory bonds and other required documents for the award of the contract within the 21 calendar day period provided, or within a Department-approved extension to that period, will result in the payment of the bid guaranty to the awarding authority.

The determined low Bidder's failure to submit their DBE documentation in the timeframes required by subsection 102.17 may result in the payment of the bid guaranty to the awarding authority if the Bid Appeal Committee denies the appeal as outlined in subsections 102.11 and 102.12.

Each Bidder has a duty to carefully prepare and check the accuracy of its bid. The Department will return the bid guaranty only if the Bidder clearly demonstrates the following:

A. The Bidder made a substantial error and signing the contract would impose a substantial and unjustified hardship on the Bidder, given the size and nature of the project; or

B. Extraordinary circumstances beyond the control of the Bidder exist in which signing the contract would impose a substantial and unjustified hardship on the Bidder, given the size and nature of the project.

A Bidder's mistake in judgment in preparing the bid will not warrant non-payment of the bid guaranty absent a compelling reason that enforcing payment of the guaranty would be unconscionable under all circumstances. The Bidder is responsible for clearly and convincingly satisfying the criteria for non-payment of the bid guaranty.

The Bidder must make requests for the return of the bid guaranty in writing to the Administrator of the Contract Services Division, or designee. The Bid Appeal Committee will consider and render a decision on the request for non-payment. The Bidder must file the written request with the Department within 15 calendar days after the Department mails notice that the Bidder must forfeit the bid guaranty.

The Committee may require that the Bidder produce original bid documentation and submit other information to enable the Committee to decide if the Bidder is entitled to the return of the bid guaranty. The Committee may also request that Department staff review the documentation and other information and make a recommendation to the Committee. Where the Committee, in its sole determination, finds the documentation and other information provides a partial justification, the Committee may make a correspondingly partial reduction of the bid guaranty. The Committee's decision is final and binding.

If the Committee makes an adverse decision, or the Bidder fails to file a timely request for return, or cancellation, of the bid guaranty, the Bidder must make the bid guaranty payment within 20 calendar days after the Department mails a final demand for payment. If the Bidder does not make the payment within 20 calendar days, the Department will withhold the payment sum from money owed the Bidder, or may become due and owing to the Bidder.

Bidding practices, competitive considerations and last minute price changes commonly result in item prices that, in isolation, could be mischaracterized as bid errors. The Department intends payment of the bid guaranty to deter Bidders from manipulating the competitive process by mischaracterizing such item prices as bid errors to justify withdrawal of low bids, after the downloading of all bids. Payment of the bid guaranty also constitutes liquidated damages for failure to sign the contract, since it is difficult to determine the actual damages for the breach, as they are uncertain in nature and impossible to estimate with certainty. The damages include the various administrative costs as well as other losses, damages, and costs resulting from the failure of the Bidder to sign the contract. A determined low Bidder who withdraws their bid prior to contract award cannot participate as a subcontractor, supplier, or trucker on the project.

102.17. Subletting Contract Work to Disadvantaged Business Enterprises (DBEs). The DBE participation goal set as specified in the notice of advertisement must be made available to certified DBEs. Compliance with the designated DBE participation goal must be met by the utilization of DBEs to perform commercially useful functions as required by 49 CFR 26.55.

All Bidders must provide the overall DBE percentage they have attained at time of bid within the DBE goal folder of the bid file on all projects with a DBE goal designation.

All Bidders must submit MDOT Form 2653 *Contractor DBE Commitment* within 5 calendar days of the bid letting. This form must be submitted whether they have been able to meet DBE participation goal or not. Submit this information via e-mail to MDOT-DBESheets@michigan.gov.

A Bidder who fails to meet the submittal requirements for DBE participation will be deemed ineligible for award of the contract.

A Bidder who fails to meet the DBE participation goal will be deemed ineligible for award of the contract subject to the provisions of subsection 102.17.A.

A. **Pre-Award Waivers or Modifications.** If a low Bidder is unable to meet the DBE participation goal, additional information relating to MDOT Form 2653 *Contractor DBE Commitment*, will be required. Submit the additional information in accordance with the current Department DBE Program Procedures. The contract will not be awarded until the Department makes a determination.

B. **Post-Award Waivers or Modifications.** After award, the Contractor may request a waiver or modification of the DBE participation goal in accordance with current Department DBE Program Procedures. Prime Contractors may not terminate for convenience an approved DBE working on a federally-assisted contract, and then perform the work of the terminated DBE. The Contractor must notify the Department immediately of a DBE's inability to perform any or all of its work and the Contractor's intent to obtain a substitute DBE by filling out the DBE Removal/Substitution Form 0196

C. **Appeals.** A Contractor receiving an adverse determination, related to their request for waiver or modification of the DBE participation goal, may appeal the determination in accordance with current Department DBE Program Procedures.

The Department reserves the right to modify any requirement or shorten any time period where the need to place the project under contract is such that the public interest warrants such action and would be impaired by further delay. If the Department waives any of these requirements, except the length of a time period, it will assure that no Bidder is given a material competitive advantage by these actions.

D. **Reports.** The Contractor is required to submit a statement of DBE subcontractor payments to the Engineer in accordance with the contract.

E. **Penalties.** Failure to fulfill the DBE subcontracting requirement may be considered a breach of contract and may result in the Department exercising the rights and remedies available in accordance with the provisions of the contract. Remedies may also include suspension,

reduction, or removal of the Contractor's prequalification as stated in the *Administrative Rules Governing the Prequalification of Construction Contractors*.

102.18. OJT Program. Contractors assigned OJT Trainees based on the past contract volume of federal-aid work performed with MDOT, are required to fulfill all of the requirements of the OJT program at no additional cost to the Department in accordance with the current *On-the-Job Training Program Manual*.

102.19. Evaluation of Contractor Performance. The Engineer will evaluate the Contractor's, and all subcontractors, performance on the contract in accordance with the Department's written Contractor performance evaluation procedures. An evaluation may be used as a basis for modifying the prequalification ratings of the Contractor and any tier subcontractor. An evaluation may be issued at any time during the course of the contract (interim) and will be issued at completion of the contract (final). The criteria used for the evaluation of Contractor performance is posted on the Department's web site or may be requested from the Engineer. Any action to modify the Contractor's prequalification ratings will be taken in accordance with the duly promulgated administrative rules for prequalification.

If a Contractor and or any tier subcontractor fails to honor a request by the Engineer to submit a performance improvement plan or to meet to discuss the plan, or if a Contractor or subcontractor at any tier fails to carry out an approved performance improvement plan, that failure may be used as a basis for modifying the prequalification ratings of the Contractor or subcontractor at any tier as applicable. Any action to modify the Contractor's prequalification ratings will be taken in accordance with the duly promulgated administrative rules for prequalification.

102.20. Joint Two-Party Checks. Parties desiring a joint/two-party check arrangement, if one party is a DBE company, must submit an *Application to Use Joint Checks* as described on Department Form 0183.

An acceptable joint check arrangement must include the following:

1. Contractor/payor Contractor cannot require the subcontractor to use a specific supplier or the Contractor's negotiated price;
2. Subcontractor is more than an extra party in releasing the check to the material supplier;
3. Subcontractor negotiates the quantities, price and delivery of materials;
4. Contractor/payor Contractor issuing the check acts solely as guarantor;
5. Subcontractor releases the check to the supplier;
6. Only a short term arrangement (no more than two seasons) with the purpose being establishment of or increase of subcontractor's credit line with the material supplier; and
7. Subcontractor is responsible to both furnish and install the material/Work item.

Copies of cancelled joint checks issued from the payor/Contractor to a Disadvantaged Business Enterprise (DBE) and supplier must be submitted to the MDOT Office of Business Development upon request.

Additional costs for issuing and/or processing joint/two-party check arrangements will not be paid for separately, but will be included in costs for other pay items.

Section 103. SCOPE OF THE WORK

103.01. Intent of the Contract. The intent of the contract is to provide for the successful performance and completion of the work. The Contractor must perform the work as specified in the contract.

103.02. Revisions to the Contract.

A. **General.** The Department reserves the right to revise the contract at any time. Revisions to the contract neither invalidate the contract nor release the surety, and the Contractor agrees to perform the work as revised. The Contractor must not proceed with the revised work until directed to do so by the Engineer, but must continue with all work unaffected by the revision. The Engineer will provide a work order for the revised work when requested by the Contractor.

The Department will pay the Contractor for revisions to the contract in accordance with subsection 109.05, and grant extensions of time for revisions to the contract in accordance with section 108.

If the Contractor believes that one of the following subsections applies, the Contractor must notify the Engineer in accordance with subsection 103.03.B. If the Engineer and the Contractor do not agree as to whether one of the following subsections applies, the Contractor is directed to follow the provisions of subsection 104.10.

B. **Significant Changes in the Character of Work.** An adjustment, excluding anticipated profit, will be made to the contract if alterations or changes in quantities significantly change the character of the work. The basis for the adjustment must be agreed upon prior to the performance of the work in accordance with subsection 109.05.

Adjustments may apply whether such alterations or changes are in themselves significant changes to the character of the work, or by affecting other work, cause such other work to become significantly different in character.

A significant change applies only to the following circumstances:

1. When the character of the work, as altered, differs materially in kind or nature from that involved or included in the original proposed construction.

2. When a major pay item, as defined in subsection 101.03, is increased in excess of 125 percent or decreased below 75 percent of the original contract quantity. Any allowance for increase in quantity will apply only to that portion in excess of 125 percent of original pay item quantity, or in case of a decrease below 75 percent, to the actual amount of work performed. For decreases below 75 percent, the maximum allowable payment for work performed, including any adjustment, will not exceed an amount equal to 75 percent of the original contract quantity times the contract unit price.

3. When the Engineer increases the quantity of a minor pay item such that the revised quantity meets the criteria for a major pay item. The Department will make an adjustment in the contract unit price that applies only to the quantity of that pay item that exceeds the quantity meeting the criteria for a major pay item.

C. **Differing Site Condition.** During the progress of the work, if subsurface or latent physical conditions are encountered at the site differing materially from those indicated in the contract or if unknown physical conditions of an unusual nature, differing materially from those ordinarily encountered and generally recognized as inherent in the work provided for in the contract, are encountered at the site, the Contractor discovering such conditions must promptly notify the Engineer in writing of the specific differing conditions before the site is disturbed and before the affected work is performed.

Upon written notification from the Contractor, the Engineer will investigate the conditions, and if it is determined that the conditions materially differ and cause an increase or decrease in the cost or time required for the performance of any work under the contract, an adjustment, excluding anticipated profits, will be made and the contract modified in writing accordingly. The Engineer will notify the Contractor of the determination whether or not an adjustment of the contract is warranted in accordance with subsection 103.03.C.

No contract adjustment which results in a benefit to the Contractor will be allowed unless the Contractor has provided the required written notice.

No contract adjustment will be allowed under this clause for any effects caused on unchanged work.

D. **Suspension of Work Ordered by the Engineer.** If the performance of all or any portion of the work is suspended or delayed by the Engineer in writing for an unreasonable period of time (not originally anticipated, customary, or inherent to the construction industry) and the Contractor believes that additional compensation or contract time is due as a result of such suspension or delay, the Contractor must submit to the Engineer in writing a request for adjustment within 7 calendar days of receipt of the notice to resume work. The request must set forth the reasons and support for the adjustment in accordance with subsection 103.03.B.

Upon receipt, the Engineer will evaluate the Contractor's request. If the Engineer agrees that the cost or time required for the performance of the contract has increased as a result of the suspension and the suspension was caused by conditions beyond the control of and not the fault of the Contractor, its suppliers, or subcontractors at any tier, and the suspension was not caused by weather, the Engineer will make an adjustment (excluding profit) and modify the contract in writing. The Contractor will be notified of the Engineer's determination whether or not an adjustment of the contract is warranted in accordance with subsection 103.03.C.

No contract adjustment will be allowed unless the contractor has submitted a request for adjustment within the time prescribed.

No contract adjustment will be allowed under this clause to the extent that performance would have been suspended or delayed by any other cause, or for which an adjustment is provided for or excluded under any other term or condition of this contract.

E. **Extra Work.** The Engineer may, at any time during the progress of the contract, order extra work. The Engineer will provide the Contractor with a work order stating the location, kind, and estimated quantity of the extra work the Contractor is to perform. Costs for the extra work will be negotiated based on subsection 109.05.

F. **Eliminated Work.** The Engineer may eliminate all or a portion of any pay item.

The Department will compensate the Contractor a fair and equitable amount for all direct costs incurred on the portion of pay item work not yet completed prior to the elimination of the pay item.

103.03. Contractor-Engineer Communication.

A. **General.** The specified time limits may only be extended through a written, jointly signed agreement between the Contractor and the Engineer.

B. **Written Notice, by Contractor.** The written notice required by subsection 103.02 should include the following:

1. A description of the situation;
2. The time and date the situation was first identified by the Contractor;
3. The location of the situation, if appropriate;
4. A clear explanation of why the situation requires a revision to the contract, including appropriate references to the pertinent portions of the contract;
5. A statement of the revisions deemed necessary in the contract price(s), delivery schedule(s), phasing, time, etc. Because of its preliminary nature, the Department recognizes that this information may rely on estimates;
6. An estimate of the time by which the Engineer must respond to minimize cost or delay, and, if applicable; and
7. Anything else that will help achieve timely resolution.

C. **Written Response, by Engineer.** Within 7 calendar days of receiving the Contractor's written notice, or sooner if possible, the Engineer will provide a written response that includes one of the following:

1. Confirmation of the need for a revision to the contract and a statement of the applicable subsections of section 108 and subsection 109.05 under which the revision is determined. If the work covered by the revision is complete at the time of the response, the Engineer will include the applicable contract modification in the response. An extension of time, if one is necessary, will be determined in accordance with section 108 and the result included.

Compensation for the revision, if any is necessary, will be determined in accordance with subsection 109.05 and the result included.

2. Denial of the request for a revision to the contract, in which case the Engineer will make clear, through reference to the contract, why the issue does not require a revision to the contract.

3. A request for additional information, in which case the Engineer will state clearly what is needed and by when; the Engineer will issue a final response within 7 calendar days of receiving the additional requested information, or sooner if possible.

D. **Contractor's Recourse.** If the Contractor disagrees with the Engineer's final written response or the Engineer's response is untimely, the Contractor may pursue a claim in accordance with subsection 104.10.

Section 104. CONTROL OF THE WORK

104.01. Authority of Department. The Contractor must not construe approvals, reviews, or inspections by the Department or its officers, agents, and employees as a warranty or assumption of liability on the part of the Department. The Contractor understands and agrees that approvals, reviews, and inspections are for the sole and exclusive purposes of the Department, which is acting in a governmental capacity under the contract. Department approvals, reviews, and inspections do not relieve the Contractor of its contractual obligations. The Contractor understands that approvals, reviews, and inspections are undertaken for the sole use and information of the Department and will not act as a warranty as to the propriety of the Contractor's performance.

A. **General Authority of the Engineer.** The Engineer will decide questions that arise concerning the interpretation of the contract, and its acceptable fulfillment. The Engineer will also decide questions regarding the quality and acceptability of materials provided, work performed, manner of performance, and rate of progress of the work.

If either party discovers any errors, uncertainties, inconsistencies, omissions, or conflicts in the contract, the Engineer will clarify and determine the true intent of the contract.

B. **Authority of the Engineer to Suspend Work.** The Engineer may suspend the work, or a portion of the work, for the following:

1. Failure by the Contractor to correct conditions that are unsafe for the workers or the general public;
2. Unsuitable weather;
3. Conditions considered unfavorable for the prosecution of the work; or
4. Any other condition or reason deemed to be in the interest of the public.

Upon written notice of a suspension, the Contractor must put the work in a satisfactory condition and protect the work, as directed by the Engineer. The suspended work must not adversely affect the safety or mobility of the public. The Contractor must not resume the suspended work until directed, in writing, by the Engineer.

C. **Authority of the Engineer to Direct the Acceleration of the Work.** The Engineer may order the Contractor to accelerate the work or portions of the work to avoid user delay costs or to complete the project early.

D. **Authority and Duties of Inspectors.** The Department may appoint Inspectors to inspect the work and test materials. These duties may extend to all parts of the work and preparation or manufacture of materials for use in the work. The Department does not authorize an Inspector to revoke or change the contract. If a dispute arises between the Contractor and the Inspector regarding the materials provided or performance of the work, the Inspector may, by submitting written notice to the Contractor, reject materials or suspend the work until the Engineer makes a

determination regarding the dispute. The Department considers work performed contrary to the Inspector's directions or work performed while suspended by the Inspector as unauthorized work. The Engineer may direct the Contractor to remove and replace unauthorized work at no additional cost to the Department in accordance with subsection 104.05. Actions or omissions of the Inspector will not relieve the Contractor of the responsibility of completing the work as required by the contract.

E. **Authority to Inspect.** The Contractor must provide the Department and its authorized representatives safe access to the work at all times. The Contractor must provide the Department and its authorized representatives with the information and assistance necessary for them to make complete and detailed inspections. The Department may also perform inspections at mills, plants, laboratories, shops, or other locations outside of the project limits. The Contractor is not entitled to a time extension or compensation for reasonable delays, inconvenience, or any other cause attributed to the Department's reasonable inspection of the work.

F. **Authority to Inspect Scales.** The Contractor must enlist the services of a Michigan Registered Service Agency to certify the calibration and working order of the weighing system. The Department may inspect or verify scale systems, private scale inspectors, and inspection agencies. The Contractor must immediately correct any failure to meet the requirements of this subsection.

The Contractor must ensure at all times that scales are installed, maintained, and used in accordance with the Weights and Measures Act, MCL 290.601 et seq., and the requirements of the NIST Handbook 44, *Specifications, Tolerances and Other Technical Requirements for Weighing and Measuring Devices*.

The Contractor is responsible for all costs incurred for the inspection of scale systems and no additional compensation will be allowed. The Contractor is not entitled to an extension of time or compensation for reasonable delays, inconvenience, or any other cause attributed to the Department's inspection of scale systems.

104.02. Plans and Working Drawings. The Department will provide plans showing details of the work required by the contract. If the plans omit dimensions necessary to complete the work, the Engineer will provide the Contractor with the omitted dimensions upon request. The Contractor is responsible for all dimensions he or she scales from the plans.

The Contractor must submit, for review, all working drawings not furnished by the Department for all parts of the work as required by the contract. The working drawings must call attention to deviations from the plans, specifications, and contract. If deviations have not been clearly identified, they will not be considered as part of the working drawing approval.

If the contract requires working drawings and design calculations that are not part of the finished structure, the Contractor must submit these working drawings and design calculations to the Engineer for Department review. If the contract does not require these working drawings and

design calculations, but the Engineer directs the Contractor to submit them, the Department will pay for these working drawings and design calculations as extra work. The Contractor must ensure that a professional engineer, licensed in the State of Michigan, seals all working drawings and design calculations submitted. The Contractor is responsible for the correctness of the working drawings and design calculations, and ensuring the design complies with any permit requirements.

The Contractor will submit a complete set of working drawings, and design calculations and the Department will have up to 14 calendar days to review for approval, or provide comments for revisions required to obtain approval unless noted otherwise in the contract documents. Should approval not be granted per the first review, the Contractor is required to submit revised working drawings and design calculations, of which the Department may require up to 7 calendar days for each additional review cycle. To ensure timely response and review timeframes, the Contractor, and Department will communicate directly to address and resolve all outstanding comments on all subsequent submittals. If, for reasons not attributed to the Contractor, additional time is required beyond 28 calendar days of Department review time to obtain approval for the working drawings, this additional time will be considered for an extension of time in accordance with subsections 108.07 or 108.08. The Contractor is responsible for costs associated with obtaining approval of working drawings and design calculations.

The Department's review and approval does not relieve the Contractor of full responsibility for all negligence in the construction of the project resulting from the working drawings. The Department's review and approval of the working drawings and design calculations is not a warranty of the adequacy and correctness of the design.

The Contractor may arrange for the Department to communicate directly with the fabricator or supplier to review the working drawings for the following or similar items:

A. Fabricated structural elements;
B. Mechanical equipment;
C. Electrical equipment and circuitry; and
D. Water mains.

Prior to development of working drawings, the Contractor must check the dimensions and locations of the exposed features on existing structures to verify that its relationship to the proposed work is as shown on the plans. The Contractor must notify the Engineer of differences between the actual dimensions and locations of exposed existing features and those shown on the plans. The cost of verifying the dimensions and locations of exposed existing features is included in the contract unit price for **Mobilization** in accordance with section 110.

After completing the work, the Contractor must provide the Department with one complete set of working drawings on a medium approved by the Department. The Contractor must provide copies of catalogue cuts, parts lists, operating procedures, and instructions as deemed necessary for the project by the Engineer.

104.03. Deviations from the Plans. The Contractor must not deviate from the plans or from Department-approved working drawings and design calculations, unless the deviation is approved by the Engineer in writing.

If the Engineer approves deviations from the plans or Department-approved working drawings, the Contractor must submit to the Engineer revised plans, working drawings, and design calculations, sealed by a professional engineer, licensed in the State of Michigan, for review by the Department. The Contractor is responsible for the correctness of these revised plans, working drawings, and design calculations, and ensuring that the revised design complies with any permit requirements.

104.04. Conformity with the Contract. The Contractor must perform the work as required by the contract. The Engineer may reject work that does not meet the contract requirements. If the Engineer accepts work that does not meet the contract requirements, the Engineer will document the basis of acceptance by contract modification. The Engineer will determine whether a reduction in the contract unit price or a guaranty bond is appropriate, and will properly document its determination.

The Contractor must remove and replace or correct rejected work as directed by the Engineer, at no additional cost to the Department.

104.05. Removal of Unauthorized Work. If the Contractor performs unauthorized work (work performed without the inspections required by the contract, extra work performed without Department approval, work performed contrary to the Inspectors' direction, or work performed while under suspension by the Inspector), the Engineer may direct the Contractor to remove and replace the unauthorized work at no additional cost to the Department.

104.06. Coordination of Drawing Dimensions and Contract Document. In case of a conflict in the contract documents, the following establishes the order of precedence:

A. All proposal material except those listed in subsections 104.06.B through 104.06.F;
B. Special provisions;
C. Supplemental specifications;
D. Project plans and approved working drawings;
E. Standard plans; and
F. Standard specifications.

Plan dimensions take precedence over calculated dimensions; calculated dimensions take precedence over scaled dimensions.

The Contractor must not take advantage of errors or omissions in the contract and must immediately notify the Engineer when errors or omissions are discovered. If any errors,

uncertainties, inconsistencies, omissions, or conflicts are discovered in the contract documents, the Engineer will determine the true intent of the contract.

104.07. Contractor Obligations. The Contractor must obtain and provide sufficient materials, equipment, tools, labor, and incidentals to complete the project as required by the contract. The Contractor, its suppliers, and its subcontractors must allow the Department access to, relevant records, accounts, other project-related documentation, and to their facilities as necessary for the Department to determine compliance with the contract requirements.

Except for safety issues or as required by the contract, the Contractor must not suspend work unless approved by the Engineer in writing. The Contractor must notify the Engineer within 24 hours of suspending the work.

A. **Project Supervisor.** The Contractor must provide a Project Supervisor to manage the work. Before beginning the work, the Contractor must submit to the Engineer the name of the Project Supervisor in writing. As the primary representative of the Contractor on the project, the Project Supervisor must be available at all times and must:

1. Have access to the relevant contract documents at all times;
2. Ensure each subcontractor has access to the relevant contract documents covering their work at the project at all times;
3. Communicate in English;
4. Be capable of reading, interpreting, and implementing the relevant contract documents;
5. Communicate with subcontractors in a manner that ensures the Department's directions are carried out;
6. Be familiar with, and competent in, the management of projects involving the type of work being performed;
7. Act as agent for the Contractor and be responsible for subcontractors;
8. Anticipate construction impacts to property owners and businesses, and work with these parties before the impacts occur to minimize conflict;
9. Handle delays or quality issues for the Contractor; and
10. Receive and implement the direction of the Engineer.

When the Contractor or its subcontractors are performing work, the Project Supervisor must be present at the project, unless otherwise approved by the Engineer. When the Contractor and subcontractors are not performing work at the project, the Contractor must designate a Contractor representative to receive and execute directions from the Engineer at all times. The representative must be available at all times to receive and sign work orders.

B. **Safety and Health Requirements.** The Contractor is responsible for protecting the life and health of all personnel on the project; the safety and health of the public; and property during the construction of the project.

The Contractor must comply with all local, state, and federal laws and regulations governing construction methods and the furnishing and use of safeguards, safety devices, protective equipment, and environmental and hazardous materials controls.

The Contractor must provide the following prior to the commencement of construction:

1. **Safety Supervisor.** The Contractor must appoint a Safety Supervisor, and an alternate, with the authority and responsibility to administer the Construction Safety Program on the project. The Contractor must provide written notification to the Engineer of the names, addresses, and telephone numbers of the Safety Supervisor and the alternate.

2. **Construction Safety Program.** Before beginning work on the project, the Contractor must submit a written "Construction Safety Program" that outlines the plan and procedures for preventing and mitigating accidents and fires on the project and meeting all health and safety requirements of the contract, including provisions for meeting the requirements of subsection 812.03 and details for the materials and equipment that will be used to prevent construction related debris or materials from entering the open lanes of traffic and what actions, including traffic control measures, will be taken to immediately and safely remove the debris or material from the roadway. The Engineer may request a meeting with the Contractor to discuss the "Construction Safety Program" and to develop mutual understandings to govern the administration and enforcement of the program.

3. **Emergency Control.** The Contractor or alternate must remain on call for notification of emergencies that may arise during periods when construction operations are not in progress. The Contractor must be available to assist local emergency response efforts by addressing any contract work involved in, or affected by the emergency as directed by the Engineer.

   The Contractor must periodically meet with the Engineer as the work progresses to review the contract and the "Construction Safety Program," and to consider necessary changes to the program for traffic protection and accident prevention.

   If the Contractor is not reasonably available to take protective or corrective action, the Department will authorize others to do the protective or corrective action. The Contractor will be responsible for the itemized cost associated with protective or corrective action required for traffic protection and accident prevention, and completed by others at the Department's direction.

4. **High-Visibility Safety Apparel.** All workers must wear high visibility safety apparel as specified in the MMUTCD.

C. **Maintenance During Construction.**

1. **Routine Maintenance by the Department.** Except as specified in subsection 104.07.C.2, the Department will assume routine maintenance of roads bridges or other facilities open to

traffic or in use by the public during periods of approved seasonal suspensions. The Department defines routine maintenance as the repair of damage to roads, bridges or other facilities from normal wear and tear due to traffic and weather. Routine maintenance does not include damage resulting from the Contractor's vehicles or equipment. The Department will perform snow plowing and ice control work on roads and facilities open to traffic.

The Contractor is not entitled to compensation for delays, inconvenience, or any other cause attributed to the Department's performance of routine maintenance.

2. **Routine Maintenance by the Contractor.** If the Contractor maintains through traffic on the project, the Contractor must perform necessary routine maintenance, as directed by the Engineer, on that portion of the roadbed surface on which construction operations have begun. The Contractor must perform routine maintenance outside the area of construction operations, but within project limits only if directed to do so by the Engineer in writing. The Department will pay the Contractor for all routine maintenance directed by the Engineer as extra work.

   The Contractor must perform routine maintenance on Contractor constructed temporary facilities not open to traffic or in use by the public (including during periods of approved seasonal suspensions) at no additional cost to the Department, unless otherwise required by the contract. The Contractor must provide access for local traffic to property along the project even during seasonal suspension at no additional cost to the Department unless otherwise provided for in the contract.

   Sweep pavements in the construction area, including service roads and cross streets, as directed by the Engineer. Paved surfaces must be swept as often as necessary and as directed by the Engineer. Paved roadbeds must be given a final cleaning within 7 days prior to opening the pavement surface to traffic or notification by the Contractor that the work is completed, whichever occurs first. The work of sweeping will not be paid for separately, but payment will be considered as having been included in other contract items.

3. **Damage Repair by the Contractor.** Except as specified in subsection 107.11, the Contractor must repair damage to highway facilities caused by defective materials, faulty workmanship, Contractor operations, and work not protected properly from naturally occurring events at no additional cost to the Department. The Contractor is responsible, at no additional cost to the Department, to provide the necessary materials and equipment to prevent construction related debris or materials from entering the open lanes of traffic. This includes protection of traffic controls, removal of spilled materials or debris from the roadbed or drainage courses, and repair of damaged facilities necessary for public travel and safety.

   The Contractor must provide, install, and operate traffic control devices required to warn traffic of and protect traffic from Contractor-damaged facilities and repair operations at no additional cost to the Department. If the Department determines that the Contractor is not reasonably available to take protective or corrective actions, the Department will authorize others to complete the protective or corrective actions. The itemized cost associated with protective or

corrective action, required due to Contractor-damaged facilities and repair operations, and completed by others at the Department's direction will be the responsibility of the Contractor.

D. **Final Clean Up.** Unless otherwise required by the contract, the cost of final clean up is included in the contract unit price for other pay items.

Before final acceptance by the Engineer, the Contractor must complete all of the following:

1. Remove the following from the project limits, unless otherwise required by the contract or directed by the Engineer:
   a. Falsework;
   b. Unused materials;
   c. Temporary erosion control devices;
   d. Rubbish;
   e. Temporary bridges, approaches, and buildings;
   f. Equipment; and
   g. Temporary traffic control devices.
2. Restore areas occupied during the project to a condition at least equal to the condition existing before the Contractor began performing work, as determined by the Engineer.
3. Restore property that was used or damaged during the performance of the work, including property outside of the project limits.
4. Provide the Department with written notification that all property that was used or damaged during performance of the work, including property outside of the project limits, has been restored in accordance with applicable local, state and federal requirements.
5. Clean paved roadbeds and sidewalks within 7 days before opening the pavement surface to traffic. Take precautions so as not to produce airborne dust when cleaning roadbeds in residential and urban areas.

104.08. Cooperation by the Contractor. The Contractor must conduct operations to cooperate with and interfere as little as possible with activities of other contractors, the Department, utilities, or public authorities on or near the project, or as directed by the Engineer. The Department may perform other work and allow public utility companies and others to do work on or near the project. The Contractor is not entitled to compensation or extension of time for delays or costs incurred as a result of complying with this requirement, except as allowed in either subsection 108.08 or subsection 108.09.B.

If a dispute arises between two or more Contractors or others as to the respective rights of each under these specifications, the Engineer will determine the matters at issue and will define the respective rights of the various interests involved, in order to secure the completion of all parts of the work in general harmony and with satisfactory results. The Engineer's decision will be final and binding on all parties concerned. The Contractor, or any other party, is not entitled to an extension of time or compensation for delays, inconvenience, or any other cause attributed to the Engineer's decision, except as allowed in either subsection 108.08 or subsection 109.05.

104.09. Lines, Grades, and Elevations. The Contractor must provide, place, protect, and maintain staking necessary for proper prosecution, inspection, and final measurements of the work in accordance with Section 824 and the contract. The Contractor must determine and lay out detail dimensions and elevations. The Engineer may check to determine if the Contractor's work meets the contract requirements in accordance with subsection 104.01.

104.10. Claim for Extra Compensation or Extension of Time. The Contractor must sign and submit a claim for extra compensation or time extension to the Department, whether on behalf of the contractor or any tier subcontractor. If the Contractor fails to submit a claim in accordance with the Department's written claim procedure in effect at the time the Contractor files the claim and this subsection, the Contractor waives its rights to compensation or an extension of time for the claim. This waiver applies whether or not, as a result of the Contractor's failure to comply with these requirements, the Department's rights were prejudiced. The Contractor and Department will use the following procedure for claims:

A. **Notice of Claim.** The Contractor must sign all notices of intent to file a claim and ensure the written notice includes a concise description of the claim and identifies the contract requirement in dispute. If seeking extra compensation for any reason not specifically covered elsewhere in the contract, the Contractor must notify the Engineer in writing in accordance with following time requirements:

1. Before beginning the work or upon encountering the circumstance that is the basis of the claim.
2. Within 3 calendar days after the beginning of a delay, for which the Contractor intends to seek compensation.

If the Contractor fails to provide written notice, the Contractor waives all rights to a claim for compensation or an extension of time except if the Department prepared records that substantiate the claims with regard to liability and amount, and claims are for extra costs that were unforeseeable. If the Contractor fails to provide proper written notice for extra compensation or if the Contractor fails to allow the Engineer to record accounts of actual costs, the Department's claims process decision regarding extra compensation will be considered final and binding.

The Department will not consider the Contractor's refusal to sign a written contract modification or work order, or the Contractor's signing of a contract modification or work order under protest, as the required written notice.

B. **Keeping Records.** If submitting a written notice of intent to file a claim, the Contractor must:

1. Keep accurate records of the costs of the work or delay;
2. Allow the Engineer every facility for keeping records regarding the costs of the work or delay related to the claim; and
3. Compare records with the Engineer and bring them into agreement at the end of each day.

C. **Validity of Claim.** The notice of intent to file a claim or the Engineer's cost record keeping does not establish the validity of a claim.

D. **Timing for Filing of Claim.** The Contractor must file a claim with the Engineer within the following timeframes, whichever occurs first:

1. No later than 60 calendar days after the work involved in the claim is completed, or the delay, loss of efficiency, loss of productivity, or similar event is terminated; or
2. No later than 60 calendar days after the final acceptance of all contract work.

The Department may grant extensions of the above time requirements in accordance with the Department's current claim procedure.

E. **Claim Content and Certification.** The Contractor's claim must include a completed Form 1953 *Claim Content and Certification* that contains the following information, as applicable:

1. A detailed factual statement of the claim providing necessary dates, locations, and items of work related to and included in the claim.
2. The date or dates on which actions resulting in the claim occurred or conditions resulting in the claim became evident.
3. Identification of documents substantiating the Contractor's claim.
4. Identification of the provisions of the contract that support the claim and a statement of the reasons these provisions support the claim.
5. A detailed compilation and a breakdown of the amount of additional compensation sought as follows:
   a. Documented additional labor costs;
   b. Documented additional material costs;
   c. List of additional equipment costs, including each piece of equipment and the rental rate claimed for each;
   d. Markups for items a. through c. per subsection 109.05.D; and
   e. Other additional direct costs or damages, and associated supporting documentation.
6. For a claim related to an extension of time, a detailed compilation of the specific dates and the exact number of calendar days sought for the extension of time, the basis for entitlement to time for each day, all documentation of the delay, and all impacts of the delay to the progress schedule and critical path.

Subcontractors must document and certify their claim(s) as described in subsection 104.10.E. If the Contractor has a claim item related to a subcontractor's claim, the Contractor must document and certify their claim as described in subsection 104.10.E.

F. **Consistency of Claim and Exhaustion of Administrative Remedies.** If the Contractor's claim in any administrative proceeding or in the Court of Claims seeks relief greater than the amount sought at a prior level, or if the claim is based on facts or issues that differ from those presented at a prior level, the Contractor has failed to exhaust its administrative remedies. If the

Contractor fails to exhaust its administrative remedies, the claim must be returned by the Department to the preceding level for a new review and decision. The Department in its sole discretion will determine whether the Contractor has exhausted its administrative remedy at any level. The Department's decision is final and binding, and not subject to further review or consideration. Nothing in this paragraph precludes the Contractor from withdrawing any portion of its claim or reducing the amount sought at any time.

The Contractor's written acceptance of an administrative proceeding panel's decision on claim item(s) constitutes a settlement of the claim item(s) and bars the Contractor from pursuing further legal remedies against the Department on the settled claim item(s).

104.11. Work Zone Safety and Mobility.

A. **General Traffic Control.** The Contractor must not close roads, bridges, or sections of roads and bridges to traffic unless required by the contract or directed by the Engineer.

B. **Contractor Operations.** The Contractor must develop and provide an "Internal Traffic Control Plan (ITCP) for the project in accordance with the *Work Zone Safety and Mobility Manual* unless otherwise directed by the Engineer. The ITCP must outline the Contractor's haul routes, work area access points, and the maintenance of the temporary traffic control devices. The Contractor must ensure the ITCP minimizes conflicts between construction vehicles and motorists, and maintains overall safety and mobility within the work zone.

1. **Limitations for Construction Equipment On or Crossing Pavements and Structures.** The Engineer will consider allowing the Contractor to use construction equipment on pavements and structures within project limits after the Contractor performs the following:

   a. Saws transverse expansion joints and places temporary or permanent seals;
   b. Makes relief cuts for transverse contraction and longitudinal joints;
   c. Places applicable temporary or permanent seals in transverse contraction joints that have been sawed full width;
   d. Completes the transverse post tensioning of a bridge span; and
   e. Ensures the concrete has gained sufficient strength for the placement of the intended load.

   Construction equipment traveling on pavements must not have tire loads greater than 850 pounds per inch of nominal tire width.

   The Contractor must not use equipment that will damage the surface without protective devices, such as planks or timbers. The Contractor cannot use an earth cushion on a bridge structure.

   Permission to use construction equipment on pavements and structures will neither constitute a waiver of applicable provisions of subsection 107.11 nor waive the Contractor's legal

responsibility to observe weight restrictions on highway sections that the Department has approved for traffic in accordance with subsection 107.21.

The Department defines overweight vehicles as having maximum gross axle loadings greater than the limits specified in accordance with Michigan Law. The Department defines legal load limits, as the term is used in this section, as loads carried by vehicles with axle loading in accordance with Michigan Law.

The Contractor must determine concrete strength as specified for applicable work progress specimens in Division 10.

2. **Construction Equipment Crossing Structures Which Have Not Attained 100 Percent of Design Strength.** The Engineer will consider requests to cross concrete bridges, grade separations, and box and slab culverts based on the gross vehicle load and the concrete strength as specified in Table 104-1. The Contractor must ensure the maximum axle loading is no greater than the loadings permitted under the Michigan Vehicle Code, MCL 257.1, et seq., for the axle spacing indicated therein.

Table 104-1
Loads Permitted to Cross Structures as Concrete Gains Strength

Minimum Design Compressive Strength, %	**Maximum Total Gross Vehicle Weight or Maximum Allowable Number of Axles** (a)
60	30,000 lbs
67	37,500 lbs
75	5 axles
80	No limit on axle number

a. The Department will evaluate crawler-mounted equipment on an individual basis.

3. **Construction Equipment Crossing Structures Which Have Attained 100 Percent of Design Strength.** If the Contractor requests permission to cross structures within the project limits with vehicles that weigh more than the legal load limit, the Engineer will make a design analysis of the structure and the proposed loading based on established criteria. If the Engineer approves, the Contractor may cross structures with vehicles that weigh more than the legal load limit subject to the following:

   a. **General Requirements.** The Contractor must grade and maintain structure approaches flush with the bridge deck at least 50 feet from each end of the structure.

      The Contractor must place a temporary concrete or structural timber header on the pavement seat at each end of the structure. The Contractor must use a ¼-inch wood divider, two thicknesses of heavy building paper, or 6 mil polyethylene to separate a temporary concrete header from the pavement seat. The Contractor must remove and dispose of the temporary header and divider board at the time of paving.

      The Contractor must ensure equipment comes to a complete stop before crossing a structure. The Contractor must only allow one loaded vehicle on the structure at one time.

The Contractor must ensure equipment does not travel on the structure at speeds greater than 5 miles per hour, unless otherwise required by the contract.

b. **Specific Requirements.** The Department will state the following specific conditions in the authorization:

   i. Material to be used to cover and protect joints from infiltration and damage;
   ii. Axle weights loaded and unloaded;
   iii. Spacing of axles;
   iv. Spacing of wheels on each axle;
   v. Tire size; and
   vi. Estimated number of vehicle crossings to be made.

c. **Damage to the Structure.** The Contractor must inspect the structure with the Engineer before and after hauling to identify if damage occurred. The Engineer will determine what constitutes damage and the repairs to be made. The Contractor must repair damage to the structure, including joints, resulting from hauling operations at no additional cost to the Department.

d. **Violation of Requirements.** If the Contractor violates any of these requirements or any conditions specified by the Department, the Engineer will immediately revoke the authorized permission. The Contractor must not consider the authorization to haul across a structure or the withdrawal of authorization to haul across a structure as the basis for compensation, a revision to the contract unit price for any item or entitlement to an extension of time.

4. **Overloads Not Exceeding Legal Limits by 50 Percent on or Crossing Pavements.** The Department will consider loads on concrete pavements, other than temporary concrete pavements, that do not exceed legal limits by 50 percent in accordance with Table 104-2.

Table 104-2
Required Concrete Pavement Strength Before Crossing
New and Existing Pavements within Project Limits

Flexural Strength all Concrete Grades, psi	Maximum Load Type Allowed
450	Slip-form pavers and finishing equipment
550	Load within legal limits
600	Loads up to 25 percent over legal limits (for batch-hauling and shoulder operations only)
650	Occasional loads up to 50 percent over legal limits (to complete construction activities)

The Engineer may allow occasional loads that exceed the legal limit by not more than 50 percent on hot mix asphalt pavements after rolling is complete and the mat has cooled to ambient temperatures. The Contractor must protect pavement, including edges, to prevent damage to the pavement. If the Contractor's hauling operations cause damage, the Contractor must repair the damage at no additional cost to the Department.

5. **Overloads Exceeding Legal Limits by 50 Percent On or Crossing Pavements.** The Engineer may allow loads that exceed the legal load limit by 50 percent or more to cross existing concrete pavements at designated locations under the following conditions:

   a. The Contractor places transverse joint saw cuts in the pavement and uses painted lines to define the crossing area (approximately 50 feet wide);
   b. The Contractor maintains traffic on the pavement during hauling and reconstruction, as approved by the Engineer; and
   c. After completing hauling with overloads, the Contractor must remove the pavement between the two saw cuts and replace the pavement with new pavement of the same type and design as the original pavement.

   If traveling across existing or new hot mix asphalt pavements with loads that exceed the legal load limit by 50 percent or more, the Contractor must remove and replace the crossing area to the required surface tolerances, as directed by the Engineer.

   If the Contractor crosses existing pavements while hauling material from sources other than Department-designated sources, the Contractor must perform repair and restoration work as consideration for permission to haul with overloaded wheels or axles at no additional cost to the Department.

   If the Contractor crosses existing pavements while hauling material from a Department designated borrow area, the Department will pay for the removal and replacement of pavement, if directed by the Engineer, at the contract unit price for required items of work.

104.12. Approval for the Use of the Right-of-Way. The proposed right-of-way use must be directly related to the operations of the project under contract. The Contractor may use Department-owned right-of-way to perform the work if prior written approval is given by the Engineer. Additional restrictions regarding the use of right-of-way may exist in the contract. The use of right-of-way in wetlands and floodplains, or the crossing of water courses by construction equipment is prohibited.

To use Department right-of-way, the Contractor must submit to the Engineer a written request including a “Right-of-Way Use Plan.” The Contractor must include the following in the plan:

A. Site location and layout;
B. General intended use;
C. Site access plan;
D. Any access through right-of-way fencing or boundaries;
E. Identification of materials and method of storage as applicable;
F. Soil erosion and sedimentation control plan;
G. Site restoration requirements;
H. Drainage and environmental protection plan;

I. Acquisition of necessary permits; and
J. Commitment to follow all local laws and ordinances.

The Engineer may direct the Contractor to include additional information in the plan.

The Department will review the written request and provide a written response to the request indicating approval, approval with conditions or modifications, or denial with reason.

Section 105. CONTROL OF MATERIALS

105.01. Quality and Source of Supply. Unless otherwise required by the contract, the Contractor must:

A. Provide new materials and fabricated items that meet the requirements of the specifications or approved by the Engineer in writing before use in the work.
B. At the preconstruction meeting, provide the information requested on the Department's Form 0501 *Materials Source List* for the materials to be used in the work. Temporary traffic control materials that are covered in the MQAP Manual are not required to be listed on Materials Source List form.
C. Notify the Engineer in writing, at least 7 days prior to: materials being delivered to the site and materials being ready for sampling, testing or inspection by the Department.
D. Provide the Department with a reasonable time to perform the required sampling, testing or inspection if the source of supply is changed.
E. Provide the required documentation and obtain written approval from the Engineer before transferring materials that the Department has accepted for use on another Department contract.
F. Regardless of the application, prohibit the use of industrial byproducts, covered in Part 115, Solid Waste Management, MCL 324.11501, et seq.

If the Department determines that a source of supply does not provide an acceptable product as required by the contract, the Engineer may require the Contractor to provide acceptable material from other sources. The Contractor is not entitled to an extension of time or compensation for delays, inconvenience, or any other cause attributed to the Contractor providing acceptable material from other sources.

105.02. Natural Material Sources Found within the Excavation Limits. The Contractor may use natural material found within the excavation limits if the material meets the contract requirements of the work for which it is used, as determined by the Engineer. The Department will pay the Contractor for excavating this material at the corresponding contract unit price and for the pay item for which the excavated material is used.

105.03. Borrow Material. The Department defines borrow material as material found outside the excavation limits. The Contractor must provide borrow material and the cost is included in the contract unit price of the pay items for which the borrow material is used.

The Contractor may not remove borrow material from within the project limits for use on this or other projects unless prior written approval is obtained by the Engineer in writing. The Contractor must reimburse the Department for the borrow material removed from the project limits for use on other projects at a rate of $2.00 per cubic yard, in-place volume.

The contract may identify a source of Department-provided borrow material for the Contractor's use on the project. After removing the borrow material, the Contractor must not waste other material in the borrow area until approved by the Engineer in writing.

If the contract identifies a source of borrow materials, it is the Contractor's responsibility to determine the equipment and work required to produce acceptable material from that source. Based on material test results, the Engineer may limit removal of material from a source and may reject portions of the material from the source in accordance with subsection 105.08.

Before using material from sources other than those identified in the contract, the Contractor must provide written certification to the Engineer that the material is environmentally acceptable, acquire required rights and permits, and submit a copy of any permits to the Engineer. The cost of acquiring these sources, obtaining necessary permits, and using the material from these sources is included in the contract unit price of the pay item for which the material is used.

Granular material excavated from underwater must be stockpiled and drained, so it is free of water before placement on a prepared subgrade. If the Contractor chooses to dewater borrow material by temporarily lowering the water table, the Contractor is responsible for damages caused by this method.

After completing the work, the Contractor must restore sources of borrow material in accordance with subsection 205.03.H.2.

The Contractor is responsible for necessary construction, maintenance, and rehabilitation of routes used to haul borrow material, unless otherwise required by the contract. The cost to build and maintain routes to haul borrow material is included in the contract unit price for the relevant pay items. The Contractor is responsible for damages caused by hauling operations in accordance with section 107.

The Contractor must make provisions for haul routes involving a private railroad crossing in accordance with subsection 107.20.

105.04. Miscellaneous Quantities. If it is not possible to determine the locations and quantities of a pay item until after construction has begun, the plans will reflect a miscellaneous quantity. If the pay item with the miscellaneous quantity involves the purchase of materials, the Contractor must not order those materials until the Engineer has determined the actual quantity. Quantities may be adjusted by the Engineer as the work progresses.

105.05. Approval of Materials Incorporated into the Work. The Engineer may inspect materials that the Contractor will incorporate into the work at any time and at any place during the preparation, storage, and use of the materials. The Engineer will perform inspections of the materials, including sampling and testing, to determine if the material meets the contract requirements.

If the Engineer inspects the materials at the plant, the Contractor must ensure the producer, supplier, or manufacturer provides and maintains accommodations, for the exclusive use of the Engineer in performing tests.

A. **Approval by Certification or Qualified Products List.** A materials certification or inclusion on the *Qualified Products List* is not to be construed as Department acceptance, warranty, or guarantee that the material provided by the Contractor meets the requirements of the contract. If the Contractor chooses to obtain materials under certification or from the *Qualified Products List*, the Contractor must ensure the supplier provides materials that meet the contract requirements.

If the Department approves the use of certified materials or materials from the *Qualified Products List*, the Contractor is responsible for removal and replacement of nonconforming materials, even after final acceptance, unless the Contractor can prove all of the following:

1. The Contractor provided the notice required by subsection 105.01.C.
2. The Contractor provided the Department a reasonable time to sample, test, or inspect the material prior to incorporation into the work.
3. The Contractor did not know, and had no reason to know through reasonable inquiry, that substandard materials had been supplied.
4. The materials provided matched the material described in the certification statement or Qualified Products List.
5. The material described in the certification statement or *Qualified Products List* conform to the requirements in the specification.

The Contractor must notify the Engineer if the Contractor has, or by reasonable inquiry should have, reason to believe that a material supplier, producer, or manufacturer's circumstances have changed so that the quality of the materials certified for use on the project or materials on the *Qualified Products List* might not meet the contract requirements.

B. **Approval by Test.** The Contractor must provide such facilities as may be required by the contract for the Engineer to collect samples of materials and forward the samples to the testing laboratory. The materials represented by the samples being tested are not to be used until the Engineer determines that the materials meet the contract requirements. The Contractor must provide required samples to the Engineer at no additional cost to the Department. The Contractor must prepay transportation charges for shipment of samples to the testing laboratory designated by the Department. The Department will test these samples at its own expense.

105.06. Storage of Materials. The Department may designate portions of the right-of-way or other Department property on the plans as possible locations for storing materials, in accordance with subsection 104.12. The Contractor must restore locations used for storage to pre-existing condition and in accordance with section 205.

The Contractor must store materials as follows:

A. In a manner that will preserve the quality of the materials and prevent damage to existing woody vegetation not identified for removal.
B. Protect items susceptible to damage.

C. In a location that does not prohibit or delay the Engineer's inspections.
D. On private property only if approved by the owner and lessee in writing. If storing materials on private property, the Contractor must provide a copy of the written permission to the Engineer.

If the Engineer approved materials before the Contractor stored them, the Engineer may inspect the materials again before the Contractor incorporates them into the work.

105.07. Handling and Transporting Materials. The Contractor must handle materials in a manner that will preserve the quality of the materials.

The Contractor must transport materials using vehicles constructed and maintained to prevent loss or segregation of materials.

105.08. Nonconforming Materials.

A. **Nonconforming Materials Identified before Incorporation into the Work.** The Engineer will take one of the following actions for nonconforming materials identified before incorporation into the work:

1. The Engineer will reject the nonconforming materials and direct the Contractor to correct the rejected materials or remove the rejected materials from the project and replace with materials that meet the contract requirements. The Contractor must correct or remove and replace the rejected materials at no additional cost to the Department. Before incorporating corrected materials into the work, the Contractor must obtain the Engineer's approval.
2. The Engineer will allow the nonconforming materials to be incorporated into the work and will make a reduction in the contract unit price for the relevant pay item or accept a guaranty bond in accordance with subsection 104.04.

B. **Nonconforming Materials Identified after Incorporation into the Work.** The Engineer will take one of the following actions for nonconforming materials identified after incorporation into the work:

1. The Engineer will reject the nonconforming materials in accordance with subsection 104.04.
2. The Engineer will allow the nonconforming materials to remain in place and will make a reduction in the contract unit price for the relevant pay item or accept a guaranty bond in accordance with subsection 104.04.

105.09. Materials not Incorporated into the Work. Before the Engineer will grant final acceptance, the Contractor must remove materials not incorporated into the work from the project in accordance with subsection 205.03.P, except for materials specially produced for the project.

The Department may purchase the materials specifically produced for the project but not incorporated into the work. If the Department decides to purchase these materials, the

Department will only purchase the surplus quantity of these materials not incorporated into the work. The surplus quantity is the difference between the quantity of the material shown on the plans and the actual quantity of materials incorporated into the work. The Department will only pay the Contractor for the cost to produce, deliver, and handle these materials in accordance with subsection 109.05.C, excluding overhead and profit. Any specifically produced material not purchased by the Department, will remain the Contractors and must be removed from the project prior to final acceptance.

105.10. Source of Steel and Iron. The Contractor must provide steel and iron materials, for permanent incorporation into the work, that were produced only in the United States. FHWA may grant a waiver for steel and iron materials if they are not produced in sufficient and reasonably available quantities that are of satisfactory quality. Steel and iron materials include steel, steel products, and products that include steel components.

The Contractor must ensure that the manufacturing processes, including the application of coatings, for these materials and products occur in the United States. The application of coatings includes processes that protect or enhance the value of the material to which the coating is applied.

The Contractor may provide a minimal amount of foreign steel materials on the project, if the total invoice cost of the foreign steel materials permanently incorporated in the project does not exceed 0.1 percent of the original contract amount or $2,500, whichever is greater. The Department defines the total invoice cost as the total value of the foreign steel materials delivered to the project.

The Contractor must submit written certification of compliance with the requirements of this subsection to the Engineer.

Section 106. RESERVED

Section 107. LEGAL RELATIONS AND RESPONSIBILITIES TO THE PUBLIC

107.01. Laws to be Observed. The Contractor must be familiar with all state and federal laws, rules, executive orders, regulations, agricultural quarantines, local ordinances, and State Administrative Board resolutions that are current at the date of the advertisement and that supplement the contract or affect the equipment and materials used in the proposed construction, those employed on the work, and the conduct of the work. The Contractor must hold harmless and indemnify the Department and its representatives against any claim arising from any violation.

It is the Contractor's responsibility to determine what the laws require and then, at the sole expense of the Contractor, to perform the work required by the contract in whatever manner may be necessary to comply with all applicable laws. The Contractor is liable to the Department for fines, assessments, remediation, or environmental response costs incurred by the Department because of the Contractor's failure to comply with federal, state, and local laws.

The Engineer has the authority to shut down affected operations if the Contractor does not comply with the applicable laws. The Engineer also has the authority to direct the Contractor to implement immediate remedial action to bring the affected operations into compliance. The Contractor is not entitled to an extension of time or compensation for delays, inconvenience, or any other cause attributed to the Engineer suspending the work or directing remedial actions to bring the affected operations into compliance with the applicable laws.

Pursuant to the Elliot-Larsen Civil Rights Act, MCL 37.2101 et sec., the Contractor agrees not to discriminate against an employee or applicant for employment with respect to hire, tenure, terms, conditions, or privileges of employment, or a matter directly or indirectly related to employment, because of race, color, religion, national origin, age, sex, height, weight, or marital status.

Pursuant to the Persons with Disabilities Civil Rights Act, MCL 37.1101 et seq., the Contractor agrees not to discriminate against an employee or applicant for employment with respect to hire, tenure, terms, conditions, or privileges of employment, or a matter directly or indirectly related to employment, because of a disability unrelated to the individual's ability to perform the duties of a particular job or position.

Pursuant to the Davis-Bacon and Related Acts contained in 29 CFR, Parts 1, 3 and 5 and Michigan Law, the Contractor must comply with all labor compliance provisions in the contract and as specified in the current written Department procedures for prevailing wage compliance oversight.

107.02. Permits and Licenses. The Contractor must obtain and pay for permits and licenses required by the contract and necessary for the lawful prosecution of the work, unless otherwise issued to or by the Department.

A. **Reimbursement of Fees.** The Department will reimburse the Contractor for the following:

1. Permit fees required by local government agencies to construct work as required by the contract; and
2. That portion of deposits or cash bonds required by local government agencies charged for inspection fees.

B. **Permits.** The Contractor must follow the requirements outlined in the permits issued to the Department. If the proposed work or work methods necessitate a change to previously issued permits, the Contractor must provide a written request to the Engineer detailing the proposed changes.

This requirement includes, but is not limited, to the following permits:

1. Natural Resources and Environmental Protection Act, MCL 324.101, et seq.:
   a. Part 31, Water Resources Protection (Floodplains);
   b. Part 31, National Pollutant Discharge Elimination System (NPDES);
   c. Part 301, Inland Lakes and Streams; and
   d. Part 303, Wetland Protection.
2. U.S. Army Corps of Engineers' Section 404, Dredge and Fill; and Section 10, Navigable Waterway.
3. U.S. Coast Guard Section 9, Navigable Waterway.
4. Federal Aviation Administration permits.

The Contractor must not proceed with the change until the Department provides written approval. The Department's approval of the change will require internal coordination and the Contractor should therefore anticipate some delay. If the Department determines the requested change is detrimental to the environment, the Department will not submit a permit revision request to the permitting agency. The Contractor is not entitled to an extension of time or compensation for delays, inconvenience, or any other cause attributed to obtaining, or the inability to obtain, the permit changes, unless the need for the permit change was the result of a contract revision in accordance with subsection 103.02.

107.03. Patented Processes and Materials. The Contractor must defend all patent infringement suits resulting from the use of designs, devices, material, or processes employed to construct the work as required by the contract. The Contractor must hold harmless and indemnify the Department and its representatives against suits or claims for royalties, damages, and costs.

The Contractor is responsible for submitting to the Engineer a written statement from the patentee or licensee for plans, not supplied by the Department, that embody the use of any patented process, device, or design. The statement must set forth the exact terms under which the plans are to be used and the fixed price for which the Contractor may use the plans, processes, devices, or designs without further liability.

107.04. Federal Aid Participation. If any federal laws, rules, or regulations conflict with any provisions of a federally assisted contract, the federal requirements will prevail, take precedence, and be in force over and against such provisions.

If the cost of the contract work includes federal participation, the work will be under the supervision of the Department, but is subject to the inspection and approval of the proper officials of the United States Government. Inspections made by authorized federal representatives will not make the United States Government a party to the contract and will not interfere with the rights of the contract parties.

The making or use of false statements by the Contractor relating to documentation is a felony punishable by a fine of no more than $10,000, imprisonment for no more than 5 years, or both. Making or using false claims for obtaining payment against federal funds subjects violators to forfeiture of $10,000 for each violation. This is in accordance with the anti-fraud statute originating from the Federal-Aid Road Act of 1916.

107.05. Sanitary Provisions. The Contractor must provide and maintain, in a neat and sanitary condition, facilities for the Contractor's employees to comply with the requirements and regulations of the federal, state, and local health authorities, and must take precautions to avoid creating unsanitary conditions.

The Contractor must remove temporary sanitary facilities from the project limits before final acceptance. The Contractor must construct, maintain, and remove temporary sanitary facilities at no additional cost to the Department.

107.06. Furnishing Right-of-Way. The Department will be responsible for the following:

A. Securing right-of-way necessary for the project before construction; and
B. Identifying in the contract any right-of-way that the Department has not secured.

107.07. Protection and Restoration of Property. The Contractor must restore, at no additional cost to the Department, public and private property damaged because of acts or omissions by the Contractor and the employees and agents of the Contractor, to a condition equal to that existing before the damage occurred. If the Contractor neglects to make restoration within 7 days of receiving written notice from the Engineer, or as otherwise required by applicable laws or regulations, the Engineer may proceed to make the restoration. The Engineer will deduct the cost of the restoration from monies that are or may become due the Contractor.

107.08. Land Monuments and Property Corners. The Contractor must locate and preserve existing public land survey corners, property-controlling corners, and alignment control points as shown on the plans or as directed by the Engineer. The Contractor must provide a professional surveyor, licensed in the State of Michigan, to perform work necessary to maintain the corners. This work must be completed and will be paid for in accordance with section 821.

107.09. Archaeological and Historical Findings. If the Contractor finds what appear to be items of potentially archaeological or historical significance (such as bones, artifacts, or buried foundations), the Contractor must immediately stop operations in that location and notify the Engineer. Any discovered items are the property of the State of Michigan. The Engineer will investigate and contact the Department Archaeologist for consultation and direction. If bones are discovered and there is no reasonable doubt that they are human bones, the Engineer will immediately call the respective local law enforcement agency according to Michigan law. The Engineer, in consultation with the Department Archaeologist will direct the Contractor either to resume operations or to continue the suspension of operations, in accordance with subsection 104.01.B.

The Contractor must cooperate in the recovery of archeological and historical items, as directed by the Engineer. The Department will pay the Contractor and grant an extension of time for any delay related to the recovery of archeological and historical items as extra work in accordance with subsection 103.02.

107.10. Indemnification, Damage Liability, and Insurance.

A. **Indemnification.** The Contractor must hold harmless, indemnify, and defend in litigation the State, the Commission, the Department, and their agents and employees against claims for damage to public or private property and for injuries to persons arising out of the performance of the work until the Contractor achieves satisfactory final inspection in accordance with subsection 109.07.C.1. The Contractor will not be responsible for claims that result from the sole negligence or willful acts or omissions of said indemnitee.

B. **Workers' Compensation Insurance.** The Contractor must carry the necessary Workers' Compensation Insurance and must submit a certification that it carries Workers' Compensation Insurance to the Department in accordance with subsection 102.14.

C. **Bodily Injury and Property Damage.** The Contractor must carry adequate insurance, satisfactory to the Department, to afford protection against claims for damage to public or private property and injuries to persons arising out of the performance of the work until the Contractor achieves satisfactory final inspection in accordance with subsection 109.07.C.1. If required by the contract, the Contractor must also carry adequate insurance to protect the owner of premises on or near which construction operations are to be performed. Copies of completed certificates of insurance must be submitted to the Department, in accordance with subsection 102.14.

1. **Bodily Injury and Property Damage Other Than Automobile.** Unless otherwise required by the contract, the Contractor must provide the following minimum limits of property damage and bodily injury liability:

   Bodily Injury and Property Damage Liability:

Each Occurrence	$1,000,000
Aggregate	$2,000,000

This insurance must include coverage for the following:

a. Underground damage to facilities due to drilling and excavating with mechanical equipment; and
b. Collapse or structural damage to structures due to blasting or explosion, excavation, tunneling, pile driving, cofferdam work, or the moving or demolition of buildings.

2. **Bodily Injury Liability and Property Damage Liability Automobile.** Unless otherwise required by the contract, the Contractor must provide the following minimum limits of bodily injury liability and property damage liability:

Bodily Injury Liability:	
Each Person	$500,000
Each Occurrence	$1,000,000
Property Damage Liability:	
Each Occurrence	$1,000,000
Combined Single Limit for Bodily Injury and Property Damage Liability:	
Each Occurrence	$2,000,000

3. **Umbrella Policy.** The Contractor may meet the requirements of subsection 107.10.C.1 and subsection 107.10.C.2 through an umbrella policy.

4. **Owners Protective Liability.** The Contractor must ensure that the insurer extends bodily injury and property damage protection, including general supervision of work performed, to the State, the Commission, the Department, and their agents and employees and, as indicated by the identity of the contracting parties, to participating political subdivisions and public corporations. The minimum limit will be $1,000,000.

   Instead of the Owners Protective Liability, the Contractor must add to their Bodily Injury and Property Damage Policy:

   a. **Additional Insured.** The Bodily Injury and Property Damage Policy must name as additional insured the State, the Department, and the Commission and all agents and employees thereof and, where indicated by the identity of the contracting parties, the protection must be extended to all participating political subdivisions and public corporations.
   b. **Per Project Aggregate.** The Bodily Injury and Property Damage Policy must be endorsed with an endorsement that provides the General Aggregate Limit to each designated construction project.
   c. **Umbrella Policy.** An umbrella policy with a $2,000,000 limit must be provided.

D. **Notice.** The Contractor must ensure that all insurance policies and binders include an endorsement by which the insurer agrees to notify the Department in writing at least 30 days

before there is a cancellation or material change in coverage. The Contractor must stop operations if any insurance is canceled or reduced below the specified limits, and must not resume operations until new insurance is in force.

E. **Damage Claims.** The Contractor is responsible for acting on damage claims that occur from execution of the contract until the Contractor achieves satisfactory final inspection in accordance with subsection 109.07.C.1. The Contractor may act directly with the claimant or through the claimants' insurance carrier.

1. **Damage Claim Program.** Before beginning construction on the project, the Contractor must submit a written damage claim program for approval by the Engineer. The damage claim program must outline the Contractor's plan for the investigation and disposition of damage claims. The Contractor must meet with the Engineer to discuss the damage claim program and develop a mutual understanding of how the Contractor will govern, administer, and enforce the program.

2. **Damage Claim Officer.** The Contractor must provide written notification to the Engineer of the name and contact information for the Contractor's Damage Claim Officer. The Damage Claim Officer is the person with the authority and responsibility to administer the Contractor's damage claim program.

3. **Damage Claim Process.** The Engineer will submit damage claim forms received by the Department to the Contractor within 14 days from the first contact with the claimant. The Contractor must act on damage claims within the time frames specified in this subsection, and must submit to the Engineer a report on damage claims received that includes information as specified in subsection 107.10.E.5.

    a. **Claims Less Than or Equal To $1,500.** The Contractor must reach final disposition and notify the claimant in writing within 60 calendar days of receipt of the damage claim form from the Engineer. If the Contractor fails to reach final disposition and notify the claimant within 60 calendar days, the Engineer will enforce subsection 107.07. In this circumstance, the Department defines restoration as payment to the claimant for alleged damages as documented on the original damage claim form. If payment is made based on failure to meet the time requirement, the claimant must sign a waiver indicating that payment was made because of a failure to meet the time requirement not because of the merit of the damage claim. Before the 60 calendar days expires, the Contractor may request an extension of no more than 30 calendar days for documented circumstances beyond the Contractor's control. The Contractor must make this request in writing to the Engineer.

    b. **Claims Greater Than $1,500.** The Contractor must reach final disposition and notify the claimant in writing within 120 calendar days of receipt of the damage claim form from the Engineer. If the 120 calendar days expire prior to final acceptance of the project, the

Engineer will withhold the amount of the damage claim from payments to the Contractor until the Contractor reaches final disposition and notifies the claimant.

4. **Final Disposition.** The Department will withhold, from the final estimate or monies due or to become due the Contractor, an amount not exceeding the aggregate amount of all outstanding and unresolved damage claims until final disposition of all damage claims. Final disposition for damage claims $1,500 or less must include payment, settlement, or denial of the damage claim by the Contractor's insurer or the Contractor. Final disposition for damage claims over $1,500 must include payment, settlement, or denial of the damage claim by the Contractor's insurer, or settlement or payment by the Contractor.

5. **Documentation Requirements.** The Contractor must use the Department's standard forms for processing damage claims, unless otherwise approved by the Engineer. The Contractor must submit to the Engineer a report upon final disposition of each damage claim. The report must include the following information:

   a. Location of the incident;
   b. Specific work activities during the day and time of damage claim;
   c. Detailed weather and road conditions;
   d. Traffic movements, signing, and equipment in use;
   e. Any unusual occurrences;
   f. Measurements taken at the time or location of the incident;
   g. Records of all contact with Engineer or claimant to discuss disposition;
   h. Other documentation pertinent to the damage claim; and
   i. Report of final disposition of damage claim.

107.11. Contractor's Responsibility for the Work. Until the Contractor achieves satisfactory final inspection in accordance with subsection 109.07.C.1, the Contractor is responsible for the work and must take every precaution against injury to the public or otherwise, or damage to public or private property due to the elements or other causes. The Contractor is responsible for any expense resulting from and of the aforementioned injuries or damages. The Contractor must rebuild, repair, restore, and make good any injury or damage to the work before the Contractor achieves satisfactory final inspection in accordance with subsection 109.07.C.1, and at no additional cost to the Department, except for injury or damage that is beyond the Contractor's control and not the fault of the Contractor, including, but not limited to, the following:

A. Acts of God or of the public enemy;
B. Acts of the Government;
C. Geohazards found by the Engineer to have been unavoidable;
D. Ordinary wear and tear on sections of the road opened to traffic as required by the contract or ordered by the Engineer; and
E. Maintenance and third party damage responsibility for portions of the work that have been granted partial acceptance, or designated for delayed acceptance, by the Department in accordance with subsection 109.07.

The Contractor must obtain approval from the Engineer for use of drainage facilities (existing or proposed according to the contract), belonging to the Department or another state or local government agency. The Engineer and the Contractor must determine the condition of the facilities and make arrangements to allow use. Before the Contractor achieves satisfactory final inspection in accordance with subsection 109.07.C.1, the Contractor must restore drainage facilities used or affected by the Contractor's operations to a condition that is equal to or better than the condition of the facilities before the Contractor's use. Drainage facilities include catch basins, manholes, inlets, sumps, sewers, lift stations, outlets, and open drainage systems.

In case of suspension of work, the Contractor is responsible for the proper storage of materials and providing suitable drainage of the project.

107.12. Contractor's Responsibility for Utility Property and Services. The Contractor must comply with the MISS DIG Underground Facility Damage Prevention and Safety Act, MCL 460.721, et seq. This does not relieve the Contractor of its responsibility to notify utility owners identified in the contract that are not part of the MISS DIG Systems, Inc.

The Department's freeway lighting system, ITS, and other miscellaneous electrical systems are not a part of MISS DIG Systems, Inc. The Contractor must contact the maintenance representative at the MDOT Region Office before starting work near lighting systems, ITS, and traffic systems. The Contractor must not start this work until the Department has staked the lighting systems, ITS, and traffic systems.

The Contractor must not start work until arrangements are made for the protection of adjacent utilities, or other property where damage might result in expenses, loss, or inconvenience.

The Contractor must cooperate with the utility owner in the removal, relocation, and reinstallation work.

107.13. Personal Liability of Public Officials. The Commission, Director, Engineer, and their authorized representatives are not liable, either personally or as officials of the State, for exercising the authorities granted to them by the contract. It is understood that they act solely as agents and representatives of the State.

107.14. No Waiver of Legal Rights. The Department and the Commission are not precluded or estopped by measurements, estimates, or certificates made before or after the completion, acceptance, and payment for the work, from showing the true amount and character of the work performed and materials provided by the Contractor, nor from showing that these measurements, estimates, or certificates are untrue or incorrectly made, or that the work or materials do not conform to the contract. The Department and the Commission are not precluded or estopped, notwithstanding measurements, estimates, or certificates and payments from recovering from the Contractor and the Surety overpayment that may have been caused by the erroneous measurement, estimate or certification and damages it may have sustained by reason of the

Contractor's failure to comply with the terms of the contract. Neither the acceptance by the Director or by the Director's representative, nor payment for or acceptance of the whole or part of the work, nor extensions of time, nor possessions taken by the Department will operate as a waiver of portions of the contract or of power reserved, or right to damages provided. A waiver of any breach of the contract is not a waiver of any other or subsequent breach.

107.15. Compliance with Laws; Environmental Protection. The Contractor must take the measures during the performance of the work that are necessary to comply with federal, state, and local laws and regulations for the protection of the public health, safety, welfare, and environment. Unless the contract provides otherwise, the costs related to complying with these laws and regulations are included in the contract unit prices for related items of work.

The following are specific requirements with regard to environmental protection matters.

A. **Control of Air Pollution.**

1. **Dust Control.** During the construction of a project, the Contractor must maintain adequate dust control measures to prevent any detriment to the safety, health, welfare, or comfort of any person or damage to property, residence, or business. If the contract does not contain a pay item for dust control, the cost of the dust control is included in the contract unit price for other pay items.

2. **Hot Mix Asphalt Plants, Concrete Plants, and Crushing Plants.** All HMA plants, concrete batch plants, and crushing plants must be in compliance with the Natural Resources and Environmental Protection Act, MCL 324.101, et seq., including but not limited to Part 55 Air Pollution Control, MCL 324.5501 et seq., and the rules of the MDEGLE.

   All portable HMA plants, portable concrete batch plants and portable crushing plants are required to have an MDEGLE permit to install.

3. **Open Burning.** The Contractor must obtain the Engineer's approval before burning trees, brush, or stumps at the site of land clearing operations within the project limits. The Contractor must burn at least 1,400 feet from the limits of any incorporated municipality and must comply with any local ordinances or state regulations. Adequate control measures must be maintained to prevent any detriment to the safety, health, welfare, or comfort of any person or damage to property, residence, or business. Note that a burn permit from the MDNR is required for any open burning whenever the ground is not snow covered. A burn permit may also be required from the local unit of government. Any individuals that allow a fire to escape will be in violation of the Natural Resources and Environmental Protection Act, MCL 324.101, et seq., and will be required to reimburse the costs of suppressing the fire.

4. **Demolition or Renovation Notification.** The Contractor must not begin demolition of any building or structure without first submitting the appropriate notifications as required by the contract.

The Contractor must provide copies of all notifications to the Engineer prior to beginning demolition or before the removal of any regulated asbestos containing material.

B. **Construction Site Storm Water Runoff.** The Contractor must perform the work in a manner that will prevent sediment from entering watercourses, streams, lakes, and wetlands. In addition to the soil erosion and sedimentation control requirements of section 208, the Contractor must employ good housekeeping and pollution prevention practices to prevent construction related pollutants from entering the storm water drainage system or being carried outside of the project limits by storm water runoff. Potential sources of storm water pollutants include, but are not limited to, the following:

1. Materials storage areas;
2. Equipment maintenance and refueling areas;
3. Construction waste receptacles;
4. Concrete truck clean-out areas;
5. Sanitary facilities; and
6. Field office sites.

C. **Control of Hazardous and Polluting Materials.** The Contractor must use, store, and dispose of hazardous materials, hazardous waste, toxic materials, or polluting materials in accordance with applicable federal, state, and local laws and regulations.

1. **Fueling and Equipment Maintenance Area.** The Contractor must store fuel, perform equipment maintenance, and clean or wash vehicles and equipment, including concrete trucks, in an area equipped as follows:

   a. Located at least 50 feet from storm drainage systems, wetlands or watercourses;
   b. Paved or lined with a surface that will protect the soil, ground water, and surface water;
   c. Surrounded by a containment berm; and
   d. Equipped with a sump to collect and properly dispose of waste material.

   The Contractor may propose a written plan to provide alternate protective measures for fueling and equipment maintenance areas to the Engineer for approval.

   The Contractor must restore these areas in accordance with the project clean-up requirements in section 209.

2. **Equipment Cleaning and Washing.** The Contractor must:

   a. Limit vehicle and equipment cleaning or washing within the project limits to that necessary to control vehicle tracking;
   b. Notify the Engineer before cleaning or washing vehicles or equipment within the project limits with soap, solvents, or steam;

c. Contain any resulting waste and recycle or dispose of the waste in accordance with state and federal regulations;
d. Not use materials containing petroleum distillates to clean vehicles or equipment and must minimize the use of solvents for this purpose;
e. Inspect sumps regularly and remove liquids and sediments as necessary;
f. Use as little water as possible if washing vehicles or equipment with water; and
g. Equip hoses with positive shutoff valves.

3. **Storage of Materials on or under Bridges and Structures.** The Contractor must not store equipment or materials with the following USDOT Material Class Designations under, or within 50 feet of Department or local agency owned bridges and structures:

a. Class 1 – Explosives;
b. Class 2 – Flammable Gas, Non-Flammable Gas, Inhalation Hazard, Oxygen;
c. Class 3 – Flammable Liquids – Flammable, Fuel Oil, Combustible, Gasoline;
d. Class 4 – Flammable Solids, Spontaneously Combustible & Dangerous When Wet;
e. Class 5 – Oxidizer and Organic Peroxide;
f. Class 6 – Toxic (Poisonous), Inhalation Hazard & Infectious Substances;
g. Class 7 – Radioactive;
h. Class 8 – Corrosive; and
i. Class 9 – Miscellaneous

The Contractor must not store plastic, polyethylene, or other petroleum-based products, or other flammable or combustible materials under, or within 50 feet of bridges and structures owned by the Department or local agencies.

Staging and storage of construction equipment utilizing these materials will be allowed on the bridge decks, as it relates to the Contractor's active construction operations. The Engineer will approve appropriate protective measures for fueling and maintenance of equipment on bridge decks.

107.16. Forest Protection. If performing work within or adjacent to State or national forests, the Contractor must comply with relevant regulations of the State and Federal agencies. In national forests, the Contractor must contact the United States Department of Agricultural Forest Service Forest Supervisor, for the appropriate section of the State, regarding the work the Contractor will be performing within or adjacent to the forest land. In state forests, the Contractor must contact the local Unit Manager, Forest Resources Division, MDNR, regarding the work to be performed within or adjacent to the forest land.

The Contractor must observe sanitary laws and regulations with respect to the performance of work in forest areas. The Contractor must keep the forest areas in an orderly condition, dispose of refuse, and obtain permits for the construction and maintenance of construction camps, stores, warehouses, residences, latrines, cesspools, septic tanks, and other structures according to the requirements of the Forest Supervisor or State Forester.

The Contractor must obtain permits before burning forest debris from clearing and grubbing operations, and require that employees and subcontractors take all precautions reasonably within their power to prevent and suppress forest fires including:

A. Assisting in preventing and suppressing forest fires at the request of Forest officials; and
B. Making every possible effort to notify a Forest official at the earliest possible moment of the location and extent of any fire observed in the area.

107.17. Use of Explosives. Before using explosives on the project, the Contractor must obtain prior written approval from the Engineer. Such approval does not relieve the Contractor of liability or responsibility for damages resulting from the use of explosives. The Contractor must comply with all laws, regulations, and ordinances and exercise the utmost care not to endanger life or property, including new work.

107.18. Work Over Navigable Waters. The Contractor must perform work on or over navigable waters in accordance with any permits issued by the controlling authority.

107.19. Hauling on Local Roads and Streets. The Contractor must ensure haul loads are within the legal load limits established by the local government agency. Before hauling materials on local roads and streets, the Contractor is responsible for obtaining approval from the respective local government agency. The Contractor is responsible for preventing the tracking of material onto local roads and streets, and must remove such material at no additional cost to the Department.

107.20. Private Railroad Crossing for Haul Purposes. If a temporary railroad crossing is necessary, the Contractor is responsible for the following:

A. Requesting the railroad company to construct the temporary crossings and notifying the railroad company in advance of Contractor's use of the temporary crossings. This is subject to the Contractor meeting the railroad company's requirements, including executing agreements and providing insurance coverage.
B. Determining and complying with the requirements of the railroad company covering the location, installation, protection, maintenance, use, and removal of the temporary crossing. Unless otherwise required by the contract, the costs related to the temporary crossing, including but not limited to the following, are included in the contract unit prices for other pay items:
1. Installation, protection, maintenance, and removal of the temporary crossing;
2. Flaggers;
3. Construction engineering inspection by the railroad company;
4. Contractual liability insurance for the temporary crossing and any other insurance required by the railroad company; and
5. Incidental work, such as drainage facilities and the removal, alteration, and replacement of railroad fences.

107.21. Open to Traffic. The Contractor must not open the project or sections thereof to traffic until approved by the Engineer. The Engineer's approval of the project or section thereof for traffic does not constitute partial or final acceptance of the project or any part of it, or a waiver of any provision of the contract. The Contractor is not responsible for the costs of maintaining the section of the project opened for traffic.

If the Engineer approves the entire project or any section thereof for traffic and the Contractor opens it to traffic before final acceptance and final payment, the Contractor must perform the remainder of the work in a manner that causes the least obstruction to traffic. The Contractor must make provisions for the safety of traffic as required by the contract. Legal weight restrictions, established by the Michigan Vehicle Code, MCL 257.1, et seq., local ordinances, or legal posting, apply to sections of the project opened to traffic.

Before the seasonal suspension, the Engineer will determine the work the Contractor must complete to bring the project to an acceptable condition for traffic and winter maintenance, including necessary traffic and erosion control measures. Until the Contractor completes this work, the Engineer will not designate the project as approved for traffic.

On sections of the project opened to traffic, the Contractor must correct damage due to defective materials, to faulty workmanship, to negligent acts of the Contractor, and to natural causes (except as provided in subsection 107.11), at no additional cost to the Department.

107.22. Construction Staging Areas. The Contractor must not use any public recreation area as a staging area, marshalling yard, storage facility, or for any other construction support unless it is specified in the contract.

Public recreation areas include: parks, trails, game areas, wildlife and waterfowl refuges, playgrounds, golf courses, athletic fields or similar areas which are publicly owned by public school districts, local, state, or federal governments.

Any agreements negotiated between the Contractor and the owner of the public recreation area, before or after the award of the contract will not be considered valid by the Department.

If the Engineer determines the Contractor is in non-compliance with this subsection, the Engineer may terminate the contract, in accordance with subsection 108.12. This will include the immediate restoration of the public recreation area at the Contractor's cost.

107.23. National Pollutant Discharge Elimination System Inspection and Response. Part 31 Water Resources Protection, MCL 324.3101 et seq., and Part 21 Wastewater Discharge Permit Rules/National Pollutant Discharge Elimination System (NPDES), MCL 324.21101 et seq., apply to projects with a potential for disturbance of land totaling 5 acres or greater during construction. The Department will file a Notice of Coverage with the MDEGLE for these projects.

The Engineer will assign a Storm Water Management-Construction Site or Soil Erosion and Sedimentation Comprehensive Inspector to perform project reviews for NPDES compliance. All deficiencies will be brought to the attention of the Contractor. The project will be inspected every 7 days or within 24 hours, including weekends regardless if the Contractor is working, after a precipitation event that results in discharge from the site. A discharge is defined as a storm water run-off that does not infiltrate into the ground and leaves the construction site or enters waters of the state after a precipitation event.

The Contractor has a period of 5 calendar days in which to complete, or have completed, all corrective actions except those of an emergency nature required as a result of the NPDES inspection. Corrective actions of an emergency nature will be determined by the Engineer and include sedimentation that occurs on or in any project facilities, waters of the state, or erosion that affects the support of the roadbed or the safety of the public. Emergency corrective actions must be completed in an acceptable manner by the Contractor within 24 hours after notification.

107.24. Federal Aviation Administration Notification for Structure Work. The Contractor is required to provide notice to the FAA, and/or local airport zoning authority if any proposed permanent structures or temporary structures, including but not limited to temporary scaffolding, forms, poles, and crane booms, exceed the criteria below, no matter the duration and acquire any necessary permits if the proposed construction or alteration of permanent or temporary structures meets any of the following criteria:

A. Anything over 200 feet above ground level (AGL) at the project site, including temporary construction and/or equipment;
B. Any changes or variations that exceed the heights or locations set forth in permits included in the contract; or
C. Any changes or variations that exceed the height set forth in the contract, if permits are not included in the contract documents.

The Contractor must schedule operations to allow for the maximum 45-day FAA review period. Extensions of time will not be granted for failure to submit the FAA notifications 45 days prior to commencement of construction activities subject to notification requirements.

The Department will include a copy of any permits such as, FAA, Michigan Tall Structure and local or municipal airport zoning, obtained by the Department.

Section 108. PROSECUTION AND PROGRESS

108.01. Subcontracting of Contract Work. The Contractor must follow the Department's written subcontracting procedures. The Contractor must use its own organization to perform work amounting to not less than 35 percent of the original contract amount. Materials produced and/or purchased by the Contractor may be included in the 35 percent required to be performed. The phrase "its own organization" only includes workers employed and paid directly, inclusive of employees who are employed by a lease agreement and equipment owned and rented with or without operators. Employees or equipment of a subcontractor, assignee, or agent of the Contractor will not be considered part of "its own organization". Leased employees may only be included in "its own organization" if the Contractor meets all the following conditions:

A. The Contractor maintains control over the supervision of the day-to-day activities of the leased employees;
B. The Contractor remains responsible for the quality of the work of the leased employees;
C. The Contractor retains all power to accept or exclude individual employees from work on the contract; and
D. The Contractor remains ultimately responsible for the payment of predetermined minimum wages, the submission of payrolls, statements of compliance and all other federal regulatory requirements.

The Contractor must only issue subcontracts to subcontractors that are prequalified by the Department to perform the classification of work proposed, if applicable. The Department's prequalification of the subcontractor is for the benefit of the Department and is not for the benefit of the Contractor or any other person. The Department's prequalification is not a guarantee or warranty of the subcontractor's ability to perform or complete the subcontracted work. No subcontractor or supplier may maintain an action against the Department for payment relating to the work. Any such action must be brought against the Contractor or other responsible party.

The amount of Specialty Classification Work performed will be deducted from the total original contract amount before determining the 65 percent available for subcontracting.

Form 1386 *Post Certification of Subcontract Compliance* should be referenced to determine if a subcontract is required for the contract work. Form FHWA-1273 is required to be incorporated into each subcontract prior to signature on federally funded projects and has been incorporated into MDOT Form 1302-FED. Use Form 1302-FED on all projects with federal funding. Use Form 1302-State for all other projects. Written consent of the Department is required to sell or assign any portion of the contract. No portion of the contract may be subcontracted prior to submitting a copy of the applicable Form 1302 (FED or State) cover page and pay items page to the Engineer, before the start of the work associated with the subcontract.

Subcontracting any portion of the work does not relieve the Contractor of full responsibility for the performance of the contract. The Contractor further agrees that every subcontract entered for the performance of the contract will contain a provision requiring nondiscrimination in employment

binding upon each subcontractor. Breach of this covenant may be regarded as a material breach of the contract.

The Department will determine the value of subcontracted work by multiplying the number of units of a subcontracted pay item by the contract unit price for that pay item. If only a portion of a pay item is subcontracted, only that portion of the work to be performed by a subcontractor will be used for determining the percentage of the total work subcontracted. The Department will determine if the subdivision of the subcontracted pay item and the unit price is reasonable. Bonds furnished by the subcontractor do not reduce the Contractor's bonding requirements.

A subcontractor must perform not less than 50 percent of the total value of the subcontracted work within "its own organization". This requirement is also applicable to and binding upon successive subcontracts. If any subcontractor is working or subcontractor's equipment is being operated in violation of this subsection, the Engineer may direct the immediate removal of the subcontractor or the subcontractor's equipment. The Contractor is responsible for any costs or damages resulting from such removal. The Contractor's responsibilities in the performance of the work, in case of a subcontract, are the same as if the Contractor performed the subcontracted work with its own organization.

Before final acceptance, the Contractor must certify the subcontracting requirements have been met by completing Form 1386 *Post Certification of Subcontract Compliance*.

108.02. Limitations of Operations. Unless the contract requires or the Engineer approves otherwise, the Contractor must not perform construction operations on Sunday. The Contractor may perform emergency repairs or install proper protection of the work on Sundays.

The Engineer may require the Contractor to cease construction operations during holiday periods or at other times as may be determined to be in the interest of the public.

108.03. Competence of Workers. The Contractor must provide the labor to perform the work as required by the contract. The Contractor's workers must possess the skill and experience to perform the assigned work in accordance with the contract.

If the Engineer determines that any worker employed by the Contractor or by any subcontractor does not perform the work in a proper and skillful manner, or is intemperate or disorderly, the Engineer will issue a written direction for removal of the worker. The Engineer's written direction will state in detail the reasons for the removal of the worker including specific reference to the worker's offending conduct and the affected work operation(s). The Contractor may appeal the Engineer's direction, during which appeal the Engineer's direction will be suspended. The Contractor may not employ the removed worker again in any portion of the work without the Engineer's approval.

If the Engineer's direction stands and the Contractor fails to do either of the following, the Engineer may suspend the work by written notice, withhold partial payment, or both until the Contractor complies with the contract requirements:

A. Remove such worker or workers as required above; or
B. Provide the labor for the proper prosecution of the work.

108.04. Adequacy of Methods and Equipment. The Contractor must use equipment of sufficient size and in a mechanical condition necessary to perform the work required by the contract.

If the contract does not require specific methods and types of equipment to perform an item of the work, the Contractor may use any method or type of equipment that will accomplish the work in accordance with the contract.

If the contract requires specific methods and types of equipment to perform an item of the work and the Contractor wants to use another method or type of equipment, the Contractor must obtain the Engineer's approval before using the other method or type of equipment. The Contractor must submit a written request to the Engineer that includes a full description of the proposed methods and types of equipment and the reasons for requesting the substitution. If the Engineer approves the request, the Contractor remains fully responsible for performing the work in accordance with the contract. If, after a reasonable trial, the Engineer determines that the work performed is not in accordance with the contract, the Contractor must stop using the substitute method or type of equipment. The Contractor must remove and replace the non-conforming work, or take other corrective actions approved by the Engineer. The Contractor is not entitled to an extension of time or compensation for delays, inconvenience, or any other cause attributed to the failure of the Contractor's substituted method or type of equipment to accomplish the work in accordance with the contract, even if the Engineer approved of the substitution.

108.05. Prosecution and Progress . The Contractor must not begin work until after the award of the contract. After the Department notifies the Contractor of the award of the contract, the Contractor must perform the work according to the progress schedule and with sufficient resources to adequately complete the work within the contract time.

If the Contractor fails to perform the work in accordance with the approved progress schedule or the Department believes that the Contractor is not performing the work in a manner that achieves completion within the contract time, the Engineer may require the Contractor to provide an updated progress schedule, detailing the efforts required to meet the requirements of the progress clause. This requirement will not qualify as directed acceleration as stated in subsection 109.05.F. If the Contractor fails to perform as directed, the Engineer may place the Contractor in default in accordance with subsection 108.11.

If the Contractor fails to perform the work in accordance with the approved progress schedule, the Department may prevent the Contractor from bidding future contracts until the Contractor establishes a satisfactory rate of progress.

If the contract requires it, the Contractor must submit a critical path schedule using the critical path method (CPM). Upon approval the critical path method schedule will replace the progress schedule.

A. **Progress Schedule.**

1. **General.** The Department's approval of any schedule does not relieve the Contractor of its responsibilities to adjust labor and equipment forces or work schedules and provide sufficient materials to complete the work within the contract time.

   The Contractor must submit the progress schedule to the Engineer within 7 calendar days of award and prior to starting work. Progress schedule updates must be submitted within 7 calendar days of Engineer request. The Engineer will provide documented approval, comments, or rejection within 7 calendar days of receipt of the Contractor's submittal, resubmittal, or responses. The Contractor must resolve all responses within 7 calendar days of receipt of any Engineer requests or rejections.

   If the progress schedule is not approved within 30 calendar days of original submittal or if the Contractor fails to update the progress schedule, the Engineer may withhold all or part of contract payments until the progress schedule, or update, is approved.

   The cost of preparing and updating the progress schedule will not be paid for separately but will be considered included in other bid items.

2. **Progress Schedule Format and Content.** Unless the contract requires otherwise, the Contractor must submit a progress schedule using a diagramming method, bar chart or Form 1130 describing the work activities with the associated relationships.

   The progress schedule must reflect the scope of work and sequence of operations required by the contract, and must:

   a. Include and identify all activities that are the controlling operations;
   b. Include non-controlling and other activities to detail the work necessary to complete the contract including activities for submittals, working and shop drawing preparation, submittal review time for the Department, material procurement and fabrication, and the delivery of materials, plant, and equipment, third party operations, or other activities;
   c. Identify the planned start and completion dates for each activity.
   d. Provide a duration, ranging from 1 to 20 days, for each construction activity, breaking longer activities into two or more activities distinguished by the addition of a location or some other description;

e. Include a written narrative that provides a description of the planned work crews, work days per week, number of shifts per day, number of hours per shift, and holiday and seasonal suspensions or other non-work periods;
f. Include other pertinent information that helps define the overall plan to complete the contract or as requested by the Engineer; and
g. Include all contract specified dates.

The Contractor must allow for normal weather delays when developing the progress schedule.

The Department may allow overlapping or concurrent controlling operations if the Contractor provides a written explanation of the associated overlap or concurrent controlling operation for each occurrence. The Contractor must submit the explanation with the progress schedule.

3. **Progress Schedule Modifications.** The Contractor and the Engineer will assess progress and discuss the schedule as needed. Submit a modified progress schedule when requested by the Engineer.

   At a minimum, progress schedule updates will include the actual start and finish of each activity, percentage complete, and remaining durations of activities started but not yet completed.

   The Engineer may request a modified progress schedule when any of the following events occur:
   a. The Contractor's rate of progress falls behind that represented in the latest progress schedule;
   b. A delay or contract revision affects a controlling operation the contract time, or completion dates; or
   c. The Contractor revises the sequence of operations or plan to complete the contract from that represented in the latest progress schedule.

108.06. Determination of Contract Time for Work Day Contracts. Starting no earlier than on the 10th day after the Contractor receives the notice of award or on the date agreed upon between the Engineer and the Contractor, the Engineer will determine and charge work days in accordance with subsections 108.06.A, 108.06.B, and 108.06.C.

The Engineer will provide the Contractor with a written report of the number of work days charged to the contract each week within 6 days after the last day of the week covered by the report. If the Contractor disagrees with the number of work days charged in a report, the Contractor must notify the Engineer in writing and set forth the reasons for disagreement within 21 days after the last day of the week covered by the report. The Contractor's failure to notify the Engineer of disagreement within the times established in this paragraph constitutes acceptance of the Engineer's determination of the number of work days for that time period.

A. **Full Work Days.** The Engineer will charge full work days for the following days:

1. Every day the Contractor is able to perform work for six or more consecutive hours, beginning at the scheduled starting time, on a controlling operation with full and normal efficiency within seasonal limitations, except as listed in subsections 108.06.B or 108.06.C or as required by the contract;
2. Every day the Contractor elects to work for 6 or more consecutive hours, beginning at the scheduled starting time, or, on a controlling operation with full and normal efficiency within seasonal limitations, except as listed in subsections 108.06.B or 108.06.C or as required by the contract;
3. Sundays or holidays on which the Contractor performs work, if Sunday or holiday work is approved by the Engineer;
4. Days that the Contractor is unable to perform work on a controlling operation due to delayed delivery of materials, unless the Contractor identifies, and the Department verifies that the delayed delivery is the result of an industry-wide shortage;
5. Days that the Contractor is performing required work, designated by the Engineer, to make the project acceptable for traffic and winter maintenance including emergency work or erosion control maintenance before or during the seasonal suspension; and
6. Days on which a delay to or suspension of the work is the fault of the Contractor.

B. **Half Work Days.** The Engineer will charge half work days for the following days:

1. Days the Contractor is only able to perform work on a controlling operation for between 3 and 6 consecutive hours beginning at the scheduled starting time, for reasons beyond the Contractor's control and not the Contractor's fault or responsibility;
2. Days the Contractor elects to, perform work on a controlling operation for between 3 and 6 consecutive hours beginning at the scheduled starting time, for reasons beyond the Contractor's control and not the Contractor's fault or responsibility; and
3. Days the Contractor is unable to perform work on a controlling operation with full and normal efficiency, for reasons beyond the Contractor's control and not the Contractor's fault or responsibility, including work stoppages due to a labor dispute.

C. **No Work Day.** The Engineer will not charge work days for the following days:

1. Saturdays, unless provided for in the contract;
2. Any day the Contractor is unable to perform work on a controlling operation for more than 3 consecutive hours beginning at the scheduled starting time, for reasons beyond the Contractor's control and not the Contractor's fault or responsibility, including work stoppages due to a labor dispute;
3. If work is performed on the controlling operation during the seasonal suspension, unless otherwise specified in the contract or in subsection 108.06.A.4;
4. When suspension of work on the controlling operation is required, through no fault of the Contractor, for reasons including but not limited to the following:
   a. Right-of-way or right-of-entry was not available when a controlling operation was required to start;

b. Delays resulting from utilities not moved out of the Contractor's work area; and
c. Work on an adjacent project prevented the Contractor from performing work.

108.07. Extension of Time on Work Day Contracts. If the contract time is specified in work days, the Engineer will grant extensions of time for the following excusable delays without liquidated damages for opening to traffic and completing within the contract time on the following basis:

A. If, on a controlling operation, there is an increase in the quantities set forth in the contract and this is not offset by decreases in similar pay items, the Engineer will base the extension of time on Formula 108-1, not to exceed the actual number of days required to perform the additional quantities of work.

$$Ew = \frac{Tw \times I}{Q}$$ Formula 108-1

Where:

Ew = Extension of time in work days;
Tw = Work days assigned to the pay item on the progress schedule;
I = Increased quantity of the pay item; and
Q = Contract quantity of the pay item.

B. If there is extra work that delays a controlling operation, as shown on the progress schedule, the extension of time will be the time the extra work delayed the controlling operation.

108.08. Extension of Time on Calendar Day or Calendar Date Contracts. If the contract time is specified in calendar days or by a calendar date, the Engineer will grant extensions of time without liquidated damages for the following excusable delays for opening to traffic and completing within the contract time on each of the following bases:

A. If the Department fails to award the contract within 28 calendar days after the Department receives all required documents specified in subsection 102.14 from the Bidder, the extension of time will be the duration of that delay.

B. If there are delays due to suspension of work ordered by the Engineer in accordance with subsection 103.02.D that affect the controlling operation or the suspension changes the controlling operation(s) required for completion of the contract, the extension of time will be the duration of the delay. The suspension must be for causes other than negligence, faulty work, failure or refusal of the Contractor to carry out the provisions of the contract or the orders of the Engineer.

C. If there are delays due to unforeseen causes beyond the control and without the fault or negligence of the Contractor, including but not limited to the following, the extension of time will be the duration of the delay to the controlling operation:

1. Acts of God;
2. Acts of the public enemy;
3. Acts of Government;
4. Acts of State or any political subdivision;
5. Fires, floods, and epidemics;
6. Labor disputes; or
7. Delayed delivery of the materials specified and approved for the project when the Contractor identifies, and the Department verifies that the delay is an industry-wide shortage of materials.

D. The Department will not consider weekends or Department-specified holidays as adverse weather days unless the Engineer directs the Contractor to work those days, or the Contractor‘s approved progress schedule or CPM, indicated that the Contractor intended to work on the controlling operation on those days.

1. For standard contracts, the contract completion date is based on a progress schedule using a 5 work day week. On standard contracts, work days are considered to be Monday through Friday. If, during a calendar month, the Contractor is prevented from working on the controlling operation, the Contractor may request an extension of time based on the difference between the actual work days lost that month compared to the normal work days lost per month. The Department will consider normal work days lost per month to be 4.5 workdays for May through October and 2.25 workdays for the partial months of April and November. The Department will convert work days to calendar days for contracts with completion dates prior to September 15 by multiplying by 1.75 and, for contracts with completion dates on or later than September 15, by multiplying by 2.0.

2. For expedited contracts, the contract completion date is based on a progress schedule using a 6 work day week. On expedited contracts, work days are considered to be Monday through Saturday. If, during a calendar month, the Contractor is prevented from working on the controlling operation, the Contractor may request an extension of time based on the difference between the actual work days lost that month compared to the normal work days lost per month. The Department will consider normal work days lost per month to be 4.5 work days for May through October and 2.25 work days for the partial months of April and November. The Department will convert the work days to calendar days for contracts with completion dates prior to September 15 by multiplying by 1.4 and, for contracts with completion dates on or later than September 15, by multiplying by 1.75.

3. For any project that specifies limited work days per month to be less than or equal to 72 hours per week, additional time will be provided on a day for day basis when the Contractor is not able to work on the controlling operation due to weather.

The Department will not consider any days during seasonal suspension unless the Engineer directs the Contractor to work those days, or the Contractor‘s approved progress schedule

indicated that the Contractor intended to work on the controlling operation on those days. The extension of time granted will be the duration of the delay to the controlling operation.

E. If, on a controlling operation, there is an increase in the quantities set forth in the contract that is not offset by decreases in similar controlling items of work, the Engineer will base the extension of time on Formula 108-2, not to exceed the actual number of days required to perform the additional quantities of work.

$$Ec = \frac{Tc \times I}{Q}$$ Formula 108-2

Where:

Ec = Extension of time in calendar days;
Tc = Contract time assigned to the pay item on the progress schedule;
I = Increased quantity of the pay item; and
Q = Contract quantity of the pay item.

F. If there is extra work that delays a controlling operation, as shown on the progress schedule, the time extension will be the time the extra work delayed the controlling operation.

G. The Contractor may propose, and the Engineer may approve another equitable method, supported by an acceptable rationale, to determine extensions of time for any of the excusable delays listed in subsection 108.08.

108.09. Request For Extensions of Time

A. **General.** The Contractor must submit written requests for extensions of time to the Engineer. The request must state the reasons for the extension of time. In case of delays due to unusual weather, the Contractor must submit requests for extension of time within 14 days after the last day of the calendar month in which the delay occurred. The Contractor must submit requests for extensions of time for all other delays within 14 days after the last day of the delay. Failure to submit written requests to the Engineer within the required timeframe will constitute a waiver of claim for an extension of time. The Engineer will respond with a written decision within 14 days of receipt of the request for the extension of time.

The Engineer may grant extensions of time, either with or without liquidated damages. An extension of time to a contract date subject to liquidated damages will apply equally to all contract dates subject to liquidated damages that are impacted by the extension of time. The Engineer will record the number of work days or calendar days granted for each extension of time. Any contract dates extended will thereafter be binding upon the Contractor and Surety as if they appeared in the contract originally.

If the Contractor disagrees with the Engineer's denial of a request for an extension of time for any reason not specifically covered elsewhere in the contract, the Contractor must notify the Engineer

in writing within 7 days after receipt of the Engineer's denial and must proceed in accordance with subsection 104.10.

If the Engineer allows the Contractor or the Surety to continue and complete all or any part of the work after the original or extended contract time, the Department will not have waived any rights under the contract.

B. **Compensable Delays.** Compensable delays are delays that are caused by the Department and could not have been reasonably foreseen or anticipated by the Contractor. The Contractor will be entitled to compensation for the delay computed in accordance with 109.05.E only if the delay is caused by one or more of the following:

1. Contract revisions as defined in subsections 103.02.B, 103.02.C, 103.02.E, or 103.02.F;
2. Utility or railroad interference within the project limits;
3. An Engineer-ordered suspension as defined in subsection 103.02.D; or
4. The actions or neglect of the Department or its failure to act in a timely manner, including, but not limited to, unavailable right-of-way or right-of-entry, incomplete adjacent projects, and lack of Department-obtained permits.

C. **Non-Excusable Delays.** Non-excusable delays are delays that are the Contractor's fault or responsibility. All non-excusable delays are non-compensable.

108.10. Liquidated Damages. If the contract requires the Contractor to maintain through-traffic while the Contractor is performing the work or if the contract does not contain a time requirement for opening to traffic, the provisions herein will apply to the contract time only.

The Department will not assess simultaneous liquidated damages for failure to open to traffic on time and for failure to complete within the contract time.

A. **Failure to Open To Traffic Within the Contract Time.** Unless the contract requires otherwise, the Department will assess liquidated damages for each calendar day that the project or portion of the project remains unopened to traffic, including time within the seasonal suspension. For seasonal suspension, the Engineer will not designate the project as open to traffic until the project is in an acceptable condition for travel and winter maintenance, including necessary traffic control devices and erosion control measures.

Unless the contract requires otherwise, when the Department has determined that the project or a portion of the project is open to traffic in accordance with subsection 107.21, the Department will discontinue the assessment of liquidated damages for failure to open to traffic.

B. **Failure to Complete Within the Contract Time.** The Contractor must complete the contract on or before the date the contract time expires. The Department will assess liquidated damages for each calendar day that the work remains incomplete. For periods of seasonal suspension,

the Department will not assess liquidated damages, except as provided in subsection 108.10.A, or as otherwise required by the contract.

C. **Assessment of Liquidated Damages.** Sums assessed as liquidated damages are not penalties, but are fixed and agreed upon liquidated damages due to the Department from the Contractor. The liquidated damages may contain one or more components of damages added together.

1. **Liquidated Damages for Department Oversight Costs.** This component of liquidated damages represents the Department's added cost of engineering and supervision due to the Contractor's failure to open to traffic or complete the work within the contract time. The amount of these liquidated damages will be based on Table 108-1.

Table 108-1 Schedule of Liquidated Damages for Department Oversight		
Original Contract Amount		**Amount per Calendar Day, $**
From more than, $	To and including, $	
0	100,000	500
100,000	500,000	800
500,000	1,000,000	1000
1,000,000	5,000,000	1,500
5,000,000	15,000,000	2,000
Over 15,000,000		4,000

2. **Liquidated Damages for Other Department Costs.** This component of liquidated damages represents the inconvenience to the public, maintenance of detours, and other items that have caused an expenditure of public funds due to the Contractor's failure to open to traffic or complete the work within the contract time. The contract will specify the amount of these liquidated damages.

108.11. Default of Contract.

A. **Notice of Default.** If the Contractor is responsible for any of the following, the Engineer will give the Contractor and Surety written notice of default and the action required to be taken by the Contractor and Surety:

1. Failing to prosecute the work with the labor, equipment, or materials sufficient to complete the work within the contract time and according to the progress schedule;
2. Performing the work improperly;
3. Neglecting or refusing to remove material or to reconstruct work that has been rejected as defective and unsuitable; or
4. Failing to perform the work as required by the contract for any other reason.

B. **Termination for Default.** If any of the following occurs, the Department will have full power and authority to terminate the contract for cause and take over the uncompleted work from the Contractor and Surety, including appropriation and use of any materials on the project. The Department may demand performance of the Surety enter into a completion contract, or undertake any other method that the Department determines may be necessary to complete the work:

1. The Contractor or Surety, within a period of 10 days after the notice of default, does not proceed satisfactorily;
2. The Contractor commits any act of bankruptcy, becomes insolvent, or is declared bankrupt;
3. The Contractor allows a final judgment against the Contractor to remain unsatisfied for 5 days;
4. The Contractor makes an assignment for the benefit of the Contractor's creditors; or
5. The Contractor files proceedings for reorganization in accordance with the Bankruptcy Act, or such proceedings are filed against the Contractor.

If the Department terminates the contract for cause, the Department will deduct all additional costs and damages, and the costs and charges of completing the work, from monies due or to become due the Contractor. If the total of the damages, costs, and charges exceeds the balance of the contract amount that would have been payable to the Contractor had the Contractor completed the work, the Contractor and Surety must pay the amount of the overage to the Department upon request.

108.12. Termination of Contract. If the Department determines that termination is in the Department's best interest, the Department may terminate the contract or any portion of the contract. If the Department orders termination of a contract effective on a certain date, the Department will pay the Contractor for completed or partially completed work as of that date at the contract unit prices or on a force account basis, as determined by the Engineer. If the Department terminates a portion of the contract, the Department may stop delivery and payment for materials made unnecessary. The Department will pay for pay items eliminated in their entirety by the termination in accordance with subsection 103.02.F.

The Department may choose to purchase from the Contractor acceptable materials obtained for the work but not used at actual cost delivered to a prescribed location plus 15 percent, or otherwise disposed of as mutually agreed.

The Contractor must submit any claim for additional compensation not covered in the contract within 60 days after the effective termination date, or as otherwise authorized by the Department. The Contractor must make records available to support the validity and amount of compensation sought. The Contractor is not entitled to loss of anticipated profits due to the Department's termination of the contract or any portion of the contract.

The Department's decision to terminate the contract or a portion of the contract will neither relieve the Contractor of its contractual responsibilities for the completed work, nor will it relieve the Surety of its obligation for any just claim arising out of the work performed.

A. **Immediate Obligations.** The Engineer will deliver a Notice of Termination to the Contractor that specifies the extent of termination and the effective date. After receipt of a Notice of Termination, the Contractor must immediately proceed with the following obligations:

1. Stop work as specified in the notice;
2. Place no further subcontracts or orders for materials, services, or facilities, except as necessary to complete the remaining portion of the contract;
3. Terminate all subcontracts to the extent they relate to the work terminated;
4. Transfer title and deliver to the Department the following:
   a. Fabricated, partially fabricated, or unfabricated parts, all work in progress, completed work, supplies and other material produced or acquired for the terminated work; and
   b. Completed or partially completed plans, drawings, information, and other property that, if the contract had been completed, the Contractor would have been required to provide to the Department;

5. Complete the performance of the non-terminated work;
6. With the Engineer, on a date identified by the Engineer, take inventory of acceptable materials obtained for the contract that has not been incorporated into the work; and
7. Take any action necessary, or directed by the Engineer, for the protection and preservation of the property related to the contract that is in the possession of the Contractor and in which the Department has or may acquire an interest.

Section 109. MEASUREMENT AND PAYMENT

109.01. Measurement of Quantities. The Engineer will determine quantities of materials furnished and of work performed under the contract by methods of measurement and computations that are generally recognized as conforming to good engineering practice. The Engineer will measure quantities of work completed under the contract according to United States standard measures.

Unless otherwise required in the contract, manufacturing tolerances established by the industries involved will be accepted.

When required by the Engineer, the Contractor must provide copies of paid freight bills, trucking slips, bills of lading, and paid invoices for any material used in the work. The Contractor and the Engineer will routinely review quantities during the life of the contract.

A. **Payments Based on Plan Quantities.** If the contract requires, payment of an item or part of an item on a plan quantity basis, the payments will be those quantities shown on the plans.

For earthwork, the basis for changes in quantities will include any demonstrated errors discovered in plan quantities.

If a Contractor believes a plan quantity basis is inaccurate, the Contractor may request, in writing, that the Department check the identified quantity. The request must be accompanied by the Contractor's calculations, drawings, or other evidence indicating why the plan quantity is believed to be in error. If the plan quantity is in error, the Department will pay according to the corrected plan quantity, except as otherwise provided in subsection 103.02.

If the Department believes that a plan quantity is inaccurate, the Department will check the identified quantity. If the plan quantity is in error, the Department will pay according to the corrected plan quantity. If during construction, the Department finds that conditions have changed from those anticipated in design to the extent that actual measurement of a plan quantity item is warranted, the Department will measure the quantity and will base payment on the measured quantity.

B. **Payments Based on Actual Quantities.** Unless specified otherwise, the basis of payment for a pay item will be the actual quantity. The Engineer will measure and calculate the actual quantity of work performed, using quantities from measurements taken from the completed in-place work in accordance with the "Measurement and Payment" subsection for the relevant pay item and the following:

1. **Linear and Area Measurements.** When the method of measurement specifies measurements in stations, miles or acres, the measurements will be horizontal measurements, unless specified otherwise.

When the method of measurement for a particular item specifies that it will be measured in place, linear or area measurements will be taken at the surface of the completed item, parallel to the base.

2. **Volume and Weight Measurements.** All pay items specified to be measured as compacted-in-place (CIP) will be measured in the field according to the subsection that applies to that material.

   All materials specified to be measured by the cubic yard, loose measure (LM) will be measured in the hauling vehicle at the point of delivery, unless specified otherwise. The Engineer's approval is required for all vehicles used for this purpose. The shape of the hauling unit must be such that the volume of the unit may be readily and accurately determined.

   a. **Aggregates.** The Engineer will make moisture determinations on aggregates on the dry basis using Formula 109-1.

   $$Z = \frac{(X-Y)\times 100}{Y}$$ Formula 109-1

   Where:

   X = Wet weight;
   Y = Dry weight; and
   Z = Percent moisture.

   Measurement of pay quantities of aggregates on a ton basis where a maximum specified amount of moisture is allowed will be calculated as follows:

   i. Where the actual moisture, including liquid admixtures, present at time of weighing does not exceed the maximum moisture content permitted, the actual scale weights will be used as pay quantities.
   ii. Where the actual moisture present at time of weighing is more than the maximum moisture content permitted, the pay quantities will be calculated using Formula 109-2.

   $$A = B\frac{100+C}{100+D}$$ Formula 109-2

   Where:

   A = Pay quantity of aggregate (tons);
   B = Weight of wet aggregate (tons);
   C = Allowable moisture (percent); and
   D = Actual moisture (percent).

3. **Measuring Wire and Steel Sheets and Plates.** The size of wire for electrical conductors will be measured according to ASTM B258.

   When the term gage refers to the measurement of steel wire, it will mean the wire gage specified in ASTM A510/A510M.

   The term gage, when used concerning the measurement of steel sheets and light plates, will mean the gage referenced in ASTM A568/A568M for uncoated sheet and in ASTM A653/A653M for a galvanized sheet.

4. **Measuring Depth of Reinforcement and Thickness of Concrete Pavement and Concrete Base Course.** The Engineer will core concrete pavements and concrete base courses before final acceptance to determine thickness of concrete pavement and, if required, the depth of reinforcement below the pavement surface in accordance with subsection 602.04.

5. **Measuring Thickness of Miscellaneous Concrete Construction.** The Engineer may core concrete construction when evidence shows nonconformance with the contract. The Engineer may core concrete construction on any portion or all of the work involved. Acceptance will be according to subsection 104.04.

6. **Measuring Weight on Scales.** Platform, belt conveyor, surge bin, and weigh batch scales, and associated weights, must conform to the requirements of the Weights and Measures Act, MCL 290.601, et seq., and the requirements of the NIST Handbook 44, *Specifications, Tolerances and Other Technical Requirements for Weighing and Measuring Devices*.

   Unless specified otherwise, enlist the services of a Michigan Registered Service Agency to certify the calibration and working order of the weighing system annually and whenever maintenance or repairs require restoring calibration.

   A computer-generated printout system is required on platform, surge bin, and weigh batch scales. For concrete plant weigh batch scale systems, the ticketing system must conform to subsection 1001.03.A.4. For platform and surge bin scale systems, the ticketing system must print and identify all of the following information on a triplicate ticket for each truckload:

   a. Project number;
   b. Contractor's name;
   c. Type of material being weighed;
   d. Time;
   e. Date;
   f. Sequential, non-duplicate, ticket number (may be preprinted on a ticket);
   g. Gross weight;
   h. Tare weight;
   i. Net weight; and
   j. Net accumulated jobs daily total.

The information must be labeled so that each ticket can be readily understood. The system must be interlocked to allow printing only when the scale has come to a complete rest.

109.02. Scope of Payment. The Department will pay the Contractor for accepted quantities of contract pay items at the contract unit prices, as required by the contract, except as otherwise specified in subsection 103.02.

The Contractor must agree to accept this compensation as full payment for the following:

A. Performing the work; and
B. Compensation for loss or damage arising from the nature of the work or from the action of the elements (except as specified in subsection 107.11), or from any unforeseen difficulties that may be encountered during the prosecution of the work.

109.03. Payments for Increased or Decreased Quantities. Whenever the quantity of any item of work as given in the contract is increased or decreased, payment for the item of work will be based on the quantity completed. The payment will be authorized at the unit price for the item named in the contract, except as otherwise provided in subsection 103.02.

109.04. Progress and Partial Payments. The Engineer will make progress payments for units of work completed and partial payments for delivered and stockpile materials. Payments will be made in a timely manner; however, no claim will be considered for delayed payment.

Progress payments do not constitute partial or full acceptance of the work. Acceptance of the work is specified in section 109.07.

A. **Completed Work.** The Engineer will make progress payments based upon estimates prepared by the Engineer of the work completed. The estimates are subject to final payment in accordance with section 109.07. Progress payments will be made biweekly if all of the following occur:

1. The work is progressing according to the progress or critical path method schedule; and
2. The written directives of the Engineer and contract requirements are being fulfilled.

The final payment will be made according to the requirements specified under subsection 109.07.D.

B. **Delivered and Stockpiled Materials.** The Engineer may pay the cost of nonperishable materials that meet the contract requirements and are produced, fabricated, or purchased for incorporation into the contract, including freight charges, when all of the following conditions are met:

1. The value of the delivered material to be used in one item of work, exceeds $3,000 and is not scheduled to be incorporated into the work within 30 days after delivery;
2. The Contractor presents a copy of proof of payment authenticated by the supplier or a copy of the supplier invoice related to the stockpiled material to the Engineer. If a copy of the supplier invoice is provided, the Contractor must furnish the paid invoice within 10 days after receiving payment from the Engineer. However, if the prime Contractor is the supplier, producer, or fabricator, the Engineer will base the payment on proven production cost; and
3. The Contractor stores or stockpiles the materials, in accordance with contract requirements or manufacturer's recommendations, on the project, at locations near the project or at the fabrication facility, as approved by the Engineer.

For materials stockpiled at locations not on the project or at locations near the project, the materials must have been approved by the Department for shipment or for use. Fabricated materials required to be accepted by the Department based on "Fabrication Inspection" will still be accepted based on the two-part acceptance process shown in the MQAP Manual. Stockpiled material payment for fabricated items will be made in accordance with the Department's procedures

The Engineer will base the payment for delivered or stockpiled materials on amounts paid to, or invoiced by the supplier for the materials. However, the Engineer will withhold a portion of the contract unit price to cover completion of the work related to the pay item. The Engineer will not make payment for materials in excess of contract quantities. When the Engineer makes partial payment for materials, the Contractor must reserve the materials for use on the project. The Contractor is responsible for any loss or damage to the materials until the materials are incorporated in the work and the work is accepted.

The Contractor assumes the cost of any additional testing required by partial payment for stockpiling.

The Engineer's approval of partial payment for delivered or stockpiled materials will not constitute final acceptance of such materials for use in completing items of work.

When the Contractor provides receipted bills, paid invoices, or other satisfactory evidence of payment by the fabricator for structural steel raw material that is to be a part of the completed structure and that has been produced by the steel mill and delivered to the fabricator, the Engineer will include the value of the steel in the progress estimate. Detailed descriptions of the delivered material, including weights, dimensions, heat and unit numbers, and chemical and physical test reports, must be shown on the invoice or supplied to the Engineer. The fabricator must store the material separately and use the material only for fabricating the structural steel for the contract.

The Contractor must present evidence that the producer, fabricator, or supplier of the material is fully aware of all details of the transaction.

The Contractor must immediately pay the fabricator for those materials upon receipt of payment by the Department.

If the fabricator notifies the Department that payment for materials paid for by the Department has not been received, and the fabricator's claim remains unsatisfied for more than 10 days following the Department's payment to the Contractor, the amount provided for payment to the fabricator will be deducted from the next progress estimate.

109.05. Payment for Contract Revisions.

A. **General.** The Department will pay for contract revisions, excluding those resulting from increased or decreased quantities of pay items covered by subsection 109.03, using the sequence specified in subsection 109.05.B through subsection 109.05.F. This payment covers all costs for performing the revised work, delay costs, and all other associated costs the Engineer deems reasonable and not expressly precluded in subsection 109.05.G. The Department may direct the Contractor, at anytime, to perform the revised work under force account.

If a contract revision includes an extension of time for compensable delays under subsections 108.09.B.1 through 108.09.B.4 the Department will pay for delay costs in accordance with subsection 109.05.E

If a contract revision includes direction to the Contractor to accelerate the work in accordance with subsection 104.01.C, the Department will pay for the directed acceleration in accordance with subsection 109.05.F.

B. **Contract Unit Prices.** The Engineer will attempt to price revised work using contract unit prices.

C. **Negotiated Prices.** The Engineer and the Contractor will negotiate the price of a contract revision if the Engineer and the Contractor cannot agree on a price using contract unit prices.

The Contractor must provide an estimate of the proposed unit prices or lump sum price for the contract revision that includes the cost of performing the revised work, delay costs, all other associated costs, plus a reasonable allowance for profit and applicable overhead. The Engineer may request that the Contractor justify the estimate by providing one or more of the following used in deriving the estimate:

1. Contractor's labor requirements, by trade, in hours for each task;
2. Contractor's equipment costs and time requirements;
3. Material costs; and
4. Any specialty subcontractor costs.

The Contractor must provide the justification within 5 calendar days after the Department's request. The Department will respond to the estimate within 5 calendar days after receipt of the

Contractor's justification. The Department and the Contractor can mutually agree to extend these 5-day requirements.

D. **Force Account.**

1. **General.** If the parties are unable to reach agreement using contract unit prices or negotiated prices, the Engineer may direct the Contractor to perform the revised work, including any required offsite work, under force account.

   The Department will pay the Contractor for the directed work as specified in this subsection. The Contractor must accept the compensation provided in this subsection as full payment for the directed work.

   At the end of each work day, the Contractor's representative and the Engineer will compare records of the work done under force account.

   At any point during the execution of a force account, both parties may mutually agree to return to payment for the revised work in accordance with sections 109.05.B or 109.05.C.

2. **Work Plan.** Before starting the force account work, the Contractor must submit a written proposal for the directed work, including the planned equipment, materials, labor, and schedule. The work plan must include, to the extent possible, a progress schedule of controlling items and their duration, equipment to be used (Contractor owned and rented), labor to be used (number of people and crafts), and a listing of material. The Engineer will review and approve the plan. From the work plan, the Engineer will prepare a budget recommendation for the force account work. If the conditions relative to the force account change or if the progress of the work becomes inconsistent with the original work plan, the Contractor and the Engineer will jointly revise the work plan.

3. **Labor.** The Engineer will pay the Contractor an amount equal to the sum of the following labor costs, plus 55 percent of the sum (for road work) or 60 percent of the sum (for bridge work) to cover the costs of home office overhead, bond premium, insurance, payroll taxes and to provide for a reasonable profit.

   For foreman and laborers, the Contractor will receive the rate of wage (or scale) that was agreed to in writing before beginning work. This rate will be paid for the time that the foreman and laborers are engaged in the work. This will include hours required by a collective bargaining agreement or other employment contract applicable to the class of labor employed on the work, exclusive of time included in the “estimated operating costs.”

   The Contractor will receive the amount paid to, or on behalf of, workers for vacation benefits, health and welfare benefits, pension fund benefits, or other benefits when the amounts are required by a collective bargaining agreement or other employment contract generally applicable to the classes of labor employed on the work.

For the superintendent, the amount the Contractor will receive will be limited to the work hours in which the superintendent is engaged in the performance of the work done under force account.

4. **Materials.** For materials used and accepted by the Engineer, the Contractor will receive the cost of materials delivered, including tax and transportation charges, plus 15 percent.

   If a change in the amount, or a change in the type of force account work, results in a surplus of the material ordered and delivered to the project site, the Department will reimburse the Contractor for the costs, including restocking charges, incurred in returning the surplus material to the supplier.

   Discount for prompt payment or penalty for late payment will not be considered in determining the cost of materials charged to the force account work.

5. **Equipment and Plant.** The Contractor will be paid according to the following for any equipment or special equipment, other than small hand or power tools, the use of which is approved by the Engineer. Exclusive of costs for the operator, the Department calculates the base hourly rate for a piece of equipment by adding two distinct components - a rental rate and an operating rate. The Department defines each of these terms as follows:

   Rental Rate. Includes depreciation, taxes, major overhaul and repairs, overhead, interest, regional adjustment, equipment age adjustment, insurance, and storage.

   Operating Rate. Includes fuel, lubricants, labor service and maintenance, field repairs, tires, and other expendable items needed for continuous and efficient operation.

   Base Hourly Rate. The sum of a piece of equipment's rental and operating rates.

   The cost of supplies, attachments not listed separately in the *Rental Rate Blue Book for Construction Equipment*, Volume 1, 2, or 3, by Equipment Watch, Inc. (Blue Book), field and home office overhead, profit and incidentals, insurance covering the usual insurable risks, including fire and theft are incidental to the base hourly rate. The Department will not be liable for losses that can be covered by insurance.

   Upon request, the Contractor must furnish to the Engineer either original bills and invoices or certification documenting the equipment's original invoice price plus improvements. Payment for equipment will not exceed the equipment's original invoice cost plus any documented improvements. Cumulative payment for multiple force accounts for any piece of equipment on a single contract will not exceed the equipment's original invoice cost plus any documented improvements.

Time elapsed while equipment is broken down and being repaired will not be considered for payment. Time elapsed after the Engineer has advised the Contractor in writing that the equipment is no longer needed to complete the force account work will not be considered for payment except for transportation costs.

a. **Contractor-Owned Equipment.** This subsection applies to the equipment and plant owned directly by the Contractor or by entities that are divisions, affiliates, subsidiaries, or in any other way related to the Contractor or parent company.

   i. **Equipment Listed in Blue Book.** The published monthly rental rate for each piece of Contractor-owned equipment used, including appurtenances and attachments to equipment, will be determined by using the Blue Book. The edition that is current at the time the force account work is started will apply. The rental rate will be equal to the published monthly rental rate divided by 176, modified by the rate adjustment factor and the applicable map adjustment factor. The operating rate will be equal to the published estimated operating costs per hour.

   ii. **Equipment Not Listed in Blue Book.** The monthly rental rate will be determined by using the published monthly rental rate listed for a similar piece of equipment giving proper consideration to the capacity, size, horsepower, and age of the equipment. The rental rate will then be determined by dividing the published monthly rental rate by 176, modified by the rate adjustment factor and the applicable map adjustment factor. The operating rate will be equal to the published estimated operating costs per hour. Rates must be agreed upon in writing before the equipment is used.

   For equipment for which there is no comparable in the Blue Book, the Contractor will provide the monthly rental rate and operating rate and furnish cost data to support these rates. The monthly rental rate must be reasonable but not more than 5 percent of the invoiced cost of the equipment. The rental rate will be determined by dividing the monthly rental rate by 176. Rates must be agreed upon in writing before the equipment is used.

   iii. **Small Tools.** No payment will be allowed for small hand and power tools that are not listed in the Blue Book. Small hand and power tools listed in the Blue Book at a rate of less than $1.00 per hour will not be paid for separately.

   iv. **Foreman's Transportation.** The rate for the foreman's transportation unit will be $25.00 per hour.

   v. **Minimum Equipment Time.** The minimum time per day for equipment used productively in force account work will be two hours.

   vi. **Equipment Transportation.** Travel time to the location of the force account work will be included when the equipment is moved under its own power. When equipment is

moved from one site to another by means other than its own power, the actual operating time during periods of loading and unloading equipment will be paid for at the established base hourly rate and transportation costs will be allowed.

Transportation charges for each piece of equipment to and from the work site will be paid provided:

- Equipment is obtained from the nearest available source;
- Return charges do not exceed the delivery charges; and
- Charges are restricted to those units of equipment not already available and not on or near the project.

b. **Non-Contractor-Owned Equipment.** If the Contractor is required to rent a specific type of equipment, the Contractor must inform the Engineer of the need to rent the equipment and provide a written estimate from the rental agency for that equipment before using it on the work site. The Contractor will be paid the actual rental cost plus the operating rate for the time that the equipment is used to accomplish the work, plus the cost of moving the equipment onto and away from the job. The Contractor must provide a copy of invoices for all rental expenses incurred.

c. **Standby Rate and Allowable Hours.** For Contractor-owned equipment, the standby rate will be one-half the rental rate established in subsection 109.05.D.5.a. The standby rate will only be allowed if the Engineer specifically requires the equipment to remain on the site for later use on the force account work.

The Engineer will provide written notice when the equipment is no longer needed to complete the force account work and will not be considered for payment, except for transportation costs.

Payments for standby time will not be made on any day the equipment operates for eight or more hours. For equipment accumulating less than eight hours operating time on any normal work day, standby payment will be limited to only that number of hours that, when added to the operating time for that day, equals eight hours.

6. **Subcontracting or Hiring Services by Others.** For administration costs in connection with subcontracting work or hiring services by others to perform specialized work that the Contractor is not qualified to do, the Contractor will receive an amount equal to five percent of the total cost of the work, computed as set forth above. Prior approval by the Engineer is required.

7. **Miscellaneous.** No additional allowance will be made for general superintendence or other costs for which no specific allowance is provided.

8. **Coordination of Records.** The Contractor's representative and the Engineer will compare records for work completed on a force account basis and bring these records into agreement at least once a week.

9. **Statements.** The Contractor will furnish the Engineer an itemized statement of the cost for the work performed on a force account basis including the percentage(s) added to labor, materials and subcontracts. The Contractor must use a standard MDOT form or approved equal that includes the following details for reporting all force account costs.

   a. **For Each Employee.** Name, classification, dates worked, time worked each day, total time worked on the force account activity, hourly rate of pay, total wages and fringe benefits, and total earnings to date.

   b. **For Each Unit of Equipment Used.** Description, dates used, number of hours operated each day, standby hours, total hours, rental and operating rates, and total cost.

   c. **For Materials Used.** Total quantities of materials used and material costs, including transportation. Statements must be supported by invoices for all materials used and transportation charges.

      If materials used on the force account work are not specifically purchased for the work but are taken from the Contractor's stock, the Contractor must give the Engineer an affidavit certifying the following:

      i. The materials were taken from stock;
      ii. The quantity claimed was used; and
      iii. The costs including transportation represent the actual Contractor's cost.

E. **Delay Costs.**

1. **General.** If the Contractor incurs a delay attributable to the Department, the Department will pay for the costs specified in this section as allowed by subsection 108.09.B, unless these costs have been previously paid as allowed in subsection 109.05.D. Such payment constitutes full compensation for the delay costs.

   The Department will make no payment for delays occurring during seasonal suspension unless the Contractor's approved progress schedule depicts work on the controlling operation during this period or the Engineer directs the Contractor to work during seasonal suspension.

   The Department will not pay for delay costs until the Contractor submits an itemized statement of those costs. Provide the content specified in subsection 109.05.D.9 for the applicable items in this statement and as follows:

   a. Proof of cost of project staff salaries, wages, payroll taxes and insurance;

b. Proof of cost of Field Office Overhead;
c. Proof of escalated cost for labor, equipment, and material; and
d. Proof of material storage costs.

2. **Allowable Delay Costs.** Increases in cost for labor, equipment, and materials will be calculated as follows:

   a. **Idle Labor.** Labor costs during delays must be calculated as specified in subsection 109.05.D.3 for all non-salaried personnel remaining on the project as required under collective bargaining agreements or for other Engineer-approved reasons.

   b. **Escalated Labor.** Payments authorized for increases in labor costs will be based on the difference between old and new labor rates established by a State or Federal agency or an agreement between the employee's and the Contractor's bargaining agency which is accepted by the Department. Payment will be based on certified payrolls. Payment will also include the increases in fringe benefit rates and increases in payroll taxes that the Contractor is required to pay.

   c. **Idle Equipment.** Payment maybe allowed on a rental basis for the idled equipment if any one of the following criteria is met:

      i. The equipment is on the project site at the time of the delay, is required for the controlling operation, and cannot be used at other locations on the project.
      ii. The equipment is specialized and directly related to the controlling operation, whether on or off the project site. This must be certified by the Contractor and verified by the Engineer.

      The rental rate for idled leased or rented equipment will be the leased or rented rate. However, the Engineer may direct the Contractor to return equipment and take it off rental.

      The rental rate for idled Contractor-owned equipment will be one-half the rate established in subsection 109.05.D.5.a. No payment will be allowed for operating costs.

      Payment will be limited to the difference between the hours used and 8 hours in any one day and to the difference between the hours used and 40 hours in any one week. No additional compensation for overhead will be allowed.

      Equipment demobilization and remobilization, if directed by the Engineer, will be paid in accordance with subsection 109.05.

   d. **Material Escalation or Material Storage.** Payment for increased cost of materials will be based on differences in the invoice costs before and after the delay period. When requesting an increase in cost of materials, the Contractor must document the increased

costs due to the delay. The cost of materials storage during the delay will be the invoiced storage cost.

e. **Field Office Overhead.** Payment for field office overhead costs include field office rent, office utilities, land rent, and office supplies. Compute these costs on a calendar day basis using actual costs incurred due to the delay.

F. **Directed Acceleration.** If the Engineer orders the Contractor to accelerate the Work in accordance with subsection 104.01.C, prior to accelerating the work, the Engineer and the Contractor will negotiate compensation to the Contractor for the costs to accelerate the work.

G. **Unrecoverable Costs.** The Contractor is not entitled to compensation for costs not specifically allowed or provided for in this subsection including, but not limited to, the following:

1. Loss of anticipated profit.
2. Consequential damages, including loss of bonding capacity, loss of bidding opportunities, insolvency, and the effects of force account work on other contracts, or business interruption.
3. Indirect costs.
4. Attorney's fees, claim preparation expenses, and the costs of litigation.
5. Unabsorbed or extended field or home office overhead or any damages using an Eichleay or similar equation, except as otherwise provided in the mark ups specified in subsections 109.05.D.1 through 109.05.D.7.

109.06. Source of Supply and Carrier Rates on Materials. The following do not constitute cause for claim for extra compensation:

A. The inability to secure satisfactory materials, for reasons beyond the Contractor's control, from the source upon which the bid was based, unless contract specific single source suppliers are specified by the Department; or
B. Changes in carrier rates or the alteration of transportation facilities for these materials during the life of the contract.

109.07. Final Inspection, Acceptance, and Final Payment.

A. **Partial Acceptance.** Upon completion of a portion of the work, the Contractor may request, in writing, partial acceptance of that portion of the work. Within 7 days of the Contractor's written request, the Engineer will conduct an inspection to determine if the Contractor has satisfactorily completed that portion of the work in accordance with the contract. Within 7 days of the inspection, the Engineer will provide written notice of either partial acceptance for that portion of the work and the effective date, or an explanation for rejecting the Contractor's request for partial acceptance.

Partial acceptance will relieve the Contractor of maintenance responsibility and third party damage liability for the designated portion of the work. By relieving the Contractor of maintenance

and third party damage claims, the Department does not relieve the Contractor of responsibility for defective work or damages caused by the Contractor's operations. The Contractor must not construe partial acceptance to be final inspection, final acceptance of any part of the work, or waiver of any legal rights specified under section 107.

B. **Delayed Acceptance.** Upon completion of contract work items designated for delayed acceptance, the Contractor must notify the Engineer, in writing, of the completion of the designated work. Within 7 days of the Contractor's written request, the Engineer will conduct an inspection to determine if the Contractor has satisfactorily completed the designated portion of the work in accordance with the contract. Within 7 days of the inspection, the Engineer will notify the Contractor, in writing, of the date the delayed acceptance period begins.

Delayed acceptance will relieve the Contractor of maintenance responsibility and third party damage liability for the designated portion of the work. By relieving the Contractor of maintenance and third party damage claims, the Department does not relieve the Contractor of responsibility for defective work or damages caused by the Contractor's operations. The Contractor must not construe delayed acceptance to be final inspection, final acceptance of any part of the work, or waiver of any legal rights specified under section 107.

C. **Final Inspection and Final Acceptance.**

1. **Final Inspection.** The Engineer will conduct the final inspection within 7 days of receiving the Contractor's written notification that the work is completed. The Contractor must attend the final inspection.

   Within 7 days of the final inspection, the Engineer will provide written notice to the Contractor of a satisfactory final inspection or will provide a list of specific defects to be remedied in order to achieve a satisfactory final inspection.

   After achieving satisfactory final inspection, the Contractor is relieved of the duty of maintaining and protecting the project. In addition, the Contractor is relieved of its responsibility for third party damage claims, and for damage to the work that may occur after satisfactory final inspection.

2. **Final Acceptance.** Within 7 days of satisfactory final inspection and submission of all required contract documentation by the Contractor, the Engineer will give the Contractor written notification of final acceptance effective on the date the Department executes Form 1120, *Final Inspection/ Acceptance and Certification Report*.

   The Contractor, without prejudice to the terms of the contract, is liable to the Department at any time, both before and after final acceptance, for latent defects, fraud, such gross mistakes as may amount to fraud, or actions affecting the Department's rights under any warranty or guarantee.

D. **Final Payment.** Within 30 calendar days after final acceptance, the Engineer will prepare a final estimate of work performed. The Contractor will have 30 calendar days of issuance of the final estimate to file a claim or objections to the quantities within the final estimate. If no claim or objections are filed within 30 calendar days, the Department will process the final estimate for approval and final payment. At that time, the Contractor will be furnished a copy of the approved final estimate.

1. The final payment will be made when the Contractor has provided the following:
   a. All reports or documents required by the Department and the Federal Highway Administration;
   b. The consent of the Surety for payment of the final estimate; and
   c. Satisfactory evidence by affidavit, or other means, that all the indebtedness due to the contract has been fully paid or satisfactorily secured. If the evidence is not furnished, the Department may retain out of any amount due the Contractor sufficient sums to cover all lienable claims unpaid.
2. The Department can recover from the Contractor in the final estimate all overpayments. However, no recovery for overpayment will be made if both of the following conditions exist:
   a. The final estimate is issued more than 6 months after the acceptance of the project; and
   b. The overpayment was paid to a subcontractor not in existence at the time of the final estimate.

Section 110. MOBILIZATION

110.01. Description. This work consists of preparatory work and operations including, but not limited to, the following:

A. The movement of personnel, equipment, supplies, and incidentals to the project site;
B. The establishment of the Contractor's offices, buildings, and other facilities to support work on the project including associated job site posters;
C. Other work and operations the Contractor must perform;
D. Expenses incurred, before beginning work on pay items at the project site; and
E. Pre-construction costs, exclusive of bidding costs, that are necessary direct costs to the project rather than directly attributable to other pay items under the contract.

110.02. Materials. None specified.

110.03. Construction. All jobsite posters and employment notices required by state and federal regulations and the contract documents are to be posted in a conspicuous place. Posting of jobsite posters and employment notices (posted display, foreman vehicle binder, etc.) for short term or mobile operations will be as approved by the Engineer.

110.04. Measurement and Payment.

Pay Item	**Pay Unit**
Mobilization, Max (dollar)	Lump Sum

The Department will specify the maximum bid amount for **Mobilization, Max (dollar)** in the proposal. If the Contractor submits a bid amount for **Mobilization, Max (dollar)** that exceeds the maximum bid amount, the Department will use the maximum bid amount as the Contractor's lump sum bid amount and will correct the total bid amount to reflect this maximum bid amount.

The Department will pay the Contractor for **Mobilization, Max (dollar)** in accordance with Table 110-1. The percent of the original contract amount earned does not include the **Mobilization, Max (dollar)** pay item.

Table 110-1
Partial Payment Schedule for Mobilization

Percent of Original Contract Amount Earned	**Percent of Bid Amount for Mobilization, Max (dollar)**
5	50
10	75
25	100

The first scheduled payment for Mobilization, Max (dollar) will not occur until the Engineer has verified and documented the posting of required jobsite posters and employment notices.

When the percentage of the original contract amount earned is less than 5% on the partial payment schedule, the Department will pay the Contractor for costs of project specific bonding, insurances, and permits when proof of payment is received and accepted by the Engineer. The Engineer will then subtract these costs from the bid amount for **Mobilization, Max (dollar)**.

The total sum of all payments for this item will not exceed the bid amount for **Mobilization, Max (dollar)**, regardless of the following conditions:

A. The Contractor shut down the work on the project for any reason;
B. The Contractor moved equipment away from the project and then back again; or
C. The Department added additional quantities or items of work to the contract.

If the contract does not contain a **Mobilization, Max (dollar)** pay item, the unit prices for other items of work will include the costs of mobilization.

If at any time during the project, the Engineer documents that the required jobsite posters and employment notices are not posted appropriately, the Engineer will provide documented instructions to the Contractor that corrective action is required. Upon receipt of the notification of corrective action, the Contractor has 72 hours to correct the deficiency. If the issue cannot be corrected within the 72 hour time period, the Contractor will develop a documented implementation schedule for the corrective action and submit the schedule to the Engineer for approval within 72 hours of receiving the original documented notification. If the schedule is not approved, or if the schedule is approved, but is not followed, the following actions will occur:

A. The Engineer may stop work on the project until the Contractor completes corrective action; and
B. The Engineer will process a contract price adjustment in the amount of $1,000 per calendar day or portion thereof that the corrective action remains incomplete or the implementation schedule is not followed. The contract price adjustment will continue to be assessed until jobsite posters and employment notices are posted appropriately, the Engineer has been notified of the corrective action and the Engineer has verified the correction.

DIVISION 2 – EARTHWORK

Section	Title	Page No.
201	Clearing	XX
202	Removing Trees, Stumps, and Corduroy	XX
203	Removing Drainage Structures, Culverts, and Sewers	XX
204	Removing Miscellaneous Structures and Materials	XX
205	Roadway Earthwork	XX
206	Excavation and Backfill for Structures	XX
207	Obliterating Roadway	XX
208	Soil Erosion and Sedimentation Control	XX
209	Project Cleanup	XX

NOTES

Section 201. CLEARING

201.01. Description. This work consists of clearing, selectively thinning, clearing for fence, and applying growth preventive material if required.

201.02. Materials. Provide materials in accordance with the following:

Growth Preventative Material..... 917

MDARD must certify the applicator applying the growth preventive material. Provide certification to the Engineer prior to the application.

201.03. Construction.

A. **Clearing.** Cut, remove, and dispose of trees, stumps, brush, shrubs, roots, logs, and other vegetation. Salvage marketable timber. Preserve vegetation and objects required to remain from injury or defacement.

1. **Removals.** Remove trees, stumps and other vegetation to 10 feet outside the limits of earth disturbance or to the right-of-way line, whichever is less. In other areas, remove trees, stumps, and other vegetation as shown on the plans. Remove trees without endangering traffic and the general public, injuring other trees, and damaging structures or property.

   In peat treatment areas, remove trees, stumps, and other vegetation to the outer limits of the peat excavation. Between outer peat excavation limits and outer clearing limits, cut off vegetation to no greater than 6 inches above the ground. Removal of stumps and roots beyond the peat excavation limits is not required. If the Engineer approves, bury stumps with at least 2 feet of cover in peat disposal areas outside the limits of sound fill.

2. **Protecting Plant Life.** Protect vegetation that is not designated for removal on the plans or by the Engineer. Repair or replace trees or shrubs damaged by Contractor operations at no additional cost to the Department.

3. **Salvaging Marketable Timber.** Do not burn or waste marketable timber. Marketable timber includes trees, with a diameter of at least 6 inches as measured at a point 4½ feet above the base of the tree at the ground line. Timber does not need to be cut in lengths less than 8 feet.

   Salvage marketable timber in accordance with the following:

   a. **Right-of-Way Purchased in Fee Simple.** On right-of-way purchased in fee simple, the Department considers marketable timber the property of the Contractor. Make marketable timber available to wood-using industries or individuals.

b. **Right-of-Way Easements.** On right-of-way easements, the Department considers marketable timber the property of the landowner. Cut and neatly stack marketable timber outside the right-of-way on the adjacent property of the landowner.

Provide the Engineer with the property owner's written direction for the disposal of the marketable timber. Take ownership of marketable timber not wanted by the property owner and make available to wood-using industries or individuals.

On easements or special use permits on land owned by the USDA Forest Service or MDNR, marketable timber is the property of the Forest Service or MDNR. Cut and dispose of this timber as agreed by the Department and the Forest Service or MDNR. The Forest Service or MDNR may sell, or otherwise dispose of standing marketable timber to others if its removal does not unduly interfere with Contractor operations.

4. **Disposing of Unsalvageable Material.** Do not dispose of material, temporarily or permanently, in wetlands or flood plains. Dispose of unmarketable timber and vegetative debris resulting from clearing and selective thinning, in accordance with subsection 205.03.P, and by one of the following methods:

a. **Chipping.** Dispose of chips outside the right-of-way unless otherwise approved by the Engineer.

b. **Burning.** Obtain burning permits. Burn only trees, logs, brush, or stumps within the right-of-way in accordance with subsection 107.15.A.3. Do not use tires, heavy distillates, or plastics as kindling agents. Dispose of remaining material outside the right-of-way or in other Engineer-approved areas.

B. **Selective Thinning.** Remove and dispose of undesirable trees, stumps, undergrowth, and debris outside areas designated for clearing. Treat stumps and stubs with a growth preventive material if required.

Protect plant life in accordance with subsection 201.03.A.2.

Dispose of materials in accordance with subsection 201.03.A.4.

The plans will show, or the Engineer will direct, trees and areas of undergrowth for removal by selective thinning. The Engineer will not consider this work complete until the Engineer's acceptance of the project.

Perform selective thinning in accordance with the following:

1. **Selective Thinning Type I.** Cut off stumps to no greater than 6 inches above the existing ground level and apply a growth preventive material the same day.

2. **Selective Thinning Type II.** Chip or grind stumps to 4 inches below the proposed ground level.

C. **Clearing for Fence.** Remove and dispose of trees, brush, stubs, stumps, and other vegetation on the fence line.

Clear no greater than 8 feet within the right-of-way. Do not clear outside the right-of-way, unless otherwise approved by the Engineer. Clear less than 8 feet where possible. Access fence work locations from other public rights-of-way to avoid or reduce the removal of existing vegetation. The Contractor is responsible for obtaining and providing the Engineer with written approval from the public landowner before accessing other public rights-of-way.

Cut trees, brush, shrubs, stumps, and other vegetation flush with the ground level. The Engineer will not require the removal of roots. Do not remove mature trees or bushes if trimming limbs will allow installation of the fence.

Treat stumps and stubs within 1 foot of the fence line with growth preventive material the same day.

Protect plant life in accordance with subsection 201.03.A.2.

Dispose of materials in accordance with subsection 201.03.A.4.

201.04. Measurement and Payment.

Pay Item	**Pay Unit**
Clearing	Acre
Thinning, Selective, Type __	Acre
Clearing, Fence	Station

A. **Clearing.** The Engineer will measure **Clearing** by horizontal area bounded by the outermost trees cut. The Engineer will establish the perimeter line along the outside faces of the trunks.

The cost of clearing areas up to 10 feet outside the limits of earth disturbance; State provided borrow areas; clear vision areas; or other areas designated on the plans is included in the unit price for related pay items unless clearing is a separate pay item.

If the Engineer directs clearing, not shown on the plans, beyond 10 feet outside the limits of earth disturbance, in non-state-provided borrow areas, or in clear vision areas, and the contract provides no separate pay item for **Clearing**, the Department will pay for this clearing as extra work.

If the Engineer directs the Contractor to return to perform additional clearing of areas less than ½ acre after the Engineer accepted the clearing of an area, the Department will pay for this clearing as extra work.

B. **Thinning, Selective.** The Engineer will measure **Thinning, Selective**, of the type specified, by horizontal area. The unit price for **Thinning, Selective** includes the cost of providing and applying growth preventive materials, where required.

C. **Clearing, Fence.** The Engineer will measure **Clearing, Fence** along the fence line by length. The Department will not provide additional compensation for handwork. The unit price for **Clearing, Fence** includes the cost of providing and applying growth preventive material, where required.

Section 202. REMOVING TREES, STUMPS, AND CORDUROY

202.01. Description. This work consists of removing trees and stumps with a diameter of at least 6 inches, located outside the clearing limits, and removing corduroy within the limits of the proposed roadbed and backfilling as required.

202.02. Material. Provide materials in accordance with the following:

Sound Earth 205
Granular Material Class III 902

202.03. Construction.

A. **Removing Trees or Stumps.** Remove and dispose of trees or stumps outside the clearing limits with a diameter of at least 6 inches. Remove non-ornamental fruit trees within the right-of-way, even if not shown on the plans. Remove and dispose of trees, stumps, roots, and debris in accordance with section 201.

If removing a stump may result in damage to existing utilities, remove the stump by chipping to a depth of at least 12 inches below the finished ground surface. Remove other stumps by chipping only if approved by the Engineer. Backfill removal areas with granular material Class III within the influence of the subgrade surface and sound earth outside the influence of the subgrade surface.

B. **Removing Corduroy.** Remove and dispose of logs, poles, stumps, brush, and other material embedded under the surface of an abandoned or existing road, within the limits of the proposed roadbed. Remove corduroy located in the roadbed if within 4 feet of the plan grade. Dispose of corduroy in accordance with section 201. Backfill trenches, excavated after the removal of corduroy, with granular material Class III.

202.04. Measurement and Payment.

Pay Item	**Pay Unit**
Tree, Rem, __ inch to __ inch	Each
Stump, Rem, __ inch to __ inch	Each
Tree, Rem, 37 inch or Larger	Each
Stump, Rem, 37 inch or Larger	Each
Corduroy, Rem	Station

A. **Trees and Stumps.** The Engineer will determine the size of trees by the diameter of the trunk, measured to the nearest full inch, at a point 4½ feet above the ground line at the base of the tree. The Engineer will measure trees with major limbs, lower than 4½ feet from the ground, at the smallest diameter below the limbs.

The cost of removing trees or stumps with a diameter less than 6 inches is included in other pay items.

Where more than one trunk has grown from a common stump, the Engineer will measure each trunk as a separate tree.

The Engineer will measure stump diameters, to the nearest full inch, at the top of the stump.

For stumps incorrectly shown on the plans as trees designated for removal, the Engineer will measure, and the Department will pay for removing stumps with the relevant stump removal pay item. If the contract does not include stump removal pay items, but does include tree removal pay items, the Department will pay for removing stumps with the relevant tree removal pay item.

The unit price for tree and stump removal pay items includes the cost of providing and placing backfill. Tree removal pay items include respective stump removal.

B. **Corduroy, Removal.** The Engineer will measure **Corduroy, Rem** along the road centerline. The unit price for **Corduroy, Rem** includes the cost of backfill. The Department will apply **Corduroy, Rem** if below the excavation limits required for other pay items.

Section 203. REMOVING DRAINAGE STRUCTURES, CULVERTS, AND SEWERS

203.01. Description. This work consists of removing, or abandoning, in whole or in part, drainage structures, culverts, and sewers, salvaging, storing, and disposing of removed materials; and backfilling and compacting the excavated sites.

203.02. Materials. Provide materials in accordance with the following:

Sound Earth 205
Granular Material Class III 902

203.03. Construction.

A. **Drainage Structures.** When removing or abandoning a drainage structure, rebuild and reconnect live sewers through the removal area. Maintain service of live sewers during construction operations.

If the plans show abandoning a drainage structure, remove the cover and break down the masonry in accordance with subsection 204.03. Dispose of materials in accordance with subsection 205.03.P and backfill in accordance with subsection 204.03.C.

B. **Culvert Pipe.** Completely remove pipe culverts as required, including end treatments.

Dispose of materials in accordance with subsection 205.03.P and backfill in accordance with subsection 204.03.C.

If extending an existing culvert, or replacing the existing end treatment, remove only those portions of the existing culvert pipe necessary to allow connection to the new work. Do not damage the remaining culvert pipe.

Bulkhead abandoned culvert pipes in accordance with subsection 402.03.E or use other Department-approved methods. If the Engineer determines that the culvert is not in suitable condition for abandonment, the Engineer will specify alternate treatment.

For culvert pipes with a top elevation within 5 feet of the top of pavement, and requiring abandonment, review the abandonment treatment with the Engineer.

C. **Sewer Pipe.** Remove sewers (storm, sanitary, or combined), or parts of sewers, requiring removal or interfering with the new construction.

Dispose of materials in accordance with subsection 205.03.P and backfill in accordance with subsection 204.03.C.

Remove only the part of the existing sewer necessary to allow the required connection to the new work when extending existing sewers or incorporating existing sewers into the new work. Trim the connecting sewer pipe edges to meet the required lines and grades without weakening or damaging those parts of the remaining sewer.

Bulkhead abandoned sewers in accordance with subsection 402.03.E or use other Department-approved methods. If the Engineer determines that the sewer pipe is not in suitable condition for abandonment, the Engineer will specify alternate treatment.

For sewer pipes with a top elevation within 5 feet of the top of pavement, and requiring abandonment, review the abandonment treatment with the Engineer.

203.04. Measurement and Payment.

Pay Item	Pay Unit
Dr Structure, Rem	Each
Dr Structure, Abandon	Each
Culv, Rem, Less than 24 inch	Each
Culv, Rem, 24 inch to 48 inch	Each
Culv, Rem, Over 48 inch	Each
Culv, End, Rem, Less than 24 inch	Each
Culv, End, Rem, 24 inch to 48 inch	Each
Culv, End, Rem, Over 48 inch	Each
Sewer, Rem, Less than 24 inch	Foot
Sewer, Rem, 24 inch to 48 inch	Foot
Sewer, Rem, Over 48 inch	Foot

A. **General.** Unless otherwise required, the Engineer will measure structures or materials in the original positions.

The unit prices for the removal pay items include the cost of breaking down structures and material; sawing, removal, and disposal; providing, placing, and compacting backfill; and providing and placing replacement soil or base material.

The Department will pay for piling or timber cribs encountered during structure removal, but not shown on the plans, as extra work.

B. **Drainage Structure, Removal and Drainage Structure, Abandon.** The unit prices for **Dr Structure, Rem**, and **Dr Structure, Abandon** include the cost of maintaining and reconnecting live sewers and of removing attached parts and connections.

C. **Culvert, Removal and Culvert End, Removal.** The Engineer will measure elliptical or pipe arch culverts across the greatest dimension. The cost of removing existing end treatments,

regardless of type, is included in the unit prices for the related culvert removal or culvert end removal pay items.

D. **Removal of Pipes (culverts, sewers, underdrains, etc.) With Diameters Less Than 12 inches.** The cost of removing pipes, including culverts, sewers, and underdrains, with diameters less than 12 inches, if portions of the existing pipe are within the excavation limits of a new structure, culvert, or sewer, is included in the unit price for constructing the new structure, culvert, or sewer.

E. **Abandoning Pipe Culverts and Abandoning Sewers.** The Department will not pay separately for abandoning pipe culverts and abandoning sewers.

Unless included in the unit price for abandoning drainage structures, the Department will pay for bulkheads greater than 12 inches, required in abandoning pipe culverts and abandoning sewers, as **Sewer Bulkhead** of the type required, in accordance with subsection 402.04.D.

F. **Removal of End Treatments.** The Department will pay for removing end treatments on existing sewers as **Culv End, Rem**.

Section 204. REMOVING MISCELLANEOUS STRUCTURES AND MATERIALS

204.01. Description. This work consists of removing miscellaneous structures and materials to clear the right-of-way, salvaging or disposing of removed materials, and backfilling the resulting excavated sites.

204.02. Materials. Provide materials in accordance with the following:

Sound Earth 205
Granular Material Class III 902

204.03. Construction.

A. **Breaking Down and Removing.** Remove structures or portions of structures entirely or to the limits required, including attached parts and connections. Do not damage the remaining portion of an existing structure.

1. **Partial Removal.** Break down portions of existing miscellaneous structures, not interfering with the new construction, to 3 feet below the pavement surface within the limits of the roadbed and to 1 foot below the finished grade outside the limits of the roadbed.

2. **Pavement, Curb, Sidewalk.** Remove pavement, curb, gutter, curb and gutter, sidewalk, downspout headers, and similar structures to an existing joint or to a sawed joint. Saw concrete full depth unless otherwise approved by the Engineer. Provide for proper grades and connections to new work.

   All anticipated pavement removal operations conducted over utilities and other critical areas identified on the plans must be saw cut and the pavement removed full depth in such a manner to not disrupt or damage these utilities or critical areas. Impact or vibratory type equipment is not permitted.

   Replace adjacent soils or base materials removed with concrete removal operations with similar material approved by the Engineer.

3. **Masonry and Concrete Structures.** Remove entirely, or break down walls, foundations, and similar structures, excluding bridges, culverts, or retaining walls, in accordance with subsection 204.03.A.1.

4. **Basement Cleanout.** Remove existing backfill material from basements, break up floors, plug drains, and backfill.

5. **Structures and Retaining Walls.** During Contractor's removal operations, protect the remaining portions of existing structures and new work under construction from damage.

If the contract requires salvaging part of a steel structure, before dismantling, match-mark with paint, the members designated for re-erection. Match-mark pins, nuts, loose plates, and parts to show proper locations. Treat pins, pin holes, and machined surfaces to prevent corrosion. Wire loose parts to adjacent members or pack in match-marked containers.

If the contract requires incorporating portions of an existing concrete structure into the new construction, use a concrete saw to make the concrete cuts that will be exposed in the final work. Do not overcut corners; drill and chip to provide square corners. Avoid cutting reinforcing steel wherever possible. Do not cut off steel reinforcement projecting from the existing concrete structure. Protect projecting steel reinforcement from damage and embed it in the new concrete.

Do not use explosives, unless the Engineer provides written permission in accordance with subsection 107.17. The Engineer's written permission does not relieve the Contractor of liability and responsibility for damages resulting from the use of explosives.

6. **Culvert Structures.** Remove culvert structures or parts of culvert structures required for removal, or that interfere with the new construction.

   For contracts requiring extension or incorporation of existing culvert structures into the new work, remove only enough of the existing structure to allow a connection to the new work. Trim the connecting edges of the existing culvert structure to the lines and grades required, without weakening or damaging that part of the structure.

7. **Railway Trackwork.** Remove rails; paving; timber, rubber or concrete crossing panels; ties; track encasement; concrete header foundations; and other related items. Leave crushed stone or gravel ballast in place as directed by the Engineer.

8. **Guardrail.** Remove posts, beam elements, anchorages, including concrete blocks, steel sleeves, or both, hardware, and other items.

9. **Utility Pole.** Remove poles, parts, and connections attached to utility poles.

10. **Fence.** Remove fence fabric, wire, posts, and foundations.

11. **Concrete Barrier and Glare Screen.** Remove concrete barrier, glare screen, and footings to an existing joint or sawed joint. Backfill as required. Remove barrier footings and post footings entirely. Saw cut concrete full depth unless otherwise approved by the Engineer. Repair damage to existing manholes, catch basins, bridge piers, and remaining concrete barrier, glare screen, and footings, which result from removal operations.

    For contracts requiring extension or incorporation of existing barrier footings and/or post footings into the new work, remove only enough of the existing footing to allow a connection to the new work.

B. **Disposal of Materials.** Assume ownership of removed materials. Without damaging, remove materials salvaged for use by the Department, local agency, or others, and store outside the construction limits in a location and manner approved by the Engineer. Dispose of materials not incorporated into the new work in accordance with subsection 205.03.P, before the Department accepts the project.

The Contractor may salvage materials that meet specification requirements and use in the new work.

Dispose of broken concrete, matted together by steel reinforcement, outside the right-of-way. Provide the Engineer with written permission from the property owner of the disposal site.

C. **Backfilling.** Backfill excavated sites or holes resulting from removals within the influence of the subgrade surface limit with granular material Class III. Place and compact the granular material in accordance with the controlled density method in subsection 205.03.H.4.a.

For excavated sites outside the influence of the subgrade surface, backfill with sound earth in accordance with subsection 205.03.H.4.a.

204.04. Measurement and Payment.

Pay Item	Pay Unit
Pavt, Rem	Square Yard
Curb, Rem	Foot
Gutter, Rem	Foot
Curb and Gutter, Rem	Foot
Sidewalk, Rem	Square Yard
Basement Cleanout	Cubic Yard
Track, Rem	Foot
Utility Pole, Rem	Each
Structures, Rem (Structure Identification)	Lump Sum
Structures, Rem Portions (Structure Identification)	Lump Sum
Culv, Other than Pipe, Rem	Each
Masonry and Conc Structure, Rem	Cubic Yard
Guardrail, Rem	Foot
Fence, Rem	Foot
Conc Barrier, Rem	Foot
Glare Screen, Rem	Foot

A. **General.** Unless otherwise required by the contract, the Engineer will measure the structure or material quantities in their original position.

The cost of breaking down and removing, sawing, disposing of materials, and providing, placing, and compacting backfill is included in the unit price for the related pay items. The cost of providing and placing replacement soils or base materials is included in the related pay items.

The Department will pay for piling or timber cribs encountered during removal of structures, but not shown on the plans, as extra work.

B. **Pavement, Removal.** The limits of **Pavt, Rem**, as shown on the plans, will be established at the discretion of the Engineer. The Engineer may decide to leave areas in place or remove additional sections to attain the required cross-section and base. The Engineer will measure **Pavt, Rem** in accordance with the following criteria.

1. **HMA Pavements and HMA Driveways.** The Department will pay separately for the removal of curb, curb and gutter, or gutter in conjunction with removing Hot Mix Asphalt (HMA) pavements or HMA driveways.

   a. **HMA No Greater Than 12 Inches Thick.** The Engineer will measure the removal of HMA surface, no greater than 12 inches thick, overlying a material designated for removal or that is required to remain in place, as **HMA Surface, Rem** in accordance with subsection 501.04.H. The Engineer will measure the removal of the underlying material separately.

   b. **HMA Greater Than 12 Inches Thick.** The Engineer will measure the removal of HMA surface, greater than 12 inches thick, overlying a material designated for removal or that is required to remain in place, as **Pavt, Rem**. The Engineer will measure the removal of the underlying material separately.

2. **Concrete and Masonry Pavements and Concrete Driveways.** The Engineer will measure the removal of concrete and masonry pavements and concrete driveways as **Pavt, Rem**.

   If concrete or masonry pavements are encountered under the pavement being removed, the Engineer will measure each type of additionally encountered pavement at the unit price for **Pavt, Rem**. The Department will consider a concrete overlay a separate pavement.

   The Engineer will measure the removal of curb, curb and gutter, or gutter in conjunction with removing concrete or masonry pavement or concrete driveways, as **Pavt, Rem**.

C. **Curb, Removal; Gutter, Removal; or Curb and Gutter, Removal.** The Engineer will measure **Curb, Rem**; **Gutter, Rem**; and **Curb and Gutter, Rem**; if included as separate pay items, and not removed in conjunction with pavement or driveway removal, along the base of the curb face or along the flowline of the gutter.

The unit prices for **Curb, Rem**; **Gutter, Rem**; and **Curb and Gutter, Rem** include the cost of removing downspout headers.

D. **Sidewalk, Removal.** The unit price for **Sidewalk, Rem** includes the cost of removing and disposing of sidewalk, 6 inches thick, or less. The Engineer will measure sidewalk greater than 6 inches thick as **Pavt, Rem** in accordance with subsection 204.04.B.

E. **Basement Cleanout.** The Engineer will calculate the volume of **Basement Cleanout** on the elevation of the existing backfill, the elevation of the floor, and the inside dimensions of the foundation. The Engineer will measure **Basement Cleanout** outside the pay limits for **Excavation, Earth**, in accordance with subsection 205.04.

F. **Track Removal.** The Engineer will measure **Track, Rem** by length of single line track. The unit price for **Track, Rem** includes the cost of removing rails, ties, track encasement, stone or ballast as directed, concrete header foundations and other related items.

The Engineer will measure removal of pavement from between the rails and on either side of the track as **Pavt, Rem** in accordance with subsection 204.04.B.

G. **Utility Pole Removal.** The unit price for **Utility Pole, Rem** includes the cost of removing and disposing of the pole, attached parts, and connections.

H. **Structures, Removal and Structures, Removal, Portions.** The unit prices for **Structures, Rem** and **Structures, Rem Portions** include the cost of removing and disposing of miscellaneous structures or portions of structures.

I. **Payment for Culvert, Other than Pipe, Removal.** The unit price for **Culv, Other than Pipe, Rem** includes the cost of breaking down, removing, sawing, and disposing of materials, and providing, placing, and compacting backfill.

J. **Payment for Masonry and Concrete Structures, Removal.** The Department will only pay for **Masonry and Conc Structure, Rem** if the smallest dimension of the masonry or concrete structures, or parts of masonry or concrete structures, is at least 12 inches, and the smallest dimension of reinforced concrete structures is at least 8 inches. The Department will pay for the removal of other masonry and concrete structures as **Excavation, Earth**, in accordance with subsection 205.04.

K. **Guardrail, Removal.** The Engineer will measure **Guardrail, Rem** along the face of the existing guardrail installation. The unit price for **Guardrail, Rem** includes the cost of the removal and disposal of multiple beam elements, posts, anchorages, including concrete blocks and sleeves, hardware, and other items.

L. **Fence, Removal.** The unit price for **Fence, Rem** includes the cost of removing and disposing of fence fabric, wire, posts, and foundations.

M. **Concrete Barrier, Removal.** The Engineer will measure **Conc Barrier, Rem** along the centerline of the barrier. The Engineer will measure the removal of split concrete barrier along

the centerline of barrier or glare screen on each side, without deductions for bridge piers. The unit price for **Conc Barrier, Rem** includes the cost of breaking down and removing, sawing, disposing of materials, providing, placing and compacting backfill, and repairing damage to existing items that are damaged during removal operations.

If the pay item **Glare Screen, Rem** is not included in the contract, the cost of removing glare screen in conjunction with concrete barrier removal is included in the unit price for **Conc Barrier, Rem**.

N. **Glare Screen, Removal.** The Engineer will measure **Glare Screen, Rem** along the centerline of the screen. The unit price for **Glare Screen, Rem** includes the cost of breaking down and removing, sawing, disposing of materials, and repairing existing concrete barrier damaged during removal operations.

O. **Bulkheads.** The cost of bulkheading abandoned pipes, conduits, or service connections, with a diameter no greater than 12 inches, encountered in excavation, is included in other related pay items. The Engineer will measure bulkheading abandoned pipes, conduits, or service connections, with a diameter greater than 12 inches as **Sewer Bulkhead** in accordance with subsection 402.03.E.

Section 205. ROADWAY EARTHWORK

205.01. Description. This work consists of the following:

A. Constructing earth grades by excavating soil or rock and placing embankments or fills;
B. Salvaging and stockpiling selected materials;
C. Providing, placing, and compacting embankment materials;
D. Trimming the earth grade;
E. Disposing of surplus or unsuitable material; and
F. Maintaining the work in a finished condition until accepted by the Engineer.

Earth excavation consists of the work to excavate materials not otherwise addressed in the contract as separate work items. Rock excavation and subgrade undercutting are separate work items.

Investigate local conditions before bidding, in accordance with subsection 102.04. Boring logs shown on the plans are for information only. Refer to the *Geotechnical Manual* for detailed data regarding soils descriptions.

Terminology.

CIP. A term, when used with an embankment item, that denotes compacted-in-place.

LM. Refer to section 109.01.B.2.

Sound Earth. A natural homogeneous material comprised of soil or aggregate that can be compacted to the required density, contains no visible organic material, and has a maximum unit weight of at least 95 pounds per cubic foot.

Frost Heave Textured Material. A material with more than 50 percent silt particles by weight, and a plasticity index less than 10.

Silt. A material with a particle size from 0.002 mm to 0.075 mm.

205.02. Materials. Provide materials in accordance with the following:

Granular Material Class II, III 902
Open-Graded Aggregate..... 902
Geosynthetics 910

Do not use foundry sand from metal casting for roadway earthwork.

Refer to the *Density Testing and Inspection Manual* for maximum unit weight and in-place density test methods.

205.03. Construction. Before beginning earth disturbing activities, install soil erosion and sedimentation control (SESC) measures, in accordance with section 208.

The Department considers buried rubbish and trash, not identified in the contract, a differing site condition in accordance with subsection 103.02.C. All buried rubbish and trash found must be disposed of properly.

A. **Preparing Roadway Foundation.** Remove material from the roadway foundation and salvage or dispose. Compact the roadway foundation to the depth and density required.

Perform removal, salvage, and disposal operations in accordance with the following:

1. **Removing and Salvaging Topsoil.** Before removing topsoil, reduce vegetation to a height of 6 inches. Remove and dispose of cut vegetation, brush, rocks, and other unsuitable material.

   Remove topsoil to the required depth from designated areas before excavating or placing embankment. Use equipment and methods that avoid lifting subsoil. Suspend topsoil removal if the Engineer determines soil or weather conditions are unsuitable.

   Submit a request to the Engineer, in accordance with subsection 104.12, to temporarily stockpile topsoil inside the right-of-way.

   Prior to temporarily stockpiling topsoil outside the right-of-way, obtain written permission from the owner of the property designated for material placement and required permits in accordance with subsection 208.03.A. Provide documentation to the Engineer before stockpiling topsoil. Do not stockpile temporarily or permanently in wetlands or floodplains.

   Remove topsoil as follows:

   a. In peat and muck areas, do not remove topsoil;
   b. In borrow and clear vision areas, remove topsoil to the depth and width required;
   c. At inlet, outlet, and berm ditch areas, remove topsoil within the construction limits; and
   d. At roadway cut and embankment areas, remove topsoil within the limits of earth disturbance.

2. **Salvaging Materials.** Remove existing gravel, crushed stone, or selected excavated materials. The Contractor may salvage these materials. The Engineer may approve the use of salvaged materials to construct earth shoulders, approaches, temporary roadway surfacing, or other work the Engineer determines appropriate. Do not salvage foreign or undesirable material. Temporarily stockpile salvaged material outside the limits of Contractor's earth disturbance, and within the right-of-way limits, as approved by the Engineer.

Surplus salvaged material is the property of the Contractor. Dispose of surplus salvaged materials in accordance with subsection 205.03.P before project completion.

3. **Disposing of Stones, Broken Rock, and Boulders.** For material that cannot be incorporated in the work, dispose of materials in accordance with subsection 205.03.P.

B. **Rock Excavation.** Excavate boulders with a volume of at least ½ cubic yard. Excavate rock or cemented soils that do not soften when wet or that cannot be removed without continuous drilling, blasting, or continuous use of a ripper or other special equipment.

Expose the surface of the rock to allow the Engineer to measure before starting rock excavation. Remove rock encountered in the excavation to the required cross section and in accordance with all of the following:

1. Excavate so no rock extends more than 6 inches above the lines of the required cross section.
2. Excavate backslopes to the neat line slopes shown on the plans, with no rock extending more than 12 inches from the true slope.
3. Excavate the rock surface to provide drainage. Do not leave undrained pockets in the rock surface.
4. Remove rock or boulders loosened in the excavation and overhanging ledges, on or outside the required cross section.

C. **Peat Excavation.** Remove peat, muck, marl, and underlying very soft clay. Coordinate removal with swamp backfill operations.

D. **Swamp Backfill.** Construct embankments across peat marshes as shown on the plans. Widen the embankment at culvert locations to provide a stable foundation for the length of the culvert, including headwalls and end sections. Provide granular material Class III for swamp backfill.

If total excavation of peat results in a reasonably dry trench as determined by the Engineer, the Engineer may allow backfilling as a separate operation. Backfill the reasonably dry trench immediately after completing the excavation in accordance with the controlled density method in subsection 205.03.H.4.a. Perform excavation and backfill as separate operations in shallow peat areas only with the Engineer's prior approval.

Coordinate the rate of advancement of the embankment and surcharge in deep swamps with the rate of excavation of the upheaved peat. If a trench of the required depth is not maintained full width ahead of the surcharge, use additional peat excavating equipment or stop construction of embankment and surcharge until the two operations are in balance.

Dispose of peat as shown on the plans or in accordance with subsection 205.03.P.

The Department will bore swamp backfill to determine if unsuitable material is completely excavated or displaced. If the borings show the presence of unsuitable material under the swamp backfill, the Department will determine the corrective action. The Department will complete borings and notify the Contractor of corrective actions within 60 days after completion of the swamp backfill.

Corrective action may consist of excavating, placing a surcharge, excavating relief trenches, or a combination of these actions.

If placing a surcharge over the swamp backfill, the Engineer will determine the width and elevation. Leave the surcharge in place until the Engineer determines that the swamp backfill is stable, or the required settlement has taken place. The Engineer may require that the surcharge remain in place for up to 90 days.

Material from the surcharge is the property of the Contractor.

Obtain the Engineer's approval of swamp backfill and complete peat excavation and spreading before placing the pavement structure.

E. **Subgrade Undercutting.** Undercut the subgrade and backfill to replace material susceptible to frost heaving or differential frost action and to remedy unstable soil conditions.

Topsoil removal and peat excavation are not included in subgrade undercutting. Subgrade undercutting includes excavation below subgrade in cut sections, excavation at the transition from cut to fill sections, and excavation, other than peat excavation, as required below the topsoil in fill sections.

Excavated material from subgrade undercutting is the property of the Contractor.

1. **Limits of Subgrade Undercutting.** Excavate the subgrade to the approximate grade. The Engineer will promptly inspect the grade to decide the necessity of undercutting, and to determine the limits of undercutting.

   In shallow fill areas, the Engineer will inspect the fill area and determine the limits of the subgrade undercutting before the Contractor begins embankment placement.

   Remove deposits of frost heave textured material within the subgrade surface limit. For areas north of the north boundary of Township 12 North, remove the frost heave textured material to a depth of 4 feet to 5 feet below the plan grade. For areas south of the north boundary of Township 12 North, remove the frost heave textured material to a depth of 3½ feet to 4 feet below the plan grade.

2. **Backfill of Subgrade Undercut.** Backfill subgrade undercutting Type I with selected clay or other Engineer-approved material.

Backfill subgrade undercutting Type II with granular material Class II.

Backfill subgrade undercutting Type III with the material excavated from subgrade undercut areas, after mixing the excavated material to break up the undesirable strata of soils, or with other Engineer-approved backfill material.

Backfill subgrade undercutting Type IV with 21AA dense-graded aggregate or 4G open-graded aggregate. Encapsulate 4G aggregate with geotextile separator.

Compact subgrade undercutting backfill to at least 95 percent of its maximum unit weight.

F. **Subgrade Manipulation.** Scarify, mix, and blend the roadbed subgrade to a depth of 12 inches below the top of subgrade. Compact to at least 95 percent of its maximum unit weight.

G. **Earth Excavation.** Excavated material, except as specified in subsection 205.03.A, is the property of the Contractor.

Compact the subgrade to at least 95 percent of its maximum unit weight and to a depth of at least 10 inches. If the subgrade cannot be compacted to 95 percent of its maximum unit weight, using conventional construction methods, the Engineer may authorize use of other methods to attain compaction.

In cut sections where the existing material appears to meet the requirements of subsection 301.02, excavate the grade to top of subbase rather than to the bottom of subbase. The Engineer will then determine whether the existing material meets subbase requirements. Shape material meeting subbase requirements to the top of subbase grade and compact to at least 95 percent of its maximum unit weight and to a depth of at least 12 inches. The Engineer will adjust earthwork quantities accordingly. Excavate material not meeting subbase requirements to the bottom of subbase. The Department will not consider claims for damage caused by the Contractor halting grading operations so the Engineer can make subbase determinations.

Maintain the roadbed and ditches and provide drainage at all times. Install and remove temporary drainage facilities at no additional cost to the Department.

Perform grading to avoid removing or loosening material outside the required slopes. Replace and compact material removed or loosened outside the slopes to the required density and cross section.

Dispose of surplus or waste material resulting from ditch construction in accordance with subsection 205.03.P. Remove roots, stumps, or other materials unacceptable to the Engineer in the slopes and bottom of the ditch and backfill the holes with suitable material. Maintain ditches until the Engineer's final acceptance.

H. **Roadway Embankment.**

1. **Stepping Side Slope.** Step embankments, constructed on existing side slopes of 1:6 or steeper, before placing embankment. Form steps with a horizontal dimension of at least 3 feet according to Standard Plan R-105 series.

2. **Borrow.** Borrow is defined in subsection 105.03. Excavate, transport, and place borrow material in accordance with subsection 105.03 and the following.

   After removal of borrow, leave borrow areas free-formed without rigid geometric shapes. Make side slopes as flat as practical, but ensure slopes no steeper than 1:4. Round the tops and bottoms of slopes with vertical curves to blend into adjacent terrain. Grade overburden left in the borrow area, except topsoil, to eliminate unsightly mounds, as determined by the Engineer.

   Where practical, shape borrow areas to drain, leaving usable land after completion. In granular soil, leave the area at least 12 inches above the high ground water level. In cohesive soil, leave the area at least 12 inches above the high water elevation of the drainage outlet.

   If the borrow area cannot be drained, create a pond or a wetland. Create ponds by excavating to a depth of at least 8 feet below normal ground water level in granular soil, or to 8 feet below the lowest drainage outlet in cohesive soil. Create wetlands by excavation to the elevation directed by the Engineer.

   Restore borrow areas as shown on the plans, or in a manner that will leave the land in a useful condition and with a natural appearance. Restore borrow areas within the right-of-way as required by the contract. Fence ponded borrow areas, unless otherwise directed by the Engineer.

   Restore borrow areas outside the right-of-way in accordance with permit requirements covered by Part 91 Soil Erosion and Sedimentation Control, MCL 324.9101, et. seq. and any land use agreements with the property owner.

   The Engineer may allow boulders to remain in borrow areas, if placement creates a natural appearance.

   The Engineer may waive restoration requirements if the Contractor takes borrow from the working area of an existing commercial source, or the property owner holds a permit from a county or municipal enforcing agency, designated under Part 91 Soil Erosion and Sedimentation Control, MCL 324.9101, et. seq.. Provide the Engineer with a copy of the property owner's permit.

3. **Winter Grading.** The Engineer will determine the winter grading limits. Remove ice and snow from the ground surface before placing embankment.

Remove frozen material if the original ground contains more than 4 inches of frost within the limits of 1:1 slopes extending away from the finished shoulders to points of intersection with the original ground.

Remove frozen material on a partially complete fill before placing more fill on the embankment. Stockpile frozen material in areas approved by the Engineer and outside the limits of earth disturbance until thawed. Use the thawed material in the embankment if it meets moisture requirements at the time of use.

4. **Placing and Compacting Embankment.** After preparing the ground area, construct embankments with sound earth and stones, broken rock, concrete, or masonry, except within the top 3 feet of embankment, or as allowed in the disposal of peat excavation material in accordance with subsection 205.03.D, and subsection 205.03.P. Do not place frost heave textured materials in the top 3 feet of embankment below subgrade surface. Use a uniformly textured material to construct the top 3 feet of embankment to a uniformly stable condition. Provide at least 50 feet longitudinal transition between two types of textured materials.

   Deposit embankment materials and compact in accordance with the controlled density method. The Engineer may direct or approve the 12-inch layer method, rock embankment method, or methods for treatment of peat marshes.

   Construct embankments using methods that do not create an unstable slope condition. Do not block the drainage of granular material by placing impervious material on the outside of embankments, or by placing a combination of pervious and impervious material in the embankment, creating potential pockets of saturated material. Do not place peat excavation material in upland areas between the 1:1 slope that extends down from the subgrade surface/front slope intercept point and the final plan fill slope, in fills greater than 14 feet high.

   The Engineer may allow placement of stones uncovered within construction limits, broken concrete, and broken rock from rock cuts in embankments. Use stones, broken concrete, and broken rock with the largest dimension no greater than 12 inches. Place in layers. Fill voids with sound earth and compact to at least 95 percent maximum unit weight. Do not place stones, broken concrete, and broken rock layers within 3 feet of the subgrade surface.

   Where placing embankment in layers of the required thickness is not feasible, such as filling in water or constructing on poorly drained soil, the Engineer may allow construction of the embankment in one layer of granular material Class III and will determine the minimum elevation for equipment operation. Thoroughly compact the fill material. Above the granular material Class III elevation, construct the embankment in accordance with the controlled density method.

   Backfill and compact embankment adjacent to structures in accordance with subsection 205.03.I and subsection 206.03.B. Construct other embankment and backfill as follows:

a. **Controlled Density Method.** Deposit cohesive material for embankments and spread in layers no greater than 9 inches deep, loose measure, and extending to the full width of the fill area.

For granular material, attain the required density by depositing, spreading, and compacting in layers no greater than 15 inches deep.

Provide cohesive material with a moisture content no greater than 3 percent above optimum, at the time of compaction. Provide granular material with a moisture content below saturation, in accordance with the one-point cone chart in the *Density Testing and Inspection Manual*.

Provide cohesive material in the top 3 feet of embankment with a moisture content not exceeding optimum at time of compaction. For material containing excess moisture, dry to the required moisture content before compacting. Ensure each layer of material meets moisture requirements and compact each layer to at least 95 percent of the maximum unit weight, before placing the succeeding layer.

If the required percentage of maximum unit weight and the required moisture content are attained, but the compacted material does not provide support for the subbase, the Engineer may direct the Contractor to dry the material by aeration and recompact. Aerate by disking or manipulating the material by other methods approved by the Engineer.

b. **Twelve Inch Layer Method.** Deposit the material and spread in layers no greater than 12 inches deep, loose measure, parallel to the finished grade, and extending to the full width of the embankment. Deposit the material by operating the hauling equipment over the layer being placed. Compact each layer to at least 95 percent of its maximum unit weight in accordance with the 12-inch layer method test in the *Density Testing and Inspection Manual*.

c. **Rock Embankment.** Use shattered rock from blasting or ripping, with the largest dimension no greater than 12 inches, to construct rock embankment. Deposit rock on the constructed fill and push over the leading edge to extend the fill. Do not deposit the shattered rock from the hauling equipment, directly over the end of the fill. Place the rock embankment in layers no greater than 3 feet thick. Fill the surface of the rock embankment with rock fragments and rock fines to prevent infiltration of the earth embankment. Use granular material Class III to supplement insufficient rock fines to fill the surface of the rock embankment.

Do not use this method in fills less than 4 feet deep. Do not place the stones and broken rock layers within 3 feet of the subgrade surface. For structures located under rock embankment, provide at least 24 inches of granular material Class III along the sides and the top of structures, before placing the rock embankment.

I. **Structure Embankment**.

1. **Compaction of Original Ground.** In fill areas on which a structure is required, remove the topsoil from the area within the toes of slope in accordance with subsection 205.03.A.1. Compact the area to at least 95 percent of the maximum unit weight, and at least 9 inches deep.

2. **Placing Structure Embankment.** Place and compact structure embankment to the limits shown on the plans before casting overlying footings. Protect structure embankments from freezing until placement of overlying footings.

   a. **Under Structure Footings Supported by Piling.** Construct structure embankment with Class III granular material within the limits shown on the plans. The Engineer may allow the use of sound earth as an alternate material when placed between April 1 and November 15. Use sound earth, as defined in subsection 205.01, except that for rocks, the greatest dimension must be less than 3 inches. Deposit and compact structure embankment in accordance with the controlled density method.

   b. **Under Structure Footings for Which Piling is Not Specified.** Construct structure embankment with Class III granular material within the limits shown on the plans and deposit and compact in accordance with the controlled density method. Compact structure embankment to 100 percent of the maximum unit weight within the limits of 1:1 slopes, extending outward and downward from the bottom edges of the structure footings.

3. **Winter Grading for Structure Embankment.** Construct embankment during winter weather in accordance with subsection 205.03.H.3, except, before placing embankment to support a structure, remove ground containing frost within the limits of 1:1 slopes spreading outward in every direction from the bottom edges of structure footings. Stockpile frozen material outside the limits of earth disturbance in areas, approved by the Engineer, until thawed.

J. **Machine Grading.** Machine grading consists of light grading, 12 inches deep, to develop the cross section shown on the plans and includes the following:

1. Scarifying;
2. Plowing;
3. Disking;
4. Moving;
5. Compacting; and
6. Shaping the earth.

Loading or hauling material is not required for machine grading.

Grade ditches to drain runoff water. Grade intersections, approaches, entrances, and driveways as shown on the plans or as directed by the Engineer. Obtain the Engineer's approval before using excavation from ditches and roadbeds for shaping shoulders and adjacent fills.

K. **Ditch Cleanout.** Perform ditch cleanout, to a depth no greater than 2 feet, based on a typical cross section shown on the plans, including the following work:

1. Removing cattails, brush and miscellaneous debris;
2. Removing trees with a diameter less than 6 inches;
3. Blending ditch profiles to match the existing ditch; and
4. Removing soils/spoils from the project site.

L. **Temporary Railroad Crossing.** Construct temporary railroad crossings in accordance with subsection 107.20.

M. **Granular Blanket.** Excavate unstable soil in the slopes and backfill within the limits and to the depths shown on the plans, or as directed by the Engineer. Dispose of excavated material in accordance with subsection 205.03.P.

For granular blanket, Type 1, backfill with granular material Class II.

For granular blanket, Type 2, dress the excavated area with a nominal 3-inch layer of granular material Class II before placing the drainage layer. Construct the drainage layer using one of the following:

1. A 2-inch layer of open-graded aggregate with geotextile blanket above and below;
2. A three-dimensional mesh with geotextile blanket above and below; or
3. Other geocomposite section approved by the Engineer.

Place at least a 12-inch layer of granular material Class II on the drainage layer to bring the slope and ditch section to the required elevation and cross section.

Construct underdrains adjacent to, or as a part of the slope protection, in accordance with section 404.

N. **Trimming and Finishing Earth Grade.** Construct the earth grade to the required grade. Remove exposed stones and rocks with a diameter greater than 3 inches.

Trim the subgrade to the grade shown on the plans. If a subbase is required, trim the subgrade to within 1 inch of the required grade. If a subbase is not required, trim the subgrade to within ¾ inch of the required grade.

Trim and shape the earth grade outside the subgrade to the required lines, grades, and cross sections. Finish slopes to Class B tolerance unless Class A tolerance is required.

Finish Class A slopes to within 1 inch of the average slopes shown on the plans. Make measurements at right angles to the slope.

Finish Class B backslopes to within 6 inches of the average slopes shown on the plans. Make measurement at right angles to the slope. Do not leave abrupt variations in the finished surface. Remove debris and unsuitable material.

Finish Class B fill slopes to within 2½ inches of the required grade and cross section, from the outside shoulder line for 3 feet down the slope. Measure at right angles to the slope. Finish the remainder of the fill slope the same as Class B backslope.

If trees or other obstacles do not interfere, round the tops of backslopes, bottoms of fill slopes, and other angles in the lines of the cross section, to form vertical curves as shown on the plans or as directed by the Engineer. Make vertical curve transitions gradual and present a uniform and attractive appearance. The Contractor may omit vertical curves if constructing ditches in peat.

O. **Channel Excavation.** Trim, straighten, widen, deepen, or relocate the channel of a stream or watercourse. Remove and dispose of excavated material. Remove masonry and concrete structures in accordance with section 204. Complete work in the new channel before diverting the stream flow to the new channel. Maintain channels and keep free from debris until final acceptance of the channel.

P. **Disposing of Surplus and Unsuitable Material.** The Department assumes no legal obligation to ensure the Contractor responsibly disposes of surplus and unsuitable material in accordance with this section. Permits must be obtained in accordance with subsection 107.02 as necessary.

1. **Disposal Within the Right-of-Way.** Do not dispose of material, temporarily or permanently, beyond the normal plan fill slope across regulated or nonregulated wetlands or floodplains. The Engineer may allow disposal of material, including associated restoration, within the right-of-way to fill low areas or flatten slopes, at no additional cost to the Department.

2. **Disposal Outside the Right-of-Way.** Do not dispose of material, temporarily or permanently, in regulated or nonregulated wetlands or floodplains. Prior to excavation, obtain and file, with the Department, written permission from the owner of the property including restoration requirements for disposal outside the right-of-way. Dispose of material and restore areas in accordance with subsection 205.03.H.2, at no additional cost to the Department.

3. **Contractor Responsibility.** The Contractor is directly and solely responsible for disposal of surplus and unsuitable material.

Contact the appropriate regulatory agencies to determine if an area is a regulated or nonregulated wetland or floodplain, before disposing surplus or unsuitable material in areas outside the right-of-way and not shown on the plans as disposal sites.

Immediately move surplus or unsuitable material, disposed in portions of regulated or nonregulated wetlands or floodplains not shown on the plans as disposal sites, to an upland site, at no additional cost to the Department. Restore the vacated area as directed by the regulatory agencies, at no additional cost to the Department.

The Engineer will not consider requests for extensions of contract time without assessment of liquidated damages for delays associated with moving surplus or unsuitable material to an upland site.

4. **Notification to Regulatory Agencies.** The Department will notify the regulatory agencies if the Department becomes aware that the Contractor disposed of surplus or unsuitable material in portions of a regulated or nonregulated wetland or floodplain not shown on the plans.

Q. Berm Grading. Remove existing earthen berms along shoulders of the roadway including under existing guardrail to facilitate drainage. Remove all berms from the paved shoulder to the hinge point of the fill slope and grade the slope to provide positive drainage or to the dimensions shown on the plans. Removed berm material, if approved for reuse must be in accordance with subsection 107.15. Dispose of surplus or unsuitable material in accordance with subsection 205.03.P.

205.04. Measurement and Payment.

Pay Item	Pay Unit
Excavation, Earth	Cubic Yard
Granular Material, Cl __	Cubic Yard
Excavation, Rock	Cubic Yard
Excavation, Peat	Cubic Yard
Backfill, Swamp	Cubic Yard
Subgrade Undercutting, Type __	Cubic Yard
Subgrade Manipulation	Square Yard
Embankment, LM	Cubic Yard
Embankment, CIP	Cubic Yard
Embankment, Structure, CIP	Cubic Yard
Machine Grading	Station
Ditch Cleanout	Station
Granular Blanket, Type __	Cubic Yard
Excavation, Channel	Cubic Yard
Berm Grading	Station

A. **Roadway Earthwork Volumes.** Prior to the start of the work, the Engineer and Contractor may agree to accept plan quantity or the Engineer will calculate roadway earthwork volumes using the average end areas, the staked-section method, or an agreed to alternative method.

The Engineer will determine the average end areas using the cross sections determined from the original and final elevation measurements. An alternative method such as a comparison of digital terrain models may be used if agreed upon by the Contractor and the Engineer prior to the start of work.

For the staked-section method, the Engineer will calculate earthwork quantities by comparing the original cross sections taken before construction to the cross sections taken during and after construction.

The Engineer will take measurements during construction to verify conformance to the required grade and cross sections. The Engineer will adjust quantities for the following:

1. Changes in design;
2. Engineer-authorized deviation from the established grade and cross section;
3. Changes in original ground topography after the original survey was made; or
4. Any changes required by the Engineer during construction, such as changing of cut or fill slopes and for excavation of peat, muck, marl, and underlying very soft clay.

B. **General.** The cost to build, maintain, remove, and restore borrow haul routes is included in the unit prices for other pay items.

The Engineer will measure removed topsoil and other select excavated materials from embankment areas as **Excavation, Earth**.

If the progress clause in the contract requires the Contractor to construct embankments during the seasonal suspension, the Department will pay for the frozen material removed and the embankment required to replace it at the unit price for **Excavation, Earth** and **Embankment**, of the type required. The Engineer will direct the grading limits during the seasonal suspension.

The Department will not pay for removing topsoil and frozen material to facilitate the Contractor's operations.

The unit prices for other pay items include the cost of compacting existing material in embankment and cut sections after removing topsoil.

The Department will pay for removal of masonry and concrete structures in accordance with section 204.

The Engineer will measure **Granular Material, Cl II** and **Granular Material, Cl III** in place. The Engineer will measure **Granular Material, Cl III**, required for constructing fills in water or constructing fills on poorly drained soil, as **Backfill, Swamp**.

The Engineer will measure **Underdrains, Bank** in accordance with subsection 404.04.

The cost of trimming the subgrade and slopes, to the required tolerances is included in the unit prices for other pay items.

The cost of restoring borrow and disposal areas is included in the unit prices for other pay items.

C. **Excavation, Rock**. The Engineer will measure **Excavation, Rock** by the staked-section method with no allowance for overbreak. The Department considers overbreak the material removed outside the area shown on the plans or Engineer-approved cross section for rock excavation.

The Engineer will not make deductions for rock projecting inside the lines of the cross section, within the limits required.

The Engineer will measure boulders greater than ½ cubic yard individually and will calculate the volume from average dimensions taken in three directions. The Department will pay for boulders, greater than ½ cubic yard, as **Excavation, Rock**.

The Engineer will measure removal of overburden as **Excavation, Earth**.

D. **Peat Excavation and Swamp Backfill**. The Engineer will measure total **Excavation, Peat** in its original position.

For the measurement of partial **Excavation, Peat** and displacement, the Engineer will include the volume of the peat excavated to form the trench, and the excavation of the upheaved peat in the trench. The Engineer will estimate the volume of upheaved peat, required for removal from the trench, at 100 percent of the actual peat displaced. The Department will not include peat, displaced outside the pay limits shown on the plans, in the pay quantity. The Engineer will take borings to determine the depth of displacement for calculating pay quantities.

The Department will pay for excavating peat, muck, marl, and underlying very soft clay as **Excavation, Peat**.

The unit price for **Excavation Peat**, includes the cost of re-handling waste material to facilitate displacement.

In the treatment of peat marshes, the Department will not allow claims for delays lasting less than 60 days caused by Department testing and determination of corrective methods. Perform

corrective work in areas requiring the total excavation method at no additional cost to the Department.

The Department and the Contractor will share equally, the costs for corrective work in areas where the partial peat excavation and displacement method is required or directed by the Engineer. Payment for the corrective work includes excavation and relief trenches. If the Engineer recommends placement of a temporary surcharge, the Department will pay for half the swamp backfill quantity required for the surcharge. The Department will pay for half the quantity of swamp backfill removed as **Excavation, Earth**, after the backfill stabilizes or the required settlement occurs.

If shown on the plans, the Department will pay for placement of temporary surcharge at the unit price for **Embankment, CIP** or **Backfill, Swamp**. The Department will pay for the removal of temporary surcharge at the unit price for **Excavation, Earth**.

The cost of maintaining a temporary surcharge, moved forward as the fill progresses, is included in the unit prices for other relevant pay items

The Engineer will measure **Backfill, Swamp** in its original position. To facilitate measurement, isolate an area in the borrow pit or roadway cut as the exclusive source of material for **Backfill, Swamp**. If the Engineer requires more than initial and final cross sections to measure and calculate the volume of material removed, pay the Department for additional cross sections and calculations.

If not practical to calculate the volume of **Backfill, Swamp** in its original position, the Engineer will calculate the volume within the limits shown on the plans, or from fill borings, and increase the volume by 15 percent. The Engineer will not increase the **Backfill, Swamp** volume by 15 percent if the peat excavation results in a dry hole.

The Engineer will not increase the volume of **Backfill, Swamp** by 15 percent if the material is used to construct sand core fills regardless of whether sand core fills are shown on the plans or directed by the Engineer.

E. **Subgrade Undercutting and Subgrade Manipulation.**

1. **Subgrade Undercutting.** The Engineer will measure **Subgrade Undercutting** in its original position. The Department will not make deductions in subgrade undercut quantities for areas where underdrain is installed.

   The Department will not adjust the unit price for changes to the quantity of the type of **Subgrade Undercutting** required.

   The unit price for **Subgrade Undercutting** of the type required includes the cost of removal and disposal of unsuitable material, and replacement with required material.

Payment for geotextile separator required for 4G backfill will be paid for according to subsection 308.04.

2. **Subgrade Manipulation.** The Engineer will measure **Subgrade Manipulation** only in designated areas shown on the plans or directed by the Engineer.

F. **Earth Excavation and Embankment.** The cost of stepping side slopes is included in the unit prices for the related roadway embankment pay items.

1. **Embankment, LM.** The Engineer will measure **Embankment, LM** by volume, loose measure. The unit price for **Embankment, LM** includes the cost of providing, hauling, placing, and compacting material at the required locations.

2. **Excavation, Earth and Embankment, CIP.** Payment for **Excavation, Earth** and **Embankment, CIP** will be based on subsection 205.04.A.

   The Engineer will not make allowances for increases in quantities of fill material required due to normal consolidation of the natural ground under the embankment. If the contractor disposes of surplus or unsuitable material outside the plan cross sections, the Engineer will not measure it as Embankment, CIP.

   If material is removed in embankment areas to a greater depth than required, the Department will only pay for the quantities of **Excavation, Earth**; **Embankment, CIP**; and **Embankment, Structure, CIP** as shown on the plans, or as calculated by average end area using the cross sections determined from the original elevations and the final elevations.

3. **Embankment, Structure, CIP.** The Engineer will measure **Embankment, Structure, CIP** based on the grade and cross section shown on the plans, using the staked-section method. The Engineer will not make allowance for increases in quantities of fill material required due to normal consolidation of the natural ground under the embankment.

   The Engineer will measure sound earth, if used as structure embankment under pile-supported footings, as **Embankment, CIP**.

G. **Machine Grading.** The Engineer will measure **Machine Grading** along the surface edge. The Engineer will measure each side of the road, where work is performed, separately.

H. **Ditch Cleanout.** The Engineer will measure **Ditch Cleanout** along the center line of the ditch. Restoration will be paid for separately in accordance with section 816.

I. **Granular Blanket.**

1. **Granular Blanket, Type 1.** The Engineer will measure **Granular Blanket, Type 1**, including the volume of granular material Class II, within the limits and to the depth shown on the plans or approved by the Engineer.

2. **Granular Blanket, Type 2**. The Engineer will measure **Granular Blanket, Type 2** in place, and include the volumes of the drainage layer and granular material Class II, within the limits and to the depth shown on the plans or approved by the Engineer.

J. **Channel Excavation.** The Engineer will measure **Excavation, Channel** by volume in its original position.

K. **Berm Grading.** The Engineer will measure **Berm Grading** along the shoulder edge. The Engineer will measure each side of the road, where work is performed, separately. The cost for berm grading under guardrail is included in this item. Grading under new or reconstructed guardrail is included in the unit price for the guardrail according to subsection 807.04.A.

Section 206. EXCAVATION AND BACKFILL FOR STRUCTURES

206.01. Description. This work consists of clearing, removing old structures or parts of structures, removing materials required for constructing structures, disposing of surplus or unsuitable material in accordance with subsection 205.03.P, and backfilling completed structures.

206.02. Materials. Provide materials in accordance with the following:

Sound Earth 205
Granular Material Class II 902
Aggregate, 6A 902
Geosynthetics 910

A. **Bridges, Pump Stations, Retaining Walls and Culverts (other than pipe).** Provide granular material Class II.

B. **Miscellaneous Structures.** Unless otherwise required, provide sound earth. Miscellaneous structures are structures other than bridges, pump stations, retaining walls, and culverts other than pipe.

206.03. Construction.

A. **Foundation Excavation, and Rock Foundation Excavation.** Excavate to allow for foundation unit construction. If shown on the plans or approved by the Engineer, trim the footing excavation to the exact size of the footing and omit the footing forms. For concrete placed on or against an excavated surface other than rock, do not disturb the bottom and side surfaces of the excavation before placing concrete. Excavate to the required grade immediately before concrete placement.

Before placing concrete, check the excavation depth and secure the Engineer's approval of the foundation support material. Place concrete in the absence of free-standing water. Change the elevations for the bottom of footings, as directed by the Engineer to ensure a stable foundation.

If directed by the Engineer, remove and replace unsound material under proposed structures, and replace with Department-approved material. Remove loose fragments, clean, and cut rock surface, or other hard material before placing concrete on required surface. Level, step, or serrate the surface, as directed by the Engineer.

1. **Foundation Excavation.** Excavate materials, including portions of the existing structures, within the foundation excavation limits, except rock foundation excavation.

2. **Rock Foundation Excavation.** Excavate in accordance with subsection 205.03.B.

B. **Backfill Placement and Compaction.** Place and compact backfill around completed structures.

1. **Placing Backfill.** Provide material for the type of structure requiring backfill in accordance with subsection 206.02.

   If soil, excavated from the site, meets material requirements the Contractor may use it to backfill around completed structures.

   Place backfill against the concrete structure after completion of the required curing, surface finishing, and waterproofing. Cover the inlet of each weep hole with geotextile blanket prior to placing backfill. Place backfill evenly around the structure to equalize horizontal loadings.

2. **Compacting Backfill.**

   a. **Bridges, Pump Stations, Retaining Walls and Culverts (other than pipe).** Place backfill material in 6-inch layers. Compact each layer to 100 percent of the maximum unit weight in the load bearing area. The load bearing area is the area within the 1:1 slope, down and away from the outer limits of the bottom of the footing to the bottom of the excavation.

      Place backfill behind and around substructure units, between the outer limits of the bottom of the footing and the surface elevation, in layers no greater than 12 inches deep. Compact backfill to at least 95 percent of the maximum unit weight.

      Place backfill between the bottom of footing elevation and the bottom of slope paving subbase, in layers no greater than 12 inches deep. Compact to at least 95 percent of the maximum unit weight.

   b. **Miscellaneous Structures.** For miscellaneous structures, place backfill in 12-inch layers, and compact to at least 95 percent of the maximum unit weight. The Engineer may approve an increase in the thickness of layers if the Contractor obtains the required compaction results.

206.04. Measurement and Payment.

Pay Item	**Pay Unit**
Excavation, Fdn	Cubic Yard
Excavation, Rock Fdn	Cubic Yard
Backfill, Structure, CIP	Cubic Yard
Backfill, Structure, LM	Cubic Yard
Aggregate, 6A	Cubic Yard

A. **Excavation.** The Department does not consider excavation to include removal of ice, water, or liquids. Unless otherwise required, the cost of sheeting, shoring, and dewatering is included in the unit prices for related structure excavation pay items.

1. **Excavation, Foundation.** The Engineer will base payment for **Excavation, Fdn** on plan quantity, in accordance with subsection 109.01.A. Unless otherwise shown on the plans, the Engineer will determine the plan quantities using the space bounded by the existing ground surface or exposed portions of the existing substructure, the elevation of the bottom of the foundation, and the 1:1 slopes extending outward and upward from points 18 inches outside the bottom of the footing.

   If not shown on the plans, the Department will pay for removal of piling below the bottom of footing elevations, encountered during structure excavation, as extra work.

2. **Excavation, Rock Foundation.** The Engineer will measure **Excavation, Rock Fdn** in its original position for the amount of rock excavated within vertical planes through the footing neat lines. The Engineer will make allowance for overbreak if the Engineer determines it is impractical to excavate to the neat lines of the footing. The Engineer will measure the amount of overbreak by actual cross sections of the footing excavation. Overbreak allowance is limited to vertical planes 6 inches outside and parallel to the neat lines of the footing, and to a depth of 3 inches below the elevation of the bottom of the footing, as shown on the plans.

   Rock foundation excavation does not include removal of portions of existing structures.

B. **Backfill.**

1. **Backfill, Structure, CIP.** The Engineer will base payment for **Backfill, Structure, CIP** on plan quantity, in accordance with subsection 109.01.A, regardless of the foundation excavation slope. The Engineer will not measure material placed outside the maximum pay limits shown on the plans.

   The Department will pay for granular material Class II used to backfill bridges, pump stations, retaining walls, and culverts other than pipe, as **Backfill, Structure, CIP**.

2. **Sound Earth.** The cost of sound earth used as backfill material for miscellaneous structures is included in the unit prices for related pay items.

3. **Aggregate, 6A.** The Engineer will measure **Aggregate, 6A** by volume, loose measure. The unit price for **Aggregate, 6A** includes the cost of providing, hauling, and placing material at locations directed by the Engineer.

Section 207. OBLITERATING ROADWAY

207.01. Description. This work consists of obliterating existing or temporary roadways, as required by the contract.

Obliterating roadway applies to those portions of the existing or temporary roadway, outside the limits of the new roadway.

207.02. Materials. None specified.

207.03. Construction. If an existing or temporary roadway is no longer needed for traffic, remove the HMA or concrete pavement and fill ditches and obliterate the roadway, using grading operations. Provide suitable drainage and blend the area with the surrounding ground contours.

Construct natural-appearing obstructions in the old roadway to prevent use by traffic. Break down and bury or remove old structures, in accordance with subsection 204.03. If required, scarify the obliterated roadway to mix aggregate surfacing materials with earth, and leave in a smooth condition.

Topsoil, seed, fertilize, and mulch obliterated areas in accordance with section 816.

If approved by the Engineer, the Contractor may obliterate the roadway by breaking the pavement to provide drainage and covering to at least 12 inches deep, with Department-approved material provided by the Contractor.

207.04. Measurement and Payment.

Pay Item	**Pay Unit**
Obliterate Old Road	Station, Acre

The Engineer will measure **Obliterate Old Road** along the centerline of the roadway requiring obliteration and outside the limits of the new roadway.

The Engineer will measure the removal of HMA surface as **HMA Surface, Rem** or **Pavt, Rem**, in accordance with subsection 501.04 or subsection 204.04, respectively, as appropriate. The Engineer will measure the removal of concrete pavement as **Pavt, Rem**, in accordance with subsection 204.04.

The Engineer will measure, and the Department will pay for seeding, fertilizer, topsoil surface, and mulch in accordance with section 816.

The Department will pay for materials, salvaged from the obliterated roadway and used in the construction of the new roadway, as approved by the Engineer, at the unit prices for the pay items.

Section 208. SOIL EROSION AND SEDIMENTATION CONTROL

208.01. Description. This work consists of installing and maintaining erosion and sedimentation controls to minimize soil erosion and control sediment from leaving the right-of-way and affecting water resources of the State of Michigan and adjacent properties. Complete this work in accordance with this section and the *Soil Erosion and Sedimentation Control (SESC) Manual*. The Department considers the terms “stabilization” and “erosion control measures” as defined in the *SESC Manual*.

Failure to install and maintain soil erosion controls may result in project shutdown, fines from the EGLE, or both. The Contractor is responsible for obtaining applicable federal, state, and local permits when disturbing areas outside Department right-of-way or outside Department acquired easement areas.

208.02. Materials. Provide materials in accordance with the following:

Coarse Aggregate, 6A	902
Granular Material Class II	902
Dense-Graded Aggregate, 21AA, 22A	902
Open-Graded Aggregate, 34R	902
Fencing Materials	907
Culvert Pipe	909
Geosynthetics	910
Cobblestone	916
Coarse Aggregate, 3×1	916
Riprap	916
Heavy Riprap	916
Sand and Stone Bags	916
Temporary Plastic Sheet	916
Turbidity Curtain	916

208.03. Construction.

A. **Area Limitations.** Conduct work to minimize soil erosion.

Limit the area of earth disturbance to 50 stations of dual roadways, or 100 stations of single roadway during clearing and grading. The Engineer may change the limits of exposed surface area based on the Contractor's ability to minimize erosion and prevent offsite sedimentation.

Do not disturb lands and waters outside the limits of earth disturbance, within the right-of-way, without prior approval from the Engineer. Restore Contractor-disturbed areas beyond the plan or Engineer-approved limits at no additional cost to the Department.

Obtain and give the Engineer copies of local, state, or federally required permits before disturbing sites outside the right-of-way, such as borrow, waste or disposal areas, haul roads, or storage sites. Provide temporary and permanent erosion and sedimentation controls in accordance with the permits.

B. **Time Limitations.** Bring grading sections to the final earth grade as soon as possible. Completion of the final earth grade does not include topsoil or other permanent restoration measures. The Engineer will consider the earth grade final and ready for placement of topsoil and permanent soil erosion control measures when the Contractor constructs a slope, channel, ditch, or other disturbed area in accordance with subsection 205.03.N. Complete topsoil placement and stabilize slopes, channels, ditches, and other disturbed areas within 5 calendar days after final earth grade with permanent soil erosion control measures. Permanently restore and place topsoil on slopes and ditches within 150 feet of lakes, streams, or wetlands within 24 hours of achieving final earth grade, using permanent soil erosion control measures. Do not prolong trimming, finishing final earth grade, or both, to permanently stabilize the project at one time.

C. **Construction and Maintenance of Erosion and Sedimentation Controls.** Construct temporary or permanent erosion and sedimentation controls in accordance with the *SESC Manual*, details shown on the plans, or as directed by the Engineer.

Maintain temporary erosion and sedimentation controls as necessary to ensure their effectiveness until permanent stabilization of the disturbed area has occurred. Dispose of sediment and debris removed from temporary sedimentation control devices in accordance with subsection 205.03.P

Maintain permanent erosion controls as necessary to ensure their effectiveness until project completion and acceptance. Repair damaged areas, replace lost devices, and remove sediment as required. Dispose of sediment and debris removed from permanent sedimentation control devices in accordance with subsection 205.03.P

1. **Check Dams.** Install, maintain, and remove check dams across ditches.

2. **Sediment Traps and Basins.** Excavate 5 cubic yards or less, for sediment traps, and greater than 5 cubic yards for sediment basins. Construct, maintain and fill sediment traps and basins.

   Prevent the excavated material from eroding into lakes, watercourses, or wetlands. Install required check dams downstream from a trap or basin before excavating the trap or basin.

3. **Filter Bag.** Provide, place and remove at least 225 square foot filter bags constructed of geotextile blanket. Pump water from the construction area into the filter bag to filter the water before it enters a watercourse. Install gravel filter berms on the downslope side of the filter bag for additional protection in sensitive areas, or where the Engineer determines the filter bag is not effectively removing the sediment. Place the filter bag in an upland vegetated area, on level ground, above, and as far as possible from watercourse banks. Use one pump

discharge hose per filter bag. Hose must be of appropriate size for the filter bag. Use multiple filter bags as necessary to ensure effective filtration. The Engineer must approve the location of the filter bag, before pumping begins. Replace or dispose of the filter bag and its contents when no longer effective or required. Dispose of filter bag and contents in accordance with subsection 205.03.P.

The Contractor may discharge silt-free, sediment-free water directly to a watercourse.

4. **Sand and Stone Bags.** Provide, place, maintain, remove, and dispose of sand or stone bags. Use non-contaminated sediment-free materials. The stone from stone bags may remain in place after the required period, if the bags are cut open and the stone spread evenly, as directed by the Engineer.

5. **Silt Fence.** Provide, install, maintain, remove, and dispose of silt fence, consisting of woven geotextile fabric stapled to, and supported by posts. Place material removed from trenching in the silt fence on the upslope side of the silt fence. In areas where water ponds behind the silt fence, provide a stone filter to channel away the water and prevent failure. Silt fence may remain in place after the required period, if directed by the Engineer.

6. **Gravel Filter Berm.** Provide, place, maintain, remove, and dispose of gravel filter berms consisting of coarse aggregate 6A or open-graded aggregate 34R. Do not use gravel filter berm in lieu of a check dam in a ditch.

7. **Inlet Protection, Fabric Drop.** Provide, place, maintain, and remove fabric drop inlet protection devices, as directed by the Engineer. Remove and dispose of accumulated sediment as necessary.

8. **Inlet Protection, Geotextile and Stone.** Provide, place, maintain, remove, and dispose of geotextile blanket, coarse aggregate 6A, or open-graded aggregate 34R, or both, for inlet protection. Remove and dispose of accumulated sediment as necessary.

9. **Inlet Protection, Sediment Trap.** Excavate, provide, maintain, remove, and dispose of sediment traps consisting of geotextile blanket, and coarse aggregate 6A, or open-graded aggregate 34R. Remove and dispose of accumulated sediment as necessary.

10. **Temporary Plastic Sheets or Geotextile Cover.** Provide, place, maintain, remove, and dispose of plastic sheets or geotextile cover. Secure temporary plastic sheets or geotextile cover as directed by the Engineer.

11. **Sand Fence.** Provide, maintain, remove, and dispose of fence to prevent sand from migrating onto roads.

12. **Aggregate Cover.** Provide, place, maintain, remove, and dispose of geotextile separator and dense-graded aggregate 21AA, coarse aggregate 3×1, coarse aggregate 6A or other Engineer-approved material.

13. **Gravel Access Approach.** Provide, place, maintain, remove, and dispose of geotextile separator and coarse aggregate 3×1 or other Engineer approved-material.

14. **Turbidity Curtain.** Provide, install, maintain, remove, and dispose of shallow or deep turbidity curtain.

    Use shallow turbidity curtain when the water is no greater than 2 feet deep. Use deep turbidity curtain when the water is greater than 2 feet deep.

    Provide a floating or staked turbidity curtain. During removal, minimize sediment loss.

15. **Intercepting Ditch.** Construct and maintain intercepting ditches. Remove ditches when no longer needed or as directed by the Engineer.

D. **Removal of Erosion and Sedimentation Control Facilities.** Remove or obliterate temporary erosion and sedimentation controls when the permanent controls are complete and approved, unless otherwise directed by the Engineer. Do not remove temporary controls next to lakes, watercourses, or wetlands until the establishment of turf on the adjacent slopes. Before placing topsoil, permanent seed, and fertilizer, remove or incorporate mulch, placed for temporary erosion control, into the slope. Minimize erosion and sedimentation into watercourses during removal of erosion controls. Repair damage caused during the removal of erosion controls at no additional cost to the Department.

208.04. Measurement and Payment.

Pay Item	Pay Unit
Erosion Control, Check Dam, Stone	Foot
Erosion Control, Sediment Trap	Each
Erosion Control, Sediment Basin	Cubic Yard
Erosion Control, Filter Bag	Each
Erosion Control, Sand Bag	Each
Erosion Control, Stone Bag	Each
Erosion Control, Silt Fence	Foot
Erosion Control, Gravel Filter Berm	Foot
Erosion Control, Inlet Protection, Fabric Drop	Each
Erosion Control, Inlet Protection, Geotextile and Stone	Each
Erosion Control, Inlet Protection, Sediment Trap	Each
Erosion Control, Temp Plastic Sheet/Geotextile Cover	Square Yard
Erosion Control, Sand Fence	Foot
Erosion Control, Aggregate Cover	Square Yard

Erosion Control, Gravel Access Approach ..... Each
Erosion Control, Maintenance, Sediment Rem…..... Cubic Yard
Erosion Control, Turbidity Curtain, Shallow ..... Foot
Erosion Control, Turbidity Curtain, Deep ..... Foot
Ditch, Intercepting..... Station

The Department will not pay for repairing or replacing temporary or permanent SESC measures damaged by the Contractor's negligence. The Department will pay for repairing or replacing temporary or permanent SESC measures damaged by causes other than the Contractor's negligence, at the contract unit price for the relevant pay items.

A. **Erosion Control, Check Dam, Stone.** The Engineer will measure **Erosion Control, Check Dam, Stone** in place. The unit price for **Erosion Control, Check Dam, Stone** includes the cost of providing, placing, maintaining, and removing the stone check dam.

B. **Erosion Control, Sediment Trap or Basin**.

1. **Erosion Control, Sediment Trap.** The unit price for **Erosion Control, Sediment Trap** includes the cost of excavating, constructing, maintaining, and removing sediment traps.

   The Department will pay separately for removing and disposing of accumulated sediment or debris from a sediment trap as **Erosion Control, Maintenance, Sediment Rem**.

2. **Erosion Control, Sediment Basin.** The Engineer will measure **Erosion Control, Sediment Basin** by volume, loose measure. The unit price for **Erosion Control, Sediment Basin** includes the cost of excavating, constructing, maintaining, and removing the sediment basin.

   The Department will pay separately for removing and disposing of accumulated sediment or debris from a sediment basin as **Erosion Control, Maintenance, Sediment Rem.**

C. **Erosion Control, Filter Bag.** The unit price for **Erosion Control, Filter Bag** includes the cost of providing, placing, maintaining, and disposing of the filter bag and its contents, and restoring the filter bag site.

The Department will pay separately for gravel filter berm used in conjunction with a filter bag as **Erosion Control, Gravel Filter Berm.**

D. **Erosion Control, Sand Bag and Erosion Control, Stone Bag.** The Engineer will measure **Erosion Control, Sand Bag** and **Erosion Control, Stone Bag** in place. The unit prices for **Erosion Control, Sand Bag** and **Erosion Control, Stone Bag** include the cost of providing, placing, maintaining, removing, and disposing of the sand or stone bags.

E. **Erosion Control, Silt Fence.** The Engineer will measure **Erosion Control, Silt Fence** in place excluding overlaps. The unit price for **Erosion Control, Silt Fence** includes the cost of providing, installing, maintaining, removing, and disposing of the fence and posts.

The Department will pay separately for removing and disposing of accumulated sediment or debris from behind silt fence as **Erosion Control, Maintenance, Sediment Rem**.

F. **Erosion Control, Gravel Filter Berm.** The Engineer will measure **Erosion Control, Gravel Filter Berm** in place. The unit price for **Erosion Control, Gravel Filter Berm** includes the cost of providing, placing, maintaining, removing, and disposing of the gravel filter berm.

G. **Erosion Control, Inlet Protection**.

1. **Erosion Control, Inlet Protection, Fabric Drop.** The unit price for **Erosion Control, Inlet Protection, Fabric Drop** includes the cost of constructing, maintaining, and removing inlet protection fabric drops.

2. **Erosion Control, Inlet Protection, Geotextile and Stone.** The unit price for **Erosion Control, Inlet Protection, Geotextile and Stone** includes the cost of constructing, maintaining, and removing geotextile and stone inlet protection.

3. **Erosion Control, Inlet Protection, Sediment Trap.** The unit price for **Erosion Control, Inlet Protection, Sediment Trap** includes the cost of excavating, constructing, maintaining, and removing sediment traps for inlet protection.

The Department will pay separately for removing and disposing of accumulated sediment or debris from a sediment trap inlet protection device as **Erosion Control, Maintenance, Sediment Rem**.

H. **Erosion Control, Temporary Plastic Sheet/Geotextile Cover.** The unit price for **Erosion Control, Temporary Plastic Sheet/Geotextile Cover** includes the cost of constructing, maintaining, and removing temporary plastic sheets and geotextile covers.

I. **Erosion Control, Sand Fence.** The Engineer will measure **Erosion Control, Sand Fence** in place. The unit price for **Erosion Control, Sand Fence** includes the cost of constructing, maintaining, and removing sand fence.

J. **Erosion Control, Aggregate Cover.** The unit price for **Erosion Control, Aggregate Cover** includes the cost of constructing, maintaining, and removing aggregate cover.

K. **Erosion Control, Gravel Access Approach.** The unit price for **Erosion Control, Gravel Access Approach** includes the cost of temporary culverts and ditching required to maintain existing drainage courses through or around gravel access approaches, and providing, constructing, maintaining, and removing gravel access approaches.

L. **Erosion Control, Maintenance, Sediment Rem.** The Engineer will measure **Erosion Control, Maintenance, Sediment Rem** by volume, loose measure. The unit price for **Erosion Control, Maintenance, Sediment Rem** includes the cost of removing sediment and debris from erosion and sedimentation control devices, as required by the *SESC Manual*, and as necessary to ensure their effectiveness.

M. **Erosion Control, Turbidity Curtain.** The Engineer will measure **Erosion Control, Turbidity Curtain, Shallow** and **Erosion Control, Turbidity Curtain, Deep** in place. The unit prices for **Erosion Control, Turbidity Curtain, Shallow** and **Erosion Control Turbidity Curtain, Deep** include the cost of providing, installing, maintaining, and removing turbidity curtains.

The unit price for **Erosion Control, Maintenance, Sediment Rem** includes the cost of removing and disposing of accumulated sediment or debris retained by the turbidity curtain.

N. **Intercepting Ditch.** The Engineer will measure **Ditch, Intercepting** in place along the ditch centerline. The unit price for **Ditch, Intercepting** includes the cost of constructing, maintaining, and removing the intercepting ditch.

Section 209. PROJECT CLEANUP

209.01. Description. This work consists of removing and disposing of debris; including fences, fallen timber, logs, guardrail sections and posts, rocks, boulders, and other rubbish from the Contractor's operations within the project limits in accordance with section 201 and section 205.

209.02. Materials. None specified.

209.03. Construction. Provide project cleanup as an ongoing operation. Perform project cleanup within the right-of-way, but over an area no greater than 50 feet beyond the limits of earth disturbance for the length of the project.

Fill holes and ruts, resulting from construction operations, with Department approved material. Compact and level filler materials and restore ruts and holes to the surrounding contour in accordance with section 816, or as directed by the Engineer.

Clean existing culverts, sewers, or drainage structures that contain sediment or debris from the construction operation.

209.04. Measurement and Payment.

Pay Item	**Pay Unit**
Project Cleanup	Lump Sum

The Department will pay for **Project Cleanup** upon completion of the cleanup operation. If the contract does not include a pay item for **Project Cleanup**, the Department will consider the cost of this work to be included in the contract unit prices for other relevant pay items.

DIVISION 3 – BASES

Section	Title	Page No.
301	Subbase	XX
302	Aggregate Base Course	XX
303	Open-Graded Drainage Courses	XX
304	Rubblizing Portland Cement Concrete Pavement	XX
305	HMA Base Crushing and Shaping	XX
306	Aggregate Surface Course and Maintenance Gravel	XX
307	Aggregate Shoulders and Approaches	XX
308	Geosynthetics for Base	XX

NOTES

Section 301. SUBBASE

301.01. Description. This work consists of constructing a granular subbase on a surface approved by the Engineer.

301.02. Materials. Provide material in accordance with the following:

Granular Material Class II 902

301.03. Construction. Spread the subbase material evenly and compact to at least 95 percent of the maximum unit weight, at a less-than-optimum moisture content, for its entire thickness. Place the subbase in layers no greater than 18 inches. Where the required depth is more than 18 inches, place the material in layers of equal thickness. Construct the subbase to plan grade within a tolerance of plus 1 inch.

Do not place subbase on frozen, soft, unstable, or rutted subgrade. If subbase material becomes mixed with subgrade material, remove, dispose of, and replace the subbase material at no additional cost to the Department.

301.04. Measurement and Payment.

Pay Item	**Pay Unit**
Subbase, LM	Cubic Yard
Subbase, CIP	Cubic Yard

A. **Subbase, LM.** The Engineer will measure **Subbase, LM** based on hauling unit dimensions and load count before placement and compaction. The unit price for **Subbase, LM** includes the cost of providing, hauling, placing, compacting, and grading the material.

B. **Subbase, CIP.** The Engineer will measure **Subbase, CIP** by the staked-section method as described in subsection 205.04. The unit price for **Subbase, CIP** includes the cost of providing, hauling, placing, compacting and grading the material.

Section 302. AGGREGATE BASE COURSE

302.01. Description. This work consists of constructing an aggregate base course on a surface approved by the Engineer.

302.02. Materials. Provide materials in accordance with the following:

Dense-Graded Aggregate 21AA, 21A, 22A 902

Provide aggregate meeting the aggregate series shown on the plans.

302.03. Construction.

A. **Placing and Compacting.** Provide a ticket with each load, stating the following information:

1. Project number;
2. Aggregate source;
3. Aggregate series;
4. Date;
5. Time;
6. Truck identifier number;
7. Supplier name; and
8. Type of aggregate approval.

If the contract requires payment by weight, ensure the ticket includes the gross weight, tare weight, and net weight to the nearest 100 pounds. Determine the truck tare weight at least once daily.

If the contract does not require payment by weight, the Engineer may accept written documentation in lieu of tickets. Written documentation must identify the pay item of the material and include all information listed above except time and truck identifier number.

Provide and place aggregate with a uniform gradation, free of contamination and segregation. Do not place aggregate base on frozen, soft, unstable or rutted subgrade, subbase, or aggregate base. Do not rut or distort the subbase material or aggregate base during spreading.

The Contractor may use additives to facilitate compaction, shaping, and maintenance of the aggregate surface.

Compact the aggregate layers to a uniform thickness, no less than 3 inches and no greater than 8 inches. If placing aggregate base in a layer less than 3 inches, blend the new material with the layer below to ensure a total of 6 inches. Blending must be performed to ensure that the new material is uniformly mixed with the layer below. Compact each layer of aggregate base to at least 98 percent of the maximum unit weight at a moisture content no greater than optimum for

aggregate base under hot mix asphalt pavement. Compact each layer of aggregate base to at least 95 percent of the maximum unit weight at a moisture content no greater than optimum for aggregate base under concrete pavement. Within the limits of bridge approaches, from the abutment wall to the typical roadway cross-section, compact each layer of the aggregate base to at least 98 percent of the maximum unit weight. Shape the finished surface and the layer thickness to within ±½ inch of the crown and grade shown on the plans.

Remove, dispose of, and replace aggregate base material that mixes with subbase or subgrade material, at no additional cost to the Department.

B. **Conditioning Aggregate Base.** Shape the finished surface of the existing aggregate base course to within ±½ inch of the grade and cross section shown on the plans. Provide additional aggregate to address irregularities and obtain the required grade or cross section.

If placing aggregate base in a layer less than 3 inches, blend the new material with the layer below to ensure a total of 6 inches. Blending must be performed to ensure that the new material is uniformly mixed with the layer below and compact as specified in subsection 302.03.A.

C. **Maintenance During Construction.** Maintain the aggregate base course layer at the required line, grade, and cross section until placement of the next layer. Ensure the exposed aggregate base course layer remains smooth, compacted, and uncontaminated.

If the subgrade, subbase, or aggregate base is damaged due to the Contractor's operations or construction traffic, restore to the required condition at no additional cost to the Department.

D. **Surplus Existing Aggregate Base Material.** Surplus existing aggregate base material meeting the material requirements of this section may be used instead of providing new aggregate base material. Remove and dispose of surplus aggregate base material, not being used elsewhere on the project, and unsuitable material in accordance with subsection 205.03.P.

302.04. Measurement and Payment.

Pay Item	**Pay Unit**
Aggregate Base	Ton
Aggregate Base, LM	Cubic Yard
Aggregate Base, __ inch	Square Yard
Aggregate Base, Conditioning	Station, Square Yard
Aggregate Base, Conditioning, Surplus and Unsuitable, Rem, LM	Cubic Yard
Salv Aggregate Base, Conditioning, LM	Cubic Yard

A. **Aggregate Base.** The Engineer will determine the moisture content and pay weights in accordance with section 109.

The Engineer will measure **Aggregate Base** by the scale weight of the material, including admixtures, and moisture content no greater than 8 percent.

The Engineer will perform moisture tests at the start of weighing operations and if construction operations, weather conditions, or other causes may change the moisture content of the material. If tests indicate a moisture content greater than 8 percent, the Engineer will deduct the weight of the excess moisture from the scale weight of the aggregate until moisture tests indicate the moisture content is no greater than 8 percent.

B. **Aggregate Base, LM.** The Engineer will measure **Aggregate Base, LM** based on hauling unit dimensions and load count, before placement and compaction. The unit price for **Aggregate Base, LM** includes the cost of providing, hauling, placing, compacting and grading the material, and providing water for compaction.

C. **Aggregate Base, __ inch.** The Engineer will measure **Aggregate Base, __ inch** by width and length, for the specified depth, as shown on the plans.

D. **Aggregate Base, Conditioning.** If the contract requires payment for **Aggregate Base, Conditioning** in station pay units, the Engineer will measure along the alignment of the roadway.

If the contract requires payment for **Aggregate Base, Conditioning** in area pay units, the Engineer will measure by the width and length shown on the plans.

If the contract does not include the pay item **Aggregate Base, Conditioning**, the Department will consider the cost of conditioning aggregate base and providing additives and water for compaction and maintenance, to be included in other aggregate base pay items.

E. **Aggregate Base, Conditioning, Surplus and Unsuitable, Rem, LM.** The Department will only pay for **Aggregate Base, Conditioning, Surplus and Unsuitable, Rem, LM** if the Contractor removes material from the project site and disposes in accordance with subsection 205.03.P.

F. **Salv Aggregate Base, Conditioning, LM.** The Department will only pay for **Salv Aggregate Base, Conditioning, LM** for use in other areas of the project if existing aggregate base material requires loading and hauling. The Engineer will measure, and the Department will pay for surplus material loaded and hauled from locations on the project to attain the plan grade or cross section, in the final location as **Salv Aggregate Base, Conditioning, LM**.

Section 303. OPEN-GRADED DRAINAGE COURSES

303.01. Description. This work consists of constructing an open-graded drainage course (OGDC) on a surface approved by the Engineer.

303.02. Materials. Provide materials in accordance with the following:

Open-Graded Aggregate 4G 902

303.03. Construction.

A**. Preparation.** Provide and install the separation treatment, as specified on the plans, between the OGDC and the subbase or subgrade.

B. **Placement and Compaction.** Provide a ticket with each load, stating the following information:

1. Project number;
2. Aggregate source;
3. Aggregate series;
4. Date;
5. Time;
6. Truck identifier number;
7. Supplier name; and
8. Type of aggregate approval.

If the contract requires payment by weight, ensure the ticket includes gross weight, tare weight, and net weight to the nearest 100 pounds. Determine the truck tare weight at least once daily.

If the contract does not require payment by weight, the Engineer may accept written documentation instead of tickets. Written documentation must identify the pay item of the material and include all information listed above except time and truck identifier number.

Place OGDC in accordance with subsection 302.03. When additional thickness is being used for equipment travel, the layer must not exceed 10 inches. Provide a finished surface, smooth and uniform in appearance that is free of loose aggregate, holes, depressions, ruts and ridges. Do not place OGDC on frozen, soft, unstable, or rutted subgrade, subbase, or aggregate base. Do not rut or distort the underlying layer during spreading.

1. **Control Strip.** Construct a control strip with length ranging between 600 feet and 1000 feet at the start of the spreading operation to establish a construction method for placement and compaction that does not cause degradation or segregation detrimental to base stability and drainability. The Engineer will obtain an in-place sample from the control strip after compaction and final trimming and test for loss by washing (LBW) and gradation (Table 902-1). In addition, the density will be verified to meet the minimum 95 percent of the maximum

unit weight with the moisture content not greater than optimum. Do not place OGDC beyond the limits of the control strip until an acceptable placement method is determined and verified by test results. When contiguous plan quantities are less than 10,000 square yards, the Engineer may waive the control strip requirement, but the minimum density requirement will still apply.

C. **Equipment Travel.** Place at least 2 inches more than the finished thickness of the OGDC layer on the grade, prior to use for equipment travel. All costs associated with placement of the additional aggregate and removal or trimming thereof will be borne by the Contractor. Stockpile and retest any removed OGDC aggregate to verify the aggregate meets the grading requirements in Table 902-1 for the intended item of use on this or any Department project.

Where no lateral space exists due to permanent physical obstructions, maintaining traffic requirements or other unavoidable conditions, delivery of material to the paver by equipment traveling on the OGDC will be permitted provided that:

1. The specified in-place OGDC gradation is maintained and no other damage to the OGDC, subbase or subgrade occurs; and
2. Varied truck routes or paths are used to minimize the potential for damage to the OGDC.

Correct all observed damage to the OGDC layer, subbase or subgrade resulting from equipment travel, according to subsection 303.03.B. Protect the underdrain system from damage at all times and locations.

D. **Testing and Acceptance.** The Engineer will determine the preferred sampling location and provide a written description to the Contractor at the pre-construction meeting and at the pre-bid meeting, if applicable. The Engineer may designate a revised preferred sampling location if circumstances change during construction. Provide mechanical methods to assist the Engineer in obtaining samples from the grade when layer thicknesses are greater than 4 inches.

Make allowance for and be solely responsible for degradation and segregation during shipment, placement and compaction of the OGDC material.

1. **Daily Verification.** The Engineer will verify compactive effort or stability by one of the following options:

    a. **Proof Roll.** Complete a proof roll using equipment approved by the Engineer. The Engineer must witness and document the proof roll and will determine the proper course of action to correct any observed rutting or displacement.
    b. **Control Density Testing.** Perform in-place density control testing to verify at least 95 percent of the maximum unit weight with the moisture content not greater than optimum has been achieved for each individual layer.

The Engineer may approve modifications to the construction method established during the control strip if the in-place gradation is not compromised and the compactive effort or stability can be verified.

If the Engineer waives the control strip, in-place field testing is required to verify placement and compaction methods are achieving at least 95 percent of the maximum unit weight with the moisture content not greater than optimum for each individual layer. In-place testing frequency will be the same as listed for Aggregate Base Courses in the *Density Testing and Inspection Manual*.

2. **Notification Requirements.** Notify the Engineer if any of the following occur, and construct a new 600 foot to 1000 foot long control strip:

   a. Changes in placement procedures including layer thickness;
   b. Equipment used in the placement of the previous control strip is removed from service or replaced; or
   c. A switch in the material source or blending of multiple sources.

The new control strip must be tested and approved by the Engineer prior to the resumption of OGDC placement.

3. **Prior to Placement Acceptance Criteria.** Material not meeting the requirements in Table 902-1, will not be permitted to be placed on the grade.

4. **Compacted In-Place Acceptance Criteria.** The Engineer may sample and test the compacted in-place OGDC for final acceptance. If segregation, contamination, or excessive degradation is observed, the Engineer will provide written notification of the need for in-place testing. The notification will also define the limits of the area subject to testing, not to exceed 500 feet in length for each occurrence. Discontinue OGDC placement upon receipt of the notification. Stop the paving operation at least 500 feet before the OGDC area subject to in-place acceptance testing. Do not resume OGDC placement and paving operations until directed by the Engineer. The Engineer may require constructing and testing another 600 foot to 1000 foot long control strip constructed in accordance with subsection 303.03.B.1. The Engineer will sample from within the defined area. Two additional samples will be obtained, one from each adjacent side of the defined area for in-place acceptance testing. Each test area will have a maximum length of 500 feet. All three acceptance tests will be completed within 48 hours of the time the samples were obtained from the project.

The in-place aggregate gradation for any test area, including control strips, must conform to the grading requirement in Table 902-1. Test results outside these gradation limits will be subject to pay adjustment or be required to be removed and replaced in accordance with subsection 303.04.

303.04. Measurement and Payment.

Pay Item	Pay Unit

Open-Graded Dr Cse, __ inch .....Square Yard
Open-Graded Dr Cse, CIP ..... Cubic Yard
Open-Graded Dr Cse, Shld .....Square Yard, Ton

A. **General.** The unit prices for the open-graded drainage course pay items include furnishing the crushed aggregate, placing, spreading, shaping, compacting, trimming, protecting the underdrain system and all costs associated with constructing control strips, corrective actions necessary to rectify degradation and segregation. The open-graded drainage course pay items are subject to the pay adjustments described herein.

B. **Open-Graded Dr Cse, __ inch**. The Engineer will measure **Open-Graded Dr Cse, __ inch** by width and length, for the specified depth, as shown on the plans.

C. **Open-Graded Dr Cse, CIP**. The Engineer will measure **Open-Graded Dr Cse, CIP** based on plan quantity by volume in cubic yards. The plan quantity will include all the OGDC below the paved shoulder and median to the top of the proposed subbase, as defined by the plan typical sections. If the Engineer determines that it is not feasible to determine quantities based on plan quantities, measurement for **Open-Graded Dr Cse, CIP** will be based on the staked-section method as described for roadway earthwork volumes in subsection 205.04.A

D. **Open-Graded Dr Cse, Shld.** The Engineer will determine the moisture content and pay weights as specified in section 109.

If the contract requires weight measurement, the Engineer will measure **Open-Graded Dr Cse, Shld** by the scale weight, including additives, at a moisture content no greater than 8 percent. The Engineer will perform moisture tests at the start of weighing operations and when construction operations, weather conditions, or other causes may change the moisture content of the material. If tests indicate a moisture content greater than 8 percent, the Engineer will deduct the weight of the excess moisture from the scale weight of the aggregate until moisture tests indicate the moisture content is no greater than 8 percent.

If the contract requires area measurement, the Engineer will measure **Open-Graded Dr Cse, Shld** by width and length as shown on the plans.

E. **Pay Adjustment Computation.** Pay adjustments are not cumulative; only the largest of the computed sieve or loss by washing pay adjustments will be applied. All pay adjustments are negative. Pay adjustments are computed using the following formula:

$$Pay\ Adjustment\ =\ Pay\ Factor\ Reduction\ \times\ (quantity)\ \times\ (base\ price)$$ Formula 303-1

Where:

$Pay\ Factor\ Reduction$ = Value shown in Table 303-1 or 303-2 as applicable (expressed as a decimal)

$quantity$ = Quantity subject to adjustment
$base\ price$ = Unit price established by the Department and shown in the contract.

Apply computed pay adjustments using Tables 303-1 and 303-2 for material tested in-place according to subsection 303.03.D.4.

Table 303-1 **Pay Factor Reduction for In-Place OGDC Exceeding Gradation Requirements on Any Sieve (Excludes LBW)**	
Amount Exceeding Gradation Limit (%) (a)	**Pay Factor Reduction (%)**
1	0
2 - 3	10
4 - 6	30
> 6	(b)
a. As shown in Table 902-1. b. The Engineer will either require removal and replacement of the material or will apply a 50% pay factor to the material.	

Table 303-2 **Pay Factor Reduction for In-Place OGDC Exceeding Loss by Washing Requirements**	
Amount Exceeding Gradation Limit (%) (a)	**Pay Factor Reduction (%)**
<0.5	0
0.5 - 1.0	20
>1.0 - 1.5	30
>1.5 - 2.0	40
>2.0	(b)
a. As shown in Table 902-1. b. Removal and replacement of the material is required.	

Section 304. RUBBLIZING PORTLAND CEMENT CONCRETE PAVEMENT

304.01. Description. This work consists of preparing, shattering, compacting reinforced or non-reinforced portland cement concrete (PCC) pavement to provide a rubblized base, and disposing of surplus and deleterious material in accordance with subsection 205.03.P.

304.02. Materials. Provide material in accordance with the following:

Dense-Graded Aggregate 21AA 902

304.03. Construction.

A. **Equipment.** Use a water sprinkling system to suppress dust generated from pavement shattering operations.

For rubblizing pavement, use one of the following types of self-contained, self-propelled pavement breaking equipment:

1. Resonant frequency equipment producing a low amplitude breaking force; or
2. Multiple impact hammer equipment, capable of lifting and falling in an independent, adjustable, random sequence with variable force of impact.

If using impact hammer equipment, the number and spacing of hammers may vary. Ensure the weights of individual hammers do not destroy the integrity of layers within 24 inches of the bottom of the rubblized pavement.

B. **Preparation Work.** Before beginning pavement rubblizing, complete all of the following:

1. Saw cut a relief joint full depth where rubblizing abuts concrete pavement required to remain or will be rubblized in a later stage.
2. Construct the pavement widening or shoulders to match the elevation of the adjacent pavement requiring rubblizing
3. Complete construction of drainage systems for the new pavement structures, including outlet endings. Backfill and compact to the existing grade to prevent damage to the drainage system.
4. Remove pavement shown on the plans or directed by the Engineer, over utilities or pipes with less than 18 inches of granular material cover, as measured from the bottom of the pavement to the top of the utility or pipe. Extend the limits for pavement removal 3 feet beyond each side of utility or pipe. Backfill the removal area with filler aggregate, in layers no greater than 6 inches, and compact as approved by the Engineer.

Do not remove patching material before rubblizing.

C. **Quality Control Checks.** Perform all of the following field checks and provide same day documentation of field checks to the Engineer:

1. At the start and during rubblizing operations, establish, demonstrate, and document equipment capabilities, including the speed and impact frequency.
2. At least once per lane, and every 1,500 feet, as determined by the Engineer, inspect the rubblized pavement to determine if the rubblizing operation has de-bonded the reinforcement from the concrete and is achieving the particle size specified in subsection 304.03.F. as follows:

    a. Mechanically excavate an area of 25 square feet through the full depth of the pavement, taking care not to further rubblize. Notify the Engineer at least 2 hours before excavation to allow verification of results for acceptance.
    b. If the Engineer directs, perform spot inspections to the top of reinforcement, using manual methods instead of mechanical methods. These inspections may be at the locations listed above or at additional locations chosen by the Engineer. Use a shovel or pick to excavate an area of 25 square feet. Use a geologist pick or mason hammer to separate the concrete pieces above the reinforcing mat. Remove as much material as possible and clean the remaining surface with a stiff-bristled broom or brush to expose the reinforcing mat. The Department considers the mat de-bonded if at least 80 percent of the mat is visible after excavation and sweeping.
    c. If performing inspection using manual methods, sound concrete below the reinforcing mat to determine if material is fractured.
    d. Restore inspection sites with filler aggregate and compact. The Engineer may adjust the inspection frequency.

3. Ensure the completed rubblized surface has a uniform appearance with no unbroken strips of pavement, exposed reinforcement, or visible joint filler and asphalt patching material.

D. **Compaction.** Before placing the HMA mixture, compact the rubblized pavement with vibratory steel-wheeled and pneumatic-tired rollers in the following sequence:

1. At least two passes with a Z-grid vibratory roller, or steel drum roller, as approved by the Engineer;
2. A third pass, and subsequent passes, with a pneumatic-tired or steel drum roller; and
3. A final pass just before HMA placement with a steel drum roller.

The Department considers a pass, down and back in the same path.

Provide rollers with a nominal gross weight of at least 10 ton. Operate vibratory rollers in a high vibration mode and at a speed no greater than 6 feet per second, unless otherwise limited by the condition of the base, subbase, subgrade, or drainage features.

The Contractor may apply water if the Engineer approves.

After compaction and before placing HMA, ensure the finished surface varies no more than ±1 inch, when tested with a 10-foot straightedge. Fill voids and depressions with filler aggregate and compact.

E. **Miscellaneous.** Do not allow vehicular traffic on the rubblized pavement before HMA placement, unless otherwise required for construction and maintenance of traffic, as approved by the Engineer. Maintain the compaction of portions of the rubblized pavement, with no exposed reinforcement, for crossroad or ramp traffic.

In part-width construction areas, rubblize the pavement to the limits of the required overlay for that stage. Saw cut the longitudinal joint deep enough to cut the tie bar, unless rubblizing in a prior stage extends beyond the centerline and past the tie bar.

Do not damage items required to remain, including drainage structures and monument boxes.

F. **Acceptance Criteria.** The Engineer will observe quality control checks described in subsection 304.03.C and base acceptance on the following criteria:

1. PCC pavement shattered to full-depth;
2. Non-reinforced PCC pavement and concrete pavement patches reduced to unbound particles with diameter less than 10 inches;
3. Reinforced PCC pavement and concrete pavement patches, above the reinforcement, reduced to unbound particles with a nominal diameter from 2 inches to 6 inches;
4. Reinforced PCC pavement and concrete pavement patches, below reinforcement, exhibit sporadic particles greater than 10 inches, provided the Engineer verifies de-bonding of reinforcement near the particle;
5. No oversized particles at the surface for PCC pavements;
6. De-bonding of reinforced pavement achieved, if the required particle size is met;
7. Exposed reinforcement has been cut off below the surface and removed. Embedded reinforcement may remain in place;
8. No visible joint sealant or asphalt patching material on the compacted surface and voids filled with filler aggregate;
9. Joints, and cracks greater than ¼ inch wide at the surface are not distinguishable; and
10. No displacement of underlying base, subgrade, or underdrains.

304.04. Measurement and Payment.

Pay Item	**Pay Unit**
Pavt, Rubblize	Square Yard
Aggregate, Filler	Ton
Saw Cut, Rubblize	Foot

A. **Pavt, Rubblize.** The unit price for **Pavt, Rubblize** includes the cost of the following:

1. Required quality control work;
2. Rubblizing;
3. Dust suppression, including water;
4. Removing joint fillers;
5. Cutting exposed steel, loading, hauling, and disposing of the steel and immediate restoration of disturbed rubblized concrete;
6. Breaking down or removing and disposing of oversized pavement pieces;
7. Disposing of material removed from inspection areas; and
8. Maintaining the condition of the rubblized pavement until placement of the HMA pavement.

B. **Aggregate, Filler.** The unit price for **Aggregate, Filler** includes the cost of producing, delivering, placing, leveling, and compacting the aggregate in rubblized pavement.

C. **Saw Cut, Rubblize.** The unit price for **Saw Cut, Rubblize** includes the cost of cutting a relief joint full depth where the rubblizing abuts concrete pavement, required to remain, or removed for other purposes, and cutting the longitudinal joint through the tie bars where necessary.

The Department will pay for concrete pavement removal separately as **Pavt, Rem**, in accordance with section 204.

Section 305. HMA BASE CRUSHING AND SHAPING

305.01. Description. This work consists of constructing an aggregate base from existing flexible pavement.

305.02. Materials. Provide material in accordance with the following:

Dense-Graded Aggregate 21A, 21AA, 22A 902

305.03. Construction. Crush and shape Hot Mix Asphalt (HMA) to the depth and width shown on the plans. The plans will also show construction staging and shoulder treatment. Obtain the Engineer's approval for the initial surfacing course HMA mix design before crushing begins.

A. **Equipment.** Provide a self-propelled rotary reduction crushing machine capable of crushing the pavement to the size required by the contract and mixing the crushed material with the underlying aggregate base to the required depth.

Use a water sprinkling system to suppress dust generated from pavement crushing operations.

Provide final grading equipment that includes automatic cross slope and crown control. If no plan grades are provided, provide an automated system for referencing and averaging of existing surface for longitudinal control.

B. **Crushing and Shaping.** Unless otherwise approved by the Engineer, crush, shape, compact and grade the first side of the roadway to the referenced grade prior to crushing and shaping the second side.

Reference the longitudinal crushed grade from the existing pavement surface or the new HMA pavement surface for the second side.

The Contractor may blade the existing shoulder asphalt or seal coat material onto the mainline pavement before crushing.

Uniformly crush existing asphalt pavement, including 1 inch to 2 inches of the aggregate base, to the required width and depth. Ensure 95 percent of the crushed material has a maximum particle size of 1½ inches, and the remaining 5 percent contains no particles larger than 4 inches.

Uniformly spread and compact the crushed material to the dimensions shown on the plans. Use salvaged crushed material, if available, or dense-graded aggregate to add material to attain the plan grade or cross section. Spread added aggregate uniformly before crushing or place aggregate on the crushed surface and remix to the full crushed depth.

C. **Compacting and Grading.** Compact the crushed material to at least 98 percent of the maximum unit weight. The maximum unit weight is to be determined on a representative sample of material that has a moisture content short of saturation, and a maximum top size of 1 inch.

Repair base destabilized by over watering or non-uniform water application, damaged by Contractor operations, or from maintaining traffic, at no additional cost to the Department.

D. **Surplus Crushed Material.** The Contractor may use surplus crushed material as aggregate base or aggregate shoulder.

E. **Weather Limitations.** Do not crush HMA pavement if anticipated precipitation may destabilize the prepared base. Crush and shape HMA base in accordance with the weather limitations specified in section 501.

F. **Acceptance Criteria.** The Engineer will inspect crushing and shaping work and base acceptance on all of the following criteria:

1. Crushed material meets particle size requirements;
2. After final grading, the surface does not vary by more than ½ inch, when tested with a 10-foot straightedge;
3. Immediately before paving, undulations or variations are corrected to meet the criteria in subsection 305.03.B and subsection 305.03.C; and
4. Required density is maintained until the HMA surface material application.

305.04. Measurement and Payment.

Pay Item	**Pay Unit**
HMA Base Crushing and Shaping	Square Yard
Salv Crushed Material, LM	Cubic Yard
Material, Surplus and Unsuitable, Rem, LM	Cubic Yard

A. **HMA Base Crushing and Shaping.** The Engineer will base payment for **HMA Base Crushing and Shaping** on the width of the proposed HMA surface, in accordance with subsection 109.01.A, unless otherwise shown on the plans, regardless of any variation in depth.

The unit price for **HMA Base Crushing and Shaping** includes the cost of water to obtain the required density, and scarifying, crushing, grading, shaping, rolling, and compacting existing HMA.

B. **Salv Crushed Material, LM.** The Department will only pay for **Salv Crushed Material, LM** for use in other items of work if surplus crushed material requires loading and hauling.

The Engineer will measure, and the Department will pay for surplus material loaded and hauled from locations on the project to attain the plan grade or cross section, in the final location as **Salv Crushed Material, LM** or as shoulder or approach in accordance with subsection 307.04.

C. **Material, Surplus and Unsuitable, Rem, LM.** The Department will only pay for **Material, Surplus and Unsuitable, Rem, LM** if the Contractor removes material from the project site and disposes in accordance with subsection 205.03.P.

D. **Trenching.** The Department will pay separately for **Trenching**, in accordance with subsection 307.04.

E. **Aggregate.** The Department will pay separately for additional aggregate as **Aggregate Base**, in accordance with subsection 302.04. If **Aggregate Base** is not included in the contract, the Department will pay for additional aggregate as extra work.

Section 306. AGGREGATE SURFACE COURSE AND MAINTENANCE GRAVEL

306.01. Description. This work consists of constructing aggregate surface course on a prepared subgrade or existing aggregate surface.

306.02. Materials. Provide materials in accordance with the following:

Dense-Graded Aggregate 21A, 21AA, 22A, 23A, 23AA 902
Salvaged Aggregate..... 902

Provide Dense-Graded Aggregate 21A, 21AA, or 22A if the plans show aggregate surface course later receiving a paved surface. Provide Dense-Graded Aggregate 23A or 23AA if the plans show construction of aggregate surface without a paved surface. Provide Dense-Graded Aggregate 21A, 21AA, 22A, 23A, 23AA, or salvaged aggregate for temporary maintenance gravel.

306.03. Construction.

A. **Preparation of Base.** When required, blade, or scarify and blade, existing aggregate surfaces to remove irregularities in the grade.

B. **Placing and Compacting.** Provide a ticket with each load, stating the following information:

1. Project number,
2. Aggregate source,
3. Aggregate series,
4. Date,
5. Time,
6. Truck identifier number,
7. Supplier name, and
8. Type of aggregate approval.

If the contract requires payment by weight, ensure the ticket includes gross weight, tare weight, and net weight to the nearest 100 pounds. Determine the truck tare weight at least once daily.

If the contract does not require payment by weight, the Engineer may accept written documentation in lieu of tickets. Written documentation must identify the pay item of the material and include all information listed above except time and truck identifier number.

Provide a uniform aggregate mixture, compacted in place to a uniform density full depth. Provide a complete surface course to the line, grade, or cross section shown on the plans.

Place maintenance gravel at driveway and intersection locations shown on the plans or as directed by the Engineer to provide a flush transition to driveways, intersecting cross streets, and adjacent surfaces where maintaining traffic. Grade maintenance gravel to provide positive

drainage. Match the existing widths of the driveways and intersections as shown on the plans or as directed by the Engineer.

When construction operations progress to a point that maintenance gravel is no longer needed, as determined by the Engineer, remove the maintenance gravel on the same workday as paving of the removal area. Remove and dispose of maintenance gravel in accordance with the standard specifications. If approved by the Engineer, the Contractor may leave maintenance gravel in place as part of the work.

Do not place aggregate on unstable surfaces, as determined by the Engineer. Maintain the aggregate in a smooth and stable condition until removed, surfaced, or project completion.

Compact the aggregate layers to a uniform thickness, no greater than 8 inches. If placing HMA surface over the aggregate surface course, compact each aggregate layer to at least 98 percent of the maximum unit weight at a moisture content no greater than optimum. For other aggregate surface course applications, compact each layer of aggregate to at least 95 percent of the maximum unit weight, at a moisture content no greater than optimum.

Grade the finished surface and layers to within ±½ inch of the crown and grade shown on the plans.

If placing aggregate base in a layer no greater than 3 inches, compact using pneumatic-tired rollers or vibratory compactors to at least 95 percent of the maximum unit weight at a moisture content no greater than optimum.

C. **Use of Additives.** The Contractor may use additives to facilitate compaction and for dust control.

306.04. Measurement and Payment.

Pay Item	**Pay Unit**
Aggregate Surface Cse, __ inch	Square Yard
Aggregate Surface Cse	Cubic Yard, Ton
Maintenance Gravel, LM	Cubic Yard
Maintenance Gravel	Ton
Driveway Maintenance, Commercial	Each
Driveway Maintenance, Residential	Each
Intersection Maintenance	Each

A. **Aggregate Surface Course.** The Engineer will measure **Aggregate Surface Cse, __ inch** by the width and length shown on the plans.

The Engineer will determine the moisture content and pay weights as specified in section 109.

If the contract requires weight measurement, the Engineer will measure **Aggregate Surface Cse** by the scale weight, including additives, at a moisture content no greater than 8 percent.

The Engineer will perform moisture tests at the start of weighing operations and when construction operations, weather conditions, or other causes may change the moisture content of the material. If tests indicate a moisture content greater than 8 percent, the Engineer will deduct the weight of the excess moisture from the scale weight of the aggregate until moisture tests indicate the moisture content is no greater than 8 percent.

The unit price for **Aggregate Surface Cse, __ inch** and **Aggregate Surface Cse**, includes the cost of additives and water.

B. **Maintenance Gravel.** The Engineer will measure **Maintenance Gravel, LM** based on hauling unit dimensions and load count, before placement and compaction. The unit price for **Maintenance Gravel, LM** includes the cost of constructing, maintaining, and removing the aggregate surface.

The Engineer will measure **Maintenance Gravel** in tons by the scale weight of the material. The Engineer will perform moisture tests at the start of weighing operations and if construction operations, weather conditions, or other causes may change the moisture content of the material. If tests indicate a moisture content greater than 8 percent, the Engineer will deduct the weight of the excess moisture from the scale weight of the maintenance gravel until moisture tests indicate the moisture content is no greater than 8 percent.

The Engineer will determine the moisture content and pay weights as specified in section 109.

C. **Driveway Maintenance, Commercial; Driveway Maintenance, Residential** and **Intersection Maintenance** includes construction, grading, maintenance, removal, replacement and disposal of the aggregate surface. These items will be paid for once per location regardless of the number of times the aggregate surface is placed, maintained, removed or replaced.

Intersection Maintenance will be paid for separately for each approach of the highway, street or alley that joins or crosses the roadway.

Section 307. AGGREGATE SHOULDERS AND APPROACHES

307.01. Description. This work consists of constructing aggregate shoulders or approaches on a prepared subgrade or existing aggregate surface.

307.02. Materials. Provide material in accordance with the following:

Dense-Graded Aggregate 21A, 21AA, 22A, 23A, 23AA 902
Salvaged Aggregate..... 902

Provide the following aggregate grades for the class of shoulders and approaches required by the contract documents:

A. For Class I, provide Dense-Graded Aggregate 22A;
B. For Class I requiring a paved surface, provide Dense-Graded Aggregate 21A, 21AA or 22A;
C. For Class II, provide Dense-Graded Aggregate 23A or 23AA;
D. For Class III, provide salvaged aggregate, Dense-Graded Aggregate 23A or 23AA; and
E. For Class IV shoulders, provide existing shoulder material.

For salvaged materials, provide Engineer-approved salvaged aggregate or other material from existing roads or stockpile. Remove particles larger than 2 inches from borrow or salvaged materials and dispose of in accordance with subsection 205.03.P.

307.03. Construction.

A. **Trenching.** Excavate, shape, and compact trenches to the width and depth required. For trenches under Hot Mix Asphalt (HMA), compact the bottom of the trench to at least 98 percent of the maximum unit weight at no greater than optimum moisture content. Compact the bottom of other trenches to 95 percent of the maximum unit weight. The Engineer may allow 95 percent if 98 percent of maximum unit weight cannot be achieved.

Take ownership of trenched material and dispose in accordance with subsection 205.03.P at no additional cost to the Department.

Place and maintain traffic control devices in accordance with section 812, in shoulder areas that cannot be backfilled and compacted the same day. Bring shoulder material flush with existing pavement the next calendar day or as directed by the Engineer.

B. **Constructing Shoulders and Approaches.** Provide a ticket with each load stating the following information:

1. Project number;
2. Aggregate source;
3. Aggregate series;

4. Date;
5. Time;
6. Truck identifier number;
7. Supplier name; and
8. Type of aggregate approval.

If the contract requires payment by weight, ensure the ticket includes the gross weight, tare weight, and net weight to the nearest 100 pounds. Determine the truck tare weight at least once daily.

If the contract does not require payment by weight, the Engineer may accept written documentation in lieu of tickets. Written documentation must identify the pay item of the material and include all information listed above except time and truck identifier number.

Provide aggregate with a uniform gradation, free of contamination and segregation when placed. Do not place aggregate shoulder and approach material on frozen, soft, unstable, or rutted subgrade, subbase, or aggregate base.

The Contractor may use additives to facilitate compaction, shaping, and maintenance.

If placing aggregate shoulder or approach material in a layer less than 3 inches, scarify with 2 inches of the layer below.

Do not rut or distort the subbase material or aggregate base during spreading. Place and compact material without damaging adjacent paved surfaces. Maintain aggregate material in a smooth, stable condition, and provide dust control.

Maintain compacted aggregate flush with each layer of placed HMA.

Grade aggregate material to provide positive drainage off the shoulder.

C. **Density Requirements.** Meet the following density requirements:

1. **Class I Shoulders and Approaches.** Compact Class I shoulders and approaches to at least 98 percent of the maximum unit weight at no greater than optimum moisture content.

2. **Class II and Class III Shoulders and Approaches.** Compact Class II and Class III shoulders and approaches to at least 95 percent of the maximum unit weight at no greater than optimum moisture content, except for 3 inches or less layers as noted below.

3. **Class IV Shoulders.** Compact Class IV shoulders to at least 95 percent of the maximum unit weight at no greater than optimum moisture content, except for 3 inches or less layers as noted below.

D. **Surplus or Unsuitable Aggregate Material.** The Contractor may use surplus or unsuitable aggregate in fills in accordance with section 205.

Take ownership and dispose of unused material in accordance with subsection 205.03.P at no additional cost to the Department.

307.04. Measurement and Payment.

Pay Item	**Pay Unit**
Trenching	Station
Shld, Cl __	Ton
Shld, Cl __, LM	Cubic Yard
Shld, Cl __, CIP	Cubic Yard
Shld, Cl __, __ inch	Square Yard
Approach, Cl __	Ton
Approach, Cl __, LM	Cubic Yard
Approach, Cl __, CIP	Cubic Yard
Approach, Cl __, __ inch	Square Yard

A. **Trenching.** The Engineer will measure **Trenching** along each pavement edge.

The unit price for **Trenching** includes the cost of trenched aggregate reused in shoulders or approaches that does not require loading and hauling.

The Engineer will measure **Shld, Cl III, LM** and **Approach, Cl III, LM** at the final point of delivery. The Department will pay for trenched aggregate, that is reused in shoulders or approaches, which requires loading and hauling, as **Shld, Cl III, LM** and **Approach, Cl III, LM.**

The Engineer will measure and the Department will pay for trenched aggregate, reused in fills, as Embankment in accordance with subsection 205.04.

B. **Shoulder and Approach.** If the contract requires the Engineer to measure shoulder or approach contract items by weight, the Engineer will use the scale weight, including additives, unless the moisture content is greater than 8 percent. The Engineer will perform moisture tests at the start of weighing operations and if construction operations, weather conditions, or other causes may change the moisture content. If tests indicate a moisture content greater than 8 percent, the Engineer will deduct the weight of the excess moisture from the scale weight of the aggregate until moisture tests indicate the moisture content is no greater than 8 percent. The Engineer will determine the aggregate moisture content and pay weights in accordance with section 109.

If the contract requires the Engineer to measure shoulder or approach contract items by area, the Engineer will make longitudinal measurement parallel to the center line. The Engineer will use the transverse dimensions shown on the plans.

If the contract requires the Engineer to measure shoulder or approach contract items by volume in place, The Engineer will use the lines and dimensions shown on the plans to measure volumes, compacted in place.

The Engineer will measure shoulder or approach, loose measure pay items based on hauling unit dimensions and load count, before placement and compaction. The unit prices for shoulder and approach loose measure pay items include the cost of providing, hauling, placing, compacting, and grading the material.

C. **Water.** The cost to provide and apply water to facilitate placement or compaction is included in the unit prices for related items of work.

Section 308. GEOSYNTHETICS FOR BASE

308.01. Description. This work consists of providing and installing geosynthetic products on a surface approved by the Engineer.

308.02. Materials. Provide material in accordance with the following:

Geotextile Separator 910
Stabilization Geotextile..... 910
Road Grade Biaxial Geogrid 910

308.03. Construction.

A. **Geotextile Placement.** Place or install Geotextile Separator or Stabilization Geotextile products in accordance with the manufacturer's installation guidelines and this subsection.

Do not operate equipment required to place backfill directly on geotextile products. Eliminate wrinkles or waves that develop during placement. Place the products in direct contact with the soil below before placing backfill on the geotextile products. Do not expose geotextile to ultraviolet degradation for more than 7 days.

Shingle-lap longitudinal and transverse joints at least 2 feet, or seam the joints in accordance with the manufacturer's recommendations. Ensure field or factory seams meet the minimum grab tensile strength for the product application. Do not use nylon thread for geotextile seaming. Place seams facing upward for inspection purposes. Repair tears or damage to the geotextile in accordance with the manufacturer's recommendations.

B. **Geogrid Placement.** All areas immediately beneath the installation area for the geogrid must be properly prepared as shown on the plans, as specified, or as directed by the Engineer. Place or install the geogrid in accordance with the manufacturer's installation guidelines and this subsection.

To prevent undue exposure or damage to the geogrid, only place that amount of geogrid required for immediately pending work. Do not expose geogrid to ultraviolet degradation for more than 7 days.

The geogrid must be unrolled parallel to the centerline of the roadway. Place the geogrid taut prior to placement of subsequent aggregate layer. Anchor the geogrid in position after placement, until placement of the subsequent aggregate layer. Overlap adjacent rolls of geogrid 2 feet minimum. Whenever possible the placement of the subsequent aggregate layer must proceed from the centerline of the geogrid placed out, to assist in tensioning the geogrid. Place at least 6 inches of the subsequent aggregate layer over the geogrid before allowing construction vehicles on the geogrid.

C. **Aggregate or Granular Material Placement.** Spread and shape the subsequent layer of aggregate or granular material after placing geosynthetic to create a stable work platform before compaction. Place additional aggregate or granular material, as required per other applicable sections, and compact. Fill ruts with additional aggregate or granular material and compact before placing each subsequent layer.

308.04. Measurement and Payment.

Pay Item	**Pay Unit**
Geotextile, Separator	Square Yard
Geotextile, Separator, Non-Woven	Square Yard
Geotextile, Stabilization	Square Yard
Geotextile, Stabilization, Non-Woven	Square Yard
Road Grade Biaxial Geogrid	Square Yard

A. **General**. The Engineer will measure **Geotextile, Separator**; **Geotextile, Separator, Non-Woven**; **Geotextile, Stabilization; Geotextile, Stabilization, Non-Woven; and Road Grade Biaxial Geogrid** in place, to the limits shown on the plans.

Geotextile, Separator; Geotextile, Separator, Non-Woven; Geotextile, Stabilization; and **Geotextile, Stabilization, Non-Woven** include furnishing the material, labor, and equipment required to furnish and place geotextiles, and all materials and labor required to create seams. No allowance will be made for overlap, splices or material cut off or wasted.

Road Grade Biaxial Geogrid includes furnishing the material, labor, and equipment required to furnish, place and anchor the geogrid, and any hand work necessary to establish grades and make geogrid splices. No allowance will be made for overlap, splices or material cut off or wasted.

The cost of aggregate or granular material, including additional quantities required to fill ruts, is included in the unit prices for related pay items.

DIVISION 4 – DRAINAGE FEATURES

Section	Title	Page No.
401	Pipe Culverts	XX
402	Storm Sewers	XX
403	Drainage Structures	XX
404	Underdrains	XX
405	Pump Station Construction	XX
406	Precast Three-Sided, Arch, and Box Culverts	XX

DRAFT – July 2020

NOTES

Section 401. PIPE CULVERTS

401.01. Description. This work consists of constructing pipe culverts of the size and class required, including excavation, bedding, and backfill.

The following terms apply to this section.

Type HE. An elliptical pipe placed with the major axis in the horizontal direction.

Type VE. An elliptical pipe placed with the major axis in the vertical direction.

401.02. Materials. Provide materials in accordance with the following:

Granular Material, Class II, III, IIIA 902
Aggregate, 6A, 17A, 34R 902
Asphaltic Materials 904
Culvert Pipe 909
Sealers for Culvert Joints 909
Steel Pipe (for jacking in place) 909
Drainage Marker Post 909
Geosynthetic 910
Culvert, Downspouts 909
Concrete, Grade 3500 1004
Mortar, Type R 2 1005

Select pipe sections and joint assemblies for use in culverts from the Qualified Products List.

Provide grout for jacked in place steel pipe that consists of a mixture of portland cement and no greater than 50 percent sand by volume.

Pipe Culverts. Pipe culverts are divided into six classes, as specified in Table 401-1.

Provide the type of culvert material indicated on the plans, if shown.

If the contract only specifies the size and class of the culvert, select and provide an alternate culvert pipe allowed in Table 401-1.

The Engineer will allow the substitution of a higher strength or greater thickness of culvert for the minimum strength or minimum thickness required.

Table 401-1 Pipe Alternates for Culvert Classes						
Type of Pipe Depth of Cover (ft) (a)	**Class A Culvert 1–10** (l)(i)	**Class B Culvert >10–16**	**Class C Culvert >16–23**	**Class D Culvert >23–33** (i)	**Class E Culvert 1–3** (b)(i)	**Class F Drive Culvert** (c)
Reinforced Concrete Pipe (d)	II	III	IV	V	IV	II
Nonreinforced Concrete Pipe (e)	1	3	No	No	No	1, 3 (f)
Corrugated and Spiral Ribbed Al-Alloy Pipe	Yes	Yes	Yes	Yes	No	Yes
Corrugated and Spiral Ribbed Steel Pipe	Yes	Yes	Yes	Yes	No	Yes
Dual Wall Polymer-precoated galvanized steel pipe	Yes	Yes	Yes	Yes	No	Yes
Smooth-Lined Corrugated Plastic Pipe (CPE) (g, j)	Yes (h)	Yes (k)	No	No	No	Yes (h)
Corrugated Polyvinyl Chloride Pipe (CPV) (m)	Yes (h)	Yes (k)	No	No	No	Yes

a. Cover, including the pavement structure is defined as the height of fill above the top of the pipe measured to final grade.
b. Class E culvert applies when the culvert is beneath the influence of proposed pavement and the depth of cover is 3 ft or less.
c. Class F culvert applies for driveway culverts (residential and commercial).
d. Roman numerals refer to class of reinforced concrete pipe in accordance with AASHTO M170.
e. Arabic numerals refer to the class of nonreinforced concrete pipe in accordance with AASHTO M86.
f. Nonreinforced concrete pipe Class 1 is allowed for Class F culverts with a depth of cover up to 10 ft. Nonreinforced concrete pipe Class 3 is allowed for Class F culverts with a depth of cover from 10 ft to 16 ft.
g. Provide CPE in accordance with AASHTO M294, Type S polyethylene pipe.
h. Allowed only for 36 in diameter pipe and under for CPE and CPV pipes. At least 3 ft of cover.
i. Special design is required for fill heights less than 1 ft and greater than 33 ft.
j. At least 2 ft cover if the culvert is outside the influence of proposed pavement (measured from top of pipe to final grade)
k. Allowed only for 12 in to 24 in diameter CPE and CPV pipes. Refer to the Class B Plastic Pipe Qualified Products List for approved manufacturers and products.
l. Class A culvert applies when the culvert is outside the influence of proposed pavement or is beneath the influence of proposed pavement and the depth of cover is greater than 3 ft but less than or equal to 10 ft.
m. CPV must conform to AASHTO M304.

401.03. Construction.

A. **Excavation and Culvert Bedding.** Excavate in accordance with subsection 206.03.A. Construct pipe culvert bedding using granular material Class IIIA. Place bedding at least 4 inches deep and uncompacted for the entire length of the culvert. Where rock or hardpan is encountered,

excavate the trench to at least 6 inches below the proposed bottom of the pipe; place bedding using uncompacted granular material Class IIIA.

Where unstable soil conditions, or obstructions other than rock, require excavation of the trench below the elevation detailed on the plans; undercut, backfill, and compact the trench as directed by the Engineer. Use 6A, 17A, or 34R aggregate as backfill material for undercutting due to unstable soil conditions. Use 34R aggregate for bedding material instead of granular material Class IIIA. Place the backfill up to 4 inches below the proposed bottom of the pipe. The completed work will be paid for as trench undercut and backfill according to subsection 402.04.E.

B. **Repair of Damaged Coated Surfaces.** Repair coated culvert surfaces damaged during pipe transportation, handling, or installation, at no additional cost to the Department. Complete repair of galvanized culvert surfaces in accordance with subsection 716.03.E or as approved by the Engineer. Repair other coated culvert surfaces as directed by the Engineer.

C. **Laying and Jointing Pipe.** Lay culverts as shown on the plans, with bells or grooves upgrade, and ends fully and closely jointed. Provide a full, firm bearing throughout the length of the culvert. Wrap all pipe joints with geotextile blanket. Use geotextile at least 36 inches wide and center it on the joint. Overlap the ends of the geotextile blanket at least 12 inches.

Remove and re-lay culvert sections showing signs of settlement or poor horizontal or vertical alignment, as determined by the Engineer. Remove, replace and mandrel test culverts damaged by the Contractor's operations, if required by the Engineer.

Correct settled, misaligned, or damaged culvert sections at no additional cost to the Department.

1. **Corrugated Plastic Pipe (CPE and CPV).** Provide homing marks on CPE and CPV pipe sections and joint material to show the correct alignment of the pipe sections and joint material during field installation.

   After the trench backfill and compaction is complete, the Engineer will select at least 50 percent of the installed length of each size of CPE and CPV for deformation testing. Provide the labor and equipment required to complete this testing.

   Unless otherwise approved by the Engineer, perform the mandrel test within 10 working days prior to pavement surfacing or completion of final grade.

   Use a nine-point mandrel with an effective diameter of 95 percent of the nominal pipe diameter. Provide the Engineer with a proving-ring to verify the mandrel size. Pull mandrel through the pipe by hand using non-mechanical means and without damaging the pipe. The Contractor may use laser profile technology to measure deflection as an approved alternative to mandrel testing.

Remove and reinstall, or replace, pipe with a nominal diameter reduced by at least 5 percent at no additional cost to the Department. Only reinstall undamaged pipe. Do not reinstall pipe without the Engineer's prior approval.

The Contractor is responsible for all expenses and delays due to the replacement of deformed or damaged pipe.

2. **Concrete Pipe.** Install reinforced concrete elliptical pipe with the longer axis placed horizontally, unless otherwise required.

   Install Type HE elliptical pipe with the longer axis within 5 degrees of the horizontal.

   Install Type VE elliptical pipe with the longer axis within 5 degrees of the vertical.

   Install circular concrete pipe with elliptical reinforcement so the lift holes or manufacturer's marks are on top of the pipe. Place pipe so the lift holes or manufacturer's marks, designating the top and bottom of the pipe, are not more than 5 degrees from the vertical plane through the longitudinal axis of the pipe. After installing the pipe, seal the lift holes with concrete plugs and waterproof.

3. **Metal Pipe.** Provide metal pipe with helical corrugations with a continuous lock seam in accordance with subsection 909.05.

   Use of dissimilar types of base metal (steel or aluminum alloy) or dissimilar types of coatings on steel (zinc or aluminum) in a single line of pipe is prohibited. Construction between dissimilar metal type pipes is not allowed unless a drainage structure is used to transition between the two dissimilar type metals. Changing materials at the drainage structure would be allowed as long as the roughness coefficients were adjusted accordingly. Use coupling bands of the same base metal and coating metal as the pipe.

4. **Extending Culverts.** When extending a pipe culvert cast a concrete collar at least 3 inches thick and extending 6 inches on each side of the joint. Wrap the connecting joint with a 36-inch wide geotextile strip centered on the joint. When extending an existing corrugated steel pipe with a corrugated steel pipe, the Engineer will allow a dimple band at least 24 inches wide wrapped with geotextile blanket instead of a concrete collar on the first connection if the existing culvert is in good condition. Other methods of connecting to the existing pipe require approval of the Engineer before construction. Provide joints tested in accordance with MTM 723 for remaining joints of the extension.

D. **Backfilling.** Backfill in accordance with Standard Plan R-83 series and as shown on the plans. Place backfill equally on opposite side of the pipe at the same time and in layers no greater than 10 inches deep or half the diameter of the pipe, whichever is less deep. Compact each layer to at least 95 percent of the maximum unit weight.

Maintain at least 3 feet of cover, unless trimming for final grade.

Maintain the line and grade of the culvert during the backfilling operation.

E. **Headwalls and End Sections.** Protect the ends of the culvert using headwalls or end sections constructed in accordance with details on the plans. Construct headwalls in accordance with section 706.

Use precast concrete end sections on concrete culverts in accordance with Standard Plan R-86 series. Construct sloped end sections on concrete culverts as required, using either metal or concrete sloped end sections in accordance with Standard Plan R-95 series. Use either precast or cast in place footings for precast end sections or precast sloped end sections as required. Form or place them at the locations and to the elevations shown on the plans.

Use metal end sections on corrugated metal pipe culverts. Attach metal end sections to the ends of corrugated metal pipe using standard metal bands or other connecting devices as shown on the plans or approved by the Engineer. Provide and install toe plates on the metal end sections if shown on the plans.

Use either precast concrete or metal end sections on CPE. Plastic end sections are prohibited. Fasten end sections to the pipe as recommended by the pipe manufacturer or as directed by the Engineer. The Engineer will allow the use of a metal end section that is one size larger in diameter than the CPE. Slip the end section over the end of the pipe and securely fasten, making sure that the portion of the plastic pipe left exposed is less than 3 inches. If using a concrete end section, wrap the joint with a strip of geotextile blanket 36 inches wide and centered on the joint. Overlap the ends of the geotextile at least 12 inches.

Provide and install end section grates on designated culvert end sections. Fabricate end section grates from weldable grade hot-rolled steel bars, plain or deformed, of the diameter and configuration shown on the plans. Fasten grates securely to the concrete end sections as shown on the plans.

Place salvaged end sections in accordance with specifications for placing new end sections.

Replace end sections damaged by Contractor's operation during salvaging or replacing operations with the same size end section as the original, at no additional cost to the Department.

When discharging to waters of the State, permanently label all end sections or other points of storm water discharge with "MDOT" or the local agency's name in a conspicuous location which will remain visible after construction. Ensure that the marking is located on the interior of flared end sections in approximate alignment with the spring line of the conduit. For precast or cast-in-place concrete headwalls or instances where the conduit protrudes through a concrete or steel wall, ensure the marking is located on the exterior face directly above the pipe, or as directed by

the Engineer. Refer to Standard Plan R-85, R-86, R-88 or R-95 series for specific applications. Labels applied by stenciling utilizing ink, paint or other surface application are prohibited.

The letters "MDOT" or the local agency's name must be physically stamped into steel end sections creating an indention in the material. For concrete headwalls, end sections and walls the lettering must be physically inscribed into the material. In those cases where the conduit protrudes through a steel sheet pile wall, the letters may be placed on the face of the wall by welding.

The individual letters must be legible and sized to 1½ inches high by 1 inch wide each. The depth of the letters must be a minimum of $^1/_4$ inch for concrete and $^1/_8$ inch for steel materials. If the letters are placed by welding, the thickness of the weld must be at least $^1/_4$ inch.

F. **Drainage Marker Posts.** Place drainage marker posts at headwalls and culvert end sections for culverts with a diameter no greater than 36 inches, and at outlet endings. Install drainage marker posts at least 2 feet deep, or as recommended by the manufacturer.

G. **Pipe Culverts Jacked in Place.** Jack the culvert into place to the line and grade shown on the plans or established by the Engineer.

If jacking pipe under railroad tracks, submit to the Engineer sheeting and bracing plans for the jacking pits for approval by the railroad company. Do not begin excavation of the jacking pit until receipt of the approval.

Excavate the approach trench large enough to accommodate jacks and blocking and at least one section of pipe. Lay two rails or sills in the bottom of the trench to keep the pipe at the established line and grade.

Minimize excavation ahead of the pipe to prevent caving of the earth. The Engineer will allow attachment of a steel cutting edge or shield to the front section of pipe to form and cut the required opening for the pipe.

A steerable pipe jacking shield must be used on the lead pipe.

The annular space between the casing and the carrier pipe must be bulkheaded in accordance with 402.03.E and grouted with an Engineer approved material.

Fill voids between the excavation and the pipe using materials and placing methods approved by the Engineer.

1. **Obstructions.** Engineer will measure, and the Department will pay for the removal of obstructions, which require the use of special procedures or tools, at the unit price for **Obstruction Removal**, in accordance with subsection 718.04.D.

H. **Steel Pipe Jacked in Place.** Jack steel pipe in place to serve as a carrier pipe or a casing for a carrier pipe. Jack steel pipes in place in accordance with subsection 401.03.G. Bulkhead the ends of steel pipe used as casing for carrier pipe in accordance with subsection 402.03.E. The annular space between the carrier pipe and the casing must be completely filled with grout approved by the Engineer.

Obstructions will be removed in accordance with subsection 401.03.G.1.

I. **Steel Casing Pipe.** Install steel casing pipe in a trench as shown on the plans. Provide steel casing pipes placed for future use with a temporary bulkhead at each end to prevent infiltration into the pipe.

Obstructions will be removed in accordance with subsection 401.03.G.1.

J. **Disposal of Surplus Material.** Take possession and dispose of surplus material in accordance with subsection 205.03.P.

K. **Cleanout.** Maintain culverts installed on the project. Ensure they are free of silt, debris, and other foreign matter above the flow line of the drainage course at the time of final acceptance and in accordance with section 209.

L. **Video Inspection.** Video inspect culverts as specified for sewers in subsection 402.03.J. Video inspection is not required for the following:

1. Driveway culverts,
2. Culvert extensions less than 50 feet,
3. New culverts less than 50 feet, or
4. The extension of existing catch basin leads less than 20 feet.

M. **Dewatering and Maintaining Stream Flow During Construction.** Maintain the stream flow through the existing channel, temporary channel, temporary culvert, or bypass pumping, unless approved by the Engineer.

Prepare a bypass pumping or bypass flow control plan that complies with the EGLE permit requirements and Standard Plans and submit it to the Engineer for review 10 days before the installation of the system.

When using a temporary bypass pipe, sluice, or similar structure, provide sediment control structures at the inlet to contain sediment before entering the bypass structure. Maintain the sediment control structure to provide adequate flow and sediment removal capacity.

Install temporary dams constructed of sufficient size and depth to withhold the expected backwater. Temporary uncontained material earthen dams are prohibited.

Dewater without causing damage to nearby property, foundations, utilities or pavements, and without interference to the rights of the public, owners of private property, pedestrians, motorists or the work of other contractors.

Do not disturb the soil under and next to existing structures during dewatering and temporary pumping operations. Contractor is responsible for controlling any additional sediment created by contractor operations. Do not overload or obstruct existing drainage facilities.

401.04. Measurement and Payment.

Pay Item	Pay Unit
Culv, Cl __, __ inch	Foot
Culv, Cl __, (material), __ inch	Foot
Culv, Downspout __ inch	Foot
Culv, Outlet Headwall, __ inch	Each
Culv, Reinf Conc Ellip, (shape) Cl __, (rise) inch x (span) inch	Foot
Culv, CSP Arch, Cl __, (span) inch × (rise) inch	Foot
Culv, Slp End Sect, (slope), __ inch, Longit	Each
Culv, Slp End Sect, (slope), __ inch, Transv	Each
Culv, Slp End Sect, Arch Pipe, (slope), (span) inch × (rise) inch, Longit	Each
Culv, Slp End Sect, Arch Pipe, (slope), (span) inch × (rise) inch, Transv	Each
Culv, Slp End Sect, Ellip Pipe, (slope), (rise) inch × (span) inch, Longit	Each
Culv, Slp End Sect, Ellip Pipe, (slope), (rise) inch × (span) inch, Transv	Each
Culv End Sect, (material), __ inch	Each
Culv End Sect, __ inch	Each
Culv End Sect, Footing	Each
Culv End Sect, Grate	Each
Culv, Cl __, __ inch, Jacked in Place	Foot
Steel Casing Pipe, __ inch, Jacked in Place	Foot
Steel Casing Pipe, __ inch, Tr Det __	Foot
Dr Marker Post	Each
Culv End Sect, Salv, 30 inch or less	Each
Culv End Sect, Salv, over 30 inch	Each
Outfall Label	Each

A. **Culverts.** The Engineer will measure culverts, of the diameter, class, or material required, by length, excluding the length of end sections as shown on the plans. The unit prices for culverts include the cost of the following:

1. Excavating the material down to grade or to the culvert bedding bottom elevation;
2. Dewatering and maintaining the stream flow during construction stages;
3. Providing and placing the culvert and geotextile strip;
4. Providing temporary cover and restraining the pipe to maintain line and grade;
5. Providing, placing, and compacting the backfill;

6. Mandrel testing if required; and
7. Disposing of excess material.

B. **Culvert, Jacked in Place.** The Engineer will measure **Culv, Cl __, __ inch, Jacked in Place** of the class and size required, by length, as determined by multiplying the number of units jacked by the commercial laying length. The unit price for **Culv, Cl __, __ inch, Jacked in Place** includes the cost of excavating the pit; providing and installing sheeting, bracing, and other safety devices; providing jacking equipment; drainage and dewatering; and other items associated with the operation.

C. **Culvert End Sections.**

1. **End Sections.** The unit price for **Culv, Slp End Sect** of the size or type required includes the cost of providing and placing end sections, including longitudinal and cross tubes as detailed on Standard Plan R-95 series.

   The unit price for **Culv End Sect** of the size or type required includes the cost of providing and placing the end section.

   The unit price for **Culv End Sect, Metal** includes the cost of providing and placing the end section and toe plate, as shown on the plans or standard plans.

   If corrugated plastic pipe is provided, the Department will pay for culvert end sections of the diameter required for the culvert, even if the Contractor provides a metal end section larger than the nominal diameter of the pipe.

   The unit price for culvert end section includes the cost of fastening the end section to the pipe and wrapping the joint with geotextile blanket. The Department will pay for required riprap in accordance with subsection 813.04.

   The unit price for **Outfall Label** includes the cost of providing and installing the label as described in 401.03.E.

2. **Culvert End Sections, Footing.** The Department will pay for footings required for precast concrete end sections as **Culv End Sect, Footing**. The unit price for **Culv End Sect, Footing** includes the cost of the following, for the footing as shown on the plans:

   a. Excavation and forming;
   b. Providing and placing the steel reinforcement; and
   c. Providing, placing, finishing, and curing the concrete.

3. **Culvert End Sections, Salvage.** The unit price for **Culv End Sect, Salv** includes the cost of removing the existing end section, salvaging and storing, and reinstalling end sections.

4. **Culvert End Section, Grate.** The Engineer will measure **Culv End Sect, Grate** by weight as shown on the plans for the size of grate required.

D. **Headwalls.** The Engineer will measure, and the Department will pay for headwalls as steel reinforcement and concrete, Grade 3500, in accordance with subsection 706.04. If using precast wingwalls, headwalls, and aprons instead of cast-in-place wingwalls, headwalls, and aprons, the Department will pay for them as the corresponding pay items for the cast-in-place wingwalls, headwalls, and aprons as required by the contract.

The unit price for **Culv, Outlet Headwall** will include precast outlet headwalls as shown in Standard Plan R-85 series and will be paid for by each.

E. **Jacked in Place Steel Pipe.** The Department will not pay separately for jacked in place steel pipe used, at the Contractor's discretion, to act as a casing for the carrier pipe. The cost of grouting between the carrier and casing pipes is included in payment for the carrier pipe.

F. **Steel Casing Pipe.** The unit price for steel casing pipe includes the cost of excavation and backfill.

The Department will pay separately for carrier pipe inserted into a steel casing pipe. The unit price for the carrier pipe includes the cost of casing chocks, inserting the carrier pipe, and required grouting.

G. **Videotaping Sewer and Culvert Pipe.** The Engineer will measure, and the Department will pay for videotaping sewer and culvert pipe in accordance with subsection 402.04.

H. **Rock Excavation.** The Engineer will measure and the Department will pay separately for rock excavation in accordance with subsection 205.04.

I. The unit price for **Dr Marker Post** includes the cost of providing and installing the post as described in 401.03.F.

J. The unit price for **Obstruction Removal** will be paid for in accordance with subsection 718.04.D.

Section 402. STORM SEWERS

402.01. Description. This work consists of constructing storm sewers of the size and class required, including excavation, bedding, and backfill.

The following terms apply to this section.

Type HE. An elliptical pipe placed with the major axis in the horizontal direction.

Type VE. An elliptical pipe placed with the major axis in the vertical direction.

402.02. Materials. Provide materials in accordance with the following:

Granular Material Class II, III, IIIA 902
Aggregate 6A, 17A, 34R 902
Sewer Pipe 909
Sealers for Sewer Joints 909
Steel Pipe (for jacking in place) 909
Geosynthetics 910
Concrete, Grade 3000 1004
Mortar, Type R-2 1005

Select pipe with watertight joint systems from the Qualified Products List.

Storm sewers are divided into five classes, as specified in Table 402-1. If the contract only specifies the size and class of sewer, select and provide an alternate storm sewer pipe allowed in Table 402-1.

For types of sewer material required, but not included in Table 402-1, the contract will specify the type and size of sewer material.

The Engineer will allow the substitution of a higher strength or greater thickness of sewer for the minimum sewer strength or minimum thickness required.

Table 402-1 Pipe Alternates for Storm Sewer Classes					
Type of Pipe/Depth of Cover in feet (a)	**Class A Sewer 1–10** (k)(l)	**Class B Sewer >10–16**	**Class C Sewer >16–23**	**Class D Sewer >23–33** (l)	**Class E Sewer 1–3** (b)(l)
Reinforced Concrete Pipe (c)	II	III	IV	V	IV
Nonreinforced Concrete Pipe (d)	1	3	No	No	No
Corrugated and Spiral Ribbed Al-Alloy Pipe (e)	Yes	Yes	Yes	Yes	No
Corrugated and Spiral Ribbed Steel Pipe (f)	Yes	Yes	Yes	Yes	No
Dual Wall Polymer-precoated Galvanized Steel Pipe	Yes	Yes	Yes	Yes	No
Smooth-Lined Corrugated Plastic Pipe (CPE) (g)	Yes (h)	Yes (i)	No	No	No
Corrugated Polyvinyl Chloride Pipe (CPV) (j)	Yes (h)	Yes (i)	No	No	No

a. Cover, including the pavement structure is defined as the height of fill above the top of the pipe measured to final grade.
b. Class E Sewer applies when the sewer is beneath the influence of proposed pavement and the depth of cover is 3 ft or less.
c. Roman numerals refer to class of reinforced concrete pipe in accordance with AASHTO M170.
d. Arabic numerals refer to the class of nonreinforced concrete pipe in accordance with AASHTO M86.
e. Allowed for 12 in to 66 in spiral ribbed and 12 in to 18 in helically corrugated 2⅔ in × ½ in aluminum alloy pipe only.
f. Allowed for 12 in to 84 in spiral ribbed and 12 in to 18 in helically corrugated 2⅔ in × ½ in steel pipe only.
g. Provide CPE in accordance with AASHTO M294, Type S polyethylene pipe.
h. Allowed only for 36 in diameter pipe and under for CPE and CPV pipes. At least 3 ft of cover.
i. Allowed only for 12 in to 24 in diameter CPE and CPV pipes. Refer to the Class B Plastic Pipe Qualified Products List for approved manufacturers and products.
j. CPV must conform to AASHTO M304.
k. Class A sewer applies when the sewer is outside the influence of proposed pavement or is beneath the influence of proposed pavement and the depth of cover is greater than 3 ft but less than or equal to 10 ft.
l. Special design is required for depths of cover less than 1 ft and greater than 33 ft.

402.03. Construction.

A. **Excavation, Trench Construction, and Sewer Bedding.** Perform trench construction using methods meeting the health and safety requirements specified in subsection 104.07.

Excavate the trench as shown on the plans, or as determined by the Engineer. Construct the trench width to at least the minimum width shown on Standard Plan R-83 Series, but wide enough to provide free working space and to allow compaction of the backfill around the pipe. Shape the bottom of the trench to support the pipe uniformly. Place bedding using uncompacted granular material Class IIIA to the required elevation.

Where unstable soil conditions, or obstructions other than rock, require excavation of the trench below the elevation detailed on the plans; undercut, backfill, and compact the trench as directed by the Engineer. Use 6A, 17A, or 34R aggregate as backfill material for undercutting due to

unstable soil conditions. Use 34R aggregate for bedding material instead of granular material Class IIIA. Place the backfill up to 4 inches below the proposed bottom of the pipe. The completed work will be paid for as trench undercut and backfill according to subsection 402.04.E.

During sewer construction, maintain and protect existing live utilities. Minimize service interruptions and coordinate with the local municipality or utility company. Immediately repair or replace utilities, interrupted during sewer construction, as directed by the Engineer.

B. **Repair of Damaged Coated Surfaces.** Repair coated pipe surfaces damaged during pipe transportation, handling, or installation, at no additional cost to the Department. Complete repair of galvanized pipe surfaces in accordance with subsection 716.03.E or as approved by the Engineer. Repair other coated sewer pipe surfaces as directed by the Engineer.

C. **Laying and Jointing Pipe.** Lay storm sewers as shown on the plans, with bells or grooves upgrade, and ends fully and closely jointed. Provide a full, firm bearing along the length of each pipe section. Wrap all pipe joints, with geotextile blanket. Use geotextile at least 36 inches wide and center it on the joint. Overlap the ends of the geotextile blanket at least 12 inches.

Remove and replace pipe damaged by Contractor operations. After trench backfill and compaction is complete mandrel test replaced CPE and CPV pipe. Remove and re-lay sewer sections showing signs of settlement or poor horizontal or vertical alignment, as determined by the Engineer, at no additional cost to the Department.

1. **Corrugated Plastic Pipe (CPE and CPV).** Provide homing marks on CPE and CPV pipe sections and joint material to show the correct alignment of the pipe sections and joint material during field installation.

   After trench backfill and compaction is complete, the Engineer will select at least 50 percent of the installed length of each size of CPE and CPV for deformation testing. Provide the labor and equipment required to complete this testing.

   Unless otherwise approved by the Engineer, perform the mandrel test within 10 working days prior to pavement surfacing or completion of final grade.

   Use a nine-point mandrel with a diameter equal to 95 percent of the nominal pipe diameter. Provide the Engineer with a proving-ring to verify the mandrel size. Pull the mandrel through the pipe by hand, using non-mechanical means and without damaging the pipe. The Contractor may use laser profile technology to measure deflection as an approved alternative to mandrel testing.

   Remove and reinstall, or replace, pipe with a nominal diameter reduced by at least 5 percent at no additional cost to the Department. Only reinstall undamaged pipe. Do not reinstall pipe without the Engineer's prior approval.

The Contractor is responsible for all expenses and delays caused by reinstallation or replacement of pipe.

2. **Concrete Pipe.** Install reinforced concrete elliptical pipe with the longer axis placed horizontally, unless otherwise required.

   Install Type HE elliptical pipe with the longer axis within 5 degrees of horizontal.

   Install Type VE elliptical pipe with the longer axis within 5 degrees of vertical.

   Install circular concrete pipe with elliptical reinforcement so the lift holes or manufacturer's marks are on top of the pipe. Place pipe so the lift holes or manufacturer's marks, designating the top and bottom of the pipe, are no more than 5 degrees from the vertical plane through the longitudinal axis of the pipe. After installing the pipe, seal the lift holes with concrete plugs and waterproof.

3. **Metal Pipe.** Provide metal pipe with helical corrugations with a continuous lock seam in accordance with subsection 909.05.

   Use of dissimilar types of base metal (steel or aluminum alloy) or dissimilar types of coatings on steel (zinc or aluminum) in a single line of pipe is prohibited. Construction between dissimilar metal type pipes is not allowed unless a drainage structure is used to transition between the two dissimilar type metals. Changing materials at the drainage structure would be allowed as long as the roughness coefficients were adjusted accordingly. Use coupling bands of the same base metal and coating metal as the pipe.

D. **Sewer Taps.** Make connections to county, municipality, or drain commission-owned storm sewers in accordance with the regulations of the owner and as required by the contract. If a conflict exists between the owner's regulations and these specifications, the owner's regulations will take precedence.

For existing storm sewers with plugs or bulkheads, remove plugs or bulkheads without damaging the existing sewer and make watertight joint connections. Remove material in accordance with subsection 204.03.B.

If tapping an existing pipe, cut an opening in the receiving pipe at least 6 inches larger than the outside diameter of the inlet pipe. Insert the inlet pipe and cut flush with the inner wall of the receiving pipe. Pack a layer of mortar at least 3 inches thick around the inlet pipe and strike smooth with the inner wall of the receiving pipe. Encase the inlet pipe on the outside of the connection with concrete to provide bearing under the pipe. Repair or replace existing pipe damaged by Contractor tapping operations at no additional cost to the Department.

Do not direct tap sewer inlet pipes with outside diameters greater than half the inside diameter of the trunk sewer. Construct a manhole structure for these taps in accordance with section

403. Obtain the Engineer's approval before using other methods for tapping existing sewers.

E. **Sewer Bulkheads.** Construct sewer bulkheads using Grade 3000 concrete or brick or block masonry. Extend the bulkhead at least 1 foot into the pipe from the inner wall of the drainage structure. Construct masonry bulkheads in accordance with subsection 403.03.A.

F. **Backfilling.** Backfill in accordance with subsection 401.03.D.

G. **Sewer Jacked in Place.** Jack sewers in place in accordance with subsection 401.03.G.

H. **Disposal of Surplus Material.** Take possession and dispose of surplus material in accordance with subsection 205.03.P.

I. **Cleanout.** Maintain storm sewers installed on the project. Verify installed sewers are free of silt, debris, and other deleterious material at the time of final acceptance and in accordance with section 209.

J. **Video Inspection of Sewer Pipe.** Use closed circuit television to inspect required storm sewers. Dewater or divert flow in sewers for inspection. Video inspection is not required for extensions of existing catch basin leads less than 20 feet.

After backfilling and compacting the trench, and within 10 working days prior to pavement surfacing or completion of final grade, conduct the inspection of sewers under pavement, unless otherwise approved by the Engineer.

For sewers not under pavement, after backfilling and compacting the trench, conduct the inspection as close to project completion as possible, but allow time for corrective action determined by the video inspection and directed by the Engineer.

1. **Traffic Control.** Obtain the Engineer's approval of traffic control measures at least 5 days before beginning work. Propose a traffic control plan in accordance with the MMUTCD and the maintaining traffic plans included in the contract.

   Unless otherwise approved by the Engineer, keep traffic lanes open. For necessary lane or shoulder closures, use traffic control measures in accordance with the traffic control plan.

2. **Equipment.** Use a camera designed and constructed for inspecting sewers, equipped with the following features:

   a. A pan and tilt head external to the main body of the camera to allow inspection of the sewer joints and cracks or other defects;
   b. Lighting to allow a clear picture of the perimeter of the pipe; and
   c. Underwater operation, capable of producing a picture quality satisfactory to the Engineer.
   d. Show or document camera magnification at all times in video.

If the Engineer determines the video quality is not satisfactory, re-inspect the pipes to obtain acceptable results, at no additional cost to the Department.

Use continuous running video capable of recording audio and video information. Include the date, the month, day and year, and camera location. Provide a continuous record of the sewer section, from manhole to manhole or from end to end. Use high quality, color, digital format at a standard play speed. Obtain the Engineer's approval before using other recording media.

3. **Sewer Flow Control.** Provide flow control to bring the depth of flow in the sewer pipe within the range specified in subsection 402.03.J.3.a for video inspection. Submit to the Engineer for approval, the proposed method of sewer flow control before starting work.

   a. **Depth of Flow.** Lower the depth of flow in the sewer during the videotaping operation to less than 2 inches. Reduce flow by plugging or blocking the flow, or by pumping the flow and bypassing the pipe section during inspection, as approved by the Engineer.

   b. **Plugging or Blocking.** Insert a sewer line plug into the line upstream of the section undergoing inspection. Use a plug designed to allow the release of portions of the flow. During video inspection, reduce the flow depth to 2 inches. Restore normal flow after completing the work. Meter flow discharge to prevent erosion.

   c. **Pumping and Bypassing.** For pumping and bypassing, supply the pumps, conduits, and other equipment to divert the flow around the sewer section undergoing inspection. Provide a bypass system with a capacity to handle existing flow plus additional flow that may occur during a rain event. Provide the labor and supervision required to set up and operate the pumping and bypassing system.

   d. **Flow Control Precautions.** If the flow in a sewer line is plugged, blocked, or bypassed, protect the sewer lines from damage that may result from sewer surcharging. Do not cause flooding or damage to public or private property while controlling sewer flow.

4. **Procedure.** Move the camera through the line at a rate no greater than 0.5 feet per second, stopping as required to document the joint and pipe conditions. Use winches, cable, powered rewinds, or other devices that do not obstruct the camera view or interfere with proper documentation of the pipe conditions.

   Adjust the camera to travel above the level of the flow in the pipe. If the camera encounters a dip in the pipe such that the water rises above the springline of the pipe, or if the camera lens becomes submerged, withdraw the camera and re-insert it from the other end as far as possible. Do not back the camera into a pipe undergoing inspection.

   Measure the distance to the location of defects above ground using a meter device. The Engineer will not allow marking defect locations on the cable to measure the distance to

defects. Provide a distance meter with an accuracy within 1 foot and check using a walking meter, roll-a-tape, or other device.

5. **Documentation.** Provide digital format of inspection to the Engineer. Include a written log of damages or installation defects, including pipe deformation, cracking, joint separation, corrosion, perforation or other features identified in the video. Provide digital copy of the log to the Engineer. Locate the damage or defect by meter marking of the video in the inspection log. Label the videos to describe the reaches of sewer or culverts contained in the videos, including street location and manhole numbers. If manhole numbers are not provided, assign a numbering system to allow identification in the inspection report and video.

402.04. Measurement and Payment.

Pay Item	**Pay Unit**
Sewer, Cl __, __ inch, Tr Det __	Foot
Sewer, Reinf Conc Ellip, (shape) Cl __, (rise) by (span) inch, Tr Det __	Foot
Sewer, Cl __, __ inch, Jacked in Place	Foot
Sewer Tap, __ inch	Each
Sewer Bulkhead, __ inch	Each
Trench Undercut and Backfill	Cubic Yard
Dewatering System, Trench	Foot
Video Taping Sewer and Culv Pipe	Foot

A. **Sewer and Sewer, Reinforced Concrete Elliptical.** The Engineer will measure **Sewer** and **Sewer, Reinf Conc, Ellip**, of the size, class, and trench detail required, in place from center to center of manholes, catch basins, or inlets. The unit price for **Sewer** and **Sewer, Reinf Conc, Ellip** includes the cost of excavation, backfill, and geotextile blanket.

B. **Sewer, Jacked in Place.** The Engineer will measure **Sewer, Jacked in Place**, of the size and class required, by length, as determined by multiplying the number of units jacked by the commercial laying length. The unit price for **Sewer, Jacked in Place** includes the cost of excavating the pit; providing and installing sheeting, bracing, and other safety devices; providing jacking equipment; drainage and dewatering; and other items associated with the operation.

C. **Sewer Tap.** The Engineer will measure **Sewer Tap**, based on the inlet pipe size required, by each tap into an existing system. If tapping an existing sewer line using a drainage structure, the Department will pay for one sewer tap in addition to the drainage structure.

D. **Sewer Bulkhead.** The Engineer will only measure sewer bulkheads for storm sewers with a diameter larger than 12 inches. The cost of constructing sewer bulkheads for pipes with a diameter less than or equal to 12 inches, or constructed as part of abandoning or removing drainage structures as shown on the plans, is included in the unit prices for related pay items.

The Department will pay separately for bulkheading pipes greater than 12 inches.

E. **Trench Undercut and Backfill.** The Engineer will measure **Trench Undercut and Backfill** by calculating the volume from the length, depth, and width of undercut authorized by the Engineer and shown on the plans. The Engineer will not make allowance for sloping the sides of the trench. The unit price for **Trench Undercut and Backfill** includes the cost of excavation and disposal of material; and providing, placing, and compacting 6A, 17A, or 34R aggregate to the bottom of trench elevation shown on the plans.

F. **Rock Excavation.** The Engineer will measure and the Department will pay separately for rock excavation in accordance with subsection 205.04.

G. **Dewatering System, Trench.** If the contract does not include a pay item for **Dewatering System, Trench** and the Contractor uses a dewatering system, the Department will not pay separately for the system, but will consider the cost to be included in the unit price for related pay items.

H. **Trenchless.** The Engineer may authorize trenchless methods, in place of open-cut construction methods. The Department will delete, or proportionally reduce pay item quantities required for corresponding open-cut construction from the contract if the Engineer authorizes trenchless methods. The Department will not make an adjustment in the pay items of **Minor Traf Devices** or **Traf Regulator Control.**

Payment for the work performed by trenchless methods will not exceed the unit price bid for the open-cut method.

If the Engineer authorizes trenchless installation **Obstructions** will be removed in accordance with subsection 718.03.F.2. Additional payment or delays for removal of obstructions will not be considered.

I. **Video Taping Sewer and Culvert Pipe.** The unit price for **Video Taping Sewer and Culv Pipe** includes the cost of dewatering, flow control, video inspection, and documentation.

The Department will pay separately for traffic maintenance and control in accordance with subsection 812.04.

J. **Obstructions.** Engineer will measure, and the Department will pay for the removal of obstructions, which require the use of special procedures at the unit price for **Obstruction Removal**, in accordance with subsection 718.04.D.

Section 403. DRAINAGE STRUCTURES

403.01. Description. This work consists of adjusting, constructing, or temporarily lowering drainage structures and cleaning existing drainage structures and leads as directed by the Engineer.

Drainage structures include manholes, catch basins, leaching basins, inlets, and drop inlets.

Drainage Structure. Includes concrete footing or precast sump. Used for access to new or existing sewers with a diameter no greater than 48 inches.

Precast Manhole Tee and Manhole Riser. Used for access to new sewers with diameters of at least 42 inches.

Manhole Base, Type 1 or Type 2, and Manhole Riser. Used for access to new or existing sewers with a diameter of at least 48 inches. Manhole Base Type 1 may be substituted for Precast Manhole Tees.

403.02. Materials. Provide materials in accordance with the following:

Granular Material Class II, III 902
Steel Reinforcement..... 905
Miscellaneous Metal Products 908
Castings 908
Culvert, Sewer Pipe, and Box Sections 909
Geosynthetics 910
Masonry Units 913
Concrete, Grade 3000..... 1004
Mortar Type R-2 1005

Provide cast-in-place or precast concrete construction for sanitary sewer manholes.

Provide structural steel plate, at least ½ inch thick, for temporary lowering of drainage structures that span 72 inches, or less. Verify that plates cover the entire drainage structure with a bearing surface of at least 12 inches. Submit to the Engineer, structural calculations prepared by a professional engineer, licensed in the state of Michigan, for plates that span greater than 72 inches.

Provide leveling course hot mix asphalt (HMA) for patching during the temporary lowering operations, or other HMA mixture as approved by the Engineer.

403.03. Construction.

A. **Constructing, Adjusting, and Temporary Lowering of Drainage Structures, Precast Manhole Tees, Manhole Bases, and Manhole Risers.**

1. **Excavation.** Excavate for constructing, adjusting, and temporarily lowering drainage structures, precast manhole tees, manhole bases and manhole risers in accordance with subsection 206.03.A.

2. **Concrete Construction.** Construct concrete portions of drainage structures in accordance with subsection 706.03. Do not cast drainage structures if the concrete temperature is above 90 °F.

3. **Placing Brick and Block Masonry.** Do not place masonry with mortar when the ambient air temperature is 36 °F or less, unless approved by the Engineer. Remove and replace work damaged by frost. Apply a ½ inch thick plaster coat of mortar to the outer surface of structures, and to the inner surface below the outlet flow line on catch basins with traps or sumps. Place the first set of bricks or blocks on a full bed of mortar. Lay brick or block in courses with uniform mortar joints ½ inch thick, within ⅛ inch of depth. Stagger joints by half the length of the brick or block on adjoining courses. Place courses level unless otherwise required. Strike and point joints so the exposed surface is smooth. Rake joints and wet brick or block before placing the plaster coat. Allow the brick or block surface to dry to provide for proper bonding of the plaster coat.

   Wet the brick. Allow the brick surface to dry to allow the brick and mortar to bond. Use of broken or chipped brick on the faces of the structure is prohibited. Provide a course made of headers, at least every seventh course. Make closures with brick lengths no less than the width of a whole brick.

4. **Precast Reinforced Concrete Units.** Use poured-in-place concrete, in accordance with subsection 403.03.A.2, or precast concrete footings. Construct precast reinforced concrete units in accordance with the contract. Seal the joints with mortar in accordance with subsection 403.03.A.3 or use butyl rubber sealant that conforms to ASTM C990. Support precast concrete footings on a 6-inch subbase of compacted granular material Class II.

5. **Steel Reinforcement.** Install steel reinforcement in accordance with subsection 706.03.

6. **Inlet and Outlet Pipes.** Place and compact backfill around the manhole base or sump to provide bedding for inlet and outlet pipes.

   Extend inlet and outlet pipes through the outside wall surface of the manhole a sufficient length to allow for pipe connections. Construct masonry around pipes and seal with mortar or other product approved by the Engineer to prevent leakage.

7. **Backfilling.** Backfill in accordance with subsection 401.03.D.

   Stage backfilling to coordinate with the construction sequencing of the structure as necessary.

8. **Temporary Lowering of Drainage Structures.** Lower drainage structures before milling the pavement.

   Record the location of the structure so each cover can be reinstalled at its original location. Remove the existing frames and covers and match mark them for later identification and placement. Salvage and safely store frames and covers. Repair the existing structure to allow uniform contact of the steel plate to the top of the structure. Place and compact the HMA for patching in accordance with section 501.

9. **Protection During Construction.** Install inlet protection devices in accordance with section 208 and as approved by the Engineer, when working around drainage structure.

B. **Drainage Structure Covers.** Provide and install new covers, including frames and grates, on new or existing structures as required. Place castings on a full mortar bed.

C. **Adjusting Drainage Structure Covers.** Adjusting drainage structure covers applies when the new elevation of the cover requires a vertical change of no greater than 6 inches. Before placing the HMA top course or overlay, make final adjustments to drainage structure covers within the HMA pavement section, if only applying one course. Adjust the cover to the required elevation by supporting it on one of the following:

1. Metal ring adjustor,
2. Precast concrete adjusting ring,
3. Masonry in a full mortar bed, or
4. Alternate adjustor selected from the Qualified Products List.

Hold adjusted covers in place. Remove and replace the adjacent pavement, curb, or curb and gutter to match the existing grades or the required new elevations.

D. **Additional Depth of Adjusting Drainage Structures.** Additional depth of adjusting drainage structure covers applies when a drainage structure cover is adjusted more than 6 inches from the existing cover elevation due to a change in elevation of the roadway or when alterations to the drainage structure exceed 6 inches regardless of the change in cover elevation. Remove damaged or unsound portions of the structure, as directed by the Engineer, and adjust as required.

E. **Drainage Structure Taps.** Make connections to existing drainage structures owned by counties, municipalities, or drain commissions, in accordance with the owner’s regulations and the contract. If a conflict exists between the owner's regulations and these specifications, the owner's requirements take precedence.

If tapping an existing drainage structure, cut an opening into the receiving structure at least equal to the outside diameter of the inlet pipe plus 6 inches and insert the pipe. Pack a layer of mortar at least 3 inches thick around the inlet pipe and strike smooth with the inner wall of the receiving structure. Repair or replace existing drainage structure damaged by Contractor operations during tapping at no additional cost to the Department.

Tap directly to a sewer or culvert in accordance with subsection 402.03.D.

F. **Cleanout.** Maintain catch basins, manholes, leaching basins, and inlets installed on the project. Ensure installed catch basins, manholes, leaching basins, and inlets are free of silt, debris, and other deleterious material at the time of final acceptance.

G. **Cleaning Existing Drainage Structures and Leads.** Before starting work, the Engineer will determine the condition and will identify the areas on the project that require cleaning of existing drainage structures and leads.

First, clean the downstream drainage structure nearest the trunk sewer and place a temporary bulkhead so the trunk sewer remains clear. Clean upstream drainage structures and leads only after cleaning and bulkheading the downstream drainage structure.

Clean the drainage structures and leads of sand, silt, and debris and prevent further contamination of the leads.

Dispose of the waste generated from the drainage structure or drainage structure lead cleanout operation using either Disposal Alternate A, or Disposal Alternate B, in accordance with this subsection.

If the Contractor suspects the waste generated is non-hazardous contaminated material or hazardous contaminated material, notify the Engineer. If testing shows the material is a hazardous waste as defined in Part 111, Hazardous Waste Management, MCL 324.11101 et seq., immediately notify the Engineer.

1. **Disposal Alternate A.**

    a. **Solid Waste Phase.** Solid waste disposal rules require that the waste have no releasable liquids. Dispose of the solid waste at a Type II landfill. The landfill may require testing before accepting the waste. Provide disposal documentation from the Type II landfill to the Engineer.

    b. **Liquid Waste Phase.** Dispose of the liquid waste using one of the following options:

    Option 1 – Evaporate the liquid waste by use of drying beds, decanting stations, or similar systems that contain the solids during evaporation.

Option 2 – Place liquid waste in a sanitary sewer system with the sanitary sewer owner's approval. Provide a copy of the owner's approval to the Engineer.

Option 3 – Pump the majority of clear liquid from the drainage structure and leads without disturbing the solids. Discharge this clear liquid to:

i. A sanitary sewer or combined sanitary and storm system with the sewer owner's approval;
ii. The curb and gutter such that it re-enters and is completely contained within the storm sewer system and does not directly discharge into the waters of the State; or
iii. An area of undisturbed, well vegetated ground at a rate that does not result in excessive ponding, runoff, or soil erosion.

Dispose of the remaining solid and liquid phase as waste using Disposal Alternate A, either Option 1 or Option 2, or Disposal Alternate B.

2. **Disposal Alternate B.** Use a Licensed Liquid Industrial Waste Hauler to transport the waste generated and dispose of it in accordance with Part 121, Liquid Industrial By-Products, MCL 324.12101 et seq.. Provide the Engineer a copy of the transport manifest.

403.04. Measurement and Payment.

Pay Item	**Pay Unit**
Dr Structure, __ inch dia	Each
Dr Structure, Add Depth of __ inch dia, 8 foot to 15 foot	Foot
Dr Structure, Add Depth of __ inch dia, more than 15 foot	Foot
Drop Inlet, Type __	Each
Mh, Precast Tee, Cl __, __ inch	Each
Mh Base, __ inch, Type __	Each
Mh Riser	Foot
Dr Structure Cover, Type __	Each
Dr Structure Cover, Adj, Case __	Each
Dr Structure, Adj, Add Depth	Foot
Dr Structure, Tap, __ inch	Each
Dr Structure, Temp Lowering	Each
Dr Structure, Cleaning	Each
Dr Structure Lead, Cleaning, __ inch	Foot

A. **Drainage Structures Excluding Drop Inlets.** The Engineer will measure the depth of drainage structures, with the exception of drop inlets, from the top of the masonry to the top of the concrete footing.

The unit price for **Dr Structure**, of the diameter required includes the cost of concrete footing and no greater than 8 feet of the drainage structure depth. The unit price for **Dr Structure** includes the cost of temporary or final grade adjustments of the structure.

The unit price for **Dr Structure, Add Depth, 8 foot to 15 foot**, of the diameter required includes the cost of drainage structure portions, greater than 8 feet deep, but no greater than15 feet deep.

The unit price for **Dr Structure, Add Depth, more than 15 foot**, of the diameter required includes the cost of drainage structure portions greater than 15 feet deep.

The unit price for new structures includes the cost of cleaning new drainage structures.

B. **Drop Inlets.** The Engineer will measure drop inlets as units, of the type required, regardless of depth.

The Department will pay separately for pipe leading from the drop inlet to a sewer or catch basin. The cost of pipe from drop inlets, Type 1 is included in the unit price for related sewer pay items, in accordance with subsection 402.04. The cost of pipe from drop inlets, Type 2, as shown in the special detail is included in the unit price for the related sewer pay item.

The Department will pay for a sewer tap or drainage structure tap, in accordance with subsection 402.04, only if tapping the sewer or encased sewer into an existing drainage system is required.

C. **Manhole Base and Riser.** The Engineer will measure **Mh Riser** vertically from above the collar of the **Mh, Precast Tee**, or above the **Mh Base** to the top of the riser.

The unit price for **Mh Base, Type 1** includes the cost of cutting access holes in the sewer.

If the Contractor uses **Mh Base, Type 1** in place of **Mh, Precast Tee** and the contract does not include the pay item **Mh Base, Type 1**, the unit price for **Mh, Precast Tee** includes the cost of installing a Type 1 manhole base.

D. **Drainage Structure Covers.** When new covers are placed on existing structures, the Engineer will measure and the Department will pay for **Dr Structure Cover, Adj, Case __** in addition to the new cover.

The unit price for **Dr Structure Cover, Adj, Case 1** includes the cost of the following:

1. Sawcutting existing pavement, curb, and curb and gutter;
2. Adjusting the cover up or down, no greater than 6 inches; and
3. Removing and replacing pavement adjacent to the adjusted cover in accordance with Standard Plan R-37 series.

The Department will pay separately for removing and replacing curb and gutter adjacent to the adjusted structure.

The Department will only pay for **Dr Structure Cover, Adj, Case 2** for structure adjustments located outside existing pavement, curb, and curb and gutter.

The unit price for **Dr Structure Cover, Adj**, of the case required includes the cost of repairs for uniform contact of temporary steel plate to the top of structures.

The Engineer will measure **Dr Structure, Adj, Add Depth**, of the required diameter and depth, beginning 6 inches from the level of the existing structure, in the direction of adjustment, to the limit of the additional adjustment depth. If the contract includes a pay item for **Dr Structure, Adj, Add Depth**, the contract will also include a pay item for **Dr Structure Cover, Adj**, of the case required. The unit price for **Dr Structure, Adj, Add Depth** includes the cost of drainage structure taps, within the limits of the adjustment.

The Department will pay for drainage structure taps outside the limits of the adjustment as **Dr Structure, Tap**. The Department will pay for taps to existing sewers as **Sewer Tap**, of the size required, in accordance with subsection 402.04.

E. **Drainage Structure, Temporary Lowering.** The unit price for **Dr Structure, Temp Lowering** includes the cost of the following:

1. Match marking;
2. Removing, salvaging, and transporting castings to and from site;
3. Storing the existing structure castings;
4. Plating the structure;
5. HMA patching; and
6. Removing the plate and HMA patching materials for final adjustment.

The Department will pay separately for the final adjustments to drainage structures. The unit price for **Dr Structure Cover, Adjust, Case 1** includes the cost of removing pavement to lower the structure.

The cost of repairs is included in unit price for the related drainage structure adjustment pay item.

F. **Cleaning Existing Drainage Structures and Leads.** The unit price for **Dr Structure, Cleaning** includes the cost of testing for disposal, hauling and disposing of generated waste.

The unit price for **Dr Structure Lead, Cleaning**, of the size required includes temporary bulkheads and the cost of testing for disposal, hauling and disposing of generated waste.

The cost for cleaning out existing sewers, plugged by Contractor operations, is included in related pay items.

If not included in the contract, the Department will pay for disposal of non-hazardous contaminated material and hazardous contaminated material in accordance with subsection 109.05.

Section 404. UNDERDRAINS

404.01. Description. This work consists of constructing and installing underdrains, foundation underdrains, and underdrain outlets.

404.02. Materials. Provide materials in accordance with the following:

Granular Material Class II AA 902
Open-Graded Aggregate 34R 902
End Sections 909
Pipe for Underdrains 909
Rodent Screens 909
Underdrain Outlets 909
Drainage Marker Posts 909
Sod 917
Topsoil 917
Mortar, Type R-2 1005

A. **Pipe.** Provide geotextile-wrapped perforated pipe and tubing for underdrains, except if using with open-graded backfill material. Provide non-perforated pipe and tubing, not wrapped with geotextile for underdrain outlets. Provide the following slot or hole size and water inlet area for pipe if using steel furnace slag for open-graded drainage course.

Table 404-1
Pipe Opening Sizes for Steel Furnace Slag Open-Graded Drainage Course

Opening Type	Size
Slot width	$^{1}/_{16}$ in – ⅛ in
Hole diameter	⅛ in – $^{3}/_{16}$ in
Water inlet area (min)	2 in²/ft of tubing

B. **Aggregate for Trench Backfill.** Provide open-graded aggregate 34R to backfill the trench for open-graded underdrain. Provide granular material Class II AA as backfill for other underdrains and underdrain outlets.

C. **Outlet Endings.** Provide a concrete ring, a steel end section, or a concrete end section for the outlet ending.

404.03. Construction. The plans will show the locations for underdrain and underdrain outlets, or will establish a miscellaneous quantity of pipe for use on the project. The plans will show, or the Engineer will determine, the line and grade of the underdrain. Place the outlets at the intervals shown on the plans and ensure the outlets drain.

A. **Trench Excavation.** Excavate underdrain trenches using a wheel or chain trencher, or other trenching method approved by the Engineer. Grade trench bottoms to the shape of the underdrain pipe.

Line trenches for open-graded underdrains with geotextile blanket as required.

B. **Laying Underdrains.** Place the underdrains to the line and grade shown on the plans or established by the Engineer. Ensure a firm bearing along the length of the pipe. Place compatible end caps on the upgrade ends of the underdrain pipes. Remove and re-lay damaged or displaced pipe.

C. **Connections.** Select fittings and connection methods, in accordance with the underdrain system manufacturer's recommendations, to prevent pipe separation.

Do not penetrate the inside diameter of the pipe with the self-tapping screws by more than ⅛ inch. Wrap fittings with geotextile blanket and seal the geotextile to the outlet pipe with waterproof tape.

D. **Backfill and Compaction.** Place backfill in trenches after the Engineer approves the underdrain line and grade.

1. **Foundation, Bank and Subgrade Underdrains, and Underdrain Outlets.** Backfill using granular material Class IIAA.

   Place the granular material around the pipe to cover the drain with at least 12 inches of material. Place the remaining backfill in layers no greater than 12 inches. Compact the trench backfill material within the influence of the roadbed to 95 percent of the maximum unit weight. Compact trenches outside the roadbed as directed by the Engineer.

   If the contract calls for open-graded subgrade underdrain and open-graded bank underdrain, place the open-graded aggregate 34R as shown on the plans for open-graded underdrains.

2. **Open-Graded Underdrains.** Backfill pipe with open-graded aggregate 34R. After placing the backfill, compact the backfill and the surrounding grade material with a vibrating plate compactor. Begin compaction along the shoulder side of the underdrain and progress toward the pavement. Do not operate the compactor directly above the underdrain.

   Maintain the exposed underdrain and backfill to prevent contamination.

   Remove and replace contaminated backfill material as determined by the Engineer at no additional cost to the Department. Clear obstructed underdrain as determined by the Engineer at no additional cost to the Department.

E. **Underdrain Outlet.** Lay underdrain outlets on at least a 4 percent grade and install the underdrain outlet at least 4 inches above the receiving ditch or sewer flow line. The Engineer may waive the percent grade requirement after determining that it is not practical to meet both the percent grade and the outlet elevation requirements. Connect underdrain outlet pipe to the

underdrain in accordance with Standard Plan R-80. The use of wyes, tees or other similar fittings is not acceptable. Do not backfill the outlet trench until approved by the Engineer. Install underdrain outlets within 48 hours of installing adjoining longitudinal underdrains. Mark and maintain the outlets until final acceptance of the work.

F. **Outlet Endings.** Place the outlet endings as shown on the plans or as directed by the Engineer. Excavate areas requiring sod to at least 4 inches deep and place topsoil and sod in accordance with subsection 816.03. Install drainage marker posts in accordance with subsection 401.03.F.

Mark the locations of outlet endings on the adjacent shoulder if installing underdrains in conjunction with constructing or resurfacing concrete or HMA shoulders. Mark locations with a ½-inch deep, 4 inch by 6 inch depression. Place the long edge of the depression perpendicular to the edge of the shoulder. The Engineer may approve the following alternative methods of marking locations.

1. Stencil markers in concrete shoulders after texturing.
2. Form markers in HMA shoulders during finish rolling. Obtain the Engineer's approval of forming method prior to beginning work.

G. **Cleanout.** Ensure installed underdrains and outlets are free of silt, debris, and other deleterious material at the time of final acceptance.

H. **Video Inspection of Underdrains.** The Department will perform video inspection of underdrains, underdrain outlets, and outlet endings after installation is complete.

The Department will perform video inspections of open-graded underdrains after the mainline pavement placement is complete, but before shoulder paving.

Submit a log detailing the locations of the drain outlets installed on the project to the Engineer. Include, in the drain outlet log, locations for the bank drain outlets, subgrade and subbase underdrain outlets, and open-graded underdrain outlets.

1. **Deficiencies.** The Engineer will require corrective action, including excavation and repair or removal and replacement of the underdrain or underdrain outlets, if video inspection reveals any of the following deficiencies:

    a. Crushed pipe,
    b. Separated joints,
    c. Plugged underdrain or underdrain outlet pipe,
    d. Standing water greater than half the pipe diameter for greater than 25 feet, or
    e. Other defects in materials or workmanship as determined by the Engineer.

2. **Corrective Action.** Obtain approval from the Engineer for the repair or removal and replacement method before beginning corrective action. Complete corrective action within 10 working days of video inspection completion, or other date as approved by the Engineer.

   Complete the following corrective action at no additional cost to the Department:

   a. Excavate;
   b. Repair or remove and replace defective underdrain, underdrain outlets and outlet endings;
   c. Backfill excavated areas;
   d. Replace and compact overlying fill, aggregate base separator course, and open-graded drainage course materials;
   e. Replace geotextile separator as required; and
   f. Replace finished shoulder or pavement material in accordance with the contract.

404.04. Measurement and Payment.

Pay Item	Pay Unit
Underdrain, Subgrade, __ inch	Foot
Underdrain, Bank, __ inch	Foot
Underdrain, Subgrade, Open-Graded, __ inch	Foot
Underdrain, Bank, Open-Graded, __ inch	Foot
Underdrain, Fdn, __ inch	Foot
Underdrain, Subbase, __ inch	Foot
Underdrain, Pipe, Open-Graded, __ inch	Foot
Underdrain, Edge of Pavt, __ inch	Foot
Underdrain Outlet, __ inch	Foot
Underdrain, Outlet Ending, __ inch	Each

The Engineer will measure underdrains in place.

The Engineer will measure **Underdrain Outlet**, of the size required, in place from the underdrain to the center of a drainage structure or from the underdrain to the end of the outlet pipe. In addition to work specified for individual pay items, the unit prices for the relevant underdrain and underdrain outlet pay items include the cost of the following:

1. Excavating the trench;
2. Providing and placing the pipe and fittings;
3. Providing, placing, and compacting the backfill material; and
4. Disposing of surplus material excavated from the trench.

The Department will not consider claims for additional compensation for time required to repair, or remove and replace deficient underdrain, underdrain outlets, and overlying materials.

A. **Subgrade, Bank, Foundation, and Subbase Underdrains.** The unit prices for **Underdrain, Subgrade, Underdrain, Bank, Underdrain, Fdn**, and **Underdrain, Subbase**, of the sizes required include the cost of providing the pipe and fittings with a geotextile wrap.

B. **Underdrain, Pipe, Open-Graded.** The unit price for **Underdrain, Pipe, Open-Graded**, of the size required, includes the cost of providing and lining the trench with geotextile blanket.

C. **Underdrain Outlet.** The unit price for **Underdrain, Outlet**, of the size required, includes the cost of the following:

1. Locating installed outlets;
2. Maintaining the end of the outlet pipe or end section clear of obstructions; and
3. Providing and installing temporary tie-downs.

D. **Underdrain, Outlet Ending.** The unit price for **Underdrain, Outlet Ending**, of the size required, includes the cost of the following:

1. Excavating the area at the end of the outlet;
2. Providing and placing the concrete ring, steel end section, or concrete end section;
3. Providing and installing the rodent screen, if required; and
4. Disposing of surplus excavated material.

The Engineer will measure, and the Department will pay for pipe or tubing used in or through the outlet ending as **Underdrain Outlet**. The unit price for **Underdrain, Outlet Ending** includes the cost of marking the outlet ending locations on the adjacent shoulder.

The Engineer will measure, and the Department will pay for drainage marker posts in accordance with subsection 401.04.

Section 405. PUMP STATION CONSTRUCTION

405.01. Description. This work consists of constructing pump stations in accordance with the contract.

405.02. Materials. Provide material as required by the contract.

405.03. Construction. Construct pump houses as required by the contract.

405.04. Measurement and Payment. The Engineer will measure and the Department will pay for pump houses in accordance with the contract.

Section 406. PRECAST THREE-SIDED, ARCH, AND BOX CULVERTS

406.01. Description. This work consists of the following:

A. Designing, load rating, fabricating, and constructing precast concrete three-sided, arch, precast concrete box culverts and other precast elements;
B. Providing dewatering;
C. Maintaining the water flow during construction stages;
D. Providing and installing gaskets, segment anchoring and geotextile fabric to seal culvert joints;
E. Designing, fabricating and constructing connections; and
F. Designing, installing, maintaining, and removing construction dams including dewatering and bypass pumping to maintain flows.

406.02. Materials. Provide materials in accordance with the following:

Cement Type I, Type III 901
Granular Material Class II, III, IIIA 902
Coarse Aggregate 6A, 6AA, 17A 902
Fine Aggregate 2NS 902
Open-Graded Aggregate 34R 902
Concrete Admixtures 903
Curing Compound 903
Fly Ash 903
Asphaltic Materials 904
Steel Reinforcement 905
Structural Steel 906
Miscellaneous Metals 908
Sealers for Culvert Joints 909
External Rubber Gaskets 909
Geosynthetics 910
Filter Bags 910
Sand and Stone Bags 916
Concrete 1004
Mortar, Type R-2 1005

Provide natural coarse aggregate for 6A, 6AA, and 17A, in accordance with subsection 902.02. Provide aggregate with a gradation meeting Michigan Series 6AA or 17A, the physical requirements of 6AA, and not exceeding the following nominal maximum size requirements:

A. One-fifth the narrowest dimension between forms,
B. One-third the depth of slabs, and
C. Three-quarters the minimum clear spacing between individual reinforcing bars or wires.

The Freeze-Thaw Dilation, percent per 100 cycles, must not exceed 0.030 percent.

Provide steel inserts zinc coated in accordance with ASTM B633 for service condition 4 or a Department-approved equal.

Provide epoxy coated steel in headwalls, wingwalls, apron, curtainwall and collars.

Select a precast concrete three-sided or arch culvert from within the categorized types on the QPL, and as shown on the plans. All manufacturers must be certified by the Precast/Prestressed Concrete Institute (PCI), the National Precast Concrete Association (NPCA), or the American Concrete Pipe Association (ACPA).

406.03. Construction.

A. **Design.** Provide a dewatering and/or bypass pumping plan that complies with the EGLE permit requirements and MDOT Standard Plans and submit it, to the Engineer for review 7 days before the installation of the system.

A professional engineer, licensed in the state of Michigan, must seal the design for precast three-sided, arch, box culverts, connections, and other precast elements**.** Sheeting and cofferdam design must be in accordance with subsection 704.03. Provide culverts with the rise, span, skew angle, and minimum waterway area shown on the plans. Obtain the Engineer's approval for larger spans or rises. Submit the design to the Engineer for review and approval at least 14 calendar days prior to fabrication. When HL-93 modified live load is specified, apply HL-93 live load in accordance with the AASHTO *LRFD Bridge Design Specifications* with the following exceptions:

a. Increase the load of each axle of the design truck, shown in Figure 3.6.1.2.2-1 of the AASHTO *LRFD Bridge Design Specifications*, by 20 percent;
b. Increase the design lane load, specified in Article 3.6.1.2.4 of the AASHTO *LRFD Bridge Design Specifications*, by 20 percent; and
c. Replace the design tandem, specified in Article 3.6.1.2.3 of the AASHTO *LRFD Bridge Design Specifications,* with a single 72-kip load.

Use a Class 2 exposure condition when satisfying the provisions of article 5.6.7 in the AASHTO *LRFD Bridge Design Specifications*.

1. **Precast Concrete Three-Sided and Arch Culverts.** Design the precast three-sided or arch culvert in accordance with AASHTO *LRFD Bridge Design Specifications* for HL-93 modified live load and ASTM C1504. Base the design on the loads shown on the plans. Investigate all load factor combinations to produce the positive and negative extremes (minimum load factors applied to loads that reduce the force effect being investigated). The design must identify the maximum factored inward and outward horizontal forces, and vertical forces at the base of the culvert wall. Perform plan modifications, including design, to accommodate the actual precast units being used. The maximum factored horizontal and vertical forces must be less than the horizontal and vertical capacities of the footings, as shown on the plans.

Verify that the footing dimensions, including keyway size, and footing concrete compressive strength, as shown on the plans, are compatible with the culvert design.

2. **Precast Concrete Box Culverts.** Design precast box culverts less than 10 feet in span length measured along the centerline of the roadway in accordance with the AASHTO LRFD *Bridge Design Specifications* and ASTM C1577. As an alternative to using the design tables in ASTM C1577, other refined software programs may be approved by the Engineer. Programs to design culverts may be used provided the design includes HL-93 live load without lane load and dynamic load allowance as defined in the AASHTO LRFD *Bridge Design Specifications*.

   Design precast box culverts greater than or equal to 10 feet in span length measured along the centerline of the roadway in accordance with the AASHTO LRFD *Bridge Design Specifications* for HL-93 modified live load.

   Design joints between adjacent box culvert sections in accordance with Section 8 of ASTM C1577 and to accommodate the joint sealing material in accordance with section 914 as applicable.

3. **Precast Concrete Headwalls, Wingwalls, and Aprons.** Design headwalls, wingwalls, and aprons in accordance with the AASHTO LRFD *Bridge Design Specifications* and as specified herein.

   a. **Headwalls.** Design headwalls to resist forces due to earth pressure and vehicle impact in accordance with the contract documents.

   b. **Wingwalls.** Design wingwalls to resist forces due to earth pressures and live loads.

   c. **Aprons.** Coordinate design of aprons with other elements.

4. **Connection.** Design connections in accordance with the AASHTO LRFD *Bridge Design Specifications*. Unless otherwise shown on the plans, bolts used in bolted connections must have a diameter of at least ¾ inch. Field welded connections are not allowed.

B. **Load Rating.** The load rating must be performed by a professional engineer licensed in the state of Michigan.

1. **Load Rating Procedure.** Load rate culverts with a span of at least 10 feet to verify that it can carry legal loads and class A overloads. Measure the span along the centerline of the roadway between inside faces of exterior walls. Perform the load rating using the load and resistance factor rating (LRFR) method in accordance with the AASHTO *Manual for Bridge Evaluation*, the *Bridge Analysis Guide*, and the *Michigan Structure Inventory and Appraisal Coding Guide*. Include a 25 pound per square foot future wearing surface in the load rating. Calculate the following ratings:

a. Federal inventory rating, National Bridge Inventory (NBI) Item 66;
b. Federal operating rating, NBI Item 64;
c. Michigan operating rating, MDOT Item 64M; and
d. Michigan overload class, MDOT Item 193A.

If changes are made during construction, update the load rating for the as-constructed conditions and submit the updated load rating documentation to the Engineer. The updated load rating shall analyze for both the as-constructed conditions and the as-constructed conditions with placement of future wearing surface. MDOT directed changes will be paid for as extra work.

2. **Load Rating Documentation.** Submit the following information to the Engineer in electronic portable document format (PDF) at least 14 days prior to fabrication:

   a. Assumption sheet containing a list of assumptions made in the analysis regarding material properties, vehicle configurations, live load factors, live load distribution, and other factors;
   b. Software calculation input and output;
   c. Manual calculations; and
   d. A complete Bridge Analysis Summary Form.

C. **Working Drawings.** Submit working drawings to the Engineer, for review and approval. Do not begin fabrication until receipt of written approval of the working drawings from the Engineer.

Include the following in the working drawings:

1. Load ratings using as-designed conditions;
2. Design assumptions;
3. Design loads;
4. Design calculations;
5. Culvert dimensions;
6. Fabrication methods;
7. Method of joining adjacent culvert elements;
8. The fabricator's minimum fill depth required for construction traffic over the culvert;
9. Compressive strength requirement prior to removal of forms;
10. Connection details;
11. Dimensions of concrete wingwalls, head walls, curtain walls and aprons;
12. Steel reinforcement lap lengths and development lengths; and
13. Cast-in-place concrete details, including concrete that is paid for separately.

Cast-in-place head walls, wingwalls, aprons, and curtain walls may be used as an alternative to precast sections at no additional cost to the Department.

Identify deviations from the contract on the working drawings. If deviations are not clearly identified, the Department will not consider the deviations as part of the shop drawing approval.

D. **Fabrication.** Do not begin fabrication until the Engineer has approved the design, working drawings and load rating. Do not fabricate box culverts using dry cast methods.

1. **Placement of Reinforcement.** Provide three times the wire diameter, but not less than 1 inch, of concrete cover for welded wire reinforcement. For the reinforcement in the top of the top slab of culverts covered by less than 2 feet of fill, provide at least 2 inches of concrete cover. Assemble reinforcement using a maximum of three layers of welded wire reinforcement.

   A single layer of deformed steel reinforcing bars may be used instead of welded wire reinforcement.

   If using deformed steel reinforcing bars, provide a minimum concrete cover of 2 inches. The ends of the longitudinal reinforcement must be no greater than 2 inches from the ends of the culvert section. Exposure of the ends of longitudinal reinforcement, or spacers used to position the reinforcement, will not be cause for rejection.

2. **Reinforcement Development Length, Splices, and Spacing.** Develop the exterior corner reinforcement and splice reinforcement in accordance with the AASHTO LRFD *Bridge Design Specifications* and ASTM C1577.

3. **Joints.**

   a. **Precast Three-Sided and Arch Culverts.** Provide a 1 inch by 1 inch or ¾ inch by ¾ inch beveled edge on the external surface of the joint formed between the culvert units.

   b. **Precast Box Culverts.** Provide tongue and groove ends.

4. **Concrete.** Proportion and mix cement, aggregate, admixtures, and water to produce a homogeneous concrete that meets the following requirements. Unless otherwise shown on the plans, the precast culvert manufacturer is responsible for the concrete mix design with 28-day compressive strength of at least 5,000 psi, containing 5.5 percent to 8.5 percent entrained air, and maximum slump of 4 inches. If using Type F or Type G admixtures, the Department will allow a maximum slump of 7 inches.

   Place concrete to avoid material segregation and reinforcement displacement. Do not allow concrete to freefall more than 12 inches to the top of the forms.

   Provide internal vibrators capable of visibly affecting the mixture for at least 18 inches from the vibrator. Use mechanical, high-amplitude internal/external vibrators to consolidate the concrete during and immediately after placement. If using epoxy coated or other coated reinforcement, use a vibrator with a rubber coated head.

Move vibrators to prevent forming localized areas of grout. Uniformly space the points of vibration no greater than twice the radius over the visibly effective vibration area. Do not hold internal vibrators against forms or reinforcing steel, and do not use them for flowing or spreading concrete. Do not disturb partially hardened concrete.

Maintain forms, reinforcing steel, and placing equipment clean and free of hardened concrete.

Do not disturb forms or projecting reinforcement after the initial set of the concrete.

If concreting operations extend into the night, light the work area to make operations visible for inspection.

Hand methods for concrete consolidation will be allowed if the Engineer determines vibratory methods are not possible.

Immediately after removing forms, patch air holes larger than ¾ inch diameter and ⅜ inch deep with Type R-2 mortar as directed by the Engineer.

5. **General.** Construct mortar-tight forms with net sections capable of withstanding impacts during placement and or supporting the weight of concrete through curing. Use removable forms in accordance with subsection 706.03.D.3, except Type B surfaces are not allowed.

6. **Curing.** Use one of, or a combination of, the following curing methods:

   a. Low pressure steam-cure the culvert sections in accordance with subsection 708.03.C.12.
   b. Water cure the culvert sections using methods that maintain continuous moisture on the sections for at least 7 days.
   c. Accelerate overnight curing using an external heat source, while minimizing moisture loss from exposed surfaces. Apply the initial heating 2 hours after final concrete placement.
   d. Apply a sealing membrane that conforms to ASTM C309.
   e. Apply a curing compound in accordance with subsection 706.03.N.1.

7. **Handling.** Handle the precast units using a method approved by the fabricator and Engineer. Do not drill holes for handling the precast unit.

   Fill handling holes using one of the following methods before placing backfill:

   a. Fill holes with Type R-2 mortar;
   b. Fill tapered holes with concrete plugs, and secure with Type R-2 mortar, or other approved adhesives; or
   c. Fill holes with neoprene plugs, wedged tightly to eliminate annular space.

   Cover the filled holes with an external grade rubber gasket at least 9 inches by 9 inches, conforming to ASTM C877 or C990, centered over the hole. Use a primer compatible with

the rubber gasket to secure the gasket. Install the gasket in accordance with the manufacturer's recommendations. Cover the gasket with a 24 inch by 24 inch geotextile blanket centered over the gasket.

8. **Product Marking.** Use a method approved by the Engineer, to mark the interior of each precast unit with the following information:

   a. Span and Rise;
   b. Date of fabrication;
   c. Name or trademark of the fabricator; and
   d. Design earth cover.

9. **Steel Reinforcement** Store, protect, handle, field bend, lap, cut and repair reinforcement in accordance with subsection 706.03.E except as required below.

   Place and firmly secure steel reinforcement during concrete placement. Ensure steel reinforcement is free of dirt and excessive rust, loose mill scale, or other deleterious material when placed. Do not vary bar spacing by more than 1/6 of the spacing shown on the plans, except as needed to allow placing anchor bolts and position dowels. Use wire ties to secure bar intersections for the top mat, and other mats where the product of the length and width of bar intersection spacing exceeds 120 square inches. If the product of the length and the width of spacing does not exceed 120 square inches, tie alternate intersections. Do not weld.

   Tie bar laps near each end of the lap. Provide a clear distance from the reinforcement to the concrete surface at least equal to the dimensions shown on the plans, but no more than 25 percent of the dimension.

   Maintain the required reinforcement distances from forms using stays, ties, hangers, bar chairs, or other Department-approved supports. If bar chairs are used they must be plastic or coated metal with a bearing area that prevents penetration into forming material.

10. **Cold Weather Precautions**. Meet the requirements of subsection 706.03.J except specified by the designer and the following below.

    If the National Weather Service forecasts air temperatures below 20°F during the curing period, provide material and heating equipment on the project to protect forms and concrete.

    Do not place concrete if the air temperature is below 40°F, unless form interiors, metal surfaces, and the adjacent concrete surfaces are preheated to at least 40°F. Use only gas-fired burners if heating by direct flame. Do not begin placing concrete if the air temperature is below 35°F unless a specific cold weather quality control plan has been approved by the Engineer.

Insulating the bottom of forms is not required. If the National Weather Service forecasts air temperatures below 40°F for more than 8 consecutive hours during the curing period, protect the top of the freshly cast concrete as soon as possible to maintain a concrete temperature of at least 40°F. Use tightly joined insulating blankets or polystyrene insulation and insulate in accordance with Table 706-1.

Hang tarpaulins, or other Department-approved material from the top of the concrete to enclose the entire protected section. If the temperature falls below 15°F during the curing period, circulate heated air under the enclosed superstructure section. Maintain circulation for the remainder of the protection period required for concrete protected by heating and housing.

E. **Tolerances.**

1. **Internal Dimensions.** Fabricate precast elements so the internal dimensions do not vary from the design dimensions by more than 2 inches. For culverts with haunches, do not vary haunch dimensions by more than ¾ inch from the dimensions shown on the shop drawings.

2. **Slab and Wall Thickness.** Fabricate precast elements so the slab and wall thicknesses do not vary from the dimensions shown on the shop drawings by more than 5 percent or ½ inch, whichever is greater. Slabs and walls thicker than the required dimension will not be cause for rejection unless, in the opinion of the Engineer, the thickness variation prevents joint sealing.

3. **Length of Opposite Surfaces.** Fabricate precast elements so the laying lengths of two opposite culvert section surfaces do not vary by more than 1 inch.

4. **Length of Section.** Fabricate precast elements so the underrun from the required length measures no greater than ½ inch.

5. **Position of Reinforcement.** Position reinforcement within ½ inch of the dimension shown on the shop drawings.

F. **Testing and Inspection.**

1. **Testing.** Test the concrete for compressive strength in accordance with Section 10 of ASTM C1504 for precast three-sided and arch culverts, and Section 10 of ASTM C1577 for precast box culverts.

2. **Workmanship, Finish and Appearance.** Provide a smooth finish on the culvert surfaces, free of fractures.

3. **Repairs.** Repair fabrication imperfections, handling damage, or construction damage to culverts as approved by the Engineer, in accordance with section 712, and at no additional cost to the Department.

4. **Rejection.** The Engineer may reject precast three-sided, arch, and box culverts due to the following:

   a. Defects that indicate imperfect proportioning, mixing, or forming;
   b. Honeycombed or open textured surfaces that would adversely affect the function of the box or bridge sections;
   c. Damaged ends preventing required joint construction;
   d. Concrete that does not attain the required compressive strength;
   e. Out of tolerance dimensions;
   f. Low or high air content; and
   g. Exposed reinforcing steel.

5. **Quality Assurance.** For culvert spans greater than 10 feet, provide the Department access to perform quality assurance inspection. Notify the Engineer at least 2 weeks before beginning fabrication. The Department does not consider this inspection a substitute for the fabricator's quality control requirements.

G. **Installation.**

1. **General.** Construct the wingwalls, headwalls, and aprons for precast concrete culverts with a positive connection to the adjoining precast section as shown on approved working drawings.

   Remove spurs, fins, and excess concrete at joints without spalling. Fit joint to joint without excessive force to prevent damage.

   Lay the culvert sections in stages to coincide with maintaining traffic, dewatering, temporary pumping, and part width phased construction sequencing, and as approved by the Engineer.

   Cast-in-place wingwalls, headwalls, and aprons, may be used as alternatives to precast wingwalls, headwalls, and aprons. Attach cast-in-place wingwalls or headwalls as shown on the drawings approved by the Engineer.

   Place backfill in accordance with subsection 206.03. Place and compact backfill on opposite sides of the culvert at the same time, so backfill levels on opposite sides do not differ by more than 2 feet. Hand compact backfill within 1 foot of the structure. Use vibratory compactors meeting the culvert fabricator's specifications.

   Install sheeting in accordance with subsection 704.03.B. The Contractor is responsible for construction traffic on the culvert.

2. **Precast Three-Sided and Arch Culverts.** Construct the footing from cast-in-place concrete in accordance with the contract. Construct the footing keyway level to minimize the height of the shims for leveling the precast sections. The Engineer may approve alternate procedures that provide a uniform bed of Type R-2 mortar under the culvert sections.

   Before placing the culvert sections onto the footing, survey the surface of the keyway and locate the high spot. Use the high spot as the control elevation for the bottom of the culvert sections. Add 1 inch to the high spot and place shims to that elevation. Use shims that are not susceptible to corrosion. Maintain the elevation of the culvert until the mortar surrounding the shims cures.

   Set the shims 12 inches from each corner of the culvert sections. If installing the culvert sections on a sloping grade, establish elevation control points at 50-foot increments and run a string line between these elevations to set other shims. Provide joints no greater than 1 inch wide. After placing the culvert sections, grout underneath the culvert leg sections, and to the tops of the sides of the keyway with Type R-2 mortar. Grout by mounding the mortar on one side of the leg and vibrating until it passes through to the other side of the leg. If mortar does not pass through the leg, repeat the process on the other side.

   Before sealing joints between adjacent culvert sections, provide smooth surfaces, free of debris. If using cast-in-place headwalls or wingwalls, seal the joints between the culvert elements and headwalls, and the joints between headwalls and wingwalls. Make the joints watertight.

   If using precast headwalls or wingwalls, seal the joints between the culvert elements and headwalls, and the joints between headwalls and wingwalls. Make the joints watertight using the same method for joints between adjacent culvert sections.

   Seal the joints between the adjacent precast culvert sections using a ⅞ inch by 1⅜ inch butyl rope conforming to ASTM C990. Place the butyl rope between the units in the bevel.

   If the fabricator recommends sealing joints using non-shrink grout, and if approved by the Engineer, the Contractor may omit the butyl rope.

   Cover the butyl rope with an external type rubber gasket at least 9 inches wide, conforming to ASTM C877, centered over the joint. Use a primer compatible with the rubber gasket to secure the gasket. Install the gasket in accordance with the fabricator's recommendations. After placement of the gasket, treat every precast concrete exterior joint with cold applied culvert joint sealer and cover with a 24-inch wide strip of geotextile blanket centered over the joint.

Make the completed joint watertight. The joint will be considered watertight if no visible signs of leakage appear around the joint for the duration of the project. If the joint is not watertight, create a watertight seal at no additional cost to the Department.

If limited spacing between culvert legs of adjacent spans of multiple span structures prevents sealing culvert leg joints for adjacent spans, use self-compacting engineered fill to prevent leakage of fill through joints. Prevent migration of fines through the engineered fill.

3. **Box Culverts.** Unless otherwise shown on the plans, construct culvert bedding for box culverts by placing a 9 inch thick layer of coarse aggregate 6A, with at least 80 percent of it crushed, covered with a 3 inch layer of open-graded aggregate 34G, 34R, 26A, or approved equal. Before placing the open-graded aggregate 34R, compact the coarse aggregate 6A using at least three passes of a vibrating plate compactor. Compact the open-graded aggregate using at least one pass of a vibrating plate compactor. If unstable soil conditions or obstructions other than rock require excavation of the trench below the elevation shown on the plans, undercut, backfill, and compact the trench as directed by the Engineer. Use Class 6A or 17A aggregate as backfill material for undercutting.

   Install a gasket in the joint between the box culvert sections during placement using closed-cell butyl rubber extrusion type gaskets in accordance with ASTM C990. Use the gasket sizes and installation methods recommended by the manufacturer and approved by the Engineer. After installing all box culvert sections, cover the exposed portion of the assembled box culvert joints with a nominal 12 inch wide external rubber gasket strip centered over the joint meeting the requirements of ASTM C877. Use a primer compatible with the rubber gasket to secure the gasket. Install the gasket in accordance with the manufacturer's recommendations. After placement of the gasket, treat every precast concrete box culvert exterior joint with cold applied culvert joint sealer and cover with a 24-inch wide strip of geotextile blanket centered on the joint.

   Make completed joints watertight. The Engineer will consider the joint watertight if no visible signs of leakage appear from the joint for the duration of the project. If the joint is not watertight, create a watertight seal at no additional cost to the Department.

406.04. Measurement and Payment.

Pay Item	**Pay Unit**
Culv, Precast Three-Sided or Arch, (span) foot × (rise) foot	Foot
Culv, Precast Conc Box, (span) foot × (rise) foot	Foot
Culv Bedding, Box Culv	Cubic Yard
Construction Dam	Each
Bypass Pumping	Each

A. **Precast Three Sided or Arch Culvert.** The Engineer will measure **Culv, Precast Three Sided or Arch** along the centerline of the structure. The Department will pay for **Culv, Precast**

Three Sided or Arch, of the type required, in accordance with the span-rise combination shown on the plans. The unit price for **Culv, Precast Three Sided or Arch** includes the following:

1. Designing, fabricating, load rating, and installing precast elements;
2. Headwalls and wingwalls, whether precast or cast-in-place;
3. Providing and placing shims to level the precast elements;
4. Type R-2 mortar;
5. Joint sealer materials;
6. Inserts for bars and connection hardware;
7. Required geotextile blanket;
8. Dewatering and maintaining the stream flow during construction stages; and
9. Providing plan modifications including design, additional plan quantities, and pay items to accommodate any changes to the precast units as shown on the plans.

The Department will pay for **Culv, Precast Three Sided or Arch** by plan quantity in accordance with subsection 109.01.A.

The Department will pay separately for cast-in-place concrete, other than for culvert segments, wingwalls, and headwalls. Excavation; providing and placing backfill material, including engineered fill between adjacent spans and drainage materials will be paid for by plan quantity in accordance with subsection 109.01.A.

B. **Box Culvert.** The Engineer will measure **Culv, Precast Conc Box** along the centerline of the structure. The Department will pay for **Culv, Precast Conc Box**, of the span-rise combination shown on the plans. The unit price for **Culv, Precast Conc Box** includes the cost of the following:

1. Designing, fabricating, load rating, and installing the precast elements;
2. Headwalls and wingwalls, whether precast or cast-in-place;
3. Aprons and curtain walls, whether precast or cast-in-place;
4. Joint sealer materials;
5. Geotextile blanket for box culvert joints;
6. Inserts for bars and connection hardware; and
7. Dewatering and maintaining the stream flow during construction stages.

The Department will pay separately for cast-in-place concrete, other than for culvert segments, wingwalls, and headwalls. Excavation and providing and placing backfill material will be paid for by plan quantity in accordance with subsection 109.01.A.

C. **Culvert Bedding, Box Culvert.** The Engineer will measure **Culv Bedding, Box Culv** by volume compacted in place to the depth, length, and width shown on the plans or as directed by the Engineer. The unit price for **Culv Bedding, Box Culv** includes placement and compaction of the coarse aggregate 6A and open-graded aggregate 34R, or other materials as shown on the plans or approved by the Engineer.

D. **Rock Excavation.** The Engineer will measure and the Department will pay separately for rock excavation in accordance with subsection 205.04.

DIVISION 5 – HOT MIX ASPHALT PAVEMENTS & SURFACE TREATMENTS

Section	Title	Page No.
501	Plant Produced Hot Mix Asphalt	XX
502	HMA Crack Treatment	XX
503	Paver Placed Surface Seal	XX
504	Micro-Surfacing	XX
505	Chip Seals	XX
506	Slurry Seal	XX

NOTES

Section 501. PLANT PRODUCED HOT MIX ASPHALT

501.01. Description. This work consists of providing and placing Hot Mix Asphalt (HMA) mix using Superpave Mixture Design Methods.

A. **Terminology.**

Binder Content. The percent by weight of asphalt cement in the total mixture.

Broken Aggregate. Cracked aggregate caused by construction operations.

Bulk Specific Gravity of Aggregate (Gsb). The ratio of the oven dry weight in air of a unit volume of an aggregate at a stated temperature to the weight of an equal volume of water at a stated temperature.

Crack. A visible fissure of varying length and orientation in the HMA, partially or completely through at least one course.

Effective Specific Gravity (Gse). The ratio of the oven dry weight in air of a unit volume of an aggregate (excluding voids permeable to asphalt) at a stated temperature to the weight of an equal volume of water at a stated temperature.

Flushing. A shiny or reflective condition, tacky to the touch, appearing on the HMA surface when asphalt binder collects in the voids at high pavement temperatures.

HMA Mix Design. The selection and proportioning of aggregates, mineral filler, Reclaimed Asphalt Pavement (RAP), and asphalt binder to meet the required mix design criteria.

HMA Segregation. Areas of HMA pavement exhibiting non-uniform distribution of coarse and fine aggregate particles, visually or otherwise identifiable.

Job Mix Formula (JMF). A HMA mix for a specific project, including adjustments to optimize the field application.

Lot. A lot is made up of a discrete tonnage of one mixture. Each lot is typically made up of five sublots.

Maximum Specific Gravity of Mixture (Gmm). The ratio of the weight in air of a unit volume of an un-compacted HMA at a stated temperature to the weight of an equal volume of water at a stated temperature.

Pavement. The completed HMA placement, including layers on driving lanes and shoulders.

Pavement Edge. The extremity boundaries of the pavement.

Roller Cracking. High density surface map-cracking that appears immediately after rolling.

Rutting. A depression or displacement of the HMA surface that occurs in a longitudinal direction or a localized area.

Quality Assurance (QA). All activities dealing with acceptance of the product, including but not limited to materials sampling, testing, construction inspection, and review of Contractor QC documentation. The Engineer's HMA QA procedures are contained in the *HMA Production Manual* and in the HMA-QA Plan.

Quality Control (QC). All activities dealing with process control to ensure quality, including but not limited to training, materials sampling, testing, project oversight and documentation. The Contractor's HMA QC procedures are contained in the HMA-QC Plan.

Sublot. A portion of a lot or an individual sample that is represented by a complete set of QA tests. Sublots will be approximately equal size of 1000 tons. The Contractor and the Engineer may agree to reduce the typical 1000 ton sublots based on project staging or other project conditions.

Target Value. A JMF parameter value that may be adjusted, if approved by the Engineer, to account for changes in the physical properties of the mixture.

Temporary Pavement. A roadway and appurtenances constructed to help the movement of highway and pedestrian traffic around a construction operation that will be removed upon completion of the project.

Unlimited Daily HMA Production. Unrestricted daily HMA production tonnage.

Voids in Mineral Aggregate (VMA). The volume of void space between the aggregate particles of a compacted paving mixture that includes the air voids and the asphalt binder not absorbed into the aggregate, expressed as a percent of the total volume of mixture.

501.02. Materials. Provide materials in accordance with the following:

Superpave HMA Mixtures 902
Superpave Aggregates 902
Mineral Filler, 3MF 902
Anti-Foaming Agent 904
Asphalt Binders 904
Bond Coat, SS-1h, CSS-1h, LTBC-1, LTBC-2 904

Plant produced HMA consists of asphalt binder, aggregates, mineral filler, and other additives.

Provide release agents that do not harm the HMA mixture. Do not use fuel oil or other distillate derivatives.

Provide the HMA mix type and the performance grade of asphalt binder as required by the contract.

Provide blended aggregates for HMA top course mixtures, except top courses for shoulders, bike paths, temporary roads, and parking areas, meeting the required Aggregate Wear Index (AWI).

A. **Composition of HMA Mixtures.**

1. **Mix Design.** Develop an HMA mix design in accordance with the *HMA Production Manual* and submit to the Department. The Department will evaluate the design in accordance with Section 1 of the *HMA Production Manual*, "Procedures for HMA Mix Design Processing."

   Provide written certification that the materials in the mix design are from the same source and meet the material properties in the mix design or the Department-approved JMF. Make all JMF adjustments in accordance with the *HMA Production Manual*.

   Provide combined aggregate blends meeting the properties specified in section 902. Provide a mix design that meets the requirements of Table 501-1, Table 501-2, and Table 501-3.

   For mix design purposes, top and leveling courses are the mix layers within 4 inches of the surface. The base course consists of the layers below 4 inches from the surface. For mix layers within the 4 inch threshold, if less than 25 percent of the mix layer is within 4 inches of the surface, the mix layer is a base course.

   If High Stress HMA is shown on the plans, provide the same mix designation (5EML, 5EMH, 4EML, 4EMH, etc.) as required for the mainline top and leveling courses, except change the performance graded binder as shown on the HMA application table.

Table 501-1 Superpave Mix Design Criteria				
Design Parameter	**Mix Number**			
	5	**4**	**3**	**2**
Percent of Maximum Specific Gravity (%G_{mm}) at the design number of gyrations, (N_d)	96.0% (a)			
%G_{mm} at the initial number of gyrations, (N_i)	See Table 501-3			
%G_{mm} at the maximum number of gyrations, (N_m)	≤98.0%			
VMA min % at N_d (based on aggregate bulk specific gravity, (G_{sb}))	15.00	14.00	13.00	12.00
VFA at N_d	See Table 501-2 (b)			
Fines to effective asphalt binder ratio (P_{No200}/P_{be})	0.6–1.2			
Tensile strength ratio (TSR)	80% min			

a. Unless noted otherwise on the plans, design all mixtures to 96.0% of Maximum Specific Gravity (%G_{mm}) at the design number of gyrations, (N_d). During field production, increase Percent of Maximum Specific Gravity (%G_{mm}) at the design number of gyrations, (N_d) to 97.0%. Use liquid asphalt cement for regression of mixes, unless otherwise noted on plans.
b. For regressed mixtures the maximum criteria limits do not apply.

Table 501-2 VFA Minimum and Maximum Criteria			
Estimated Traffic (million ESAL)	**Mix Type**	**Top & Leveling Courses**	**Base Course**
≤0.3	EL	70–80	70–80
>0.3 – ≤3.0	EML	65–78	65–78
>3.0 – ≤30	EMH	65–78 (a)	65–75
>30 – ≤100	EH	65–78 (a)	65–75

a. The specified VFA range for mix Number 5 is 73%–76%.

Table 501-3 Superpave Gyratory Compactor (SGC) Compaction Criteria					
Estimated Traffic (million ESAL)	**Mix Type**	**%G_{mm} at (N_i)**	**Number of Gyrations** (a)		
			N_i	**N_d**	**N_m**
≤0.3	EL	≤91.5%	7	50	75
>0.3 – ≤3.0	EML	≤90.5%	7	75	115
>3.0 – ≤30	EMH	≤89.0%	8	100	160
>30 – ≤100	EH	≤89.0%	9	125	205
a. Compact mix specimens fabricated in the SGC to N_d. Use height data provided by the SGC to calculate volumetric properties at N_i. Compact mix specimens at optimum P_b to verify N_m for mix design specimens only.					

2. **Recycled Mixtures.** Recycled Asphalt Pavement (RAP) may be substituted for a portion of the new material required to produce HMA mixture. Design and produce the mix to meet the criteria in this subsection and the contract.

   a. **Stockpile Requirements.** Process RAP to the size required for the specified HMA mix. Ensure the stockpile contains enough material to produce the recycled mixtures the Engineer approves for the project. If the RAP stockpile is not sufficient to produce recycled mix quantities required for the project, provide an Engineer-approved mix design without RAP at the same unit price.

      Provide documentation of testing (one test per 1,000 tons, minimum of three tests) and accumulated tonnage in the stockpile to the MDOT laboratory. The tonnage may be estimated. The Department will begin evaluating the mix design after receipt of the documentation.

   b. **Mix Design.** Submit required documentation for recycled mix designs in accordance with Section 1 of the *HMA Production Manual*, "Procedures for HMA Mix Design Processing."

B. **HMA Plant Certification.** Ensure hot mix asphalt plants are certified by the Department at least 3 work days before mix production begins. The Engineer will certify hot mix asphalt facilities in accordance with Section 2 of the *HMA Production Manual*, "Certification Procedure of HMA Plants." Post a seal of certification in the plant control office.

C. **HMA Production.** Submit an approved mix design for the mix required to the Engineer at least 2 work days before production begins.

Provide even heating of the mass of asphalt binders and maintain heat control. Heat asphalt binders to the temperature required for the type of binder. Do not exceed the maximum temperature specified in Table 904-7 for asphalt binder and HMA. The Department will reject

asphalt binder and mix if the temperature exceeds the maximum specified in Table 904-7. The Department will reject contaminated asphalt binder.

Stockpile aggregates at the facility, in a manner that prevents segregation. Dry aggregates to a moisture content that will ensure an appropriately coated HMA mix. For batch and continuous plants, the Department will reject aggregates in the hot bins that contain sufficient moisture to cause foaming or a water-saturated mixture. Remove rejected materials from the bins.

Place uniform gradations of aggregates in the cold feed system. If providing a blend of aggregates for the mix by combining aggregates from at least two cold feed bins, ensure the blend meets the combined gradation (from JMF) quality control tolerances.

The use of at least one hot aggregate bin to proportion aggregates to meet the JMF tolerances is allowed if the cold feed requirements are met.

501.03. Construction.

A. **Equipment.** Provide equipment in accordance with section 107, capable of producing pavement that meets the requirements of this section.

1. **Cold-Milling Machines.** Provide equipment that consistently removes the HMA surface, in one or more passes, to the required grade and cross section, and produces a uniformly textured surface. Provide machines equipped with the following:

    a. Provide a Cold-Milling Machine that has sufficient power, traction and stability to maintain an accurate depth of cut. Maintain the propulsion and guidance system of the milling machine in such condition that the milling machine may be operated to straight and true lines.
    b. Provide a Cold-Milling Machine capable of operating using minimum 30 foot automatic grade controls (contact or non-contact) averaging system or other approved grade control systems and capable of transverse slope control. Describe the use of such controls in the Contractor's Cold-Milling Quality Control Plan.
    c. Provide a Cold-Milling Machine capable of picking up the removed material in a single operation. A self-loading conveyor will be an integral part of the milling machine. Windrows are not allowed.

2. **Hauling Equipment.** Ensure transport trucks are equipped to protect the mix from the weather and retard the loss of heat. Equip transport trucks and trailers with a working backup alarm.

3. **Pressure Distributor.** Provide a pressure distributor in accordance with subsection 505.03.A.1.

4. **Pavers.** Equip each paver with a full-width vibratory or tamper bar screed capable of spreading and finishing HMA to the required cross section and grade. Use a paver that produces a uniformly finished surface, free of tears, other blemishes, and measurable segregation.

   Equip the paver to provide a uniform head of material ahead of the screed. Install reverse pitch augers or paddles inside the ends of the auger shafts to force the mix to the center of the main screed.

   Ensure extensions, added to the main screed, provide the same vibrating or tamping action and heating capabilities as the main screed. Adjust extensions to the main screed so, after breakdown rolling, no longitudinal marks remain on the surface. Equip in-line screed extensions with a continuation of the automatically controlled spreading augers to within 12 inches of the outside edge. Follow the manufacturer's recommendations for other screed extensions.

   Except for the paving operations listed in subsection 501.03.F.1.a through subsection 501.03.F.1.d, equip pavers with an automatically controlled and activated screed with grade reference and transverse slope control. Use an Engineer-approved grade referencing attachment, at least 30 feet long, for lower courses and the first pass of the top course. Ensure the Engineer approves alternate grade referencing attachments before use.

   After placing the first pass of the top course, the Contractor may, with prior approval from the Engineer, substitute a joint matcher, a grade referencing attachment at least 10 feet long, or other grade referencing equipment for constructing adjacent passes of the top course.

5. **Rollers.**

   a. **Steel-Wheeled Rollers.** Provide self-propelled vibratory steel-wheeled rollers, static tandem rollers, or self-propelled static three-wheeled rollers. Provide a steering device that allows the roller to follow the established alignment. Equip rollers with wheel sprinklers and scrapers. Provide smooth roller wheels, free of openings or projections that will mar the pavement surface.

      Provide vibratory rollers with an automatic shutoff to deactivate the vibrators if the roller speed decreases below ½ mph. Provide rollers that operate in accordance with the manufacturer's recommended speed, impacts per foot, and vibration amplitude for the thickness of HMA mix.

   b. **Pneumatic-Tired Rollers.** Provide self-propelled pneumatic-tired rollers. Equip rollers with at least seven wheels spaced on two axles so the rear group of tires does not follow in the tracks of the forward group, providing at least ½-inch tire path overlap. Provide smooth tires capable of being inflated to the pressure recommended by the roller or tire

manufacturer. Equip the rollers with a mechanism that can smoothly reverse the motion of the roller.

Equip the rollers with wheel scrapers and skirting to enclose the wheels to within 3 inches of the pavement surface. Use a release agent to prevent material from sticking to the tires and being deposited on the top course pavement during rolling.

c. **Combination Rollers.** The Contractor may use combination pneumatic-tired and steel-wheeled rollers manufactured specifically for HMA compaction, if equipped with the required sprinklers and scrapers.

6. **Spreaders.** Use self-propelled spreaders capable of pushing the hauling units. Ensure spreaders can maintain the required width, depth, and slope, without causing segregation.

7. **Material Transfer Device.** When a Material Transfer Device (MTD) is required, it must be capable of delivering HMA mix from the truck transport to the paver hopper to ensure constant paver speed, remixing HMA material using manufacturer's developed technology, and depositing material in the paver hopper. Provide a paver hopper insert with at least a 10 ton capacity in the paver and keep at least two-thirds full of mix during paving. A windrow pickup machine does not satisfy the requirements for a MTD.

8. **Compressed Air System.** If a compressed air system is required for cleaning pavement, equip the air compressor with a moisture separator to remove oil and water from the air supply. Provide a compressor capable of producing at least 100 psi and continuous 150 cfm airflow.

9. **Miscellaneous Equipment.** Provide a straightedge at least 10 feet long and other tools to finish the work.

10. **Lights on Equipment.** If maintaining traffic on HMA construction, equip equipment within the project, including cold-milling machines, distributors, and rollers, with at least one Department-approved flashing, rotating, or oscillating amber light. Equip pavers with at least one light on each side. Mount the lights so the warning signal is visible to traffic in every direction. Operate the lights while work is in progress. Ensure hauling units activate four-way flashers on the project.

B. **Preparation of Base.** Provide subgrade, subbase, aggregate base course, crushed and shaped base, or rubblized base in accordance with the relevant sections of Division 2 and Division 3, before HMA placement.

C. **Preparation of Existing Pavement.** Prepare the existing surface as required to construct HMA pavements, shoulders, and approaches.

1. **Drainage Structures, Monument Boxes, and Water Shutoffs.** Adjust, temporarily lower, or both, catch basins, manhole covers, monument boxes, and water shutoffs in accordance

with subsection 403.03.A. Meet the smoothness requirements required in subsection 501.03.H.

2. **Cleaning Pavement.** Using methods approved by the Engineer, clean dirt and debris from the pavement surface and paved shoulders before placing HMA. Remove loose material from joints and cracks using compressed air.

   If the Engineer determines the compressed air system will not remove deleterious material, remove loose material by a hand or mechanical method, as approved by the Engineer. The Department will pay for removal of material by hand or mechanical methods in accordance with subsection 501.04.E.

   Do not place HMA until the Engineer inspects and approves the condition of the existing pavement.

3. **Removing Existing Pavement for Butt Joints.** If a butt joint is required, remove the existing surface to the thickness of the proposed overlay, for the full width of the joint. Uniformly taper the removal to the original surface over at least 35 feet.

4. **Edge Trimming.** For required removal of HMA shoulder material or no greater than 1 foot width of HMA pavement, cut the HMA material full depth along the pavement edge or removal line to prevent tearing the pavement surface. Cut joints, where the completed surface will be exposed, with a saw, cold-milling machine, or other methods approved by the Engineer. Cut joints, where the completed surface will be covered by HMA mix, with a coulter wheel, saw, cold-milling machine, or other method approved by the Engineer.

5. **Cold-Milling HMA Surfaces.** Before milling existing pavement, obtain a Department-approved mix design in accordance with subsection 501.02.A, and ensure the availability of HMA mix quantities to cover milled surfaces. Do not maintain traffic on the milled surface unless specified in the contract or approved by the Engineer.

   Cold-Milling Quality Control (QC) Plan and Cold-Milling Operations Plan. Prior to beginning milling operations, submit a Cold-Milling QC Plan and a Cold-Milling Operations Plan to the Engineer for approval.

   a. Include, as a minimum, the following specific items in the Cold-Milling QC Plan:

      i. The schedule for replacing the cutting teeth.
      ii. The daily preventive maintenance schedule and checklist.
      iii. Proposed use of automatic grade controls.
      iv. The surface testing schedule for smoothness.
      v. The process for filling distressed areas.
      vi. The schedule for testing macrotexture of the milled surface.

vii. Corrective procedures if the milled surface does not meet the minimum macrotexture specification.
viii. Corrective procedures if the milled surface does not meet the minimum transverse or longitudinal surface finish when measured with a 10 foot straightedge.
ix. The methods for longitudinal control guidance (painted string line or measure offs).
x. Identify and provide contact information for on-site contractor personnel responsible for the work and authorized to adjust the QC plan.

b. Include, as a minimum, the following specific items in the Cold-Milling Operations Plan:

i. The number, types and sizes of mill machines to be used.
ii. The width and location of each mill machine pass.
iii. The number and types of brooms and or vacuum trucks to be used and their locations with respect to the mill machine.
iv. The proposed method for mill machine and wedging around existing structures such as manholes, valve boxes, and inlets.
v. The longitudinal and transverse typical sections for tie-ins at the end of the day.
vi. If requested by the Engineer, a plan sheet showing the milling passes.
vii. Identify macro texture testing personnel and sequencing of testing (minimum of 3 tests daily that are representative of the day's milling).

Remove the HMA surface to the depth, width, grade, and cross section shown on the plans. Backfill and compact depressions resulting from removal of material below the specified grade, in accordance with subsection 501.03.C.9.

If the milling machine discovers buried structures within the specified grade, such as valve boxes, manholes, or railroad tracks that are not identified on the plans, the Department will pay for all associated costs, as extra work, in accordance with subsection 103.02.

Immediately after cold-milling, clean the surface. Dispose of removed material in accordance with subsection 104.07.D and subsection 204.03.

Mill the existing pavement to the cross-slope shown on the plans. Supply a 10 foot straightedge. Ensure that the finished surface does not vary longitudinally or transversely more than ¼ inch from a 10 foot straightedge. Ensure that the milled area is free from gouges, continuous grooves, ridges and has a uniform texture. Ensure that the horizontal gouge in the vertical edge created from the milling operation is limited to a maximum width of 1.0 inches. Adjust speed, drum speed, and/or teeth as necessary to meet the requirements of this specification. Ensure the milling operation provides an acceptable surface texture by achieving a maximum mean texture depth of 0.108 inches thickness according to ASTM E965. Perform three random QA macro texture tests daily that are representative of the day's milling to maintain texture and verify conformance with the 0.108 inches thickness mean texture depth requirement. For projects with less than 3000 square yards, a minimum of one random

QA macro texture test per day is required. Perform tests as soon as practical behind the milling operations.

6. **Removing HMA Surface.** Except as specified in subsection 501.03.C.4, removing HMA surface applies to removing HMA overlying a material designated for removal or that is required to remain in place.

   Cut joints, exposed in the completed surface, with a saw or cold-milling machine. Cut joints, covered by HMA mix, with a coulter wheel, saw, or cold-milling machine. Obtain the Engineer's approval of alternate methods for cutting joints.

   When removing HMA overlying a base course that is to remain in place, cut the edges of the surface requiring removal along straight lines for the full depth of the HMA surface.

   When removing HMA by cold-milling, the Engineer may direct removal to be less than the full depth of HMA surface.

7. **Removing HMA Patches.** Remove patches that may compromise the performance of the overlay.

8. **Joint and Crack Clean Out.** If the plans show joint and crack clean out, use mechanical or hand methods to remove joint sealants to at least 1 inch deep. Remove vegetation, dirt, and debris that cannot be removed using the methods specified in subsection 501.03.C.2, from transverse and longitudinal joints and cracks. Use hand patching to fill cleaned joints and cracks at least 1 inch wide.

9. **Hand Patching.** If the contract requires hand patching, fill holes, depressions, joints, and cracks in the existing pavement and replace existing patches. Compact the hand patching material in no greater than 3 inch layers to the adjacent pavement surface grade using a machine vibrator or Department-approved roller. Use top course or other Engineer-approved mix for hand patching material.

10. **Repairing Pavement Joints and Cracks.** Repair joints and cracks as required.

D. **Bond Coat.** Uniformly apply the bond coat and provide complete coverage to a clean, dry, surface with a pressure distributor. Obtain the approval of the Engineer for the application rate after work begins. Application rate shall be within a range of 0.05 to 0.15 gallons/syd. Apply the bond coat ahead of the paving operation to allow the bond coat to cure before placing HMA.

Do not leave pools of bond coat on the surface and do not spray the bond coat on adjacent pavement surfaces. Apply the bond coat to each HMA layer and to the vertical edge of the adjacent pavement before placing subsequent layers.

E. **Transportation of Mixtures.** Weigh each load of HMA, accepted by the Department, to the nearest 20 pounds on an approved scale with an automatic printout system. Provide a scale and printout system for platform and suspended scales in accordance with subsection 109.01.B.6. Provide a ticket to the engineer with each load.

Apply a release agent, in accordance with subsection 501.02, to hauling units. Loads with excessive amounts of release agent will be rejected. Do not place crusted HMA in the paver.

The Department will reject loads, immediately prior to placement, with a temperature either below 250 °F (225 °F when using a warm mix chemical additive) or greater than 20 °F from the recommended maximum mixing temperature specified by the binder producer.

F. **Placing HMA.**

1. **General.**

Place HMA on a cured bond coat using pavers in accordance with subsection 501.03.A.4, unless placing mixtures for the following:

a. Variable width sections;
b. The first course of a base course mix on a subgrade or sand subbase;
c. Base course mixtures for shoulders and widening less than 10½ feet wide; or
d. Top and leveling course mixes for shoulders and widening less than 8 feet wide.

Place HMA mix in layers, and do not exceed the application rate. If the application rate for an HMA pavement exceeds the maximum rates specified in Table 501-4, and the edges are not confined, construct the pavement in at least two layers.

Table 501-4
HMA Application Rates

Mix Number	Course Application	Application Rate, (lb/yd²) minimum–maximum (a)
2	Base	435–550
3	Base, Leveling	330–410
4	Leveling, Top	220–275
5	Top	165–220

a. Minimum application rates do not apply to wedging courses.

Wedge with HMA to remove irregularities in the existing road surface. Place and compact HMA wedging to correct the foundation. Allow the wedging to cool enough to support construction equipment without causing visible distortion of the mat before placing subsequent wedging, base, leveling, or top course mixtures.

Place HMA mix to the slope and width shown on the plans. Place subsequent HMA course to align the vertical edge with the previous courses, without constructing a ledge. Correct

ledges that result from placing material in excess of the width shown on the plans at no additional cost to the Department.

Place shoulder aggregate and compact flush after placement of each layer of HMA at the end of the paving day or place traffic control devices in accordance with subsection 812.03, at no additional cost to the Department. Complete final shaping and compaction of the shoulders after placing the top course of HMA.

If delays slow paving operations and the temperature of the mat immediately behind the screed falls below 200 °F, stop paving and place a transverse construction joint. If the temperature of the mat falls below 190 °F before initial breakdown rolling, remove and replace the mat at no additional cost to the Department.

If placing the uppermost leveling and top course, place the longitudinal joint to coincide with the planned painted lane lines.

If the temperature of the mat falls below 170 °F before placing the adjacent mat, apply bond coat to the vertical edge of the mat.

If constructing the lanes with at least two pavers in echelon, match the depth of loose HMA from each paver at the longitudinal joints.

2. **Joints in HMA Pavement.**

   a. **Transverse Construction Joint.** If constructing a transverse construction joint, stop the paver and lift the screed before material falls below the auger shaft. Remove the paver and roll through the planned joint location. Cut a transverse vertical joint and remove excess HMA.

      Place burlap, canvas, or paper as a bond breaker ahead of, and against the vertical face. Place HMA against the bond breaker and taper from the new mat to the existing surface. Extend the temporary taper 5 feet for each inch of mat thickness, or as directed by the Engineer. Compact and cool the temporary taper before allowing traffic on the new surface. Remove the temporary taper before resuming paving.

   b. **Feather Joint.** Transition the new mat to existing surfaces at the beginning and end of resurfacing sections and at intersections unless using butt joints. Transition the new mat to existing surfaces at a rate of 1 inch over 35 feet. Construct transitions on a cured bond coat applied at a rate of 0.10 gallons per square yard. After compaction, spray with bond coat, sand, and roll the first 3 feet of the joint and 1 foot of the existing surface.

   c. **Vertical Longitudinal Joint.** When opening to traffic, plan the work to resurface adjacent lanes to within one load of the same ending point at the completion of paving operations each day. Construct a vertical joint to conform to the pavement cross section.

When compacting an unsupported (unconfined) edge of the mat, keep the roller from 3 inches to 6 inches inside the unsupported edge on the first pass; ensure the roller overhangs the unsupported edge by 3 inches to 6 inches on the second pass.

When placing HMA in a lane adjoining a previously placed lane, place the mixture so that the strike off shoe will produce an edge that is adjacent to or minimally overlaps the adjoining course. Compact the longitudinal joint by rolling from the hot side, keeping the edge of the roller approximately 6 inches to 8 inches inside the cold joint for the first pass. For the second pass of the roller, compact the joint from the hot side while overlapping the cold side by 6 inches to 8 inches.

d. **Tapered Overlapping Longitudinal Joint.** A tapered overlapping longitudinal joint may be used instead of a longitudinal vertical joint.

If using tapered overlapping longitudinal joints, resurfacing lanes within one load of the same point-of-ending at the completion of paving operations each day is not required. Pave adjacent lanes within 24 hours, unless delayed by inclement weather or approved by the Engineer.

Construct the tapered overlapping longitudinal joint by tapering the HMA mat at a slope no greater than 1 on 12. Extend the tapered portion beyond the normal lane width.

Place a ½-inch to-1 inch notch at the top of the taper on paving courses.

Provide a uniform slope by constructing the tapered portion of the mat using a Department-approved strike-off device that will not restrict the main screed.

Apply bond coat to the surface of the taper before placing the adjacent lane.

3. **Placing HMA Shoulders.** Use a self-propelled mechanical paver or spreader to place HMA shoulders.

If placing the top course on new shoulders, or placing leveling, or top course on existing HMA shoulders at least 8 feet wide, place the mix using a paver with an automatically controlled and activated screed and strike-off assembly and corresponding grade referencing equipment. Use grade-referencing equipment, as directed by the Engineer.

Stop shoulder paving at crossroad approaches, auxiliary lanes, commercial driveways, and ramps. Do not pave through these areas.

4. **Placing HMA Approaches.** Place HMA on driveway or crossroad approach foundations, approved by the Engineer.

Place approaches in layers no greater than the application rate. Do not stop mainline paving of lanes adjacent to the approach to pave the HMA approach.

5. **Safety Edge.** Construct the safety edge on the shoulders at locations shows on the plans. The finished shape of the safety edge will be in accordance with Standard Plan R-110 series. Ensure the safety edge is constructed monolithically with the shoulder and is of the same material type. Prior to placing HMA shoulder overlays, prepare the existing shoulder material to provide a smooth and uniform paving surface. Excavate, trench, and/or shape the existing shoulder material in order that the safety edge may be placed as required on the plans. Ensure the existing material does not impede the paving equipment and placement of HMA. For new or reconstructed shoulders prepare base materials in accordance with the plans.

   Utilize an approved longitudinal safety edge system to create a sloped edge profile onto the roadway shoulder. Utilize an approved safety edge system that compacts the HMA and provides a finished sloped wedge in accordance with the contract. Do not use a single plate strike off. Use a system that is adjustable to accommodate varying pavement thicknesses.

   Prior to commencing any shoulder work, provide a test section to demonstrate the safety edge finished shape and compaction of the proposed safety edge system. The Engineer may waive the test section if satisfactory evidence is provided that the proposed system has been successfully used on other MDOT or MDOT local agency projects. Ensure all safety edge systems meet the approval of the Engineer.

G. **Rolling.** Compact each layer of HMA in accordance with the contract and free of roller marks.

Keep the surface of the steel roller wheels moist during rolling.

Use a pneumatic tire roller on HMA overlay projects in the intermediate rolling position to knead HMA over existing pavement.

H. **Smoothness Requirements.** After final rolling, the Engineer may test the surface longitudinally and transversely using a 10-foot straightedge at selected locations in accordance with MTM 722. Construct the surface and correct variations, at no additional cost to the Department, to the tolerances specified in this subsection.

1. **Base Course.** Construct lower layers of base courses to a tolerance of ¾ inch, and final layers of base courses to a tolerance of ⅜ inch.

2. **Leveling and Top Course.** For multiple course construction, construct lower courses to a tolerance of ¼ inch, and top courses to a tolerance of ⅛ inch.

3. **Single Course Overlays.** Construct single courses to a tolerance of ¼ inch.

4. **Longitudinal Joints.** Construct adjacent lanes to a tolerance of ¼ inch for base and leveling courses and a tolerance of ⅛ inch for top course.

5. **Drainage Structures, Monument Boxes, and Water Shutoffs.** Construct to a tolerance of ¼ inch.

I. **Weather Limitations.**

1. **HMA Weather Limitations.** Place HMA in accordance with the following restrictions:

   a. Do not place HMA or apply bond coat when moisture on the existing surface prevents curing;
   b. Do not place HMA unless the temperature of the surface being paved is at least 35 °F and there is no frost on or in the grade or on the surface being paved, unless otherwise approved by the Engineer in writing;
   c. Place only HMA courses that are greater than 200 pounds per square yard if the temperature of the surface being paved is greater than 35 °F;
   d. Place only HMA courses that are greater than 120 pounds per square yard if the temperature of the surface being paved is at least 40 °F; and
   e. Place any HMA course if the temperature of the surface being paved is at least 50 °F

J. **Protection of Structures.** Protect bridges, curbs, gutters, driveways, sidewalks, barriers, and other appurtenances to prevent surfaces from becoming discolored during application of bond coat or HMA to the road surface. Remove material from appurtenances, as directed by the Engineer, at no additional cost to the Department.

K. **Aggregate Shoulders.** On resurfacing projects, scarify existing aggregate shoulder surfaces before placing new aggregate material.

Maintain the shoulder for vehicles to pass the construction equipment. If Contractor operations or traffic disturbs the area between the pavement and the right-of-way line, restore the area to a condition approved by the Engineer at no additional cost to the Department.

L. **Monument Boxes.** Place or adjust monument boxes in accordance with section 821.

M. **Quality Control (QC) Plan.** Prepare and implement a quality control (QC) plan for HMA, in accordance with the *HMA Production Manual*.

Make adjustments in process controls to prevent production of non-conforming material in lieu of accepting payment at a reduced price. The Department will not allow continual production of non-conforming material at a reduced price in lieu of making adjustments.

The Engineer will not perform sampling or testing for quality control or assist in controlling the HMA production and placement operations.

N. **HMA Mix Acceptance.** The Engineer will inspect field-placed material, perform QA sampling and testing, and monitor Contractor adherence to the HMA-QC Plan.

1. **HMA Field-Placed Inspection.** The Engineer will perform a visual inspection of HMA to identify areas requiring corrective action. The Engineer will inspect the base and leveling courses within 18 hours and the top course within 36 hours of placement. If the Engineer determines that corrective action is required, do not pave overlying courses until after corrective action is completed and the Engineer determines that the pavement is in conformance with the contract.

   The Engineer will determine the need for corrective action based on the factors specified in Table 501-5. Corrective action may include remedial treatment, including crack or surface sealing, or replacement.

   Submit an action plan to the Engineer that addresses all factors that resulted in the need for corrective action. Complete all corrective action required to repair or replace unacceptable work at no additional cost to the Department.

   If the Engineer and the Contractor agree, the Department may make a contract adjustment of no greater than 100 percent of the bid price for corrective action.

   The Department will not grant extensions of time for repair work to meet the inspection acceptance requirements specified in subsection 501.03.N.1.

   The Engineer will determine the area subject to corrective action, for removal and replacement of top courses, as the longitudinal extent of corrective action multiplied by the width of the paving course affected.

   The Department will accept HMA subject to corrective action as follows:

   a. HMA placed for corrective action involving full removal and replacement will be accepted in accordance with the contract.
   b. The area requiring corrective action other than full removal and replacement will not be measured for incentive payment.
   c. If more than 10 percent of the area of a sublot requires corrective action, the sublot will not be measured for incentive payment.

Table 501-5 HMA Criteria For Corrective Action				
Criteria (a)	**Length**	**Extent** (b)	**Severity**	**Corrective Action** (c)
Segregation	—	>215 ft²/ 328 ft LL	Heavy (d)	Replace
Rutting	—	>32 ft	>¼ in average depth over the length of occurrence	Replace
Flushing	—	>108 ft²/ 328 ft LL	High (e)	Replace
Edge of Paved Shoulder	>33 ft	visible ledges	>3 in	Trim
Crack (g)	any	any	all	Seal (f)

Note: LL = lane length.
a. Criteria apply to all courses except flushing, which applies to the top course only.
b. Extent is calculated by summing locations within the length required.
c. The appropriate corrective action is dependent on the extent and severity of the criteria, and on the intended service life of the pavement.
d. Segregation severity will be determined in accordance with MTM 326. If segregation thresholds are met twice on a paving course, the use of a Material Transfer Device for the remaining paving for that course may be required at no additional cost to the Department.
e. Flushing severe enough to significantly affect surface friction (Friction Number <35).
f. Other corrective action may be required as crack frequency increases.
g. A reflective crack determined by the Engineer to be caused by an underlying condition does not require corrective action.

2. **HMA Testing Acceptance.** The Engineer will accept HMA based on visual inspection, small tonnage, or QA sampling and testing acceptance criteria The Engineer will notify the Contractor before conducting QA sampling to allow the Contractor to witness the sampling, but not in a manner that will allow alteration of production in anticipation of sampling. The Engineer will conduct QA sampling in accordance with MTM 313 or MTM 324.

   a. **Visual Inspection Acceptance Criteria.** The Engineer may accept quantities less than 500 tons, of any individual mixture, in accordance with the Materials Quality Assurance Manual.

   b. **Temporary Pavement Acceptance Criteria.** The basis for measuring the mixture quality is Quality Control (QC) testing and the QC processes specified in the applicable contract specifications for superpave or Marshall mixes. Provide a copy of QC result to the Department within 24 hours upon request. The Department is not required to perform Quality Assurance (QA) testing for the Temporary Hot Mix Asphalt but reserves the right to perform verification testing. All materials and HMA mixture requirements apply. The initial production lots will be waived upon request. There are no pay factor or price adjustments based on mixture volumetrics for the Temporary HMA.

      Perform all maintenance with the exception of snow and ice removal during the seasonal shutdown period. Maintain temporary pavement until the completion of the contract or the opening to traffic of the new pavement.

Correct all deficiencies with the Temporary Pavement. The Engineer will make a negative adjustment for deficiencies requiring repairs or renewals, not corrected within the time frames stated in section 812 of the Standard Specifications for Construction and for each occurrence that maintenance is required on the Temporary HMA. Contract price adjustments will be made, according to Table 501-6, for each occurrence that repairs or renewals are required on the temporary roadway that are not attributable to normal wear and tear of traffic, weather or an inadequate base condition not addressed in the contract.

TABLE 501-6
Contract Adjustments for Maintenance of Temporary Pavement

ADT(a)	Per Maintenance Occurrence
0 to 10,000	$2,000(b)
10,000 to 40,000	$4,000(b)
40,000 and greater	$8,000(b)

a. Based on ADT shown on Title Sheet
b. The contract adjustment will be doubled if the HMA Quality Control Plan is not adhered to.

O. **Asphalt Binder Acceptance.** The Department will accept asphalt binder in accordance with Department procedures.

501.04. Measurement and Payment.

Pay Item	**Pay Unit**
HMA, 5 E __	Ton
HMA, 4 E __	Ton
HMA, 3 E __	Ton
HMA, 2 E __	Ton
HMA, (type), High Stress	Ton
HMA Approach	Ton
HMA Approach, High Stress	Ton
HMA, Temp Pavt (mix type)	Ton
Pavt for Butt Joints, Rem	Square Yard
Edge Trimming	Foot
Cold Milling HMA Surface	Square Yard, Ton
HMA Surface, Rem	Square Yard
HMA Patch, Rem	Square Yard
Joint and Crack, Cleanout	Foot
Hand Patching	Ton
Pavt, Cleaning	Lump Sum
Pavt Joint and Crack Repr, Det __	Foot

A. **HMA, (type), High Stress.** The Department may pay for **HMA, (type), High Stress** for up to 150 feet outside the limits shown on the plans to allow time to transition to the high stress HMA. The Department will pay for high stress HMA placed outside the 150-foot limit as other HMA mix pay items.

B. **Pavement for Butt Joints, Removal.** The unit price for **Pavt for Butt Joints, Rem** includes the cost of removing and disposing of concrete or HMA materials.

C. **Edge Trimming.** The Engineer will measure **Edge Trimming** along the cut edge. The unit price for **Edge Trimming** includes the cost of cutting, removing, and disposing of excess HMA material.

D. **Cold Milling HMA Surface.** The unit price for **Cold Milling HMA Surface** includes the cost of removing, loading, hauling, weighing and disposing of the cold milled material, and cleaning the cold milled pavement. If paid by the ton for cold-milled HMA, deposit the cold milled material directly from the cold milling machine into the hauling units and weigh on a scale meeting the requirements of subsection 109.01.B before placement in a stockpile or a disposal area.

Material picked up by cleaning after cold milling is not weighed or paid for.

Macrotexture testing, macrotexture corrective actions, cleaning, and all other work related to mean texture depth requirements will not be measured and paid for separately, but shall be included in the work.

Separate payment will not be made for providing and maintaining an effective Cold-Milling QC Plan, nor for providing and maintaining an effective Cold-Milling Operations Plan.

E. **Pavement, Cleaning.** The Engineer will measure **Pavt, Cleaning** as a unit, including paved shoulders, approaches, and widened areas. The unit price for **Pavt, Cleaning** includes the cost of cleaning the foundation, joints, and cracks, and sweeping shoulders, base courses, and leveling courses.

If the Engineer directs additional hand or mechanical methods to clean the pavement, the Department will pay for this work as **Joint and Crack, Cleanout** if the contract documents include the pay item. If the contract documents do not include a pay item for joint and crack cleanout, the Department will pay for additional hand or mechanical work as extra work, in accordance with subsection 109.05.

F. **Joint and Crack, Cleanout.** The Engineer will measure **Joint and Crack, Cleanout** along the cleaned joint and crack.

G. **Hand Patching.** The unit price for **Hand Patching** includes the cost of placing HMA, by hand or other methods, and compacting the material.

H. **Removing HMA Surface.** The Engineer will measure, and the Department will pay for removing HMA surface, no greater than 12 inches thick, overlying a material designated for removal or that is required to remain in place, as **HMA Surface, Rem**. The unit price for **HMA Surface, Rem** includes the cost of edge cutting to establish a neat line, as required, and removal and disposal of the HMA material.

For removal of HMA surfaces from structures, the unit price for **HMA Surface, Rem** includes the cost of removing old membrane.

The Engineer will measure, and the Department will pay for removing HMA surface, greater than 12 inches thick, overlying a material designated for removal or that is required to remain in place, as **Pavt, Rem** in accordance with subsection 204.04.

I. **Pavement Joint and Crack Repair.** The Engineer will measure **Pavt Joint and Crack Repr**, of the detail required, along the joint and crack. If the pavement joint and crack repair exceeds 30 inches in width, the Engineer will measure each 30-inch wide segment, or portion thereof, separately for payment. The Department will pay for the HMA material used to fill the joints, after removal of objectionable material, as **Hand Patching**.

J. **Safety Edge.** Separate payment will not be made for constructing a safety edge. All costs associated with providing a safety edge including base preparation and additional equipment or modification to existing equipment will be included in the applicable unit prices for the related HMA mixtures.

K. **HMA.** The Engineer will measure, and the Department will pay for, **HMA**; and **HMA,Temp Pavt (mix type)** of the mix specified based on the weight placed, as supported by weigh tickets. The Engineer will adjust the unit price for HMA, of the mix specified, in accordance with the contract.

Section 502. HMA CRACK TREATMENT

502.01. Description. This work consists of treating cracks in Hot Mix Asphalt (HMA) surfaces using both a saw or rout and seal process and an overband process.

A. **Terminology.**

Primary Crack. A crack ⅛ inch to 1¼ inch in width with less than 25% of its length having secondary cracking.

Secondary Crack. A series of cracks running parallel to each other with no, or few interconnecting cracks to the primary crack.

502.02. Materials. Provide materials in accordance with the following:

Joint and Crack Sealants for Construction 914

A. **Saw or Rout and Seal.** Provide a hot poured, extra low modulus, joint and crack sealant product from the Qualified Products List. Follow manufacturer's recommendation for material installation.

B. **Overband.** Provide an overband crack fill asphalt rubber product from the Qualified Products List. Follow manufacturer's recommendation for material installation.

502.03. Construction.

A. **Equipment.** Provide equipment capable of meeting the requirements of this subsection.

1. **Compressed Air System.** Provide and use a compressed air system that produces a continuous, high-volume, high-pressure stream of clean, dry air to prepare cracks. Equip the air compressor with a moisture separator to remove oil and water from the air supply. Provide a compressor capable of producing at least 100 psi at a continuous air flow of 150 cfm.

2. **Melter Applicator.** Provide a melter applicator consisting of a boiler kettle equipped with pressure pump, hose, and applicator wand. Equip the unit with the following:

   a. Shutoff control on the applicator hose;
   b. Mechanical agitator in the kettle to provide continuous blending;
   c. Thermometers to monitor the material temperature and the heating oil temperature; and
   d. Thermostatic controls that allow the operator to regulate material temperature up to 425 °F.

3. **Application Wand.** Apply the material using either a wand followed by a V-shaped or U-shaped squeegee or a round application head with a concave underside.

B. **Pre-Production Meeting.** Before beginning work, conduct an on-site pre-production meeting with the Engineer to discuss the following:

1. Contractor's detailed work schedule;
2. Traffic control plan;
3. Required project documentation;
4. Review crack treatment methods criteria;
5. Inspection of the condition of equipment;
6. The Contractor's Quality Control (QC) Plan; and
7. The Contractor's designated Authorized Representative.

C. **Crack Preparation.** Clean and dry cracks using compressed air and other tools to remove loose dirt, vegetation, and deleterious material. Clean cracks no more than 10 minutes before filling. Any debris or vegetation removed from cracks in a curb and gutter section will be removed and disposed at no additional cost to the Department.

D. **Crack Treatment Methods.**

1. **Saw or Rout and Seal.** Treat primary transverse cracks in the pavement surface using the saw or rout and seal process. Treat primary transverse cracks in the shoulders unless otherwise directed.

   Saw or rout, clean, and fill all primary transverse cracks. The Department defines a transverse crack as a crack less than 10 degrees off of perpendicular to the centerline.

   The following cracks should not be sealed:

   a. Secondary cracks.
   b. Multiple nearby cracks which have raveled.
   c. Multiple cracks that include broken asphalt.

   Saw or rout all primary transverse cracks as defined above by creating a reservoir along the crack. Create the reservoir to a volume of at least 7.5 cubic inches per foot of crack and with a 1:1 width to depth ratio. Ensure the finished reservoir walls are vertical and the reservoir bottom is flat. Fill the reservoir such that the final level is flush with the pavement surface and spread uniformly over the entire length of the crack. The width of the overband, including the routed reservoir, shall be no more than 2 ½ inches wide with a thickness of ⅛ inch.

2. **Overband.** The Contractor will treat all other primary and secondary cracks with material placed in an overband configuration.

   Apply overband material to clean, dry cracks. Apply overband 4 inches wide, ±½ inch and from ⅛ inch to $^{3}/_{16}$ inch thick.

The Contractor may increase the maximum application width to 6 inches for coverage of multiple cracks, with Engineer approval.

Place temporary pavement markings before opening the road to traffic if overband material obliterates existing pavement markings.

Apply overband as follows unless otherwise required:

a. **Stand Alone Overband Crack Fill.** If no other surface treatment is required on the pavement, fill visible cracks in the road less than 1¼ inch wide.
b. **Micro-Surfacing Preparation.** If preparing the pavement for a micro-surface overlay, fill visible cracks in the road less than 1¼ inch wide. Allow to cure for a minimum of 3 days prior to placement of micro-surface.
c. **Chip Seal Preparation.** If preparing the pavement surface for a single or double chip seal, fill cracks with widths from ¼ inch to 1¼ inch or 3 feet or longer. Allow to cure for a minimum of 7 days prior to placement of chip seal.
d. **Paver Placed Surface Seal.** If preparing the pavement for a paver placed surface seal, fill cracks with widths from ¼ inch to 1¼ inch or 3 feet or longer. Allow to cure for a minimum of 14 days prior to placement of paver placed surface seal.
e. **HMA Ultra-Thin Overlay.** If preparing the pavement for an HMA ultra-thin overlay, fill visible cracks less than 1¼ inch wide. Allow to cure for a minimum of 14 days prior to placement of HMA ultra-thin overlay.

Do not seal the following cracks when preparing the pavement for micro-surfacing, chip seals, paver placed surface seals or HMA ultra-thin overlays:

1. Multiple nearby cracks which have raveled.
2. Multiple cracks that include broken asphalt.
3. Multiple longitudinal cracks in each wheel path.

E. **Weather Limitations.** Place material at air temperatures from 45 °F to 85 °F. Do not place material if moisture is present in the crack.

F. **Cure Time and Repair.** Allow the material to cool before opening the road to traffic. Apply de-tackifying solution, if required, to protect the uncured crack treatment material from tracking. Do not use blotting materials, including sand, aggregate, sawdust, or paper. Repair treated pavement areas, damaged by traffic at no additional cost to the Department.

G. **Quality Control (QC).** Provide and follow a QC plan for production and construction processes. Provide the Engineer a copy of the QC plan for review and approval, prior to the pre-production meeting. Maintain QC measures until the Engineer accepts the work.

Comply with the approved QC plan throughout the project and allow the Engineer access to work in progress for assurance review and testing. If the Engineer identifies a condition causing unsatisfactory crack treatment, immediately stop production and correct the work at no additional cost to the Department.

Ensure the QC plan addresses the following:

1. A detailed description explaining how field crews will determine primary transverse and all other primary and secondary cracks. Separately detail projects with multiple pavement sections;
2. The sealant material and equipment used to heat, handle, and apply sealant material in accordance with the manufacturer's specifications. Provide the material manufacturer's specifications to the Engineer upon request;
3. Saw or rout and seal operation reservoir configuration;
4. Procedures for crack cleaning;
5. Replacement criteria for cutting tools;
6. Controls implemented to ensure flying dust and debris is not directed toward adjacent traveled lanes, pedestrians, parked vehicles, or buildings;
7. An action plan for adjusting crack sealing operations to address actual environmental conditions if adverse environmental conditions occur; and
8. Proposed procedure for monitoring the work to ensure acceptance requirements are met.

H. **Acceptance.** Upon completion of work, schedule an inspection with the Engineer. The Engineer will note deficiencies, including areas exhibiting adhesion failure, cohesion failure, missed cracks, or other factors the Engineer determines unacceptable. Correct the unacceptable work. Notify the Engineer upon completion of corrective work.

502.04. Measurement and Payment.

Pay Item	**Pay Unit**
Overband Crack Fill, Lane	Lane Mile
Overband Crack Fill, Ramp	Lane Mile
HMA Crack Treatment, Lane	Lane Mile
HMA Crack Treatment, Ramp	Lane Mile

A. **Overband Crack Fill.** The Engineer will measure **Overband Crack Fill, Lane** along the centerline of each lane. This measurement includes traffic lanes, as defined in the Lane Mile Inventory, and any adjacent paved shoulders.

The Engineer will measure **Overband Crack Fill, Ramp** along the ramp centerline beginning at the 2-foot gore point including shoulders.

The unit prices for **Overband Crack Fill**, of the type required, include the cost of preparing and filling cracks using the overband method, providing the required documentation, corrective work, and temporary traffic markings.

B. **HMA Crack Treatment.** The Engineer will measure **HMA Crack Treatment, Lane** along the centerline of each lane. This measurement includes traffic lanes, as defined in the Lane Mile Inventory, and adjacent paved shoulders.

The Engineer will measure **HMA Crack Treatment, Ramp** along the ramp centerline beginning at the 2-foot gore point including shoulders.

The unit price for **HMA Crack Treatment,** of the type required, includes the cost of preparing, filling and sealing the cracks, including treating primary transverse cracks with the saw or rout and seal method, and treating all other primary and secondary cracks with the overband method.

Section 503. PAVER PLACED SURFACE SEAL

503.01. Description. This work consists of the surface preparation and application of a paver placed surface seal (PPSS).

503.02. Materials. Provide materials in accordance with the following.

Aggregate..... 902
Asphalt Emulsion, PPSS..... 904
Asphalt Binder..... 904

A. **Asphalt Binder Selection Criteria.** Provide PG Asphalt Binder in accordance with Table 503-1.

Table 503-1
Performance Graded Asphalt Binder Selection Criteria

Location	PG Asphalt Binder
North of M-72 in lower peninsula and the upper peninsula	PG 64-28P
South of M-72 (including M-72)	PG 70-28P
MDOT Metro Region only	PG 70-22P

B. **PPSS Mixture Design.** The mixture must be designed by a Department-approved laboratory. Design the mixture in accordance with Table 503-2 so the asphalt binder produces a film thickness of at least 10 microns. Calculate the film thickness in accordance with the National Center for Asphalt Technology publication *Hot Mix Asphalt Materials, Mixture Design and Construction*. Submit the mix design to the Engineer at least 7 days before beginning construction.

Do not use reclaimed material in the mixture.

C. **Mixture Design Documentation.** Provide the following documentation with the mixture design:

1. *Contractor Bituminous Mix Design Communication* (Form 1855);
2. *Sample Identification*, include with AWI sample (Form 1923);
3. Average maximum percent draindown for each test temperature (Report);
4. *Tensile Strength Worksheet* (Form 1937);
5. Calculation of film thickness (Report);
6. The material sources for the mixture design; and
7. Test results verifying the mixture meets the requirements in Table 503-2 and the specified film thickness.

Table 503-2 Mixture Requirements				
Mix Type	**Aggregate**	**% Asphalt Binder Content**	**Draindown Test (% Max) AASHTO T305 (a)**	**Moisture Sensitivity (% Min) AASHTO T283 (b)**
B	30SS	4.8–6.2	0.10	80
C	27SS	4.6–6.2	0.10	80

a. Conduct the draindown test at the JMF asphalt content plus 0.5 %. Test the draindown at the mixing temperature plus 27 °F but do not exceed 350 °F.
b. Compact specimens for AASHTO T283 testing using the superpave gyratory compactor (SGC) at 100 gyrations with target dimensions of 6 inches diameter × 3 ¾ inch ±⅛ inch height or 4 inch diameter × 2 ½ inch ± ⅛ inch height. Do not adjust the number of revolutions to target an air void range. Cure the loose bituminous surface course mixture 1 hour at the specified application temperature. The minimum time for vacuum saturation is 20 minutes. Subject specimens to freeze-thaw conditioning. If an anti-stripping agent is needed, report the amount and type with the mixture design.

503.03. Construction.

A. **Equipment.**

1. **Self-Priming Machine.** Provide a self-priming machine that sprays polymer modified emulsion membrane and places a PPSS over the membrane in a single pass, continuous application. The self-priming machine must not contact the polymer modified emulsion membrane before applying the PPSS. The self-priming machine must include the following:

   a. A receiving hopper with at least two heated, twin screw, and mix feed augers;
   b. An integral storage tank for the polymer modified asphalt emulsion;
   c. Twin expandable emulsion spray bars, immediately in front of the PPSS feed augers and ironing screed. The spray bars must be able to measure the application of polymer modified asphalt emulsion and monitor the rate of spray across the width of the paving pass; and
   d. A variable-width vibratory heated ironing screed that is adjustable and capable of providing positive and negative crowns to the thickness and cross section shown on the plans.

2. **Compacting Equipment.** Use at least two 10 ton steel-wheeled rollers meeting the requirements in subsection 501.03.A.5.

B. **Pre-Production Meeting.** Before beginning work, conduct an on-site pre-production meeting with the Engineer to discuss the following:

1. Work schedule;
2. Traffic control plan;
3. Equipment calibrations and adjustments;
4. Condition of equipment;
5. Quality control plan; and

6. Contractor's authorized representative.

C. **Weather and Seasonal Limitations.**

1. **Weather Limitations.** Place PPSS on dry pavement. Do not place PPSS if the air temperature is below 50 °F.

2. **Seasonal Limitations.** Place PPSS from May 1 to October 15.

D. **PPSS Placement.**

1. **Surface Preparation.** Perform all surface preparation prior to applying the wearing course.

   Clean the existing surface of loose materials, vegetation, dirt, dust, mud and other deleterious materials. Remove animal remains before placing the mixture.

   Protect drainage structures, monument boxes, water shut-offs, and other existing structures using tarpaper or other protective coverings approved by the Engineer. Remove the protective coverings before opening to traffic.

   Remove pavement markings.

2. **Emulsion Membrane.** Apply a polymer modified asphalt emulsion membrane at a rate of 0.20 gallons per square yard. Field adjustments of the emulsion application rate for changes in existing pavement surface conditions or limitations of the HMA mix design will be allowed. Apply the polymer modified asphalt emulsion membrane at a temperature from 140 °F to 175 °F.

3. **PPSS.** Apply Type B surface course mixtures at a rate of 73 pounds per square yard and Type C surface course mixtures at a rate of 90 pounds per square yard. Use an application rate that provides a PPSS thickness that prevents the fracture of aggregate by the screed. Apply the PPSS mix at a temperature from 300 °F to 330 °F and compact before the placed surface course cools to 185 °F.

4. **Rough Joints.** At no additional cost to the Department, repair transverse and longitudinal construction joints resulting from PPSS operations that cause bumps or poor riding joints, as determined by the Engineer. The repairs must meet the approval of the Engineer.

E. **Quality Control (QC).** Prepare and implement a QC plan, in accordance with requirements of section 501, that will detail QC operations for production and construction. Submit the QC plan to the Engineer for review and approval before the pre-production meeting.

Notify the Engineer immediately and stop mixture production if the QC test results exceed any tolerance shown in Table 503-3. Identify the cause of the deviation and determine the corrective action necessary to bring the mixture into compliance prior to resuming mixture placement.

Perform, at a minimum, the following QC tests.

1. **PPSS Surface Course.** Perform three yield checks each day to determine the application rate of the HMA surface course. The yield must be within 5 pounds per square yard of the target application rate.

2. **PPSS Mixture.** Take a sample of the PPSS mixture from the truck transports in accordance with ASTM D979/D979M and reduce the sample size in accordance with MTM 313. Test this sample before beginning production the following day. Test results must fall within the quality control tolerances specified in Table 503-3.

Table 503-3
PPSS Quality Control Tolerances

Sieve Size	Mix Type B	Mix Type C
	Tolerance, % (a)	Tolerance, % (a)
¾ in	—	—
½ in	—	±5
⅜ in	±5	±5
No. 4	±5	±5
No. 8	±4	±4
No. 200	±1	±1
PG Asphalt Binder Content, %	±0.4	
Film Thickness	10 microns (Min)	

a. Tolerance in reference to values listed in Table 902-7.

F. **Acceptance.** Review completed portions of the PPSS placement with the Engineer for compliance with the contract. If the Engineer determines the PPSS does not comply with the contract, repair defects at no additional cost to the Department.

503.04. Measurement and Payment.

Pay Item	**Pay Unit**
Paver Placed Surface Seal, Type __	Square Yard

The unit price for **Paver Placed Surface Seal**, of the type required, includes the cost of preparing the surface, placing temporary pavement markings, and placing a membrane and paver placed surface seal course for full width coverage, except that the Department will pay separately for removing pavement markings in accordance with subsection 812.04.

Section 504. MICRO-SURFACING

504.01. Description. This work consists of the surface preparation and application of a single course micro-surfacing or multiple course micro-surfacing.

504.02. Materials. Provide materials in accordance with the following:

Portland Cement, Type I 901
Fine Aggregates, 2FA, 3FA..... 902
Bond Coat, CSS-1hM, CSS-1mM 904
Water..... 911

A. **Aggregate.** Provide aggregates complying with gradation and physical requirements in Tables 902-7 and 902-8.

Use 3FA fine aggregate in micro-surfacing mixture for rut filling.

Use 3FA or 2FA fine aggregates in micro-surfacing mixtures for micro-surfacing and longitudinal micro-surfacing.

Use 2FA fine aggregate in micro-surfacing mixture for single-course applications.

Aggregate used for micro-surfacing must be screened at the project site to ensure aggregate being introduced into the micro-surface mixture is not larger than the top size aggregate allowed in the mix design. The aggregate must be screened directly into the material transport units or micro-surface machine(s). The aggregate screening unit must be capable of producing adequate tonnage to maintain project production.

B. **Mix Design.** Provide micro-surfacing mixtures consisting of a blend of polymerized asphalt emulsion, fine aggregate, portland cement, water, and other additives.

The mixture must be designed by a laboratory that participates in AASHTO re:source's Proficiency Sample Program (PSP). Submit the mix design to the Engineer at least 7 days before beginning construction.

Table 504-1
Micro-surfacing Mix Design Criteria

Test Method	Parameter	Specification
ISSA TB-114	Wet Stripping	≥90%
ISSA TB-100	Wet Track Abrasion Loss	—
	One Hour Soak	≤50 g/ft²
	Six Day Soak	≤75 g/ft²
ISSA TB-144	Saturated Abrasion Compatibility	≤3 g loss
ISSA TB-113	Mix Time at 77 °F	Controllable to ≥120 s
	Mix Time at 100 °F	Controllable to ≥35 s

Provide a Job Mix Formula (JMF), meeting the limits shown in Table 504-2, to the Engineer at the pre-production meeting.

Submit a new mix design for changes in aggregate or asphalt emulsion sources.

Table 504-2 JMF Limits	
Test Method	**Specification**
Asphalt Binder Content (Residual)	7.5%–9.0%, dry weight, 2FA aggregate
	7.0%–8.5%, dry weight, 3FA aggregate
Mineral Filler	0.25%–3.0%, dry weight aggregate

C. **Mix Design Documentation.** Provide the following information in the final mix design:

1. Proportion of each material;
2. Sources of each material including:
   a. Aggregate;
   b. Name and pit number;
   c. Gradation;
   d. Sand equivalence; and
   e. Angularity Index (AI);
3. Field simulation tests including:
   a. Wet stripping tests;
   b. Wet track abrasion loss;
   c. Saturated abrasion compatibility; and
   d. Trial mix time at 77 °F and 100 °F;
4. Interpretation of results and the determination of a JMF including:
   a. Mineral filler, percent (minimum and maximum);
   b. Water, including aggregate moisture, percent (minimum and maximum);
   c. Mix set additive, percent;
   d. Modified emulsion in mix, percent;
   e. Residual asphalt content of modified emulsion, percent; and
   f. Residual asphalt content in mix, percent;
5. ADT for the pavement sections where placing mix; and
6. Mix designer's signature and date.

D. **Bond Coat.** Use the same emulsion for bond coat as used in production of the mixture.

504.03. Construction.

A. **Equipment.** Provide equipment that can produce a specification product.

1. **Mixing Machine.** Provide at least one self-propelled, front feed, continuous loading mixing machine equipped and operated as follows:

a. A positive connection conveyer belt aggregate delivery system and an interconnected positive displacement, water-jacketed gear pump to proportion aggregate and asphalt emulsion;
b. Continuous flow, twin shaft, multi-blade type pugmill at least 50 inches long;
c. Mineral filler feed that drops mineral filler on the aggregate before discharging into the pugmill;
d. Asphalt emulsion introduced within the first one-third of the mixer length to ensure mixing of materials before exiting the pugmil;
e. Rate indicators for proportioning each material, readily accessible and positioned to allow determination of the quantity of each material. Calibrate and test each material rate indicator to ensure proper operation before production;
f. A water pressure system and nozzle type spray bar to provide water spray in front of and outside the spreader box. Apply water to dampen the existing pavement surface without causing free flowing water in front of the spreader box;
g. Opposite side driving stations on the front to optimize longitudinal alignment during placement; and
h. Remote forward speed control at the rear-mixing platform for the back operator to control forward speed and level of mixture in the spreader box.

Provide enough transports to ensure continuous operation during mix production and application. Use transport units with belt-type aggregate delivery systems, emulsion storage tanks, and water storage tanks to proportionally mix aggregate delivered by each transport.

The Contractor may use truck-mounted batch-type machines on projects or sections of projects smaller than 15,000 square yards. Provide at least two truck-mounted batch-type machines. Stop mix production if delays exceed 15 minutes.

Calibrate mixing machines before use. Maintain documentation of the calibrations of each material-metering device at various settings. Supply materials and equipment, including scales and containers, for calibration. Recalibrate mixing machines after changes in aggregate or asphalt emulsion sources.

2. **Spreader Box.** Provide a mechanical-type spreader box, attached to the mixer and equipped with paddles mounted on adjustable shafts to continually agitate and distribute the mixture. Equip spreader boxes with the following:

a. Front and rear flexible seals capable of maintaining direct contact with the road;
b. A secondary strike-off, attached to the spreader box capable of providing a finished smooth surface texture on the final or surface pass; and
c. A drag capable of producing a uniform finish.

Replace the drag if mixture builds up.

3. **Rut Box.** Use an Engineer-approved steel V-configuration screed rut box designed and manufactured to fill ruts to perform micro-surface rut filling applications. Ensure a mixture spread width from 5 feet to 6 feet, and use a secondary strike-off to control crown on the rut box. A third strike-off may be used to control texture.

4. **Longitudinal Box**. Provide a steel screed box designed and manufactured to distribute the mixture to perform micro-surface longitudinal application. The device must be capable of spreading mixture 2 to 4 feet wide and use a secondary strike-off to control crown on the box.

5. **Miscellaneous Equipment.** Provide hand squeegees, shovels, and other equipment to perform the work. Provide cleaning equipment for surface preparation, including power brooms, air compressors, water flushing equipment, and hand brooms.

6. **Lights on Equipment.** Equip power brooms, distributors, and truck mount spreaders with at least one Department-approved, flashing, rotating, or oscillating amber light, visible in every direction. Equip continuous spreader units with one light on each side of the spreader.

B. **Pre-Production Meeting.** Before beginning work, conduct an on-site pre-production meeting with the Engineer to discuss the following:

1. Detailed work schedule;
2. Traffic control plan;
3. Plan for filling corrugations.
4. Equipment calibration;
5. Equipment calibration calculations;
6.. Equipment inspection, including transport units;
7. Test strips to check the material and demonstrate placement procedures;
8. JMF; and
9. Availability of materials.

If using multiple machines, lay a test strip with each machine at the time of the pre-production meeting. Immediately upon completion of the test section the Engineer will evaluate the test area to determine if the application rates are acceptable. Full production work may only begin after the Engineer accepts the test section.

C. **Surface Preparation.** Immediately before surfacing operations, remove pavement markings using an abrasion method.

Clean existing surface of loose materials, vegetation, dirt, dust, mud and other deleterious materials. Remove animal remains before placing the mixture.

Protect drainage structures, monument boxes, water shut-offs, and other existing structures during bond coat and mix application.

Apply bond coat on concrete surfaces. Mix bond coat with one part emulsion to two parts water. Apply the bond coat at a rate from 0.035 gallons per square yard to 0.070 gallons per square yard, without excessive run off. Allow the bond coat to cure before placing mixture.

Before placing the mixture, establish, identify, and maintain, 1,000-foot intervals until project completion.

D. **Application Methods and Rates.** Apply micro-surface mixtures to fill minor cracks and ruts in the roadbed, to construct a uniform surface with straight longitudinal joints, transverse joints, and edges.

1. **Rutfilling.** Fill ruts if the rut is at least ½ inch deep and the contract includes the pay items for either standard micro-surfacing or rut filling. Use a 3FA mixture for rut filling and apply using a rut box for each wheel track.

   Maintain a clean overlap and straight edges between wheel tracks. Limit each pass of rut filling to no deeper than 1 inch. For each 1 inch of mix, provide an additional ⅛ inch crown.

2. **Micro-Surface Longitudinal.** Fill centerline corrugations or longitudinal joints. When filling corrugations, fill the corrugations to allow new corrugations to be established. Apply at least one course of 2FA mix at the needed application rate.

3. **Micro-Surfacing.** Select one of the following application methods for micro-surfacing:

   a. Apply at least one course of 3FA mix to the pavement surface, as indicated in the plans, at an average application rate of at least 35 pounds per square yard, by weight of dry aggregate. Apply 3FA mix to pavement surface, as indicated in the plans, at a rate of at least 22 pounds per square yard, by weight of dry aggregate.
   b. Apply at least two courses of 2FA mix to the pavement surface, as indicated in the plans, at an average combined application rate of at least 30 pounds per square yard, by weight of dry aggregate. Apply 2FA mix to pavement surface, as indicated in the plans, at a rate of at least 17 pounds per square yard, by weight of dry aggregate.
   c. If using to fill shoulder corrugations, fill the corrugation area with a separate pass of micro-surfacing material prior to application of the top course. When a chip seal is applied to the shoulder as part of the project, a separate pass of micro-surfacing will not be required prior to application of top course. Fill the corrugations to allow new corrugations to be established. Only a single course of micro-surfacing is required to fill shoulder corrugations.

4. **Single Course Micro-Surfacing.** Apply a single course using 2FA mix at an average minimum application rate of 24 pounds per square yard, by weight of dry aggregate, to the pavement surface, as indicated in the plans.

E. **Surface Quality.**

1. **Joint Construction.** Place longitudinal construction joints and lane edges to coincide with the planned painted lane lines. Construct longitudinal joints with less than 3 inches overlap on adjacent passes and no more than ⅜ inch thick overlap as measured with a 10-foot straight edge. To prevent water from collecting on the pavement surface, place successive passes on the up-slope side of the overlap.

   Construct neat and uniform transverse joints with less than a ⅛ inch difference in elevation across the joint as measured with a 10-foot straight edge. Provide neat and uniform lane edges with no greater than 2 inches of horizontal variance over 100 feet. Immediately stop work to correct defective joints or edges and obtain the Engineer's approval before resuming work.

2. **Cross Section.** Restore the driving lane cross section to within ¼ inch of the planned elevation, measured transversely across the pavement with a 10-foot straight edge or areas of the segment within 6 inches of the edge line, lane line, or centerline.

F. **Cure Time and Repair.** Do not allow traffic on the mixture until it cures. Ensure the new surface can carry normal traffic without damage within 1 hour of application. Protect the new surface from damage at intersections and driveways. Repair damage to the mixture caused by traffic at no additional cost to the Department.

G. **Weather and Seasonal Limitations.**

1. **Weather Limitations.** Place the mixture when the air and pavement temperatures reach at least 45 °F.

   Do not place mixture in rain, inclement weather, or when the air temperature is forecast to be below 32 °F within 24 hours of work completion.

2. **Seasonal Limitations.** Place mixture from June 1 to September 15 in the Upper Peninsula and from May 1 to October 15 in the Lower Peninsula.

H. **Quality Control (QC).** Provide a finished surface free of excessive scratch marks, tears, rippling, and other surface irregularities, as determined by the Engineer. Do not leave ripples greater than ⅛ inch as measured by a 10-foot straight edge in accordance with MTM 722. Do not leave tear marks greater than ½ inch wide and 4 inches long, or other marks greater than 1 inch wide and 1 inch long. If the finished surface exceeds the specified tolerances, stop work immediately and correct irregularities. Review corrective action with the Engineer before resuming production.

Produce a mixture that will meet the JMF and the QC tolerances specified in Table 504-3. Notify the Engineer immediately if QC test results exceed the tolerances specified in Table 504-3, and stop mix production. Identify the cause of the deviation and determine the corrective action

necessary to bring the mixture into compliance. Obtain the Engineer's approval before resuming work.

The Engineer reserves the right to verify QC test accuracy and production controls.

If the Engineer identifies a condition that causes an unsatisfactory micro-surfacing treatment, immediately stop production work and correct the defect at no additional cost to the Department.

Table 504-3 Micro-Surfacing Quality Control Tolerances							
Aggregate Gradation Tolerances (±)							
Sieve Size	No. 4	No. 8	No. 16	No. 30	No. 50	No. 100	No. 200
Tolerance	5.0%	5.0%	5.0%	5.0%	4.0%	3.0%	2.0%

General Quality Control Tolerances (±)	
Parameter	**Tolerance**
Asphalt Cement Content Single Test	0.5% from JMF
Asphalt Cement Content Daily Average	0.2% from JMF
Application Rate (as determined by 1,000 ft yield checks)	2 lb/yd²
Sand Equivalent Test (ASTM D2419)	7% from JMF

1. **QC Plan Contents.** Provide and follow a QC plan, in accordance with requirements of section 501, that will maintain QC for production and construction processes. Provide the Engineer a copy of the QC plan for review and approval, before the pre-production meeting.

   Include, at a minimum, the following items:

   a. The source of materials used on the project;
   b. Sampling and testing methods used to determine compliance with material specifications;
   c. A detailed description of how field crews will determine pavement rut depths and locations. Detail each section of multiple pavement sections separately;
   d. The equipment to be used on the project;
   e. Calibration method used to determine compliance with the mix design (JMF);
   f. Pavement cleaning and preparation procedure;
   g. Plan for protecting micro surfacing mixture from damage by traffic;
   h. Procedure for monitoring initial acceptance requirements; and
   i. An action plan demonstrating adjustments of the micro-surfacing operation for adverse environmental conditions.

2. **Minimum QC Sampling and Testing Frequency.** Include the following minimum QC sampling and testing frequencies in the QC Plan.

   a. **Fine Aggregate Gradation.** Sample fine aggregate from the project stockpile and test for gradation. Perform one test per 500 tons of fine aggregate or one test per day of mixture production, whichever is less.

b. **Sand Equivalent Test (ASTM D2419).** Perform at least one sand equivalency test for each mixture design.

c. **Asphalt Content.** Calculate the percent asphalt content of the mixture at least three times per day, on a random basis, using the equipment counter readings.

d. **Application Rate.** Calculate the yield of the course placed at least three times per day, on a random basis, using the equipment counter readings.

3. **Documentation.** Complete a daily report that includes the following information:

a. Control section;
b. Job number;
c. Route;
d. Engineer;
e. Date;
f. Air temperature;
g. Control settings;
h. Calibration values;
i. Unit weight of emulsion (pounds per gallon);
j. Percent residue in emulsion;
k. Beginning and ending intervals;
l. Counter readings (beginning, ending, and total difference);
m. Length and width;
n. Total area (square yards);
o. Aggregate weight;
p. Gallons of emulsion;
q. Percent of each material including asphalt cement;
r. Application rate, (pounds per square yard);
s. Combined application rate, (pounds per square yard);
t. JMF (percent portland cement, percent emulsion, gradations, percent asphalt cement);
u. Contractor's authorized signature;
v. Calibration forms;
w. QC aggregate gradations;
x. Materials acceptance documentation;
y. Asphalt emulsion bill of lading; and
z. QC and equivalent test result(s).

If truck-mounted machines are used, complete a separate daily report for each machine.

4. **Field Tests.** Before opening micro-surfacing to traffic, perform both of the following field tests:

a. Probe the entire depth of the micro-surfacing to verify no free emulsion exists in the mixture.

b. Place a white absorbent paper blotter on the micro-surfacing to confirm the presence of clear water without brown staining from unbroken emulsion.

I. **Acceptance.** Allow the Engineer access to in-progress work for quality assurance review and testing.

1. **Field Inspection Acceptance.** Upon completion of work, schedule an inspection with the Engineer. The Engineer will note deficiencies, including areas exhibiting adhesion or cohesion failure. Reconstruct work identified by the Engineer as unacceptable.

504.04. Measurement and Payment.

Pay Item	**Pay Unit**
Micro-Surface, Rutfilling	Ton
Micro-Surface	Square Yard
Micro-Surface, Single Cse	Square Yard
Micro-Surface, Longit	Foot

A. **General.** The unit prices for **Micro-Surface**, regardless of the type required, include cleaning existing pavement; applying a bond coat; temporary pavement markings; stationing; corrective action; and traffic control to complete corrective action.

B. **Micro-Surface Rutfilling.** The Engineer will measure **Micro-Surface, Rutfilling** based on the dry weight of fine aggregate in the mix. The unit price for **Micro-Surface, Rutfilling** includes placing mix over each wheel rut to create full lane coverage.

C. **Micro-Surface.** The unit price for **Micro-Surface** includes all material, equipment, and labor for preparing the surface, placing temporary pavement markings, placing the micro-surfacing mixture, applying a leveling course a surface course filling shoulder or centerline corrugations, or all, for full width coverage as specified in the contract.

D. **Micro-Surface, Single Course.** The unit price for **Micro Surface, Single Cse** includes all material, equipment, labor for preparing the surface, placing temporary pavement markings, placing the micro-surfacing mix, filling shoulder or centerline corrugations, and applying a single course of mixture for full width coverage as specified in the contract.

E. **Micro-Surface, Longitudinal.** The unit price for **Micro-Surface, Longit** includes all material, equipment, labor for preparing the surface and placing the micro-surfacing mixture at the width specified in the contract.

F. **Pavement Marking Removal.** The Department will pay separately for removing pavement markings in accordance with subsection 812.04.

Section 505. CHIP SEALS

505.01. Description. This work consists of the surface preparation and application of a single chip seal, a double chip seal, or shoulder chip seal.

505.02. Materials. Provide materials in accordance with the following:

Coarse Aggregate, 34CS, CS-T..... 902
Bond Coat, CSEA, CRS-2M..... 904

The Department will waive the AWI requirement on shoulders or when used as an interlayer.

For jobs north of M-46 with ADT<5000 or any job where the chip seal is being used as an interlayer, CRS-2M is an approved alternate.

505.03. Construction.

A. **Equipment.** Provide equipment capable of producing and placing a product meeting the requirements of this section.

1. **Pressure Distributor.** Provide a pressure distributor with a computerized application rate and speed control, capable of maintaining the asphalt emulsion at the temperature required by the contract. Ensure the control has a radar ground-sensing device that controls the application rate regardless of ground speed and spray bar width. Ensure the spray bar nozzles produce a uniform, triple-lap application fan spray, with instantaneous shutoff and no dripping. Ensure each pressure distributor can maintain the required application rate within ±0.015 gallons per square yard for each load.

2. **Chip Spreader.** Provide a self-propelled chip spreader equipped with a computerized spread control, pneumatic tires, and a screen to remove oversized material.

3. **Compacting Equipment.** Provide at least three self-propelled pneumatic-tired rollers, each weighing at least 8 tons.

4. **Brooms.** Provide motorized brooming equipment, capable of cleaning the road surface before treatment and removing loose particles after treatment. Provide pick-up sweepers to clean road surfaces adjacent to lawns or roadways with curb and gutter.

5. **Pilot Car.** Provide a pilot car equipped with a sign that reads “Pilot Car — Follow Me” in accordance with MDOT Sign Standard G20-4. Mount the sign in a conspicuous position on the rear of the vehicle.

6. **Lights on Equipment.** Equip self-propelled equipment with at least one Department-approved, flashing, rotating, or oscillating amber light, visible in every direction. Equip chip spreaders with one light on each side of the spreader.

B. **Pre-Production Meeting.** Before beginning work, conduct an on-site pre-production meeting with the Engineer to discuss the following:

1. Review of the work schedule;
2. Examination of the traffic control plan;
3. Review of equipment calibration and adjustments;
4. Inspection of conditions of materials and equipment, including transport units;
5. Submission of the mix design including JMF and a "Design for Intended Yield," containing the aggregate gradation, LA Abrasion Resistance, loose unit weight, and application rate of asphalt emulsion and aggregate;
6. Submission of test results for flat and elongated ratio. Collect samples from one of the following locations:
   a. The shipping face of the stockpile at the production source, or
   b. The job site stockpile;
7. Discussion of the Quality Control (QC) plan;
8. Designation of the Contractor's authorized representative; and
9. Provide unit prices for use in determining price adjustments for asphalt emulsion and coarse aggregate.

C. **Weather and Seasonal Limitations.**

1. **Weather Limitations.** Place the chip seal when pavement and ambient temperatures are at least 55 °F. Do not place chip seal if air temperatures are forecast below 40 °F within 24 hours of completing placement. Do not apply chip seals in foggy or rainy weather, or if the existing pavement temperature is equal to or greater than 130 °F.

2. **Single Chip Seals and Shoulder Chip Seals Seasonal Limitations.** Place single chip seals and shoulder chip seals in accordance with the following:

   a. From June 1 to August 15, in the Upper Peninsula;
   b. From May 15 to September 1, in the Lower Peninsula north of M-46; and
   c. From May 15 to September 15, in the Lower Peninsula south of M-46.

3. **Double Chip Seal Seasonal Limitations.** Place double chip seals in accordance with the following:

   a. From June 1 to August 1, in the Upper Peninsula;
   b. From May 15 to August 15, in the Lower Peninsula north of M-46; and
   c. From May 15 to September 1, in the Lower Peninsula south of M-46.

D. **Placement Operation.**

1. **Signing.** Post signs along the roadway reading, "Loose Gravel," FHWA (W8-7), and mount a 35 mph speed plaque below the sign. Place the signs at no greater than ½-mile intervals throughout the length of the project.

2. **Protecting Utility Castings and Raised Pavement Markers.** Before beginning the chip seal operation, protect utility castings and raised pavement markers using other protective coverings approved by the Engineer. Remove the protective coverings before sweeping and opening to traffic.

3. **Preparing Pavement Surface.** Prepare the pavement surface to receive the chip seal. Remove cold plastic pavement markings using an abrasion method. Clean pavements requiring treatment with a motorized power broom to remove loose material. Use a hand broom to clean cracks and other areas inaccessible by power broom. Use pick-up sweepers adjacent to lawns or roadways with curb and gutter.

4. **Equipment Operation.** Operate vehicles and equipment involved in the chip sealing as close together as possible. Spread the aggregate to cover the asphalt emulsion within 30 seconds of application. Do not allow the chip spreader to trail the emulsion distributor by more than 150 feet.

5. **Dust Control.** During normal traffic operations, wet broom, or lightly fog seal the roadway to control dust, as required by the Engineer. If dusty conditions continue, pre-coat the aggregate. Pre-coat the aggregate with 0.75 percent, by mass, residual asphalt.

   The Contractor may perform pre-coating in a weight-batch type, continuous mixing type, or drum-type hot mix plant, using PG 64-22 asphalt binder or CSS-1h emulsion.

6. **Loose Stone.** During normal traffic operations, damage to motorists' vehicles due to loose stone picked up off the surface is not acceptable. Broom or fog seal the roadway until the condition is eliminated.

7. **Bleeding or Flushing.** During normal traffic operations, bleeding or moderate flushing is not acceptable. Sand and sweep the roadway to eliminate bleeding or moderate flushing. If sanding and sweeping do not eliminate bleeding or moderate flushing, apply, roll, and broom a heated aggregate with the physical properties specified in Table 902-8.

8. **Longitudinal Construction Joints.**

   a. **Longitudinal Construction Joints in Single Chip Seal.** Where corrugations are not present, construct longitudinal construction joints in single chip seal to coincide with painted lane lines or at the outside edge of the shoulder. Where corrugations are present, construct joints at the outside edge of the far side of the corrugation on the first pass.

b. **Longitudinal Construction Joints in Double Chip Seal.** Where corrugations are not present, construct longitudinal construction joints in the first course of a double chip seal to overlap the painted lane lines by 6 inches, and in the second course to coincide with the original painted lane line locations. Where corrugations are present, construct joints at the outside edge of the far side of the corrugation on the first pass. Construct joints at the outside edge of the opposite side of the corrugation for the second application.

c. **Longitudinal Construction Joints in Shoulder Chip Seal.** Construct the longitudinal construction joint in shoulder chip seal at the edge of the driving lane or at a location requiring a minimal overlap without extending onto the driving lane.

9. **Rolling.** Roll the aggregate after spreading. Allow no more than 2 minutes between the spreading of aggregate and completion of initial rolling. Use the rollers in a longitudinal direction at a speed no greater than 5 mph. Ensure each roller travels over the aggregate three times with the final pass in the direction of the chip spreader.

10. **Sweeping after Placement.** After chip seal placement, perform an initial sweep of the construction traffic control zone before opening to traffic. Allow a minimum waiting period of 30 minutes between application of the chip seal and initial sweeping. Additional sweeping to remove loose stones after opening to traffic will be required as determined by the Engineer. The Contractor may use an arrow board, in bar mode, pulled behind a vehicle trailing the sweeping equipment. Conduct sweeping so loose aggregate does not migrate back onto the pavement. Use a pick-up sweeper to remove loose aggregate adjacent to guardrails, lawns, curbs, curbed driveways, and curbed intersections.

11. **Cure Time and Repairs.** For double chip seals, wait at least 24 hours between completion of the first course and application of the second course.

    Do not allow traffic on the new surface until it cures. Repair traffic damage to the new chip seal surface at no additional cost to the Department.

    Grind the surface and lightly apply a fog seal to eliminate bumps or poor riding surfaces caused by transverse or longitudinal construction joints from the chip seal application.

    Readjust the spray bar and nozzles if longitudinal grooves or ridges in the surface cause an asymmetric appearance.

E. **Application Rates.** Apply the asphalt emulsion followed by a uniform application of coarse aggregate.

Notify the Engineer immediately if the coarse aggregate gradation, or existing pavement surface conditions, necessitate an adjustment to the JMF target rate. Document the new JMF rates by stationing.

1. **Asphalt Emulsion.**

a. Single Chip Seal. Apply asphalt emulsion from 0.39 gallons per square yard to 0.46 gallons per square yard. Apply the asphalt emulsion at a temperature from 170 °F to 190 °F.
b. Double Chip Seal. Apply asphalt emulsion from 0.28 gallons per square yard to 0.32 gallons per square yard for the top course. Apply the first course as a Single Chip Seal according to 505.03.E.1.a.

2. **Coarse Aggregate.**

a. Single Chip Seal. Apply coarse aggregate from 20 pounds per square yard to 24 pounds per square yard.
b. Double Chip Seal. Apply course aggregate from 16 pounds per square yard to 20 pounds per square yard for the top course. Apply the first course as a Single Chip Seal according to 505.03.E.2.a.

F. **Documentation.**

1. **Daily Report.** Submit a daily report to the Engineer with the following information:

a. Control section;
b. Project number;
c. County;
d. Route;
e. Engineer;
f. Date;
g. Detailed weather information;
h. Pavement temperature;
i. Asphalt emulsion application temperature;
j. Beginning and ending stations (placement and brooming);
k. Notification of mix design change;
l. Aggregate gradation and moisture content (at least one per day); and
m. Signature of the Contractor's authorized representative,

2. **Miscellaneous.** Document the following as required:

a. Load tickets for coarse aggregates and asphalt emulsion; and
b. Changes in the design to the intended yield.

G. **Quality Control (QC).** If the Engineer identifies conditions that cause an unsatisfactory chip seal, immediately stop production and begin corrective action, at no additional cost to the Department. Maintain QC measures until the Engineer accepts the work.

1. **Quality Control Plan.**

   Establish and maintain an effective QC plan. Ensure the QC plan, details procedures, and organization to produce the required single, double, and shoulder chip seal operations. Provide the Engineer a copy of the QC plan for review and approval, prior to the pre-production meeting. Comply with the Engineer-approved QC plan for the duration of the project and allow the Engineer access to in-progress work for Quality Assurance review and testing.

   Ensure the QC plan addresses at least the following:

   a. Materials;
   b. Sampling and testing methods to determine compliance with material specifications;
   c. Equipment;
   d. Calibration method to determine compliance with the application rates;
   e. Procedures for pavement cleaning and preparation;
   f. Controls implemented to ensure the chip seal material cures or sets up before opening to traffic;
   g. Proposed procedure for monitoring initial acceptance requirements;
   h. Dust control;
   i. Bleeding;
   j. Rough joints;
   k. Surface patterns;
   l. Procedures to ensure that both the initial and final sweeping are completed in a manner that prevents damage to vehicles; and
   m. An action plan, demonstrating how the chip seal operation will be adjusted for adverse environmental conditions.

2. **QC Sampling and Testing.** Perform the following minimum QC tests during chip seal placement.

   a. **Coarse Aggregate.** Determine the actual application rate by placing a tarp over 1 square yard of pavement, applying coarse aggregate to the pavement in a production run, retrieving the aggregate placed on the tarp, and weighing the coarse aggregate.

      Collect one sample from the project aggregate stockpile each day of production, and perform a sieve analysis. Ensure sieve analysis results meet the requirements of Table 902-7 and fall within the quality control tolerances of Table 505-1 to substantiate the design for intended yield.

Table 505-1 Chip Seal Quality Control Tolerances	
Parameter	**Tolerance**
⅜ in sieve	−5.0%
No. 4 sieve	+5.0%
Aggregate Application rate	±1 pound per square yard of the required JMF application rate
Emulsion Application Rate	±0.01 gallon per square yard of the JMF target rate

b. **Emulsion.** Determine the actual application rate using a 1,000 foot yield check.

H. **Acceptance.**

1. **Field Inspection Acceptance.** Upon completion of work, schedule an inspection with the Engineer. The Engineer will note deficiencies, including areas exhibiting adhesion failure, cohesion failure, excessive stone, loss of stone, or other factors the Engineer identifies as unacceptable. Correct work the Engineer determines unacceptable.

2. **Delayed Acceptance.** At least 30 days after placing the single chip seal, double chip seal, or shoulder chip seal, the Engineer, with the Contractor, will inspect the project for surface flushing, surface patterns, or loss of stone. If the Engineer determines the work includes these deficiencies, correct the work within 7 working days of the review, or by an agreed upon date, and at no additional cost to the Department.

505.04. Measurement and Payment.

Pay Item	**Pay Unit**
Seal, Single Chip	Square Yard
Seal, Double Chip	Square Yard
Seal, Shld Chip	Square Yard

A. **Price Adjustment.** The Department will not make adjustments in the unit price for chip seal if the specified application rates for asphalt emulsion and coarse aggregate are within the specified ranges.

The Department may make an adjustment for an Engineer-approved revision to the application rates of asphalt emulsion and coarse aggregate, if the rates are outside of the specified ranges. The Department will limit the unit price adjustment to the material costs outside the specified ranges.

Provide unit prices for use in determining price adjustments for asphalt emulsion and coarse aggregate at the pre-construction meeting.

B. **Seal, Single Chip.** The unit price for **Seal, Single Chip** includes the cost of placing a single application of asphalt emulsion and coarse aggregate to a pavement and the accompanying shoulders, and material sampling and testing, surface preparation, brooming, and documentation.

C. **Seal, Double Chip.** The unit price for **Seal, Double Chip** includes the cost of placing a double application of asphalt emulsion and coarse aggregate to a pavement and the accompanying shoulders, and material sampling and testing, surface preparation, brooming, and documentation.

D. **Seal, Shoulder Chip.** The unit price for **Seal, Shld Chip** includes the cost of placing a single application of asphalt emulsion and coarse aggregate to shoulders and material sampling and testing, surface preparation, brooming, and documentation.

E. **Pavement Marking Removal.** The Department will pay separately for removing pavement markings in accordance with subsection 812.04.

Section 506. SLURRY SEAL

506.01. Description. This work consists of preparing the surface and applying a slurry seal mixture.

506.02. Materials. Provide material in accordance with the following:

Type I Portland Cement 901
Fine Aggregate, 2FA 902
Bond Coat, CSS-1h 904
Water 911

The Engineer will waive the cement mixing test for Bond Coats, CSS-1h.

A. **Mix Design Requirements.** Provide a slurry seal mix consisting of asphalt emulsion, fine aggregate, portland cement, water, and other additives. The mixture must be designed by a Department-approved laboratory. Mix additives may be used to provide additional control of the quick set properties and to increase adhesion. List additives as part of the mix design. Submit the mix design to the Engineer at least 14 days before beginning construction.

Submit a new mix design for any change in aggregate or asphalt emulsion sources.

Verify the compatibility and proportions of the fine aggregate, asphalt emulsion, portland cement, and additives.

From the mix design, develop a Job Mix Formula (JMF) showing the proportions of each material. The JMF must comply with ASTM D3910 for consistency, set time, cure time, and wet track abrasion.

Design a JMF with a residual asphalt binder content from 9.0 percent to 11.0 percent of the aggregate dry weight, and with a cement content from 0.5 percent to 3.0 percent of the aggregate dry weight.

1. **Mix Design Documentation.** Include all of the following in the mix design:

   a. Sources of individual materials;
   b. Aggregate properties including gradation, sand equivalence, and angularity index (A.I.);
   c. Test results for the following parameters as tested in accordance with ASTM D3910:

      i. Consistency test;
      ii. Set time;
      iii. Cure time; and
      iv. Wet track abrasion.

d. Interpretation of results and determination of a JMF including the following:

   i. Cement (minimum and maximum), percent;
   ii. Water, including aggregate moisture (minimum and maximum), percent;
   iii. Additive (if required), percent;
   iv. Emulsion in mix, percent;
   v. Residual asphalt content of emulsion; and
   vi. Residual asphalt content in mix, percent.

e. Mix designer's signature and date.

506.03. Construction.

A. **Equipment.** Provide equipment capable of producing a specification product.

1. **Slurry Seal Mixer.** Provide a continuous-flow slurry seal mixing machine with automated controls, capable of delivering predetermined proportions of aggregate, water, and asphalt emulsion to the mixing chamber, and capable of continuously discharging the mixed product. Do not mix violently. Equip and operate each mixing machine as follows:

   a. Easy to read metering devices that accurately measure the raw materials before they enter the pugmill.
   b. A system to pre-wet the aggregate in the pugmill immediately before mixing with the emulsion.
   c. A fines feeder with a metering device, or other approved means, to drop the required mineral filler quantity onto the aggregate before entering the mixing machine. Use the fines feeder if mineral filler is part of the aggregate blend.
   d. A water pressure system and a fog-type spray bar to fog the surface immediately ahead of the spreading equipment.
   e. Capable of a speed of at least 60 feet per minute. Operate at less than 180 feet per minute.
   f. Storage capacity to mix at least 7 tons of slurry seal.
   g. A method of measuring materials in each slurry seal batch. Obtain the Engineer's approval of the measurement method and make available for observation.
   h. Check the slurry seal mixer weekly to ensure the condition of the equipment meets requirements.

2. **Spreading Equipment.** Attach an adjustable, mechanical-type single squeegee distributor to the mixing machine. Equip the distributor with flexible material in contact with the road surface to prevent loss of slurry. Provide a steerable distributor, adjustable in width with a flexible strike-off capable of applying a uniform application of slurry on varying grades and crowns.

The spreader box must not leave grooves in the slurry. Keep the spreader box clean, and do not allow material build-up on the spreader.

Obtain the Engineer's approval of burlap, or other textile drag. Wet the drag with water at the beginning of each application. Clean or change the drag as directed by the Engineer.

3. **Calibration Requirements.** Before construction, calibrate each slurry seal mixer in accordance with the *Asphalt Institute Manual Series.* Submit documentation of the calibration of each material metering device at various settings. Supply materials and equipment, including scales and containers, for calibration. After calibrating each mixing machine, demonstrate the ability of the machine to mix components together to simulate an end product. Repeat mixer calibration for changes in aggregate or asphalt emulsion source.

4. **Miscellaneous Equipment.** Provide hand squeegees, shovels, and other equipment to perform the work. Provide cleaning equipment including power brooms, air compressors, water flushing equipment, and hand brooms for surface preparation.

5. **Lights on Equipment.** Equip power brooms, distributors, and truck-mounted spreaders and mixers with at least one Department-approved, flashing, rotating, or oscillating amber light, visible in every direction. Equip continuous mixer and spreader units with one light on each side of the machine.

B. **Pre-Production Meeting.** Before beginning work, conduct an on-site pre-paving meeting with the Engineer to discuss the following:

1. Contractor's detailed work schedule;
2. Traffic control plan;
3. Equipment calibration;
4. Mix design previously submitted to the Engineer;
5. Equipment inspection, including transport units;
6. Surface preparation and pre-treatment;and
8. Availability of materials.

C. **Surface Preparation.** Remove loose material, vegetation, dirt, mud, and other deleterious materials, and wash animal remains from the surface before placing the slurry seal. Before placing slurry seal, treat visible cracks with overband crack fill in accordance with section 502.

If a bond coat is required, use one part CSS-1h emulsified asphalt to three parts water and apply at a rate of 0.05 gallons per square yard. Allow the bond coat to cure before placing the slurry seal.

Apply water fog from 0.03 gallon per square yard to 0.06 gallon per square yard.

D. **Application.** Apply a single course of slurry seal over the area shown on the plans at a rate of at least 16 pounds per square yard, based on the weight of dry aggregate.

E. **Surface Quality.** Provide a finished surface, free of scratch marks, rippling, and other surface irregularities. Do not leave tear marks greater than ½ inch wide and 4 inches long, or other marks greater than 1 inch wide and 1 inch long.

F. **Cure Time and Repair.** Do not allow traffic on the new surface until it cures. Repair traffic damage to the new slurry seal surface at no additional cost to the Department.

G. **Weather and Seasonal Limitations.**

1. **Weather Limitations.** Place the slurry seal when pavement and ambient air temperatures are at least 45 °F and are rising. Do not place mix in rain or inclement weather, or if temperatures are forecast below 32 °F within 24 hours of application.

2. **Seasonal Limitations.** Place slurry seal in accordance with the following seasonal limitations:

   a. From June 1 to September 15, in the Upper Peninsula; or
   b. From May 1 to October 1, in the Lower Peninsula.

H. **Quality Control (QC).** If the Engineer identifies conditions that cause an unsatisfactory slurry seal, immediately stop production and begin corrective action, at no additional cost to the Department. Maintain QC measures until the Engineer accepts the work.

Produce a mix that meets the JMF and the QC tolerances specified in Table 506-1. Notify the Engineer immediately and stop mix production if the QC test results exceed the tolerance specified in Table 506-1. Identify the cause of the deviation and determine the corrective action necessary to bring the mix into compliance. Obtain the Engineer's approval before resuming work.

1. **Sampling and Testing.** Conduct QC sampling and testing at the following minimum frequency:

   a. Randomly sample fine aggregate from the mixer and test for gradation at a rate of one test per 500 ton of aggregate. Conduct at least one test per day of mix production.
   b. Randomly, at least three times per day, calculate the percent asphalt content of the mixture using the equipment counter readings.

Table 506-1 Slurry Seal Quality Control Tolerances	
Sieve Size	**Tolerance (±)**
No. 4	5.0%
No. 8	5.0%
No. 16	5.0%
No. 30	5.0%
No. 50	4.0%
No. 100	3.0%
No. 200	2.0%
General Quality Control Tolerances (±)	
Parameter	**Tolerance**
Asphalt Cement Content Single Test	0.5% from JMF
Asphalt Cement Content Daily Average	0.2% from JMF

2. **Documentation.** Within 1 working day of mix production and placement, provide a daily report to the Engineer with the following information:

   a. Control section;
   b. Project number;
   c. County;
   d. Route;
   e. Engineer;
   f. Date;
   g. Air temperature;
   h. Control settings;
   i. Calibration values;
   j. Unit weight of emulsion (pounds per gallon);
   k. Percent residue in emulsion;
   l. Beginning and ending stations;
   m. Counter readings (beginning, ending, and total difference);
   n. Aggregates placed;
   o. Gallons of emulsion placed;
   p. Percent of each material;
   q. Percent of asphalt cement;
   r. Application rate;
   s. JMF (percent portland cement, percent emulsion, gradation, percent AC);
   t. Contractor's authorized signature;
   u. Calibration forms;
   v. Aggregate gradations;
   w. Asphalt emulsion load ticket.

   If using truck mounted machines, prepare a separate daily report for each machine.

I. **Acceptance.**

1. **Field Inspection Acceptance.** Upon completion of work, schedule an inspection with the Engineer. The Engineer will note deficiencies, including areas exhibiting adhesion or cohesion failure, or other factors the Engineer determines unacceptable. Correct work identified by the Engineer as unacceptable.

2. **Delayed Acceptance.** At least 30 days after completion of the slurry seal, the Engineer will inspect the project for surface flushing and loss of material. If the Engineer finds these deficiencies, correct the work as approved by the Engineer within 7 working days of the inspection, or other date, as agreed by the Engineer, and at no additional cost to the Department.

506.04. Measurement and Payment.

Pay Item	**Pay Unit**
Seal, Slurry	Square Yard

The unit price for **Seal, Slurry** includes the cost of cleaning existing pavement surface, applying a bond coat, placing the mix, and traffic control, including traffic control to complete corrective action.

The Department will pay separately for overband crack fill pre-treatment, in accordance with subsection 502.04.

DIVISION 6 – PORTLAND CEMENT CONCRETE PAVEMENTS

Section	Title	Page No.
601	Reserved	XX
602	Concrete Pavement Construction	XX
603	Concrete Pavement Restoration	XX

NOTES

DRAFT – JULY 2020

Section 601. RESERVED

Section 602. CONCRETE PAVEMENT CONSTRUCTION

602.01. Description. This work consists of constructing a jointed portland cement concrete pavement, unbonded concrete overlay, base course, or shoulder, with or without reinforcement. This work also includes submitting a concrete quality control plan in accordance with section 1002 before beginning concrete production.

A. **Definitions.** The term "pavement", as used in these specifications, may include the following:

Concrete Pavement. Concrete placed for mainline pavement, multiple lane ramps, and collector-distributor roadways. Typical sections consist of standard widths and of lengths conducive to production paving.

Concrete Overlay. Concrete pavement placed on an existing pavement section. Typical sections consist of standard widths and of lengths conducive to production paving.

Miscellaneous Concrete Pavement and Miscellaneous Concrete Overlay. Concrete placed for single lane ramps, acceleration/deceleration lanes, approaches, intersections, and pavement gaps. Typical sections consist of variable widths and limited lengths not conducive to production paving.

Temporary Concrete Pavement. Concrete pavements constructed for temporary duration.

Concrete Pavement with Integral Curb. Pavement and curb constructed monolithically.

Concrete Base Course. Concrete pavement that will be surfaced with hot mix asphalt (HMA) or concrete overlay.

Concrete Shoulders. Concrete pavements placed as shoulders.

602.02. Materials. Provide materials in accordance with the following:

Curing Materials 903
Epoxy Coated Lane Ties 914
Steel Reinforcement 905
Bond Breaker Material 914
Joint Materials 914
Concrete, Grades 3000, 3500, 3500HP 1004

Provide Grade 3500 or Grade 3500HP for concrete pavement, miscellaneous concrete pavement, concrete overlay, and miscellaneous concrete overlay.

Provide Grade 3000, Grade 3500, or Grade 3500HP for concrete base course, concrete shoulders, and temporary concrete pavement.

The Engineer may approve Grade 3500HP for other applications.

Where concrete shoulders are cast monolithically with concrete pavement, provide the grade required for the concrete pavement.

Provide curing compounds in accordance with subsection 903.06 and the following:

A. Transparent curing compound for base course concrete;
B. White or transparent curing compound for temporary concrete pavement; and
C. White curing compound for other pavement, shoulders, and curb surfaces.

602.03. Construction.

A. **Equipment.** Provide and maintain equipment necessary to complete the work.

1. **Fixed Forms and Back-Up Rails.** If paving with fixed forms, use back-up rails attached to the forms to raise equipment wheel flanges clear of previously cast pavement.

   Use metal forms with section rigidity to support the paving.

   Use flexible or standard steel forms with flexible liners where the radius of the curve is less than 150 feet, except where temporary concrete pavement is required.

2. **Compactor.** Use mechanical compactors for constructing aggregate base under the concrete pavement.

3. **Concrete Spreader.** Use a Department-approved device to spread and strike off each layer of concrete and to finish the top layer of concrete. Use a spreader with a weight and rigidity to strike off the concrete to the required grade and profile.

4. **Dowel Bar Inserter (DBI).** The Engineer may allow the use of a DBI instead of load transfer assemblies. Use a Department-approved mechanical DBI that automatically installs load transfer bars at the required depth and consolidates the surrounding concrete.

5. **Lane-Tie Installer.** Use a Department-approved manual or mechanical method for installing lane-ties.

6. **Reinforcement Bridge.** For reinforcement not placed on chairs or mechanically lifted off the grade, transfer the reinforcement from the hauling equipment to a movable bridge that spans the newly cast pavement. Use a bridge that can carry the reinforcement load without deflecting the form or rutting the track line.

7. **Internal Vibrator.** Use mechanical internal vibrators, set in accordance with the manufacturer's specifications, which provide concrete consolidation for a radius of 1 foot around the vibrator head.

   Use a device to monitor the rate of vibration for each concrete vibrator. Verify that all vibrators are operating properly each day, prior to paving; and periodically during daily paving operations. Replace any defective vibrators immediately. Connect the vibrators to start automatically with the forward movement of the equipment and stop automatically when the forward movement stops. Space and operate vibrators as recommended by the manufacturer.

8. **Floating and Finishing Equipment.** Shape, screed, and float the concrete to form a dense, homogeneous pavement, requiring only minimum hand finishing.

   Use hand floats and straightedges at least 10 feet long that are rigid and free of warping. Use handles with a length that will allow finishing half the width of the newly placed pavement. Use box or channel hand floats with a floating face at least 6 inches wide.

   The Engineer may approve the use of a roller screed or other manual or semi-automated finishing equipment for one lane-width, miscellaneous, and bridge approach concrete pavements if the Contractor demonstrates methods and equipment meet the requirements of subsection 602.03.A.3

9. **Straightedges for Testing Surface Smoothness.** Provide two 5-foot straightedges and one 10-foot straightedge, rigid and free from warping, for the Engineer's use.

10. **Stencils.** Use a template device for imprinting the pavement. Provide numerals that are 3 inches to 4 inches high and at least ¼ inch deep.

11. **Foot Bridges.** Use at least one moveable bridge for finishing the pavement, installing monument boxes, performing wet checks, and crossing the pavement. Foot bridges spanning slab widths of at least 16 feet must be equipped with wheels, unless they are an integral part of the paving equipment. Design and construct foot bridges to prevent contact with the concrete.

12. **Membrane Sprayer.** Use mechanical equipment to apply curing compound to exposed pavement surfaces. Use fully atomizing, self-contained spray equipment that is self-supported on wheels or tracks located outside the newly placed pavement. Continuously mix the compound during application. Apply a continuous uniform film of curing compound to exposed concrete surfaces.

    The Engineer may approve hand spraying equipment for small and irregular shapes of new concrete pavement. The sprayer must be capable of applying a uniform film of atomized curing compound at the required rate.

Inspect curing compound application equipment before starting daily production to verify its ability to apply the curing compound.

13. **Concrete Saws.** Use a concrete saw for the required application and as recommended by the manufacturer.

14. **Joint Sealing Equipment.** For hot-poured rubber-asphalt type joint sealing compound, use an indirect or double-boiler heating kettle that uses oil as the heat transfer medium. Use a thermostatically controlled heat source, built-in automatic agitator, and thermometers to show the temperature of the melted sealing material and the oil bath. The Engineer may require a demonstration that the equipment will consistently produce a joint sealant of required pouring consistency.

    Equip the kettle with a pressure pump, hose, and nozzle that can place the joint sealant to the full depth of the joint and completely fill the joint. Do not use direct flame heat on the nozzle.

B. **Base Preparation.** Construct and maintain the base to the required line, grade, and cross section, in accordance with subsection 302.03 before pavement placement. Prepare the base and allow the Engineer to test and accept the base before setting forms or slip form paving.

Verify that the paving equipment will maintain the grade tolerance specified for the pavement. If the prepared base is damaged by construction equipment, reconstruct the grade and cross section in accordance with subsection 302.03.C, or as directed by the Engineer, before placing the concrete, at no additional cost to the Department.

C. **Placing Forms.** Trim the compacted base close to the staked grade using base preparation equipment. Check the base for line and grade, and correct irregularities before placing the forms. Compact the base outside the area to be paved, to support the forms.

Clean forms of hardened concrete or mortar that would alter the shape or finish elevation of the anticipated concrete placement. Set forms, providing uniform bearing of the forms directly on the base throughout their length and width. Securely join, lock, stake and brace each form segment. Do not allow vertical movement to exceed ⅛ inch, and horizontal movement to exceed ¼ inch during concrete placement.

After the forms are set, provide time for the Engineer to check them. If requested by the Engineer, fabricate string lines for checking line and grade. Adjust form lines that vary from the staked line by more than ½ inch, or from the staked grade by more than ⅛ inch.

Treat the inside of all forms with a release agent that will not discolor or adversely affect the concrete. Do not allow the release agent to come in contact with steel reinforcement, lane ties, or existing concrete surfaces.

D. **Placing Concrete.** Set structure castings to grade and alignment before, or during, concrete placement. The boxing-out method for concrete base course and temporary concrete pavement will be allowed. Clean structure castings to allow adhesion of the concrete.

Place concrete on a moist base. Do not place concrete on a frozen base, or an unstable base.

Keep the top of the forms clean and free of concrete during placing and finishing.

Inspect vertical surfaces of previously placed concrete and the adjacent grade, and remove material that would prevent the adjoining concrete pour from consolidating or conforming to the plan dimensions.

If an open-graded base is used, inspect the graded base for contamination from fines or debris, prior to paving. If the Engineer determines that contaminated material requires removal or replacement, remove and replace at no additional cost to the Department.

When the Engineer determines that damage occurs to the base course from hauling units, discontinue production until the cause of the damage has been evaluated and corrected.

Spread and strike off the concrete as soon as it is deposited on the base and avoid segregation. Consolidate the concrete with internal vibrators. Provide additional vibration as needed to properly consolidate concrete adjacent to the faces of fixed forms and next to transverse dowel bar assemblies. Do not use vibrators for flowing or spreading concrete.

When using the slip form method, vibrate concrete for the full width and depth of the pavement. Where placing the concrete in two layers, the consolidation may occur after placing the top layer.

Continually monitor the operation of vibrators mounted on the paving machine. Do not commence paving until it is demonstrated to the satisfaction of the Engineer that vibrators are operating in accordance with the manufacturer's specifications. If a vibrator malfunctions during paving, discontinue paving operations and correct the malfunction. Resume paving when malfunctions are corrected, and the Engineer approves.

Cease vibration and tamping when the paving equipment stops.

Provide a continuous paving operation. The Engineer may stop production if there is not sufficient equipment or labor to keep pace with the other paving operations. When placing the concrete in two layers, place the top layer of concrete within 30 minutes of placing the bottom layer. Place a transverse end-of-pour joint (Symbol H) when unavoidable interruptions of concrete placement occur that are longer than 60 minutes from the time the concrete is batched until final finishing of the concrete surface.

Operate equipment to prevent damage to pavements and bridge decks and to maintain the required grade in transitioning from the pavement to the deck.

Do not allow vehicles or equipment, other than joint saws or ride quality measurement equipment, on new pavement, or portions of new pavement, until the concrete reaches a strength in accordance with subsection 104.11.

Keep existing pavements clean of materials that may interfere with finishing operations or cause damage to the concrete surface.

Where placing slip form pavement in two layers, each side of the first layer may be cast narrower than the width of the proposed pavement slab by 3 inches and at least twice the largest dimension of the concrete aggregate but not more than 6 inches. Cast full depth pavement at the edges with the second layer.

Unless otherwise specified, finish concrete placed each day during daylight, or provide artificial light at no additional cost to the Department, as approved by the Engineer.

E. **Placing Reinforcement.** Place reinforcement that is free of loose rust and other contaminants.

1. **Welded Wire Fabric.** Place steel welded wire fabric for concrete pavements from a reinforcement bridge, or by other methods that will not contaminate the concrete as approved by Engineer.

2. **Bar Reinforcement.** Place steel bar reinforcement for concrete bridge approach pavements in accordance with subsection 706.03, Standard Plan R-45 series, and as shown on the plans.

F. **Constructing Joints.** Install epoxy coated lane ties or deformed bars in accordance with Standard Plan R-41 series.

1. **Longitudinal Lane Tie Joints with Straight Tie Bars (Symbol D and Symbol S).** Place longitudinal lane tie joints with straight tie bars (Symbol D and S) in accordance with Standard Plan R-41 series. Use Department approved chairs or mechanical devices to support bars. Do not place lane tie bars in the concrete by hand methods.

   Unless otherwise required in the contract, installation of lane tie bars is not required for temporary concrete pavement.

2. **Longitudinal Bulkhead Joints (Symbol B).** Place longitudinal bulkhead joints (Symbol B) in accordance with Standard Plan R-41 series. Protect the free edge longitudinal joint until adjacent pavement is placed. Install the bent bars to allow consolidation around the bars without causing concrete slumping at the edges. Straighten bent tie bars after the concrete has gained required strength. Straighten tie bars to run parallel to the surface of the pavement and perpendicular to the edge of the pavement. Inspect the bars to determine if the epoxy coating is damaged after straightening the bars. Repair tears or loosening of the epoxy

coating within 6 inches of the joint face using the coating material recommended by the coating manufacturer.

3. **Pull-out Resistance Testing for Adhesive Anchored Lane Tie Bars.** Pull-out resistance testing is required for lane tie bars that are adhesive anchored into the hardened concrete. Pull-out resistance testing is not required for lane tie bars that are cast into the fresh concrete.

   Lane tie bar pull-out resistance must meet the requirements shown in Table 602-1. If the test results for the lane tie bars from the first day of placement meet the requirements of Table 602-1, the Engineer will determine the need for additional testing.

   If the average pull-out resistance is less than the minimum requirements in Table 602-1, provide a plan to the Engineer for approval. The plan should detail how additional epoxy-anchored lane tie bars will be added to provide proper load transfer. Install anchored lane tie bars in accordance with the approved plan at no additional cost to the Department. Do not place adjacent pavement until the Engineer tests the additional lane tie bars.

   The Engineer may waive verification tests for projects with less than 1,000 feet of longitudinal bulkhead joints.

Table 602-1
Lane Tie Pull-Out Resistance

Distance From Joint Being Constructed to Nearest Free Edge of Completed Pavement (a)	**Average Pull-out Resistance Per Foot of Joint (lb minimum)** (b, c)
12 ft or less	2,200
over 12 ft through 17 ft	3,200
over 17 ft through 24 ft	4,500
over 24 ft through 28 ft	5,200
over 28 ft through 36 ft	6,800
36 ft or greater	—(d)

a. Includes combinations of tied lane widths, valley gutter, curb and gutter, or concrete shoulder.
b. Slippage must not exceed 1/16 in.
c. Refer to the *Materials Quality Assurance Procedures Manual* for inspection procedure.
d. As directed by the Engineer

4. **Transverse Joints.** Construct transverse contraction, expansion, and plane-of-weakness joints in pavements as shown on the *Standard Plans*.

   Unless otherwise shown on the plans, construct transverse joints perpendicular to the pavement centerline.

   Where placing pavement in partial-width slabs, place transverse joints in line with like joints in the adjacent slab. Where widening existing pavements, place transverse joints in line with

like joints in the existing pavement and in line with "working" cracks that function as joints, or as directed by the Engineer.

Provide load transfer assemblies manufactured in accordance with the *Standard Plans*. The Engineer will reject damaged, deformed, or nonconforming load transfer assemblies. Stake the load transfer assemblies in place. Do not cut the shipping tie wires. Allow time for the Engineer to check the assemblies for condition, line, and grade before placing concrete. Permanently mark dowel bar locations on the vertical face of the plastic concrete pavement to accurately identify and locate joints for subsequent sawing.

For expansion joints, equip the free end of the bar with a close-fitting cap in conformance with the *Standard Plans*.

Where using more than one section of premolded joint filler in a joint, tightly butt the sections together. Place the bottom edge of the premolded filler in contact with the base and the top edge at the required depth below the surface of the pavement. Place the expansion joint filler perpendicular to the surface and the centerline of the pavement.

Construct end of pour joints in accordance with the *Standard Plans*.

If using a Dowel Bar Inserter (DBI) to install load transfer bars, space the bars in accordance with Standard Plan R-40 series. Place and consolidate the pavement full-depth before inserting the dowel bars. Permanently mark dowel bar locations on the vertical face of the plastic concrete pavement for accurate identification and location of joints for subsequent sawing.

Insert dowel bars into the full-depth plastic concrete, and consolidate the concrete around the dowel bars, leaving no voids. Do not use hand-held vibrators. Align dowel bars in the vertical and horizontal planes to within ½ inch for the entire length of the bar. Center dowels bars longitudinally within 2 inches of the location of the transverse joint shown on the plans.

Verify the inserted dowels meet the required tolerances. The Engineer will witness these measurements. Provide documentation, if requested by the Engineer. Perform daily wet checks of the dowel bars at a minimum frequency of one wet check every 500 feet and as required by the concrete quality control plan. Mark and replace joints that are out of tolerance at no additional cost to the Department.

Locate the night header at a transverse joint location. Place a test joint beyond the night header to remove for testing. Saw the test joint full-depth, to expose the ends of the dowels, 14 inches wide over the center of the joint (7 inches each side of the center of the joint), and remove the test header for inspection of the dowel bar placement before restarting the concrete pavement operation. The minimum width of area to be removed must equal the width of the slab being placed on the Project. Install dowels in the night header in drilled and adhesive anchored, or preformed holes after removal of the test joint. If the Contractor uses

a continuous paving operation that does not stop, the Engineer will establish the test joint location. Unless otherwise directed by the Engineer, a minimum of three acceptable test joints are required per direction of paving for the project.

Saw transverse contraction and expansion joints in accordance with subsection 602.03.N.

5. **Intersection Joint Layout.** Develop a plan showing the intended layout of the joints, including clear labeling of proposed joint types. The intersection joint layout plan must be submitted to the Engineer for review a minimum of 7 days prior to concrete placement. Any comments or proposed changes to the plan will be returned for revision to produce an approved joint layout plan prior to concrete placement.

   Construct intersection joints in pavements as shown on the approved intersection joint layout plan.

   Saw intersection joints in accordance with subsection 602.03.N.

G. **Screeding.** Screed and consolidate concrete pavement to achieve the final cross section shown on the plans. Use machine methods that avoid material segregation.

The Engineer may allow the use of manual methods for concrete pavement gaps less than 160 feet long and no greater than one lane width wide, or if the pavement is entirely concrete base course.

Do not use water to enhance finishing operations.

H. **Finishing Surface.** Screed or extrude the finished surface to a smooth, sealed, and uniform appearance in accordance with the final cross section shown on the plans.

I. **Straightedge Testing, Surface Correction, and Edging.** While the concrete is still plastic, test the slab surface and structure castings for compliance with the required grade and cross section using a 10-foot straightedge, or other method if approved by the Engineer.

If high or low spots exceed ⅛ inch over 10 feet, suspend paving operations and correct the finishing procedures. Correct high or low spots in pavements that exceed the tolerance and obtain the Engineer's approval before resuming paving operation.

The Engineer will evaluate high or low spots in the hardened concrete slab surface, including structure castings, that exceed ½ inch over 10 feet, or ¾ inch over 50 feet, in accordance with subsection 104.04.

In locations where the hardened concrete slab interfaces with either a newly constructed pavement, sleeper slab, approach slab, or expansion joint, the Engineer will evaluate high or low

spots on either surface, including the interface between the two surfaces, that exceed ½ inch over 10 feet in accordance with subsection 104.04.

Correct high or low spots in pavements that exceed these tolerances at no additional cost to the Department.

Correct edge settlement that exceeds ⅜ inch before the concrete hardens. Suspend paving if edge settlement exceeding ¼ inch continues for at least 10 feet, and make corrections before resuming paving.

Do not leave overhanging projections on pavement edges, except on temporary concrete pavement.

J. **Ride Quality.** Provide ride quality as required by the contract.

K. **Texturing.** When the pavement sets and will maintain a texture, drag the surface longitudinally using one or two layers of damp burlap. Maintain contact between the burlap and the concrete surface across the entire width of newly placed concrete.

Immediately after dragging, groove pavement surfaces other than concrete base courses and shoulders. Unless otherwise shown on the plans, use a steering controlled machine to orient the grooves parallel to the longitudinal joint. Prevent noticeable wander, overlap, or wave pattern in the grooves. Do not allow the groove edges to slump at the edges or severely tear the concrete surface. Place grooves with a width and depth of ⅛ inch, with a tolerance of $\frac{1}{32}$ inch, spaced ¾ inch on center with a tolerance of $\frac{1}{16}$ inch. Do not groove the pavement surface within 1½ inches of longitudinal joints. Provide a mean texture depth from 0.04 inch to 0.10 inch, in accordance with ASTM E965.

For areas requiring turf-drag texturing, produce the texture and required mean texture depth by longitudinally dragging an artificial turf material to produce a uniform pattern parallel to the centerline. Maintain continual and uniform contact with the plastic concrete over the entire area being textured. Periodically clean turf material to maintain a uniform texture. Provide a mean texture depth at least 0.03 inch, in accordance with ASTM E965.

For miscellaneous pavement, the use of a manual texturing device with a texture rake at least the same width as the plastic concrete pavement will be allowed.

When transverse grooving is required, orient the grooves perpendicular to the centerline and form the grooves in the plastic concrete. Do not allow the grooves to slump at the edges or severely tear the concrete surface. Place grooves with a width and depth of ⅛ inch, with a tolerance of $\frac{1}{32}$ inch, spaced ¾ inch on center with a tolerance of $\frac{1}{16}$ inch.

Texture the plastic concrete before applying curing compound. If the Engineer determines that the texturing operations are delaying the application of the curing compound, stop the texturing operation, and complete the application of curing compound.

If texturing is not complete before placing curing compound or if the pavement is not textured as required, complete the surface texturing of the hardened concrete, at no additional cost to the Department, after the pavement achieves the minimum required class design strength. Correct pavement surfaces by grooving the hardened concrete longitudinally with a width and depth of ⅛ inch and a tolerance of $\frac{1}{32}$ inch, spaced ¾ inch on center with a tolerance of $\frac{1}{16}$ inch on center. Submit a corrective action plan, including collection and disposal of the residue from retexturing, for the Engineer's approval.

L. **Stenciling Pavement.** After texturing, stencil survey station numbers into the pavement surface. Stencil station numbers 16 inches from the edge of the pavement. Place numbers perpendicular to the centerline of the roadway, legible from a vehicle traveling in the direction of traffic. On two-way roads, stencil station numbers to read in the direction of stationing.

Stencil the month, day, and year into the concrete pavement at the beginning and end of each day's pavement operation, near the edge of the slab opposite the edge used for stationing. Place the date so it can be read if facing in the direction of pavement placement.

Do not stencil concrete base courses and temporary pavements.

Mark underdrain outlets in concrete shoulders, in accordance with subsection 404.03.F. Stencil the marker into the concrete surface, after texturing.

M. **Curing.** Curing operations will take precedence over texturing in accordance with subsection 602.03.K.

Cure the concrete as soon as the free water leaves the surface of the pavement. Coat and seal the pavement surface and sides of slip formed pavement with a uniform layer of membrane curing compound.

Apply one coat of curing compound on non-grooved surfaces and two coats on grooved surfaces. Apply at least 1 gallon per 25 square yards of surface for each coat. Apply the second coat after the first coat dries, but do not allow more than 2 hours between coats.

Maintain a thoroughly mixed compound in accordance with the manufacturer’s recommendation. Do not thin curing compound.

For miscellaneous concrete pavement more than one lane wide, apply the compound from a foot bridge, if using a manually operated pressure-type sprayer.

Immediately reapply curing compound to surfaces damaged by rain, joint sawing, Contractor foot traffic, or other activities.

If fixed-forms are removed within the 7 day curing period, coat the sides of the pavement with curing compound immediately after removing the forms.

If using cold-weather protection during the curing period, curing compound may be omitted if approved by the Engineer. Apply curing compound immediately after removing cold-weather protection.

Repair or replace concrete showing injury or damage due to inadequate curing, at no additional cost to the Department.

N. **Sawing Joints.** Saw joints as shown on the *Standard Plans*. The use of a concrete saw on new pavement to saw the joints is allowed. The water supply truck is not allowed on new pavement until the pavement has attained the strength specified in subsection 104.11.

Immediately stop sawing operations if sawing causes raveling, spalling, or damage to the concrete surface. Continue to monitor the concrete hardness before resuming sawing operation.

1. **Longitudinal Joints.** Saw longitudinal joints (Symbol D). Start sawing operation after the concrete pavement hardens but before random cracks develop in the concrete pavement.

2. **Transverse Contraction and Expansion Joints.** Construct the joint groove in expansion joints as shown on the *Standard Plans*. Flush loose concrete and slurry from the groove and the immediate area.

   If the required seal is not installed within 7 days of final sawing, temporarily seal the joint groove with a Department-approved material or device to prevent the infiltration of foreign material.

   Install either the permanent seal or a temporary seal before allowing vehicles to travel over the full width joint grooves.

   Saw joints in two stages, in accordance with the following:

   a. Place a relief cut directly over the center of the load transfer assembly or over the preformed joint filler. Make the relief cut after the concrete hardens and will not excessively ravel or spall, but before random cracks develop in the concrete pavement. Immediately stop sawing if sawing operation causes excessive raveling or spalling, and continue to monitor the concrete hardness before resuming sawing operations. Do not allow traffic over the expansion joint relief cuts.
   b. Center the joint groove over the relief cut. Immediately stop sawing if sawing operation causes excessive raveling or spalling, and continue to monitor the concrete hardness

before resuming sawing operations. Maintain the curing of the concrete near the joint, and if required, install the permanent joint sealant or place temporary cover material. Give second stage sawing of expansion joints priority over second stage contraction joint sawing, if higher pavement temperatures are forecast.

If proposing an alternative method for sawing, submit a plan to the Engineer for approval. Alternate methods will not be allowed if they cause spalling, raveling, and random cracks in the concrete pavement.

Repair raveling or spalling in accordance with subsection 602.03.P. Remove and replace random cracked panels as directed by the Engineer, at no cost to the Department.

The *Standard Plans* will specify the location of the transverse joint in the pavement, shoulder, curb and gutter, valley gutter, or base course; if the joint requires a load transfer assembly, expansion joint filler, or both; and the type of sealant or seal required.

O. **Pavement Thickness.** The Department will determine payment in accordance with subsection 602.04. Coring for quality control purposes will not be allowed unless approved by the Engineer.

P. **Patching Joints.** After sawing and cleaning the joints, inspect for spalls and voids. Remove loose, unsound, or damaged concrete as directed by the Engineer. Repair joints in concrete base course and temporary concrete pavement for intermediate and major spalls. Perform all spall repairs at no additional cost to the Department.

1. **Minor Spalls.** Minor spalls or voids are defined as those that do not exceed 1 inch beyond the vertical joint face shown in the *Standard Plans*.

   Saw cut spalls parallel to the joint groove at the outer extremity of the spalled area. Sandblast the spalled concrete surface. Blow the patch clean with a jet of oil-free compressed air.

   Clean concrete surfaces according to subsection 602.03.R.

   Seal minor spalls according to subsection 602.03.S.

2. **Intermediate Spalls.** Intermediate spalls are defined as those that do not exceed 4 inches in width by 2 feet in length along the direction of the joint, nor greater than 4 inches deep. No more than 3 non-continuous linear feet of intermediate spall is permitted per transverse joint, or per panel for longitudinal joint, or as determined by the Engineer.

   Saw cut spalls parallel to the joint groove at the outer extremity of the spalled area. Cut at least 2 inch deep. Chip the concrete out to the saw cut to form a vertical face at the back of the repair area. Cut the two ends of the repair area to form vertical faces. Sandblast the

entire area to remove loose particles. Blow repair area clean with a jet of oil-free compressed air to remove the sand and other loose material.

Select a material for intermediate spall repair according to subsection 914.05.

3. **Major Spalls.** Major spalls are those exceeding the dimensional thresholds described for intermediate spalls. Repair major spalls according to Standard Plan R-44 series.

Q. **Repair of Longitudinal Joints and Edges.** Patch spalls that occur between adjacent lanes of concrete pavement and at edges in accordance with subsection 602.03.P.

Where a concrete pavement abuts an HMA surface, patch spalls that extend more than 1 inch from the vertical joint face and more than 1 inch below the surface of the pavement. If the cumulative total of spall lengths exceeds 20 feet per mile of pavement joint, patch spalls less than 1 inch from the vertical joint face and more than 1 inch below the surface of the pavement.

The Engineer will direct the repair of spalls greater than 36 square inches within 10 feet of longitudinal joint or edge. Remove and replace the pavement if directed by the Engineer, and at no additional cost to the Department.

R. **Cleaning Joints.** Clean joints, including the surface of the pavement next to the joint groove, with appropriate tools and equipment to remove slurry, stones, or other loose material. Ensure the vertical faces of the prepared joint meet the concrete surface profile 2 (CSP 2) as defined by the International Concrete Pavement Repair Institute. Joints must be clean and dry with no sign of debris, residue, and surface moisture prior to installing joint sealant material.

S. **Sealing Joints.** Seal longitudinal and transverse joints as shown on the plans.

Do not use artificial heat to dry joints before sealing.

Seal the joints immediately after cleaning. Verify that the joint surfaces are dry before sealing. Place sealant when the concrete temperature is at least 40 °F and rising without the use of artificial heat.

Melt sealant in a heating kettle; do not heat directly. Do not use sealants that are heated to more than the safe heating temperature recommended by the manufacturer.

Apply hot-poured joint sealant using a pressure applicator with a nozzle that extends into the groove. Remove sealant from the surface of the pavement. Before allowing traffic over the sealed joint, cure the sealant to resist pickup.

T. **Weather and Temperature Limitations.**

1. **Protection Against Rain.** Protect the concrete pavement from damage by rain.

2. **Protection from Cold Weather.** Protect the concrete pavement from freezing until it attains a compressive strength of at least 1,000 psi. Remove and replace concrete slabs damaged by cold weather, as directed by the Engineer, and at no additional cost to the Department.

3. **Cold Weather Limitations.** Do not place concrete pavement until the ambient air temperature away from artificial heat is at least 25 °F and rising, unless otherwise approved by the Engineer. Do not place concrete pavement if portions of the base, subbase, or subgrade layer are frozen, or if the grade exhibits poor stability from excessive moisture. Protect the concrete surfaces using insulating blankets or polystyrene insulation with a minimum R Value of 7.0 if the National Weather Service forecasts air temperatures below 40 °F for more than 8 consecutive hours during the curing period. Plastic sheeting may be used in lieu of insulating blankets or polystyrene insulation if the National Weather Service forecasts air temperatures above 32 °F during the curing period.

4. **Hot Weather Limitations.** Protect concrete pavement during hot weather as required by the concrete quality control plan. Protect the concrete pavement if the rate of evaporation is equal to or greater than 0.20 psf per hour, in accordance with Figure 706-1.

   Use equipment, approved by the Engineer, for determining the relative humidity and wind velocity at the concrete pavement site.

5. **Concrete Temperature Limitations.** At the time of concrete placement, ensure a concrete temperature from 45 °F to 90 °F.

602.04. Measurement and Payment.

Pay Item	Pay Unit
Conc Pavt, Reinf, __ inch	Square Yard
Conc Pavt, Bridge Approach, Reinf	Square Yard
Conc Pavt, Bridge Approach, Reinf, High Performance	Square Yard
Conc Pavt, Nonreinf, __ inch	Square Yard
Conc Pavt, Nonreinf, __ inch, High Performance	Square Yard
Conc Pavt with Integral Curb, Reinf, __ inch	Square Yard
Conc Pavt with Integral Curb, Nonreinf, __ inch	Square Yard
Conc Pavt, Misc, Reinf, __ inch	Square Yard
Conc Pavt, Misc, Nonreinf, __ inch	Square Yard
Conc Pavt, Misc, Nonreinf, __ inch, High Performance	Square Yard
Conc Pavt, Reinf, __ inch, Temp	Square Yard
Conc Pavt, Nonreinf, __ inch, Temp	Square Yard
Conc Base Cse, Reinf, __ inch	Square Yard
Conc Base Cse, Nonreinf, __ inch	Square Yard
Shoulder, Reinf Conc	Square Yard
Shoulder, Nonreinf Conc	Square Yard

Shoulder, Nonreinf Conc, High Performance ..... Square Yard
Shoulder, Freeway ..... Square Yard
Conc Pavt, Ovly, Furnishing and Placing ..... Cubic Yard
Conc Pavt, Ovly, Furnishing and Placing, High Performance ..... Cubic Yard
Conc Pavt, Ovly, Finishing and Curing ..... Square Yard
Conc Pavt, Ovly, Finishing and Curing, High Performance ..... Square Yard
Conc Pavt, Ovly, Misc, Furnishing and Placing ..... Cubic Yard
Conc Pavt, Ovly, Misc, Furnishing and Placing, High Performance ..... Cubic Yard
Conc Pavt, Ovly, Misc, Finishing and Curing ..... Square Yard
Conc Pavt, Ovly, Misc, Finishing and Curing, High Performance ..... Square Yard
Pavt Gapping ..... Foot
Joint, Contraction, (type) ..... Foot
Joint, Contraction, (type), Intersection ..... Foot
Joint, Expansion, (type) ..... Foot
Joint, Expansion, (type), Intersection ..... Foot
Joint, Plane-of-Weakness, (type) ..... Foot
Joint, Plane-of-Weakness, (type), Intersection ..... Foot
Conc, Grade __ ..... Cubic Yard

A. **Concrete Pavement and Base Course.** The Engineer will measure, and the Department will pay for concrete pavement and base course by area, based on plan quantities in accordance with subsection 109.01. The Department will establish pay items based on the type of pavement installed, the pavement thickness required, and whether reinforcement is required.

The Engineer will measure concrete pavement with integral curb by area, including the curbs.

The Engineer will measure transition areas between concrete valley gutter and concrete curb and gutter, and concrete valley gutter cast integrally with concrete pavement at the apex of gore areas, by dividing the area in half and measuring each half using the units of adjacent pay items.

The unit prices for other pavement and base course pay items include the cost of concrete headers abutting bridges and track crossings constructed by thickening the pavement.

The unit prices for **Conc Pavt, Misc, Reinf**; **Conc Pavt, Misc, Nonreinf**; **Conc Pavt, Misc, Nonreinf, High Performance**, **Conc Pavt, Bridge Approach, Reinf**; and **Conc Pavt, Bridge Approach, Reinf, High Performance** of the thicknesses required, include the cost of additional concrete additives if concrete pavement for pavement gapping requires additives to meet minimum opening-to-traffic strength requirements.

B. **Concrete Shoulder.**

1. **Shoulder, Reinf Conc; Shoulder, Nonreinf Conc; and Shoulder, Nonreinf Conc, High Performance.** The Engineer will measure, and the Department will pay for **Shoulder, Reinf**

Conc; **Shoulder, Nonreinf Conc**; and **Shoulder, Nonreinf Conc, High Performance** by area, based on plan quantities in accordance with subsection 109.01.

2. **Shoulder, Freeway.** The Engineer will measure and the Department will pay for **Shoulder, Freeway** based on plan quantities in accordance with subsection 109.01. If the Contractor uses concrete for the shoulder, the unit price for **Shoulder, Freeway** includes the cost of the transverse joints in the shoulder and the external longitudinal pavement joints.

C. **Concrete Overlay.**

1. **Concrete Pavement, Overlay Furnishing and Placing.** The Engineer will measure, and the Department will pay for **Conc Pavt, Ovly, Furnishing and Placing**; and **Conc Pavt, Ovly, Furnishing and Placing, High Performance** on concrete pavements and shoulders, including providing and placing the concrete mixture, by volume. The Engineer will determine the volume based on in-place quantities.

2. **Concrete Pavement, Overlay Finishing and Curing**. The Engineer will measure **Conc Pavt, Ovly, Finishing and Curing**; and **Conc Pavt, Ovly, Finishing and Curing, High Performance** in place. The unit price for **Conc Pavt, Ovly, Finishing and Curing**; and **Conc Pavt, Ovly, Finishing and Curing, High Performance** includes the cost of finishing and curing concrete pavements and shoulders, finishing and curing the concrete overlays, and constructing longitudinal joints.

   The Engineer will measure and the Department will pay for constructing transverse joints, in accordance with subsection 602.04.E, and for repairing and removing the existing pavement, in accordance with subsection 603.04.B.

3. **Concrete Pavement, Overlay, Miscellaneous Furnishing and Placing and Concrete Pavement, Overlay, Miscellaneous Finishing and Curing.** The unit prices for **Conc Pavt, Ovly, Misc, Furnishing and Placing**; **Conc Pavt, Ovly, Misc, Furnishing and Placing, High Performance**; **Conc Pavt, Ovly, Misc, Finishing and Curing**; and **Conc Pavt, Ovly, Misc, Finishing and Curing, High Performance** include the cost of reconstructing ramps, ramp overlays, gore areas, and approach areas. The Engineer will measure, and the Department will pay for **Conc Pavt, Ovly, Misc, Furnishing and Placing**; and **Conc Pavt, Ovly, Misc, Furnishing and Placing, High Performance** in accordance with subsection 602.04.C.1. The Engineer will measure, and the Department will pay for **Conc Pavt, Ovly, Misc, Finishing and Curing**; and **Conc Pavt, Ovly, Misc, Finishing and Curing, High Performance** in accordance with subsection 602.04.C.2.

   Substituting higher grades of concrete for lesser grades of concrete will be allowed at no additional cost to the Department.

D. **Pavement Gapping**. The Engineer will measure **Pavt Gapping** by the length parallel to the centerline of the project from the beginning of concrete to the end of concrete, within the gapped

section. The Engineer will measure each individual lane of gapped concrete pavement separately. The unit price for **Pavt Gapping** includes the cost of interrupting paving operations, moving back to pave the gap, and maintaining cross traffic.

The unit prices for other pay items include the cost of gapping curbs, curb and gutter, gutters, driveways, and sidewalks.

E. **Joints.** The unit prices for other pay items include the cost of transverse end-of-pour joints (Symbol H) and transverse plane-of-weakness joints (Symbol U). The Department will pay for other transverse joints by the length, based on plan dimensions, for the type of joint required.

The unit price for the transverse contraction, transverse expansion, transverse plane-of-weakness, and intersection joints include the cost of the following:

1. Providing required joint materials such as load transfer assemblies, expansion joint fillers, and joint seals or sealants;
2. Providing a joint layout detail plan, if required;
3. Sawing, forming, and cleaning the joints;
4. Providing and applying bond breaker if required; and
5. Providing and placing poured joint sealant.

The Engineer will measure and the Department will pay for expansion or contraction joints for concrete shoulders, shown on the plans, based on plan dimensions.

The unit prices for other pay items include the cost of internal and external longitudinal joints.

F. **Price Adjustment for Pavement, Shoulder, and Base Course Based on Thickness and Depth of Reinforcement.** The Engineer will core the concrete pavement before final acceptance to determine the thickness of the concrete pavement, and if required, the depth of reinforcement below the pavement surface. The Engineer will only measure the top layer of steel for depth of concrete cover for concrete pavements with two layers of required reinforcement.

The Engineer will not core the following:

1. Temporary concrete pavement;
2. Pavement within 4 feet of an obstruction;
3. Pavement areas less than 300 square yards; or
4. Pavement less than 3 feet wide.

The Engineer will determine concrete pavement units, core locations, and evaluate cores in accordance with MTM 201.

The Department will adjust the contract unit price for areas of concrete pavement where thicknesses or reinforcement locations exceed required tolerances. The Engineer will use Table

602-2 to classify cores and determine price adjustments according to concrete pavement thickness. The Engineer will use either Table 602-3A, or Table 602-3B to classify cores and determine price adjustments according to steel depth. The Department will apply these adjustments cumulatively to the evaluated pavement unit.

1. **Initial Core.** The Engineer will classify each initial core with a one or two letter core-type code. The first letter (A, B or C) represents the thickness classification in accordance with Table 602-2 and the second letter (X, Y or Z), represents the steel depth classification in accordance with Table 602-3A.

   If the Engineer classifies an initial core from a concrete pavement unit as Type AX, indicating both thickness and steel depth are within required tolerances, the Department will not apply an adjustment and the Engineer will take no additional cores.

2. **Additional Cores.** If the Engineer does not classify an initial core from a concrete pavement unit as Type AX, the Engineer will take additional cores. The Department will only consider the dimensions not within the A or X range, for adjustment based on subsequent cores. The Engineer will decide whether to accept the work, make a price adjustment of up to 100 percent, or direct the Contractor to remove and replace concrete pavement, based on the initial and additional cores.

3. **Price Adjustment for Thickness.**

   a. **Initial Core Type A.** The Department considers a Core Type A to have a thickness within the required tolerances. The Engineer will not take additional cores to measure thickness, and the Department will not apply a price adjustment to the concrete pavement unit.

   b. **Initial Core Type B.** The Department considers a Core Type B to deviate from the design thickness as shown in Table 602-2. The Engineer will take two additional cores and measure the thickness.

      The Engineer will calculate the average thickness for the concrete pavement unit. In determining the average thickness, the Engineer will record measurements of individual cores that exceed the required pavement thickness by more than ¼ inch as the required thickness plus ¼ inch.

      The Department will determine the unit price adjustment using the average thickness rounded to the nearest 0.1 inch, and Table 602-2.

   c. **Initial Core Type C.** The Department considers a Core Type C to deviate from the design thickness by more than 1.1 inches.

      The Engineer will take straddler cores to determine the area of deficiency.

The Engineer will establish a new initial core for the concrete pavement unit, excluding the deficient area, and repeat the evaluation and calculation for the concrete pavement thickness.

Remove and replace deficient areas in accordance with subsection 602.04.F.5.

4. **Price Adjustments for Steel Locations Within the Pavement.** The Department will consider two variables when considering price adjustments for steel depth — the steel location relative to the pavement surface and the deviation of the steel location from the allowable depth range. The Department will determine both and apply only the larger of the two deviations from the requirements in Table 602-3A and Table 602-3B.

   a. **Initial Core Type X.** The Department considers a Core Type X to have reinforcement placed within the required tolerances for depth from surface of pavement. The Engineer will not take additional cores, and the Department will not make a price adjustment to the concrete pavement unit for reinforcement placement.

   b. **Initial Core Type Y.** The Department considers Core Type Y to contain reinforcement that deviates from the design depth. The Engineer will take two additional cores and measure the depth of steel from concrete pavement surface for each core.

      The Engineer will calculate the average reinforcement depth.

      The Engineer will use the average reinforcement depth and Table 602-3A to determine the price adjustment based on the location of the steel from the concrete pavement surface.

      The Engineer will calculate the absolute deviation from the limits of the design depth range for each core, and the average absolute deviation from the required depth range.

      The Engineer will use the average absolute deviation and Table 602-3B to determine the contract price adjustment based on deviation from required depth of steel range.

   c. **Initial Core Type Z.** The Department considers Core Type Z to contain reinforcement that deviates from the design depth by more than the required tolerance.

      The Engineer will take straddler cores to determine the area of deficiency.

      The Engineer will establish a new initial core for the concrete pavement unit, excluding the deficient area, and repeat the evaluation and calculation of depth of steel.

      Remove and replace the deficient area in accordance with subsection 602.04.F.5.

5. **Remove and Replace.** If an initial core falls into either the Core Type C or Core Type Z category, the Engineer will delineate the deficient area by taking straddler cores at 5-foot intervals, longitudinally, in both directions from the initial core. The Department will consider defective areas separately from the remainder of the concrete pavement unit. The Contractor will remove and replace Core Type C and Core Type Z areas as directed by the Engineer. The Contractor will remove an area of pavement at least 10 feet long, for the full panel width. If the area designated for removal is within 15 feet of a transverse joint, the Contractor will remove the defective concrete pavement area to the joint. The Engineer will core and evaluate the replaced areas in accordance with subsection 602.04.F. If the concrete pavement is within the tolerances specified in Table 602-2, Table 602-3A, and Table 602-3B, the Department will pay for the replaced concrete pavement at the contract unit price.

Table 602-2
Price Adjustment for Concrete Thickness Deficiency

Initial Core Type	Deficiency in Thickness (in)	Price Adjustment (%)
A	≤0.2	0
B	0.3	−5
B	0.4	−15
B	0.5	−25
B	0.6 – 1.0	−50
C	≥1.1	−100 (a)

a. Corrective action up to and including remove and replace pavement.

Table 602-3A
Price Adjustment for Depth of Steel from Pavement Surface

Core Type	Tolerance on Depth of Reinforcement for Uniform Plan Thickness (in) (a, b, c)					Price Adjustment (%)
	7.75 – 8.50	8.75 – 9.50	9.75 – 10.50	10.75 – 11.50	Shoulder	
Z	0.0 – 0.9	0.0 – 0.9	0.0 – 0.9	0.0 – 0.9	0.0 – 0.9	−100 (e)
Y	1.0 – 1.9	1.0 – 1.9	1.0 – 1.9	1.0 – 2.4	1.0 – 2.4	−25 (e)
X (d)	2.0 – 4.0	2.0 – 4.5	2.0 – 5.0	2.5 – 5.5	2.0 – 4.0	0
Y (d)	4.1 – 4.8	4.6 – 5.4	5.1 – 6.0	5.6 – 6.6	4.1 – 5.0	−25
Y (d)	4.9 – 6.4	5.5 – 7.2	6.1 – 8.0	6.7 – 8.8	≥5.1	−50
Z (d)	≥6.5	≥7.3	≥8.1	≥8.9	—	−100 (e)

a. If the contract requires a pavement reinforced with two layers of reinforcement, the Engineer will only measure the depth of the top layer of steel.
b. To determine pavement thicknesses, use the same depth range as the pavement the shoulder is tied to. Use the average shoulder thickness, if tapered.
c. Pavement or base course.
d. If a core length measures at least 0.2 in over the plan thickness, increase the maximum depth range by one-half the excess core length over the plan thickness, round to the nearest 0.1 in, in accordance with ASTM E29, and then add it to the range shown.
e. Corrective action up to and including removing and replacing pavement.

Table 602-3B Price Adjustment for Deviation of Depth of Steel from Design Range Initial						
Core Type	**Allowable Average Absolute Deviation from Design Depth of Reinforcement per Uniform Plan Thickness (in)** (a. b, c)					**Price Adjustment (%)**
	6.5 – 7.5	**7.75 – 8.5**	**8.75 – 9.5**	**9.75 – 10.5**	**11 – 13**	
X (d)	0.0 – 0.5	0.0 – 0.5	0.0 - 0.5	0.0 – 0.5	0.0 – 0.5	0
Y (d)	0.5 – 1.0	0.5 – 1.0	0.5 – 1.0	0.5 – 1.0	0.5 – 1.0	−10
Y (d)	≥1.0	≥1.0	≥1.0	≥1.0	≥1.0	−25
Design Range	2.0 – 4.0	2.0 – 4.0	2.0 – 4.5	2.5 – 5.5	2.5 – 6.0	—

a. If the contract requires a pavement reinforced with two layers of reinforcement, the Engineer will only measure the depth of the top layer of steel.
b. To determine pavement thicknesses, use the same depth range as the pavement the shoulder is tied to. Use the average shoulder thickness, if tapered.
c. Pavement or base course.
d. If a core length measures at least 0.2 in over the plan thickness, increase the maximum depth range by ½ the excess core length over the plan thickness, round to the nearest 0.1 in, in accordance with ASTM E29, and then add it to the range shown.

Section 603. CONCRETE PAVEMENT RESTORATION

603.01. Description. This work consists of restoring concrete pavement including the following:

A. Removing and repairing portions of a concrete pavement, one lane wide and 100 feet long, or less, with reinforced and non-reinforced portland cement concrete, with the type of joint required;
B. Diamond grinding and grooving portland cement concrete pavement;
C. Resawing and sealing existing pavement joints;
D. Sawing, cleaning, and sealing cracks in concrete pavements;
E. Removing sections of concrete pavement, one lane wide and greater than 100 feet long in accordance with section 204 or subsection 603.03.B.1, as determined by the Engineer; and
F. Replacing sections of concrete pavement one lane wide and greater than 100 feet long in accordance with section 602.

Refer to Standard Plan R-44 series, R-45 series and the contract for details.

603.02. Materials. Provide material in accordance with the following:

Base Course Aggregate, 4G, 21AA, 22A 902
Curing Materials for Pavements 903
Insulating Blankets 903
HMA Mixtures for Restoring Shoulders 904
Steel Reinforcement 905
Joint Spall Repair Materials 914
Bond Breaker Material 914
Epoxy Coated Dowel Bars and Deformed Tie Bars 914
Joint Materials 914
Concrete, Grades, 3500, 3500HP 1004
Concrete, Grade P-NC 1006

Provide the concrete grade necessary to obtain the strength specified in Table 603-1 in the anticipated curing time, as determined by the Engineer. The Engineer will not require 28 day compressive strength test cylinders for concrete pavement repairs. The Engineer will perform flexural strength testing of the field cured test specimens. Acceptance will be based on the specimens attaining the minimum flexural strength prior to opening the concrete pavement repair to vehicular traffic.

Table 603-1
Opening to Traffic Strengths

Anticipated Curing Time	Concrete Grade	Minimum Flexural Strength
<72 hours	Grade P-NC (a)	300 psi
≥3 days	Grade 3500, 3500HP	550 psi

a. The Engineer may approve the use of a non-chloride Type A water reducer, a non-chloride Type C accelerating, or a Type E water reducing and accelerating admixture from the Qualified Products List to achieve the flexural strength requirements.

Provide coarse aggregate with no greater than 2.5 percent absorption in accordance with ASTM C127. Do not use calcium chloride admixture.

603.03. Construction.

A. **Equipment Requirements.** Use equipment necessary to perform the work in accordance with section 602 and the following:

1. **Drilling Machine.** Use a drilling machine and use methods to drill holes in the existing pavement vertical surfaces in accordance with the following:

   a. Support the drill on rails that rest on the pavement surface at both ends of an 8 foot long repair, or by other alignment methods approved by the Engineer, to ensure holes meet the requirements of Standard Plan R-44 series.
   b. Provide a drill that uses mechanically applied pressure for forward and reverse travel. Match the drill and pressure mechanism to drill the nominal depth holes to prevent cracking the concrete and spalling more than ½ inch horizontally or vertically.
   c. Equip the drill with a snug fitting drill guide bushing, positioned against the face of the concrete to prevent eccentricity or overriding of the holes more than $\frac{1}{16}$ inch, and to maintain the alignment tolerances.

2. **Grout Dispenser.**

   a. **Bulk Grout Systems.** Use a grout dispenser and static mixing nozzle system recommended by the grout material manufacturer. Use a machine that proportions the components, mixes the components as they are extruded through the static nozzle, and deposits the mixed material in the back of the hole.

      Use two bulk grout dispensers on the project or use one bulk grout dispenser and a two-day supply of prepackaged grout material, dispensers, and static mixing nozzles.

   b. **Prepackaged Injection Grout Systems.** Use a grout dispenser and static mixing nozzle supplied by the manufacturer of the grout material. Use a static mixing nozzle capable of depositing grout to the back of the hole.

3. **Vibratory or Roller Screeds.** Use a steel-shod vibratory screed, with the weight and vibrating frequency required to screed concrete flush with the existing pavement in a single pass.

   Use a roller screed with the weight and speed required to screed the concrete surface flush with the existing pavement in two or more passes.

Use screeds at least 6 inches longer than the width of the concrete pavement repair.

4. **Diamond Grinding Equipment.** Use diamond blades, spaced as required for the application, and mounted on a self-propelled machine designed for grinding and texturing pavement. Use equipment that will not cause damage to the underlying surface of the pavement. Do not use grinding equipment that ravels or spalls the concrete pavement, fractures aggregate, or damages the transverse or longitudinal joints. Use grinding equipment that produces the required texture. To remove residue and excess water, use vacuum equipment that extracts the slurry material from the pavement and prevents dust from escaping into the air.

5. **Diamond Grooving Equipment.** Use diamond blades, spaced as required for the application, and mounted on a self-propelled machine with a minimum head width of 3 feet, designed for grooving pavement. Use equipment that will not cause damage to the underlying surface of the pavement. Do not use grooving equipment that ravels or spalls the concrete pavement, fractures aggregate, or damages the transverse or longitudinal joints. Grooving equipment must have sufficient power, traction, stability and be able to achieve the specified uniform depth of cut, flush to all inlets, manholes, bridge joints, and other appurtenances within the paved area. To remove residue and excess water, use vacuum equipment that extracts the slurry material from the pavement and prevents dust from escaping into the air.

6. **Equipment for Sawing and Sealing Cracks.** Use equipment for sawing and sealing cracks in accordance with subsection 602.03.A.13. Equip the saw with a diamond blade with a diameter of 8 inches or less. Do not use routers.

B. **Construction of Concrete Pavement Repair.** Construct concrete pavement repairs, 100 feet long, or less, in accordance with section 602, except as modified by this subsection.

Remove existing concrete pavement in sections at least 4 feet long. When the repair area is within 4 feet of an existing joint extend the repair to at least one foot beyond the joint. When the repair area is within 8 feet of an adjacent repair, remove the concrete pavement between the two areas, or as directed by the Engineer.

Control the grades by using the adjacent pavements. If the lane adjacent to a repair area is damaged, cast the repair area and open to traffic, then perform the removal and recasting of concrete repairs in the adjacent lane. The Engineer must approve the adjacent lane repair.

If the grade cannot be established by using adjacent pavements, provide grade control according to subsections 602.03 and 824.03.

1. **Removing Existing Pavement (Concrete Pavement Repair).**

   a. **Removing and Repairing Pavement Damaged by the Contractor.** Do not use removal equipment that damages the concrete pavement that will remain in place.

      Repair spalls caused by the Contractor's operations in accordance with section 602 at no additional cost to the Department.

b. **Planned Pavement Removal and Repair.** Remove part-depth or full-depth hot mix asphalt (HMA) patches, included in the portion of pavement being removed, as removal of concrete, without regard to additional effort that may be involved in the removal of dissimilar materials. Avoid disturbing the base during removal.

Perform shoulder removal using the same method as concrete pavement removal.

If the repair areas include repairing concrete curb, curb and gutter, or valley gutter, remove and replace the curbing adjacent to the repair and in line with the joints of the repair. If curbing removal leaves a section length, less than 6 feet from the saw cut to the nearest existing curb expansion joint, remove and replace the curb to the existing curb expansion joint.

Do not begin sawing more than two weeks before concrete pavement removal. Make straight, transverse saw cuts, at right angles to the centerline of the concrete pavement, within 1 inch per lane width. Saw the longitudinal joint full-depth between adjacent lanes, ramps, shoulders, or curb and gutter. Use water, immediately after sawing, to flush slurry off the surface of the pavement.

Place concrete repairs the same day as the removal of existing concrete pavement. Remove concrete pavement between narrowly spaced saw cuts at the end of a slab with air hammers and hand tools. Except for utility cuts, install lifting devices in the slab. Lift the slab without disturbing the base. Clean the area with hand tools and remove slurry from sawed surfaces.

2. **Installing Dowels or Deformed Tie Bars in Transverse Joints.** Drill the vertical faces of the existing concrete pavement to allow the insertion of dowel bars or deformed tie bars. Re-drill holes that do not meet the required depth, diameter, and alignment, as directed by the Engineer, at no additional cost to the Department.

Clean drilled holes using oil-free compressed air with a minimum pressure of 90 psi. Fully insert the air wand into the holes.

Fill the clean drilled holes with an adhesive grout selected from the Qualified Products List. Fill the holes with adhesive grout to their full length to ensure the adhesive grout covers the embedded length of the inserted dowel bars or deformed bars. Slowly insert the bars into the holes using hand pressure and a twisting motion, until fully seated. Wipe away excess adhesive grout extruded around the bars. Do not proceed until the Engineer verifies the dowel bars are properly installed and the adhesive grout set.

Drill or punch holes in the joint filler used for expansion joints (Erg) to match the location of the holes in the existing pavement. Drill or punch the holes in the joint filler to produce neat, clean holes without excessively tearing the filler. After anchoring the dowel bars in place,

install the joint filler and position it against the existing pavement. Extend the joint filler the full-depth of the repair and install flush with the existing pavement surface. Place the joint filler in one continuous length, so it covers the entire vertical surface and is in full contact with the sawed joint face, unless otherwise approved by the Engineer.

Coat the portions of dowel bars that extend beyond the face of the existing pavement or the joint filler with an approved bond-breaking coating. Do not coat deformed bars used with tied joints (Trg) or anchored-in-place lane ties with bond-breaking coating.

Install an approved expansion cap on the end of each dowel bar for expansion joints (Erg), after applying the bond breaker.

3. **Site Preparation.** If the plans show base corrections, excavate and backfill in accordance with section 205 and section 302. When the existing base is more than 2 inches lower than the required grade, correct the low base by adding base course aggregate and compacting to the required density and elevation. Increase the repair thickness, when the existing base is 2 inches or less below the required grade due to existing conditions or as a result of concrete pavement removal operations.

   Set forms to the line and grade shown on the plans. Use one-piece forms for repairs 10 feet or less. For repairs greater than 10 feet, use forms that lock together or splice sections to provide a continuous form. Provide metal or wood forms. If using wood side forms, use lumber with a nominal thickness of at least 2 inches.

   For reinforced concrete, position and support reinforcement in accordance with the *Sta*ndard Plans.

4. **Longitudinal Joints.** If casting more than one lane in a single pour, construct longitudinal joints in line with the existing longitudinal joints. Construct longitudinal joints to a depth of ⅓ the thickness of the pavement by sawing or forming before opening to traffic.

   Install lane ties in accordance with Standard Plan R-44 series. Construct anchored-in-place lane ties in accordance with subsection 603.03.B.2, for deformed bars used with tied joints (Trg), except the use of handheld drills will be allowed.

5. **Transverse Joints.** If the contract requires an existing curb left in place, and there is an expansion space in the adjacent lane repair, saw an expansion joint (Esc) in the curb. Construct the joint in line with and equal in width to the expansion joint in the adjacent lane repair. Shape the joint filler to match the curb cross section.

6. **Placing Concrete.** Immediately before concrete placement, wet the faces of the existing pavement and the surface of the aggregate base with water.

Cast each repair in one continuous full-depth operation. Consolidate the concrete using a hand-held immersion-type vibrator, approved by the Engineer. Consolidate the concrete around dowel bars, deformed tie bars, and deformed lane tie bars.

7. **Finishing Concrete.** Strike off the surface flush with the existing pavement surface at least twice with a vibratory or roller screed. Do not float in lieu of striking off. For repairs 15 feet long or less, place the screed parallel to the centerline of the roadway. For repairs greater than 15 feet long, place the screed perpendicular to the centerline.

   While the concrete is still plastic, check that the edges of the repair surface are flush with the edges of the existing concrete pavement, and verify the necessary grades are met.

   For repairs 10 feet long or less, place the straightedge parallel to the pavement centerline with the ends resting on the existing pavement and draw the straightedge across the repair. Use a straightedge no greater than 6 inches longer than the repair. Keep the straightedge in contact with the existing pavement while drawing it across the repair. Correct high or low spots greater than ⅛ inch, recheck the surface after making corrections, and eliminate irregularities.

   For repairs greater than 10 feet long, use a straightedge in accordance with subsection 602.03.I. Make the first and the last measurement with half the straightedge resting on the existing pavement. Make the second and the next to last measurement with 2 inches to 3 inches of the straightedge resting on the existing pavement. Correct high or low spots greater than ⅛ inch.

   Before texturing, run an edger with a ⅛-inch to ¼-inch radius along the perimeter of the repair. Remove forms after the concrete attains the strength required to prevent sagging or spalling upon removal of the forms.

8. **Texturing.** Texture the surface of the repair to match texturing on the adjacent concrete pavement.

9. **Stenciling.** Stencil the month and the year in each repair in accordance with subsection 602.03.L. If repair operations cause the removal of the existing stationing, stencil the station in the repair at the required location.

10. **Curing.** Apply the curing compound immediately after free water evaporates from the concrete pavement surface. Do not delay curing compound application for other work during concrete pavement placing and finishing operations.

    Use white membrane curing compound, unless the repair requires a bituminous overlay. For repairs requiring bituminous overlay, use transparent curing compound. Apply the required curing compound in two coats, at a rate of at least 1 gallon per 25 square yards for each coat.

Stop concrete pavement placement if the curing compound application process fails to meet the requirements specified in this subsection. Maintain the placed and finished concrete in a continuously moist condition, using fog mist, until membrane curing compound is applied. Alternative methods for keeping concrete continuously moist may be approved by the Engineer.

Reapply curing compound immediately to surfaces damaged by rain, joint sawing, Contractor foot traffic, or other activities.

Place insulated blankets to meet open-to-traffic requirements and protect the concrete pavement from weather damage. Provide insulated blankets at least 2 inches thick. When the air temperature falls below 50 °F during the curing period, place blankets over the repaired area, as soon as the curing compound dries. Secure edges and seams in the blanket to prevent heat loss. Protect the concrete until it attains the minimum flexural strength specified in Table 603-1.

Comply with the methods included in the quality control plan for achieving open-to-traffic strength within the required time period.

The maturity method may be used at no additional cost to the Department, after submitting a plan to the Engineer for approval, to determine the in-place opening-to-traffic flexural strength. Make the necessary preliminary flexural strength versus opening-to-traffic time correlations before placing the concrete.

Cure test beams for open-to-traffic strengths in the same manner as the repair.

11. **Cleaning Joints.** Remove concrete from the top of any joint filler prior to blast cleaning. Immediately before sealing joints, blast clean, except tied joints (Trg), and then finish clean the joint again using oil-free compressed air with a minimum pressure of 90 psi to remove all debris. Insert a backer rod in the bottom of the contraction joint (Crg) reservoir after the final cleaning and before sealing.

12. **Sawing Joints.** Do not construct reservoirs for seals in the following joints:

    a. Joints in base course repairs;
    b. Joints in repairs constructed in preparation for HMA overlays; and
    c. Reinforced anchored tied joints (Trg).

    For all other joints and saw cuts in concrete pavements, shoulders, or gutters, caused by overcutting, clean and seal using hot-poured joint sealant.

    Before sealing joints, remove the joint filler from the top of the joint by sawing 1 inch wide and 1½ inches deep.

Saw joint reservoirs for the contraction joints (Crg).

Saw joint reservoirs for C2 joints and E2 joints after the concrete pavement attains the strength required to prevent excess raveling or spalling, but before random cracks develop. Forming of joint reservoirs is not allowed. Saw the initial relief cut and extend the reservoir to the plan width and depth in accordance with subsection 602.03.N, or initially saw to the width and depth shown on the plans.

13. **Sealing or Resealing Transverse and Longitudinal Pavement Joints.** After completion of concrete pavement repairs, spall repairs, and pavement texturing, saw the transverse and longitudinal joints over the existing joint reservoir to remove existing sealant and produce a finished joint with two freshly sawed faces. Immediately after sawing, flush the joint reservoir with water to remove the slurry and debris. After final cleaning of the joints, insert a backer rod into the transverse joint, creating a 1:1 width to depth ratio for hot-poured sealant. Seal the joint reservoir to no greater than ⅛ inch (after cooling) below the concrete pavement surface for transverse and longitudinal joints and in accordance with subsection 602.03.S.

14. **HMA Shoulder Replacement.** Before opening to traffic, restore HMA shoulders to the existing line and grade using a plant-mixed HMA, as directed by the Engineer. Replace cold patch mixtures for temporary patching with plant-mixed HMA, unless the plans show shoulder reconstruction as part of the project. Compact the HMA using mechanical or hand methods required for the size of the repair area. Fill the voids and compact flush with the surrounding shoulder. Place HMA at the required compaction temperatures.

    Properly dispose of materials removed from the shoulder.

15. **Opening to Traffic.** The concrete pavement must attain the required minimum flexural strength, and all joints must be sawed and sealed in accordance with subsection 603.03.B before opening to traffic. The Engineer may allow traffic over the repair before the joints are cleaned and sealed.

C. **Diamond Grinding and Grooving Concrete Pavement.** Complete all pavement repair and joint restoration work, except sealing, before diamond grinding and grooving.

Diamond grind and groove concrete pavement in the longitudinal direction beginning and ending at lines perpendicular to the pavement centerline. Stop grinding and grooving if conditions cause water to freeze.

Do not disturb reflective pavement markers (RPM). Taper grinding to the existing pavement surface within 2 inches of the RPM.

Texture at least 95 percent of the pavement surface unless otherwise directed by the Engineer. Extra depth grinding to eliminate minor depressions is not required.

After initial grinding, regrind faulted areas, greater than 1/16 inch, at transverse cracks and joints, until faulting is less than 1/16 inch.

Uniformly groove a parallel corduroy-type texture, consisting of grooves with a width of ⅛ inch and a depth of 5/32 inch with a tolerance of 1/32 inch. The grooves must be spaced at ¾ inch on center with a tolerance of 1/16 inch. Do not texture the pavement surface within 1½ inches of longitudinal joints. Provide a mean texture depth from 0.04 inch to 0.10 inch, in accordance with ASTM E965.

Construct a uniform transverse slope with no depressions or misalignment greater than ⅛ inch when checked with a 10-foot straightedge. The Engineer will not apply straightedge requirements across longitudinal joints or outside ground areas. Transition grind the shoulder to provide cross slope drainage.

To provide drainage and the required riding surface, transition grind auxiliary or ramp lanes from the mainline edge. The Engineer will determine the transitions from ground to unground pavement surfaces.

Seal joints after grinding and grooving.

1. **Control and Disposal of Grinding and Grooving Slurry.** Before beginning grinding and grooving, obtain the Engineer's approval of the slurry spreading and disposal method.

   Do not allow grinding and grooving slurry to enter enclosed drainage systems.

   If approved by the Engineer, spread slurry along the roadway slopes with the following restrictions:

   a. Spread slurry at least 5 feet away from the curb.
   b. Do not spread the slurry within 100 feet of a natural stream or lake.
   c. Do not spread slurry within 5 feet of a water-filled ditch.

   If surface runoff occurs, collect and haul the grinding and grooving slurry to an Engineer-approved location on the project at no additional cost to the Department.

2. **Testing Diamond Grinding and Grooving Slurry.** The Department will take random samples of the grinding and grooving slurry and cooling water for chemical testing. Allow Department personnel access to obtain the samples.

D. **Resealing Pavement Joints.** Saw, or re-saw, clean, and seal longitudinal and transverse concrete pavement joints in accordance with subsection 602.03.S and the following.

Saw longitudinal and transverse joints as required by the contract. Re-saw existing longitudinal and transverse joints from 1 inch to 1¼ inches deep, and of sufficient width to establish a clean

face each side of the joint reservoir. Immediately after sawing, flush the joint reservoir with water to remove slurry and debris.

Provide a final cleaning just before sealing, in accordance with subsection 602.03.R. After the final cleaning, insert a backer rod into the transverse joint to provide a 1:1 width to depth ratio of joint sealant.

The joint faces and pavement surface must be dry before sealing joints. Seal the joint reservoir to no more than ⅛ inch (after cooling) below the surface of the pavement.

E. **Sawing and Sealing Cracks.** Seal cracks with a hot-poured sealant as follows:

Saw cracks from ½ inch to ⅝ inch deep and from ⅜ inch to ½ inch wide.

After sawing, use hand tools or a lightweight chipping hammer to remove slivers of concrete, less than 1 inch wide, along the crack. Immediately before sealing, blast clean both faces of the sawed crack with dry abrasive to remove contamination and texture the faces. After dry abrasive blasting, clean the crack to remove debris using oil-free compressed air with a minimum pressure of 90 psi.

The joint faces and pavement surface must be dry before sealing joints. If the crack below the sealant reservoir is greater than ⅜ inch wide, insert a backer rod into the crack to form the bottom of the reservoir at the required depth. Seal the crack to no more than ⅛ inch (after cooling) below the surface of the pavement.

If required by the crown of the roadway and the slope of the shoulder, fill the reservoir in two or more passes, place temporary dikes in the sealed reservoir, or use both methods. Remove the temporary dikes before the sealant fully cools and seal the resulting cavity. Apply the additional sealant before the previous application becomes contaminated.

603.04. Measurement and Payment.

Pay Item	**Pay Unit**
Pavt Repr, Rem	Square Yard
Saw Cut, Intermediate	Foot
Pavt Repr, Reinf Conc, __ inch	Square Yard
Pavt Repr, Nonreinf Conc, __ inch	Square Yard
Non-Chloride Accelerator	Gallon
Joint, Contraction, Crg	Foot
Joint, Expansion, Erg	Foot
Joint, Expansion, Esc	Foot
Joint, Tied, Trg	Foot
Lane Tie, Epoxy Anchored	Each
Diamond Grinding Conc Pavt	Square Yard

Diamond Grooving Conc Pavt..... Square Yard
Diamond Grinding and Grooving Conc Pavt ..... Square Yard

Resealing Trans Joints with Hot-Poured Rubber ..... Foot
Resealing Longit Joints with Hot-Poured Rubber ..... Foot
Crack Sealing, Conc Pavt ..... Foot
Cement..... Ton

A. **Price Adjustments for Concrete Pavement Repairs.** The Engineer will determine the final concrete pavement repair thickness in accordance with subsection 603.04.C. The Department may core the concrete pavement repairs and will adjust the unit prices for repairs that do not meet the required depth or the required reinforcement location in accordance with subsection 602.04.

B. **Pavement Repair, Removal.** The Department considers **Pavt Repr, Rem** the removal of pavement sections without disturbing the base, as shown on the plans. The unit price for **Pavt Repr, Rem** includes the cost of the following:

1. Moving from repair to repair;
2. Establishing grade;
3. Saw cutting;
4. Removing adjacent concrete shoulders, curb, curb and gutter, and valley gutter;
5. Removing part-depth or full-depth HMA patches;
6. Lifting the repair section without disturbing the base;
7. Loading, hauling, and disposing of the removed material; and
8. Placing HMA mixture, as necessary, to restore the shoulders to the existing line and grade.

The Department will include the pay item, **Saw Cut, Intermediate** for sections of pavement on which the plans show **Pavt Repr, Rem**. The Department will not include the pay item, **Saw Cut, Intermediate** for sections of pavement on which the plans show **Pavt, Rem**. The Department will pay for intermediate saw cuts for concrete pavement repairs over 6 feet long, but less than 100 feet long, to allow loading onto hauling units, as **Saw Cut, Intermediate**. The Department will not pay separately for additional saw cuts to reduce slabs into pieces smaller than one lane width by 6 feet long.

The Department will pay for the removal of portions of concrete that contain partial, or full-depth HMA patches as **Pavt Repr, Rem**.

C. **Pavement Repair, Reinforced Concrete, and Pavement Repair, Non-reinforced Concrete.** The Department will establish a concrete pavement thickness for repairs, as shown on the plans, based on the original plan thickness of the existing concrete pavement plus 1 inch. The minimum thickness of the concrete pavement repair may vary by no more than 1 inch from the thickness shown on the plans.

The Department will not pay separately for work required to correct low base conditions caused by Contractor removal operations. The Department will pay for site preparation to correct base, more than 2 inches below the required grade, not caused by Contractor operations, under the relevant pay items. If the contract does not include a relevant pay item, the Department will pay for base corrections greater than 2 inches deep, not caused by Contractor operations, as extra work.

1. **Repair.** The Engineer will measure **Pavt Repr, Reinf Conc**, and **Pavt Repr, Nonreinf Conc**, of the thickness specified, longitudinally along the pavement surface, and will use the transverse dimension shown on the plans.

   The unit prices for **Pavt Repr, Reinf Conc**, and **Pavt Repr, Nonreinf Conc** include the cost of the following:

   a. Moving from repair to repair;
   b. Establishing grade;
   c. Providing, placing, finishing, texturing, stenciling, and curing the concrete;
   d. Providing and placing bar chairs and the steel reinforcement; and
   e. Providing additional concrete, as necessary, to correct low base conditions that do not exceed 2 inches measured from the required grade.

D. **Repair of Concrete Shoulders, Curbs, and Curb and Gutter.** The Engineer will measure repairs for concrete shoulders, curbs, and curb and gutter as **Pavt Repr, Nonreinf, Conc**, at the same thickness as adjacent concrete pavement repairs. The Department will pay for repairing concrete shoulders, curbs, and curb and gutter as **Pavt Repr, Nonreinf, Conc**.

E. **Joints.**

1. **Contraction Joints (Crg).** The unit price for **Joint, Contraction, Crg** includes the following:

   a. Making the saw cuts required at the ends of the repairs;
   b. Removing saw slurry from the pavement surface and sawed faces;
   c. Drilling and cleaning holes for dowel bars and deformed bars;
   d. Providing, mixing, and installing adhesive grout;
   e. Providing and installing dowel bars or deformed bars;
   f. Providing and applying the dowel bar bond breaker coating;
   g. Sawing the joint reservoirs;
   h. Cleaning and preparing the joint reservoir; and
   i. Providing and installing the joint reservoir sealant.

2. **Expansion Joint, Esc.** The unit price for **Joint, Expansion, Esc** includes the cost of sawing the joint, providing and installing the joint filler material, and installing the joint reservoir sealant.

3 **Expansion, Erg.** The unit price for **Joint Expansion, Erg** includes the cost of the following:

a. Making the saw cuts required at the ends of the repairs;
b. Removing the saw slurry from the pavement surface and sawed faces;
c. Drilling and cleaning the holes for the dowel bars;
d. Providing, mixing, and installing the adhesive grout;
e. Providing and installing the dowel bars;
f. Providing and applying the dowel bar bond breaker coating;
g. Providing, drilling or punching, and installing the joint filler;
h. Providing and installing the dowel bar expansion caps;
i. Sawing the joint reservoirs;
j. Cleaning and preparing the joint reservoir; and
k. Providing and installing the joint reservoir sealant.

The Department will pay for sawing depths, greater than 1 inch below the depth shown on the plans, as extra work.

4. **Transverse Plane-of-Weakness Joints.** The Engineer will measure, and the Department will pay for transverse plane-of-weakness joints in accordance with subsection 602.04.

5. **Tied Joints (Trg).** The unit price for **Joint, Tied, Trg** includes the cost of the following:

a. Removing saw slurry from the pavement surface and sawed faces;
b. Drilling and cleaning holes for dowel bars and deformed bars;
c. Providing, mixing, and installing adhesive grout; and
d. Providing and installing dowel bars or deformed bars.

6. **Longitudinal Joints.** The unit prices for other pay items include the cost of sawing and sealing internal and external longitudinal joints.

F. **Lane Tie, Epoxy Anchored.** The unit price for **Lane Tie, Epoxy Anchored** includes the cost of the following:

1. Drilling and cleaning the holes;
2. Providing, mixing, and installing the adhesive grout; and
3. Providing and installing the deformed bars.

The unit prices for other pay items include the cost of final trim and clean-up, part-width construction, and restoring shoulders.

G. **Diamond Grinding and Grooving Concrete Pavement.** The Engineer will include the final textured surface area in the measurement for **Diamond Grinding Conc Pavt**, **Diamond Grooving Conc Pavt**, and **Diamond Grinding and Grooving Conc Pavt**. The Department will

not deduct minor areas of untextured pavement if the minor areas total no greater than 5 percent of the area shown on the plans.

The unit price for **Diamond Grinding Conc Pavt**, **Diamond Grooving Conc Pavt**, and **Diamond Grinding and Grooving Conc Pavt** includes the cost of cleanup, collecting, hauling, and disposing of grinding slurry. The unit prices for other pay items include the cost of additional passes or regrinding to meet ride quality requirements.

H. **Resealing Transverse and Longitudinal Joints with Hot-Poured Rubber.** The Engineer will measure **Resealing Trans Joints with Hot-Poured Rubber** and **Resealing Longit Joints with Hot-Poured Rubber** in a straight line in the direction of each joint. The unit prices for **Resealing Trans Joints with Hot-Poured Rubber** and **Resealing Longit Joints with Hot-Poured Rubber** include the cost of removing existing sealants, sawing, cleaning, and sealing the joints.

I. **Crack Sealing, Concrete Pavement.** The Engineer will measure **Crack Sealing, Conc Pavt** in a straight line in the direction of each crack.

DIVISION 7 – STRUCTURES

Section	Title	Page No.
701	Reserved	XX
702	Reserved	XX
703	Reserved	XX
704	Steel Sheet Piling and Cofferdams	XX
705	Foundation Piling	XX
706	Structural Concrete Construction	XX
707	Structural Steel Construction	XX
708	Structural Prestressed Concrete Construction	XX
709	Timber Structures	XX
710	Waterproofing and Protective Covers	XX
711	Bridge Railings	XX
712	Bridge Rehabilitation – Concrete	XX
713	Bridge Rehabilitation – Steel	XX
714	Temporary Structures and Approaches	XX
715	Cleaning and Coating Existing Structural Steel	XX
716	Shop Cleaning and Coating Structural Steel	XX
717	Downspouts and Drains	XX
718	Drilled Shafts	XX

NOTES

DRAFT – July 2020

Section 701. RESERVED

Section 702. RESERVED

Section 703. RESERVED

Section 704. STEEL SHEET PILING AND COFFERDAMS

704.01. Description. This work consists of the following:

A. Providing and driving permanent steel sheet piling;
B. Designing, providing, installing, maintaining, and removing temporary steel sheet piling, bracing, tie backs, walers, and related material or cutting off temporary steel sheet piling left in place; and
C. Designing, providing, installing, maintaining, and removing cofferdams, sheet piling, bracing, tie backs, walers, and related material or cutting off cofferdams left in place.

704.02. Materials. Provide material in accordance with the following:

Geosynthetics 910
Steel Sheet Piling..... 906

Provide new or used continuous interlock-type steel sheet piling including connections and corner pieces. Used steel sheet piling must be in good condition and its use must be approved by the Engineer. Provide temporary steel sheet piling and cofferdams with a nominal section modulus of at least 18.1 cubic inches per foot of wall when installed adjacent to traffic or when supporting traffic loads. Provide the permanent steel sheet piling section modulus shown on the plans.

For permanent installations, provide structural steel, high strength steel bolts, nuts and washers in accordance with 906.

The Contractor may provide cold-rolled sheeting for applications specified in this section.

704.03. Construction.

A. **Design.** Design steel sheet piling and cofferdams, in accordance with the AASHTO *Standard Specifications for Highway Bridges*, 17th edition, and the contract.

Include the following information, as applicable, in the design and on working drawings:

1. Sheet piling section modulus and embedment depth;
2. Design criteria for bracing and bracing sections, connections, tie-back details, and deadman sections;
3. Assumptions and references for the design calculations;
4. Any loads for construction equipment, construction materials, traffic loading, and any unbalanced hydrostatic pressure loading; and
5. Profile views and plan views with cross sections.

Submit an electronic file copy of the proposed design, supporting calculations, and working drawings for steel sheet piling and cofferdams to the Engineer for review not less than 14 calendar days before beginning work. Document each stage of construction on the working drawings.

At cofferdam and steel sheet piling locations where the combined depth of retained water and/or soil is 6 feet or greater, the working drawings and design calculations must be prepared and sealed by a professional engineer licensed in the State of Michigan. The professional engineer must be competent in geotechnical and structural engineering.

For cofferdams with a tremie seal, the minimum top of cofferdam elevation must be the design water surface elevation for the tremie seal. Cofferdam construction must ensure no free-flowing water into the cofferdam.

Do not begin installation until after the Engineer approves the design and working drawings. The Engineer will not make allowance for increases in cost or lost time associated with resubmittals of the design due to comments or questions from the Department.

Provide a copy of any steel sheet piling or cofferdam design and working drawings at the job site as required by MIOSHA *Construction Safety Standards*.

B. **Driving Steel Sheet Piling.** Drive, brace, and cut off steel sheet piling in accordance with the Contractor's temporary sheet piling and cofferdam design and working drawings and the contract.

Drop hammers may be used. Unless otherwise shown on the plans, vibratory hammers may be used.

Cut off temporary steel sheet piling, left in place, to the elevation shown on the plans. Do not pull up or redrive temporary steel sheet piling, left in place, to match the cutoff elevation required, unless otherwise shown on the plans or approved by the Engineer. Coordinate steel sheet piling and cofferdams with the construction staging required by the contract.

After casting adjoining concrete, do not drive steel sheet pilings to a greater depth. To lower the top of sheet piling after placing adjoining concrete, remove by cutting.

Do not install or remove steel sheet piling within 25 feet of newly placed concrete until the concrete attains at least 70 percent of the required minimum 28-day flexural or compressive strength.

C. **Cofferdams.** Construct partial or total enclosure cofferdams to allow construction of substructures, above the tremie seal or subfooting, in the dry without damaging the work. The Engineer may approve alternate methods, instead of cofferdams. The Engineer will consider approval after receiving applicable MDEGLE or other permits for the alternate method.

Construct cofferdams with interior clearance for constructing forms, inspecting form exteriors, and to allow pumping outside the forms. Construct cofferdams to protect the work from damage from

high water and prevent damage to the foundation by erosion. Align or enlarge cofferdams that tilt or move laterally to provide required clearance.

Do not brace cofferdams to substructure forms. Bracing which extends into or remains in the finished concrete is not permitted.

If the plans call for a tremie seal, maintain the water level inside the cofferdam equal to the water level outside the cofferdam until the tremie seal is placed and attains the required minimum strength in accordance with subsection 706.03.H.3.

If dewatering, pump from a sump located outside the forms. If the plans do not call for a tremie seal, discharge water pumped from a cofferdam into a geotextile filter bag. After placing tremie seal and initially dewatering into a geotextile filter bag, silt-free and sediment-free water may be pumped directly into the watercourse, if approved by the Engineer.

Remove cofferdams without disturbing or marring finished concrete.

Cut off the cofferdams, left in place, to the elevation shown on the plans. Do not pull up or redrive cofferdam sheeting to match the cutoff elevation, unless otherwise shown on the plans or approved by the Engineer.

D. **Field Welding.** Perform field welding in accordance with the AWS D1.1, *Structural Welding Code – Steel* (AWS D1.1). Welding personnel, such as welders, welding operators, and tack welders, must be qualified in accordance with AWS D1.1. Testing must be in accordance with the *MDOT Welder Certification Program*. The period of effectiveness for field welding personnel endorsed through *MDOT's Welder Certification Program* is two years unless welding personnel are not engaged in a welding process for at least six months or a specific reason exists to question the welder personnel's ability. The Engineer may require a confirming performance test during the progress of the work.

704.04. Measurement and Payment.

Pay Item	**Pay Unit**
Steel Sheet Piling, Permanent	Square Foot
Steel Sheet Piling, Temp	Square Foot
Steel Sheet Piling, Temp, Left in Place	Square Foot
Cofferdams (Structure Identification)	Lump Sum
Cofferdams, Left in Place (Structure Identification)	Lump Sum

All costs associated with shop or field welder endorsement to the MDOT *Welder Qualification Program* testing including, but not limited to providing the specimen test plates, completing performance testing, and submittal of qualification specimen will be at the Contractor's expense.

A. **Steel Sheet Piling.**

1. **Steel Sheet Piling Permanent.** The Engineer will calculate quantities of **Steel Sheet Piling, Permanent** based on the lines and lengths below cutoff, shown on the plans or authorized by the Engineer.

2. **Steel Sheet Piling, Temp and Steel Sheet Piling, Temp, Left in Place.** The Engineer will calculate quantities of **Steel Sheet Piling, Temp** and **Steel Sheet Piling, Temp, Left in Place** based on the area of earth retention. The Engineer will calculate the vertical dimension of the area, based on the difference in ground elevations at the sheeting line, or the planned foundation excavation limits at the sheeting line, whichever is less. Unless otherwise shown on the plans, the Engineer will calculate the lateral limits based on the design specified in subsection 704.03.A.

   If retaining earth on both sides of the same steel sheet piling during different construction stages, the Engineer will calculate the quantity based on the stage requiring the largest area of earth retention; not the sum of the areas of earth retention for each stage.

   The Engineer will take horizontal measurements along the sheet piling alignment without allowance for the structural shapes of the separate sections.

   a. **Steel Sheet Piling, Temp.** The unit price for **Steel Sheet Piling, Temp** includes designing, providing, installing, maintaining, and removing the sheet piling, bracing, tie backs, walers, deadmen, related material, and equipment required to maintain support of the sheeting and adjacent embankment.

   b. Steel Sheet Piling, Temp, Left in Place. The unit price for **Steel Sheet Piling, Temp, Left in Place** includes designing, providing, installing, maintaining, and cutting off the sheet piling, bracing, tie backs, deadmen, walers, related material, and equipment required to maintain support of the sheeting and adjacent embankment.

B. **Cofferdams.** The Engineer will measure, and the Department will pay for filter bags as specified in subsection 208.04.

1. **Cofferdams.** If the contract includes a separate pay item for **Cofferdams**, the Engineer will group and measure cofferdams for the structure as a unit. The unit price for **Cofferdams**, of the type required, includes designing, providing, installing, maintaining, dewatering and removing sheet piling, bracing, tie backs, walers, deadmen, and related material.

2. **Cofferdams, Left in Place.** If the contract includes a separate pay item for **Cofferdams, Left in Place**, the Engineer will group and measure cofferdams specified as left in place for the structure as a unit. The unit price for **Cofferdams, Left in Place** includes designing, providing, installing, maintaining, dewatering and cutting off of sheet piling, bracing, tie backs, walers, deadmen, and related material.

If the contract does not include a pay item for **Cofferdams** or **Cofferdams, Left in Place**, the cost of constructing a cofferdam for structures not crossing streams is included in the unit prices for other items of work; for structures crossing streams or encroaching on water courses, the cost of constructing a cofferdam will be paid for as extra work.

If the Engineer authorizes an alternate method to a sheet pile cofferdam, the Department will pay for the alternate method at the unit price for **Cofferdams** or **Cofferdams, Left in Place**.

Section 705. FOUNDATION PILING

705.01. Description. This work consists of providing and driving timber piles, cast-in-place concrete piles, and steel piles. The following definitions apply to this work:

CIP. In this section, the abbreviation for cast-in-place.

Manufacturer. The company that manufactures the pile driving equipment including hammers and appurtenances.

705.02. Materials. Provide materials in accordance with the following:

Concrete, Grade 4000	1004
Granular Material, Class II	902
Steel Reinforcement	905
Foundation Piles	906
Water	911
Treated Timber Piles	912
Pile Points and End Plates	906
Pile Protection	906

Provide new or used steel piles, consisting of the rolled structural steel shapes meeting yield strengths shown on the plans or the Engineer's authorization. Used steel piles must be in good condition meeting the approval of the Engineer. Provide new steel shells for watertight Cast-In-Place (CIP) Concrete Piles. Provide end plates for CIP Concrete Piles.

Provide steel reinforcement meeting the yield strength shown on the plans.

Provide full length treated timber piles.

Provide Concrete, Grade 4000 for CIP Concrete Piles. Provide natural aggregate and with no greater than 2.50 percent absorption as specified in ASTM C127 for structure concrete. Do not use slag aggregate.

705.03. Construction.

A. **Piling.**

1. **Storage and Handling of Piles.** Store piles off the ground with cribbing to prevent bending or distorting the piles.

   Store and handle piles to prevent dirt, water, or other deleterious material from entering steel shells for CIP concrete piles.

Handle timber piles in accordance with subsection 709.03.

2. **Equipment.** Size pile driving equipment to drive production and test piles without damage, in accordance with this subsection. Do not use driving equipment that damages the piling.

   Submit a description of pile driving equipment and a completed Form 1956 *LRFD Pile and Driving Equipment Data* to the Engineer for review and approval at least 14 calendar days before beginning pile driving. The pile driving equipment includes the pile driving hammer, hammer cushion, helmet, pile cushion, and other appurtenances. The Engineer will evaluate the proposed driving system using the dynamic formula, the wave equation analysis, or both.

   The Engineer will use the required number of hammer blows per inch and the pile driving stresses over the entire driving process to evaluate pile driving equipment.

   Select pile driving equipment that installs piles at a rate from 2 blows per inch to 10 blows per inch, at the required nominal pile driving resistance, for every method of pile resistance certification.

   For preliminary hammer selection purposes, the minimum and maximum hammer energy may be estimated as follows:

   $E_d \geq 0.082(R_{ndr} + 100)^2$ Formula 705-1

   $E_d \leq 0.193(R_{ndr} + 100)^2$ Formula 705-2

   Where:

   R_{ndr} = Nominal pile driving resistance measured during pile driving in kips.
   E_d = Energy developed by the hammer per blow in foot-pounds.

   For pile stresses determined by wave equation analysis, do not exceed the maximum pile driving stresses specified in Table 705-1 for the entire driving operation.

Table 705-1
Maximum Pile Driving Stress

Pile Material	Maximum Pile Driving Stress
Steel	90% of the yield strength
Timber	3.1 ksi (F_{co} = 0.9)

   The Engineer will predict pile stresses for vertical piles using wave equation analysis, based on hammer efficiencies specified in Table 705-2.

Table 705-2 Hammer Efficiencies	
Hammer Type	**Efficiency (%)**
Single Acting Air	67
Double Acting Air	50
Diesel	80
Hydraulic or Diesel with Built-in Energy Measurement	95
Drop	25 – 40

The Engineer will notify the Contractor of acceptance or rejection of the driving system within 7 calendar days of receiving the *LRFD Pile and Driving Equipment Data* form (Form 1956). If the Engineer rejects the driving system, modify or replace the proposed methods or equipment, at no additional cost to the Department.

Use the approved system during pile driving operations. Submit revised pile driving equipment data to the Engineer for review and acceptance before changing driving system. The Engineer will notify the Contractor of acceptance or rejection of the driving system changes within 7 calendar days of the Engineer's receipt of the requested change. The Department will not grant an extension of time for time required for submission, review, and approval of a revised driving system.

The Engineer's approval of pile driving equipment does not relieve the Contractor of responsibility to drive piles without damage to the required nominal pile driving resistance and the minimum pile penetration elevation shown on the plans.

Use air, diesel, or hydraulic hammers to drive piles.

a. **Air Impact Hammers.** Operate air hammers within the manufacturer's specified ranges. Provide the Engineer with the hammer specifications to determine the energy developed by the hammer with each blow. Use striking parts that weigh at least 2.75 kips and at least ⅓ the combined weight of pile and helmet.

   Provide the power plant and equipment for air hammers with a capacity capable of maintaining, under working conditions, the air volume and pressure at the hammer, as specified by the manufacturer. Equip the power plant and equipment with accurate pressure gauges, easily accessible to the Engineer.

   Connect the compressor to the hammer with a hose of at least the minimum size recommended by the manufacturer.

   The Engineer will evaluate hammer performance at the end of driving by measuring blows per minute and comparing with the manufacturer's recommendations. Measure the blow rate using an automatic measuring device.

b. **Diesel Impact Hammers.** For open-end, single acting hammers, provide the Engineer with a chart from the hammer manufacturer equating stroke and blows per minute. The Engineer will determine the average hammer stroke at the end of drive from the blow rate in blows per minute or by using an automatic measuring device to determine average hammer stroke. Equip open-end diesel hammers with rings, or other device on the ram to allow the Engineer to visually determine hammer stroke during pile driving operations.

   Equip closed-end, double acting hammers with a bounce chamber pressure gauge, mounted near ground level and easily accessible to the Engineer. Provide a correlation chart of bounce chamber pressure and potential energy. The Engineer will determine the average hammer stroke at the end of drive from bounce chamber pressure.

c. **Hydraulic Impact Hammers.** Operate hydraulic hammers within the manufacturer's specified ranges. Provide a power plant for hydraulic hammers with a capacity capable of maintaining the hydraulic volume and pressure specified by the manufacturer. Equip the power plant with pressure gauges, easily accessible to the Engineer.

   Equip hydraulic hammers with an energy readout device. Provide wave equation analysis to the Engineer indicating the nominal pile driving resistance of the pile. The Engineer will use the wave equation analysis to determine the capability of the hammer. Do not use Formula 705-1 through Formula 705-5 for calculating the nominal pile driving resistance.

d. **Drop Impact Hammers.** Drop impact hammers may be used to drive timber piles, if allowed by the contract.

   Do not use drop hammers for piles where the required nominal pile driving resistance exceeds 200 kips. If the contract allows drop hammers, use a ram that weighs at least 2 kips and the height of drop is no greater than 12 feet. Do not use a ram weight less than the combined weight of the helmet and the pile. Equip drop hammers with hammer guides and a helmet to ensure concentric impact.

e. **Non-Impact Hammers.** Do not use non-impact hammers, including vibratory hammers, or driving aids, followers, and prebored holes unless approved by the Engineer in writing or stated in the contract.

3. **Additional Equipment or Methods.** If using a hammer specified in subsection 705.03.A.2 does not obtain the minimum pile penetration elevation, provide a hammer of greater energy or, if approved by the Engineer, use supplemental methods, such as preboring. The Engineer will conduct additional wave equation analyses for the new hammers to assess predriving pile stresses in accordance with subsection 705.03.A.2.

B. **Driving Appurtenances.**

1. **Hammer Cushion.** Equip impact pile driving equipment with a hammer cushion to prevent damage to the hammer or pile, except drop hammers and hammers designed for use without hammer cushions.

   Provide hammer cushions fabricated from durable manufactured materials that will retain uniform properties during driving. Do not use wood, wire rope, or asbestos hammer cushions. Place a striker plate on the hammer cushion to ensure uniform compression of the cushion material.

   Remove the hammer cushion from the helmet and inspect in the presence of the Engineer before beginning pile driving at each structure or after each 100 hours of pile driving, whichever is less. Replace the hammer cushion if the thickness is reduced more than 25 percent of the original thickness before continuing driving.

2. **Helmet.** Fit piles with a helmet to distribute the hammer blow uniformly and concentrically to the pile top. The helmet surface, contacting the pile, must be planed, smooth and aligned parallel with the hammer base and the pile top. Guide the helmet with leads. Do not allow the helmet to swing freely. Fit the helmet to the pile top to maintain the hammer and pile in concentric alignment.

   For timber piles, do not allow the least inside horizontal dimension of the helmet or hammer base to exceed the pile top diameter by more than 2 inches. Trim the pile top to fit the helmet if the timber pile diameter exceeds the least helmet or hammer base horizontal dimension. Do not trim the pile top below the cutoff elevation.

3. **Pile Cushion.** If CIP concrete piles require redriving after concrete placement and curing inside steel shells, protect pile tops with a pile cushion. Proportion the pile cushion to distribute the blow of the hammer throughout the cross-section of the pile.

4. **Leads.** Use pile driving leads that align the pile and hammer in positions throughout the driving operation. Use leads constructed to allow free movement of the hammer and maintain hammer and pile alignment to ensure concentric impact. Use leads designed to allow alignment of battered piles, if required. Do not allow the driven pile section to extend above leads.

   Provide fixed or swinging type leads. Fit swinging leads with a pile gate at the bottom of the leads. Use leads embedded in the ground or constrain the pile in a structural frame to maintain alignment. Provide leads with a length that eliminates the need for a follower.

5. **Followers.** Use followers only if the Engineer approves in writing, or required by the contract. If the Engineer does not perform a wave equation analysis, use a follower with impedance from 50 percent to 200 percent of the pile impedance.

Maintain the follower and pile in alignment during driving. Drive the first pile, and every tenth pile full length without a follower to ensure pile penetration develops the required nominal pile driving resistance. Use a follower constructed of material and dimensions to allow pile driving to the penetration depth determined by driving the full-length piles. Verify the final position and alignment of the first two piles in each substructure unit, installed with followers meeting location tolerances specified in subsection 705.03.C.2.e, before installing additional piles.

6. **Spuds.** Do not use spuds instead of preboring.

C. **Driving Methods.**

1. **Preparation for Driving.** Before driving, cut pile tops square with the axis of the pile. Use collars, bands, or other devices to protect timber piles against splitting and brooming. Construct lifting holes as detailed in the contract. Do not drive piles within a radius of 25 feet of newly placed concrete until the concrete attains at least 70 percent of its required minimum 28-day flexural or compressive strength.

   a. **Excavation and Fill.** Do not drive or redrive piles until completion of excavation, fill, or both, unless otherwise required. If piles require driving or redriving through fills, compact the embankment to the bottom of the concrete substructure unit before driving piles. Remove material forced up between the piles to the required elevation before placing concrete foundation.

   b. **Pile Preboring to Facilitate Driving**. Prebore holes to the prebore elevation shown on the plans. Provide a finished hole with a diameter equal to or no more than 6 inches greater than the diameter of the pile.

      Maintain a stable, open hole to the bottom of the bore until pile installation. Do not begin final drive for bearing until the pile reaches the prebore elevation shown on the plans. Control caving or unstable soil layers using temporary casing or non-toxic and non-hazardous drilling slurry. Handle and dispose of drilling slurry on the project, or at an off-site location where structures will be unaffected, in accordance with Part 91 Soil Erosion and Sedimentation Control, MCL 324.91101, et seq. Obtain the Engineer's approval for on-site disposal.

      Remove or clear boulders, cobbles, or other obstructions. Provide rock chisels, extractors, core barrels, or other equipment to clear obstructions.

      To the extent possible, complete preboring in a foundation unit and advance piles to the prebore elevation, before beginning the final drive. If preboring within 20 feet of a completed pile, recheck the pile capacity by redriving the pile. The Engineer will select the piles for redrive. Redrive with the same driving equipment from the initial installation. If a reduction in capacity occurs, redrive piles to the nominal pile driving resistance.

Backfill voids after the final drive with granular material Class II or a Department-approved equal.

Prebore pile holes within ¼ inch per foot from the vertical or batter line shown on the plans. Upon completion, the center of the hole at cutoff elevation must be within 6 inches of the position shown on the plans.

If driving piles through compacted fill deeper than 5 feet, drive piles in holes prebored to natural ground unless otherwise shown on the plans.

2. **Driving.** During driving, maintain pile tops square with the axis of the pile.

   a. **Obstructions.** If an impenetrable obstruction is encountered during pile driving, remove and reuse the pile, or cut the pile off and drive a new pile. Reusing the pile is subject to approval by the Engineer. If cutting off the pile, cut the pile at the lowest possible elevation.

      Adjust the pile laterally, and drive in accordance with subsection 705.03.C.2. If adjusting the pile laterally does not bypass the obstruction, remove the obstruction. Provide rock chisels, extractors, core barrels, or other equipment to clear obstructions.

   b. **Penetration.** For design pile lengths, install piles to the design pile tip elevation shown on the plans, unless driving operations attain absolute refusal.

      If the plans show the estimated pile length, install piles to a penetration that meets the following:

      i. The nominal pile driving resistance equals at least the required nominal pile driving resistance shown on the plans; and

      ii. The bottom of the pile is at or below the minimum pile penetration elevation shown on the plans.

         Do not drive piles past absolute refusal unless dynamic testing is required. If dynamic testing is required, pile stresses must not exceed the stresses specified in Table 705-1, as determined by the Engineer.

   c. **Test Piles.** If test piles are required by the contract, use the pile lengths shown on the plans for estimating purposes. Provide actual pile lengths to achieve the required nominal pile driving resistance and minimum pile length. If test piles are not required, provide the piles in accordance with the design pile length shown on the plans.

      Complete the excavation or embankment to within 2 feet of the proposed grade at test pile locations. Install test piles at locations shown on the plans with approved impact hammer

equipment. Drive test piles to the minimum pile length or practical refusal, whichever is greater.

The Engineer will prepare a record of test pile driving, including the number of hammer blows per foot for the driven length, the as-driven length of the test pile, cutoff elevation, penetration in ground, and other pertinent information.

Cut off test piles, driven in production pile locations and incorporated in the structure as permanent piles. Cut off or pull test piles, not driven in production pile locations, as directed by the Engineer.

Provide CIP pile shell and steel H-pile lengths to obtain the required nominal pile driving resistance and penetration.

The Engineer will evaluate test pile results and determine the ordered pile lengths for timber piles.

Test piles are not required if the plans show a design pile length.

d. **Pile Splicing.** Do not splice timber piles.

Provide steel piles in full length sections or splice sections together as shown on the plans, and approved by the Engineer, as required to obtain the required nominal pile driving resistance and penetration. Furnished pile up to 40 feet in length must not contain more than 3 shop or field splices. Furnished pile in excess of 40 feet in length must not contain more than 4 shop or field splices. The Department reserves the right to conduct ultrasonic testing (UT) or any other nondestructive testing (NDT) on shop or field welded splices.

i. **Main Member Piles.** The plans will designate which piles are considered main members. Weld pile splices in accordance with the AASHTO/AWS D1.5 – *Bridge Welding Code* (AWS D1.5) as modified herein. Complete and submit MDOT Form 0395 to the Engineer for review and approval prior to welding.

Give 14 calendar days of notice to the Engineer before beginning pile shop welding. Submit, to the Engineer, a visual test (VT) report from an AWS Certified Welding Inspector (CWI) assuring all welds meet the contract.

ii. **Non-Main Member Piles.** Weld pile splices in accordance with the AWS D1.1, *Structural Welding Code – Steel* (AWS D1.1) except as modified herein. Complete and submit MDOT Form 5627 to the Engineer for review and approval prior to welding.

If piling is to be shop welded, give 14 calendar days of notice to the Engineer before beginning shop welding. Submit, to the Engineer, a visual test (VT) report from an AWS Certified Welding Inspector (CWI) assuring all welds meet the contract.

iii. **Welder Endorsements.** Welding personnel such as welders, welding operators, and tack welders must be qualified in accordance with AWS D1.5 for main member pile welding and AWS D1.1 for non-main member pile welding. Testing is required in accordance with the MDOT *Welder Qualification Program* for main member welding and must be witnessed by the Engineer. Testing is required in accordance with the MDOT *Welder Certification Program* for non-main member welding. Welder performance endorsements from other agencies will not be accepted.

The period of effectiveness for shop welding personnel is three years unless welding personnel are not engaged in a welding process for at least six months or a specific reason exists to question the welder's ability. The period of effectiveness for field welding personnel is two years unless welding personnel are not engaged in a welding process for at least six months or a specific reason exists to question the welder's ability. The Engineer may require a confirming performance test during the progress of the work.

iv. **Welding Requirements.** Perform pile main member and non-main member welding in accordance with AWS D1.5 and AWS D1.1, respectively. Weld using the shielded metal arc welding (SMAW) process using E7015, E7016, or E7018 electrodes. Do not use gas metal arc welding (GMAW) or other gas shielded processes. The Engineer may the approve the submerged arc welding (SAW) process.

Prepare pile base metal for welding in accordance with Clause 3 of AWS D1.5 for main members or Clause 5 of AWS D1.1 for non-main members. Surfaces and edges to be welded must be smooth, uniform, and free from fins, tears, cracks, scale, slag, rust, moisture, grease, foreign material, and other discontinuities that would prevent proper welding. Grind joints before welding to remove pitting and irregularities.

When pile splice plates are allowed by the contract, bring the splice plates into as close contact as practical. If the separation between the pile section and splice plate exceeds $\frac{1}{16}$ inch then increase the fillet weld leg equal to the joint root opening. Do not weld if the joint root opening exceeds $\frac{3}{16}$ inch. Misalignment of pile splice plates or lack of full bearing contact for partial joint penetration groove welds requires approval of the Engineer.

Smoothly transition weld profiles by grinding stop-start areas or other irregularities.

Do not perform pile welding when the ambient temperature is below 0 °F or during periods of precipitation (rain, snow, or fog), unless heating and housing the area as approved by the Engineer. When the ambient temperature is below 32 °F, preheat the pile metal a minimum distance of 3 inches in all directions from the weld joint to a minimum of 70 °F and maintain the temperature during welding.

Store and use filler metal for main member pile welding and non-main member pile welding in accordance with AWS D1.5 and AWS D1.1, respectively. Dry all electrodes in an oven at a temperature of at least 500 °F for at least 2 hours before use unless from a hermetically sealed container. Store the electrodes in a hot box at a temperature of at least 250 °F after drying. Use electrodes within 2 hours of exposure to the atmosphere or redry as described above. Do not redry electrodes more than once. Do not use electrodes that have been wet.

v. **Main Member Weld Testing.** Perform NDT on all shop and field welds and any associated weld repairs in accordance with subsection 707.03.E.7.e. The Engineer must witness testing.

vi. **Non-Main Member Weld Testing.** Remove slag from all weld passes including finished welds prior to inspection. Ensure the surface of welded joints are sufficiently uniform, surface should not be coarse or contain, ripples, sharp corners, interpass valleys, underfill or undercut. Welds must not contain cracks, lack of fusion, excessive porosity, or lack of penetration. Verify fillet weld size using a fillet weld gage.

Repair cracked welds or welds the Engineer determines are unacceptable. Repair welds in accordance with AWS D1.1. Grind all arc strikes and tack welds to base metal. Do not peen welds. Repair unacceptable welds at no additional cost to the Department.

NDT of pile welds will be determined by the Engineer if VT does not result in an acceptable weld. NDT must be performed in accordance with AWS D1.1 by personnel certified as Level II in accordance with ASNT Recommended Practice No. SNT-TC-1A. Blast clean or grind welds before the NDT can be performed. The Engineer will determine the frequency, location, and type of NDT to be performed for each weld. Generally, liquid dye penetrant testing (PT) or magnetic particle testing (MT) is performed for fillet and partial penetration butt welds, whereas UT is performed for complete joint penetration (CJP) butt welds. The Engineer may perform additional NDT of any or all welds in accordance with AWS D1.1. All costs associated with performing NDT will be paid by the Department if initial testing indicates an acceptable weld. If testing identifies defects warranting rejection, repair the welds and hire qualified NDT personnel to retest the welds until the welds are acceptable to the Engineer. All costs associated with performing the initial test, weld repairs and retests of unacceptable welds will be at no additional cost to the Department. No additional compensation will be granted for delays, down-time, or idle equipment and labor for NDT of pile welds.

PT CJP groove weld terminations if cope holes are used at the web flange juncture. Perform PT in accordance with ASTM E165/E165M.

e. **Accuracy.** Drive piles for foundation work within ¼ inch per foot from the vertical or batter line shown on the plans. After driving, the position of each pile at the cutoff elevation must be within 6 inches of the position shown on the plans. The distance between the edges of piles and the outline of the superimposed concrete must be at least 9 inches.

Drive pile bents to allow the adjustment of piles to the positions and elevations shown on the plans without damaging or overstressing piles. Do not pull laterally on piles to correct misalignment, or splice an aligned section on a misaligned section.

Drive timber piles to allow adjustment to the position shown on the plans at the elevation of cap or wale, without damaging or overstressing piles. Draw and hold piles requiring capping, in position before cutoff. If the pile cutoff diameter is greater than the width of the cap, trim the pile to eliminate horizontal projections outside the cap.

Do not drive timber piles to the exact grade shown on the plans; cut them off below the tapered head to provide an unfractured bearing with a full cross section of the pile.

Increase pile cap dimensions or reinforcing to accommodate out-of-position piles at no additional cost to the Department.

f. **Redriving of Heaved Piles.** At the start of pile driving operations, the Engineer will make level readings to measure pile heave after driving until the Engineer determines checking is no longer required. If piles heave up during driving adjacent piles, redrive heaved up piles to the required bearing capacity or penetration. Adjust upheaval or settlement of material between the piles to the correct elevation before placing concrete for the foundation.

If the Engineer detects pile heave for CIP concrete pile shells filled with concrete, redrive the piles to the original position after concrete obtains the required strength using a pile cushion system, approved by the Engineer.

D. **Determination of Nominal Pile Resistance.**

1. **Static Load Test.** Perform load tests as required by the contract.

2. **Dynamic Formula.** Do not use the dynamic formula to install production piles with a required nominal pile driving resistance greater than 600 kips, or if the contract requires dynamic testing with signal matching. Do not use the dynamic formula for pile restrikes.

The Engineer will determine the nominal pile driving resistance for test piles using the same method specified for production piles.

$$R_{ndr} = 1.75\sqrt{E_d}\log_{10}(10N_b) - 100 \qquad \text{Formula 705-3}$$

Where:

N_b = Number of hammer blows per inch of pile penetration;
E_d = Energy developed by the hammer per blow in foot-pounds; and
R_{ndr} = Nominal pile driving resistance measure during pile driving in kips.

The Engineer will determine the value of "E_d". For piles driven on a batter, multiply the value of "E_d" by the hammer energy reduction coefficient "U" as follows:

$$U = \sin(\alpha)\, 0.975 \qquad \text{Formula 705-4}$$

$$\alpha = \tan^{-1}(m) \qquad \text{Formula 705-5}$$

Where:

U = Hammer energy reduction coefficient, less than unity;
α = Angle of batter from horizontal (less than 90 degrees for battered piles); and
m = Vertical component of batter.

For drop, single acting air hammers, and open type diesel hammers, the Engineer will measure the ram velocity using the kinetic energy. If measuring ram velocity is not possible, the Engineer may approximate the velocity using the potential energy calculated by multiplying the weight of hammer striking parts by the observed fall or stroke height.

For double acting air hammers and closed type diesel hammers, the Engineer will calculate the energy using ram weight and bounce chamber pressure. Submit hammer literature and correlation charts to the Engineer to determine the hammer energy of each blow. The Engineer will reduce the calculated value of "E_d" for battered piles by the hammer energy reduction coefficient "U" before calculating the nominal pile driving resistance.

For piles driven with a drop hammer, Formula 705-3, Formula 705-4, and Formula 705-5 are applicable under the following conditions:

a. Hammers have an unrestricted free fall;
b. Pile tops are not broomed, crushed, or splintered;
c. The hammer exhibits no appreciable bounce after striking the pile; and
d. Penetration is at a uniform or uniformly decreasing rate.

If required, or if using a hydraulic hammer, the Engineer will determine the nominal pile driving resistance using the results of a wave equation analysis. The Engineer will consider the hammer driving system, site-specific subsurface data, and project pile geometry, to develop driving criteria that will not overstress the pile and indicate the nominal pile driving resistance.

3. **Dynamic Testing and Analysis.** Perform dynamic testing with signal matching as required by the contract.

E. **Defective Piles.** Protect piles from splitting, splintering and brooming of the wood, or excessive deformation of the steel. Do not manipulate piles to force them into position using excessive force, as determined by the Engineer.

At no additional cost to the Department, use one of the following methods to correct piles damaged by internal defects, improper driving, driving below the cutoff elevation, or piles driven outside the required location:

1. Remove the pile and replace with a new, longer pile;
2. Drive a second pile adjacent to the defective pile; or
3. For steel and CIP concrete piles, splice or build up the pile or extend a portion of the footing to properly embed the pile.

F. **Placing Concrete in CIP Concrete Piles.** Before placing concrete, inspect piles to confirm the full pile length and dry bottom condition. Provide a mirror or light to the Engineer for inspection.

Do not place concrete in piles until after driving, redriving, cleaning, and obtaining the Engineer's acceptance of pile shells within a radius of 20 feet. Place the concrete in the pile shells to the cutoff elevation as soon as practical after driving.

Place concrete in accordance with subsection 706.03.H, except concrete may free-fall more than 5 feet. During placement, vibrate the concrete in the upper ⅓ of the pile shell, to a depth no greater than 25 feet, without causing segregation.

G. **Protective Coating for Steel Piles and CIP Concrete Piles.** If required, galvanize steel H-piles and steel shells exposed to air or water in the finished structure, in accordance with ASTM A123/A123M.

Do not use corrosive embankment material within 30 feet of piles. Repair damage to galvanization in accordance with subsection 716.03.E at no additional cost to the Department.

H. **Cleaning Steel Piles and Steel Pile Shells.** If embedding steel piles or pile shells in structural concrete, exclusive of tremie concrete, clean dirt and loose scale from the portion requiring embedding.

I. **Pile Cutoff.** Cut off piles as shown on the plans and within 1 inch of the elevation required and anchor to the structure as required by the contract.

Take possession of piling cutoff lengths. Dispose of cutoff lengths in accordance with local, state, and federal regulations.

Cut off timber piles to completely remove material damaged by driving.

J. **Pile Protection.** Provide pile protection where the plans require it by utilizing one of the following methods:

1. Prime the piling and uniformly coat with asphalt. Heat the asphalt between 200 °F and 300 °F and apply by one or more mop coats or other approved means to obtain a uniform minimum coating thickness of ¼ inch. Continuously coat the pile from the bottom of excavation to the bottom of concrete pile cap as designated on the plans.

2. Wrap piles with the extruded corrugated polypropylene sheet material. Cover all exposed surfaces. Install panels with a minimum of a 2-inch (shingle style) overlap or as approved by the Engineer. Attach sheets to the pilling according to the manufacturer's recommendations.

705.04. Measurement and Payment.

Pay Item	**Pay Unit**
Pile, Treated Timber, Furn	Foot
Pile, Treated Timber, Driven	Foot
Pile, CIP Conc, Furn and Driven, __ inch	Foot
Pile, Steel, Furn and Driven, __ inch	Foot
Pile, Galv (Structure Identification)	Lump Sum
Test Pile, Treated Timber	Each
Test Pile, CIP Conc, __ inch	Each
Test Pile, Steel, __ inch	Each
Pile Point, CIP Conc	Each
Pile Point, Steel	Each
Pile, Steel, Splice	Each
Prebore, Fdn Piling	Foot
Pile Driving Equipment, Furn (Structure Identification)	Lump Sum
Pile Protection	Foot

All cost associated with shop or field welder endorsement to the MDOT Welder Qualification Program testing including, but not limited to providing the specimen test plates, performing completing performance testing, and submittal of qualification specimen will be at the Contractor's expense.

A. **Piles.**

1. **Driven Piles.** The unit prices for **Pile, CIP Conc, Furn and Driven, __ inch**, and **Pile, Steel, Furn and Driven, __ inch**, include the cost of redrive due to preboring.

For piles removed, adjusted, and reused due to obstructions, the Engineer will measure the total length of the pile driven, including the length of pile embedded in the ground and removed. For piles that require cutting off due to obstructions, the Engineer will measure the total length of the new pile driven, including the length of obstructed pile cut off and left in the ground.

The Department will pay for redriving heaved piles as extra work.

The Engineer will measure **Pile, Treated Timber, Driven** by the piling length left in place below cutoff. The unit price for **Pile, Treated Timber, Driven** includes the cost of cutting off piles. Cutoff material will remain the property of the Contractor.

The Engineer will measure **Pile, CIP Conc, Furn and Driven**, and **Pile, Steel, Furn and Driven**, by the length of piling left in place below cutoff.

The unit prices for **Pile, CIP Conc, Furn and Driven**, and **Pile, Steel, Furn and Driven** include the cost of providing ungalvanized pile shells or steel piles, and the cost of driving the galvanized pile length.

The unit price for **Pile, CIP Conc, Furn and Driven** includes the cost of furnishing and installing steel end plate as detailed on the plans.

The unit prices for **Pile, CIP Conc, Furn and Driven**, and **Pile, Steel, Furn and Driven** do not include the cost of the length of the pile point extending beyond the pile.

2. **Pile, Treated Timber, Furnished.** The Department will pay for **Pile, Treated Timber, Furn**, at the ordered pile length.

3. **Galvanized Piles.** The unit price for **Pile, Galv**, includes the cost associated with galvanizing the required length of pile as shown on the plans.

4. **Pile Driving Equipment.** The Engineer will measure **Pile Driving Equipment, Furn** as a unit for each structure. The unit price for **Pile Driving Equipment, Furn**, includes the cost of providing and removing equipment for driving piles.

   The unit price for the length of pile driven includes the cost of operating equipment for driving piles.

5. **Prebore Foundation Piling.** The Engineer will measure **Prebore, Fdn Piling**, from the bottom of the foundation to the prebore elevation shown on the plans. The unit price for **Prebore, Fdn Piling** includes the cost of the following:

   a. Boring pile holes;
   b. Disposing of excavated material;

c. Backfilling voids;
d. Installing and removing temporary casings;
e. Providing and disposing of drilling slurry;
f. Redriving completed piles within a radius of 20 feet; and
g. Equipment operating costs.

If **Prebore, Fdn Piling**, is shown on the plans, the unit price for **Pile Driving Equipment, Furn** includes the cost of providing equipment for prebore. If the plans do not show preboring, but the Engineer authorizes preboring in writing, the Department will pay for providing equipment as extra work.

6. **Pile Points.** If the contract includes the pay item **Pile Points** for a specific structure, the Department will pay separately for **Pile Points**, of the type required for that structure. If the plans do not include **Pile Points** for a specific structure, but the Engineer requires pile points, the Department will pay for pile points as extra work for that structure.

7. **Test Piles.** The Department will pay for test piles in addition to the contract unit prices for furnished and driven pile pay items.

8. **Pile, Steel, Splice.** The unit price for **Pile, Steel, Splice**, includes the cost to splice and inspect steel H and CIP piles. The Engineer will measure and the Department will pay for each pile splice completed below the pile cutoff, but not to exceed the number of splices shown in Table 705-3.

Table 705-3
Maximum Number of Splices Measured Per Pile Length

Pile Length (L) Installed Below Cutoff (ft)	Number of Splices
L ≤ 50	0
50 < L ≤ 100	1
100 < L ≤ 150	2
150 < L ≤ 200	3
200 < L ≤ 250	4

Payment for splices of piles considered to be main members includes the cost of the required NDT for acceptance in accordance with AWS D1.5.

9. **Pile Protection.** **Pile Protection** will be measured in feet along the exposed length of individual H-piles from the bottom of excavation to the bottom of footing elevation unless otherwise specified on the plans.

B. **Obstruction Removal.** The Engineer will measure and the Department will pay for the removal of obstructions, which require the use of special equipment or tools specified in subsection 705.03.C.2.a, at the unit price for **Obstruction Removal**, in accordance with subsection 718.04.D.

Section 706. STRUCTURAL CONCRETE CONSTRUCTION

706.01. Description. This work consists of constructing concrete portions of bridges, box and slab culverts, headwalls, parapets, wingwalls, retaining walls, and other structures, and providing and installing electrical grounding systems.

706.02. Materials. Provide materials in accordance with the following:

Curing Materials 903
Insulating Blankets 903
Polystyrene Insulation 903
Steel Reinforcement 905
Bar Chairs and Wire Ties 905
Structural Steel 906
Miscellaneous Metal Products 908
Geosynthetics 910
Water 911
Fiber Joint Filler for Concrete Construction 914
Joint Sealants for Concrete Construction 914
Conduit 918
Electrical Grounding System 918
Concrete, Grades 3500, 3500HP, 4500, 4500HP 1004
Mortar and Grout 1005

Provide Grade 3500 concrete for structure concrete placed under water. Provide slump for these tremie applications in accordance with Table 1004-1.

Provide Grade 3500 concrete for substructure and subfooting concrete.

Provide Grade 3500HP concrete for high performance substructure concrete.

Provide Grade 4500 concrete for superstructure concrete and superstructure concrete, night casting.

Provide Grade 4500HP concrete for high performance superstructure concrete and high performance superstructure concrete, night casting.

Provide natural aggregate and with no greater than 2.50 percent absorption as specified in ASTM C127 for structure concrete. Do not use slag aggregate.

Provide AASHTO M270, Grade 36 steel, meeting the requirements of ASTM A786/A786M, galvanized in accordance with section 716, for expansion joint cover plates. Provide expansion joint devices meeting the requirements of AASHTO M270, Grade 36 or ASTM A588/A588M. Use AASHTO M270, Grade 36 steel cover plates with a slip resistance equal to or greater than the

requirements of ASTM A786/A786M and that meet the approval of the Engineer. Galvanize in accordance with section 716. Provide ASTM F593 (Type 304) stainless steel, flathead countersunk screws with inserts.

Refer to section 1004, Table 1004-1 and the contract for required minimum flexural and compressive strengths of concrete.

Select penetrating water repellant from the Qualified Products List.

706.03. Construction.

A. **Equipment.**

1. **Placing Equipment.** Use equipment with capacity and arrangement for placing concrete in accordance with subsection 706.03.H. Make equipment available to the Engineer for inspection, testing, and approval before use.

   Use a tremie, pump, or other Engineer-approved equipment for placing concrete under water.

   If placing concrete with a tremie, provide a tremie with a capacity of at least 7 cubic feet, and with a watertight discharge tube at least 10 inches in diameter. Equip the lower end of the tremie with a valve or suitable device capable of closing tightly while charging and lowering the tremie into position, and opening fully in the lowered position.

   If pumping concrete, provide a pump discharge, pipe, and fittings with an inside diameter of at least 4 inches. Do not use aluminum pipe for conveying or placing concrete.

2. **Bridge Deck Finishing Equipment.** Use a self-propelled, transverse finishing machine capable of finishing concrete from curb line to curb line or from curb line to bulkhead. Equip bridge deck finishing machines with rotating finishing cylinder(s), auger(s), drag float, and other structural and mechanical equipment to finish the concrete within the required tolerances.

   Use a machine or supporting frame to transversely span the cast section and travel in the direction of concrete placement. Mount the machine on wheels operated on longitudinal rails capable of carrying the loads between supports with a deflection no greater than $\frac{1}{16}$ inch. Mount rails on adjustable supports that prevent deflection under the machine load. Use rail sections, straight within $\frac{1}{8}$ inch per foot, and rail grades that differ from the required screed grade by no more than $\frac{1}{16}$ inch. Install the rail at a height above the surface allowing hand floating under the rails.

   Place rail supports over beams unless approved by the Engineer. Design falsework supporting rails in accordance with 706.03.C. Use portable, lightweight, or wheeled work

bridges capable of transversely spanning the cast section to transversely finish machine-finished deck sections.

Use a 3-foot, lightweight metal float and a 10-foot, lightweight, rigid straightedge, each equipped with a suitable handle.

Alternative types of vibrating or oscillating screeds may be used if approved by the Engineer.

3. **Concrete Saws.** Use a self-propelled saw to neatly cut hardened concrete to the line and depth required.

4. **Texturing Equipment.** Use texturing equipment to produce uniform transverse grooves of the required width, depth, and spacing.

5. **Equipment for Applying Penetrating Water Repellent Material.** Apply penetrating water repellent material with low pressure, 15 psi to 40 psi, airless-type spray equipment or with long-nap rollers.

6. **Equipment Approval.** Obtain the Engineer's approval for all equipment and tools for placing and finishing of concrete before starting work including, but not limited to, pumping equipment, air compressors, vibrators, joint sealing equipment, straightedges, and finishing tools.

B. **False Decking.** Construct false decking to the limits shown on the plans.

Construct false decking capable of supporting all material and debris falling from the deck. Abut false decking pieces to prevent material or debris from falling through. Use a false decking system that does not damage beams and meets the approval of the Engineer.

Install false decking after erecting structural steel or precast concrete beams, or before beginning deck removal, repair, or other bridge construction activities. Do not construct false decking systems over traffic that project below beam bottom flanges. Maintain false decking to prevent hazards to vehicular, pedestrian, or waterway traffic. Remove material or debris on the flooring outside the fascia at least once per day. Leave false decking in place until completion of construction activity, as directed by the Engineer.

For bridges over waterways, barges may be used in the waterway in place of constructing a false decking system. Position the barge in the waterway after erecting the structural steel or precast concrete beams, or before beginning deck removal, deck repair, or bridge construction activities. Maintain the barge to prevent hazards or impediments to waterway traffic. Provide a barge large enough to support material and debris falling from the deck. Leave the barge in place until the bridge deck over the waterway is cast. If the Engineer determines the barge is ineffective in preventing falling material and debris from entering the waterway, replace it with a conventional false decking system at no additional cost to the Department.

C. **Falsework.** Design, construct, place, and remove temporary supports required for constructing the permanent structure. Weld falsework supports in accordance with subsections 707.03.E.7.b,c,d, and g. Do not weld to the structural steel or use mechanical fasteners that damage the structural steel or coatings.

Submit working drawings and design calculations for falsework if required by the contract. Submit working drawings and calculations in accordance with subsection 104.02 a minimum of 14 days prior to beginning installation. The working drawings and design calculations must be sealed by a professional engineer licensed in the state of Michigan. Do not place concrete prior to securing the Engineer's approval of the working drawings and calculations.

Correct settlement in the falsework during loading.

D. **Forming.**

1. **General.** Construct forms true to the lines shown on the plans. Construct mortar-tight forms with net sections capable of withstanding impacts during placement and of supporting the weight of concrete through curing. Use falsework for forms in accordance with subsection 706.03.C.

   Deck forms or supports are not allowed to protrude above the top of haunches or above the bottom of the deck.

2. **Vertical Clearance.** The Department defines minimum vertical clearance as the minimum vertical distance from any point on the roadbed surface, including 24 inches either side of the roadbed, to the low beam.

   Over active roadbeds, maintain formwork above the bottom of beams. Obtain the Engineer's approval if form work must extend below the bottom of beams. Provide and place advance-warning signs at locations directed by the Engineer before changing the existing structure vertical clearance. Provide 14 days for the Engineer to determine locations for the advance warning signs.

3. **Removable Forms.**

   a. **Type A Surface.** Type A surfaces are exposed surfaces of piers, abutments, wingwalls, retaining walls; and the outside faces of girders, T beams, slabs, columns, brackets, curbs, headwalls, barriers, railings, arch rings, spandrel walls, and parapets.

      Use metal forms or 5-ply structural grade western fir plywood for face forming material. If the grain of three plies of the plywood runs perpendicular to the studs, the $^{25}/_{32}$-inch thickness meets 1-inch nominal thickness.

The Engineer will allow dressed shiplap or square edged lumber, sized four sides, at least ¾ inch thick, covered by form lining, instead of structural plywood for form lumber. Use metal, composition, or plywood form lining for shiplap or square edged lumber. Use composition or plywood lining at least ¼ inch thick.

The Engineer will evaluate the sizing, spacing, and dimensions of metal, composition, or special plywood forms, and may allow continued use based on performance.

The Engineer may modify the requirements for pattern and minimum lumber thickness for curved Type A surfaces. The inside faces of forms for Type A surfaces must be free of holes, irregularities, and unevenness.

b. **Type B Surface.** Type B surfaces are formed concrete surfaces that will not be exposed in the finished work; the bottoms of floor slabs and sidewalk; the sides of interior beams and girders; backwalls above the bridge seat; and exposed surfaces not included in Type A surfaces.

Use metal forms or face forming material at least ¾ inch thick for Type B surfaces.

Material allowed for Type A surfaces may be used for Type B surfaces, except do not use square edge lumber for forming horizontal surfaces. Form lining is not required for shiplap and square edge lumber.

c. **Type A and B Surfaces.** Do not use forms and face form material with defects for Type A or Type B surfaces.

For Type A surfaces, space studs no greater than 12 inches center-to-center. For Type B surfaces, space studs no greater than 24 inches center-to-center. Provide nominal 2 inch by 6 inch or nominal 4 inch by 4 inch sections, except nominal 2 inch by 4 inch studs are allowed for pour heights not exceeding 3½ feet. Cap studs with a straight top plate at least the size of the Engineer-approved studs.

Scab all joints in plates 4 feet each way to provide continuity.

Constructed forms must remain true to shape. Countersink bolts and rivet heads on the inside face of the forms.

Design clamps, pins, or other connecting devices to hold forms rigidly together and allow removal without damage to the concrete. Do not use metal forms that do not present a smooth surface or that do not line up properly. Maintain metal forms free of rust, grease, and other material that may discolor concrete.

Scab wales to prevent distortion during concrete placement and curing. Place a row of wales within 6 inches of the bottom of each pour, unless studs extend below the bottom of the pour secured by wales fastened to rods in the previous pour.

d. **Construction.** Brace forms to prevent movement during concrete placement. Do not use mechanical or adhesive methods to secure forms to concrete bridge decks or pavements, which will be exposed in the completed work. Finish corners square, without moldings. For exposed concrete faces, saw the form edges at corners square and straight, and place them to form a tight fit. Form chamfered corners with dimensions measured on the sides.

For Type A surfaces, arrange the forms to present a neat geometric pattern of form marks. Do not offset or shift patterns. Construct forms to allow removal without damaging concrete.

e. **Ties and Spreaders.** Do not use wire ties and pipe spreaders.

After removing forms, remove the ends of metal appliances inside the forms to maintain correct alignment. Remove ends to a depth of at least 1 inch from the surface of the concrete without creating an opening greater than 1½ inches in diameter. Remove metal or wooden spreaders, which are separate from form ties, during concrete placement.

f. **Form Surface Treatment.** Treat the inside of forms with a release agent that will not discolor or adversely affect the concrete. Do not allow the release agent to contact steel reinforcement or existing concrete or steel surfaces.

4. **Permanent Metal Deck Forms**.

a. **Materials and Fabrication.** Provide corrugated forms and supports fabricated from steel sheet conforming to ASTM A653/A653M and galvanized to a G210 coating designation. Provide fasteners galvanized in accordance with AASHTO M 232. Fabricate permanent metal deck forms, supports, and accessories in accordance with section 707.

b. **Design.** Verify beam dimensions before fabricating permanent metal deck forms.

Design forms, form supports, and attachments to carry a 50 pound per square foot construction load, all dead loads, and resultant horizontal loads due to forming of cantilever overhangs. Consider the span length to be the clear span of the form plus 2 inches, measured parallel to the form flutes. Consider the full deck slab thickness shown on the plans to be above the corrugations. Design forms for a maximum deflection of ¼ inch or $1/180$ of the form span length, whichever is less. Do not use form camber to compensate for deflection greater than the limits specified.

Use unit working stresses no greater than 0.725 of the specified yield strength of the steel, or 36,000 pounds per square inch, whichever is less.

Submit working drawings and calculations for permanent metal deck forms, supports and connections in accordance with subsection 104.02 a minimum of 14 days prior to beginning installation. The working drawings and design calculations must be sealed by a professional engineer licensed in the state of Michigan.

c. **Construction.** Do not use metal forms below longitudinal or transverse open joints, or expansion type joints.

Do not allow form sheets to rest directly on beam flanges. Center each sheet in the bay and provide a bearing length of at least 1 inch at each end. Attach sheets promptly to avoid hazards that may result from lateral movement or sudden uplift of the forms. Provide safety stops where necessary.

Make attachments using bolts, clips, or other Department-approved methods. Attach forms to supports using sheet metal screws, or other Department-approved fasteners, from the top side where practical. Do not weld forms or accessories to structural steel. Size support straps such that welds terminate a minimum of ¼ inch from the edge of the strap. Do not flame cut metal deck forms or supports. Repair of galvanized areas at welds or unbolted edges after shearing or punching is not required.

Field drill ¼-inch diameter weep holes, at spacing no greater than 12 inches, along transverse and longitudinal construction joints.

Place and secure polystyrene in corrugations to prevent displacement during concrete placement.

Do not fill corrugations with concrete.

5. **Form Liners for Aesthetic Texturing of Concrete.** Use smooth, custom formed elastomeric or multi-use, acrylonitrile butadiene styrene (ABS) plastic form liners to produce the concrete textures as required in the contract. Single-use, polystyrene or similar plastic liners are prohibited.

Submit shop drawings to the Engineer for approval a minimum of 14 days prior to placing form liners. The shop drawings must detail the form liner pattern and geometry, show the complete pattern layout for the entire limits of textured concrete as required in the contract, and indicate where each of the patterns begin and end. Configure the liner so that the contours do not cause the concrete to be locked into the liner.

Use form release agents that are compatible with the form liners. Provide written certification from the manufacturer that the product is compatible and is non-reacting and non-staining. If form liners are required by the contract, use a single form release agent for the entire project including formed surfaces not required to be textured.

a. **Test Sections**. Construct a test section for each unique texturing pattern and application of pattern before constructing textured portions of permanent concrete. Test sections must demonstrate the quality of the textured concrete including the concrete mix design, quality of forming, joint control, consolidation technique, and fully textured corners. Obtain the Engineer's approval for the location of the test sections.

   If the Engineer determines a test section is not satisfactory, adjust construction techniques, and cast additional test sections until approval from the Engineer has been obtained. The cost of any necessary additional test sections, will be borne by the Contractor.

   Approved test sections will be used by the Engineer as a measure of the quality and finish of the permanent textured concrete.

b. **Placing Forms.** Do not place form liner horizontal splices within the textured area. Carefully match vertical splices. Visible seams or conspicuous form marks are not allowed. Bevel the top and bottom edge of the form liner at a 45 degree angle to produce a ¾-inch bevel where pattern ends.

   Thoroughly clean form liners and cant strips according to the manufacturer's recommendations and to the satisfaction of the Engineer prior to each reuse.

   Handle forms and form liners according to the manufacturer's recommendations for storage, fastening liners to the forms, stripping the lined forms from the concrete, and cleaning and reconditioning liners.

   Damage or wear that affects the finished appearance of the concrete will be cause for rejection and replacement of the liner. All costs associated with replacement of damaged or worn liners will be borne by the Contractor.

   Apply release agent according to the manufacturer's recommendations. Remove excess release agent to prevent staining of the concrete surface.

   Locate form ties at high points of the texturing pattern so they will be in the recess of the concrete. Use form ties designed so that all material can be disengaged and removed without spalling or damaging the concrete. Finish form tie holes according to subsection 706.03.R.1.

c. **Repairs.** Repair or replace textured concrete at no additional cost to the Department that, in the opinion of the Engineer, does not meet the quality and finish of the test section.

E. **Steel Reinforcement.**

1. **Storage and Protection.** Store steel reinforcement on platforms, skids, or other supports. Store steel reinforcement neatly and clearly marked to facilitate inspection. Locate storage sites at water crossing locations above the high water elevation shown on the plans. Store epoxy coated bars on padded wood or steel cribbing, and cover to prevent exposure to ultraviolet rays.

2. **Handling of Epoxy-Coated Reinforcement.** Use systems with padded contact areas for handling coated bars. Pad bundling bands or use other banding to prevent damage to the coating. Lift bundles of coated bars with a strongback, spreader bar, multiple supports, or platform bridges to prevent bar-to-bar abrasion. Do not drop or drag the bars or bundles.

3. **Field Bending.** Do not bend reinforcing bars in the field unless otherwise shown on the plans, or to correct minor errors or omissions in shop bending. Perform field bending cold. Make field bends in accordance with subsection 905.03.A for shop bends. Repair damaged epoxy coating in accordance with subsection 706.03.E.8.

4. **Placing and Fastening.** Accurately place and firmly secure steel reinforcement prior to concrete placement. Steel reinforcement must be free of dirt and excessive rust, loose mill scale, or other deleterious material. Bar spacing must not vary more than ⅙ of the spacing shown on the plans, except as needed to allow placing anchor bolts and position dowels. Do not exceed the bar spacing shown on the plans. Use wire ties to secure all bar intersections for the top mat. Use wire ties to secure all bar intersections for other mats where the product of the length and width of bar intersection spacing exceeds 120 square inches. If the product of the length and the width of spacing does not exceed 120 square inches, tie alternate intersections. Do not weld to steel reinforcement.

   Tie bar laps within 3 inches of each end of the lap.

   For all reinforcement except for deck reinforcement, provide a clear distance from the reinforcement to the concrete surface at least equal to the dimensions shown on the plans, but no more than 25 percent greater than the dimension. For deck reinforcement, do not vary the distance from the top transverse reinforcement to the bottom of the concrete slab by more than ⅜ inch from the dimensions shown on the plans. Provide concrete clear cover over the top transverse reinforcement at least equal to the dimensions shown on the plans.

   Maintain the required reinforcement distances from forms using stays, ties, hangers, bar chairs, or other Department-approved supports, except in bridge superstructures only use bar chairs. If bar chairs are used, they must be plastic or coated metal with a bearing area that prevents penetration into forming material. Use commercial grade concrete brick only in footings.

   For bridge decks, place bar chairs parallel to the beam, spaced with the lines of supports measured from center to center, at the ¼-point and ¾-point for beam spacing less than 9 feet, and at the ⅙ point, ½ point, and ⅚ point for beam spacing 9 feet or greater.

Use additional bar chairs outside the fascia beam to support reinforcing steel along and near the fascia. On concrete box beam bridges without slab ties, use bar chairs along the longitudinal centerline of each beam. Support the upper layer of reinforcement directly over the supports for the lower layer of reinforcement with rows of Department-approved continuous steel bar supports consisting of at least three longitudinal wires.

Tie the upper layer of reinforcing steel to the structural steel, stud shear developers, or other structural components, at intervals no greater than 5 feet along each beam or girder. Use two loops of 16 gauge tie wire for tie-downs. Tie coated reinforcement with coated tie wire to prevent wire from damaging the coating.

Cover epoxy coated reinforcement if the concrete for the element is not cast within two months from the time of placing the epoxy coated reinforcement. Use a cover that will prevent exposure to ultraviolet rays.

5. **Splicing.** Do not splice bars unless otherwise shown on the plans.

6. **Lapping.** Lap bars at locations shown on the plans. Do not eliminate or move laps from the locations shown on the plans without approval from the Engineer.

7. **Cutting Reinforcement.** Saw or shear bars when cutting is permitted. Do not flame cut reinforcing bars.

8. **Repair of Epoxy Coating.** Repair coating damaged by bending, sawing, shearing, or damaged during shipping, unloading, storage, installation, and handling on the project.

   Patch sawed or sheared ends and visible defects in accordance with ASTM A775/A775M. Use a patching or repair material selected from the Qualified Products List. Clean areas requiring patching by removing surface contaminants and damaged coating. Roughen the area requiring patching before applying patching material. Remove rust by dry blast cleaning or power tool cleaning immediately before applying patching material.

   Immediately treat bars in accordance with the patching material manufacturer's recommendations and before oxidation occurs. Overlap patching material onto the original coating by 2 inches, or as recommended by the manufacturer. Provide at least 8 mils of dry film thickness on the patched areas. Replace bars with 5 percent or more damaged area in a 12-inch bar length. Coat mechanical splices after splice installation in the same manner as required for sawed or sheared ends.

F. **Placing Galvanized Metal Pipe Sleeves.** Place galvanized metal pipe sleeves in the bridge to carry utility company facilities across the bridge. The utility company will provide pipe sleeves at the bridge site at no cost to the Contractor. Notify the utility company at least 7 days before the sleeves are needed. If the contract requires the utility company to install conduit or ducts in

the structure, notify the utility company at least 7 days before the utility company is required to install conduit or ducts. The Department will not allow additional compensation for costs associated with delays caused by utility company operations.

G. **Placing Conduit.** Align the conduit, tightly fit the joints, and firmly secure conduit prior to concrete placement. Assemble and protect sleeve expansion joints in the superstructure to allow movement after concrete encasement. Place concrete encasement after the Engineer approves the alignment of, and connection to, the conduit. Swab the conduit for the entire length immediately after casting encasement to remove concrete materials.

H. **Placing Concrete.**

1. **General.** Prepare and test work progress specimens, as necessary, in accordance with section 1002.

   Obtain the Engineer's written approval of forms, bracing, reinforcing steel, and preparations for casting concrete before beginning concrete placement operations. Before placing concrete, clean forms, piling, and reinforcing steel, and remove sawdust, chips, and other debris from the form interior. Concrete placed without the Engineer's approval may be rejected and required to be removed.

   Remove struts, stays, and braces to hold forms in correct shape and alignment when the concrete elevation renders them unnecessary.

   Place concrete to avoid material segregation and reinforcement displacement.

   Complete each pour in a continuous operation with no interruption longer than 45 minutes, except concrete subfootings. Place and consolidate each layer before initial set of the previous layer.

   For concrete subfootings, the Contractor may place vertical construction joints within the subfooting for a substructure unit.

   Do not place additional concrete on finished reinforced substructure concrete until the substructure concrete cures for at least three days and attains at least 70 percent of its required minimum 28-day flexural or compressive design strength.

   Do not use mechanical attachments to support forms until substructure concrete attains at least 70 percent of its required minimum 28-day flexural or compressive strength. The Engineer may lower the concrete strength required for attaching forms after reviewing calculations performed by a professional engineer, licensed in the state of Michigan, showing that forces due to imposed loads will not exceed the capacity of the concrete section based on 70 percent of the concrete strength at the time the loads are applied.

Do not pour deck concrete until diaphragm concrete attains a compressive strength of 70 percent of its required minimum 28-day flexural or compressive strength.

Regulate concrete placement so pressure caused by wet concrete does not exceed the pressure used in designing the forms.

Place the concrete in the forms in layers of suitable thickness, as near the final position as possible. In pier caps and wall sections, place layers no greater than 12 inches thick. The Engineer may modify the layer thickness requirements for wall sections depending on the steel reinforcement spacing.

Place subfooting and tremie concrete to the full depth of the section.

Place footing concrete and column concrete in layers no greater than 36 inches.

For concrete placed by pumping, dispose of water-cement slurry used to lubricate the discharge pipe outside the forms.

Other than subfootings and tremie seals, place and vibrate substructure concrete in the dry.

Do not allow superstructure concrete to freefall more than 12 inches to the top of reinforcing steel. Do not allow concrete to freefall more than 5 feet for other structural applications. If concrete must drop more than 5 feet, place concrete through Department-approved pipes or tremie tubes at least 6 inches in diameter and arranged to avoid concrete segregation. If reinforcing bar spacing prevents the use of a 6 inch tube, loosen the bar ties and spread the bars enough to allow the use of the tremie tube or chute. Reposition and re-tie reinforcing bars before covering with concrete.

Use mechanical, high-frequency internal vibrators, approved by the Engineer, capable of visibly and effectively consolidating the concrete mixture for a radius of at least 18 inches from the tip of the vibrator. If using epoxy coated or other coated reinforcement, use a vibrator with a rubber coated head.

The Engineer may allow concrete consolidation using hand methods if the use of vibratory equipment is not possible.

Use vibrators to consolidate incoming concrete within 15 minutes of placement. Manipulate vibrators to work the concrete around the reinforcement and embedded fixtures, into corners and angles of forms. Vibrate freshly placed concrete at the point of placement. Thoroughly consolidate the concrete, but do not cause segregation.

Move vibrators to prevent forming localized areas of grout. Uniformly space the points of vibration no greater than twice the radius of the visibly effective vibration area. Do not hold

vibrators against forms or reinforcing steel, and do not use them for flowing or spreading concrete. Do not disturb partially hardened concrete.

Do not disturb forms or projecting reinforcement after the initial set of the concrete.

Maintain forms, reinforcing steel, and placing equipment clean and free of hardened concrete. Discharge water used to flush placing equipment away from concrete and forms.

If concreting operations extend into the night, light the work to make operations clearly visible for inspection.

Do not form or cast sidewalk, brush block, or barrier pours until the deck concrete attains its required minimum 7-day flexural or compressive strength, and after completion of the 7-day continuous wet cure.

Do not place heavy equipment on the deck until the deck concrete attains its required minimum 28-day flexural or compressive strength, and after completion of the 7-day continuous wet cure.

2. **Hot Weather Limitations.** Place bridge deck concrete when the rate of evaporation at the site is less than 0.20 psf per hour, in accordance with Figure 706-1.

   Cast concrete only when the temperature of the concrete being placed is below 90 °F.

   Supply Engineer-approved equipment for determining the relative humidity and wind velocity on the project.

3. **Placing Concrete Under Water.** Place concrete under water if shown on the plans. Place concrete under water in a compact mass, in the final position, using a tremie tube or by pumping. Equip the tremie tube so the bottom end closes if concrete does not encase the pipe. Do not use bottom dump buckets. Maintain still water at the point of placement, and provide tight forms. Do not disturb the concrete after placement.

   Support the tremie tube to allow free movement of the discharge end over the entire work surface and to allow rapid raising or lowering to adjust the concrete flow. Place the concrete full depth in one continuous operation, starting from one end of the cofferdam. Always keep the tremie tube in the freshly placed concrete; only withdraw the tremie tube upon completion of each pour, or as required due to foundation piling or cofferdam bracing.

   After withdrawing the tremie tube, recharge it with concrete above water, lower it to the new position, and set the discharge end into freshly placed concrete. During placing operations, maintain the tremie tube full to the bottom of the hopper. After dumping a batch into the hopper, induce the flow of concrete by raising the discharge end of the tremie tube slightly. Do not remove the end of the tremie tube from the concrete.

Remove laitance or other deleterious material without damaging the concrete. Place concrete to at least the elevation of the top of tremie seals, but no more than 6 inches above the seals. Remove excess concrete.

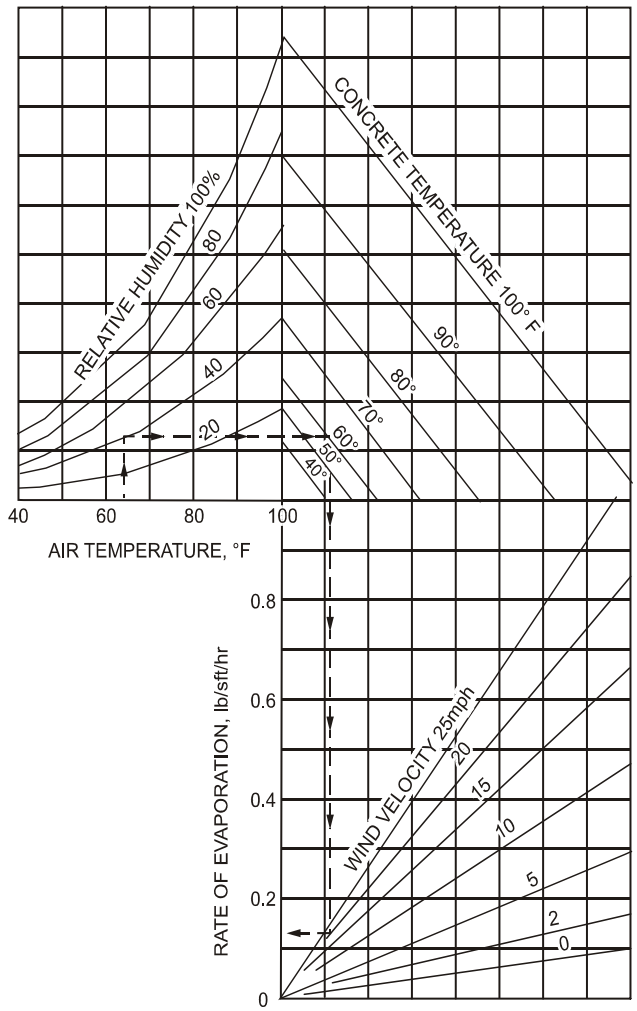

Figure 706-1: Surface Evaporation for Concrete

Estimate the evaporation rate in accordance with the following:

a. Enter the air temperature, measured from 4 feet to 6 feet above the evaporating surface, on the windward side and shielded from the sun;

b. Move up to the line corresponding to the relative humidity;

c. Move right to the line corresponding to the concrete temperature;

d. Move down to the line corresponding to the wind velocity, measured from 18 inches above the evaporating surface;

e. Read the evaporation rate on the scale to the left of this point.

DRAFT – July 2020

Dewater cofferdams after the tremie concrete has been placed and has attained at least 50 percent of its required minimum 28-day compressive strength or after test beams cured in water on top of the tremie concrete break with a flexural strength of at least 325 psi. These strength requirements do not relieve the Contractor of responsibility for failure of any part of the cofferdam.

I. **Nighttime Casting of Superstructure Concrete.**

1. **Construction Methods.** Begin work no earlier than one hour after sunset, or as approved by the Engineer. Complete placement of concrete no later than 1 hour prior to sunrise or as approved by the Engineer. Use the sunset and sunrise times published by the National Weather Service for the proposed date of night casting or the time determined by the Engineer. Coordinate nighttime deck pours with the Engineer to allow scheduling of inspection.

   Comply with the deck pouring sequence and curing requirements shown on the plans. If approved by the Engineer, the Contractor may consecutively pour areas shown on the plans for simultaneous pour, the same night, using retarder in the first pour to prevent initial set until completion of the second pour. Submit any changes to the pour sequence to the Engineer for approval a minimum of 7 days prior to placing concrete.

2. **Lighting Requirements.** Use light sources to achieve a minimum average intensity of 10 foot-candles over the entire work area, including the concrete testing area. Submit the deck lighting scheme to the Engineer for approval. Provide a lighting alignment that does not interfere with or impede traffic on open roadways. Refer to subsection 812.03.H for additional lighting requirements for night work.

J. **Cold Weather Precautions.** Protect concrete to prevent damage from cold weather. Remove and replace frozen concrete or concrete damaged by cold weather at no additional cost to the Department.

If the National Weather Service forecasts that air temperatures will remain below 50 °F, but above 40 °F, apply ordinary protection requirements to protect concrete.

If the National Weather Service forecasts air temperatures below 40 °F during the curing period, apply low temperature protection requirements to protect concrete.

Cure concrete in accordance with subsection 706.03.N.1, except only one application of curing compound is required.

1. **Ordinary Protection.** Ordinary protection consists of using tarpaulins, straw covering, or other Engineer-approved methods to protect concrete. If the prevailing temperatures will produce concrete temperature less than 45 °F, raise the concrete temperature in accordance with subsection 1001.03.E.5.

Seal keyways, anchor bolt wells, or other depressions on exposed horizontal surfaces against water intrusion.

If approved by the Engineer, protect footings by completely submerging them under water inside the cofferdam area 2 hours after placement. After submersion, maintain water level necessary to cover the concrete, and keep ice from contacting the concrete.

2. **Low Temperature Protection.** Low temperature protection consists of using insulated forms or heating and housing to protect concrete. Place concrete in the forms at temperatures specified in subsection 1001.03.E.5. Maintain concrete at a temperature of at least 45 °F.

   a. **Insulated Forms-Substructure Concrete.** Apply blanket insulation tightly against the forms and fasten securely. Insulate corners and edges. If placing concrete against previously cast concrete, extend the blanket insulation at least 14 inches and hold in place against the previously cast concrete. Patch or cover tears and holes in the blanket.

   Cut polystyrene insulation to fit snugly between wood form studs and fasten securely. For steel forms, fit the insulation boards between the ribs and hold in place with adhesive or Department-approved fasteners.

   Provide insulating blankets or polystyrene insulation meeting the minimum thickness or the minimum R values specified in Table 706-1.

Table 706-1
Insulation Requirements

Thickness of Pour, (in)	Minimum Insulation Requirements			
	Unlined Steel Forms		Wood-Lined Steel or Wood Forms	
	Thickness (in)	R Value	Thickness (in)	R Value
<12	2	7.0	2	5.25
12 – 24	2	7.0	1.5	5.25
>24	1.5	5.25	1	4.0

   Clean ice, snow, and frost from forms when placing concrete. Place substructure concrete when the air temperature is above 35 °F, unless the form interiors, metal surfaces and adjacent concrete surfaces are preheated to at least 35 °F. Use only gas-fired burners if heating by direct flame. Place substructure concrete in insulated forms only when the air temperature is above 15 °F, except that the Contractor may place subfootings, footings, and cast-in-place concrete piles if the air temperature is above 0 °F. Wrap exposed portions of cast-in-place concrete piles with insulating blankets or protect them with straw.

   Cover the top of pours with insulating blankets. Cover inaccessible areas around protruding reinforcing bars with straw. Cover the tops of insulated pours, including the insulation, with tarpaulins or other Department-approved material.

Leave insulated forms in place until the concrete attains at least 50 percent of the required minimum 28-day flexural or compressive strength and for at least 5 days after final concrete placement in individual units.

Unless otherwise directed by the Engineer, do not loosen forms to lower temperatures. Remove blankets or straw from the tops of footings no earlier than the third day after casting to allow forming subsequent portions of the unit. Obtain the Engineer's approval before loosening forms or removing the top covering. If the outside air temperature reaches 0 °F or below, or the National Weather Service forecasts air temperatures 0 °F or below for the next 24 hours, do not remove forms for eight days after casting unless otherwise directed by the Engineer, and only if the air temperature is from 0 °F to 32 °F and the temperature difference between the air and the concrete surface is no greater than 30 °F. If possible, remove forms at mid-day.

b. **Insulated Forms-Superstructure Concrete.** If the National Weather Service forecasts air temperatures below 20 °F during the curing period, provide material and heating equipment on the project to protect forms and concrete. Do not begin placing superstructure concrete if the air temperature is below 35 °F.

Do not place superstructure concrete if the air temperature is below 40 °F, unless form interiors, metal surfaces, and the adjacent concrete surfaces are preheated to at least 40 °F. Use only gas-fired burners if heating by direct flame.

Insulating the bottom of deck forms is not required. If the National Weather Service forecasts air temperatures below 40 °F for more than 8 consecutive hours during the curing period, protect the top of the freshly placed concrete as soon as possible to maintain a concrete temperature of at least 45 °F. Use tightly joined insulating blankets or polystyrene insulation and insulate in accordance with Table 706-1.

Hang tarpaulins, or other Department-approved material from the top of the curb to enclose the entire protected section. If the temperature falls below 15 °F during the curing period, circulate heated air under the enclosed superstructure section. Maintain circulation for the remainder of the protection period required for concrete protected by heating and housing.

c. **Heating and Housing.** Before placing concrete in forms, provide enclosures for concrete sections being placed to maintain the specified temperatures within the enclosure.

Arrange enclosures to allow removal of forms and finishing of concrete surfaces without interrupting heating.

Provide uniform forced air or radiant heat in the enclosure. Vent the heating system to prevent exposure to carbon dioxide exhaust gases during concrete placement and curing.

Before placing concrete, preheat reinforcing steel and form surfaces to temperatures from 40 °F to 75 °F.

During and after concrete placement, operate the heating system to maintain an air temperature inside the enclosure from 40 °F to 75 °F. Maintain the temperature inside the enclosure until the concrete attains at least 50 percent of its required minimum 28-day flexural or compressive strength.

At the end of the heating period, decrease the temperature to the outside air temperature at a rate no greater than 15 °F per 12 hours. Allow the concrete surface to dry during the cooling period. Remove the enclosure.

In case of a heating system failure, provide emergency heaters for use within 1 hour. Place and operate heaters and provide for moisture, as directed by the Engineer.

K. **Construction and Expansion Joints.** Construct joints in concrete structures where shown on the plans. Clean laitance and other deleterious material from the contact concrete surface in place, and wet surfaces before placing new concrete. Finish face edges of joints to the line and elevation shown on the plans. Finish joint surfaces that provide expansion in the plane of the joint within ⅛ inch of a true plane. Form keys within reasonable tolerances, using suitable material.

1. **Sealer.** Use poured joint sealers of the type required by the contract. Handle hot-poured joint sealer material in accordance with subsection 602.03.S.

2. **Fiber Joint Filler.** Shape premolded expansion joint filler to fit adjacent concrete. Hold premolded expansion joint filler in place to prevent formation of concrete fins under or between expansion joint filler, and to prevent the joint filler from being dislodged during concrete placement.

3. **Joint Seals.** For concrete, install seals as shown on the plans.

   a. **Sawing Construction Joints.** Saw the joint groove at each transverse construction joint, as shown on the plans. Provide a joint groove symmetrical about the construction joint.

   b. **Expansion Joints.** Construct expansion joints as shown on the plans and symmetrical about the filler centerline.

   c. **Cleaning After Sawing.** Immediately after sawing, remove deleterious material from sawed joints.

   d. **Patching Transverse Joints.** Inspect and repair transverse joints in accordance with subsection 602.03.P.

   e. **Installing Seals.** Install the top of the seal ¼ inch below the surface of the deck.

4. **Expansion Joint Devices.** From the approved expansion joint devices shown in the contract, select joint devices for each location that are suitable to accommodate the total movement shown in the contract. Inform the Engineer of the selected expansion joint device.

   Submit complete working drawings of all details of fabrication of the expansion joint device in accordance with subsection 104.02. This requirement is waived for expansion joint devices for which a set of standard installation details has been approved. Standard installation details can be obtained from the Engineer.

   Fabricate expansion joint to conform to the contour of the bridge deck accounting for raised sidewalks, brush blocks and barriers as shown in the contract.

   Install expansion joint devices in accordance with the contract and as shown on the approved working drawings. Set the top of the expansion joint device ¼ inch to ⅜ inch below the top of the concrete slab or pavement.

   Tie deck reinforcing steel to steel frame anchors to maximum extent practicable without damaging galvanized or epoxy coatings.

   Clean expansion joint device and install the gland in one continuous piece in accordance with the manufacturer's recommendations.

   If splicing of the gland is required and approved by the Engineer, use a trained representative of the joint manufacturer to perform splicing.

   Remove shipping bolts prior to placement of concrete.

   Weld in accordance with subsections 707.03.E.7.b, 707.03.E.7.d, and 707.03.E.7.f.

5. **Expansion Joint Device Covers.** Install plate covers as shown in the contract. Cast curbs and sidewalks with sliding plates in place to ensure proper alignment of inserts and screws. Apply bond breaker to sliding plates before installation. Form concrete recess areas in sidewalks to receive sliding plates and grind to provide smooth surface. Tool or grind concrete edges to a ¼ inch radius.

   Apply one coat of epoxy resin adhesive to allow bent sliding plate to move freely without friction. Ensure no adhesive contacts the expansion joint device or gland. Remove foreign particles before installing plates. Install plates to position the anchors on the high side of longitudinal sidewalk grade. Repair damage to galvanized surfaces in accordance with section 716.

L. **Placing Anchor Bolts and Position Dowels in Concrete.** Set anchor bolts and position dowels in the forms using a template prior to placing concrete. If shown on the plans, the

Contractor may drill holes in hardened concrete and utilize adhesive anchors or mechanical expansion anchors in accordance with subsections 712.03.J and subsection 712.03.K at no additional cost to the Department.

Finish the surface around anchor bolts or position dowels in accordance with subsection 706.03.M.2.

M. **Finishing Plastic Concrete.** Do not over-vibrate or over-finish the completed surface. If approved by the Engineer, apply water to the concrete surface with a fog sprayer to aid finishing. After finishing, texture sidewalks and curbs in a transverse direction with a broom to produce uniform, narrow grooves no greater than ⅛ inch deep. Texture the final deck surface in accordance with subsection 706.03.M.3.

1. **Machine Finishing.** Use a self-propelled transverse finishing machine to strike off and finish concrete surfaces subject to vehicular traffic. To accommodate the type of finishing machine used, the Engineer may authorize elimination of longitudinal construction joints shown on the plans.

   Immediately before placing concrete, operate the finishing machine over the full length and width of the bridge segment to be placed, and adjacent segments if a pour sequence is required. Perform the test run with the screed adjusted to the finishing position. While operating the finishing machine, check the screed for deflection and adjustment. Measure and record the depth of the reinforcement below the screed, the controlling dimensions of deck reinforcement, and the forms. Make necessary corrections during the test run. Upon completion and documentation of the test run, do not make adjustments to the finishing machine or rails unless approved by the Engineer.

   When finishing concrete surfaces, complete screed passes with sufficient concrete material along the leading edge to ensure filling low spots. Leave the surface at the required grade, and free of water and laitance after the final pass of the screed. Remove deleterious material from the gutters, where the Engineer allows final hand finishing.

   As soon as practical, place the work bridge behind the finishing machine.

   While concrete remains plastic, test the slab surface for trueness with a 10 foot straightedge, or other Engineer-approved method. Finish the surface to the required grade and cross section.

   Without damaging concrete, completely remove rail supports or partially remove so no portion remains less than 3 inches below finished concrete. Fill the resulting holes with concrete, consolidate, and finish flush with the deck surface before the deck concrete hardens.

2. **Hand Floated Surface Finish.** Provide a floated surface finish on areas not requiring machine finishing, such as bridge seats, sidewalks, areas of bridge decks under sidewalks,

and similar surfaces. Finish by striking off the concrete surface with a screed set to the required cross section.

Vibrating or oscillating screeds may be used, if approved by the Engineer.

Provide a movable screed on guides set to the required elevation with allowance for camber, if required. After striking-off, finish the surface with a wood or magnesium float.

Broom finish the concrete surface under elastomeric bearings.

3. **Texturing.** Groove the final deck surface as soon as deck concrete can maintain a texture. Construct grooves perpendicular to the centerline. Form grooves in plastic concrete without causing edges to slump, or surface tearing. End grooving 12 inches to 16 inches from sidewalk or barrier edges. Do not groove within 3 inches to 6 inches of expansion or contraction joints or the end of the slab. Space grooves on ½-inch centers, ⅛ inch wide, and ⅛ inch deep. Random spacing is permitted if the spacing between grooves remains within the range of ¼ inch to 1 inch.

   The Engineer may require removal and replacement of deck surfaces that are not grooved as required. If the Engineer determines grooves are too shallow, but allows decks to remain in place, regroove after the concrete attains the required minimum 28-day flexural or compressive strength. Use a machine built specifically for grooving pavements, with blades 0.095 inch ±0.003 inch wide, spaced randomly from ¾ inch to 1¼ inch on centers. Orient grooves along the initial grooving at right angles to the centerline of the pavement or skewed no greater than the maximum skew of the bridge. Cut grooves uniformly ⅛ inch deep.

   Control and minimize dust from grooving operations. Remove and dispose of residue from the grooving operations to prevent debris from entering drainage systems.

4. **Surface Tolerances.** As soon as practical, check surface tolerances. If surfaces do not meet the specified tolerances, grind with a carborundum brick or other Department-approved methods. If grinding to obtain evenness results in an elevation below the limits shown on the plans, the Engineer will direct corrective action to be performed by the Contractor at no additional cost to the Department.

   Position bridge seats within ⅛ inch of elevations shown on the plans. Finish bridge seats under bearings or masonry plates to an unevenness of no greater than $\frac{1}{16}$ inch.

   Cast the tops of concrete subfootings within ½ inch of the elevations shown on the plans, and footings, wingwalls, parapets, slope walls, headers, and other surfaces within ¼ inch of the elevations shown on the plans.

   For final deck surfaces, cast decks to within a tolerance of ⅛ inch over 10 feet. Before acceptance, the Engineer will check the deck with a 10 foot straightedge and mark defective

areas. Remove or reduce high spots, ridges, or other defects greater than ⅛ inch by rubbing with a carborundum brick and water or grinding, and re-grooving.

N. **Curing.** Protect steel reinforcement from curing compound overspray. For air temperatures below 40 °F, cure concrete in accordance with subsection 706.03.J. For air temperatures of 40 °F and above, cure concrete in accordance with this section. Prepare and test work progress specimens, as necessary, in accordance with section 1002.

1. **Top Surfaces Exposed in the Completed Structure.**

   a. **Other than Bridge Decks.** Immediately upon completion of concrete finishing operations, spray curing compound uniformly on the concrete surface. Use transparent or white curing compound. Apply white curing compound at a rate of at least 1 gallon of compound per 150 square feet. Apply transparent curing compound in two coats at a rate of at least 1 gallon of compound per 300 square feet for each coat. Apply the second coat when the first coat dries sufficiently to avoid runoff, but no more than 2 hours after applying the first coat. Do not dilute the curing compound.

   b. **Bridge Decks.** Use a two-phase continuous 7-day wet-cure procedure. Before beginning concrete placement operations, demonstrate to the Engineer that curing materials and equipment are on-site and that equipment is in operating condition.

      Immediately after the bleed water sheen leaves the textured concrete surface, begin the first phase of the curing procedure by spraying a single coat of curing compound over the surface. Apply the curing compound at a rate of at least 1 gallon per 150 square feet of surface. Do not leave more than 10 feet of textured concrete surface exposed without curing compound.

      Prepare clean, contaminant-free burlap by soaking it in clean water for at least 12 hours before beginning concrete placement. Immediately before use, drape or suspend the burlap sheeting vertically to remove excess water that may dilute or damage plastic concrete. Cover concrete surfaces with wet burlap when the curing compound has dried sufficiently to prevent adhesion, and the concrete surface can support it without deformation, but no more than 4 hours after the concrete placement. Do not allow the burlap to dry once it is in place. Do not use burlap-polyethylene (Burlene) or other products with impervious surfaces.

      Install a network of soaker hoses over the wet burlap when the concrete surface can support it without deformation. Use soaker hoses perforated throughout their lengths within the limits of curing. Use soaker hoses of lengths and capacities capable of applying cure water uniformly and continuously over the entire bridge deck surface without the need to move the hoses periodically. Prevent excessive localized water discharge that may damage concrete surfaces. Use non-perforated hose outside the limits of curing.

Demonstrate to the Engineer that soaker hose systems provide uniform and thorough coverage of the deck surface.

Place a layer of transparent or white polyethylene film, at least 4 mils thick, over the deck surface and the soaker hose system. Overlap seams in the polyethylene at least 10 inches. Activate the wet cure system and maintain it to ensure uninterrupted wet curing of the deck surface. Control the water runoff to prevent soil erosion or hazards to traffic. Do not allow curing water runoff to discharge directly into surface waters.

Maintain the wet cure until the concrete attains the required minimum 7 day flexural or compressive strength and for at least 7 days following concrete placement. Do not remove the wet cure system based on 7 day compressive strengths attained in less than 7 days. Do not form or cast succeeding portions onto the bridge deck prior to completion of the 7 day two-phase continuous wet cure. Ensure excess or ponding cure water is removed prior to casting of succeeding structure portions.

2. **Top Surfaces to Which Succeeding Portions of the Structure Will Be Bonded.** Maintain top surfaces on which succeeding portions of the structure will be placed including, but not limited to, medians, shoulders, sidewalks, barriers, parapets, membrane waterproofing, tops of backwalls, tops of diaphragms, and latex overlays, free of curing compound.

   Begin wet curing when the concrete hardens sufficiently to prevent marring or water damage. Cure these surfaces by keeping them continuously wet until the concrete attains the required minimum 7-day flexural or compressive strength, and for at least 7 days following concrete placement. Do not form or cast succeeding portions onto the bridge deck prior to completion of the 7-day two-phase continuous wet cure. Forming of barriers and other appurtenances on raised sidewalks and brush blocks is permitted provided the wet cure is maintained.

3. **All Surfaces Other than Top Surfaces.** Cure surfaces, other than top surfaces, by keeping continuously wet until the concrete attains at least 70 percent of its required minimum 28-day flexural or compressive strength, and for at least 5 days following concrete placement. Alternately, cure concrete by leaving forms or other waterproof devices in place during the curing period, or by applying transparent membrane curing compound for structures.

   Do not use membrane curing compound on surfaces requiring water curing and bonding of additional concrete, or surfaces requiring application of joint waterproofing or protective coatings, or penetrating sealers.

   Clean surfaces of steel dowels, anchors, waterstops, exposed reinforcing steel, and similar devices of curing compound before encasement.

   For structures, apply transparent membrane curing compound in two coats, each of at least 1 gallon of compound per 300 square feet of surface. Apply the first coat immediately after

removing forms. Apply the second coat from 30 minutes to 2 hours after applying the first coat.

Apply curing compound using a brush, roller, or spray equipment capable of producing a uniform film, without causing the compound to run or sag. Obtain the Engineer's approval for spray equipment before use.

If the method of applying the compound does not produce a uniform film, stop using the curing compound and keep the concrete surface wet for the required curing period.

O. **Removing Falsework and Temporary Supports.** Leave falsework and temporary supports for concrete structures other than railings in place until the concrete attains at least 70 percent of its required minimum 28-day flexural or compressive strength, and for at least 5 days following concrete placement.

Falsework for railings may be removed after 15 hours.

Remove materials used to construct falsework outside low water limits to at least 6 inches below the finished ground surface. Remove falsework material inside low water limits to the stream bed.

P. **Removing Forms.** Do not remove vertical forms, including bulkheads at construction joints, until at least 15 hours after completion of the pour. Remove forms under slab spans, beams, girders, and brackets in accordance with subsection 706.03.O. If forms are braced against finished work portions subject to movement due to temperature changes, remove restraining falsework or adjust to prevent damage to the new work.

Q. **Placing Beams on Substructure Units.** Do not place beams until substructure concrete attains at least 70 percent of the required minimum 28-day flexural or compressive strength.

R. **Finishing Hardened Concrete.**

1. **General.** Remove concrete fins and irregular projections from surfaces, except those that will not be exposed, or those not requiring waterproofing. Clean honeycomb areas, broken corners or edges, cavities produced by form ties, other defects, and holes greater than ¾ inch in diameter and ⅜ inch deep. Keep surfaces saturated with water until pointed and trued with mortar. Mix the mortar using cement and fine aggregate of the proportions used in the concrete grade finished. Use a cement mixture composed of ⅔ of the brand used in the concrete and ⅓ white cement. Use fine aggregate from the same source as used in the concrete. Use workable mortar that has attained initial set. Restore consistency by reworking, but not retempering. Cure mortar patches in accordance with subsection 706.03.N.

2. **Rubbed Surface Finish.** If the contract requires a rubbed surface finish, start rubbing as soon as possible after removing forms and completing pointing and truing required in accordance with subsection 706.03.R.1. Immediately before beginning rubbing work, keep

the concrete saturated with water for at least 1 hour. Allow time before wetting concrete to allow mortar in pointing of holes and defects to set. Do not damage mortar used in pointing of holes and defects. Rub the surfaces with a medium-coarse carborundum brick. Do not paint or plaster surfaces with neat cement or mortar. Continue rubbing to obtain a uniform surface, including the removal of form marks, projections, and irregularities, and filling of voids. Leave paste in place produced by this rubbing.

After casting all concrete above the treated surface, obtain the final finish by rubbing with a fine carborundum brick and water. Continue rubbing to produce a smooth surface, uniform in color.

After completion of final rubbing and the after the surface dries, rub with burlap to remove loose powder. Leave rubbed surfaces free of unsound patches, paste, powder, and marks that the Engineer determines objectionable.

S. **Penetrating Water Repellent Treatment.** Before applying the material, provide the Engineer with the product data sheets showing manufacturer's recommended surface preparation, application procedure, and temperature range.

Unless adjacent steel surfaces require coating after concrete cleaning, protect them to prevent damage. If damage occurs, repair it according to the contract at no additional cost to the Department.

1. **Application.** Apply penetrating water repellent material in accordance with the manufacturer's recommendations and at the application rate specified in the Qualified Products List. Do not dilute or alter penetrating water repellent material.

2. **Limitations.** Cure concrete at least 28 days before treating. Allow concrete to air dry during the final 48 hours of the curing period. Apply penetrating water repellent material to surface dry concrete.

   Apply penetrating water repellent material when the concrete and the air temperature are within the range recommended by the manufacturer, but no colder than 40 °F.

   Do not spray the water repellent material if wind, rain, or other conditions are present that will adversely affect the application.

T. **Electrical Grounding System.** Use electricians licensed in the state of Michigan, experienced in grounding system installation, to perform grounding work. Install a ground at each side of the bridge, at opposite ends.

Weld bonding jumpers across the steel structure at the expansion joints and across the steel fence posts at expansion joints. Size bonding jumpers, as approved by the Engineer, to allow for the movement of the expansion joints. Install grounding cables down the piers or abutments from

the bonding jumpers, fence posts, or steel fence, to the grounding rod. Make connections with exothermic welds. Use the required mold and associated equipment for each connection.

Install bonding jumpers and grounding cables to allow for at least 2 inches of expansion between connections.

Measure ground resistance using the fall-of-potential method and do not exceed 25 ohms. If a single 8-foot grounding rod does not attain 25 ohms, drive additional 8-foot grounding rods, added to the top of the first rod or driven as a second ground, and connect to the first ground.

Place grounding cables and tops of grounding rods at least 12 inches below finished ground.

U. **Name Plates.** Furnish and install name plates as shown on the plans. Before installation, submit name plates, with the required data imprinted legibly in the surface, to the Engineer for approval.

V. **Wall Drain.** Attach wall drain strips as recommended by the manufacturer. Peel geotextile layers from the core at the lower edge and wrap around the foundation underdrain. Provide additional geotextile sections to completely encapsulate the pipe-strip junction. Shingle lap geotextile to preclude entrance of backfill material.

Hold the top composite strip snug against the wall using mechanical means or a heavy bead of caulk, as approved by the Engineer, until the backfill is placed.

Repair damage to composite strips or replace the strip. Deliver and store composite strips in ultraviolet resistant wrapping. Protect composite strips from prolonged exposure to sunlight in accordance with the manufacturer's instructions.

706.04. Measurement and Payment.

Pay Item	**Pay Unit**
False Decking	Square Foot
Reinforcement, Steel	Pound
Reinforcement, Steel, Epoxy Coated	Pound
Reinforcement, Stainless Steel	Pound
Reinforcement, Steel, Culv and Headwall	Pound
Conc, Grade __	Cubic Yard
Conc, Grade 3500, Subfooting	Cubic Yard
Substructure Conc	Cubic Yard
Substructure Conc, High Performance	Cubic Yard
Superstructure Conc	Cubic Yard
Superstructure Conc, High Performance	Cubic Yard
Superstructure Conc, Night Casting	Cubic Yard
Superstructure Conc, Night Casting, High Performance	Cubic Yard

Water Repellent Treatment, Penetrating..... Square Yard
Expansion Joint Device..... Foot
Expansion Joint Device, Cover Plate..... Foot
Pipe Sleeve, __ inch ..... Each
Pipe Sleeve, __ inch, Placed ..... Each
Conduit, __ inch ..... Foot
Conduit, __ inch, Placed ..... Foot
Superstructure Conc, Form, Finish, and Cure (Structure Identification) ..... Lump Sum
Superstructure Conc, Form, Finish, and Cure,
Night Casting (Structure Identification) ..... Lump Sum
Bridge Ltg, Furn and Rem (Structure Identification)..... Lump Sum
Bridge Ltg, Oper and Maintain ..... Cubic Yard
Conc, Low Temperature Protection ..... Cubic Yard
Elec Grounding System ..... Each
Wall Drain..... Square Foot
Aesthetic Texturing ..... Square Yard

A. **General.** Unless otherwise specified, the Engineer will calculate pay quantities for pay items listed in this subsection based on the lines and dimensions shown on the plans. The Engineer will calculate concrete volumes without subtracting the volume of steel reinforcement, or steel h-piling.

B. **False Decking.** The Engineer will measure **False Decking** for the total area protected, including beam widths. The unit price for **False Decking** includes the cost of providing, installing, maintaining, moving, and removing false decking material or barges.

C. **Steel Reinforcement.** The Engineer will calculate the weight of bars or bar mats, plain or coated, from the theoretical bar weights in accordance with Table 706-2, based on the total calculated weight for the bar sizes and lengths, mesh, or bar mats. The Engineer will not make allowance for the weight of coating.

Table 706-2
Weights for Reinforcing Bars

Bar Size Designation	Weight, (lb/ft)	Diameter, Round Sections, (in)
No. 3	0.376	0.375
No. 4	0.668	0.500
No. 5	1.043	0.625
No. 6	1.502	0.750
No. 7	2.044	0.875
No. 8	2.670	1.000
No. 9	3.400	1.128
No. 10	4.303	1.270
No. 11	5.313	1.410
No. 14	7.65	1.693
No. 18	13.60	2.257

The unit prices for **Reinforcement, Steel, Reinforcement, Steel, Epoxy Coated, Reinforcement, Stainless Steel,** and, **Reinforcement, Steel, Culv and Headwall** includes the cost of furnishing and installing the reinforcement.

D. **Structure Concrete.** Conduct concrete quality control as specified in section 1002 and the contract. The Engineer will conduct quality assurance as specified in section 1003 and the contract. The Department will pay for concrete required for this work based on the quality assurance results.

Provide substructure concrete and superstructure concrete for bridge structures. Provide concrete of the grade required for box and slab culverts, headwalls, parapets, wingwalls, retaining walls, tremie seals, and other structures.

The Engineer will measure superstructure concrete for decks based on batch plant tickets with deductions made for material wasted or rejected.

The unit prices for **Substructure Conc**, **Substructure Conc, High Performance**, **Conc, Grade __**, and **Conc, Grade 3500, Subfooting**, include the cost of forming, finishing and curing.

If the contract requires casting concrete against steel sheet piling, the Engineer will calculate the concrete volume based on an outline to the mid-point of the corrugations in the sheet piling section.

The Engineer will not make deductions in concrete volumes for piles embedded 12 inches or less.

If casting concrete footings on or against excavated rock, the Engineer will make an allowance in concrete volume for rock overbreak within 6 inches outside and 6 inches below the neat outline of the footing.

The Engineer will measure, and the Department will pay for concrete placed by pumping as concrete placed by other methods. The Department will not adjust the unit price of concrete due to adjustments in aggregate proportions, or an increase in cement to facilitate the use of pumping equipment, or for the water-cement slurry pumped through the discharge pipe at the beginning of a pour.

E. **Water Repellent Treatment, Penetrating.** The unit price for **Water Repellent Treatment, Penetrating** includes the cost of preparing concrete surfaces and providing and placing water repellent material.

F. **Expansion Joint Device.** The Engineer will determine **Expansion Joint Device** quantities by the joint device length placed within the limits in the contract or authorized by the Engineer, including allowance for vertical heights and the terminal assemblies at the curbs, sidewalks or barriers. The unit price for **Expansion Joint Device** includes the cost of providing and placing

attaching hardware for the device and all materials and labor required for proper installation of the expansion joint and terminal assemblies at the curbs, sidewalks or barriers.

G. **Expansion Joint Device, Cover Plate.** The unit price for **Expansion Joint Device, Cover Plate** includes providing the cover plate and associated hardware for proper installation of the cover plate. The Engineer will determine **Expansion Joint Device, Cover Plate** quantities by measuring the length of cover plate placed within the limits shown on the plans in the contract or authorized by the Engineer.

H. **Conduit and Pipe Sleeve.** The unit prices for **Conduit, __ inch** and **Pipe Sleeve __ inch** include the cost of providing and installing conduit or pipe sleeve.

The unit prices for **Conduit, __ inch, Placed**, and **Pipe Sleeve, __ inch, Placed** include the cost of installing conduit or pipe sleeve provided by others.

The Department will not make additional payments to the Contractor for additional work of forming for conduit or ducts.

I. **Superstructure Concrete, Form, Finish, and Cure.** The Engineer will measure **Superstructure Conc, Form, Finish, and Cure** as a unit for each structure.

The unit prices for **Form, Finish, and Cure** pay items include the cost of finishing and curing concrete, designing, fabricating, providing, and erecting forms or permanent metal deck forms, and providing and installing polystyrene.

J. **Bridge Lighting.**

1. **Furnishing and Removing.** The Engineer will measure **Bridge Ltg, Furn and Rem** as a unit for each structure. The unit price for **Bridge Ltg, Furn and Rem** includes the cost of furnishing, placing, and removing the lighting system for nighttime lighting.

2. **Operating and Maintaining.** The Engineer will measure **Bridge Ltg, Oper and Maintain** based on cubic yards of superstructure concrete cast at night. The unit price for **Bridge Ltg, Oper and Maintain** includes the cost of operating and maintaining the lighting system.

K. **Low Temperature Protection.** If the contract does not include a separate item for **Conc, Low Temperature Protection**, and the Department orders low temperature protection work due to Department-caused delays, or the Department orders an expedited progress schedule, the Department and the Contractor will agree on a unit price for **Conc, Low Temperature Protection** before beginning protection work.

The Department will pay for **Conc, Low Temperature Protection** based on the concrete quantity actually protected if the quantity did not increase due to the Contractor's failure to perform the

work as shown on the progress schedule or due to the Contractor performing more work than shown on the progress schedule.

L. **Electrical Grounding System.** The unit price for **Elec Grounding System** includes the cost of providing and installing the complete system to ground the bridge on two sides.

M. **Wall Drain.** The unit price for **Wall Drain** includes the cost of providing and attaching geocomposite and additional geotextile to wrap the foundation underdrain. The Engineer will measure, and the Department will pay for foundation underdrain in accordance with subsection 404.04.

N. **Aesthetic Texturing.** The Engineer will measure **Aesthetic Texturing** by the square yard of the area textured without allowance for the shape and depth of the texturing. The unit price for **Aesthetic Texturing** includes:

1. Providing form liners;
2. Replacement of damaged form liners;
3. Installation of form liners;
4. Initial test sections;
5. Subsequent test sections, if any;
6. Concrete surface repair of surfaces that do not meet the quality and finish of the test section;
7. Shop drawings; and
8. Release agents.

O. **Providing and Placing Interim Curing Material.** The unit prices for the relevant structural concrete pay items includes the cost of providing and placing interim curing material on bridge deck top surfaces, exposed in the completed structure.

P. **Name Plates.** The cost of providing, fabricating, imprinting, and installing name plates on structures is included in the unit prices for other items of work.

Q. **Unstable Foundations.** The Department will pay for special treatment for unstable foundations at the unit price or authorized unit price for the item of work.

Section 707. STRUCTURAL STEEL CONSTRUCTION

707.01. Description. This work consists of fabricating, furnishing, galvanizing, shop cleaning and coating, delivering, and erecting structural steel.

A. **Definitions.** The following definitions apply to this work:

Main Member. Any member on the critical load path that carries dead and live loads. The loss of capacity of this member would have a serious consequence on the structural integrity. Main members include, but are not limited to: rolled beams, plate girders, bent caps, end cross-frames and diaphragms and connecting plates, cross-frames and diaphragms and connecting plates of horizontally curved girder bridges, intermediate cross-frames and diaphragms and connecting plates in the negative moment region of continuous span and cantilevered span beams and girders, columns, arch ribs, link plates, tension ties, truss members, and modular expansion joints.

Primary Components. The individual components of a main member including, but not limited to: webs, flanges, bearing stiffeners, splice plates, and cover plates.

Secondary Member. Any member other than a main member, not designed to carry primary loads. Secondary members include, but are not limited to: intermediate cross-frames and diaphragms for straight girders.

B. **Plant Certification Requirements.** AISC certification is required for the structural steel fabrication work listed below.

1. Certified Bridge Fabricator - Simple (SBR): Unspliced rolled beams, pin and hanger assemblies (excluding machining operations), diaphragms, cross-frames, lateral bracing, connection angles, and plates.

2. Certified Bridge Fabricator – Intermediate (IBR): Spliced (field or shop) rolled beams that are straight or with a radius over 500 feet; built-up I-shaped plate girders with constant web depth (except for dapped ends) with or without splices (field or shop) that are straight or with a radius over 500 feet; built-up I-shaped plate girders with a variable web depth (haunched) that are straight or with a radius over 1000 feet; trusses with a length of 200 feet or less that are entirely pre-assembled at the certified fabrication plant.

3. Certified Bridge Fabricator - Advanced (ABR): Tub or trapezoidal box girders, closed box girders, non-preassembled trusses, trusses over 200 feet in length, arches, cable-supported bridges, moveable bridges, and bridges with a radius less than or equal to 500 feet.

4. Bridge Component Quality Management System Certification (CPT): Bridge rails, stairs, walkways, bridge grid deck and sidewalks, drains, scuppers, expansion joint devices,

bearings, ballast plates, mechanical movable bridge equipment and other highway structures such as cameras, light standards, tower lighting units, dynamic message signs, bridge mounted signs, cantilever signs, truss signs, strain poles, and traffic signal mast arms.

5. Sophisticated Paint Endorsement (SPE): Painting steel surface areas greater than 500 square feet. Society of Protective Coatings (SSPC) QP 3, *Certification Standard for Shop Application of Complex Protective Systems* will also be accepted.

6. Fracture Critical Endorsement (FC): Required for the fabrication of steel bridge members designated fracture critical in the contract. The fabricator must also possess valid ABR or IBR certifications as defined above.

Correct findings that do not conform to AISC plant certification. Provide a copy of the certificate of conformance to the Engineer before beginning production. If requested, make all plant certification annual and special immediate audit findings and audit dates available to the Department for all fabrication plants performing work on the project.

C. **Shop Cleaning and Coating.** Shop clean and coat structural steel in accordance with section 716.

707.02. Materials. Provide material in accordance with the following:

Structural Steel..... 906
High Strength Steel Bolts, Nuts, and Washers 906
Pins 906
Shear Developers 906
Miscellaneous Metals..... 908
Elastomeric Bearings 914
Non-Metallic Washers 914

Provide bushings with a nominal wall thickness of ¼ inch, selected from the Qualified Products List.

Provide steel castings unless cast iron or other material is required or approved by the Engineer in writing.

Provide the Engineer with a Mill Test Report (MTR) from the manufacturer's records that indicates the chemical composition and physical properties of the structural steel material. Provide an affidavit stating that the structural steel material meets the contract. If the MTR is unavailable arrange for chemical and physical property tests. Provide a certified copy of the test reports and affidavit to the Engineer at no additional cost to the Department.

Identify each MTR and affidavit with the relevant project information (structure number, control section, and project number) and specific member piece mark (as shown in the approved shop drawings).

Members designated to be fracture critical in the contract must be considered fracture critical regardless of the direction of stress. Steel material, including splice plates (excluding fill plates), for fracture critical members (FCM) must satisfy the material specifications stated on the plans and include supplemental requirements for toughness for FCM furnished to Zone 2.

707.03. Construction.

A. **Shop Drawings.** Prepare shop drawings of fabrication details in accordance with subsection 104.02. Do not use contract plans instead of shop drawings. All weld procedure specification (WPS) numbers must be shown in the tail of each weld callout on the shop drawings. Submit all WPS's and supporting procedure qualification records (PQR) with the shop drawings for the Department's review and approval.

Do not start fabrication before the Engineer approves the shop drawings and WPS. Provide the quality assurance inspector (QAI) with a hardcopy of the approved shop drawings and WPS's. Provide the Engineer with one complete set of pay weights for review and approval.

B. **Shop Inspection.** The Department will provide a QAI to perform shop inspection for structural steel, castings, and similar materials required to be accepted based on "Fabrication Inspection" in accordance with the contract. The fabricator must establish and maintain an effective quality control program in accordance with AISC and the contract. The Department's shop inspection is not a substitute for the fabricator's quality control program.

1. **Fabrication Notification.** Provide the Engineer with a fabrication start date at least 14 days before beginning fabrication.

   If the fabricator suspends work for a period in which the Department's QAI leaves the fabrication plant, provide the Engineer with a fabrication start date at least 14 days, or as approved by the Engineer, before restarting fabrication.

2. **Prefabrication Meeting.** A prefabrication meeting will be held between the Engineer and fabricator before fabrication begins. The fabricator must provide the following representatives: plant manager and quality control manager; engineering and production personnel as appropriate; and, if applicable, subcontractor representatives who are to perform operations including, but not limited to, coating, galvanizing, fabrication, and testing. The fabricator must review all aspects of the contract prior to the prefabrication meeting to avoid problems that may complicate or delay fabrication. The fabricator must provide the Engineer with the proposed fabrication schedule and delivery of completed material.

3. **Inspection Facilities.** Provide facilities for the inspection of material and workmanship at no additional cost to the Department and in accordance with subsection 809.03.A, except as follows:

   a) Provide an office close to the fabrication facility with at least 120 square feet of floor space and shared by no more than one other QAI. The Engineer may approve sharing larger offices with additional QAIs.
   b) Provide a parking space for the QAI next to the office.
   c) Include a desk, chair, locker, plan rack, secure storage space for testing equipment, high-speed broadband internet service, and a telephone.

4. **QAI Authority.** The QAI has the authority to inspect the work at the fabrication facility in accordance with subsection 104.01.E. If problems arise that the QAI cannot resolve, the Engineer will arrange a meeting with the QAI, Contractor, and fabricator to resolve the issue.

5. **Acceptance.** Acceptance of structural steel material will be based on a two-part process described in the *Structural Fabrication Quality Manal*. The Engineer may reject fabricated members at the project that the QAI accepted at the shop, due to damage or deficiencies. The Engineer will evaluate the damage or deficiencies on a case by case basis if the fabricator submits a nonconformance report (NCR) for the Engineer to review.

C. **Fracture Critical Members.** Fabrication procedures must follow the current AASHTO/AWS D1.5, *Bridge Welding Code* (AWS D1.5) as modified herein. All members (plates, bent plates, or rolled shapes) welded to fracture critical members must be considered fracture critical regardless of the direction of stress. All gusset plates, splice plates (excluding fill plates), and strengthening material (plates, bent plates, or rolled shapes) bolted to a fracture critical member must be considered fracture critical regardless of the direction of stress. This includes stiffener plates used as a connection plate.

D. **Furnishing and Fabricating.**

1. **Direction of Rolling.** Steel plates for main members and flange splice plates must be cut and fabricated so that the primary direction of rolling is parallel to the direction of the main tensile and/or compressive stresses. Steel web splice plates, fillers, gusset plates not serving as chord splices, connection plates, and web stiffeners are not included in this rolling direction requirement.

2. **Identification.** Identify all structural steel materials in accordance with ASTM A6/A6M. Transfer heat numbers to primary components removed from larger plates immediately after cutting. Use temporary markings that will remain integral with a component or member through fabrication until the final member is permanently identified using low-stress stamps or dot matrix.

Do not stamp link plates, pin plates, or pins. Stamp main members in the top flange cross-sectional area or on the top of the compression flange, within 6 inches of the beam end before coating. Show the match-marking scheme on the shop drawings. Markings must be legible after completion of the final coating system.

A low-stress die stamp is defined as a round bottom impression tool producing an indentation conforming to the dimensions shown in Table 707-1.

Table 707-1
Low-Stress Die Stamping Tool Dimensions (in.)

Character Size	Minimum Tip Radius	Nominal Impression Width for 0.010 Inch Depth
1/16	0.005	0.020
3/32	0.006	0.021
1/8	0.007	0.022
3/16	0.008	0.026
1/4	0.010	0.031
3/8	0.014	0.042
1/2	0.020	0.062

3. **Workmanship.** Fabricate bridge steel components in accordance with Clause 3 of AWS D1.5, except as modified herein. When flame cutting bridge member flange and web plates, flame cut both edges simultaneously to reduce warpage and distortion.

   Fabricate structural steel components in accordance with Clause 5 of AWS D1.1, *Structural Welding Code–Steel* (AWS D1.1), except as modified herein.

4. **Lifting Methods.** Lifting lugs may be used for beams and girders provided they are welded to the top of the top flange in areas subject to compression in the final structure. Lifting lugs may be used for other members provided they are welded in areas subject to compression in the final structure as approved by the Engineer. Lifting lugs must be designed by a professional engineer licensed in the state of Michigan. Submit lifting lug detail and design calculations to the Engineer for review and approval before fabricating.

   Perform visual testing (VT) and magnetic particle testing (MT) on the entire length of all fillet welds in accordance with subsection 707.03.D.11. Include a note on the shop drawings describing if lifting lugs will lift one member or will lift assemblies of two or more members.

   Remove lifting lugs immediately after erecting the member by cutting and grinding the area to a smooth transition to a roughness not exceeding 125 micro-inches per inch root mean square (rms). After the lifting lugs are removed, perform VT, MT, and dye penetrant testing (PT) on the entire base metal, area in accordance with subsection 707.03.D.11, at all locations where welds were removed.

Provide lifting devices with softeners to prevent damage. If using hooks for lifting, provide jaw and throat widths large enough to prevent damage. Provide spreader beams or multiple cranes for lifting plates and long slender members to prevent overstress and distortion.

5. **Distortion and Shrinkage.** Control distortion and shrinkage in bridge fabrication in accordance with Clause 3 of AWS D1.5. Prepare a welding sequence and distortion control program in accordance with Clause 3 of AWS D1.5 before the start of welding on bridge members.

   Control distortion and shrinkage in non-bridge structural steel members in accordance with Clause 5 of AWS D1.1.

6. **Straightening and Repair of Damaged Material.** Submit a heat straightening plan to the Engineer for review and approval before the start of straightening. Straighten material without producing cracks or other damage. Straighten distorted members by carefully planned and supervised application of limited localized heat in conjunction with mechanical restraining forces. Do not heat material, meeting ASTM A709/A709M HPS70W and HPS100W, above 1,100°F or above 1,200°F for all other steels as determined by temperature-indicating crayons, liquids, or bimetal thermometers. Inspect the surface of the metal for damage after straightening. Perform VT and MT on the entire heat straightened area and on all weldments in or adjacent to the heat straightened area as directed by the Engineer.

   Straighten flanges for bridge members with butt welded connections before fitting flanges to the web. Remove distortion from welding or handling by applying heat over the full width of the flange and cool slowly. Do not force cooling. Complete straightening before performing VT and MT of the welds. The Engineer may reject material with kinks or bends.

7. **Dimensional Tolerances.** The dimensions of bridge members must comply with the tolerances shown in Clause 3 of AWS D1.5 and the AISC 303 *Code of Standard Practice for Steel Buildings and Bridges*. The dimensions of other structural steel members must comply with the tolerances shown in Clause 5 of AWS D1.1 and the AISC 303 *Code of Standard Practice for Steel Buildings and Bridges*.

8. **Cambering.** For projects designed in accordance with the AASHTO LRFD *Bridge Design Specifications*, accomplish cambering, camber adjustment, and horizontal curvature of bridge members by heat or by cutting in accordance with the current AASHTO LRFD *Bridge Construction Specifications*. For projects designed in accordance with AASHTO *Standard Specifications for Highway Bridges*, 17th edition, accomplish cambering, camber adjustment, and horizontal curvature by heat in accordance with Division II of AASHTO *Standard Specifications for Highway Bridges.*

   When cover plates or stiffeners are to be attached to rolled beams/plate girders then the beams/girders must be heat-curved before the cover plates and stiffeners are attached.

For projects designed in accordance with the AASHTO LRFD *Bridge Design Specifications*, accomplish cold or hot bending in accordance with the AASHTO LRFD *Bridge Construction Specifications.* For projects designed in accordance with AASHTO *Standard Specifications for Highway Bridges*, accomplish cold or hot bending in accordance with Division II of AASHTO *Standard Specifications for Highway Bridges*.

Use temperature monitoring devices during the heating process to verify the temperature.

The fabricator must measure the camber of each bridge member in the shop with the QAI present.

9. **Fit of Stiffeners.** Remove and correct stiffeners showing evidence of compressive stress, such as waviness along the stiffener length, after fitting is completed but before welding. Stiffeners must be fabricated with a tight fit in accordance with AWS D1.5.

10. **Shop Welding**

    a. **General Bridge Welding.** Weld bridge main members and secondary members in accordance with AWS D1.5 as modified herein.

    When necessary, use a butt joint for primary components (flanges and webs for flexural members and plates for axial members) of main members using complete joint penetration (CJP) groove welds prior to welding the primary components together to form the member.

    i. Use the automatic submerged arc welding (SAW) process in the flat (1F or 1G) or horizontal (2F) welding positions to make the following welded connections as specified in the contract:

    - Flange to flange and web to web butt joint;
    - Flange to web corner or T-joint;
    - Plate to plate corner or T-joint for built-up axial members;
    - Cover plate lap joint; and
    - Stiffener and connection plate T-joint to web.

    ii. Use the shielded metal arc welding (SMAW) process, handheld SAW process, flux-cored arc welding (FCAW), or gas-metal arc welding (GMAW) process to make the following welded connections as specified in the contract:

    - Stiffener and connection plate T-joint to flanges;
    - Internal stiffener and connection plate T-joint (built-up box, trapezoidal, or 3-sided members);
    - Intermediate cross frames for horizontally curved girders; and

- Other welding applications if the limited access, isolated locations, or short weld lengths render the use of automatic or semi-automatic welding equipment impractical as determined by the Engineer.

iii. Use E7018 electrodes for the SMAW process unless the contract requires use of a different electrode specification and classification.

iv. Do not weld using electroslag or electrogas processes. Do not use GMAW on FCM.

v. Remove weld metal splatter on adjacent base metal, using a procedure approved by the Engineer, before blast cleaning and coating the steel.

vi. Maintain areas where welding is taking place at an ambient temperature of 40 °F for at least 1 hour before the start of welding and during the entire welding operation.

vii. Provide a minimum 5⁄16 inch fillet weld for the following connections, unless a larger weld size is specified in the contract:

- Flange to web T-joint;
- Plate to plate T-joint for built-up axial members; and
- Cover plate lap joint.

viii. Determine the minimum fillet weld size for all other bridge welding in accordance with Table 707-2, unless a larger weld size is specified in the contract.

Table 707-2
Minimum Fillet Weld Size

Base Metal Thickness of Thicker Part Joined, T, (in)	Minimum Size of Fillet Weld (in)
T ≤ ¾	¼
¾ < T ≤ 1 ½	5⁄16
1 ½ < T ≤ 2 ¼	⅜
2 ¼ < T ≤ 6	½
T > 6	⅝

ix. Determine the minimum partial joint penetration (PJP) groove weld size for all bridge welding in accordance with Table 707-3, unless a larger weld size is specified in the contract.

Table 707-3
Minimum Effective Weld Size for PJP Groove Weld

Base Metal Thickness of Thicker Part Joined, T, (in)	Minimum Effective Weld Size[a] (in)
T ≤ ¾	¼
¾ < T ≤ 1 ½	5⁄16

1 ½ < T ≤ 2 ¼	⅜
2 ¼ < T ≤ 6	½
T > 6	⅝
a. Except the effective throat need not exceed the thickness of the thinner part.	

b. **General Structural Steel Welding.** Perform structural steel welding in accordance with AWS D1.1 as modified herein. The following structures and members are required to be welded in accordance with AWS D1.1:

i. Highway structures including, but not limited to: light standard, tower lighting unit, dynamic message sign, bridge mounted sign, cantilever sign, truss sign, strain pole, and traffic signal mast arm, and other highway structures specified in the contract;
ii. Bridge railing;
iii. Stairs and walkways;
iv. Bridge deck grids;
v. Sidewalk grids;
vi. Bridge expansion joints (except modular expansion joints); and
vii. Mechanical moveable bridge equipment.

Use E7018 electrodes for the SMAW process unless the contract requires use of a different electrode specification and classification.

Do not use electroslag or electrogas welding processes.

Remove weld metal splatter on adjacent base metal, using a procedure approved by the Engineer, before blast cleaning and coating the steel.

Determine the minimum fillet weld size for structural steel welding in accordance with AWS D1.1. Determine the minimum PJP groove weld size for structural steel welding in accordance with AWS D1.1.

c. **Welder Endorsements.** Welding personnel such as welders, welding operators, and tack welders, must be qualified in accordance with AWS D1.5 for bridge welding and AWS D1.1 for structural steel welding. Additional performance testing is required in accordance with the MDOT *Welder Qualification Program* under the supervision of the QAI. Welder performance endorsements from other agencies will not be accepted.

The period of effectiveness for shop welding personnel endorsed through MDOT's *Welder Qualification Program* is three years unless welding personnel are not engaged in a welding process for at least six months or a specific reason exists to question the welder's ability. The Engineer may require a confirming performance test during the progress of the work.

11. **Nondestructive Testing of Bridge Welds.** NDT of bridge welds is required in accordance with AWS D1.5, except as modified herein. The fabricator must provide labor, equipment, and materials for testing as specified in the contract. The Engineer may review the NDT equipment, materials, and procedures. Do not begin NDT before QAI is present.

    Personnel certified as Level II in accordance with the ASNT *Recommended Practice No. SNT-TC-1A* must perform NDT as required by the contract. VT of the entire length of all welds must be performed by a CWI. Ultrasonic test (UT) the entire length of all plug and slot welds in main members.

    a. **Scope of Examination of Groove Welds.** Radiographic test (RT) CJP groove welds in butt joints of main members. Use UT methods for examining CJP groove welds in corner and T-joints of main members. RT or UT frequency of CJP groove welds in main members must be performed in conformance with AWS D1.5, except as specified below:

        i. 100 percent of each flexural member flange butt joint subject to tension or compression;
        ii. 100 percent of each axial member joint subject to tension or reversal of stress;
        iii. Vertical web joints must be tested for ⅓ of the web depth beginning at the point of maximum tension, but not less than 12 inches. In addition, test 25 percent of the remainder of the web depth beginning at the point of maximum compression, but not less than 12 inches.
        iv. 25 percent of each axial member joint subject to compression;
        v. 25 percent of each joint subject to shear such as web to flange joints in flexural members; and
        vi. If unacceptable discontinuities are found in any of the above partial examinations then test the remainder of the weld and test 100 percent of similar welds.

        Place RT film on each side of the joint on the planar side of the plate. Film may need to be double loaded on thicker side of joint to improve density readings. Correctly position the pack on the transition side of the plate and use tapered edge blocks. If substandard images result from film placement on the planar side, then move the film to the transition side and retest.

        Use extension blocks to extend RT film at least 1 inch beyond the edges of the joint being RT.

        Submit UT procedures for CJP groove weld corner joints and other weld joints with backup bars to the QAI for review prior to performing NDT.

        Perform RT or UT on all CJP groove welds and provide final reports to the QAI before assembling and welding to fabricate members.

PT both ends of all CJP and PJP groove welds in the main members listed in subsection 707.01.A or specified in the contract in accordance with ASTM E165/E165M.

MT at least 12 inches in every 10 feet of each PJP groove weld connecting primary components of main members or connecting a secondary component to a main member. Perform MT in accordance with ASTM E709 with dry powder using the yoke method.

Make required identification marks on CJP groove welds in butt joints with paint. Do not stamp identification marks.

b. **Scope of Examination of Fillet Welds.** MT fillet welds joining primary components of main members and secondary components welded to main members in accordance with AWS D1.5, except as modified herein. Perform MT in accordance with ASTM E709 with dry powder using the yoke method.

MT at least 12 inches in every 10 feet of each fillet weld for the following joints:

i. Web to flange of girders, floor beams, stringers;
ii. Plate to plate for built-up axial members;
iii. End diaphragm connection plates to web or flange;
iv. Diaphragm sealing plate or gussets to web or flange in box members;
v. Cross frame and diaphragm assemblies on curved bridges;
vi. Sole plate to flange; and
vii. Intermediate stiffeners and connection plates to web.

MT the entire length of each stiffener or connection plate fillet weld connecting to the tension flange of main members.

Locate the MT randomly in members to produce results typical for each fillet weld size. If test results show unacceptable defects, test the full length of the weld or 5 feet on each side of the tested length, whichever is less.

c. **Weld Condition.** Clean paint, scale, grease, slag, and other deleterious material from welded edges and surfaces. Grind flange, web, and pin plate CJP groove welds flush on aligned side and merge smoothly on transition side. Finish surfaces to a roughness rating of 125 micro inches per inch rms or less.

Remove loose mill scale adequately away from the weld joint to allow UT using the required scanning patterns and testing angles.

d. **Defective Welds.** Repair and replace welds with rejectable defects documented by fabricator or Department personnel, regardless of the NDT method and regardless of conflicts in test results from other NDT methods. Submit an NCR for the Engineer's approval before beginning repairs.

Repair or remove and replace welds in accordance with AWS D1.5. Perform NDT on repaired or replaced welds, including at least 3 inches on all sides of the repair, using the methods and frequencies stated in the contract.

Remove and replace the entire weld if a second repair attempt results in a defective weld. The Engineer may reject the entire member if it is determined that the weld defects are excessive, proposed weld repairs are excessive, or the same defect undergoes weld repair more than twice.

12. **Nondestructive Testing of Structural Steel Welds.** NDT of structural steel welds is required in accordance with AWS D1.1, except as modified herein. The fabricator must provide labor, equipment, and materials for testing as specified in the contract. The Engineer may review the NDT equipment, materials, and procedures. Do not begin NDT before QAI is present.

    Personnel certified as Level II in accordance with the ASNT, *Recommended Practice No. SNT-TC-1A* must perform all NDT tests. VT must be performed by a CWI on the entire length of all welds.

    Perform PT on both ends of all CJP and PJP groove welds in the structures and members listed in subsection 707.03.D.10.b in accordance with ASTM E165/E165M.

    Perform MT on at least 12 inches in every 10 feet of each PJP groove weld and fillet weld in the structures and members listed in subsection 707.03.D.10.b, except MT is not required for walk platform welds used on dynamic message signs, end cap welds, and other welds determined by the Engineer. Perform MT in accordance with ASTM E709 with dry powder using the yoke method.

    UT the entire length of all CJP groove, plug, and slot welds in the structures and members listed in subsection 707.03.D.10.b.

13. **Splices and Connections.**

    a. **Shop Splices.** Bridge member web, flange, and cover plates may be shop splice provided the girder is greater than 50 feet long; however, cover plates may only contain one splice. Built-up axial member plates may be shop spliced provided the axial member is greater than 50 feet long. Obtain the Engineer's approval for the location of shop splices.

       Separate bridge member web, flange, and cover plate splices by at least one foot and separate these splices from stiffener and connection plate welds by at least one foot.

    b. **Holes for High Strength Bolts.** Punch or drill all holes. Punching holes are limited to material thickness no greater than ¾ inch for carbon steel, ⅝ inch for high-strength (low-alloy structural steel), or ½ inch for high-strength (low-alloy, quenched, and tempered

structural steel). When punching full-size holes, provide a die with a diameter that does not exceed the diameter of the punch by more than 1⁄16 inch.

When required, sub-punch or sub-drill holes 3⁄16 inch smaller and ream or drill to full size after assembling. For subpunching, provide a die with a diameter that does not exceed the diameter of the punch by more than 3⁄32 inch.

Drilling holes full size is allowed while working on the splice if all material is assembled as it will be used in the final splice assembly. When drilling assembled splices, pre-drilling one plate full-size for use as a template is acceptable.

Drilling holes full size with computer numerically controlled (CNC) equipment is allowed. Verify the accuracy of CNC drilled full size holes during assembly with all plates installed.

Match-mark all joints which have been reamed or drilled with the parts assembled. Partially assemble joints with plates attached (after faying surfaces are cured) so erecting crews do not misplace, interchange, or reverse joint parts. Match-mark in one location using dot matrix or low-stress die stamping. Show match-marking schemes on the shop drawings and obtain the Engineer's approval for mark locations.

Bridge main member bolt hole diameters must not exceed 1⁄16 inch larger than the nominal bolt diameter specified in the contract in all plies of bolted joints. Secondary member bolt hole diameter must not exceed the following:

i. 3⁄16 inch larger than 5⁄8 inch through 7⁄8 inch nominal bolt diameter;
ii. 1⁄4 inch larger than 1 inch nominal bolt diameter; and
iii. 5⁄16 inch larger than 1-1⁄8 inch and greater nominal bolt diameters.

Clean cut bolt holes without torn, ragged, burred, or crimped edges. Do not weld to fill, butter, or repair misplaced drilled or punched holes.

14. **Assembly.** Field connections of bridge main members for trusses, arches, continuous beams, plate girders, bents, towers, and rigid frames must be preassembled in the shop prior to erection to verify geometry of the completed structure or unit and to verify and prepare field splices.

Before reaming, obtain the Engineer's approval of each assembly, including camber, alignment, accuracy of holes, and fit of milled joints. Maintain a gap no greater than 3⁄8 inch between girder ends at bolted field splices.

Provide a camber diagram to the Engineer, showing the camber at each panel point of each truss, arch rib, continuous beam line, plate girder, or rigid frame. Show the camber measured in assembly on the camber diagram if shop assembly is methods 707.03.D.14.a or

707.03.D.14.d. For other shop assembly methods, show calculated camber on the camber diagram.

Use bolts for assembly of the same diameter as bolts required for erection. Use pins for assembly of the same diameter as the hole and in sufficient number to ensure accuracy.

Do not allow drifting performed during assembly of field connections to enlarge holes or distort steel. Ream under size holes to admit bolts. Do not move assemblies or disassemble a joint before drilling and reaming is complete and before providing QAI the opportunity to inspect the holes and markings.

If temporary fitting aids are proposed to be tack welded to the member, submit a plan for the Engineer to review. Do not tack weld fitting aids to the flange.

For structures up to 150 feet in length assemble using the method 707.03.D.14.a. For structures 150 feet in length and greater, assemble using the method in 707.03.D.14.b.

a. **Full Beam, Girder, Arch Rib, or Truss Assembly.** Assemble members of each continuous beam line, girder line, arch rib, truss, bent, tower, or rigid frame for structures up to 150 feet in length at one time.

b. **Progressive Beam, Girder, Arch Rib, or Truss Assembly.** Assemble three contiguous longitudinal sections of truss panel, arch section, or longitudinal member accurately adjusted for line and camber. Successive assemblies must consist of at least one "carry-over" longitudinal segment of the previous assembly, repositioned for accurate alignment (i.e. providing the advancing assembly the proper relative rotation and horizontal and vertical position), plus one or more longitudinal segments at the advancing end.

c. **Progressive Chord Assembly.** When required in the contract, follow method 707.03.D.14.b, except the holes in the truss connections are located to provide the final desired geometry. Vertical and diagonal truss panel members have connections to each truss chord made separately, based on calculated deflections, so top and bottom chords cannot be placed in a concurrent shop assembly. This assembly process requires that the truss members, when erected in a supported condition, must be forced to fit the end conditions. This condition introduces an initial reverse secondary stress that theoretically disappears when the structure carries its own weight and members become straight.

d. **Special Complete Structure Assembly.** When required in the contract, simultaneously shop-assemble all structural steel, including the diaphragms, cross frames, integral steel substructure, and floor components. Miscellaneous components are not included unless specified in the contract.

15. **Pins and Link Plates.** The contract drawings show the nominal diameter of pins. The fabricator must establish the exact diameter of the pin, show it on the shop drawings within +0 inch and −1/32 inch of the nominal diameter and then fabricate the pin to within ±0.005 inch.

    Provide stainless steel hanger pins. Finish the surface to less than 16 micro inches per inch rms on the bearing surface, and less than 125 micro inches per inch rms on the ends.

    Finish the surface on link plates to less than 125 micro inches per inch rms on cut edges and bored holes.

    Orient the longitudinal axis of the link plates and pins in the direction of rolling or forging of plates or bars.

    Do not weld on pins or link plates. Finish pin holes smooth, straight, at right angles to the axis of the member, and parallel to each other.

    Do not exceed 1/32 inch variation from the required distance from outside to outside of adjacent pin holes in tension members or from inside to inside of adjacent pin holes in compression members. Bore built-up members after welding. Drill or bore link plates in a jig or in assembled pairs.

    Drill or bore the pin hole in the web 1/32 inch ±0.005 inch, larger than the pin diameter.

16. **Bushings for Pins and Link Plates.** Prime the inside of the holes in the link plate with an organic zinc-rich primer before installing bushings. Install bushings before the primer dries. Install bushings with an interference fit of at least 0.001 inch. Provide a clearance from 0.005 inch to 0.015 inch between the inside diameter of the bushing and the finished diameter of the stainless steel pin.

17. **Bearings and Bearing Surfaces.** The fabricator may build up sole plates 3 inches thick or greater by welding together 1 ½ inch thick or greater plates.

    Bevel plate edges ¼ inch and weld with a continuous PJP groove weld along the full perimeter using the SMAW process. Plane the top and bottom surfaces of column and pedestal base plates and cap plates or flatten by pressing if the plates are less than 4 inches thick. Face member parts, contacting column and pedestal base plates, and cap plates to fit.

    Verify sole plates on beams and plate girders fully contact flanges within 1/32 inch for at least 75 percent of the projected area of the flange and sole plate. Provide structural welds around sole plates for joints not specified to be welded to seal the joint from moisture intrusion as directed by the Engineer at no additional cost. Satisfy flatness tolerances for sole plates and masonry plates by planing, heat straightening, pressing, or a combination of these methods. If planing is required on welded pedestals, complete the welding prior to planing. Planing

surfaces bearing on elastomeric bearing pads is not required. Verify planed or bored bearing surfaces meet the following roughness rating values:

a. Bridge rockers, 250 micro inches per inch rms; and
b. Pin holes and sliding bearings, 125 micro inches per inch rms,

18. **Finished Members.** Provide finished members true to the line shown on the plans and free of twists, bends, and open joints.

    Break or condition the corners of exposed steel edges and thermally cut edges by grinding or other methods approved by the Engineer before shop cleaning and coating.

    Repair damage caused by handling and shipping to the Engineer's satisfaction.

19. **Correction of Errors or Defects.** Obtain the Engineer's approval for the proposed method of correcting errors or defects in fabricated material prior to beginning the corrective work. Perform repairs in a timely manner, unless the Engineer approves delaying the work until later fabrication stages.

    Obtain written approval from the Engineer before beginning corrective work paid by the Department. Maintain an accurate record of the labor, equipment, and materials and present an itemized bill for the Engineer's review and approval. Correlate records daily with those kept by the QAI.

20. **Galvanizing Structural Steel.** Hot-dip galvanize position dowels, anchor bolts, nuts, and washers in accordance with AASHTO M232. Remove excess hot-dip galvanizing on threaded portions by centrifuging or air blasting upon withdrawal. Do not flame-chase.

    Galvanize portions of bearings not welded to the structure and other structural steel requiring galvanizing in accordance with section 716.

21. **Handling and Storing Materials.** Store structural steel material on platforms, skids, or other supports above high-water elevations. Maintain materials free of dirt, oil, or other contaminants and protect from corrosion. Pad structural steel members in storage at points of contact. Pitch trough sections to provide drainage. Support long members at frequent intervals to prevent deflection. Handle, store, and brace members in the erected position to avoid distortion, unless otherwise authorized by the Engineer.

    Protect fasteners from dirt and moisture on the project. Remove only the number of fasteners required to be installed and tightened during a working shift. Lubricant must not be removed from fasteners. Visible corrosion or contamination is a cause for rejection of the fasteners.

    Handle fabricated structural steel members and primary components of main members with clamps or plate hooks that do not leave nicks, gouges, or depressions. Repair damage to

main members using methods approved by the Engineer. Repair damage consistent with the delivery of structural steel in accordance with ASTM A6/A6M and AWS D1.5. Do not use chains or chokers for handling structural steel, unless placing a protective shield (softener) between the chain or choker and the structural steel. Minimize handling stresses on beams and girders during transportation, storage, and erection. Use a one-point pickup so overhang does not exceed the values specified in Table 707-4. Do not exceed the distances specified in Table 707-4 between hooks for a two-point pickup.

Table 707-4
Rigging Requirements

Beam Size	30 inch WF	33 inch WF	36 inch WF	Plate Girders
Overhang for One-Point or 2-Point Pickup, Max	37 ft	40 ft	42 ft	50 ft
Distance Between Hooks for 2-Point Pickup, Max	74 ft	80 ft	85 ft	100 ft

22. **Shipping.** Provide the Department with copies of the bill of lading as directed by the Engineer. Show the weights of individual members on the statements. Mark weights on the member if greater than 6 tons.

    Load, transport, and unload structural members using trucks or railcars, without stressing, deforming, or otherwise damaging members. Place a protective shield between the chain or chain binder and main members during shipping, to prevent gouging the flange edges or damaging the coating.

    Pack bolts, nuts, and washers of each size separately. Store and ship pins, small parts, and packages of bolts, washers, and nuts in clean, moisture proof boxes, crates, kegs, or barrels. Limit the gross weight of each package to 300 pounds. Provide a list and description of contents on the outside of each shipping container.

E. **Erection.**

1. **Methods and Equipment.** Before beginning work, obtain the Engineer's approval for proposed equipment and erection methods. Do not use material intended for the finished structure for erection or temporary purposes, unless otherwise shown on the plans or approved by the Engineer.

   The Engineer's approval does not relieve the Contractor of the responsibility for the safety of the method or equipment.

2. **Bearings.** Position column bases, truss and girder pedestals, shoes, and bearing plates with a full, uniform bearing on the substructure concrete. Adjust bearing plate and masonry plate locations and rocker positions to compensate for temperature at the time of erection.

3. **Falsework.** Build and remove falsework in accordance with subsection 706.03.C and subsection 706.03.O.

4. **Assembling.** Assemble parts according to the plans and approved shop drawings. Do not damage structural steel during erection. Clean rust, loose mill scale, dirt, oil or grease, and other deleterious material from bearing surfaces and surfaces in permanent contact before assembly.

   At the time of erection, coat machine finished surfaces with a high-performance synthetic polymer lubricant approved by the Engineer. Lubricate pedestal and rocker-to-sole plate surfaces and sliding metal-on-metal bearing surfaces.

   Align all parts in field splices and connections before inserting connection bolts. The Engineer may direct filling at least 10 percent of each splice connection with temporary bolts to bring the plies of steel tight before installing permanent bolts. Install permanent bolts in remaining splice locations and tighten to a snug-tight condition per subsection 707.03.E.6.c. Remove temporary bolts and replace with permanent bolts and tighten to a snug-tight condition. Tighten all permanent bolts using the turn-of-nut (TON) method per subsection 707.03.E.6.d.

   Bolts used in bottom flange field splices must be positioned with the head on the bottom side of the bottom flange and the nut on the top side of the bottom flange. Likewise, bolts in the fascia member must be positioned with the head on the outside (fascia) of the structure and the nut on the interior side of the structure.

   If field splicing girders in the air, install ⅓ of the bolts, evenly distributed over the connecting members, and snug tighten before releasing lifting devices.

   Tighten bolts in spans of continuous girders using the TON tightening method in accordance with subsection 707.03.E.6.d before casting deck concrete.

5. **Misfits.** Correct and replace misfits, errors, and damage at no additional cost to the Department. Obtain the Engineer's approval of corrective actions prior to beginning repairs. Do not force structural steel members into place.

   The Engineer must witness all repairs.

6. **High Strength Bolted Connections.** A high strength bolt assembly consists of one high strength bolt, one heavy hex nut, one hardened circular washer, and one lock washer where required. Provide a high strength bolt assembly for each hole in the connection of structural joints. Provide 5 percent more assemblies of each bolt diameter and length than required. Use the same lot combinations of high strength bolt assemblies for field assembly of structural joints as those tested and approved by the Engineer.

Install a hardened circular washer under the end of the high strength bolt assembly (head or nut) rotated during tightening. Additionally, install hardened circular washers to cover oversized holes where required in the outer plies of the structural joint.

a. **Connected Plies.** All connected plies within the grip of the bolt and any materials that are used under the bolt head or nut must be steel. Compressible materials must not be placed within the grip of the bolt. Faying surfaces and surfaces adjacent to the bolt head and nut must be free of mill scale, burrs, dirt, and other foreign material.

   All bolt holes in the plies must be aligned to allow insertion of the bolt without undue damage to the threads.

   The slope of the outer ply surfaces in contact with the bolt head and nut must be equal to or less than 1:20 with respect to a plane that is perpendicular to the bolt axis. Use beveled square or rectangular washers to compensate for slopes greater than 1:20. If the beveled washer is not hardened, install a hardened circular washer between the beveled washer and end of the high strength bolt assembly (head or nut) being rotated.

b. **Pre-Installation Bolt Tension Verification.** Pre-installation verification is required for high strength bolt assemblies to verify the TON pretensioning method results in the required minimum bolt tension. Use a tension calibrator that is calibrated annually to verify the following:

   i. Suitability of the lubricated high strength bolt assembly; and
   ii. Procedure and proper use of the TON pretensioning method.

   A representative sample of not less than three high strength bolt assemblies of each combination of diameter, length, grade, and lot to be used in the work must be verified at the site of installation in a tension calibrator to verify that the TON pretensioning method develops a pretension that is equal to or greater than that specified in Table 707-5. Perform periodic verification of high strength bolt assemblies using a tension calibrator if directed by the Engineer.

   Tighten bolts using the TON pretensioning method in accordance with subsection 707.03.E.6.d. If required because of bolt entering and wrench operation clearances, tighten by turning the bolt while preventing the nut from rotating.

Table 707-5 Minimum Pre-Installation Bolt Tension Verification[a]	
Nominal Bolt Diameter, d_b (in)	**ASTM F3125/F3125M Grade A325 (lb)**
½	12,700
⅝	20,200
¾	29,900
⅞	41,300
1	54,100
1⅛	68,100
1¼	86,500
1⅜	103,100
1½	125,500
a. Equal to 1.05 times 70% of specified minimum tensile strength of bolt rounded up to nearest hundred.	

c. **Snug-Tight Joints.** All high strength bolt assemblies must be installed with the washer positioned as required in subsection 707.03.E.6. Install bolts in all holes and compact the joint by tightening bolts systematically from the most rigid part of the joint to the free edges. The snug-tight condition is the tightness that is attained with a few impacts of an impact wrench or the full effort of person using an ordinary spud wrench to bring the connected plies into firm contact. More than one cycle through the bolt pattern is required to achieve the snug-tight joint. The Engineer will not consider re-snugging previously tightened bolts loosened by the tightening of adjacent bolts as reuse.

d. **Turn-of-Nut (TON) Pretensioning.** All high strength bolt assemblies must first be installed in accordance with subsection 707.03.E.6.c before performing the TON method. Perform the TON pretensioning method by systematically tightening bolts from the most rigid part of the joint to the free edges by rotating the nut relative to the bolt head as specified in Table 707-6. High strength bolt assemblies can be tightened by rotating either the bolt head or nut. Mark each bolt, nut, and outer ply to reference the rotation required for tightening. Prevent the part (head or nut) not turned from rotating relative to the part (head or nut) that is being turned during the tightening operation. If impact wrenches are being used to perform the TON pretensioning method then provide wrenches sufficient to tighten each bolt in approximately 10 seconds.

Do not reuse high strength bolt assemblies that have been tensioned beyond a snug-tight condition.

Table 707-6 Nut Rotation from Snug Tight Condition[a]			
Disposition of Outer Faces of Bolted Parts			
Bolt Length[b]	**Both Faces Normal to Bolt Axis**	**One Face Normal To Bolt Axis, Other Face Sloped[c]**	**Both Faces Sloped[c]**
Not more than $4d_b$	120° -0°/+30°	180° -0°/+30°	240° -0°/+45°
More than $4d_b$ but not more than $8d_b$	180° -0°/+30°	240° -0°/+45°	300° -0°/+45°
More than $8d_b$ but not more than $12d_b$	240° -0°/+45°	300° -0°/+45°	360° -0°/+45°
More than $12d_b$	The required nut rotation must be determined by actual testing in a suitable tension calibrator that simulates the conditions of steel in firm contact.		

a. Nut rotation is relative to bolt regardless of the element (nut or bolt) being turned.
b. Nominal bolt length is measured from underside of head to end of bolt, where (d_b) denotes the bolt diameter.
c. Sloped face not more than 1:20. Beveled washer prohibited.

e. **Inspection.** The Engineer will determine if bolts meet the requirements for bolt tension. Provide the Engineer with the opportunity to witness the pre-installation bolt tension verification, snug-tight installation procedures, and TON pretensioning installation procedures.

7. **Field Welding.**

a. **General Bridge Welding.** Perform bridge welding of bridge members in accordance with AWS D1.5, except as modified herein. These specifications apply for field welding to rolled and built-up flexural and axial main members and secondary members.

Perform bridge field welding using the SMAW process with E7018 electrodes unless the contract requires use of a different electrode specification and classification. Do not use GMAW or other gas shielded processes. The Engineer may approve SAW and FCAW for field welding.

Do not field weld unless otherwise shown on the plans or approved by the Engineer. Field welding requires MDOT Form 0395 to be completed and submitted for review and approval by the Engineer prior to welding. Do not start field welding before the Engineer approves the WPS. Remove weld metal splatter on adjacent base metal before blast cleaning and coating the steel using a procedure approved by the Engineer.

Determine the minimum fillet weld size for bridge welding in accordance with Table 707-2, unless a larger weld size is specified in the contract. Determine the minimum PJP groove weld size for all bridge welding in accordance with Table 707-3, unless a larger weld size is specified in the contract.

b. **General Structural Steel Welding.** Perform structural steel welding in accordance with AWS D1.1, except as modified herein. These specifications apply to field welding to structures and members listed in subsection 707.03.D.10.b.

Perform field welding using the SMAW process with E7018 electrodes unless the contract requires use of a different electrode specification and classification. Do not use GMAW or other gas shielded processes. The Engineer may approve SAW and FCAW for field welding.

Do not field weld unless otherwise shown on the plans or approved by the Engineer. Field welding requires MDOT Form 0394 to be completed and submitted for review and approval by the Engineer prior to welding. Do not starting field welding before the Engineer approves the WPS. Remove weld metal splatter and arc strikes on adjacent base metal before blast cleaning and coating the steel using a procedure approved by the Engineer.

Determine the minimum fillet weld size for structural steel welding in accordance with AWS D1.1. Determine the minimum PJP groove weld size for structural steel welding in accordance with AWS D1.1.

c. **Welder Endorsements.** Welding personnel including welders, welding operators, and tack welders, must be qualified in accordance with AWS D1.5 for bridge welding and AWS D1.1 for structural steel welding. Additional performance testing is required in accordance with the current MDOT *Welder Qualification Program* under the supervision of the QAI. Welding performance endorsements from other agencies will not be accepted.

The period of effectiveness for field welding personnel endorsed through MDOT's *Welder Qualification Program* is two years unless welding personnel are not engaged in a welding process for at least six months or a specific reason exists to question the welder's ability. The Engineer may require a confirming performance test during the progress of the work. Welding personnel must have their welding endorsements (AWS and MDOT) and MDOT approved welding plan available at all times. Failure to produce the welding endorsements and plans while welding on a MDOT project will result in welding privileges being removed from the project until acceptable information is provided to the Engineer. The Department considers welding personnel qualified on high-strength steel (low-alloy structural steel) to also be qualified to weld carbon steel.

d. **Welding Requirements.** Prepare base metal for welding in accordance with Clause 3 of AWS D1.5 for bridge welding or Clause 5 of AWS D1.1 for structural steel welding.

Surfaces and edges to be welded must be smooth, uniform, and free from fins, tears, cracks, and other discontinuities. Surfaces to be welded and surfaces adjacent to a weld must also be free from loose or thick scale, slag, rust, moisture, grease, and other foreign material that would prevent proper welding. Grind joints before field welding to remove pitting and irregularities.

The parts to be joined by fillet welds must be brought into as close contact as practicable; however, when the joints specified in the contract must have a tight fit or mill to bear then specific joint root openings in accordance with Clause 3 of AWS D1.5 for bridge welding or Clause 5 of AWS D1.1 for structural steel welding is required. If the joint root opening exceeds $\frac{1}{16}$ inch (not allowed for joints specified to have a tight fit or mill to bear) then increase the fillet weld leg equal to the joint root opening. Do not weld if the joint root opening exceeds $\frac{3}{16}$ inch.

Transition weld profiles by grinding stop-start areas or other irregularities.

Do not perform field weld when the ambient air temperature falls below 40 °F or during periods of precipitation such as rain, snow, or fog that leaves condensation on the steel, unless heating and enclosing the area as approved by the Engineer.

Store and use filler metal for bridge welding and structural steel welding in accordance with AWS D1.5 and AWS D1.1, respectively. Dry all electrodes in an oven at a temperature of at least 500 °F for at least 2 hours before use unless from a hermetically sealed container. Store the electrodes in a hot box at a temperature of at least 250 °F after drying. Use electrodes within 2 hours of exposure to the atmosphere or redry as described above. Do not redry electrodes more than once. Do not use electrodes that have been wet.

Preheat surfaces for welding 3 inches in every direction from the weld. Before welding, preheat surfaces to at least 250 °F for base metal no greater than 1½ inches thick. For base metals from 1½ inches thick to 2½ inches thick, preheat to at least 300 °F. If welding on plates greater than 2½ inches thick, preheat to at least 400 °F.

e. **Nondestructive Testing of Bridge Welds.** NDT of bridge welds is required in accordance with AWS D1.5, except as modified herein. Provide labor, equipment, and materials for testing as specified in the contact. The Engineer will review the NDT equipment, materials, and procedures and will verify that the NDT, including VT, has been performed in accordance with the contract. Do not perform NDT before the Engineer is present. Provide the Engineer with NDT personnel certifications prior to starting the inspections. The Engineer must witness NDT.

Personnel certified as Level II in accordance with the ASNT, *Recommended Practice No. SNT-TC-1A* must perform PT, MT, UT, and RT tests. VT must be performed by a CWI on

the entire length of all welds. Clean welds and base metal, as required, before performing NDT.

PT both ends of all CJP and PJP groove welds in accordance with ASTM E165/E165M.

MT the entire length of all fillet welds in accordance with AWS D1.5, except as modified herein. Perform MT in conformance with ASTM E709 with dry powder using the yoke method.

UT the entire length of all CJP groove, plug, and slot welds.

Repair cracked welds or welds the Engineer determines are unacceptable. Perform NDT of the base metal after the removal of weld metal or portions of the base metal as directed by the Engineer. Repair welds in accordance with AWS D1.5. Perform NDT of repaired welds before the Engineer's acceptance. Repair and perform NDT of welds at no additional cost to the Department.

f. **Nondestructive Testing of Structural Steel Welds.** NDT of structural steel welds is required as specified in 707.03.E.7.e, except all references to AWS D1.5 are to be replaced with AWS D1.1.

g. **Welding Falsework, Form Support, and Accessories.** Do not weld falsework, form supports, and accessories to structural steel.

h. **Shear Developers.** Stud application qualification requirements, production control, and inspection requirements must be in accordance with Clause 7 of AWS D1.5. Steel studs must be welded with automatically timed stud welding equipment.

At the time of welding, the studs and base metal to which the studs are to be welded must be free of rust, mill scale, paint, galvanizing, moisture, oil, and other deleterious matter that would adversely affect the welding operation. Repair studs without a full 360 degree fillet weld by adding a $\frac{5}{16}$ inch fillet weld using the SMAW process to replace missing welds. Repair of welds must be performed by a welder endorsed in accordance with subsection 707.03.E.7.c.

707.04. Measurement and Payment.

Pay Item	**Pay Unit**
Structural Steel, Rolled Shape, Furn and Fab	Pound
Structural Steel, Rolled Shape, Erect	Pound
Structural Steel, Plate, Furn and Fab	Pound
Structural Steel, Plate, Erect	Pound
Structural Steel, Mixed, Furn and Fab	Pound
Structural Steel, Mixed, Erect	Pound

Bearing, Elastomeric, __ inch ..... Square Inch
Shear Developers (Structure Identification) ..... Lump Sum
Bushing ..... Each

A. **Structural Steel.** The Engineer will measure structural steel by the calculated weight of metal in the finished structure, excluding filler metal in welding, as shown on the working drawings. The Engineer will calculate the weight using the rules and assumptions specified in this subsection.

Unless otherwise required, the following metal weights apply:

1. Steel — 0.2833 pound per cubic inch;
2. Cast iron — 0.26 pound per cubic inch;
3. Bronze — 0.315 pound per cubic inch; and
4. Lead — 0.411 pound per cubic inch.

The Engineer will calculate the weights of rolled shapes and plates incorporated in the finished work on the basis of nominal weights and dimensions, as shown on the approved shop drawings, deducting for copes, cuts, and holes, except those for high strength bolts.

The Engineer will include the total calculated weight of bolts, nuts, and washers in the finished work in the weight of structural steel.

The Engineer will calculate the weight of castings from the dimensions shown on the approved shop drawings with an addition of 10 percent for fillets and overrun.

The Engineer will not make allowance for galvanizing, optional splices, lifting lugs, shop coating, or excess bolts in the calculated weight.

The Engineer will not include the weight of lifting lugs in the calculated weight for structural steel. The unit prices for structural steel pay items include the cost of providing, welding, and removing the lugs.

B. **Welding.** The Department will not pay for shop or field welding and subsequent NDT of **Structural Steel, Furn and Fab** and **Structural Steel, Erect** pay items.

All costs associated with shop or field welder endorsement to the MDOT *Welder Qualification Program* testing including, but not limited to, providing the specimen test plates, completing performance testing, and submittal of qualification specimen will be at the Contractor's expense. The Department will perform testing (cut, machine, test, and report out) of specimens at no cost to the Contractor for the first test; however, the Contractor is responsible for the cost of performing re-testing if the first test specimen fails for a specific test.

C. **Plant Certification.** The Department will not allow additional compensation for costs incurred in the certification of structural steel plants or claims by the Contractor for delays and inconvenience attributed to certification requirements.

D. **General.** The unit prices for **Structural Steel, Erect** pay items include the cost of installing and removing temporary bolts as directed by the Engineer. The unit price for **Structural Steel, Erect** pay items include the cost of field drilling.

The unit prices for **Structural Steel, Furn and Fab** pay items include the cost of shop cleaning and coating the steel.

The Engineer will measure **Bearing, Elastomeric**, of the size required, by area, with no deductions for holes. The unit price for **Bearing, Elastomeric** includes the cost of steel laminates bonded to the elastomeric bearing.

The Engineer will measure **Shear Developers** as a unit for each structure. The unit price for **Shear Developers** includes the cost of providing studs, cleaning the surface by grinding, and welding studs to the girder flanges.

The unit price for **Bushing** includes the cost of priming the inside holes in the link plate and providing and installing the bushing.

The cost of supplying, installing, and removing temporary bolts at field splice connections when this work is required by subsection 707.03.D is included in the unit price for relevant pay items.

Section 708. STRUCTURAL PRESTRESSED CONCRETE CONSTRUCTION

708.01. Description. This work consists of fabricating, furnishing, delivering, and erecting prestressed structural precast concrete.

PCI certification is required for the prestressed structural precast concrete fabrication work listed below:

A. Category B2 - Prestressed Miscellaneous Bridge Products (Non-Superstructure). Any precast, prestressed elements except for superstructure beams.

B. Category B3 - Prestressed Straight-Strand Bridge Beams (Superstructure). All precast, prestressed superstructure elements using straight pretensioning or post-tensioning strands such as box beams, I-girders, bulb-tee beams, solid slabs, segmental box beams, and all products covered in B2.

C. Category B4 - Prestressed Deflected-Strand Bridge Beams (Superstructure). Precast concrete bridge members that are reinforced with deflected pretensioning or post-tensioning strand. Included are box beams, I-girders, bulb-tee beams, solid slabs, segmental superstructure and all products in B2 and B3.

Immediately correct findings that do not conform to PCI plant certification. Provide a copy of the PCI certificate of conformance to the Engineer before beginning production. If requested, make all plant certification annual and special immediate audit findings and audit dates available to the Engineer for all fabrication plants performing work on the project.

708.02. Materials. Provide materials in accordance with the following:

Cement 901
Coarse Aggregate 6AA, 17A 902
Fine Aggregate 2NS 902
Admixtures and Curing Materials for Concrete 903
Fly Ash 901
Bar Chairs and Wire Ties 905
Prestress Strand 905
Post Tensioning Tendons 905
Steel Reinforcement 905
Steel Welded Wire Reinforcement 905
Structural Steel 906
Water 911
Mortar and Grout 1005

Provide 6AA or 17A natural coarse aggregate; however, physical properties must meet 6AA in accordance with section 902, except aggregate must have a maximum freeze-thaw dilation of

0.010 percent per 100 cycles based on testing of 6AA gradation. Provide 2NS fine aggregate. Do not use slag aggregate.

Provide rigid monolithic polypropylene, high-density polyethylene or other polymer plastic closed tube debonding material for prestressing strand with an outside diameter of 0.725 inches and a wall thickness of 0.04 inches. Do not use tubing with longitudinal slits. The tubing must not be reactive with the concrete or steel as approved by the Engineer. The material must have sufficient strength and durability to resist damage and deterioration during fabrication, transport, storage, installation, concrete placement, and tensioning. Do not use flexible polymer plastic split-sheathing.

Do not use prestressing strand without identification. Actual prestressing strand elongation and force must be equal to or no more than 5 percent greater than the theoretical strand elongation and force.

708.03. Construction.

A. **Shop Drawings.** Prepare shop drawings of fabrication details in accordance with subsection 104.02. Do not use contract plans instead of shop drawings. Do not start fabrication before the Engineer approves the shop drawings. Provide the quality assurance inspector (QAI) with a hardcopy of the approved shop drawings.

B. **Shop Inspection.** The Department will provide a QAI to perform shop inspection for structural prestressed concrete and similar materials required to be accepted based on "Fabrication Inspection" according to the contract. The fabricator must establish and maintain an effective quality control program in accordance with PCI standards and the contract. The Department's shop inspection is not a substitute for the fabricator's quality control program.

1. **Fabrication Notification.** Provide the Engineer with a fabrication start date at least 7 days before beginning fabrication.

   If the fabricator suspends work for a period in which the Department's QAI leaves the fabrication plant, provide the Engineer with a fabrication start date at least 7 days, or as approved by the Engineer, before restarting fabrication.

2. **Prefabrication Meeting.** A prefabrication meeting will be held between the Engineer and fabricator before fabrication begins. The fabricator must provide the following representatives: plant manager and quality control manager; engineering and production personnel as appropriate; and, if applicable, subcontractor representatives. The fabricator must review all aspects of the project during the prefabrication meeting to avert problems that may complicate or delay fabrication and provide the Engineer with the proposed schedule of fabrication and delivery of completed elements.

3. **Inspection Facilities.** Provide facilities for inspection of material and workmanship at no additional cost to the Department in accordance with subsection 809.03.A, except as follows:

   a. Provide an office close to the work with at least 120 square feet of floor space and shared by no more than one other QAI. The Engineer may approve sharing larger offices with additional QAIs;
   b. Provide a parking space for the QAI next to the office; and
   c. Include a desk, chair, locker, plan rack, secure storage space for testing equipment, and high-speed broadband internet service.

4. **QAI Authority.** The QAI has the authority to inspect in accordance with subsection 104.01.E. If an issue arises that the QAI cannot resolve, the Engineer will arrange a meeting with the QAI, Contractor, and fabricator to resolve the issue.

5. **Acceptance.** The Engineer will base acceptance of prestressed structural precast concrete material on the two-part process described in Structural Fabrication Quality Manual. The Engineer may reject fabricated members at the project site that the QAI accepted at the shop due to damage or deficiencies. The Engineer will evaluate the damage or deficiencies on a case by case basis if the fabricator submits a nonconformance report (NCR) requesting the Engineer's review.

C. **Furnishing and Fabricating.**

1. **Equipment.**

   a. **Forms.** Use metal forms. Forms must meet the requirements of subsection 706.03.D. Wood forms may be used for bulkheads, voids, and keyways.

   b. **Strength Test Specimen Molds.** Use specimen molds for making test specimen in accordance with ASTM C470/C470M.

   c. **Curing Tank.** Use a Department-approved curing assembly, consisting of a water tank equipped with thermostatic controls. Maintain lime-saturated water at 70 °F ± 5 °F. Provide a tank sized to contain the required number of 28-day test specimens.

   d. **Compression Testing Machine.** Use a compression testing machine in accordance with ASTM C39/C39M. Submit a calibration certificate no more than 12 months old at any time during fabrication.

   e. **Scales.** Use a calibrated scale. Submit a calibration certificate no more than 6 months old for weight scales and 3 months old for volumetric scales at any time during fabrication and whenever there is reason to question accuracy.

f. **Stressing Jacks.** Submit a calibration certification no more than 12 months old at any time during fabrication and whenever there is reason to question accuracy.

2. **Void Boxes, Inserts, and Attachments.** Design and construct void boxes, inserts, and attachments to withstand forces imposed during fabrication without bulging, sagging, collapse, or other deformation. Fasten void boxes, inserts, and attachments to maintain the proper position during concrete placement and consolidation. Place weep-holes to provide drainage for voids. Puncture weep holes immediately after removal from casting bed.

3. **Design and Proportioning of Concrete Mixtures.** Design a concrete mixture meeting the following requirements:

   a. Air content of 5.5 percent to 8.0 percent;
   b. 28-day compressive strength as shown on the plans;
   c. Slump from ¾ inch to 2½ inches if not using water-reducing or retarding admixtures;
   d. Slump no greater than 4 inches if using a Type A or Type D chemical admixture;
   e. Slump no greater than 6 inches if using a Type MR chemical admixture;
   f. Slump no greater than 8 inches if using a Type F or Type G chemical admixture; and
   g. At least 564 pounds of cementitious material per cubic yard of concrete.

   Provide cementitious material with fly ash content no greater than 25 percent of the total weight of the cementitious material. Provide slag cement content no greater than 40 percent of the total weight of the cementitious material. If using fly ash and slag cement in the same mixture, do not exceed 15 percent fly ash and 25 percent slag cement measured as the total weight of the cementitious material.

4. **Concrete Strength.** The Engineer will base acceptability of concrete strength on the results of compressive strength test specimens using standard 6 inch by 12 inch or 4 inch by 8 inch cylinders. Mold, store, and test compressive strength test specimens at no additional cost to the Department.

   a. **Molding and Curing.** Mold and cure compressive strength test specimens in accordance with ASTM C31/C31M, except as modified by this subsection. Make at least six strength test specimens from concrete representing each sublot according to the contract. Make one-third of the strength test specimens from the beginning one-third of the sublot pour, one-third of the strength test specimens from the middle one-third of the sublot pour, and one-third of the strength test specimens from the final one-third of the sublot pour.

      Leave strength test specimens with the element in the same curing enclosure until stripping the element. At that time, remove the 28-day strength test specimens from molds and place in a water curing tank until testing. Store remaining work progress specimens with the element, or in an alternate location exposed to the same environmental conditions as the element until testing.

The fabricator may mold and cure alternate strength test specimens to determine concrete strength at less than 28 days. Alternate strength test specimens must be molded and cured with the element, or in an alternate location exposed to the same environmental conditions as the element until testing.

b. **Testing and Acceptance.** Conduct compressive strength tests in the Engineer's presence. Test specimens in accordance with ASTM C39/C39M, except test compressive strength test specimens in a moist condition resulting from the required curing conditions.

Consecutively test a set of three strength test specimens obtained by taking one strength test specimen from each of the three sublot sample locations to determine concrete strength. Two of the three specimens must meet the specified concrete strength at release requirement, and the third specimen must meet or exceed 95 percent of the specified concrete strength at release requirement. If strength test specimens do not meet the specified requirement then re-test. Re-testing consists of testing a set of three strength test specimens obtained by taking one strength test specimen from each of the three sublot sample locations.

Alternate strength test specimens must be tested before the end of the 28-day curing period. Consecutively test a set of three strength test specimens obtained by taking one strength test specimen from each of the three sublot sample locations to determine concrete strength. Alternate strength test specimen results will be accepted, in place of the 28-day strength test results, if alternate strength test specimen results equal or exceed the specified 28-day concrete compressive strength.

If alternate strength test specimen results do not meet or exceed the 28-day concrete compressive strength requirements, then continue curing remaining 28-day strength test specimens for the full 28-day period. Consecutively test a set of three strength test specimens obtained by taking one strength test specimen from each of the three sublot sample locations.

Do not ship the prestressed element before strength test specimen results equal or exceed the specified 28-day concrete compressive strength.

The 28-day concrete compressive strength must meet the following conditions:

i. The average of the compressive strength of the three strength test specimens, where a test specimen is obtained from each of the three separate sublot sample locations, equals at least the required minimum 28-day concrete compressive strength; and
ii. At least two of three strength test specimens meet the required minimum 28-day concrete compressive strength and the third specimen exhibits at least 60 percent of the required minimum 28-day concrete compressive strength.

If the 28-day concrete compressive strength test does not meet the criteria stated above, then the Engineer may either reject the prestressed element represented by the tests or determine if the concrete has sufficient structural strength. If the Engineer determines the concrete has sufficient structural strength then the unit price for the pay item and quantity represented will be prorated based on Formula 708-1:

$$A = \frac{S_t}{S_r} \times U \qquad \text{Formula 708-1}$$

Where:

A = The adjusted unit price,

S_t = Tested strength,

S_r = Required strength, and

U = Unit price.

5. **Steel Reinforcement and Prestressing Strand.** Tie uncoated steel reinforcement with wire ties. Tie epoxy coated steel reinforcement with epoxy coated wire ties. Do not weld steel reinforcement.

   Prestressing strand must be free of oil, dirt, paint, corrosion, and deleterious material that prevents bonding between strands and concrete. Do not use a reel or pack of strand when one or more wires in the strand show a coating of adherent rust that light rubbing cannot remove. Do not use strand that contains adherent rust, pits visible to the naked eye, kinks, bends, nicks, or other defects. Cover prestressing strand stored outside with waterproof tarps and block above the ground to prevent contact with soil and water. Do not use strand without identification. Actual strand elongation and force must be equal to or no more than 5 percent greater than theoretical strand elongation and force.

6. **Structural Steel.** Hot-dip galvanize structural steel in accordance with AASHTO M111 and hot-dip galvanize position dowels in accordance with AASHTO M232.

7. **Miscellaneous Steel.** Galvanize carbon steel items cast into the structural concrete elements to facilitate bridge construction including, but not limited to, forming, finishing, false decking, safety tie-offs, or any other temporary works in accordance with AASHTO M111, AASHTO M232, ASTM B633 Service Condition 1, ASTM B695, or epoxy coat in accordance with ASTM A775/A775M.

8. **Welding.** Welding must be in accordance with PCI certification requirements.

9. **Strand Debonding.** If strand debonding is required, furnish and install rigid polymer material around prestressing strands. Place the debonding material at the locations specified and to

the lengths shown on the plans. Seal the ends of the debonding material with duct tape or other materials approved by the Engineer to prevent the intrusion of cement paste or water within the debonded regions of the strand.

10. **Placing Concrete.** Place concrete in accordance with subsection 706.03.H and as modified as follows:

    a. External vibrators may be used;
    b. Remove all water, snow, and ice from forms before placing concrete;
    c. Protect fresh concrete and forms from rain, snow, and ice during any interruptions of casting operations;
    d. Maintain concrete temperature between 45 °F and 90 °F, but as close to 70 °F as practical during placement; and
    e. Do not hold vibrators against forms or reinforcing steel, and do not use them for flowing or spreading concrete. Do not disturb partially hardened concrete.

11. **Cold Weather Precautions**. Protect concrete to prevent damage from cold weather. Replace the prestressed element at no additional cost to the Department if concrete becomes frozen.

    Before placing concrete in forms, construct an enclosure around the forms to assist with maintaining the specified temperatures. Arrange heating and the enclosure to allow removal of a portion of the enclosure during placement and finishing of concrete without interrupting heating.

    Provide uniform forced air, radiant heat, or steam heat in the enclosure. Vent the heating system to prevent exposure to carbon dioxide and carbon monoxide exhaust gases during concrete placement and curing. Before placing concrete, preheat reinforcing steel and form surfaces to temperatures between 40 °F and 75 °F.

    During placement of concrete and up to the concrete initial set, operate the heating system to maintain an air temperature in the enclosure between 40 °F and 75 °F.

12. **Curing Elements.** Provide curing enclosures to allow air or steam circulation around exposed portions of the concrete. Cure concrete at temperatures between 70 °F and 150 °F until concrete attains the release strength shown on the approved shop drawings.

    Maintain the required temperature during the curing period with steam or radiant heat. Apply steam or radiant heat after concrete reaches initial set in accordance with ASTM C403/C403M, without damaging the concrete.

    Do not direct steam or radiant heat at the concrete or the forms, which causes localized high temperatures. During initial application of steam or radiant heat, increase the concrete temperature in the curing enclosure by no greater than 36 °F per hour until reaching the curing

temperature. Maintain the maximum curing temperature within the enclosure until concrete reaches the desired temperature and strength. Do not exceed a maximum concrete temperature of 150 °F during the curing cycle. Upon curing completion, reduce the concrete temperature in the enclosure at a rate no greater than 50 °F per hour. The cooling rate must continue until the concrete temperature is 40 degrees or less above outside ambient temperature.

Provide recording thermometers for steam or radiant heat curing, capable of showing the time-temperature relationship in the curing enclosure from the time of concrete covering to transfer of prestress. Use at least two recording thermometers per product line, at locations approved by the Engineer, to monitor the concrete and the curing rate. Graph time-temperature documentation and provide a copy to the Engineer for evaluation.

13. **Workmanship.**

a. **Concrete Defects.** Remove concrete fins and irregular projections from surfaces immediately after removing forms. Patch air holes larger than ¾ inch in diameter and ⅜ inch in depth with Type R-2 mortar. Keep surfaces saturated with water until pointed and trued with mortar. For fascia beams, use a mortar mixture composed of ⅔ Type 1 cement and ⅓ white cement, or as approved by the Engineer, to closely match the beam. Restore consistency by reworking, but not by re-tempering.

   Honeycombing, voids, and cracks are cause for rejection. The Engineer will evaluate them on a case by case basis if the fabricator submits an NCR for the Department's review.

b. **Finishing I-Beams.** Smooth finish the outer 1 inch of the top surface of the I-beam. Rough finish remaining I-beam top surfaces to provide a ¼-inch surface texture.

c. **Finishing 1800 and Bulb-Tee Beams.** Smooth finish the outer 6 inches of beam top surfaces. Rough finish remaining beam top surfaces to provide a ¼-inch surface texture. Clean the outer 6 inches of the top surface and apply a debonding compound in accordance with the manufacturer's recommendations. Prevent compound from spreading over beam flanges or toward the center of the beam. Remove compound that exceeds the 6 inch boundary before it cures. Use solvents approved by the debonding compound manufacturer.

d. **Finishing Box Beams.** Smooth finish the outer 1 inch of the box beam top surface. Rough finish remaining box beam top surfaces to provide a ¼-inch surface texture unless otherwise required. If hot mix asphalt overlay is required, provide a wood float finish on the top surface.

e. **Bearing Surfaces.** Fabricate bearing surfaces to meet a flatness tolerance of ⅛ inch over 12 inches.

14. **Tolerances.** The Engineer will evaluate beams that do not conform to the dimensional tolerances specified in Table 708-1.

Table 708-1 Dimensional Tolerances for Beams	
Beam Type	**Tolerance**
Length of I-Beams,1800 and Bulb-Tee Beams	±¼ in/25 ft, ±1 in max
Length of Box Beams	±¾ in
Width of I-Beams,1800 and Bulb-Tee Beams	+½ in, -⅛ in
Width of Box Beams	±½ in
Height of I-Beams, 1800 Beams, Bulb-Tee Beams, and Box Beams	+¼ in, -⅛ in
Camber Deviation From Design Value (Measured Within 24 h of Strand Release)	±⅛ in/10 ft
Thickness of Top Slab of Box Beam	+½ in, -¼ in
Length of I-Beam End Blocks	+2 ft, -0 in
Sweep of I-Beams, 1800, and Bulb-Tee Beams (Horizontal Deviation of Centerline from a Straight Line Between Ends Measured at Both Top and bottom)	¼ in/10 ft
Sweep of Box Beams (Horizontal Deviation of Centerline from a Straight Line Between Ends Measured at Both Top and Bottom)	⅜ in up to 60 ft, ½ in over 60 ft
Vertical Deviation of Side Forms Between Top and Bottom of Beam	≤¼ in from plan location
Prestress Strand	≤¼ in from plan location
Location of Conduit for Transverse Post Tensioning	≤½ in from plan location
Location of Holes for Position Dowels (I-beams, Bulb-Tee and 1800 Beams)	≤½ in from plan location
Location of Holes for Position Dowels Box Beams	≤1 in from plan location

15. **Stress Transfer.** Do not transfer prestress force to the concrete element until the concrete strength, as indicated by strength test specimens, meets the specified prestress concrete compressive strength at release. Cut or release prestressing strand to minimize lateral eccentricity of prestress.

    Flame cut the prestressing strand at least 6 inches away from the end of the element. Cut strands flush with the concrete surface using mechanical means and cover ends and depressions around prestressing strand ends with asphaltic material approved by the Engineer.

16. **Handling, Storage, and Transporting.** Handle and store prestressed elements to prevent damage. The following special requirements for beams apply:

    a. Keep beams upright.
    b. Use lifting loop devices shown on the plans, unless the Engineer approves alternate lifting devices and procedures. Apply equal loads to each pair of lifting devices.
    c. Support stockpiled beams across the full width on two battens that are at least 4 inches wide. Do not supporting beams at more than two points.
    d. Use battens to hold beams off the ground over the full length. Place battens in from the beam ends no greater than 1½ times the depth of the beams, or 3 feet, whichever is less.

For skew beams, measure the distance along the centerline of the beam. Place battens to support stacked beams, one above the other, along the same vertical plane, at each end of the beams.

e. Support beams during transport the same as stockpiled beams, except trucks with two rear bolsters may be used. If truck bolsters are worn, use wood shingles to give bearing. Place wood blocks under chains to hold beams in place on the trucks.

D. **Erection of Prestressed Beams.**

1. **Box Beams.** Shim beam bearing pads during erection to provide full bearing contact with the bottom of the beam. Place seal washers, or other devices meeting the Engineer's approval, between the beams at the transverse conduit holes. After setting beams, drill position dowel holes into bridge seats through holes provided in each beam end. Insert dowels.

   At expansion bearings, fill position dowel holes with hot-poured rubber-asphalt type filler to at least 3 inches above the position dowels. Fill the remainder of the hole with Type H-1 grout. Fill holes at fixed bearings with Type H-1 grout.

   After setting beams in their final position, clean the beams with water, and mortar longitudinal joints and the surfaces between beams. Use Type R-2 mortar with a slump of 5 inches and place when the air temperature rises above 40 °F. Fill spaces between beams full-depth. Rod the mortar into the space to form a tight, solid joint. Cure mortar for 48 hours. After mortar cures, post-tension the deck transversely. Tension tendons to the force required, except do not exceed the yield stress of the material.

   After post-tensioning, clean the annular space between the tendon and hole by flushing with water. Remove water with compressed air. With the grouting vent open at one end of the hole, inject Type E-1 grout under pressure at the other end. Continue injecting grout until grout comes out through open vents. Close open vents while maintaining grout pressure. Gradually increase pressure to at least 50 psi and hold for 15 seconds. Close the inlet valve. Remove lifting devices.

2. **I-Beams, 1800 Beams, and Bulb-Tee Beams.** Place beam bearing pads over the position dowel and shim to provide full bearing contact with the bottom of the beam. Position beams on the substructure and rigidly block them in place before erecting steel diaphragms or beginning deck and concrete diaphragm forming. Remove lifting devices.

708.04. Measurement and Payment.

Pay Item	**Pay Unit**
Prest Conc Deck, __ inch	Square Foot
Post Tensioning (Structure Identification)	Lump Sum
Prest Conc Box Beam, Furn, __ inch	Foot

Prest Conc Box Beam, Erect, __ inch ..... Foot
Prest Conc I Beam, Furn, __ inch ..... Foot
Prest Conc I Beam, Erect, __ inch ..... Foot
Prest Conc 1800 Beam, Furn ..... Foot
Prest Conc 1800 Beam, Erect ..... Foot
Prest Conc Bulb-Tee Beam, Furn, __ inch by __ inch ..... Foot
Prest Conc Bulb-Tee Beam, Erect, __ inch by __ inch ..... Foot

The unit prices for **Prest Conc, Erect** pay items include the cost of position dowels, shimming to provide full bearing contact, bracing and blocking.

The Department will pay for prestressed concrete box beams as **Prest Conc Deck** when the space between adjacent box beams is filled with grout. The Engineer will measure **Prest Conc Deck** based on the nominal overall length of the beams, multiplied by the overall plan width. Plan width is the sum of the widths of the beams plus the sum of the spaces between beams.

The Engineer will measure spread prestressed concrete box beams as **Prest Conc Box Beam, Furn, __ inch**, and **Prest Conc Box Beam, Erect, __ inch**.

The Engineer will measure **Prest Conc, Erect** and **Prest Conc, Furn** pay items based on the nominal length of the beams. The unit prices for **Prest Conc I Beam, Furn, __ inch**, **Prest Conc 1800 Beam, Furn**, and **Prest Conc Bulb-Tee Beam, Furn, __ inch by __ inch** include the cost of debonding the beam flange.

The Department will not allow additional compensation for costs incurred in the certification of prestressed concrete plants, or claims by the Contractor for delays or costs associated with prestressed concrete fabrication plant certification.

Section 709. TIMBER STRUCTURES

709.01. Description. This work consists of providing, fabricating, and placing structural timber, lumber, timber piling, hardware, castings, and other accessories in structures consisting entirely, or in part, of timber.

709.02. Materials. Provide materials in accordance with the following:

Structural Steel 906
Miscellaneous Metals 908
Hardware 908
Structural Timber and Lumber 912
Timber Piles 912
Preservative Treatments 912

709.03. Construction.

A. **Storage of Materials.** Store lumber and timber to prevent contamination from dirt and water.

Closely stack treated material to prevent long timbers or pieces with small cross sections from sagging or becoming crooked. If the Engineer directs, cover the stack with a layer of tarpaper, or equivalent, and at least a 1-inch layer of sand or earth to protect the stack from long exposure to direct sunlight or possible fire hazard.

B. **Workmanship.** Drive nails and spikes to set the heads flush with the surface of the wood. Do not make deep or frequent hammer marks in surfaces or edges of timbers.

Tighten bolts to draw all fastened parts together. Workmanship on metal parts must be in accordance with subsection 707.03.

C. **Framing and Placing Treated Timber and Piling.**

1. **Handling.** Avoid damaging the edges of timbers or exposing untreated wood. Do not use peavies, cant hooks, timber dogs, or other pointed tools on treated timber. Use clamps on timber or piling to support staging or other construction facilities. Temporary bolting, spiking, or nailing of treated timbers is not allowed.

2. **Framing and Boring.** Cut, frame, and bore treated timbers as close to plan dimensions as possible before treatment. Cut and frame lumber and timber so the joints will have even bearing over the entire contact surfaces.

   Do not shim in making joints, unless approved by the Engineer. Open joints are not allowed.

   If the Engineer allows the use of shims, use pressure treated timber shims.

Bore holes for hardware in accordance with Table 709-1.

Table 709-1 Hardware Hole Sizes	
Hardware	**Hole Size**
Round Driftpins and Dowels	1/16 in < diameter of the pin or bolt
Square Driftbolts or Dowels	Equal to the smallest dimension of the bolt or dowel
Machine Bolts and Rods	1/16 in > the diameter of the bolt or rod
Lag Bolts	≤ the body of the bolt at the root of the thread

3. **Pile Driving.** Provide and drive piling for timber construction in accordance with section 705.

4. **Sills.** Splice sills only as approved by the Engineer. Bed sills as shown on the plans. If placing sills directly on the foundation soil, provide a continuous firm and uniform bearing for the full length of the sill and carefully tamp in position with backfill material. If required, construct a mortar bed to ensure a uniform and even bedding on hard foundation soil, using a 1:2 mix of cement and sand. Spread the mortar so it is at least 3 inches thick under the full bearing area of the sill, and embed the sill in the mortar 1 inch. Bed grillages or mats to allow uniform bearing of sills. Finish the top surface of concrete pedestals smooth and to a single plane to provide uniform and even bearing for sills or posts. Size sills to a single plane at the bearings of posts.

5. **Field Treatment.** Trim and coat field cuts, except pile cutoff; daps; field bored holes; and abrasions in treated piles, lumber, and timber in accordance with subsection 912.03.

   Coat with at least two coats of preservative allowing at least 2 hours between applications. After cut-off, treat the tops of the treated timber piles, in accordance with subsection 912.03. Apply three coats of preservative in accordance with the manufacturer's recommendations. Plug unfilled holes, after treating, with preservative treated plugs.

6. **Caps.** Size caps and bring them to a uniform thickness and even bearing on piles or posts. Place the side with the most sap wood, downward. Fasten caps to posts or piles with the drift bolts extending an equal distance into cap and post or pile.

   After installing the caps, trim portions of the pile extending beyond the pile caps to drain off water, and treat in accordance with subsection 709.03.C.5.

7. **Posts.** Saw posts to the required length for their position (vertical or batter) and to even bearing on the cap and sill.

8. **Braces.** Frame and fasten sash and sway bracing, and longitudinal bracing to piles or posts. To accommodate variation in the size of piles, use filling pieces between braces and the piles of a bent, and securely fasten and face to obtain bearing against piles. Fit braces from the

bottom, and cut to length at the top. Treat the cut surface in accordance with subsection 709.03.C.5.

9. **Stringers.** Size stringers at bearings to a uniform depth and place in position so knots near edges will be in the top portion of the member; otherwise, turn the edges with the most sapwood down. Lap interior stringers to take bearing over the full width of the cap or floor beams. Frame cross bridging between stringers to a full bearing against the sides of the stringers and nail in place.

10. **Floor Plank.** Floor planks must be at least 10 inches wide. Plane base plank and plank for single plank floors on one side and one edge (S1S1E) and closely lay them with the surfaced side down. The surface or top course plank must be surfaced on four sides (S4S). Stagger joints in base plank or surface plank. Nail base plank at both edges at all points of support. Nail surface or top course plank at both edges at intervals no greater than 9 inches. Provide nails or spikes with a length equal to twice the thickness of the material through which they are driven. Cut planks to a neat line parallel to the sides or ends of the floor.

11. **Curbs.** Surface timber for curbs and scupper blocks on four sides (S4S) with a 1 inch wide chamfer at the inside upper corner of curbs. Place them as shown on the plans and bolt in place. Make half-and-half joints in curb timbers and lap at least 12 inches. Where using scupper blocks, place curb joints immediately above a scupper block.

12. **Railings.** Frame timber railings, including posts and braces, to straight lines. Use straight material, free of blemishes and surface on four sides (S4S).

13. **Miscellaneous Hardware.** Countersink the heads of screws or bolts to prevent interference with assembling work. Treat recesses formed for countersinking with preservative in accordance with subsection 709.03.C.5.

    Proportion plate and cast washers to develop the full strength of the bolt. Provide washers and heads of domehead bolts with a diameter at least 3.5 times the diameter of the bolt. Provide square washers with at least one side at least 3.5 times the diameter of the bolt. Use washers on bolts with a diameter of at least ½ inch, or use special bolt heads and nuts that provide equivalent bearing surface and strength.

14. **Prefabricated Dowel Laminated Timber Panels.** Drill dowel holes after cutting timber members to length, but before treatment. Fabricate the panels and fully assemble them at the fabrication plant. Match-mark the panels before shipment.

709.04. Measurement and Payment.

Pay Item	**Pay Unit**
Structure, Timber (Structure Identification)	Lump Sum
Timber and Lumber, Treated, Furn and Place	Thousand Board Feet

Hardware, Misc. (Structure Identification) ..... Lump Sum

If the contract contains the pay item **Structure, Timber**, the Department will not pay for miscellaneous hardware separately but will consider this to be included in the unit price for **Structure, Timber**. The cost of timber piling and excavation, necessary for construction of timber structures, is included in the unit price for **Structure, Timber**.

If the contract does not contain the item **Structure, Timber**, the Engineer will measure, and the Department will pay for timber piling in accordance with subsection 705.04. The cost of excavation for construction of timber structures is included in the unit price for **Timber and Lumber, Treated, Furn and Place**.

The Engineer will base measurement for **Timber and Lumber, Treated Furn and Place** on the nominal widths and thicknesses and the actual lengths of the material in the completed work.

Section 710. WATERPROOFING AND PROTECTIVE COVERS

710.01. Description. This work consists of providing and placing membrane waterproofing and protective covers.

710.02. Materials. Provide materials in accordance with the following:

Water..... 911
Joint and Waterproofing Materials 914
Mortar and Grout..... 1005

Select premixed shotcrete containing latex modified Portland cement and fine aggregates, as recommended by the manufacturer for use as a pneumatically applied concrete. Secure the Engineer's approval before use on the project. Do not use slag aggregate.

710.03. Construction.

A. **Joint Waterproofing.** Use preformed waterproofing for the full length of joint locations shown on the plans or as directed by the Engineer.

Provide preformed joint waterproofing at least 18 inches wide.

Apply the preformed waterproofing membrane system in accordance with the manufacturer's recommendations. Do no install membrane system sooner than 4 hours after removing the forms.

Prepare and prime the concrete surface for at least 12 inches on each side of the joint in accordance with the manufacturer's recommendations. Complete preparatory work if the air and concrete temperatures are above 40 °F and the surfaces are dry. Clean the surface designated for coverage using a solvent and scraping to remove deleterious materials. Deleterious materials include, but are not limited to, oil, grease, old waterproofing material, and asphalt residue.

Remove protrusions that could puncture the membrane, or cause a void with a diameter greater than ¾ inch before applying the primer. Remove dust from the concrete surface with compressed, oil-free air. Fill surface imperfections, potholes and spalls with a Department-approved epoxy mortar, mortar, or concrete. Cure cement-based patching mixtures at least 24 hours before installing the membrane.

Apply the primer with a roller or brush, in accordance with the manufacturer's recommendations, over the concrete surface required for membrane coverage. Provide an additional application of primer if the membrane is not placed within the time specified by the membrane system manufacturer.

Apply the membrane in accordance with the manufacturer's recommendations. Remove the release paper from the back surface of the membrane immediately before placing. Center the

membrane over the concrete joint, straight and wrinkle-free. Immediately after applying each sheet, hand roll with a roller, using pressure necessary to remove air voids and ensure complete adhesion. Overlap seams at least 6 inches.

Demonstrate to the Engineer that the entire membrane has fully adhered to the underlying concrete surface before backfilling. Waterproofing membrane systems that exhibit a loss of adhesion to the concrete surface are not acceptable. Repair punctures, tears, wrinkles, or other imperfections in the installed membrane. Make repairs by applying a patch of membrane over the damaged material, or remove and replace the membrane. Size patches to extend 6 inches beyond the perimeter of the repair area.

B. **Expansion Joint Waterproofing.** Apply a two-layer, preformed joint waterproofing membrane system for the full length of joint locations shown on the plans or as directed by the Engineer. Apply expansion joint waterproofing in accordance with subsection 710.03.A, except as modified by this subsection 710.03.B

Provide a preformed waterproofing membrane that is at least 18 inches wide.

Do not apply primer to the two beveled surfaces next to the expansion joint at the interface of the abutment wall and backwall..

Apply a bond breaker tape, or equivalent material, to the face of each beveled surface next to the expansion joint at the interface of the abutment wall and backwall, to prevent the membrane fold from adhering to these concrete surfaces.

Center the membrane over the concrete joint, making it straight and wrinkle-free, and insert it full-depth into the beveled cavity of the expansion joint to provide slack in the membrane for bridge movement.

Apply a second layer of membrane over the first layer. Do not apply bond breaker tape on top of the first layer. Coat the entire exposed surface of the first layer of membrane, including the fold, with primer before applying the second layer of membrane. Center the second layer of membrane over the concrete joint, making it straight and wrinkle-free. The second layer must conform to, and fully adhere to the first layer of membrane.

C. **Deck Waterproofing – Preformed.**

1. **Construction Procedure.** Clean the surface using a solvent, and by scraping to remove deleterious material, including oil or grease. Remove sharp protrusions by grinding. Remove old membrane material or asphalt residue using methods approved by the Engineer. Fill potholes and spalls with a diameter greater than ¾ inch with a Department-approved epoxy mortar, cement mortar, or concrete and cure as required. Correct elevation differences in the tops of box beams, such as those resulting from camber variation, by wedging with cement mortar or concrete. Sweep and clean surfaces with brooms and compressed air, as required.

Allow concrete, including grout and repair areas, to cure according to manufacturer's recommendation but no less than 7 days before applying the primer. Prime and place the membrane when the air and concrete temperatures are above 40 °F and the surfaces are dry.

Apply the primer after cleaning the deck. Use a roller, brush, squeegee, or mechanical means, to apply primer to the surface of the deck and 2 inches to 3 inches up the vertical face of the curb. Prime only those surfaces that can be covered by membrane the same day. Allow the primer to dry to a non-tacky condition before applying the membrane. Drying time may vary from ½ hour to 1½ hours, depending on the air temperature. Small bubbles on the primer are normal and do not affect the bond.

Apply a Department-approved liquid fillet material to all inside corners after the primer has cured or dried. Apply a Department-approved mastic to locations where membrane edges will fall, including the curb face, raised expansion dams, and drain castings. Apply an 8-inch wide strip of the sheet membrane to the vertical surface of the curb so it comes to a height equal to the planned depth of hot mix asphalt (HMA). Place an 8-inch wide strip of sheet membrane, centered over transverse joints or cracks wider than $^{3}/_{16}$ inch. Do not place the strip at raised steel expansion dams. Firmly press the membrane into the primer and mastic.

Start at the low, or down-slope side of the deck. Place the membrane either by hand or with equipment designed for this purpose. Shingle-lap successive strips of membrane. Place the membrane straight and wrinkle free, with no bubbles or air spaces under it.

Overlap the edges and ends of the membrane in accordance with the manufacturer's recommendations. Overlaps must be a minimum of 6 inches. At the deck drains, cut the membrane and turn it down into the downspouts or bleeder pipes. Apply a continuous bead of Department-approved mastic along the base of raised expansion dams, butt the sheet membrane up to the dam and press into the mastic.

Hand roll each sheet of membrane, immediately after installation, with a roller that weighs enough to ensure total contact with the deck. Patch torn or cut areas, or narrow overlaps, by placing sections of the membrane over the areas so the patch extends at least 6 inches beyond the defect in all directions. Roll the patch or press firmly in place and apply a Department-approved mastic to the edges.

Remove the separation sheet of plastic or paper as specified by the manufacturer, during the installation of the membrane and before the application of the HMA. Remove stones or other foreign matter found under the membrane after application and patch the area as described in this subsection 710.03.C.1.

Do not allow vehicles, except HMA hauling units and the approved rubber-tired paver on the completed waterproofing membrane.

2. **Placing HMA Over Waterproofing Membrane.** Place the HMA mixture at a temperature from 250 °F to 350 °F according to section 501 after placing the membrane. Pave only on a clean and dry membrane surface. Use rubber-tired equipment. Inspect equipment and remove burrs on tires, stones, or sharp projections that could damage the membrane. If the rubber-tired machine skids during warm weather, broadcast fine sand or cement in the tire paths. Avoid excessive use of cement or sand that would prevent adhesion of the HMA.

   Preheat paver screeds, but turn burners off during paving to avoid damaging the membrane. Deliver the HMA directly from the hauling unit to the paver. Do not stop the paver with a full hopper. Prevent build-up of material in the auger. Keep the level of the HMA in the auger just below the level of the auger shaft. Do not damage the membrane when restarting paving operations. Avoid sudden stops or sharp turns with the compaction rollers.

   Apply a fillet or cove seal using the asphalt-mineral, fiber-solvent caulking material, supplied with the membrane after rolling the surface. Apply the seal at the curb line to form a ¾ inch by ¾ inch triangular seal along the edge of the new surface, the full length of the curb.

D. **Shotcrete.** Pneumatically eject the shotcrete mixture from a mixer or gun through a hose and discharge nozzle, under regulated pressure. Add the liquid latex component at the mixer or gun, or at the nozzle, depending on equipment type and material manufacturer's recommendations.

1. **Test Panels.** Demonstrate to the Engineer, the ability of nozzle operators to correctly apply shotcrete. Use test panels, simulating job conditions, for each gun shooting position (down, horizontal, and overhead) required on the project. Use the same shotcrete material on the test panels as proposed for use on the project. Use a panel 2 feet by 2 feet square and at least 3 inch thick, or the same thickness required on the project, whichever is greater. At least half the panel area must have the same reinforcing steel pattern required on the project.

   Keep test panels continuously moist and above 40 °F for 5 days after shotcrete application. Remove at least 5 cores from the test panels and test for compressive strength in accordance with ASTM C39/C39M. Cut cores with a diameter of at least 3 inches meeting a length-to-diameter ratio (L/D) of at least 1.0. Adjust core strengths in accordance with ASTM C42/C42M if the L/D is less than 2.0. The average compressive strength of the cores must be at least 85 percent of the required compressive strength with no individual core having a compressive strength below 75 percent of the required compressive strength.

   Take additional cores through the reinforcing steel so the Engineer can evaluate the soundness of the shotcrete behind the steel. The Engineer will examine the cored surfaces and require additional cores or saw cuts if necessary to evaluate soundness and uniformity of deposited material. The Engineer will evaluate the test panels and cores to verify shotcrete surfaces are dense and free from laminations, voids, and sand pockets.

2. **Surface Preparation.** If applying shotcrete to protect waterproofing, perform the work immediately after the completion of waterproofing.

If using shotcrete to repair concrete members, remove unsound concrete and concrete contaminated by chemicals or oils. Saw cut and repair the edges of the area required for repair, and patch to a depth of at least ½ inch. Provide tools that will not damage sound concrete surrounding and beneath the area being removed.

Use galvanized or epoxy-coated welded wire reinforcement on repairs greater than 2 inches deep. Place the reinforcement at mid-depth of the repair, and at least 1 inch below the surface. Attach the reinforcement to sound concrete with stainless steel anchoring devices spaced in a grid no greater than 18 inches by 18 inches. Use anchors that can support three times the weight of shotcrete allocated to each anchor.

Blast-clean the prepared area and remove traces of dirt, oil, and loose material. Follow with an oil-free air blast to remove abrasive material and dust.

3. **Shotcrete Placement.** Pre-wet the surface with the liquid latex component immediately before placement of shotcrete.

   Balance air and material to ensure a steady flow and to prevent "slugging" of material, plugging, and excess rebound. Apply the shotcrete using pneumatic equipment that sprays the mix onto the prepared surface at a high enough velocity to produce a compacted dense homogeneous mass, with no sagging or sloughing.

   Place each layer of shotcrete in several passes over a section of the work area. Divide large expanses into smaller areas and apply shotcrete to its full thickness before moving to the next area. Avoid laminations during placement.

   Keep the nozzle 2 feet to 6 feet from the work. Hold the nozzle as near to perpendicular to the surface as possible, and never less than 45 degrees to the surface.

   Remove rebound and overspray that does not fall clear. Do not salvage or recycle rebound and overspray.

   Do not apply shotcrete under the following conditions:
   a. High wind preventing proper application;
   b. Surface temperature below 45 °F; or
   c. Rain causing washouts or sloughing of the fresh shotcrete.

4. **Curing.** Cure shotcrete and provide temperature protection in accordance with subsection 706.03.N.3.

5. **Testing.** The Engineer may require cutting cores from the completed work for compression testing. If the Engineer orders tests, obtain and test at least three cores in accordance with subsection 710.03.D.1.

710.04. Measurement and Payment.

Pay Item	Pay Unit
Joint Waterproofing	Square Foot
Shotcrete	Square Foot, Cubic Foot
Membrane, Preformed Waterproofing	Square Foot
Joint Waterproofing, Expansion	Square Foot

A. **Joint Waterproofing.** The Engineer will measure **Joint Waterproofing** by area based on a width of 18 inches and the Plan length of joints requiring treatment. The unit price for **Joint Waterproofing** includes the cost of preparing the concrete surfaces and installing the joint waterproofing system.

B. **Joint Waterproofing, Expansion.** The Engineer will measure **Joint Waterproofing, Expansion** by area based on an 18 inch width and the plan length of joints requiring treatment. The Engineer will not measure the area of folds or overlapped material for payment. The unit price for **Joint Waterproofing, Expansion** includes the cost of preparing the concrete surfaces and installing the two-layer preformed expansion joint waterproofing membrane system.

C. **Membrane, Preformed Waterproofing.** The Engineer will measure **Membrane, Performed Waterproofing** by the area covered, with no allowance for laps, patches, the 8-inch strips over transverse joints or cracks, or the 8-inch strip applied to the vertical surface of the curb. The Engineer will not deduct the areas of expansion dams or drain spouts.

The unit price for **Membrane, Performed Waterproofing** includes the cost of cleaning the deck; applying the primer, liquid fillet material, and mastic; applying, rolling, and repairing the membrane; and applying the final cove seal mastic along the curb line.

D. **Shotcrete.** The unit price for **Shotcrete** includes the cost of surface preparation; providing, mixing, and applying shotcrete material; test panels, and coring.

E. **Removing HMA Surface.** If required, the Engineer will measure, and the Department will pay for removing HMA surface separately, as **HMA Surface, Rem** in accordance with subsection 501.04.

The Engineer will measure, and the Department will pay for scarifying, hand chipping, and patching, if required, separately in accordance with subsection 712.04. If the Engineer cannot determine the amount of scarifying, hand chipping, and patching required before removal of the HMA surface, the Department will pay for this as extra work.

F. **Wedging Along Joints.** The Engineer will measure and the Department will pay for required wedging, along joints between prestressed concrete box beams, as **Patching Mortar or Conc** in accordance with subsection 712.04. The wedging must meet the approval of the Engineer.

G. The Engineer will measure, and the Department will pay for the HMA mixture separately in accordance with subsection 501.04.

Section 711. BRIDGE RAILINGS

711.01. Description. This work consists of providing and constructing bridge railings as shown in the contract.

711.02. Materials. Provide materials in accordance with the following:

Concrete Curing Material 903
Dowels and Bar Reinforcement 905
Structural Steel 906
Miscellaneous Metals 908
Tubing, Steel Railing 908
Hardware for Timber Construction 908
Structural Timber and Lumber 912
Preservative Treatments 912
Expansion Bolts 914
Barrier Reflector Markers 922
Concrete, Grade 4500, 4500HP 1004

Provide Grade 4500HP concrete for high performance railings.

Provide Grade 4500 concrete, for all other railing concrete.

Provide natural aggregate with a maximum absorption of 2.50 percent in accordance with ASTM C127. Do not use slag aggregate.

711.03. Construction.

Do not slip form concrete railings.

A. **Structural Steel, and Pipe Railings.** Shop drawings for structural steel and pipe railings are not required. Construct railing in accordance with section 707. Adjust metal railing before bolting connections to ensure abutting joints match and align throughout the railing length.

Fabricate and weld in accordance with section 707. Perform nondestructive testing of welds in accordance with subsection 707.03.D.12.

Blast clean welded post assemblies before galvanizing. Shop clean and coat hot-dipped galvanized structural steel railing in accordance with section 716 if shown in the contract.

After galvanizing, do not punch, drill, cut, or weld steel railing components. Only weld end caps and longitudinal seams made by the manufacturer. If the plans do not show or imply dimensional tolerances, apply tolerances consistent with manufacturing practices and part function, including appearance.

Roll and bend tube rail sections with a hydraulic ram. Use a mandrel inside the tube rail with the hydraulic ram if the radius is less than 3 feet. Do not miter and cut, weld, or heat curve. Do not kink tubes in the radius section. Drop weight tear testing in accordance with ASTM E436 on curved tube sections is not required.

Bend rail sections before galvanizing. Provide at least 24 inches between compound curves. Provide tubes for curved sections with a wall thickness of at least ⅜ inch. Mill splice pieces to fit. Saw or mill the ends of tube sections. Cut ends true, smooth, and free of burrs or ragged edges. Cap open ends of the rail. Erect tube railing sections with the longitudinal seam weld facing downward.

Provide a continuous railing system, splicing each joint as shown on the plans. Splice rail tube sections in the same panel.

Before casting concrete, set anchor studs for railing posts using a template in accordance with subsection 706.03.L and as shown on the plans for spacing railing posts. Tighten nuts for the anchor studs and fasteners to a snug tight condition in accordance with subsection 707.03.E.6.c.

B. **Concrete Railings.**

1. **Parapet Railings.** Cast parapet railings in accordance with section 706. Provide smooth and tight fitting forms. Rigidly hold forms to the line and grade shown on the plans and remove without damaging the concrete. Construct moldings, panel work, and bevel strips with mitered joints. Provide true, sharp, clean-cut, finished corners, free of cracks, spalls, or other defects. Provide a rubbed surface finish to exposed vertical and top surfaces in accordance with subsection 706.03.R.2.

2. **Bridge Barrier Railings.** Construct bridge barrier railings in accordance with section 706 and section 804.

3. **Bridge Barrier Railing Replacement**. Construct replacement barrier railings to the limits shown on the plans in accordance with subsection 711.03.B.2. Adhesive anchor barrier railing reinforcement into existing concrete in accordance with section 712.

C. **Timber and Lumber Railings.** Construct timber and lumber railing portions in accordance with section 709.

D. **Removal of Aluminum Railing.** Remove aluminum tube and posts on parapet railings. Leave anchor bolts in place.

E. **Bridge Railing, Thrie Beam Retrofit.** Drill holes or slots in thrie beam elements. Do not flame cut beam elements.

Core drill holes in existing concrete. Determine the location of existing reinforcement with a pachometer, or other nondestructive method, to avoid cutting existing reinforcement while coring. Avoid spalling concrete during drilling. If spalling occurs, remove loose concrete before installing bolts. Remove concrete fragments from the work area. Do not patch spalled areas.

Install nuts on bolts and studs at 5 inch slots in thrie beam expansion sections, and finger-tighten. Fully engage nuts and bolts with at least one bolt thread extending beyond nuts. Upset the first thread outside the nut with a center punch or a cold chisel, to prevent loosening. Tighten lag screws in 5 inch slots so washers fully contact beam elements, but do not impede movement due to expansion.

If thrie beam elements cover existing structure name plates, install new name plates, near the end of railings, on the fascia side. Attach name plates as shown on the plans, except make attachments with ⅜ inch diameter expansion anchored bolts.

F. **Permanent Barrier Reflective Marker.** Use barrier markers the same color as reflector marking colors required for the location. Install markers using the manufacturer's recommended adhesive and in accordance with the manufacturer's recommendations.

Remove dirt or curing compound from bridge barrier railings or concrete barriers before installing barrier markers. Install barrier markers every 50 feet, placing the first marker within 50 feet of the end of the bridge barrier railing or concrete barrier. For bridge barrier railings or concrete barriers less than 50 feet long, place a second marker within 3 feet of the opposite end. Install the markers with the top of the marker 28 inches above the roadway surface.

G. **Bridge Railing, Aesthetic**. Construct aesthetic parapet or barrier railings in accordance with 711.03.B. Adjust the width of the parapet or barrier according to the details shown on the plans to accommodate form liners to accomplish texturing on the back of the bridge barrier railings and parapet railings.

Attach the guardrail to the bridge barrier railing with longer anchor bolts, if required to accommodate the additional barrier thickness. Eliminate aesthetic texturing in guardrail anchorage area or provide a galvanized 14 inch by 26 inch by ⅜ inch plate if aesthetic textured concrete falls within guardrail anchorage limits.

711.04. Measurement and Payment.

Pay Item	**Pay Unit**
Bridge Railing, Aesthetic Parapet Tube	Foot
Bridge Railing, Aesthetic Parapet Tube, High Performance	Foot
Bridge Railing, Aesthetic Parapet Tube, Det __	Foot
Bridge Railing, Aesthetic Parapet Tube, Det __, High Performance	Foot
Bridge Railing, Thrie Beam Retrofit	Foot
Bridge Railing, __ Tube	Foot

Bridge Barrier Railing, Type __ ..... Foot
Bridge Barrier Railing, Type __, High Performance ..... Foot
Bridge Barrier Railing, Type __, Replacement ..... Foot
Bridge Barrier Railing, Type __, Replacement, High Performance ..... Foot
Bridge Barrier Railing, Aesthetic, Type __, Det __ ..... Foot
Bridge Barrier Railing, Aesthetic, Type __, Det __, High Performance ..... Foot
Bridge Barrier Railing, Aesthetic, Type __, Det __, Replacement ..... Foot
Bridge Barrier Railing, Aesthetic, Type __, Det __, Replacement,
High Performance ..... Foot
Pipe Railing, (material) ..... Foot
Reflective Marker, Permanent Barrier ..... Each

A. **General.** The Engineer will measure and the Department will pay for reinforcing steel and aesthetic texturing as specified in subsection 706.04. The Engineer will measure and the Department will pay for adhesive anchoring of steel reinforcement as specified in subsection 712.04. The Engineer will measure and the Department will pay for furnishing light standard anchor bolt assemblies as specified in subsection 819.04. The **High Performance** pay items denote railings that are high performance.

B. **Bridge Railing, Aesthetic Parapet Tube.** The Engineer will measure the **Bridge Railing, Aesthetic Parapet Tube** pay items based on plan quantities. The unit price for the **Bridge Railing, Aesthetic Parapet Tube** pay items includes the cost of the following:

1. Providing and placing concrete parapets and end walls;
2. Providing and placing tube railing;
3. Constructing joints;
4. Providing and placing anchor bolts or insert sleeves;
5. Forming, finishing, curing and protecting the concrete;
6. Placing light standard anchor bolt assemblies.

Bridge Railing, Aesthetic Parapet Tube of the detail specified includes the cost of the concrete that fills form liners and the concrete necessary to construct the railing to the shape shown on the plans.

C. **Bridge Railing, Thrie Beam Retrofit.** The Engineer will measure **Bridge Railing, Thrie Beam Retrofit**, based on plan quantities. The unit price for **Bridge Railing, Thrie Beam Retrofit** includes the cost of attaching guardrail anchorages to bridge railing end posts and providing and installing new structure name plates. The Department will pay for reflectorized washers separately.

D. **Bridge Railing Tubes.** The Engineer will measure **Bridge Railing, __ Tube**, based on plan quantities. The unit price for **Bridge Railing, __ Tube** includes the cost of the following.

1. Providing and placing tube railing;

2. Providing and placing anchor bolts or insert sleeves;
3. Placing light standard anchor bolt assemblies, and;

The Department will pay for concrete end walls and concrete brush blocks separately as specified in subsection 706.04.

E. **Bridge Barrier Railing.** The Engineer will measure the **Bridge Barrier Railing** pay items, of the type specified, based on plan quantities. The unit price for the **Bridge Barrier Railing** pay items, of the type specified, includes the cost of the following:

1. Providing and placing concrete;
2. Constructing joints;
3. Forming, finishing, curing and protecting the concrete;
4. Placing light standard anchor bolt assemblies.

The **Aesthetic** pay items include the cost of the concrete that fills form liners and concrete necessary to construct the railing to the shape shown on the plans. The **Replacement** pay items include adjustments in construction operations necessary to construct railings on existing concrete.

F. **Pipe Railing.** The Engineer will measure the length of **Bridge Railing, Pipe** based on plan quantities.

G. **Reflective Marker, Permanent Barrier.** The unit price for **Reflective Marker, Permanent Barrier** includes the cost of providing and installing the marker.

Section 712. BRIDGE REHABILITATION — CONCRETE

712.01. Description. This work consists of removing concrete and patching or resurfacing with concrete patching or overlay mixtures and removing, replacing, and retrofitting expansion joints and structural concrete portions of existing bridges.

712.02. Materials. Provide materials in accordance with the following:

Granular Material, Class II	902
Fine Aggregate 2MS	902
Polypropylene Fibers	903
Insulating Blankets	903
Latex Admixtures	903
Steel Reinforcement	905
Bar Reinforcement	905
Anchor Bolts	908
Geotextiles	910
Water	911
Epoxy Resin Adhesive	914
Epoxy Mortar	914
Mechanical Expansion Anchors	914
Concrete, Grade 3500, 3500HP, 4500, and 4500HP	1004
Mortar and Grout	1005
Structures Patching Mixtures	1006
SFMC Overlay Mixtures	1006
LMC Overlay Mixtures	1006

Do not use chloride admixtures.

Provide Grade 3500 concrete for filler walls.

Provide Type H-1 grout, selected from the Qualified Products List, for use under masonry plates.

Provide Silica Fume Modified Concrete (SFMC) or Latex Modified Concrete (LMC) for concrete bridge deck overlay.

Provide concrete containing natural aggregate with a maximum absorption of 2.50 percent in accordance with ASTM C127. Do not use slag aggregate.

Provide adhesive anchors, mechanical expansion anchors, and mechanical reinforcement splices selected from the Qualified Products List.

Select dry abrasive for blast cleaning from the Qualified Products List.

Provide embedded galvanic anodes selected from the Qualified Products List.

Provide threaded reinforcing bars with threaded couplers, approved by the manufacturer for use with the product.

Provide aluminum-filled epoxy mastic from a manufacturer from the Qualified Products List (915 Coating Systems for Steel Structures, Hanger Assemblies and End Diaphragms).

712.03. Construction.

A. **Equipment.**

1. **Equipment for Preparation of Existing Concrete.**

   a. **Sawing Equipment.** Use sawing equipment capable of sawing concrete to the depth required by the contract.

   b. **Scarifying Equipment.** Use a power operated, mechanical scarifier capable of removing the concrete surface to at least ¼ inch deep with each pass. Attach a short ski, shoe, or other device to the cutter head to limit the cut depth.

   c. **Blast Cleaning Equipment.** Use blast cleaning equipment that uses abrasive or high-pressure water to remove rust scale from reinforcing bars and small chips of loosened concrete.

   d. **Superstructure Concrete Removal Equipment.** Obtain the Engineer's written approval for the proposed sequence and method of removal before removing portions of the bridge superstructure. Use equipment for removing superstructure concrete in accordance with the following:

      i. **Removing Superstructure Concrete on Steel Beams.** Machine-mounted hydraulic or pneumatic equipment may be used in areas on the bridge decks between steel beams/girders. For removal of superstructure concrete over steel beams, limit the impact energy of machine mounted hydraulic or pneumatic hammers to a maximum rating of 2000 foot- pounds.

      ii. **Removing Superstructure Concrete on Prestressed Concrete I Beams, Spread Box Beams, Bulb Tee Beams, or 1800 Beams.** Machine-mounted hydraulic or pneumatic equipment may be used in areas of the bridge deck between the beams and to remove sidewalks, curbs, barriers, railings. Use manual pneumatic hammers to remove the bridge deck over prestressed concrete beams and diaphragms, and to remove concrete diaphragms. Limit manual pneumatic hammers to 60-pound maximum.

iii. **Removing Superstructure Concrete on Prestressed Concrete Side-By-Side Box Beams.** Do not use machine-mounted hydraulic or pneumatic equipment on full or partial deck removals, or to remove sidewalks, curbs, barriers, and railings that rest directly on the prestressed concrete beams. Machine-mounted hydraulic or pneumatic equipment may be used to remove sidewalks, curbs, barriers, and railings that do not rest directly on prestressed concrete beams. Use hydrodemolition or manual pneumatic hammers to remove concrete decks, sidewalks, curbs, barriers, and railings that rest directly on prestressed concrete beams. Limit manual pneumatic hammers to 60-pound maximum.

iv. **Removing Superstructure Concrete at Expansion and Construction Joints on Concrete Beam Bridges.** Do not use machine-mounted hydraulic or pneumatic equipment for removing superstructure concrete around expansion or construction joints on concrete beam bridges. Manual pneumatic hammers, limited to 60-pound maximum may be used.

v. **Removing Superstructure Concrete at Expansion and Construction Joints on Steel Beam Bridges.** Machine-mounted hydraulic or pneumatic equipment may be used on steel beam bridges. Limit the impact energy of machine mounted hydraulic or pneumatic hammers to a maximum rating of 300 foot-pounds or an Association of Equipment Manufacturers (AEM) AEM/CIMA Tool Energy Rating of 130 foot-pounds. Use a conical or a moil point. Do not use machine-mounted hydraulic or pneumatic hammers for removing joints within 12 inches of beam edges or within 6 inches of transverse saw cut lines.

Use machine-mounted hydraulic or pneumatic hammers before constructing bridge deck overlays. Manual pneumatic hammers, limited to 60- pound maximum, may be used.

2. **Hydrodemolition Equipment.**

a. **Equipment Description.** Use equipment that operates at a noise level less than 90 dbA, as measured from a distance of 50 feet. Use potable water in hydrodemolition operations. Use equipment shielding to prevent injury or damage from flying debris, in accordance with subsection 104.07.B.

b. **Equipment Demonstration.** The Engineer will designate two trial areas on the bridge deck for the Contractor to demonstrate that equipment, personnel, and methods of operation produce results satisfactory to the Engineer.

Complete required scarification before the demonstration.

The first trial area consists of 30 square feet of sound concrete, as determined by the Engineer. For shallow overlays, calibrate equipment to remove sound concrete to the

depth shown on the plans. For deep overlays, calibrate equipment to remove sound concrete to the depth of the top surface of the top reinforcing bars. Top surface of reinforcing bars must be exposed over 75 percent of the trial area.

Move the equipment to a second trial area that consists of deteriorated or defective concrete, and determine if the calibration for sound concrete will completely remove the unsound concrete.

If the equipment does not completely remove the unsound concrete, obtain another piece of equipment and perform another demonstration. The project completion date will not be adjusted due to delays in obtaining equipment.

Begin production removal only if the Engineer determines results are satisfactory. If the Engineer determines equipment does not adequately remove concrete, the Engineer may require equipment recalibration during production work.

3. **Concrete Overlay Surface Construction Equipment.** Provide hand tools for placing freshly mixed concrete. Use a finishing machine with a self-propelled screed, at least one powered roller, augers, and vibratory pan set at a vibration rate recommended by the manufacturer. Use a finishing machine capable of moving forward and backward under positive control.

   Raise screeds to clear the screeded surface if traveling in reverse. Obtain the Engineer's approval for modifications to the finishing equipment.

   Operate the screed on longitudinal screed rails, capable of carrying imposed loads between supports with a deflection no greater than $\frac{1}{16}$ inch. Use rail sections, straight within $\frac{1}{8}$ inch over 10 feet. Place the rail sections within $\frac{1}{16}$ inch of the required screed grade. Attach rails to the surface to allow vertical adjustments and removal without damage to the new surface.

   Use vibratory equipment to consolidate hand-finished areas and along construction joints and bulkheads. For areas with epoxy coated, or other coated reinforcement, use a vibrator with a rubber coated head.

   Alternative types of vibrating or oscillating screeds may be used if approved by the Engineer.

4. **Joint Cleaning Equipment.**

   a. **Air Compressors.** Use compressors with oil-free and moisture-free air, and a nozzle pressure of at least 90 psi.

   b. **Abrasive Blasting Equipment.** Use abrasive blasting equipment capable of cleaning as required, with a nozzle pressure of at least 90 psi. Use nozzles sized for the width of joint and replace them if enlarged by wear.

5. **Adhesive Injection Equipment.** Inject adhesive with positive displacement equipment, with fixed ratio and automatic mixing of two components at the nozzle. Use equipment with drain-back plugs and a nozzle arrangement capable of adhesive injection, at a pressure no greater than 120 psi, without defacing concrete.

6. **Blast Cleaning Equipment.** Use blast cleaning equipment with dry abrasive or high-pressure water to remove laitance, deleterious material, including old curing material and pavement marking paint.

B. **False Decking.** Construct false decking in accordance with subsection 706.03.B.

C. **Superstructure Concrete Removal.** Mark out beam and diaphragm locations before beginning removal operations. If removing decks, sidewalks, curbs, barriers, and railings, do not damage the concrete and steel portions of the superstructure to be retained. Repair damage to retained portions to the Engineer's satisfaction at no additional cost to the Department. If damage occurs, submit a corrective action plan to the Engineer for review and approval prior to beginning repairs. Repairs for damage affecting structural elements must be designed by a professional engineer licensed in the state of Michigan.

If incorporating part of the deck into new construction, make a 1-inch deep saw cut on the top and bottom of the deck at the limits of removal shown on the plans.

If sawing to section the deck for removal, cut no greater than 90 percent of the full depth of the deck over beams to avoid cutting the top flange.

Saw cut vertical steel reinforcement in the front and back of sidewalks, curbs, barriers, and railings before removal.

On prestressed concrete spread box beams, bulb tee beams, and 1800 beams, saw cut the deck between the beams full depth, parallel to the beams, and remove in sections.

D. **Removal or Revisions to Bridge Deck Joints and Joint Glands.** Remove or extend and modify existing bridge deck joints as shown in the contract. Clean structural steel exposed during concrete removal in accordance with SSPC-SP 3, Power Tool Cleaning. Apply 2 coats, 5 mils dry film thickness each, for a total of 10 mils with an aluminum-filled epoxy mastic.

Field measure the existing bridge deck joint and the existing bridge before ordering materials.

For revisions to existing expansion joint devices, field weld the new joint device to the existing joint device in accordance with section 707.03.E.7. Clean the exposed steel expansion joint device to remain in accordance with SSPC-SP 2, *Hand Tool Cleaning*. Repair damaged coating in accordance with subsection 716.03.E. Protect the work and environment in accordance with section 715. Install the gland in accordance with the manufacturer's recommendations.

Provide a continuous neoprene gland to replace the existing gland. Determine the correct seal manufacturer from field inspection. Fabricate the gland to conform to the contour of the bridge deck, all upturns, and the field measured dimensions of the joints. At an intersection of strip seal joints, fabricate the intersection joint such that both the longitudinal and transverse joints are continuous. Use lubricant and adhesive to install and seal the joint as recommended by the manufacturer.

Remove and reinstall portions of existing guardrail to access joints for removal.

E. **Scarifying Bridge Decks.**

1. **Scarifying.** Close the structure to traffic. Scarify the concrete surface requiring an overlay to at least ¼ inch deep. Do not scarify deeper than 1 inch above the top of the top reinforcing bar. If the use of a scarifier is not practical, remove concrete using hand methods. Do not damage steel reinforcement.

   Locate the steel reinforcement with a pachometer, or other Department approved method, before scarifying in locations as approved by the Engineer.

   Do not scarify within 6 feet of new deck overlay until the overlay cures at least 48 hours.

   Only allow construction vehicles required to conduct the work onto scarified surfaces.

2. **Determination of Unsound Concrete.** After structure scarifying and cleaning, the Engineer will mark areas of unsound concrete.

F. **Hand Chipping.** Use hand methods to remove concrete next to exposed reinforcing steel, concrete from spalled areas, unsound concrete from Engineer-marked areas, epoxy patches, hot mix asphalt (HMA) patches, and other unsound material, as determined by the Engineer.

Do not hand chip within 6 feet of new overlay until it cures at least 48 hours.

Blast clean to remove scale or accumulated rust from steel reinforcement.

1. **Hand Chipping Bridge Deck Concrete.** For areas requiring patching or leveling, remove concrete (sound and unsound) and other detrimental material, as determined by the Engineer, using manual pneumatic hammers, scarifying machines, or milling. Blast clean the area. If directed by the Engineer, saw cut the area requiring patching or filling on decks not requiring overlay, to the required line and depth. If deep hand chipping is required, remove concrete to at least ¾ inch below exposed steel reinforcement.

   If areas requiring patching lie next to a joint, install edge forms to the grade shown on the plans. If full depth removal of deck portions is required, install false decking in accordance with subsection 706.03.B.

Remove loose material from area requiring patching and clean with oil-free compressed air. Flush the area with clean water under pressure and remove excess water by air blasting immediately before applying patching mixture.

Clean structural steel exposed during concrete removal in accordance with SSPC-SP 3, Power Tool Cleaning. Coat exposed structural steel with 2 coats, 5 mils dry film thickness each, for a total of 10 mils with an aluminum-filled epoxy mastic before recasting concrete. Protect the work and environment in accordance with section 715.

2. **Hand Chipping Concrete Other Than Deck Concrete.** Remove unsound or loose concrete with air hammers, or other Department-approved methods. Saw cut areas requiring patching or filling to an edge depth of at least 1 inch, along a line determined by the Engineer. Remove concrete to at least 3 inches measured from the concrete surface. Remove concrete from exposed steel reinforcement to provide clearance of at least ¾ inch around the steel reinforcement.

   Blast clean, and blow out the area with oil-free compressed air.

   If areas requiring patching lie next to joints, install edge forms to the line shown on the plans. Remove loose material from areas requiring patching and cleaning with oil-free compressed air. Flush the area with clean water under pressure and remove excess water by air blasting immediately before applying patching mixture. Place patches in accordance with subsection 712.03.O.

G. **Hydrodemolition.** Remove deck concrete and concrete patches with high-pressure water jets. If hydrodemolition is not practical, use hand methods to remove areas.

Remove HMA patches in accordance with subsection 501.03. Remove patches by hydrodemolition, 60-pound pneumatic hammers, or other equipment approved by the Engineer. Clean debris from the deck, before beginning the first pass of concrete hydrodemolition. If using hydrodemolition equipment to remove HMA patches, complete work before the first pass for concrete removal.

Use hydrodemolition to the limits shown on the plans or as determined by the Engineer.

If the plans show limits of hydrodemolition, make one pass of the hydrodemolisher to remove sound concrete to the depth and limits required. Avoid removing sound concrete beyond the required depth. Remove deteriorated or defective concrete within the limits required.

The Engineer will determine and mark areas of unsound concrete remaining after the first pass, as specified in subsection 712.03.E.2. Remove unsound areas with a second pass of the hydrodemolisher, 60-pound pneumatic hammers, or other equipment approved by the Engineer.

Make the second pass with the hydrodemolition equipment calibrated the same as for the first pass.

Remove concrete debris by hand or mechanical methods immediately after hydrodemolition. Remove debris that settles on, or adheres to, the surface of sound concrete, at no additional cost to the Department.

Avoid damage to remaining sound concrete or exposed steel reinforcement. Heavy equipment, including concrete trucks and vacuum trucks for removing concrete debris, are not allowed on hydrodemolished surfaces of the deck. Following debris removal and before placing overlay, blast clean the surface with abrasive or water to remove bond-breaking residue or loose material from concrete surfaces and rust from steel reinforcement.

Clean structural steel exposed during concrete removal in accordance with SSPC-SP 3, Power Tool Cleaning, and apply 2 coats, 5 mils dry film thickness each, for a total of 10 mils with an aluminum-filled epoxy mastic. Protect the work and environment in accordance with section 715.

Sample, test, monitor, manage, neutralize, and discharge hydrodemolition runoff water from bridge decks. Collect, filter, and dispose of runoff water generated by hydrodemolition. Obtain the required permits and comply with regulations concerning runoff water disposal. Do not allow runoff water to create a hazard to the adjacent, or underlying traveled roadway surfaces. Protect existing berm slopes from scouring by water jet or runoff water. Do not allow runoff water, filtered or unfiltered, to enter storm sewers, bridge drain downspouts, or bridge approach downspouts. Do not discharge runoff water, filtered or unfiltered, into surface water, floodplains, or wetlands.

In areas with enclosed drainage systems or areas where the contract does not allow runoff discharge, collect, haul, and dispose of runoff water as a liquid industrial waste in accordance with section 107.

H. **End Header Replacement.** Remove the end header of bridge decks and rebuild decks and adjacent approaches in the removal area, as shown in the contract.

I. **Exposed Steel Reinforcement.** Blast clean to remove scale or accumulated rust from steel reinforcement. Supplement broken or missing reinforcement and bars that have lost ¼ or more of the original bar diameter by splicing in new bars with a lap length of 35 bar diameters, or as directed by the Engineer. If the bond between existing concrete and reinforcing steel is destroyed, remove concrete next to the bar to at least ¾ inch deep, except on bridge decks with lower bar mat clearances that make this impractical. Do not displace or damage exposed steel reinforcement. Remove exposed waterstops. Adjust steel reinforcement to provide cover as shown on the plans.

Wire tie exposed, untied steel reinforcement bar laps and intersections as follows.

1. **Bar Laps.** Tie bar laps within 3 inches of each end of the lap. If sound concrete bonded to steel reinforcement prohibits tying bar laps, remove concrete to tie the bars as required.

2. **Bar Intersections.** Tie bar intersections at every third intersection. If sound concrete bonded to steel reinforcement prohibits tying a bar intersection, or tying the third intersection, tie the next nearest intersection. Do not remove sound concrete bonded to steel reinforcement to tie the required bar intersections.

J. **Anchoring Reinforcing Bars or Bolts with Adhesive.** Drill holes, remove unsound concrete and dust, fill drilled holes with adhesive, and install reinforcing bars or bolts in accordance with the manufacturer's recommendations except as modified by the contract. Place adhesive when the concrete and the steel temperature is at least 50 °F and rising. Indirect artificial heat may be used to warm the concrete and bars or bolts. The temperature of the concrete and bars or bolts must be maintained until the adhesive is fully cured.

Maintain concrete and steel surfaces, that the adhesive will contact, free of contamination.

1. **Anchoring Bars or Bolts.** Propose complete details of drilling, cleaning, and bonding systems for anchoring reinforcement or bolts and submit for the Engineer's approval before use. The minimum embedment depth must be nine times the anchor diameter for threaded rods or bolts and twelve times the anchor diameter for reinforcing bars. Propose a drilling method that does not cut or damage existing steel reinforcement. Prepare at least three proof tests per anchor diameter and type in the same orientation in which they will be installed on the existing structure, on a separate concrete block representative of the existing structure concrete. Install proof test anchors in the presence of the Engineer. The Engineer will conduct the proof testing of the proposed systems. The Engineer will base approval of the anchoring system on the following criteria:

   a. Proof tests show that 125 percent of the bar yield strength can be developed;
   b. Bars bond to the concrete at least 90 percent of the embedded bar length and circumferential area; and
   c. Average bar slippage at yield strength does not exceed $1/16$ inch.

   Locate the steel reinforcement with a pachometer, or other Department-approved method, before drilling holes. Remove loose concrete, dust, dirt, and oil from holes by flushing with water under pressure and mechanical agitation. Blow out the holes with oil-free compressed air and dry before applying adhesive.

   Clean steel reinforcement of loose scale, rust, oil, and dirt and dry before installation. Prepare adhesive for installation in the hole in accordance with the manufacturer's directions. Place adhesive in the hole to completely fill the space between bar and hole surface for the entire hole depth.

2. **Field Testing.** Conduct field testing during the first production day at three locations selected by the Engineer. Provide adequate notice to allow the Engineer to witness this field testing. Use a tension testing device for unconfined testing in accordance with ASTM E488/E488M. Provide a copy of a certified calibration for the tension testing device. Update the calibration annually. The Engineer may conduct random pull-out tests for acceptance. In order to be considered passing tests, field tests performed by the Contractor and random tests performed by the Engineer must show that 90 percent of the bar yield strength develops with less than 1⁄16 inch slip.

   Repair damage to epoxy coating.

K. **Mechanical Expansion Anchored Bolts.** Propose a drilling method that does not damage or cut existing steel reinforcement. Locate steel reinforcement by a pachometer or other Department-approved method before drilling the holes. Drill holes of the size and depth recommended by the bolt manufacturer except as modified by the contract. Remove unsound concrete. Clean the hole with oil-free compressed air, brush, and clean out with air again. Do not elongate holes. The Engineer will conduct proof testing of the proposed anchors.

1. **Anchoring Bolts.** Provide a copy of the manufacturer's product data sheet and installation procedure for the anchors, showing the ultimate load of the anchor at the required embedment depth. Prepare the proof test anchors on a separate concrete block representative of the existing structure concrete. The anchors must develop the proof loads specified in Table 712-1.

Table 712-1
Anchor Bolt Proof Tensile Loading

Diameter (in)	Load (lb)
3⁄8	3,500
1⁄2	6,400
5⁄8	10,200
3⁄4	15,000
7⁄8	20,800

2. **Field Testing.** Conduct field testing during the first production day at three locations selected by the Engineer. Provide adequate notice to allow the Engineer to witness this field testing. Use a tension testing device in accordance with ASTM E488/E488M. Provide a copy of a certified calibration for the tension testing device. Update the calibration annually. In order to be considered passing tests, field tests must show the anchor provides a pull-out resistance of at least 50 percent of the proof tensile load at 1⁄16 inch slippage. The Engineer may conduct random pullout tests at 50 percent of the proof tensile load for acceptance.

L. **Mechanical Reinforcement Splicing.**

1. **Preparation of Bar Ends**. Saw or shear bars requiring splicing. Straighten the ends of sheared bars. Remove burrs, paint, oil, rust, scale, or other deleterious material from

surfaces. Use wire brushes, abrasive blasting, or other Department-approved methods to clean 2 inches beyond sleeve locations immediately before splicing. Obtain the Engineer's approval for bar end surface preparations before installation.

2. **Installation.** Install mechanical reinforcement splices in accordance with the manufacturer's procedure. Submit the installation procedure, including manufacturer approvals, to the Engineer for review before beginning splicing.

   If using epoxy-coated steel reinforcement, epoxy coat mechanical reinforcement splices in accordance with ASTM A775/A775M. If the installation procedure does not damage a pre-applied epoxy coating, provide epoxy-coated splices. After installation, epoxy coat exposed surfaces of mechanical reinforcement splices and attached reinforcing steel, including damaged coatings and exposed threads, in accordance with subsection 706.03.E.8.

   Protect the threads of threaded couplers with internal plastic coupler protectors, or other manufacturer-approved methods. Protect the threads on the reinforcing bars with plastic bar end protectors, or other Department-approved methods. Adjust flanged or asymmetrical couplers to minimize infringement on the required clear cover.

3. **Testing.** Provide adequate notice to allow the Engineer to witness the test splicing. Use tests to establish a splicing procedure. Provide two test splices on the largest bar size. Demonstrate to the Engineer that splices have a tensile strength of 125 percent of the bar yield strength and high strength splices have a tensile strength of 150 percent of the bar yield strength. Provide sample bars 12 inches long for the required tests. If the exterior of existing reinforcing steel for splicing is corroded or deformed, the Engineer may require additional qualification testing on the bars. The Department will test all test splices.

M. **Forming.** Provide forms to enable placement of concrete mixture. If approved by the Engineer, suspend forms from existing reinforcing bars using wire ties. In large removal areas, support forms by blocking from the beam flanges. Install forms for vertical patches in no greater than 4-foot-high sections, with the form tops no more than 4 feet above the concrete level as the pour progresses. Remove forms upon completion of the work.

N. **Protection and Cleaning of Deck Areas to be Overlaid.** Maintain areas of removed unsound concrete and patches free of slurry produced by wet sawing or wet scarifying. Drain slurry away from completed areas. Remove slurry from prepared areas before resurfacing.

Before placing overlay, blast clean the deck and the edges of previously placed overlays to expose coarse aggregate and obtain a sound surface for bonding the overlay to the deck. Blast clean with abrasive or water under high pressure.

Minimize and control dust from abrasive blasting operations. Methods for dust control may include the use of water-blasting or vacuum equipment.

Complete the final deck preparation and allow the Engineer time to inspect the deck condition before placing overlay. Obtain written approval from the Engineer for placing concrete overlay.

Do not allow traffic on the prepared deck before overlay placement.

Clean and wet the deck surface 1 hour before placing overlay mixture and keep surface damp throughout the pour. Remove standing water from depressions, holes, or concrete removal areas with oil-free compressed air.

O. **Mixing, Placing, Finishing, and Curing Concrete Patches.** Machine mix patching mixture with equipment specified in subsection 1006.03. Provide mixture in quantities to allow placing and finishing before initial set.

Prepare and test work progress specimens, as necessary, in accordance with section 1002.

Moisten surface without leaving free water, and prime the existing concrete. Place patching mixture.

On bridge decks with latex modified concrete mixes, use a stiff bristle brush to apply the initial layer of mixture onto the wetted, prepared surface. Apply an even coating to vertical and horizontal surfaces. Limit the rate of progress so brushed material does not dry before covering with overlay material. Do not use material for brushing if no mortar remains in the mix.

For bridge decks, place the patching mixture into the area, vibrate uniformly, and finish with a wood float. After finishing, texture the patched surface to uniformly roughen the surface.

For patches on surfaces other than decks, place concrete and consolidate. The Engineer may direct the use of small hand vibrators or the vibration of the forms.

Immediately after final finishing of each patch, apply a layer of wet burlap soaked in water for at least 12 hours to exposed concrete surfaces. Place a 4-mil-thick layer of polyethylene film over the burlap to protect the top surfaces from evaporation.

Membrane curing compounds may be used for patches of non-latex modified concrete. Forms may be left in place, with burlap covering exposed areas, for curing.

Keep patches of non-latex modified concrete covered until concrete attains a flexural strength of 550 psi, but not less than 5 days for regular strength patching mixtures, or not less than 24 hours for high-early-strength patching mixtures.

Maintain patches with regular strength latex modified concrete continuously damp for the first 48 hours. Remove curing material at the end of the 48 hour wet cure period and allow concrete to air cure for an additional 48 hours. Maintain patches with high early strength latex modified concrete continuously damp for at least 24 hours.

If the air temperature falls below 50 °F, the Engineer may require additional curing time to ensure concrete attains a flexural strength of 550 psi. If completing concrete repairs in cold weather, protect concrete in accordance with subsection 712.03.R.

Do not place additional concrete on reinforced substructure concrete until reinforced substructure concrete cures for at least three days and attains at least 70 percent of the required minimum 28-day flexural or compressive strength.

Do not use mechanical attachments to support forms until concrete attains at least 70 percent of the required minimum 28 day flexural or compressive strength. The Engineer may lower the concrete strength required for attaching forms after reviewing calculations submitted by a professional engineer, licensed in the state of Michigan, showing that imposed loads will not exceed 70 percent of the concrete strength at the time the load is applied.

P. **Mixing, Placing, Finishing and Curing Latex Modified Concrete (LMC) Overlay Mixtures.** Prepare and test work progress specimens, as necessary, in accordance with section 1002. Keep equipment off patches until patches attain a flexural strength of at least 550 psi.

Place latex modified concrete overlay mixtures at night in accordance with subsection 706.03.I.

Form expansion joints and dams through the overlay. Install bulkheads to the required grade and profile before placing concrete mixture. Do not cast full depth across the joint.

Place screed rails and fasten to ensure finishing new surfaces to the required profile. Provide horizontally and vertically stable supporting rails. Do not treat screed rails with parting compound. Remove and reinstall portions of existing thrie beam guardrail required for access to screed the deck.

Texture and finish deck surfaces to the tolerances specified in subsection 706.03.M.3 and subsection 706.03.M.4.

Proportion ingredients and mix at the project in clean mixers. Provide concrete uniform in composition and consistency. Produce mix at a rate that allows finishing to continue at a steady pace with final finishing completed before the formation of the plastic surface film. Brush the initial layer of mixture onto the wetted, prepared surface and apply even coating to vertical and horizontal surfaces. Limit the rate of progress so brushed material does not dry before covering with overlay material. Do not use material for brushing if no mortar remains in the mix.

Place the mixture at least ¼ inch above the final grade. Consolidate and finish to the final grade. Hand finish with a float along the edge of the pour, or on small areas. Use a small quantity of latex grout to aid hand floating, if necessary. Finish joints with an edge tool, except next to metal expansion dams, curbs, previously placed lanes, and edges requiring sawing. Grind to remove minor irregularities.

After the mixture stiffens, separate screed rails and construction bulkheads from the new material by passing a pointing trowel along the inside face. Cut with the trowel the entire depth and length of rails. Do not separate metal expansion dams from the overlay.

Cover the finished surface with a single layer of clean, wet burlap when the surface can support it without deformation.

Place a polyethylene film, at least 4 mils thick, on the wet burlap within 1 hour of covering the concrete with burlap and wet cure the surface for 48 hours. Do not form or cast succeeding portions onto the bridge deck prior to completion of the 48-hour wet cure. Remove excess or ponding cure water prior to casting succeeding portions.

Burlap-polyethylene (Burlene) sheets may be substituted for polyethylene film if approved by the Engineer. Place the polyethylene side down against the wet burlap.

At the end of the 48-hour wet cure period, remove curing material and allow the surface to air cure for an additional 48 hours. Do not allow curing water runoff to enter surface water. Keep traffic off the surface for at least 96 hours after placement.

Q. **Mixing, Placing, Finishing, and Curing Silica Fume Modified (SFMC) Concrete Overlays.** Prepare and test work progress specimens, as necessary, in accordance with section 1002. Keep equipment off patches until patches attain a flexural strength of at least 550 psi.

Place SFMC overlay mixtures at night in accordance with subsection 706.03.I.

Form expansion joints and dams through the overlay. Install a bulkhead to the required grade and profile before placing the concrete mixture. If joint is cast prior to the overlay, do not cast full depth across the joint. If joint placement is integral with overlay placement, cast joints full depth.

Place screed rails and fasten to ensure finishing new surfaces to the required profile. Provide horizontally and vertically stable supporting rails. Do not treat screed rails with parting compound. Remove and reinstall portions of existing thrie beam guardrail required for access to screed the deck.

Mix and place a 4-cubic-yard trial batch at the batch plant, or at the project as directed by the Engineer, at least 3 days before full production. Notify the Engineer of the time and location of the trial batch at least 24 hours before batching.

Proportion trial batches in accordance with the adjusted mix design, using the same materials as in the production mixture. The Engineer will consider the trial batch successful if slump test results are within 1 inch of the required range, and the air content test results are within 1.0 percent of the required range. If trial batches do not meet the requirements, discard and repeat the batching at no additional cost to the Department.

Proportion and mix SFMC using a ready mixed or central mixed batch plant in accordance with subsection 1006.03. Discharge trucks on the project within 1 hour of charging at the plant.

Wet the prepared deck 1 hour before placing the SFMC overlay with a spray application of water. Use clean, oil free, compressed air to remove water collected in depressions. Maintain a moistened surface throughout the pour.

Hand vibrate SFMC mixture placed in localized areas deeper than 3 inches. Draw a probe vibrator horizontally through the concrete, parallel to the transverse reinforcing bars, at intervals no greater than 18 inches. Vibrate ahead of the finishing machine. Provide a locator system to assist the operator in finding deep removal areas, and coordinate with the Engineer.

Texture and finish deck surfaces to the tolerances specified in subsection 706.03.M.3 and subsection 706.03.M.4.

Apply a continuous fog spray of water to the screeded and finished concrete. Provide fogging equipment capable of spreading a fine mist over concrete surfaces without ponding water. Continue fogging behind the final floating operation until placement and activation of the wet cure system. Do not fog concrete surfaces to aid surface finishing.

Prepare clean, contaminate-free burlap by soaking in clean water for at least 12 hours before beginning concrete placement. Immediately before use, drape or suspend the burlap sheeting vertically to remove excess water. Cover concrete surfaces with wet burlap when the concrete surface can support it without deformation. Do not allow in-place burlap to dry. Do not use burlap-polyethylene (Burlene), or other products with impervious surfaces.

Install a network of soaker hoses over wet burlap when the concrete surface will support it without deformation. Use soaker hoses perforated throughout the lengths within the curing limits. Use non-perforated hose outside the curing limits. Connect to a water supply that meets the requirements of section 911. Ensure soaker hoses apply cure water uniformly and continuously cover the entire bridge deck surface without moving the hoses. Prevent excessive localized water discharge. Demonstrate to the Engineer that soaker hose systems provide uniform coverage of the entire deck surface.

Place a layer of 4-mil-thick polyethylene film over the entire deck surface and soaker hose system. Overlap seams in the polyethylene at least 10 inches. Activate the system and maintain complete and uninterrupted wet curing. Control water runoff to prevent a hazard to traffic or soil erosion. Do not allow curing water runoff to enter surface waters.

Maintain the wet cure for at least 7 days after concrete placement. Do not remove wet cure systems based on 7-day compressive strengths reached in less than 7 days. Do not form or cast succeeding portions onto the overlay prior to completion of the 7-day continuous wet cure. Remove excess or ponding cure water prior to casting of succeeding structure portions.

Do not allow heavy equipment on the deck overlay until the overlay concrete is in place at least 7 days and attains at least 70 percent of the required minimum 28-day flexural or compressive strength.

R. **Cold Weather Limitations for Placing SFMC or LMC Overlay Mixtures.** Complete overlays and other work within required temperatures. Place LMC or SFMC concrete between April 1 and November 1 unless approved by the Engineer. Maintain concrete at a temperature of at least 45 °F.

Place overlay mixtures if the air temperature and concrete substrate are at least 40 °F and rising, and the forecasted air temperature during the curing period will remain above 35 °F. Use insulating blankets if the forecasted air temperature during the curing period will fall below 45 °F. Overlap blankets at least 12 inches. Place the insulating blankets on top of the wet curing system. Leave insulating blankets in place for the duration of the wet curing period.

For LMC overlays, if the forecasted air temperature will fall below 45 °F during the remainder of the curing period, extend the curing period until the concrete attains a flexural strength of at least 550 psi. Cure for the full curing period, regardless of strength gain.

S. **Hot Weather Limitations for Placing Overlay Mixtures.** Cast concrete overlay mixtures when evaporation does not exceed 0.15 pounds per square foot per hour in accordance with Figure 706-1. Cast overlay concrete when air temperature remains below 85 °F. Supply Department-approved equipment for determining the relative humidity and wind velocity on the project.

T. **Construction Limitations for Placing Overlay Mixtures.** For delays no greater than 1 hour, protect the end of the concrete pour from drying with several layers of wet burlap.

For delays greater than 1 hour, install a construction dam or bulkhead. If restarting the overlay placement before the concrete cures, leave a 3-foot gap between bulkheads. Blast clean and cast the gap the next working day.

Protect freshly placed concrete from rain, as approved by the Engineer. Stop placement operations if rain starts. The Engineer may direct the removal of material damaged by rain.

Remove screed rails after the concrete takes initial set. Protect edges of new surfaces from damage during screed rail removal.

Cure overlays and repair areas for at least 48 hours before scarifying, hydrodemolition, or chipping within 6 feet. Outline repair areas with saw cuts extending to the depth of the overlay before removal and repair.

U. **Repairing Cracks by Pressure Injection.** Repair cracks as shown on the plans or directed by the Engineer.

1. **Preparation of Cracked Surfaces.** Remove leaching deposits from cracks by abrasive blasting or wire brushing, as directed by the Engineer. Apply a temporary seal, with entry ports for adhesive, along the clean, dry crack without defacing the concrete surface.

   The seal must contain the pumped adhesive. Space ports farther apart than the estimated crack depth and close enough to allow adhesive material to travel between ports.

2. **Flushing Cracks.** If directed by the Engineer, flush cracks with water by pressure washing through injection ports. Wash out concrete laitance or contaminants in the crack. Remove free water by blowing air through the crack after flushing.

3. **Temperature Limitations for Injection.** Perform injection when concrete and ambient air temperatures are above 50 °F. The Engineer may approve lower injection temperatures if the adhesive material manufacturer's recommendations support lower injection temperatures.

4. **Injection of Cracks.** Begin injection at the lower entry port and continue until adhesive is visible at the port directly above, or next to the pumping port. Stop injection and seal the port. Transfer the injector to the next port and continue injection until the crack fills. Inject from both sides of a cracked member to complete crack repair. Prevent leakage of the adhesive from the crack after injection completion.

5. **Adhesive Cure and Removal of Temporary Seal.** Cure adhesive at temperatures of at least 50 °F for the minimum cure time recommended by the manufacturer. Remove the seal or grind flush with the concrete surface. The Engineer may allow the temporary seal to remain in place for injected areas not visible.

   Clean areas repaired by injection of surface contamination caused by injections.

V. **Water Repellent Treatment.** Apply penetrating water repellent treatment in accordance with subsection 706.03.S.

W. **Cleaning and Coating Exposed Structural Steel.** Clean and coat areas of visible rust, rust breakthrough, and blistered, peeling, or scaling paint as identified by the Engineer. Clean structural steel exposed during concrete removal in accordance with SSPC SP3 Power Tool Cleaning, and apply 2 coats, 5 mils dry film thickness each for a total of 10 mils with an aluminum-filled epoxy mastic; or clean and coat in accordance with section 715. Protect the work and environment in accordance with section 715. The Engineer will inspect the following surfaces to decide the necessity of cleaning and coating:

1. The tops and edges of top flanges, and beam ends if removing the entire deck above steel beams;
2. The edges of top flanges if using metal deck forms; and

3. Metal surfaces exposed during removal of backwall portions or full deck removal.

Complete cleaning and coating of exposed structural steel before installing deck forms and shear developers.

X. **Grouting Under Masonry Plates.** Propose procedures for grouting under masonry plates to the Engineer for approval. Demonstrate to the Engineer by full-scale test, that the grout placement procedures result in 90 percent surface area contact based on the contact areas of the masonry plate and concrete surface.

Do not begin the grouting operation until underlying concrete achieves 70 percent of the required minimum 28-day flexural or compressive strength.

Form the space for grouting and clean the surface. Mix, place, and cure grout in accordance with the manufacturer's recommendations.

After curing, remove forming material to allow inspection of the grouted space. Do not apply load to the grout until curing is complete.

Y. **Galvanic Anodes.** Use Portland cement-based repair mortars, concrete, and bonding agents. Do not use non-conductive repair materials, including epoxy, urethane, or magnesium phosphate.

Install galvanic anodes to existing uncoated reinforcement along the perimeter of the repair, spaced as shown on the plans and in accordance with the manufacturer's recommendations. Do not space anodes more than 24 inches.

Provide ¾-inch clearance between anodes and substrate to allow repair material to encase anodes.

Secure galvanic anodes as close as possible to the patch edge using anode tie wires. Tighten tie wires to prevent free movement.

If tying anodes onto a single uncoated steel reinforcing bar, or if covering with less than 1½ inches of concrete, place anodes under the uncoated reinforcing steel. Secure anodes to uncoated reinforcing steel according to the manufacturer's recommendations

If 1½ inches of concrete covers the anode, anodes may be placed at the intersection between two uncoated bars, and secured to each bar.

Confirm electrical connection between anode tie wires and uncoated reinforcing steel with a multi-meter. Ensure a direct current (DC) resistance of no greater than 1 ohm.

Confirm electrical continuity of exposed, uncoated reinforcing steel in the repair area. Steel reinforcement is considered continuous if the DC resistance is not greater than 1 ohm. If the DC resistance is greater than 1 ohm, establish electrical continuity with uncoated steel tie wire.

Obtain verification of installation of galvanic anodes from the Engineer before concrete placement.

712.04. Measurement and Payment.

Pay Item	Pay Unit
Scarifying	Square Yard
Latex Conc Surface, Rem	Square Yard
Hand Chipping, Shallow	Square Yard
Hand Chipping, Deep	Square Yard
Hand Chipping, Full Depth	Cubic Foot
Hand Chipping, Other Than Deck	Cubic Foot
Hydrodemolition, First Pass	Square Yard
Hydrodemolition, 2nd Pass	Square Yard
Structures, Rehabilitation, Rem Portions (Structure Identification)	Lump Sum
End Header Replacement	Foot
Deck Joint, Rem	Foot
Bridge Joint, Revise Expansion Device	Each
Bridge Joint, Strip Seal Gland Replacement	Foot
Adhesive Anchoring of Vertical Bar, __ inch	Each
Adhesive Anchoring of Horizontal Bar, __ inch	Each
Bolt, Adhesive Anchored, __ inch	Each
Bolt, Mechanical Expansion Anchored, __ inch	Each
Reinforcement, Mechanical Splice	Each
Patch, Full Depth	Cubic Yard
Patching Mortar or Conc	Cubic Foot, Cubic Yard
Patching Conc, (type)	Cubic Yard
Patch, Forming	Square Foot
Flushing Cracks, Water	Foot
Structural Crack, Repr	Foot
Filler Wall Conc	Cubic Yard
Top Flanges and Beam Ends, Clean and Coat	Square Yard
Bridge Deck Surface Construction	Square Yard
Conc, Silica Fume Modified	Cubic Yard
Conc, Bridge Deck Ovly	Cubic Yard
Masonry Plate, Grout	Each
Embedded Galvanic Anode	Each

A. **Scarifying.** The Engineer will measure **Scarifying** to the limits shown on the Plans, including joints and drain castings.

B. **Latex Concrete Surface, Removal.** The unit price for **Latex Conc Surface, Rem** includes the cost of removing latex modified concrete bridge deck surfaces to a depth of 3 inches or to the top mat of steel reinforcement. The Department will pay for removing unsound latex modified concrete at or below the top mat of steel reinforcement at the unit price for relevant hydrodemolition pay items.

C. **Hand Chipping.**

1. **Hand Chipping, Shallow. Hand Chipping, Shallow** applies to removing bridge deck concrete from the surface to the midpoint of the top bar of the top mat of the steel reinforcement. The Engineer will measure **Hand Chipping, Shallow** based on areas marked by the Engineer. The unit price for **Hand Chipping, Shallow** includes the cost of all perimeter sawcuts, removal of material, blast cleaning steel reinforcement, and preparing the area for patching.

2. **Hand Chipping, Deep. Hand Chipping, Deep** applies to removing bridge deck concrete from the surface to at least ¾ inch below the bottom of exposed steel. The Engineer will measure **Hand Chipping, Deep** based on areas marked by the Engineer. The unit price for **Hand Chipping, Deep** includes the cost of all perimeter sawcuts, removal of material, blast cleaning steel reinforcement, preparing the area for patching, cleaning and coating exposed structural steel, and protecting the work and the environment during cleaning.

3. **Hand Chipping, Full Depth. Hand Chipping, Full Depth** applies to removing bridge deck concrete full depth. The Engineer will measure **Hand Chipping, Full Depth** based on areas marked by the Engineer. The unit price for **Hand Chipping, Full Depth** includes the cost of all perimeter sawcuts, removal of material, blast cleaning steel reinforcement, preparing the area for patching, cleaning and coating exposed structural steel, and protecting the work and the environment during cleaning.

4. **Hand Chipping, Other Than Deck. Hand Chipping, Other Than Deck** applies to removing concrete, but does not apply to removing deck top surfaces, regardless of depth. The Engineer will measure **Hand Chipping, Other Than Deck** based on areas marked by the Engineer. The unit price for **Hand Chipping, Other Than Deck** includes the cost of all perimeter sawcuts, removal of material, blast cleaning steel reinforcement, and preparing the area for patching.

5. **Hydrodemolition.** The Engineer will measure **Hydrodemolition, First Pass** to the limits shown on the plans, without deducting areas of expansion joint devices and drain castings.

   The unit price for **Hydrodemolition, First Pass** includes the cost of removing concrete, including concrete removed during the successful hydrodemolition equipment demonstration, tying exposed steel reinforcement, cleaning and coating exposed structural steel, and protecting the work and the environment during cleaning.

The unit price for **Hydrodemolition, 2nd Pass** includes the cost of hand chipping to remove concrete, including latex modified concrete, below steel reinforcement.

The Department will pay for removing HMA patches as **HMA Patch, Rem** in accordance with subsection 501.04.

D. **Reinforcing.**

1. **Reinforcement, Steel.** The Engineer will measure, and the Department will pay for steel reinforcement as **Reinforcement, Steel** of the type required in accordance with subsection 706.04. The Engineer will measure dual bars of equivalent section as the required size.

   The unit price for **Reinforcement, Steel** includes the cost of providing and splicing in new bars to replace corroded or removed bars. The Department will not pay for replacing reinforcement damaged by Contractor operations.

2. **Adhesive Anchoring of Vertical and Horizontal Bars.** The unit prices for **Adhesive Anchoring of Vertical Bar** and **Adhesive Anchoring of Horizontal Bar**, of the sizes required, includes the cost of providing adhesive, drilling and cleaning holes, filling holes with adhesive, installing bars, and testing.

   The unit price for **Reinforcement, Steel** of the type required includes the cost of providing reinforcing bars. The Department will pay for each bar end requiring anchoring as a separate unit.

3. **Reinforcement, Mechanical Splice.** The Engineer will measure, and the Department will pay for **Reinforcement, Mechanical Splice** by the number of units required. If increased coupler lengths compensate for inferior deformations on existing bars, the Department will increase the unit price on a pro-rated basis, based on the length of the increase in inches.

   The unit price for **Reinforcement, Mechanical Splice** includes the cost of preparing test samples, preparing steel reinforcement for splicing, installing couplers, and applying epoxy coating.

   The unit prices for **Reinforcement, Steel** of type required include the cost of threaded reinforcing bars used with threaded couplers.

E. **Bolt, Adhesive Anchored.** The unit price for **Bolt, Adhesive Anchored** includes the cost of providing bolts and adhesive, drilling and cleaning holes, filling holes with adhesive, installing bolts, and testing.

F. **Bolt, Mechanical Expansion Anchored.** The unit price for **Bolt, Mechanical Expansion Anchored** includes the cost of providing bolts, drilling and cleaning holes, installing bolts and testing

G. **Structures, Rehabilitation, Remove Portions.** The unit price for **Structures, Rehabilitation, Rem Portions** includes the cost of removing materials as shown on the Plans, saw cuts required for removal, and disposal of materials in accordance with subsection 204.03.B.

H. **End Header Replacement.** The unit price for **End Header Replacement** includes the cost of removing and replacing end headers, along with portions of decks, backwalls, and approach pavements as shown on the plans.

I. **Structural Crack, Repair.** The Engineer will measure **Structural Crack, Repr** along the length of crack injected, along one surface only. The unit price for **Structural Crack, Repr** includes the cost of preparing cracks, installing temporary seals and ports, providing and injecting the epoxy adhesive, removing temporary seals, and cleaning finished surfaces.

If the Engineer requires additional cleaning and flushing of the cracks after placing temporary seals and entry ports, the Department will pay for this work as **Flushing Cracks, Water**.

J. **Deck Joint, Removal**. The Engineer will measure **Deck Joint, Rem** to the limits shown on the plans. The unit price for **Deck Joint, Rem** includes the cost of removing expansion and construction joints, cleaning and coating exposed structural steel, removing deck joint concrete, regardless of deck thickness and diaphragm locations, removing barrier, sidewalk and brush block concrete, protecting the work and environment during cleaning, and removing and reinstalling portions of existing guardrail required to remove the joint. The Department will pay for removal required beyond the limits shown on the plans as extra work.

Bridge Joint, Revise Expansion Device will be measured as each. The unit price for **Bridge Joint, Revise Expansion Device** includes field welding, cleaning, and coating the expansion joint device. The Engineer will measure each joint end separately.

Bridge Joint, Strip Seal Gland Replacement will be measured to the limits shown on the plans. The unit price for **Bridge Joint, Strip Seal Gland Replacement** includes the cost of removing the existing gland and any associated appurtenances, cleaning the expansion joint device, protecting the work and environment during cleaning, and providing and installing the replacement glands, lubricants and adhesives, and any associated appurtenances.

K. **Patching.** The Engineer will measure **Patch, Full Depth** based on the volume of the hole requiring filling. The unit price for **Patch, Full Depth** includes the cost of forming, providing, placing, consolidating, finishing, and curing the patching mixture.

If using **Patch, Full Depth** in conjunction with overlay, the Department will only pay for patching the area shown on the plans. If full depth patches are required in areas not shown on the plans, unit prices for **Conc, Bridge Deck Ovly** or **Conc, Silica Fume Modified** will include the cost of the concrete material required to fill the full depth patches.

For full depth patches not shown on the plans, the Department will pay for cleaning and coating exposed structural steel, forming (excluding forming required for joint replacement), form removal, and cleanup as extra work. The Department will pay for maintaining traffic under the structure to repair the full depth patch as extra work.

The Engineer will measure **Patching Mortar or Conc** or **Patching Conc**, regardless of the type of mortar or concrete, by volume in place. The unit prices for **Patching Mortar or Conc** or **Patching Conc** include the cost of providing, mixing, placing, vibrating, finishing and curing.

The contract will specify the grade or type of patching material for **Patching Conc** pay items.

The Engineer will measure **Patch, Forming** based on the area of removed concrete. The unit price for **Patch, Forming** includes the cost of forming to retain patching material, except on full-depth patches on bridge decks.

L. **Bridge Decks.**

1. **Bridge Deck Surface Construction.** The Engineer will measure **Bridge Deck Surface Construction** within the limits shown on the plans, without deducting areas of expansion devices and drain castings. The unit price for **Bridge Deck Surface Construction** includes the cost of blast cleaning decks, and consolidating, finishing, texturing, and curing surfacing mixtures, and removing and reinstalling portions of existing guardrails required for access to screed the deck.

2. **Concrete, Silica Fume Modified.** The Engineer will document the quantity of Silica Fume Modified Concrete Mixture (SFMC) and measure based on batch plant tickets with deductions for material wasted or rejected. The unit price for **Conc, Silica Fume Modified** includes the cost of providing and placing overlay concrete on prepared deck substrate, providing insulating blankets, and the required trial batch.

   The Department will not make quantity adjustments or pay for additional trial batches.

3. **Concrete, Bridge Deck Overlay.** The Engineer will document the quantity of Silica Fume Modified Concrete Mixture (SFMC) and measure based on batch plant tickets with deductions for material wasted or rejected. The unit price for **Conc, Bridge Deck Ovly** includes the cost of providing and placing overlay concrete on prepared deck substrate, providing insulating blankets, and the required trial batch.

   The Department will not make quantity adjustments or pay for additional trial batches.

   The Engineer will measure the quantity of Latex Modified Concrete (LMC) mixture by the surfacing mixture volume used for the partial-depth patching and overlay. The Engineer will determine the quantity from the theoretical yield of the design mix and the quantity

documented on the ticket printout for concrete placed and yield tests performed, and will make deductions for material wasted or rejected.

The unit price for **Conc, Bridge Deck Ovly** includes the cost of providing and placing surfacing mixture and insulating blankets.

M. **Top Flanges and Beam Ends, Clean and Coat.** The Engineer will measure **Top Flanges and Beam Ends, Clean and Coat** based on the limits shown on the plans or determined by the Engineer. The unit price for **Top Flanges and Beam Ends, Clean and Coat** includes the cost of cleaning and prime coating top flanges and beam end areas, and protecting the work and environment during cleaning.

N. **Filler Wall Concrete.** The Engineer will measure **Filler Wall Conc** based on plan quantities. The unit price for **Filler Wall Conc** includes the cost of forming walls with weepholes and forming footings with drain holes; providing, placing, finishing, and curing concrete for filler walls, footings, and filler wall extensions; providing and placing expansion joint filler, granular material Class II, and 4-inch concrete slab between walls; and covering drain holes with geotextile.

O. **Embedded Galvanic Anodes.** The unit price for **Embedded Galvanic Anodes** includes the cost of providing and installing anodes in concrete. The Department will pay the Contractor after the Engineer verifies installation as required.

Section 713. BRIDGE REHABILITATION — STEEL

713.01. Description. This work consists of repairing and replacing portions of structural steel bridges.

The terms “beam” and “girder” are used interchangeably in this section.

713.02. Materials. Provide materials in accordance with the following:

Steel Reinforcement..... 905
Structural Steel..... 906
High Strength Bolts, Nuts and Washers..... 906
Timber and Lumber..... 912

Steel for Temporary Supports. Provide temporary hanger rods that meet the requirements of ASTM A193/A193M Grade B7 (AISI 4140). Provide rods with longitudinal Charpy V-notch impact values of 50 foot-pounds at 30 °F. If necessary, heat treat steel to meet the Charpy V-notch impact requirements. The Engineer will reject rods with notches, nicks, or welds.

The Engineer will base rod material acceptance on traceable MTRs.

Provide heavy hex nuts for the temporary hanger rods in accordance with ASTM A563 Grade DH or ASTM A194/A194M Grade 2H, and hardened circular washers in accordance with ASTM F436/F436M.

Provide steel for temporary supports in accordance with ASTM A709/A709M Grade 36 and section 906 unless noted otherwise in the contract.

Sealant for Perimeter of Beam Plates. Select the sealant from the Qualified Products List. Provide sealant in caulking tubes.

Structural Steel for Retrofitting and Welded Repairs. Structural steel material used for retrofitting and welded repairs of bridge main members as defined in subsection 707.01.C must meet longitudinal Charpy V-notch impact test requirements.

Mat Material for Temporary Supports. Provide structural grade material with a minimum flexural strength of 1200 pounds per square foot and a minimum horizontal shear strength of 100 pounds per square inch.

713.03. Construction.

A. **Providing and Fabricating Structural Steel.** Provide and fabricate structural steel retrofits and replacements for existing structures and steel temporary support members in accordance with section 707. Submit shop drawings to the Engineer for approval before fabrication.

Measure the pin dimensions of existing link plates from center-to-center. If pin dimensions differ by more than ⅛ inch from the dimensions shown on the plans, build replacement link plates to match existing dimensions instead of plan dimensions. The Engineer will direct changes to plan dimensions to fit existing dimensions.

Submit a final hanger assembly report to the Engineer that lists the as-built dimensions of the proposed link plates and pins. Demonstrate that tolerances meet the requirements specified in subsection 707.03.D.15. Install bushings in accordance with subsection 707.03.D.16. Assemble and ship pin and link plate pairs as a unit or match mark pairs.

B. **Temporary Supports for Girder Ends.** Fabricate and erect temporary supports as shown in the contract or propose an alternate design. Submit alternate design working drawings and calculations to the Engineer for approval a minimum of 14 calendar days prior to beginning work. Base alternate designs on loads and allowable soil pressures shown in the contract. Alternate designs must be in accordance with the AASHTO *Standard Specifications for Highway Bridges*, 17th edition. A professional engineer licensed in the state of Michigan must seal alternate designs.

The Department reserves the right to verify structural adequacy of fabricated temporary support systems used. Verification may include visual inspection and nondestructive testing by Department personnel. The Department may require MTR submittals for material and shop drawings of original fabrication. Before using temporary supports, make corrections deemed necessary by the Department.

Fabricate and weld temporary supports in accordance with the current AWS D1.1 *Structural Welding Code – Steel*. Welding personnel such as welders, welding operators, and tack welders must be qualified in accordance with AWS D1.1. Additional performance testing is required in accordance with the current MDOT *Welder Certification Program* for non-main member welding. Welder performance testing from agencies not on MDOT's authorized agency list will not be accepted. The period of effectiveness for field welding personnel endorsed through MDOT's *Welder Certification Program* is two years unless welding personnel are not engaged in a welding process for at least six months or a specific reason exists to question the welder's ability. The Engineer may require a confirming performance test during the progress of the work.

Do not weld falsework, form supports, and accessories to structural steel.

Provide hydraulic jacks with a stroke of at least 3 inches and pumps capable of extending jacks full stroke. Equip hydraulic systems with dial gauges that enable determination of the external loads.

Provide hydraulic jacks with locking rings or other positive locking devices to prevent settlement in case of hydraulic failure. Use locking devices during and after jacking cycles until placement of stable shims and removal of loads from jacks.

Maintain temporary supports, including replacing supports in case of partial or complete failure. The Department reserves the right to provide labor, materials, and supervision to restore movement of traffic if the Contractor delays or makes inadequate progress in the repair or replacement of a temporary support, at no additional cost to the Department.

1. **Column-Type Supports.** After erection, but before loading temporary supports, use a plumb line to determine the horizontal offset of the top of the column from the bottom of the column. Determine the horizontal offset of the hydraulic jack from the column centerline. Measure the column and hydraulic jack offsets parallel and perpendicular to the column web. Place jacks and temporary supports at each location so individual offsets and the sum, in each measured direction, do not exceed 1 inch. Consider jack offsets positive, regardless of column offset directions.

   If structure embankment, compacted in place, is not required by the contract, compact the natural ground 9 inches deep, to at least 95 percent maximum unit weight before placing temporary supports.

   Place a leveling course of Class 21AA aggregate, asphaltic cold-patching material, or other material approved by the Engineer before placing temporary supports on paved shoulders or roadways. Compact leveling material to 95 percent maximum unit weight before placing temporary supports.

   The Engineer may direct bracing of temporary supports, based on Contractor methods for performing rehabilitation work.

   Leave jacks in place until installation and operation of link plates and pins. Lines and pumps may be disconnected provided the equipment remains on the project.

   During the first 4 hours after loading, check hourly for settlement of temporary supports. Make subsequent settlement checks daily. To prevent girder ends from subsiding more than $\frac{1}{16}$ inch from the original position, correct by adding shims to temporary supports.

2. **Suspension-Type Supports.** After placing stable shims, the Engineer may approve removing jacks.

   Repair concrete removed for erecting temporary support or to gain access to the girder end, in accordance with section 712 and as approved by the Engineer.

3. **Diaphragm-Type Supports.** Place temporary supports on substructure units as shown on the plans. Equally load and simultaneously advance hydraulic jacks placed in pairs.

   Leave jacks in place until repair or replacement and operation of structural components. Lines and pumps may be disconnected provided the equipment remains on the project.

Propose grouting material and placement procedures to the Engineer for approval. Place grout on substructure units to create a smooth and level bearing surface for temporary supports. Select an H-1 grout material in accordance with section 1005. Form the space for grouting and clean the surface. Mix, place, and cure grout material in accordance with the manufacturer's recommendations. After curing, remove forming material to allow the Engineer to inspect the grouted space. Do not apply load to grout before the grout attains a minimum compressive strength of 4,000 psi.

4. **Salvaging Existing Column Supports.** Existing temporary column supports that are not installed as a part of the contract are the property of the Department. Salvage existing temporary support components as directed by the Engineer.

   Do not cut vertical steel column sections, steel plates, or the timbers during removal of the temporary column supports. Cutting the channel portions of the temporary supports to aid in removal is allowed. Stack salvaged components, as directed by the Engineer, within the project limits for pickup by others.

   All existing supports that are not salvaged are the property of the Contractor.

C. **Pin and Hanger Replacement.**

1. **Measurement of Existing Hanger Assemblies.** Take field measurements of hanger assemblies requiring replacement, submit as-built dimensions and a drawing showing the measured span and girder end to the Engineer.

   Measure existing pin diameters, the distance between pins from center-to-center, and the length, width, and thickness of link plates.

   Check girder web alignment by laying a straight edge across pin plate gaps at the top and bottom of the girder. Measure and report girder offsets.

   Close lanes or shoulders, in accordance with the Michigan Manual of Uniform Traffic Control Devices and the contract, to allow field measurements. Obtain the Engineer's approval for lane and shoulder closures. Do not leave lanes or shoulders closed overnight for field measurements. Do not alter or damage the structure while performing field measurements.

2. **Removal of Existing Hanger Assemblies.** Remove existing hanger assemblies as shown on the plans and in accordance with subsection 204.03.A.5 and this subsection.

   If removing and replacing link plates and pins from more than one girder at a time, do not work on the same end of adjacent girders. Suspenders must remain operational on the girder end opposite removed link plates or pins.

Support girder ends on stable shims, without using hydraulics, before removing components. Remove two pins and two link plates in each assembly. Cut the link plates and pins for removal in accordance with the following:

a. Cut link plates into two pieces with a sloping transverse cut that coincides with the joint opening between girder ends. If cutting link plates at the pin, position a sheet metal shield behind link plates to protect the girder.

b. Place a metal heat shield around pin holes before flame cutting pins. The Contractor may trim pin ends to within no less than 1 inch of girder pin plates. The Contractor may burn a hole through the center of pins to ease removal.

   If damage to the girder pin plate occurs during removal of the pin and hanger assembly, submit a corrective action plan to the Engineer for review and approval prior to beginning repairs. Repairs must be designed by a professional engineer licensed in the state of Michigan. Perform the repairs at no additional cost to the Department.

3. **Installation and Coating of New Hanger Assemblies.** If end diaphragms prevent installation of new pins, flame cut an oblong hole in the web of one end diaphragm using a steel hole template at least ⅛" thick clamped to the channel section. After flame cutting, grind hole edges to a surface roughness no greater than 125 micro-inches per inch root mean square (rms). Clean and coat holes and leave in the finished structure. Do not loosen or remove end diaphragms.

   After removing pins, grind notches and deep pits in the girder pin plate around the periphery of the hole to a surface roughness no greater than 125 micro-inches per inch rms. Before installing new hanger assemblies, clean and coat girder ends within 3 feet of each side of the centerline of pin holes. Clean and coat in accordance with section 715.

   Assemble new hanger assemblies before removing falsework shims.

D. **Bearing Stiffeners at Temporary Supports.** Erect bearing stiffeners at temporary supports in accordance with section 707. Achieve bearing fit at top and bottom flange by means of grinding or milling. Leave stiffeners in place as a permanent part of the structure. Field drill bolt holes in existing girders. Do not flame cut or air arc gouge existing girders or proposed attachments. Complete field drilling before cleaning and prime coating faying surfaces.

Before erecting bearing stiffeners, clean and coat faying surfaces and other contact surfaces. Faying surfaces consist of surfaces internal to a connection that bear on an adjacent surface. Clean and coat faying surfaces and other contact surfaces in accordance with section 715.

After bolting bearing stiffeners in place, clean and coat exposed areas in accordance with section 715. Clean and coat immediately after erection or during cleaning and coating of the remainder of the girder.

E. **Retrofit Structural Steel.** Erect retrofit structural steel in accordance with subsection 707.03.E. Leave retrofit structural steel in place as a permanent part of the structure. Field drill bolt holes in existing steel. Do not flame cut or air arc gouge the existing steel or attachments. Complete field drilling before cleaning and prime coating faying surfaces.

Before erecting retrofit structural steel, clean and coat faying surfaces and other contact surfaces. Clean and coat retrofit structural steel in accordance with section 715.

After bolting structural steel in place, clean and coat the exposed areas in accordance with section 715. Clean and coat immediately after erection or during cleaning and coating the remainder of the girder.

F. **Sealing the Perimeter of Beam Plates.** Before applying sealant, clean and dry surfaces between repair plates or angles and beams and other surfaces requiring sealant. Apply sealant along the perimeter of bolted or riveted plates or angles on steel beams, as directed by the Engineer. Apply sealant over the intermediate coat when dry to the touch.

Apply sealant when air and surface temperatures are above 40 °F. Immediately after applying sealant, tool to form a 5⁄16 inch fillet and force it against contact surfaces. Completely fill pits and depressions in steel beams at the seam line with sealant, regardless of width and depth. Apply a top coat over sealant after the intermediate coat cures.

G. **Heat Straightening Damaged Bridge Steel.** Select a MDOT approved heat straightening contractor from the *Special Provision for Heat Straightening Damaged Bridge Steel*. Submit MDOT Form 0388 for review and approval by the Engineer prior to heat straightening. Do not start heat straightening before the Engineer approves the heat straightening plan. Notify the Engineer at least 48 hours before beginning the heat straightening work. Ensure final straightened members retain as little residual stress as possible.

If an area is exposed to precipitation, do not perform heat straightening unless it is enclosed as approved by the Engineer. Apply heat at a temperature no greater than 1,200 °F and monitor with contact thermometers, pyrometric sticks, or other heat indicating devices approved by the Engineer. Supply heat indicating devices and make available to the inspector. Provide torch tips with a diameter from ¾ inch to 1 inch. Only heat plastic yield zones. Use line, strip, spot, and “V” triangular heats. Do not use a “V” angle greater than 20 degrees. Limit the base of the “V” heat to 6 inches. Heat the “V” from the apex, in a serpentine pattern to the base so only the area directly under the torch shows color.

After each heat straightening cycle, allow steel to cool to below 250 °F before beginning the next heating cycle. Do not force cool.

Calibrate temperature sensing devices and jacking equipment. Submit a calibration certificate no greater than 12 months old to the Engineer prior to heat straightening and whenever there is reason to question accuracy. Provide jacking equipment with gauges.

Straighten with as little mechanical force as possible. Use constraints that do not resist contraction during the cooling phase and that do not produce local buckling of compression elements during the heating phase.

Eliminate bends, creases, folds, and dents in web plates, flange plates, angles, stiffeners, channels, gusset plates, and torn areas.

Straighten the flange plates and angles from the web to within ¼ inch of the tilt rotation at the edges with ½ inch of sweep over 20 feet, ¾ inch at the point of impact. Straighten the web to less than ½ inch out of plumb. Reduce localized deflections in the web to no greater than ½ inch vertically and horizontally measured with a straight edge.

Straighten webs to the required tolerances before attaching cross frames or other lateral restraint devices. Do not force beams and girders into position and attach to cross frames to hold in position.

Do not flame cut existing structural steel, except as shown on the plans or approved by the Engineer.

Grind burrs, nicks, gouges, and scrapes to 125 micro-inches per inch rms and taper to the original surface using a 1:10 slope. Provide surface quality in accordance with ASTM A6/A6M. Report cracks or tears in beams and girders, or in other structural steel members not shown on the plans, to the Engineer. The Engineer will direct the repair methods.

Prior to heat straightening, perform visual testing (VT) on the entire damage areas specified on the plans by an AWS Certified Welding Inspector (CWI). All weldments located in or adjacent to damage areas and all weldments connecting components (clip plates, connection plates, intermediate stiffeners, etc.) that connect the damaged beam/girder to other beam/girder lines as determined by the Engineer must be completely VT by a CWI and completely magnetic particle testing (MT) by an American Society for Nondestructive Testing (ASNT) Level II Technician. The testing must be performed in accordance with the current AASHTO/AWS D1.5, *Bridge Welding Code,* except as modified herein. Perform MT in accordance with ASTM E709 with dry powder using the yoke method.

After heat straightening, perform VT on the entire heat straightened areas. All weldments located in or adjacent to damage areas and all weldments connecting components (clip plates, connection plates, intermediate stiffeners, etc.) that connect the damaged beam/girder to other beam/girder lines as determined by the Engineer must be completely VT and MT as specified above.

Complete and submit MDOT Form 0395 to the Engineer for review and approval before performing field welding. Provide adequate notice to allow the Engineer to witness the crack repair work. Perform inspection and testing at no additional cost to the Department.

H. **Rocker Realignment.** Realign tilted rockers as shown on the plans and specified in this subsection. Coordinate the rocker realignment sequencing with proposed bridge repairs as shown on the plans and approved by the Engineer.

If realigning rockers of more than one girder at a time, do not work on the same ends of adjacent girders. Do not work on both ends of the same girder.

Do not jack existing girder ends more than ⅛ inch above final rocker position. Before removing rockers from girders, support girder ends on stable shims without using hydraulics.

Remove existing sole plate welds by grinding. Do not flame cut or air arc gouge existing welds, except as shown on the plans and approved by the Engineer.

Before welding sole plates in final position, clean and prime coat faying surfaces and other contact surfaces. Clean and coat faying surfaces and other contact surfaces in accordance with section 715.

Position sole plates with rockers to provide the correct rocker tilt using rocker tilt tables shown on the plans and approved by the Engineer.

Field weld existing sole plates to girder flanges in accordance with subsection 707.03.E.7. Inspect and test field welds in accordance with subsection 707.03.E.7.e.

I. **Cutting Simple Span Beam Ends.** Coordinate sequencing of beam end cutting with proposed bridge repairs as shown on the plans and approved by the Engineer.

Use a plasma cutting torch to cut no greater than ½ inch off each beam end to provide vertical beam ends 1 inch apart. Use a straight edge or guide to provide horizontal and vertical control during cutting of beam flanges and webs. Mark cut lines on existing beams to verify that cutting operations do not damage existing sole plates and bearing stiffener welds.

Do not damage or remove existing welds on sole plates or bearing stiffeners. Replace damaged welds at no additional cost to the Department. Field weld in accordance with subsection 707.03.E.7. Inspect and test field welds in accordance with subsection 707.03.E.7.e.

Grind burrs, nicks, gouges, and scrapes to 125 micro-inches per inch rms on cut edges.

After cutting beam ends and completing field welding, clean and prime coat exposed areas in accordance with section 715.

J. **Structural Steel Welded Repair.** Erect structural steel components in accordance with subsection 707.03.E. Remove damaged or deteriorated structural components and replace with proposed structural components as shown on the plans and specified in section 204.

Remove structural steel using mechanical methods, plasma cutting, or air-arc gouging.

Do not flame cut existing structural steel, except as shown on the plans.

Prepare existing structural steel to accept proposed structural components and for field welding. Preparation may include field drilling coping holes and grinding, as shown on the plans.

Field weld in accordance with subsection 707.03.E.7. Inspect and test field welds in accordance with subsection 707.03.E.7.e.

After welding structural steel in place, clean and prime coat exposed areas in accordance with section 715.

Clean and coat immediately after erection of structural steel components, or during cleaning and coating of the remainder of the girder.

713.04. Measurement and Payment.

Pay Item	Pay Unit
Structural Steel, Furn and Fab, Pin and Hanger	Pound
Hanger Assembly, Field Measurement	Each
Hanger Assembly, Rem and Erect	Each
Heat Straightening Steel (Structure Identification)	Lump Sum
Stiffeners, Furn, Fab, and Erect	Pound
Structural Steel, Retrofit, Furn, Fab, and Erect	Pound
Support, Column, Temp	Each
Support, Suspension, Temp	Each
Support, Diaphragm, Temp	Each
Beam Plate, Seal Perimeter	Foot
Rocker, Realign	Each
Cutting Beam Ends, Simple Span	Each
Structural Steel, Welded Repr, Furn, Fab, and Erect	Pound
Salv Support, Column, Temp	Each

A. **Hanger Assembly.** The unit price for **Hanger Assembly, Field Measurement** includes the cost of taking and recording measurements, maintaining traffic during measuring, and providing the Engineer with a location drawing showing the span and girder end where measurements were taken.

The unit price for **Hanger Assembly, Rem and Erect** includes the cost of the following:

1. Removing two pins, two link plates, and shear locks;
2. Cleaning and applying and curing coating within 3 feet each side of the centerline of pin holes;
3. Installing two new link plates and two new pins;
4. Protecting completed joint areas with enclosures, if required; and
5. Protecting newly painted areas adjacent to joint areas.

The unit price for **Structural Steel, Furn and Fab, Pin and Hanger** includes the cost of structural steel required for pins and link plates in rehabilitation work. The Engineer will measure steel as specified in subsection 707.04 for structural steel, furnish and fabricate pay items.

The Engineer will measure, and the Department will pay for structural steel required for pins and plates in new construction as specified in subsection 707.04 for structural steel, furnish and fabricate pay items.

The Engineer will measure, and the Department will pay for **Bushing** as specified in subsection 707.04.

B. **Heat Straightening Steel.** The unit price for **Heat Straightening Steel** includes the cost of attaining the required structural steel position, field welding, and nondestructive testing in accordance with subsection 707.03.E.7. The Department will pay for crack repair not shown on the plans as extra work.

C. **Stiffeners, Furnish, Fabricate, and Erect.** The unit price for **Stiffeners, Furn, Fab, and Erect** includes the cost of field drilling, installing bearing stiffeners on existing steel, and cleaning and prime coating faying and other contact surfaces.

The Engineer will measure structural steel for stiffeners as specified in subsection 707.04 for structural steel, furnish and fabricate pay items.

D. **Structural Steel, Retrofit, Furnish, Fabricate, and Erect.** The unit price for **Structural Steel, Retrofit, Furn, Fab, and Erect** includes the cost of field drilling, installing new structural steel on existing steel, cleaning and prime coating faying and other contact surfaces.

The Engineer will measure structural steel required for retrofit as specified in subsection 707.04 for structural steel, furnish and fabricate pay items.

E. **Support, Temporary**. The unit price for **Support, __, Temp**, of the type required, includes the cost of providing, placing, maintaining, and removing materials and equipment, and concrete removal and replacement to access temporary supports. The unit price for **Support, __, Temp**, of the type required, includes the cost of lateral bracing as detailed in the contract. The quantity of **Support, __, Temp**, of the type required, indicates the number of girder ends requiring support; not the number of temporary support devices required.

F. **Rocker, Realignment.** The unit price for **Rocker, Realign** includes the cost of removing existing welds, determining correct rocker tilt, field welding, inspecting and performing nondestructive testing in accordance with subsection 707.03.E.7, and cleaning contact surfaces.

G. **Cutting Beam Ends, Simple Span.** The unit price for **Cutting Beam Ends, Simple Span** includes the cost of cutting existing beam ends, field welding, and performing nondestructive testing in accordance with subsection 707.03.E.7, cleaning and prime coating exposed steel, and completing the work for cutting two simple span beam ends at one location.

H. **Structural Steel, Welded Repair, Furnish, Fabricate, and Erect.** The unit price for **Structural Steel, Welded Repr, Furn, Fab, and Erect** includes the cost of removing, disposing, and replacing damaged or deteriorated structural steel components as shown on the plans, field drilling, field welding, nondestructive testing in accordance with subsection 707.03.E.7, and cleaning and prime coating structural steel components.

The Engineer will measure structural steel required for welded repair as specified in subsection 707.04 for structural steel, furnish and fabricate pay items.

I. **Salvage Support, Column, Temp.** The unit price for **Salv Support, Column, Temp** includes the cost of removing and stockpiling temporary column supports, steel base plates, and timbers.

Section 714. TEMPORARY STRUCTURES AND APPROACHES

714.01. Description. This work consists of designing, constructing, maintaining, removing, and disposing of temporary structures and approaches.

714.02. Materials. None specified.

714.03. Construction.

A. **Location.** The Engineer will direct clearing of obstructions to vision along temporary roadways. Locate construction materials, equipment, and buildings to prevent interference with clear vision.

B. **Construction.** Design, construct, and maintain temporary structures to carry legal loads allowed on highways in accordance with Michigan state statutes and AASHTO *Standard Specifications for Highway Bridges*, 17th edition. A professional engineer licensed in the state of Michigan must seal the design. Submit the design to the Engineer for approval.

Fabricate structural steel in accordance with section 707, except that shop cleaning, and coating or galvanizing is not required. Fabricate structural prestressed concrete in accordance with section 708.

Construct deck surfaces within a tolerance of ¼ inch, as measured with a 10-foot straight edge. Construct deck surfaces of concrete, asphalt, or timber. Level high spots or depressions using methods approved by the Engineer.

Provide two-way structures, unless otherwise shown on the plans or directed by the Engineer.

1. **One-Way Structure.** Provide a clear roadway, at least 12 feet wide, measured between inside curb faces, at right angles to the roadway centerline. Provide at least 13 feet between bridge railing inside faces.

2. **Two-Way Structure.** Provide a clear roadway, at least 20 feet wide, measured between inside curb faces at right angles to the roadway centerline. Provide at least 21 feet between bridge railing inside faces.

C. **Maintenance.** Maintain temporary structures and approaches in accordance with subsection 104.07 until contract completion or new structures are opened to traffic.

Protect traffic and the work in accordance with section 812. Maintain temporary structures and approaches, including replacement for partial or complete failures.

The Department reserves the right to provide labor, materials, and supervision to restore movement of traffic if the Contractor delays or makes inadequate progress in the repair or replacement of a temporary structure or approach, at no additional cost to the Department.

D. **Removal and Disposal.** Take ownership of material from temporary structures and remove from the project before contract completion. Dispose of embankment and surface of temporary approaches in accordance with subsection 205.03.P, except if the work requires this material to be incorporated as shown on the plans or as directed by the Engineer. Remove pilings or other supports in accordance with subsection 706.03.O.

714.04. Measurement and Payment.

Pay Item	**Pay Unit**
Structures, Temp (Structure Identification)	Lump Sum
Structures, Temp, Rem (Structure Identification)	Lump Sum

The Engineer will measure **Structures, Temp** by grouping material included in the structure and measuring as a unit. The unit price for **Structures, Temp** includes the cost of designing, constructing, and maintaining temporary structures.

The unit price for **Structures, Temp, Rem** includes the cost of removing and disposing of temporary structures.

The Department will pay for approaches at the unit prices for applicable pay items. Payment for approaches includes constructing and maintaining approaches.

The Engineer will measure and the Department will pay for removing and disposing of temporary approaches as **Obliterating Roadway** in accordance with subsection 207.04.

Section 715. CLEANING AND COATING EXISTING STRUCTURAL STEEL

715.01. Description. This work consists of cleaning and coating metal surfaces of existing steel structures, and containing, storing, and disposing of spent material. Spent material includes paint chips, abrasive particles, dust, and debris, resulting from cleaning operations. Metal surfaces of existing steel structures include downspouts, sign supports, and brackets; but do not include railings, chain link fencing, utility conduits, and associated brackets and hangers.

715.02. Materials. Provide materials in accordance with the following:

Sealant for Perimeter of Beam Plates 713
Epoxy Grout 914
Bridge Coating System 915

Use a Department-approved low dusting abrasive or steel grit or a combination of these, for blast cleaning that produces a uniform surface profile of 1.0 mils to 2.8 mils measured using extra coarse replica tape. Select a low dusting abrasive from the Qualified Products List (QPL). Any steel grit that produces a surface profile from 1.0 mils to 2.8 mils and is free of dust, oil, grease, corrosion, non-magnetic matter and other contaminants is allowed. Supply a technical data sheet for the selected abrasive and/or steel grit to be utilized.

When steel grit is used as a recyclable abrasive, it must be cleaned to the requirements of SSPC-AB 2, *Cleanliness of Recycled Ferrous Metallic Abrasives*. When recycling an abrasive from the QPL, it must be cleaned to the requirements of SSPC-AB 1, *Mineral and Slag Abrasives*.

Use an organic or alternative zinc-rich primer to coat internal surfaces of slip critical bolted connections only. Use a primer from the same manufacturer that supplied the coating system for the remainder of the structure and meets Class B (0.5 or greater) slip coefficient requirements of the Research Council on Structural Connections *Specification for Structural Joints Using High-Strength Bolts*. Before coating, submit the Slip-Coefficient and Creep Resistance Test Certificate to the Engineer. The test certificate must be from an independent laboratory identifying that the primer meets Class B slip coefficient. The test certification must identify the minimum cure time, maximum allowed dry film thickness (DFT), maximum allowed thinner requirements, and any other necessary application parameters. Use the same primer on both connecting faying surfaces. Select materials from the Qualified Products List.

Use a tie coat to promote adhesion over galvanized surfaces, if recommended by the coating manufacturer. Apply the tie coat by a method and of thickness as recommended by the coating manufacturer.

For galvanized surfaces to receive additional coatings, repair damaged galvanized surfaces with a zinc-rich primer from the same manufacturer as the coating system and that meets ASTM A780/A780M.

Select the sealant for perimeter of beam plates from the QPL. Provide sealant in caulking tubes.

Where potable water is required it must be in accordance with section 911.

715.03. Construction. Do not field coat from October 1 to May 1 in Superior and North Regions, or from October 15 to April 15 in the remaining regions unless otherwise approved by the Engineer. Comply with temperature restrictions specified in section 915.

Refer to SSPC *Painting Manual*, Volume 1 and Volume 2 for definitions of cleaning criteria and other coating terms.

Provide and erect scaffolding to allow inspection of steel before and after coating. Erect scaffolding to prevent damage to the structure and comply with MIOSHA requirements.

Obtain the Engineer's approval for rubber rollers, or other protective devices used on scaffold fasteners. Do not use metal rollers, clamps, or other fasteners that may mar or damage the steel or coating.

A. **Protection of Work and Environment During Cleaning Operations.**

1. **Training Program.** Provide a documented training program covering the handling and storage of hazardous waste. Provide a copy of this program to the Engineer before beginning cleaning operations and keep a copy at the project.

2. **Worker Training.** Train every employee involved in cleaning the steel structure (i.e., generating waste); or cleanup, handling, and storage of spent material. Provide training in the management of hazardous waste, as required by the Resource Conservation and Recovery Act 42 USC 6901 et. seq. and 40 CFR 265.16. Keep training records available at the project.

3. **Hazardous Waste Contingency Plan.** Develop a contingency plan for generating, handling, and storing hazardous waste in accordance with 40 CFR Part 265, Subpart C and Subpart D. Address containment and cleanup of accidental spills or releases to the environment. The plan must list an emergency coordinator and a telephone number to reach this person 24 hours a day, 7 days a week.

   Submit a copy of the contingency plan to the Engineer and keep a copy at the project.

4. **Labeling of Spent Material Containers.** Provide and place the required labeling for hazardous waste storage containers. Label containers before using for hazardous waste storage, and list the date waste is first placed into each container. Make the labels visible without moving containers. The Engineer will provide the EPA generator number required by Part 111, Hazardous Waste Management, MCL 324.11101 et seq. and Rule R299.9306, (1), (b) and (c).

5. **Weekly Inspection Log.** If temporarily storing hazardous waste on the project, maintain an inspection log of the storage area and containers. Keep the log on-site and update weekly to document inspection and security of the storage area and containers in accordance with 40 CFR 265.174.

6. **On-Site Records.** Keep the following records on-site and available until blast cleaning is completed and spent material is removed from the job:

   a. Hazardous waste training program;
   b. Worker training records;
   c. Hazardous waste contingency plan;
   d. Weekly inspection log;
   e. Waste characterization reports; and
   f. Waste disposal manifests.

   Keep the records near the hazardous waste storage area in a conspicuous location and make available for inspection and review.

   On-site records may be placed in a clearly marked, closed container, next to the stored hazardous waste.

7. **Storage in Gondolas, Roll-off Boxes, or Barrels.** Store spent material, hazardous or nonhazardous, at the bridge site, secured and protected from weather, accidental spills, or vandalism. Locate the storage containers on a gradually sloped, free draining area, not immediately next to a traffic lane, water course, or direct drainage ditch or structure. Do not place storage containers in standing water. The Engineer will review proposed storage areas before cleaning operations begin.

   Keep waste containers closed and covered, except during addition or removal of spent material. Label each container as hazardous or nonhazardous material storage and include the accumulation start date, as required.

   Follow the hazardous waste contingency plan and immediately clean up spent material that spills onto the ground while depositing into storage containers.

   a. **Gondolas or Roll-off Boxes.** Cover each gondola or roll-off box with a cover integral to the gondola or box and a continuous, water repellent tarpaulin. Use support ribs, or other means to prevent water from ponding on the tarpaulin.

   b. **Barrels.** Seal barrels storing hazardous waste with bolt-locking rims. Elevate barrels on pallets and arrange in single or double rows, allowing access for inspection and viewing of the labels. Bind the rows of barrels together with rope, cable, or binding straps to prevent tipping over. Cover rows of barrels with waterproof tarpaulins, held in place in

accordance with 40 CFR 264.175 (c) and 40 CFR 265, Subpart I; Part 111, Hazardous Waste Management, MCL 324.11101 et seq. and Rule R299.9306, (1), (e) and (f).

8. **Disposal of Spent Material.** Notify the Engineer of the intent to sample. Sampling must be conducted by a SSPC Competent Person and witnessed by the Engineer. Take separate samples of spent material collected and stored in waste containers, dust collected from bag house filters, and shower water. Prepare a chain of custody form for each sample. Ship samples, with their chain of custody forms, in a tamper proof container or bag sealed and witnessed by the Engineer, to a National Environmental Laboratory Accreditation Program (NELAP) accredited laboratory for testing according to the Environmental Protection Agency, Toxicity Characteristic Leaching Procedure (TCLP).

   Use test results to characterize the spent material, bag house dust, and shower water for disposal.

   Return the chain of custody form with the test results to the Engineer. The Engineer may sample and test spent material, bag house dust, and shower water during the project.

   Dispose of spent material and bag house dust characterized as hazardous waste at a licensed hazardous waste disposal facility. Dispose of spent material and bag house dust, characterized as nonhazardous waste, at an approved Type II landfill in accordance with Part 115, Solid Waste Management, MCL 324.11501 et seq.

   Dispose of shower water, characterized as a hazardous waste, at a licensed hazardous waste disposal facility. Dispose of shower water characterized as nonhazardous as a liquid industrial waste at an approved licensed liquid industrial waste disposal facility in accordance with Part 121, Liquid Industrial By-Products, MCL 324.12101 et seq.

   Provide copies of waste manifests and disposal receipts to the Engineer.

   Dispose of spent material within 90 days from the date the spent material is first placed in the container.

   The Department may remove and dispose of hazardous and nonhazardous waste and back-charge the Contractor for the work if the Contractor is untimely in removing waste in accordance with 40 CFR 262; Part 111, Hazardous Waste Management, MCL 324.11101 et seq., and Rule R299.9306.

B. **Containment Requirements.**

1. **General Requirements.** Clean steel structures using total enclosure. Protect pedestrians, vehicles and other traffic on or under the structure, and workers in accordance with subsection 104.07.B. Include a barrier system that protects against the following:

a. Direct, or indirect blasting of vehicles, water vessels, and pedestrians;
b. Abrasive material and debris falling on the traveled portions of the pavement or into waterways; and
c. Abrasive material and debris spreading into areas where it may create a traffic hazard.

The Contractor is responsible for damage to vehicles, persons, property, or the environment in accordance with subsection 107.07.

Provide total containment of portions of the bridge during cleaning and vacuuming. Contain spent material resulting from cleaning operations. Use tarpaulins or other Department-approved material to enclose portions of the structure undergoing cleaning. Use tarpaulins made of an airtight material, and secure tightly and continuously at the seams. Do not use burlap or open web materials. Extend the enclosure from the bottom of the deck to ground level or to the level of a solid work platform and fasten to prevent lifting or opening by the wind. Clamp seams and laps on tarpaulins or sheeting together along the length of the seams or laps to prevent material or dust from escaping the enclosed area.

For work completed in multiple enclosure set-ups for a single element, overlap enclosures at least 1 foot between successive stages.

Provide artificial white lighting in the enclosure to illuminate active work surfaces to at least 50 foot-candles during surface preparation and coating application, and at least 150 foot-candles during inspection.

Design the required enclosure and provide air flow and dust filtering equipment. The Engineer will evaluate the performance of the design on its ability to prevent the visible release of spent material and to provide ventilation to ensure worker safety.

Maintain negative pressure inside the enclosure to prevent spent material from leaving the enclosure during cleaning. Maintain air flow through the enclosure to provide visibility and a safe working environment for blasting operators. Provide limited air intake openings in the enclosure during the operation of air moving equipment. Filter air exhausted from the enclosure through a portable truck mounted filtering system or dust collectors. Clean filters or dust collectors before delivery to the project and before removal from the project. Obtain the required state and local air quality and noise ordinance permits for operating air-filtering equipment at the bridge site. Do not discharge dust from the filter exhaust, dust collectors, or vacuum truck.

Place ground cloths under the enclosed area and extend at least 10 feet beyond the enclosure edges, but not into open traffic lanes. Provide ground cloths with sealed seams or laps. Collect spent material that settles on ground cloths from work platforms and enclosures.

If protective devices do not serve the intended purpose, suspend work until corrected. If the Engineer determines threatening weather conditions may cause a release of spent material

into the surrounding environment, the Engineer will shut down cleaning operations and require immediate cleanup of spent material in the enclosure.

Prevent the release of spent material from the tarpaulins and other components of the containment enclosure during relocation or removal. Mechanically clean or vacuum the dust contaminated portions before moving. Protect workers from exposure to lead-bearing dust during moving or removal work.

2. **Bridges Over Waterways.** For cleaning bridges over waterways, provide the following measures in addition to the requirements of subsection 715.03.B.1:

a. Provide a stable barge in the water directly under the area enclosed for cleaning. Size and secure the barge to provide freeboard and stability to preclude the possibility of capsizing or sinking. Evenly distribute equipment and material loads on the barge. Extend containment enclosures to the level of the barge and secure to prevent release of spent material into the waterway. Cover the surface of the barge with ground cloths to allow collection of spent material.
b. If it is impractical to use a barge, erect a temporary work platform under containment enclosures to collect spent material. Extend containment enclosures to the level of the temporary platform and secure to prevent release of spent material. Before installation, submit working drawings for the proposed work platform in writing to the Engineer for review.
c. Stretch a floating boom across the waterway 200 feet from the bridge, on the downstream and downwind side of the bridge. Collect, store, and dispose of spent material that accumulates at the booms as specified for other waste generated by cleaning operations.

3. **Cleanup and Storage of Spent Material.** Clean spent material in the containment enclosure at the end of each work day. Clean spent material on areas to be coated and adjacent to work areas prior to coating. Clean ground cloths. Immediately clean spent material released outside the enclosure in accordance with the hazardous waste contingency plan.

Place spent material in storage containers.

C. **Cleaning Structures.** Shield and protect utility pipes, conduits. and other items attached to the structure not requiring cleaning and coating. Notify affected utility companies at least 48 hours before beginning blast cleaning operations. Shield or mask freshly coated surfaces, railings, galvanized fencing, appurtenances, and adjacent concrete, not requiring cleaning and coating. Wire brush coated steel surfaces damaged by blasting or, if visibly rusted, re-clean to a near-white or bare metal condition. Vacuum and re-prime wire brushed or blast cleaned surfaces.

Remove and dispose of loose concrete from the bottom of deck slabs, fascia, concrete diaphragms, and beam perimeters at dependent backwalls. If possible, remove concrete with hand-held, non-power tools.

Remove foreign matter (other than grease and oil) by one or a combination of the following: abrade, scrape, or brush with stiff fiber or wire brushes. Cleaning with solutions of appropriate cleaners is permitted with Engineer approval, and provided that the solution cleaning is followed by a potable water rinse. Remove all visible oil, grease, drawing and cutting compounds, and other soluble contaminants from steel surfaces in accordance with SSPC-SP 1, *Solvent Cleaning*. Clean surfaces to SSPC-SP 10, *Near White Blast Cleaning* or SSPC-SP 11, *Power Tool Cleaning to Bare Metal*. Remove fins, tears, slivers, and burred or sharp edges that are present on steel members or that appear during blast cleaning in accordance with SSPC-SP 11. Provide a 1.0 to 2.8 mil surface profile to the area.

Scaling hammers may be used to remove heavy scale on existing structures. Do not use chipping hammers.

The Engineer will use the visual standard in accordance with SSPC-VIS 1 *Guide and Reference Photographs for Steel Surfaces Prepared by Dry Abrasive Blast Cleaning*, SSPC-SP 10, or SSPC-VIS 3*, Guide and Reference Photographs for Steel Surfaces Prepared by Hand and Power Tool Cleaning*, SSPC-SP 11 that corresponds to the initial rust condition, to determine acceptable steel cleanliness.

Verify that the compressed air used during the blast cleaning, double blowing, and coating operations is free of oil and moisture contamination in accordance with ASTM D4285. Use either an absorbent or a nonabsorbent white collector positioned within 24 inches of the air-discharge point, centered in the air stream. Allow air to discharge onto the collector for a minimum of 1 minute. Visually examine the collector for the presence of oil and/or water. Conduct the test at least one time per shift for each compressor system in operation in the presence of the Engineer. If air contamination is evident, make adjustments to achieve clean, dry air. Examine the work performed since the last acceptable test for evidence of defects or contamination due to contaminated compressed air. Contaminated work must be repaired at no additional cost to the Department.

Provide a uniform blast profile from 1.0 mil to 2.8 mils, measured on the structural steel using coarse and extra coarse replica tape.

When the Contractor's blasting process produces a surface profile outside specified profile range, blast a test panel to demonstrate that the proposed blasting process produces a surface profile of 1.0 mil to 2.8 mils. Supply a non-blasted, non-corroded piece of similar grade steel at least 1 foot by 1 foot by ¼ inch for the test panel. Blast clean test panel using the same abrasives, pressures, and equipment to be used on the structure. Obtain the Engineer's approval for the resulting profile before continuing.

Remove abrasive and coating residue from steel surfaces with a commercial grade vacuum cleaner equipped with a brush-type cleaning tool, or by double blowing with partial vacuuming. If using the double blowing method, vacuum the top surfaces of structural steel, including flanges, longitudinal stiffeners, splice plates, and hangers after completing double blowing. Maintain the

steel dust free and apply prime coat as soon as possible after the blasted surface has been cleaned and before degradation and/or contamination has occurred and within 8 hours of cleaning.

D. **Coating Structural Steel.**

1. **Applying the Coating.** After the Engineer approves cleaned surfaces, spray apply the coatings using the manufacturer's recommended nozzles and pressures. Use wet film thickness gages in accordance with ASTM D4414 to monitor the thickness of each coat at the time of application. Provide a DFT of 4.0 mils to 8.0 mils for primer coat, 3.5 mils to 7.0 mils for intermediate coat, and at least 2.0 mils for the top coat. Apply the intermediate and top coats to provide complete coverage with uniform color and appearance. If the DFT exceeds the maximum, sand the areas to below the maximum thickness and clean before applying subsequent coats.

   Use a Type 2 electronic gage per SSPC-PA 2, *Procedure for Determining Conformance to Dry Coating Thickness Requirements* to measure the DFT. Calibrate the gage with a plastic shim with the same thickness as the minimum DFT, placed on a smooth section of newly cleaned steel. Recoat areas with less than the required minimum primer DFT.

   Protect wet coating against damage from dust and other deleterious material.

   Schedule blast cleaning and coating to minimize the amount of dust and other contaminants that may fall on to newly applied wet coatings.

   Clean accumulated dirt from previously coated surfaces and achieve approval from the Engineer before applying subsequent coats. If the Engineer determines the surface is unfit for further coating after initial cleaning, clean the surface with a commercial detergent, rinse with potable water, and allow to dry for at least 24 hours before continuing.

   If coating applications result in runs, bubbles, or sags, apply coating using multiple passes of the spray gun, and allow several minutes between each pass.

   Brush out runs and sags immediately, or remove and recoat the surface. Repair bubbles, pinholes, craters, and other defects by sanding the area and applying coating.

   Remove all dry spray by sanding.

   Correct coating the Engineer determines unsatisfactory. Coating performed prior to Engineer approval of cleaned surfaces is subject to rejection.

   Apply sealant along the perimeter of beam plates in accordance with subsection 713.03.F.

Clean galvanized components, including nuts, bolts, and washers, to a SSPC-SP 1 condition. Prepare the galvanized surface according to the coating manufacturer's recommendation, and coat with intermediate and top coats. Apply the tie coat by a method and of thickness as recommended by the coating manufacturer.

2. **Coating Faying Surfaces and Connections.** Faying surfaces consist of surfaces internal to a connection that bears on adjacent surfaces.

   Coat new connections, and disassembled connections in existing structures. Apply the prime coat the same way and to the same thickness as on the adjacent structural steel. Mask faying surfaces during subsequent coating operations.

   Coat slip critical connections in accordance with section 716.

   Perform final vacuuming of the connection immediately before assembly. If vacuuming does not remove accumulated dust and dirt, or the Engineer determines the surface unfit for bolting, clean the surface. Scrub the surface with a mild detergent solution, rinse with potable water, and allow it to dry before assembling connections. After assembling the connection, blast clean and coat exposed areas of the connection. Clean and coat immediately after erection, or when blast cleaning and coating the remainder of the structure.

3. **Cure Times for Coatings.** Cure coatings for the minimum cure times specified in subsection 915.04.A. Follow the manufacturer's recommended maximum cure time, except do not allow more than 21 calendar days between coat applications. If the maximum time between coats is exceeded, blast clean newly coated surfaces and recoat at no additional cost to the Department.

4. **Protection of Work and Environment During Coating Operations.** Protect portions of the structure, including superstructure, substructure, slope protection, and highway appurtenances from spatter and overspray of coating material. Shield utility pipes, conduits, and other items attached to the structure not requiring coating.

   Protect pedestrian, vehicular, water vessels, and other traffic in accordance with subsection 104.07.B.

   If protective devices do not serve the intended purpose, the Engineer may suspend work until the Contractor makes corrections.

5. **Stenciling Requirement.** When coating is complete, stencil the structure number and MDOT ID, completion date (month and year), and coating type onto the structure. On structures fabricated from ASTM A588/A588M steel, stencil "A 588" just above the completion date. For partial painting projects, stencil the letter "P" before the coating type (e.g., 8/20-P4). See Figure 715-1 for an example.

(4812) S01-41029
A 588
8/20-P4

Figure 715-1: Stencil Example

Use black urethane spray paint and 4-inch numbers for stenciling. Use a product compatible with the coating system.

Stencil the characters on the inside of each fascia beam at the approaching end of the structure. Place markings at least 10 feet above ground or fill slope elevations and at least 10 feet from abutments.

If not completely coating the fascia beam, stencil the designation on the inside of each fascia beam on the approaching traffic side, in the lower right corner of the newly painted section. Place markings completely within the partial coating limits, at least 3 inches above the bottom flange and with the stenciling ending within 3 inches of the right edge of the newly painted area.

If these locations are inconsistent with the newly painted areas of the structure, the Engineer will designate the stencil location.

6. **Solvents.**

   a. **Solvent Reuse Determination Procedures.** Prepare a written Solvent Reuse Determination Procedure that complies with Part 111, Hazardous Waste Management, MCL 324.11101 et seq., and Rule R299.9202. Provide a copy of this procedure to the Engineer before performing field coating.

      In the Solvent Reuse Determination Procedures, include the methods for determining if the solvent is reusable; applications for use of reusable solvent; and a statement of effectiveness of the reusable solvent in each application cited.

      Include in the Solvent Reuse Determination Procedure documentation certification of agreement to:

      i. Maintain records regarding solvent reuse on a “Bridge Painting Solvent Tracking Log;”
      ii. Handle the solvent in a manner consistent with the product status as either waste or reusable solvent;
      iii. Reuse solvent within 1 year of the initial use; and
      iv. Reclaim only solvent after reusing it.

b. **General.** During performance of the work and before leaving the bridge site, determine if solvents for cleaning and coating equipment are reusable or considered waste. Make the determination and document in accordance with Solvent Reuse Determination Procedures and the applicable federal, state, and local laws and regulations. Provide a copy of the written determination documentation to the Engineer before removing solvents from the project. Dispose of non-reusable waste solvent associated with the project.

Manage, label, contain, store, and ship solvent determined reusable in accordance with the applicable federal, state, and local laws and regulations. Provide certification (shipping paper) for reusable solvent transported from the bridge site. Manage, label, contain, store, ship, and dispose of solvent characterized as waste in accordance with the following:

i. Part 111, Hazardous Waste Management, MCL 324.11101 et seq.
ii. Subtitle C of the *Federal Resource Conversation and Recovery Act of 1976*, as amended (RCRA);
iii. Part 121, Liquid Industrial By-Products, MCL 324.12101 et seq.; and
iv. The administrative rules or regulations promulgated pursuant to these acts, and other applicable federal, state, and local laws and regulations.

E. **Removal and Replacement of End Diaphragms.** Before beginning the removal and replacement of end diaphragms, divert traffic on the bridge from the affected bay until shoring placement is complete. Place shoring to support the concrete deck during diaphragm removal. Disconnect each end diaphragm from connecting plates or angles by removing existing bolts or rivets.

Clean and coat the diaphragm along with any portions of the structure that would be inaccessible with the diaphragm in place prior to re-erection of end diaphragms. For faying surfaces, apply the prime coat and allow to cure in accordance with the requirements of the zinc primer's Slip-Coefficient and Creep Resistance Test Certificate for slip critical connections at 75 °F or higher. Mask faying surfaces and the top of the diaphragm top flange. Apply the intermediate coat.

After the intermediate coat is dry to the touch, coat the top of the diaphragm top flange with epoxy grout. Immediately bolt the diaphragm in place in accordance with subsection 707.03.E.6.
Clean the galvanized nuts, bolts, and washers to SSPC-SP 1 condition and apply a tie coat. Apply the tie coat by a method and coating thickness recommended by the coating manufacturer. Coat bolts, nuts, and washers, and missed areas with an intermediate coat.

Apply the top coat to the area, including behind the reinstalled diaphragms.

F. **Cleaning, Coating and Installing New Hanger Assemblies.** Select a coating system from the Qualified Products List meeting the required cure time. Use the same coating system for the joint area as for the remainder of the bridge.

If the dry film exceeds the maximum required thickness, sand to below the maximum thickness and clean before applying subsequent coats. If the maximum time between coats is exceeded, blast clean and recoat newly coated surfaces at no additional cost to the Department.

Modify girder end cleaning and coating procedures as follows for areas within 3 feet of each side of the centerline of the pin holes.

1. Enclose joint areas in accordance with subsection 715.03.B except negative pressure in the containment is not required. Containment may be removed during coating and curing if the temperature is at least 50 °F.
2. Blast clean joint areas to a white metal finish, in accordance with SSPC-SP 5 *White Metal Blast Cleaning* (see SSPC-VIS 1 *Visual Standards*), with a surface profile of 1.0 mil to 2.8 mils.
3. Enclose and heat joint areas, as acceptable to the Engineer, to maintain steel and air temperatures at 50 °F or higher. If the ambient air temperature at least 50 °F during coating application and curing, enclosing the joint area is not required. If enclosure is required, apply three coats before removing the enclosure. Apply coating when the relative humidity is below 90 percent.
4. Spray on prime coat and cure at 50 °F or higher for at least 12 hours. Provide a DFT of 4.0 mils to 6.0 mils.
5. Mask pin holes before applying the intermediate coat. Spray on the epoxy intermediate coat and allow it to cure at 50 °F or higher for at least 12 hours. Provide a DFT of the intermediate coat between 3.5 mils and 6.0 mils.
6. After the intermediate coat cures for at least 1 hour and is dry to the touch, install the new pins and link plates. Continue curing the epoxy intermediate coat at 50 °F or higher for at least 12 hours.
7. Spray the urethane top coat over assembled joint areas when the temperature is at 40 °F or higher. Apply the final coat as soon as possible after the epoxy intermediate coat cures, but no later than 21 days. Coat the areas behind assembled link plates with urethane top coat to the extent possible. Provide complete coverage and a uniform appearance with the top coat application.
8. If cleaning and coating the remainder of the girder after the joint area, box in or cover the joint area including the new pins and link plates, before blast cleaning and prime coating girders. Remove the box or covering before top coating the girders.
9. If remainder of the girder is cleaned and coated before the joint area, prevent damage to the girder coating during the blast cleaning and coating of the 6-foot joint area. Protect painted girder as approved by the Engineer.

715.04. Measurement and Payment.

Pay Item	**Pay Unit**
Steel Structure, Cleaning, Type 4 (Structure Identification)	Lump Sum
Steel Structure, Cleaning, Partial, Type 4 (Structure Identification)	Lump Sum
Steel Structure, Coating Type 4 (Structure Identification)	Lump Sum

Steel Structure, Coating, Partial, Type 4 (Structure Identification).....Lump Sum
End Diaphragm, Rem and Replace .....Each
Protective Shield, Utility Pipe .....Foot

A. **Steel Structure, Cleaning.** The unit prices for **Steel Structure, Cleaning, Type 4** and **Steel Structure, Cleaning, Partial, Type 4** include the cost of protecting the work and environment during blast cleaning, removing loose concrete, providing barges or temporary platforms, enclosures, handling, storage, testing, transporting, and disposal of spent material, bag house dust, and shower water, regardless of hazardous or nonhazardous. The Department will not make additional compensation for suspension of work by the Engineer.

B. **Steel Structure, Coating.** The unit prices for **Steel Structure, Coating, Type 4** and **Steel Structure, Coating, Partial, Type 4** include the cost of coating faying surfaces.

The unit prices for coating pay items include the cost of management, characterization, and disposal of waste solvent.

C. **Stenciling.** The cost of stenciling is included in the unit price for related structure cleaning and coating pay items.

D. **End Diaphragm, Rem and Replace.** The unit price for **End Diaphragm, Rem and Replace** includes the cost of shoring the structure while the slab remains unsupported, providing galvanized high strength bolts, and providing and applying epoxy resin to the diaphragm flange.

The unit prices for **Steel Structure, Cleaning, Type 4** and **Steel Structure, Coating, Type 4**, or **Steel Structure, Cleaning, Partial, Type 4** and **Steel Structure, Coating, Partial, Type 4** include the cost of cleaning and coating diaphragms.

E. **Protective Shield, Utility Pipe.** If pipes or conduits are clustered in groups of at least two, the Engineer will measure the length of the cluster. The unit price for **Protective Shield, Utility Pipe** includes the cost of shielding the utility pipe or conduit during blast cleaning and painting operations, or if required, cleaning and coating existing utility conduits, including brackets and hangers.

Section 716. SHOP CLEANING AND COATING STRUCTURAL STEEL

716.01. Description. This work consists of shop cleaning and applying a complete coating system on new structural steel as a part of fabricating and providing structural steel; field cleaning and repairing surfaces damaged in shipping, handling, and erecting the structural steel; and repairing damaged galvanized surfaces.

Refer to SSPC *Painting Manual*, Volume 1 and Volume 2 for definitions of cleaning criteria and other coating terms.

If more than 500 square feet of steel surface is to be coated, the work must be performed by a fabricator with an AISC Sophisticated Paint Endorsement. SSPC QP 3, *Certification Standard for Shop Application of Complex Protective Systems* will also be accepted.

716.02. Materials. Provide materials in accordance with the following:

Sealant for Perimeter of Beam Plates 713
Bridge Coating System 915

Provide materials in accordance with subsection 715.02. Steel shot is allowed for shop cleaning of structural steel.

716.03. Construction.

A. **Cleaning Structural Steel.** Before cleaning, remove oil or grease deposits in accordance with SSPC-SP 1, *Solvent Cleaning*. Clean surfaces to SSPC-SP 10, *Near White Blast Cleaning*. Grind surface irregularities, including fins, tears, slivers, and burred or sharp edges on steel members in accordance with SSPC-SP 11, *Bare Metal Power Tool Cleaning*. The Engineer will inspect for steel cleanliness using the visual standard specified in SSPC-VIS 1, *Guide and Reference Photographs for Steel Surfaces Prepared by Dry Abrasive Blast Cleaning*, and SSPC-SP 10 for the initial rust condition.

Remove abrasives from steel surfaces with a commercial grade vacuum cleaner equipped with a brush-type cleaning tool, or by double blowing with partial vacuuming. If using the double blowing method, vacuum the top surfaces of structural steel, including flanges, longitudinal stiffeners, splice plates, and hangers after double blowing. For blowing the steel clean, use an air line with an in-line water trap that delivers compressed air free of oil and water as it leaves the air-line. Maintain steel dust free and prime within 8 hours of cleaning.

Before shop coating, mask areas requiring field welding, except top flange areas receiving welded shear developers. After applying the prime coat, but before applying the intermediate coat, mask areas where welding shear developers to the top flange.

B. **Coating Structural Steel.** Load material for shipment after the shop coating has cured and the Engineer has inspected the material. The Engineer will stamp the components "Recommended for Use" after loading is complete if they satisfy the contract.

1. **Applying the Coating.** Coat structural steel in accordance with subsection 715.03.D.1 and subsection 715.03.D.3, except, provide a primer dry film thickness (DFT) for the top flange between 4.0 mils and 8.0 mils.

2. **Coating Faying Surfaces and Connections.** Faying surfaces are all surfaces internal to a connection that bear on an adjacent surface including the contact surface of bolts, nuts, and washers. Before cleaning and coating, disassemble bolted connections. Blast clean components separately. Apply a prime coat and allow to cure before reassembly. Use the same primer for both connecting surfaces. Vacuum the connection again immediately before reassembly. If the Engineer determines the surface is not clean enough for bolting, scrub the surface with a commercial detergent and rinse with water before assembling the connection. Reassemble the connection by tightening the bolts using the turn-of-nut method in accordance with subsection 707.03.E.6.d.

   a. **Slip Critical Connections.** Apply the same primer to faying surfaces and filler plate surfaces. Apply prime coat to a minimum DFT of 1.0 mil and a maximum DFT determined by the slip coefficient test results in accordance with subsection 715.02. Apply a prime coat to the external surfaces of splice plates with a DFT from 4.0 mils to 10.0 mils. The primer must meet the requirements of Class B slip coefficient. Mask the faying surface during subsequent coat applications.

   b. **Other Connections.** Apply the same prime coat to faying surfaces, other than slip critical surfaces, in accordance with subsection 715.03.D.1. Mask the faying surface before subsequent shop coating operations. After assembly in the field, solvent-clean exposed primed splices and other bolted connection locations in accordance with SSPC-SP 1. Use the same intermediate and top coat materials as for the remainder of the structure. Apply an intermediate and top coat to exposed surfaces of the bolts, nuts, and washers in accordance with subsection 715.03.D.1.

   c. **Contact Surfaces without Primer.** If painting with an epoxy intermediate coat, edge seal unprimed contact surfaces. Use a sealant designated for sealing perimeter of beam repairs selected from the Qualified Products List.

3. **Stenciling.** Apply stencils in accordance with subsection 715.03.D.5. Designate the coating type as 4S.

4. **Galvanizing.** When required by the contract, or as a substitute for applying a zinc-rich primer, hot-dipped galvanizing of structural steel members in accordance with AASHTO M111M/M111 will be allowed, except for surfaces internal to slip critical connections and surfaces of filler plates. Apply a zinc-rich primer to coat surfaces internal to slip critical

connections and surfaces of filler plates at a minimum DFT of 1.0 mil and a maximum DFT as determined by the slip coefficient test results in accordance with subsection 715.02. Mask the faying surface before applying subsequent coats. Apply subsequent coats in accordance with subsection 715.03.D. Repair damaged galvanized surface in accordance with subsection 716.03.E.

Galvanize portions of bearings not welded to the structure, and other structural steel required to be galvanized, in accordance with AASHTO M111M/M111.

Remove weld spatter by grinding before galvanizing. In addition, remove mill scale and welding slag by abrasive blasting before galvanizing. Prepare steel components for galvanizing in accordance with SSPC-SP 8, *Pickling*.

Perform galvanizing using the "dry process". Do not quench the galvanized components after galvanizing. If the contract requires a top coat on galvanized components, do not apply a chromate surface passivation. Apply a galvanizing thickness of at least 3.9 mils, or 2.3 ounces per square foot.

Areas of field connections must have a uniform galvanized coating thickness, free of local excessive roughness that prevents splice plates, bearings, or other field connections from making full contact.

In the shop after galvanizing, use a hand wire brush to roughen faying surfaces other than slip critical connections. Do not use powered wire brushes. Field splice bolt holes must be free of zinc build up. Check each hole in the shop after galvanizing to verify the hole is able to receive a drift or barrel pin with a diameter of $\frac{1}{16}$ inch plus the diameter of the bolt.

After galvanizing, place structural steel in a second shop assembly in accordance with subsection 707.03.D.14 to check alignment of holes, sweep, and camber against the fabricator's original recorded lay down dimensions. The fabricator's personnel may perform this shop assembly at the galvanizer's facility if approved by the Engineer. The Engineer may waive the second shop assembly if the fabricator records individual beam or girder cambers and sweeps during the first shop assembly and the dimensions after galvanizing fall within the following tolerances:

a. Bearing points after galvanizing are ±⅛ inch from the first shop assembly;
b. Camber points after galvanizing are +¼ inch or −0 inch from the first shop assembly; and
c. Sweep points after galvanizing are ±⅜ inch from the first shop assembly.

If individual beams or girders exceed the listed tolerances, place the beam or girder with at least two adjacent beams or girders in the shop assembly to check against the recorded shop assembly records in accordance with subsection 707.03.D.7. The fabricator will record, and the Engineer will witness, the second shop assembly or individual member cambers.

For galvanized elements required to be painted, prepare the surface in accordance with ASTM D6386 prior to painting, except remove zinc high spots including, but not limited to, bumps, runs, drips, and dross inclusions on galvanized steel members by grinding or filing until they are level with the surrounding area. SSPC-SP 16, *Brush-off Blast Cleaning of Non-Ferrous Metals* must be used when sweep blasting for surface preparation prior to coating, except the minimum surface profile must to be 1.0 mil. After cleaning, inspect the surface for conformance with the required zinc thickness in accordance with galvanizing specifications.

Stencil in accordance with subsection 715.03.D.5 except designate the coating type as 4GS.

C. **Handling Coated Steel.** Use care when handling coated steel in the shop and during shipment, erection, and assembly. Do not move or handle coated steel until the coating cures. Protect the steel from binding chains with softeners approved by the Engineer. Use padded hooks and slings to hoist steel. Space diaphragms and similar pieces during shipment to prevent damage from rubbing. At the project site, store the steel components on pallets so they are not in contact with the ground or fall against or rest on each other. Provide shipping and project storage details to the Engineer at the pre-fabrication meeting and obtain Engineer's approval before shipping the steel.

D. **Shop and Field Repair.** Make shop and field repairs to the coating in accordance with the coating manufacturer's recommendations, or in accordance with this section, whichever is more stringent. Submit written procedures to the Engineer and obtain the Engineer's approval for shop and field repairs for approval before applying coating. For surfaces, inaccessible after erection, repair and recoat before erection. Prepare accessible steel for repairs after completion of erection work, including connections and straightening of bent steel.

1. **Cleaning.** Shop clean in accordance with subsection 716.03.A. Field clean in accordance with subsection 715.03.C.

2. **Coating.** Apply shop coats in accordance with subsection 716.03.B. Apply field coats in accordance with subsection 715.03.D, using the same coating material as applied in the shop.

E. **Repair of Damaged Galvanized Surfaces.** If damage occurs to the zinc coating during transporting, handling, or installing, repair the damage at no additional cost to the Department. Exposed underlying steel or coating thicknesses less than 50 percent of the specified thickness or thickness equivalent is considered damage.

Thickness equivalent: 1 ounce of zinc per square foot equals 1.7 mils.

For repair coating, apply a coating 1½ times the thickness or thickness equivalent specified for galvanizing on the item, but not less than 5 mils. Use zinc-based solder, zinc-rich primer, or zinc metallizing in accordance with ASTM A780/A780M. Obtain the Engineer's approval before using zinc metalizing.

Clean the metal and apply the coating in accordance with Annex A1, A2, or A3 of ASTM A780/A780M, except as modified in this subsection.

If using zinc-based solder for repair, use temperature sensitive crayons to verify the preheat temperature of the metal before depositing the zinc alloy.

If using zinc-rich primer for repair, clean the damaged surface to near-white metal before applying the primer. Apply the primer in accordance with the manufacturer's recommendations for temperature and dryness.

716.04. Measurement and Payment.

Pay Item	**Pay Unit**
Field Repr of Damaged Coating (Structure Identification)	Lump Sum

The Engineer will measure **Field Repr of Damaged Coating (Structure Identification)** as a unit for each structure. The unit price for **Field Repr of Damaged Coating (Structure Identification)** includes the costs of making field repairs to the previously applied coating system; prime coat surfaces and exposed surfaces of bolts, nuts, and washers; and repairing stenciling and the coating of galvanized components that are not shop coated.

The unit price for **Structural Steel, Furn and Fab**, of the type specified, includes the cost of applying and shop repairing the complete coating system, including stenciling and approved sealants.

Repair of damaged galvanized surfaces is included in the pay item for furnishing the galvanized component.

Section 717. DOWNSPOUTS AND DRAINS

717.01. Description. This work consists of providing and installing deck drains and downspouts, adjusting existing deck drains, extending existing downspouts, and protecting deck drain systems during construction.

717.02. Materials. Provide materials in accordance with the following:

Drain Castings 908
Miscellaneous Metals 908
Downspouts 909
Drain Extensions 909

717.03. Construction.

A. **New Construction.** Install new drain castings and downspouts at the locations and elevations shown on the plans.

For drain casting required to meet the American with Disabilities Act (ADA), fabricate grates that comply with 28 CFR 36 Subpart D and 36 CFR 1191 Appendix B and D. Unless otherwise specified in the contract, orient grates so the long dimension of the elongated openings are perpendicular to the dominant direction of travel and as approved by the Engineer.

B. **Adjusting Existing Deck Drains.** Adjust existing drain castings and downspouts to the new elevations shown on the plans.

C. **Downspout Replacement.** Fabricate replacement downspouts with an inside diameter sized to fit the outside of the existing drain casting. Provide a downspout length that extends from the drain casting to 6 inches below the beams. Remove the existing downspout. Attach the replacement downspout to the existing drain casting with four equally spaced, galvanized, ½ inch diameter steel cap screws, drilled and tapped into the casting. If the depth of the adjacent beams exceeds 42 inches, install a support bracket.

D. **Deck Drain Extension.** Fabricate and install deck drain extensions. Center extensions beneath the existing drain opening and fasten directly to the deck.

E. **Protecting Deck Drainage Systems.** Protect existing deck drains and downspouts during construction. Prevent debris from clogging the deck drains and downspouts. Obtain the Engineer's approval for the protection method.

Before beginning work on existing bridges, conduct an inspection with the Engineer to determine the condition of deck drains and downspouts. At the completion of the project, clean the deck drains and downspouts to provide free flowing deck drains and downspouts clear of debris at no additional cost to the Department.

717.04. Measurement and Payment.

Pay Item	Pay Unit
Drain Casting, Type __	Each
Drain Casting, Type __, ADA	Each
Drain Casting Assembly, Type __	Each
Drain Casting Assembly, Type __, ADA	Each
Deck Drain, Adj	Each
Downspout Replacement	Each
Deck Drain, Extension	Each

A. **Drain Casting, Type __.** The unit price for **Drain Casting, Type __** includes the cost of providing and installing the drain casting.

Drain Casting, Type __, ADA. The unit price for **Drain Casting, Type __, ADA** includes the cost of providing and installing the drain casting with an ADA compliant grate.

B. **Drain Casting Assembly.** The unit price for **Drain Casting Assembly, Type __** includes the cost of providing and installing the drain casting, downspout and, if necessary, the lower bracket to the drain casting.

Drain Casting Assembly, Type __, ADA. The unit price for **Drain Casting Assembly, Type __** includes the cost of providing and installing the drain casting, downspout and, if necessary, the lower bracket to the drain casting with an ADA compliant grate.

C. **Deck Drain, Adjust.** The unit price for **Deck Drain, Adj** includes the cost of adjusting the drain casting and downspout.

D. **Downspout Replacement.** The unit price for **Downspout Replacement** includes the costs of the following:

1. Taking field measurements to determine downspout size;
2. Providing hardware to fasten the downspout to the drain casting; and
3. If the depth of the adjacent beams is greater than 42 inches, providing and installing the lower bracket.

E. **Deck Drain, Extension**. The unit price for **Deck Drain, Extension** includes the cost of providing and installing the deck drain extension.

F. **Protecting and Cleaning Deck Drainage Systems.** The cost of protecting and cleaning deck drainage systems is included in the unit prices of other relevant pay items.

Section 718. DRILLED SHAFTS

718.01. Description. This work consists of providing and constructing drilled shaft foundations.

718.02. Materials. Provide materials in accordance with the following:

Steel Reinforcement..... 905
Casing..... 919
Concrete, Grade 3500..... 1004

Provide steel reinforcement meeting the yield strength shown on the plans. Provide Concrete, Grade 3500 for Drilled Shafts. Provide slump for wet and dry placed drilled shafts in accordance with Table 1004-1.

Provide concrete with natural aggregate with a maximum absorption of 2.50 percent in accordance with ASTM C127. Do not use slag aggregate.

718.03. Construction. Review available soil boring logs from subsurface investigations. If, during construction, actual subsurface conditions differ substantially from those reported on the boring logs, notify the Engineer in writing within 48 hours of identifying the discrepancy.

The complete geotechnical report, outlining the subsurface exploration conducted during the design phase, is available for review before bidding.

If desired, perform additional soil test borings and other exploratory procedures at no additional cost to the Department.

A. **Drilled Shaft Installation Plan.** Submit an installation plan to the Engineer for review and approval at least 21 days before beginning drilled shaft installation. The installation plan must include the following:

1. Proposed equipment, including cranes, drills, augers, core barrels, bailing buckets, final cleaning equipment, slurry pumps, tremie tubes or concrete pumps, and casings;
2. The construction sequence;
3. Shaft excavation methods, including proposed excavation methods through supporting and caving soil layers;
4. Methods to mix, circulate, and de-sand slurry;
5. Methods to clean shaft excavation;
6. Reinforcement placement, including support and centering methods;
7. Concrete placement, including free fall, tremie tube, or concrete pumping procedures;
8. Methods to prevent drilled shaft excavation spoils and slurry from entering waterways, wetlands, floodplains and sewers;
9. Other information shown on the plans or requested by the Engineer.

The Engineer will evaluate the drilled shaft installation plan and notify the Contractor, within 7 days of receiving the plan, of additional information required and changes to meet contract requirements.

The Engineer will reject unacceptable parts of the plan. Resubmit changes to the Engineer for reevaluation. Drilled shaft installation plan procedures are subject to trials in the field.

The Engineer's approval does not relieve the Contractor of completing the work and is not cause for extra compensation if construction methods or equipment do not provide a satisfactorily drilled shaft.

The Engineer's review and approval of the Contractors drilled shaft installation plan will be made in accordance with subsection 104.02.

B. **General Methods and Equipment.** Excavate for the drilled shaft, to the dimensions and elevations shown on the plans, through encountered materials. Use methods and equipment for the intended purpose and materials encountered. Control operations to prevent damage to existing structures and utilities. Use preventative measures including the selection of construction methods and procedures that prevent caving of the shaft excavation, and monitoring and controlling the excavation depth. Repair damage to existing structures or utilities, to the satisfaction of the Engineer, including engineering analysis and redesign, without extending the project completion dates, and at no additional cost to the Department. Obtain the Engineer's approval for the selected general method.

1. **Dry Construction Method.** Use the dry construction method at sites where the groundwater table and site conditions allow shaft construction in dry excavation, and where the sides and bottom of the shaft remain stable without caving, sloughing, squeezing or swelling. Make the shaft available to the Engineer to visually inspect before concrete placement.

   Excavate the drilled shaft hole, remove accumulated water and loose material, and place the shaft concrete in a dry excavation. Do not use the dry construction method if the flow of water into the excavation causes the height of water in the excavation to increase at a rate exceeding 12 inches per hour. Do not place the initial concrete if the depth of water in the bottom of the excavation exceeds 3 inches.

2. **Wet Construction Method.** Use the wet construction method at sites where dry excavation cannot be maintained during shaft concrete placement. Use water or slurry to contain seepage and groundwater movement and place concrete using a tremie tube or concrete pump. Maintain the stability of the excavation perimeter while advancing the excavation to the final depth, placing the steel reinforcement cage, and placing the shaft concrete. De-sand and clean slurry, if used.

   Maintain a water or slurry fluid elevation higher than the static water table during drilling operations and inside drilled shafts not connected into the bedrock.

Provide temporary surface casings for shaft alignment and position and to prevent sloughing of the top of the shaft excavation unless otherwise approved by the Engineer. Extend surface casings to an elevation in the shaft excavation that prevents sloughing of the surrounding soil.

3. **Dry Temporary Casing Method.** Use the dry temporary casing method where caving soils occur but casing can maintain a dry and stable excavation. Install a temporary casing in dry soil conditions through the caving soils to the bottom of shaft. Install a temporary casing to an impermeable stratum if ground water is present. Remove excess water and soil from the casing.

   Advance the casing and excavation simultaneously. Do not drill outside or below the casing through caving soil layers. The bottom of the excavation must remain dry and stable until placement of the steel reinforcement and concrete. Withdraw the casing while the concrete is workable. Increase the level of fresh concrete in the casing before withdrawing casing to cause the upward displacement of fluid behind the casing.

4. **Wet Temporary Casing Method.** Use the wet temporary casing method where caving soils occur and a dry excavation cannot be maintained, the soil profile is permeable, and the groundwater elevation is higher than the bottom of the shaft elevation. Install the casing through caving soils to the required bottom of shaft elevation, and drill the excavation to the required dimensions. Advance the casing and excavation simultaneously. Do not drill outside or below the casing through caving soil layers.

   Maintain a positive pressure differential between the fluid level in the excavation and the groundwater elevation during drilling, excavation, and clean out. Place steel reinforcement and place concrete using a pump or tremie tube to the bottom of the excavation. Displace water inside the casing with concrete. Do not pump water out of the casing.

   The wet temporary casing method may include drilling slurry. Perform final cleaning of the entire bottom of excavation with a clean out bucket. Increase the level of fresh concrete in the casing before and during casing removal to cause the upward displacement of fluid behind the casing, without contaminating or displacing the shaft concrete.

5. **Construction Method Log.** Submit a construction method log to the Engineer each day during drilled shaft excavation and construction. Include the following information in the log for each drilled shaft:

   a. Date (start date and completion date);
   b. Drilled shaft identification number;
   c. Location;
   d. Actual top and bottom elevation of drilled shaft;
   e. Shaft diameter;
   f. Centerline location measured at the top of shaft;

g. Variation of centerline from plumb;
h. Top and bottom elevation and diameter of any casing;
i. Description of each soil and rock material encountered during excavating and the top and bottom depths or elevations;
j. Depth drilled into bearing stratum;
k. Top and bottom elevations of obstructions encountered;
l. Amount of obstruction time, if any;
m. Depth or elevation of encountered seepage or groundwater;
n. Record the actual volume of concrete placed with the theoretically calculated concrete volume to detect any large voids or intrusions of extraneous material; and
o. Remarks.

C. **Construction Tolerances.** Drilled shafts constructed outside of the following tolerances will be rejected. Correct unacceptable shaft excavations, reinforcement cages and completed shafts to the Engineer's satisfaction. Complete corrections for out-of-tolerance drilled shafts, including engineering analysis and redesign, at no additional cost to the Department, and with no extension to the project completion dates.

1. **Horizontal Alignment.** The drilled shaft top must be within 3 inches of the position shown on the plans measured at the centerline of the shaft.

2. **Plumb.** The out of plumb at the drilled shaft actual bottom elevations must be no more than 1 percent of the drilled shaft length, as measured horizontally from the actual center of the shaft at the shaft design top elevation.

3. **Reinforcing Steel.** Place the steel reinforcement cage to within 1 inch above and 3 inches below its planned location and secure in position.

4. **Top of Shaft Elevation.** Finish the top of the shaft to within 1 inch above and 3 inches below its planned elevation.

D. **Casings.** Case shaft excavations, as shown on the plans. Provide smooth, watertight, metal casings capable of withstanding handling, installation, and the pressure of concrete and the surrounding earth materials. Provide a casing with an inside diameter at least the size of the shaft. Install casings such that intimate contact with the surrounding earth or rock is maintained. Cut off permanent and temporary casings to be left in place at the elevation shown on the plans. Remove temporary casings.

Attach fixtures to the top of the casings, to aid in removing temporary casings. Remove temporary casings while the concrete remains workable. Complete concrete placement in the shaft before removing temporary casing. Extract casings slowly, with the pull in-line with the shaft axis. Do not apply forces that induce moments in the shaft, detrimental to the concrete.

If the top-of-shaft elevation is below ground during concrete placement, use a temporary casing to prevent material from caving into fresh concrete.

Maintain a head of concrete above the bottom of the casing to overcome hydrostatic pressure for cased shafts. Monitor the concrete level in the casing during extraction. Stop the extraction and add concrete to maintain a full shaft upon casing removal.

E. **Slurry.** Use a polymer type slurry, if using slurry in the drilling process, with viscosity and gel characteristics capable of transporting excavated material to a screening system or settling tank. The percentage and specific gravity of the material making the suspension must maintain the stability of the excavation and allow concrete placement. Maintain the height of the slurry capable of preventing the excavation sides from caving and the excavation bottom from heaving.

Premix the slurry with clean, fresh water, and allow time for hydration before introducing into the shaft excavation. Agitate, circulate, and adjust the properties of the slurry to prevent slurry from "setting up" in the shaft excavation.

Perform control tests using an apparatus on the slurry to determine density, viscosity, and pH in accordance with American Petroleum Institute (API) standards. The density, viscosity, and pH values must meet the ranges specified in Table 718-1.

Table 718-1
Polymer Slurry Specifications Range of Values at 68 °F

Property	Test Method	At Time of Slurry Introduction (Emulsified Polymer)	At Time of Concreting in Excavation (Emulsified Polymer)
Density, lb/ft ^{3}	Mud Weight (Density) API 13B-1, Section 1	<63	<63
Viscosity, s/qt	Marsh Funnel Cone and Cup API 13B-1, Section 2.2	33 – 43	33 – 43
pH	pH Paper or meter	8 – 11	8 – 11
Maximum Contact Time (hr)	—	72	72
Sand Content	API 13B-1, Section 5	<1%	<1%

If de-sanding is required, do not allow the sand content to exceed 1 percent by volume in the shaft excavation, as determined by the American Petroleum Institute sand content test.

Determine density, viscosity, and pH values before and during the shaft excavation to establish a consistent working pattern.

Use a Department-approved slurry-sampling tool to take slurry samples from the bottom, and at mid-height, of the shaft before placing shaft concrete. Remove heavily contaminated slurry accumulated at the bottom of the shaft.

Control and dispose of slurry exiting the excavation. Contain slurry in the excavation and remove as it becomes displaced by concrete placement. Do not allow slurry to enter waterways, wetlands, floodplains or sewers.

F. **Excavation.** Maintain the stability of the excavation sidewalls and extend the shaft excavation to a stratum accepted by the Engineer. Extend drilled shaft tip elevations if the Engineer determines the bearing stratum, encountered during excavation, is unsuitable or differs from the bearing stratum anticipated in the design of the drilled shaft.

Provide the Engineer access to auger cuttings of the bearing material for additional analysis. Fill shaft over-excavation with concrete at no additional cost to the Department, unless Engineer determines the bearing stratum encountered during excavation is unsuitable or differs from the bearing stratum anticipated in the design of the drilled shaft. Fill unauthorized shaft excavations extending below the required depths or elevations, with concrete, at no additional cost to the Department.

Dispose of excavated material in accordance with subsection 205.03.P. Keep excavated materials away from open shaft excavations. Direct surface water away from shaft excavations. Do not allow excavated material to enter waterways, wetlands, floodplains or sewers.

1. **Inspection.** Provide equipment for checking the dimensions and alignment of each drilled shaft. Use the following methods to determine the dimensions and alignment with the Engineer's direction:

   a. Check drilled shaft dimensions and alignment with reference stakes and plumb bob;
   b. Check the dimensions and alignment of casing inserted in the excavation;
   c. Insert a casing in shaft excavations temporarily; or
   d. Insert a rigid rod assembly with several 90 degree offsets equal to the shaft diameter, into the shaft excavation.

   After shaft excavation, provide access, lighting capable of illuminating the entire shaft, and time for the Engineer to inspect the shaft.

   Reference the depth of the shaft during drilling to marks on the Kelly Bar. Measure final drilled shaft depths with a weighted tape after final cleaning.

   Clean each shaft so at least 50 percent of the base contains less than ½ inch of sediment. Do not leave sediment and/or debris on the base measuring more than 1½ inches in thickness. The Engineer will visually inspect dry excavations and inspect wet excavation by other methods to determine cleanliness.

   Inspect the drilled shaft excavation immediately before placing the concrete.

   Inspect wet method construction by probing and measuring.

2. **Obstructions.** Remove surface and subsurface obstructions within the length of drilled shaft excavations. Obstructions may include, but are not limited to, old concrete foundations, abandoned utilities, or boulders. Use special procedures or tools, or both, if unable to advance excavations using augers fitted with soil or rock teeth, drilling buckets, or under-reaming tools. Special procedures and tools include:

   a. Chisels;
   b. Boulder breakers;
   c. Core barrels;
   d. Air tools;
   e. Hand excavation;
   f. Temporary casing; and
   g. Enlarging the hole diameter.

G. **Placing Steel Reinforcement.** Place steel reinforcement in accordance with subsection 706.03.E.

Assemble the reinforcing steel cage, and install it immediately after excavation inspection and immediately before concrete placement. If concrete is not placed immediately after steel reinforcement cage installation, the Engineer may direct removal of the cage before placing the concrete to verify the integrity of the excavated area and to determine if removal of loose or soft material from the bottom of the excavation is necessary.

If overhead obstacles prevent placing the cage as a single unit, connect individual segments with couplers or by lapping steel, as approved by the Engineer. Provide a fully assembled steel reinforcement cage for inspection a minimum of 2 days before the start of drilled shaft construction.

Tie and support the steel reinforcement to meet the required tolerances. Tie spacers at quarter points around the cage perimeter and space at intervals no greater than 5 feet along the length of the cage. If the size of the longitudinal reinforcing steel equals or exceeds a diameter of 1 inch, the distance between spacing devices may be increased to 10 feet.

Use non-corrosive spacers to maintain a minimum annular space of 3 inches between the outside of the cage and the side of the excavation or casing. Use at least one spacer per 30 inches of the outside circumference of the cage. Place at least three spacers at each level of the cage. Round plastic spacers may be used. Do not use concrete blocks, wood blocks, or metal chairs on the sides of the cage. Concrete blocks may be used on the bottom of the shaft to maintain cover to ends of the cage.

Secure the cage to control vertical displacement during concrete placement and casing extraction. Use concentric support to prevent the steel reinforcement cage from racking and distorting.

Check the elevation of the top of the steel reinforcement cage before and after concrete placement or after temporary casing extraction.

H. **Concrete Placement.** Do not place concrete in a drilled shaft excavation before the Engineer accepts the drilled shaft excavation. Inspect the drilled shaft excavation immediately before placing the concrete. Provide lighting capable of illuminating the reinforcing steel cage, and the sides and the bottom of the drilled shaft excavation for inspection.

If the top-of-shaft elevation is below ground during concrete placement, use a casing to prevent material from caving into fresh concrete.

Place concrete as soon as possible after completing excavation and placing reinforcing steel.

For dry methods of construction, remove loose material and accumulated water from the bottom of the excavation before placing concrete. Place concrete using underwater placement methods if unable to remove water.

For wet methods of construction, place concrete in one continuous operation from bottom to top of the shaft. After the concrete reaches the top of the drilled shaft, continue pumping and remove contaminated concrete until the Engineer determines acceptable quality concrete appears at the top of the shaft. Continue placing concrete through the tremie pipe until contaminated concrete flows over the top of the shaft.

Do not vibrate concrete with a vibrator, except for the top 5 feet for concrete placed with dry methods. Remove the casing in a manner that accounts for the force of downward flowing concrete and does not deform the reinforcing steel cage.

Place concrete by free fall method, tremie tube, or pumping. Use a sump, or other Department-approved methods to channel displaced fluid and concrete away from the shaft excavation. Recover and dispose of slurry as approved by the Engineer. Do not discharge displaced fluids into waterways, wetlands, floodplains or sewers. For concrete pours over water, provide a collar or other means to capture slurry and the top portion of the concrete overflowed from the shaft.

1. **Free Fall Concrete Placement.** The free-fall method may be used in a dry shaft if concrete falls to the final position without striking the sides of the excavation, the reinforcing steel cage, or other obstructions. Use a centering drop chute, at least 3 feet long if using the free-fall method.

   If concrete placement causes the shaft excavation to cave or slough, or if concrete strikes the rebar cage or sidewall, reduce the height of free-fall, the rate of concrete flowing into the excavation, or both. Do not use a shovel or other means to deflect the concrete discharged directly from the truck.

   Do not allow concrete to free-fall more than 80 feet.

If the Engineer determines dewatering is impractical, or concrete placement by free-fall method cannot be accomplished, place concrete using a tremie tube or a concrete pump.

2. **Tremie Tubes.** A gravity tremie may be used instead of a concrete pump for concrete placement in wet or dry excavations.

   Use tremie tubes with a length, weight, and diameter necessary to discharge concrete at the base of the shaft elevation. Use tremie tubes with an inside diameter of at least 10 inches.

   Use tremie tubes with smooth and clean inside and outside surfaces to allow flow of concrete and unimpeded tremie tube withdrawal during concrete placement operations. Use tremie tubes with thick walls to prevent crimping or sharp bends that restrict concrete placement.

   Use watertight tremie tubes for concrete placement. Do not begin underwater concrete placement until positioning the tremie tube to the shaft bottom elevation. Use valves, bottom plates, or plugs to begin concrete discharge within one tremie tube diameter of the base. Remove plugs from the excavation or use plugs of an Engineer-approved material that does not cause defects in the shaft if not removed. Fabricate the discharge end of the tremie tube to allow the free radial flow of concrete during placement operations. Immerse the tremie tube discharge end at least 10 feet in concrete after beginning the concrete flow.

   Keep the shaft full of concrete and the tremie tube submerged in placed concrete. Raise the tremie tube as necessary to maintain the free flow of concrete and casing stability but maintain at least 10 feet of tremie embedment in concrete.

   If withdrawal of the submerged end of the tremie tube interrupts concrete placement, remove the tube, reseal it at the bottom, reinsert the tube into the placed concrete by at least 10 feet, and recharge before continuing the concrete placement.

   For uncased wet excavations, maintain the drilled shaft excavation full of slurry or water so water does not flow into the shaft excavation.

   For cased shafts, maintain a head of concrete above the bottom of the casing to overcome hydrostatic pressure. Extract casing at a slow, uniform rate with the pull in line with the shaft axis. Monitor the concrete level in the casing during extraction. Stop the extraction and add concrete to the casing to ensure a completely full excavation upon casing removal.

   The elapsed time from mixing the first concrete placed in the cased shaft to completion of casing extraction must not exceed the time concrete maintains a slump of over 4 inches. If the elapsed time is exceeded, modify the concrete mix, the construction procedures, or both for subsequent shafts.

3. **Pumped Concrete.** Pump concrete into wet or dry excavations using a pipe with a diameter of at least 4 inches and constructed with watertight joints. Arrange the concrete pump equipment so vibrations do not damage fresh concrete. Arrange pipes carrying concrete from the pump to the shaft with minimal bends. Anchor pipes, conveying concrete to the bottom of the drilled shaft excavation, to the casing or other stationary objects to prevent the pipe from undulating during concrete placement. Do not begin concrete placement until the pipe orifice is positioned at the shaft bottom elevation.

   Operate the pump to produce a continuous stream of concrete without air pockets. To prevent contamination of concrete placed initially at the bottom of the shaft excavation, seal the pipe orifice with a diaphragm or a plug that gets flushed out when the hydrostatic pressure from the column of concrete exceeds that of the water in the shaft excavation.

   Control the initial rate of concrete placement to prevent lift or displacement of the steel reinforcement cage. Use a watertight conveying system, and maintain the outlet end at least 10 feet below the top of freshly placed concrete. When concrete reaches the top of the drilled shaft column, remove laitance.

   If withdrawal of the submerged end of the pipe interrupts concrete placement, remove the pipe, reseal it at the bottom, reinsert it into the placed concrete by at least 10 feet, and recharge before continuing the concrete placement.

   For uncased wet excavations, maintain the drilled shaft excavation full of slurry or water so water does not flow into the shaft excavation.

   For cased excavations, maintain a head of concrete above the bottom of the casing to overcome hydrostatic pressure. Extract casing at a slow, uniform rate with the pull in line with the shaft axis. Monitor the concrete level in the casing during extraction. Stop extraction and add concrete to the casing as necessary to ensure a completely full excavation upon casing removal.

   The elapsed time from mixing the first concrete placed in the cased shaft excavation to completion of casing extraction must not exceed the time concrete maintains a slump of over 5 inches. If the elapsed time is exceeded, modify the concrete mix, the construction procedures, or both for subsequent shafts.

718.04. Measurement and Payment.

Pay Item	**Pay Unit**
Drilled Shaft, __ inch	Foot
Drilled Shaft Equipment, Furn (Structure Identification)	Lump Sum
Temp Casing-Left in Place	Foot
Permanent Casing	Foot
Obstruction Rem	Dollar

A. **Drilled Shafts.** The unit price for **Drilled Shaft, __ inch** includes the cost of the following:

1. Drilled shaft excavation;
2. Temporary casings;
3. Slurry;
4. Shaft concrete;
5. Disposal of excavated material and slurry; and
6. Preventative measures for maintaining surface water or drains free of cuttings or slurry.

The Engineer will measure and the Department will pay for reinforcing steel as specified in subsection 706.04.

B. **Casings.**

1. **Temporary Casing-Left in Place.** The unit price for **Temporary Casing-Left in Place** includes the cost of placing temporary casings left in place, as shown on the plans and cutting the casings to the elevation shown on the plans.

2. **Permanent Casing.** The unit price for **Permanent Casing** includes the cost of placing permanent casings as shown on the plans.

C. **Drilled Shaft Equipment.** The unit price for **Drilled Shaft Equipment, Furn**, includes the cost of providing and removing equipment for constructing the drilled shaft and providing and removing equipment for soil and rock excavation.

D. **Obstruction Removal.** The Department will pay for removing obstructions as **Obstruction Rem** if the Contractor uses the special procedures and tools specified in subsection 718.03.F.2.

Notify the Engineer immediately when an impenetrable obstruction requiring the use of special procedures and tools is encountered. The Engineer will designate obstructions for the Contractor's removal. The Department will establish a budget amount to pay for removing obstructions. If the Contractor and Engineer do not agree on a unit or lump sum price, the Engineer may order the work performed on a force account basis in accordance with subsection 109.05.D.

DIVISION 8 – INCIDENTAL CONSTRUCTION

Section	Title	Page No.
801	Concrete Driveways	XX
802	Concrete Curb, Gutter, and Dividers	XX
803	Concrete Sidewalk, Curb Ramps, and Steps	XX
804	Concrete Barriers, Glare Screens, and Foundations for Light Standards and Sign Supports	XX
805	Hot Mix Asphalt Curb	XX
806	Shared Use Paths	XX
807	Guardrail, Guardrail Terminals, and Miscellaneous Posts	XX
808	Fencing	XX
809	Field Office	XX
810	Permanent Traffic Signs and Supports	XX
811	Permanent Pavement Markings	XX
812	Temporary Traffic Control for Construction Zone Operations	XX
813	Slope Protection	XX
814	Paved Ditches	XX
815	Landscaping	XX
816	Turf Establishment	XX
817	Reserved	XX
818	Electrical	XX
819	Lighting	XX
820	Traffic Signals	XX
821	Preservation of Boundary Monuments	XX
822	Shoulder and Centerline Pavement Corrugations	XX
823	Water Mains	XX
824	Construction Surveying and Staking	XX
825	Sanitary Sewer Systems	XX

DRAFT – July 2020

Section 801. CONCRETE DRIVEWAYS

801.01. Description. This work consists of constructing reinforced, or non-reinforced concrete driveways as required by the contract.

801.02. Materials. Provide materials in accordance with the following:

Curing Compound 903
Steel Reinforcement 905
Joint Materials 914
Concrete, Grade 3500 1004

801.03. Construction. Construct driveways in accordance with subsection 803.03 and Standard Plan R-29 series.

801.04. Measurement and Payment.

Pay Item	Pay Unit
Driveway, Reinf Conc, __ inch	Square Yard
Driveway, Nonreinf Conc, __ inch	Square Yard

A. **Acceptance.** Conduct concrete quality control as specified in section 1002. The Engineer will conduct quality assurance as specified in section 1003. The Department will apply adjustments to this work based on the quality assurance results.

B. **Driveway, Reinf Conc and Driveway, Nonreinf Conc.** The Engineer will measure **Driveway, Reinf Conc, __ inch** and **Driveway, Nonreinf Conc, __ inch** by the width and length placed, for the specified thickness required on the plans.

Section 802. CONCRETE CURB, GUTTER, AND DIVIDERS

802.01. Description. This work consists of constructing the following items on the prepared base, with or without reinforcement, as required by the contract:

A. Concrete curb, combination curb and gutter, curb nose;
B. Valley gutter, and shoulder gutter;
C. Down spout headers, and spillways; and
D. Dividers.

802.02. Materials. Provide materials in accordance with the following:

Curing Compound 903
Asphaltic Materials 904
Steel Reinforcement 905
Geotextile Liner 910
Lane Ties 914
Joint Fillers 914
Concrete, Grade 3500 1004
Mortar, Type R-2 1005

802.03. Construction.

A. **Preparation of Base.** Prepare the base in accordance with subsection 602.03.B. Construct a uniform base. Compact the base material to 95 percent of the maximum unit weight. Prepare the base and geotextile liner for concrete spillways in accordance with subsection 814.03.A.

B. **Placing Forms.** Place fixed forms in accordance with subsection 602.03.C. Use face forms, if necessary, to construct straight curbs.

If using slip forming methods, match the dimensions of the form to the dimensions of the curb shown on the plans.

C. **Placing Steel Reinforcement.** Place steel reinforcement and lane ties in the correct position during concrete placement, as required.

Splice steel reinforcement bars by lapping them at least 10 inches. Tie bar laps with wire ties within 2 inches of each end of the lap.

D. **Placing Concrete.** Obtain the Engineer's approval of the base before placing concrete. Wet the base before placing concrete.

For concrete curbing constructed as an integral part of the concrete pavements, except at night headers, place concrete curbing within 30 minutes of placing the concrete for the pavement. At night headers, use ties and methods approved by the Engineer.

Construct transitions between concrete valley gutter and concrete curb and gutter in accordance with section 602.

Place concrete to the required depth and spade or vibrate to ensure consolidation.

Apply membrane curing compound as soon as concrete has been placed and for areas requiring repairs after the repairs have been made.

Repair honeycombed areas or voids with Type R 2 mortar.

E. **Joints.** Construct joints perpendicular to the surfaces of the curb, gutter or dividers, in accordance with to Standard Plan R-30 or R-33 series. Seal joints in accordance with subsection 602.03.S.

1. **Contraction Joints and Plane-of-Weakness Joints.** Construct joints, in accordance with plans, to ensure a plane-of-weakness at least ¼ the depth of the section.

2. **Expansion Joints.** Place expansion joint filler to the full depth of the joint. Recess the top of the joint filler ¼ inch to ½ inch below the finished surface of the structure.

F. **Finishing.** Round the exposed edges to a ¼ inch radius, including transverse joints. Shape the face of the curb to produce the radii shown on the plans. Fill low spots with the same concrete mixture used in the work.

Finish exposed surfaces smooth and even, and lightly brush using a broom or brush. Finish the gutter and top of curb to within $\frac{3}{16}$ inch of the plan dimensions when checked with a 10 foot straightedge. Finish other exposed surfaces to within ⅜ inch of the plan dimensions.

Do not add water to the concrete surface to aid finishing.

G. **Stenciling.** Stencil survey station numbers, in accordance with subsection 602.03.L, into the exposed surface of continuous runs of concrete curb, gutter, curb and gutter, and driveway opening, or shoulder that directly adjoins the traveled way. Stenciling curb and gutter is not required if concrete barrier is present and is stenciled in accordance with subsection 602.03.L.

Place stencil numbers as follows:

1. To be read from the traveled way;
2. On one side of one-way roadways (preferably the right side);
3. On both sides of the traveled way of two-way roadways; and

4. Midway up on the face of a curb or 2 inches from the back of a gutter or driveway opening.

Do not stamp, stencil, or in any way mark concrete with a company name, logo, or other such information.

H. **Curing.** Cure concrete curb, gutter, and dividers in accordance with subsection 602.03.M.

I. **Weather and Temperature Limitations.** Protect concrete curb, gutter, and dividers in accordance with subsection 602.03.T.

J. **Backfilling.** Place and compact backfill after the concrete gains the needed strength to support placing and compacting. Grade the remaining excavated areas.

802.04. Measurement and Payment.

Pay Item	**Pay Unit**
Curb, Conc, Det __	Foot
Curb and Gutter, Conc, Det __	Foot
Valley Gutter, Conc	Foot
Curb and Gutter, Bridge Approach, Det__	Foot
Shld Gutter, Conc, Det __	Each
Curb Nose	Each
Downspout Header, Conc	Each
Driveway Opening, Conc, Det M	Foot
Spillway, Conc	Foot
Divider, Conc, Type __	Square Foot

A. **Concrete Acceptance.** Conduct concrete quality control as specified in section 1002. The Engineer will conduct quality assurance as specified in section 1003. The Department will apply adjustments to this work based on the quality assurance results.

B. **Curb, Concrete; Curb and Gutter, Concrete; Valley Gutter, Concrete; and Curb and Gutter, Bridge Approach, Det__.** The Engineer will measure **Curb and Gutter, Conc, Det __, Valley Gutter, Conc**, and **Curb and Gutter, Bridge Approach, Det__** in place along the joint of the curbing with the pavement. The Engineer will not make deductions in the pay item measured length for catch basins, inlet castings, or Detail L driveway openings. The Engineer will divide transition areas between **Valley Gutter, Conc** and **Curb and Gutter, Conc** in half and will measure each half in the units of the adjacent item.

C. **Integral Curb and Pavement Construction.** If the Contractor chooses to construct curb as an integral part of the pavement, the Engineer will measure the curb separately. The Department will not consider payment for extras or increases in pay quantities due to the Contractor's choice to cast curbing integral with the pavement.

D. **Shoulder Gutter, Concrete.** The unit price for **Shld Gutter, Conc, Det __** includes the cost of providing and placing a geotextile liner. The plans will show the pay limits for **Shld Gutter, Conc, Det __.**

E. **Driveway Opening, Conc, Det M.** The Engineer will measure **Driveway Opening, Conc, Det M** from springline to springline.

F. **Spillway, Concrete.** The unit price for **Spillway, Conc** includes the cost of providing and placing a geotextile liner.

G. **Divider, Concrete, Type __.** The unit prices for concrete divider include the cost of steel reinforcement, if required.

H. **Excavation and Backfill.** Unless the Contract documents include separate pay items for excavation and backfill, the unit price for other items of work will include the cost of excavation and backfilling.

Section 803. CONCRETE SIDEWALK, CURB RAMPS, AND STEPS

803.01. Description. The work consists of constructing concrete sidewalks, curb ramps, and steps.

803.02. Materials. Provide materials in accordance with the following:

Sound Earth 205
Granular Material Class II 902
Curing Compound 903
Steel Reinforcement 905
Pipe Railing 908
Joint Fillers 914
Concrete, Grade 3000, 3500 1004
Grout 1005

A. **Steps.** Use Grade 3500 for concrete for steps. Precast steps will be allowed.

B. **Detectable Warning Surfaces.** Provide pre-fabricated detectable warning surfaces selected from the Qualified Products List that contrast visually with adjacent walking surfaces, either light-on-dark or dark-on-light. Base the selection on whether the detectable warning surface will be installed on existing concrete or on newly cast concrete. Ensure surface applied products include mechanical anchors.

803.03. Construction.

A. **Preparation of Base.** Excavate to the required depth and to a width that will allow forming. Remove unsuitable material below the required depth and replace with sound earth. Shape base to conform to the section shown on the plans and compact to 95%.

B. **Forms.** Use either fixed forms or slip forms. Provide straight, full depth, un-warped forms that will resist springing during concrete placement. Firmly stake fixed forms.

C. **Placing and Finishing Concrete.** Wet the base before placing concrete. Do not place concrete on a frozen base, or base that is unstable from excessive moisture. Place the concrete and consolidate before finishing. Place and finish concrete in a continuous operation.

If replacing gutters in addition to curb ramps, transition the gutter cross section in advance of the curb ramp to meet the dimension and profile in Standard Plan R-28 Series. Use the same reinforcement pattern present in the existing gutter.

Place the railing sockets for concrete steps in the plastic concrete or drill into the hardened concrete.

Float the surface to produce a smooth surface, free from irregularities. Round the edges and joints with a finishing tool.

Texture the surface of sidewalks, curb ramps, driveways and steps, with a coarse broom transverse to the direction of travel.

Do not stamp, stencil, or in any way mark concrete with a company name, logo, or other such information.

D. **Sidewalk Joints.** Construct transverse and longitudinal expansion and plane-of-weakness joints at intervals and locations shown in Standard Plan R-29 Series. Align transverse joints with like joints in adjacent slabs. Construct joints with faces perpendicular to the surface of the sidewalk and no greater than ¼ inch from the position shown on the plans. Construct transverse joints at right angles to the centerline of the sidewalk and longitudinal joints parallel to the centerline.

Spade or vibrate and compact the concrete to fill voids at the faces of the joints.

Place expansion joint filler the full depth of the joint. Recess the top of the joint filler ¼ inch to ½ inch below the finished surface.

Cut the plane-of-weakness joints into the concrete after floating. Cut plane-of-weakness joints to at least ¼ the thickness of the sidewalk and from ⅛ inch to ¼ inch wide.

Do not seal the joints.

E. **Curing and Protection.** Cure and protect the concrete in accordance with subsection 602.03.M and subsection 602.03.T.

F. **Railing for Steps.** Place the railing in the sockets and fill the space between the pipe and the socket with a non-shrink mortar or grout selected from the Qualified Products List. Provide bracing as needed for the railing to remain plumb while the grout achieves the proper strength.

G. **Backfilling.** After the concrete gains the needed strength, remove fixed forms and backfill with sound earth. Compact and level the backfill 1 inch below the concrete surface.

H. **Detectable Warning Surfaces.** Install detectable warning surfaces in accordance with the manufacturer's instructions and Standard Plan R-28 Series.

I. **Curb Ramp Opening.** Construct curb ramp openings in accordance with subsection 802.03, Standard Plan R-28 series and as required to conform with the curb ramp geometry including, but not limited to slopes, counter slopes, running slopes, cross slopes, flares, and widths.

803.04. Measurement and Payment.

Pay Item	Pay Unit
Sidewalk, Conc, __ inch	Square Foot
Curb Ramp, Conc, __ inch	Square Foot
Detectable Warning Surface	Foot
Steps, Conc	Cubic Yard
Railing for Steps	Foot
Curb Ramp Opening, Conc	Foot

A. **Concrete Acceptance.** Conduct concrete quality control as specified in section 1002. The Engineer will conduct quality assurance as specified in section 1003. The Department will apply adjustments to this work based on the quality assurance results.

B. **Sidewalk, Concrete.** The Engineer will measure **Sidewalk, Conc**, of the required thickness, in place.

C. **Curb Ramp.** The Engineer will measure **Curb Ramp, Conc, __ inch** by the area of ramp and landing in place. Curb Ramp includes sidewalk sloped greater than the normal continuous sidewalk grades to meet the elevation of the curb opening or intermediate landing. Landing areas constructed and meeting the requirements of Standard Plan R-28 series will be included in the Curb Ramp item.

The unit price for **Curb Ramp, Conc, __ inch** includes the cost of landings, monolithic rolled curbs or side flares along the longitudinal edges of the ramp or landing, and transitions to existing sidewalk.

The Department will pay separately for replacing sidewalks, curbs, or curb and gutter outside of the area measured for **Curb Ramp, Conc, __ inch**.

The Department will pay for rolled curb adjacent to the non-traffic edge of parallel or combination ramps separately, only if the required height exceeds 18 inches along a continuous run.

D. **Detectable Warning Surface.** The Engineer will measure **Detectable Warning Surface** in place by length along the center of the 24 inches wide detectable warning surface material at required locations. The unit price for **Detectable Warning Surface** includes the cost of surface preparation and application.

E. **Steps, Concrete.** The Engineer will measure and the Department will pay for **Steps, Conc** based on plan quantities in accordance with subsection 109.01. The unit price for **Steps, Conc** includes the cost of foundation preparation, constructing forms, providing and placing steel reinforcement, providing, placing, finishing, and curing concrete, providing and placing backfill, and cleanup.

The Engineer will measure **Railing for Steps** in place by length of top rail, for each railing required. The unit price for **Railing for Steps** includes the cost of providing, fabricating, installing, and grouting the railing.

F. **Excavation and Backfill.** Unless the contract documents include separate pay items for excavation and backfill, the unit price for other items of work will include the cost of excavation and backfilling.

G. **Curb Ramp Opening, Conc.** The Engineer will measure **Curb Ramp Opening, Conc** in place along the joint between the curbing with the pavement including transitions to and from adjacent standard full height curb and gutter cross section.

Section 804. CONCRETE BARRIERS, GLARE SCREENS, AND FOUNDATIONS FOR LIGHT STANDARDS AND SIGN SUPPORTS

804.01. Description. This work consists of constructing concrete barriers, glare screens, and foundations for light standards and sign supports.

804.02. Materials. Provide material in accordance with the following:

Concrete, Grade 3000	1004
Concrete, Grade 4500	1004
Mortar and Grout, Type R-2, Type H-1	1005
Granular Material, Class II	902
Curing Compound	903
Dowels and Bar Reinforcement	905
Anchor Bolts and Nuts	908
Joint Materials	914
Electrical Conduit	918
Barrier Reflector Markers	922

804.03. Construction.

A. **Preparation of Base.** Prepare the base for concrete barrier in accordance with subsection 602.03.B.

B. **Forming.**

1. **Concrete Barrier and Glare Screen.** Use either fixed form or slip form methods to construct barrier and glare screen in accordance with Standard Plan R-49 series, R-54 series, and R-76 series. Verify a smooth surface with uniform appearance.

   Form the top and faces of barrier and glare screen within a tolerance of ½ inch over 10 feet, based on the Engineer's use of a 10 foot straight edge, except at grade changes and curves. Construct barrier or glare screen free of high or low areas and other irregularities. Repair minor defects while the concrete is plastic, using mortar obtained by screening out the coarse aggregate from the barrier, or glare screen concrete.

2. **Light Standard Foundations and Sign Support Foundations.** Cast in place light standard and sign support foundations using fixed forms, in accordance with Standard Plan R-50 and R-51 series. The Engineer may approve casting the footings without using forms where soil conditions allow.

C. **Reinforcement, Anchor Bolts and Dowels.**

1. **Reinforcement.** Place steel reinforcement in accordance with subsection 706.03.E.

2. **Dowels.** Install anchor dowels as required where casting barrier separately from the base. Set the dowels in the base while the concrete is plastic, or drill holes into the hardened concrete base and grout the dowels in place. Use non-shrinking grout selected from the Qualified Products List.

   If glare screen is cast separately from the barrier, drill holes for dowels into the hardened concrete and grout the dowels in place. Use non-shrinking grout selected from the Qualified Products List.

   Clean holes with a jet of compressed air, free of oil and water, with a minimum pressure of 90 psi. If using hydraulic grout, wet the interior surfaces of holes just before grouting.

3. **Anchor Bolts.** Position the anchor bolts for light standards and sign supports, as required, and secure with a template. Correct improper positioning of anchor bolts as directed by the Engineer before placing the concrete. Leave the template in place for at least 24 hours after placing concrete.

D. **Finishing.** Finish barrier and glare screen surfaces exposed to traffic with a smooth, uniform finish. Correct minor blemishes and irregularities on the barrier surface with a fine textured broom.

Do not add water to the concrete surface to aid finishing.

E. **Stenciling.** Stencil survey station numbers into the traffic sides of the barrier in accordance with subsection 602.03.L.

Do not stamp, stencil, or in any way mark concrete with a company name, logo, or other such information.

F. **Curing.** Cure concrete barriers, glare screens, and foundations in accordance with subsection 602.03.M.

Protect the treated surface with an unbroken film for at least 5 days. If the film is damaged during curing, including rain damage, apply a new coat of material to the affected areas equal in curing value to the original coat.

G. **Joints.** Construct transverse joints in accordance with the plans. If constructing the barrier on a concrete base or shoulder not separated by a sealed expansion joint, construct expansion joints and plane-of-weakness joints in the barrier directly over the corresponding joints in the concrete base or shoulder.

H. **Concrete Barrier Backfill.** In split barrier sections, backfill with Class II granular material between the barrier sections and below the concrete filler slab. The Engineer may approve alternate backfill material.

Place the backfill material in layers no greater than 9 inches deep and compact to 95%. Do not backfill cast-in-place concrete barrier until the concrete attains 70 percent of the 28-day flexural or compressive strength.

I. **Weather and Temperature Limitations.** Protect the concrete in accordance with subsection 602.03.T.

J. **Permanent Barrier Reflector Marker.** Install barrier reflector markers on single face, double face, and split concrete barrier in accordance with Standard Plan R-49, and R-54 series, and subsection 711.03.F.

804.04. Measurement and Payment.

Pay Item	**Pay Unit**
Conc Barrier, Single Face, Type __	Foot
Conc Barrier, Double Face, Type __	Foot
Conc Barrier, Split, Type __	Foot
Conc Barrier Backfill, CIP	Cubic Yard
Glare Screen, Conc	Foot
Glare Screen, Conc, Split	Foot
Light Std Fdn, Conc Barrier	Each
Sign Support Fdn, Conc Barrier, Truss Type __	Each

A. **Concrete Acceptance.** Conduct concrete quality control as specified in section 1002. The Engineer will conduct quality assurance as specified in section 1003. The Department will pay for this work based on the quality assurance results.

B. **Concrete Barrier and Glare Screen.** The Engineer will measure concrete barrier and glare screen parallel to the centerline, including transition sections to vertical-faced barrier. The Engineer will measure **Conc Barrier, Split** and **Glare Screen, Conc, Split** in place, including tapered sections at each end of the structure, in accordance with Standard Plan R-49 and R-76 series. The Engineer will not deduct gaps for light standard foundations, sign support foundations, or pier columns.

The Engineer will measure glare screen end sections as full-height sections.

C. **Concrete Barrier, Double Face, Type A,** and **Concrete Barrier, Double Face, Type B.** The unit price for **Conc Barrier, Double Face, Type A** includes the cost of constructing **Conc Barrier, Double Face, Type A** using dowels and a widened base, as for **Conc Barrier, Double Face, Type B** as shown on Standard Plan R-49 series.

The unit price for **Conc Barrier, Double Face, Type B** includes the cost of required dowels.

The unit price for other pay items will include the cost of the base for **Conc Barrier, Double Face, Type B**.

D. **Concrete Barrier Backfill, CIP.** The Engineer will measure **Conc Barrier Backfill, CIP** based on plan quantities in accordance with subsection 109.01. The unit price for **Conc Barrier Backfill, CIP** includes the cost of backfill placed between split sections.

The Engineer will measure, and the Department will pay for the concrete filler slab between split sections, in accordance with subsection 803.04, as **Sidewalk, Conc, 4 inch**. The unit price for **Sidewalk, Conc, 4 inch** includes the cost of placing the fiber joint filler.

The Department will not make deductions in these quantities for gaps for light standard foundations, sign support foundations, or pier columns.

E. **Steel Reinforcement.** The unit prices for **Glare Screen, Conc** and **Glare Screen, Conc, Split** include the cost of steel reinforcement, if required.

F. **Installing Glare Screen.** The unit prices for **Glare Screen, Conc** and **Glare Screen, Conc, Split** include the cost of drilling into the existing barrier and grouting in the steel reinforcement if a concrete glare screen is cast on top of an existing concrete barrier.

Section 805. HOT MIX ASPHALT CURB

805.01. Description. This work consists of conditioning and treating the surface shown on the plans for placing Hot Mix Asphalt (HMA) curb and constructing HMA curb.

805.02. Materials. Provide materials in accordance with the following:

HMA Mixture 501
Bond Coat SS-1h, CSS-1h..... 904
Asphalt Cement..... 904

Construct the HMA curb with the same HMA mixture required to construct the leveling and top courses of pavement.

805.03. Construction. Construct HMA curb in accordance with subsection 501.03, and as modified by this subsection, or as shown on the plans.

A. **Equipment.** Provide equipment in accordance with subsection 501.03.A and this subsection.

Provide a self-propelled, HMA curbing machine capable of placing vertical curved and straight line curb. Equip the machine with templates for the required cross sections.

B. **Bond Coat.** Apply bond coat to adjacent surfaces prior to the placement of HMA curb.

C. **Placing HMA Sloped Curb.** Use the leveling course mixture for the first stage of sloped curb construction and the top course mixture for the second stage.

D. **Placing HMA Vertical Curb.** Rolling is not required. Compact the mixture using the curbing machine template. Provide a tight surface texture. Remove and replace curb that shows segregation, slumping, or misalignment, at no additional cost to the Department.

Place and compact HMA sloped curb using the curbing machine template and mainline paving equipment. Remove and replace curb that shows segregation, slumping, or misalignment, at no additional cost to the Department.

E. **Backfilling.** Delay backfilling until 24 hours after the placement of the HMA curb, unless earlier backfill placement is approved by the Engineer. Place and compact the backfill material, without disturbing the curb.

805.04. Measurement and Payment.

Pay Item	**Pay Unit**
Curb Slp, HMA	Foot
Curb Vertical, HMA	Foot

The Engineer will measure **Curb Slp, HMA** in place along the base of the curb face or along the flow line of the gutter, with no deductions for catch basins or inlet castings. The unit price for **Curb Slp, HMA** includes the cost of providing and applying bond coat. The unit price for relevant surfacing quantities includes the cost of HMA mixture quantities.

The Engineer will measure **Curb Vertical, HMA** in place along the base of the curb face or along the flow line of the gutter, with no deductions for catch basins or inlet castings. The unit price for **Curb Vertical, HMA** includes the cost of providing and placing HMA mixture quantities and applying bond coat.

Section 806. SHARED USE PATHS

806.01. Description. This work consists of preparing grade and constructing a concrete or hot mix asphalt (HMA) shared use path.

806.02. Materials. Provide material in accordance with the following:

HMA Mixture	501
Coarse Aggregate 21AA, 21A, 22A	902
Granular Material	902
Concrete Curing Material	903
Joint Filler	914
Concrete, Grade 3000	1004

806.03. Construction. Construct the shared use path as shown on the plans, or as directed by the Engineer.

A. **Equipment.** Provide equipment in accordance with subsection 501.03.A and subsection 602.03.A, except as modified by the following:

1. **Hauling Equipment.** Avoid damaging the grade by limiting the size and weight of hauling units. Repair damage caused by use of oversized equipment at no additional cost to the Department.

2. **Pavers.** Use self-propelled pavers capable of extending in 1-foot increments and paving at least 8 feet wide.

   Use of an automated paver is not required. A spreader may be used to place HMA shared use paths adjacent to paved shoulders or curb if the spreader can place shared use path pavement meeting the required tolerances.

   Construct concrete shared use paths using slip form paving equipment or fixed forms with a Department-approved screed that can place shared use path pavement in accordance with the plans. If using fixed forms, use straight, full depth forms, free of warp and capable of resisting deformation during concrete placement.

3. **Rollers.** Use tandem, steel-wheeled rollers for compacting materials. The Engineer may allow alternate rollers. Repair damage caused by equipment at no additional cost to the Department.

B. **Preparation of Base.** If the existing earth grade meets the requirements of the contract, compact, smooth, and trim as directed by the Engineer.

If vegetative cover and root mat is present, remove to at least 2 inches deep and dispose of the material off the right-of-way in accordance with subsection 201.03.A.4. Compact, smooth, and trim the subgrade as directed by the Engineer.

Maintain the moisture content of the subgrade to provide stable support for the paver and hauling units. Aerate, water, and compact to provide support, as approved by the Engineer.

Prepare the specified grade to within a tolerance of ¾ inch of the required grade. Maintain the grade in a smooth and compacted condition until the aggregate surface course has been placed. Repair any rutting or other disturbance caused by the Contractors operations prior to placing the aggregate surface course. Compact the grade in accordance with the *Density Testing and Inspection Manual*.

Use granular material for additional embankment. Use aggregate to treat unstable subgrade areas.

C. **Placing and Compacting HMA Mixtures.** Place HMA mixtures in layers no greater than 3 inches deep.

Place HMA mixtures to produce a smooth, dense surface, free of irregularities within ¼ inch of the required grade when checked with a 10-foot straightedge, excluding vertical curves.

D. **Placing and Finishing Concrete.** Place forms in accordance with subsection 602.03. Maintain a moist base when placing concrete. Do not place concrete on frozen layers, or if the grade is unstable from excessive moisture. Place concrete pavement mixtures to produce a smooth, dense surface, free of irregularities. Place the concrete to the required depth and finish in accordance with Standard Plan R-28 series.

At driveways with curb and gutter on the drive approach, provide a curb drop to allow an opening for the shared use path. Construct the curb drop in accordance with Standard Plan R-28 series.

Do not stamp, stencil, or in any way mark concrete with a company name, logo, or other such information.

E. **Joints for Concrete.**

1. **Transverse Plane-of-Weakness Joints.** Space transverse plane-of-weakness joints at 12-foot intervals. Saw the joint ⅛ inch wide and 1 inch deep, or form the joint with a grooving tool. Use a 6-inch wide grooving tool with a ⅛ inch radius. Do not seal the joints.

2. **Transverse Expansion Joints.** Space full depth transverse expansion joints at 200-foot intervals. Install a ½ inch thick pre-molded joint filler ¼ inch below the surface of the concrete. Do not seal the joints.

F. **Finish Grading.** Blade or place embankment material against the exposed edge of the shared use path. Leave the path surface free draining. Restore the disturbed area by adding topsoil, roadside seeding and mulch, or sodding in accordance with section 816.

806.04. Measurement and Payment.

Pay Item	Pay Unit
Shared use Path, Grading	Foot
Shared use Path, Aggregate	Ton
Shared use Path, Aggregate, LM	Cubic Yard
Shared use Path, HMA	Ton
Shared use Path, Conc	Square Yard

A. **Shared use Path, Grading.** The Engineer will measure **Shared use Path, Grading** in place, along the centerline of the path, and within the limits shown on the plans. The unit price for **Shared use Path, Grading** includes the cost of the following:

1. Excavation;
2. Compacting the grade;
3. Providing and compacting embankment;
4. Grading curb cuts for ramps and driveways;
5. Fine grading of constructed grades; and
6. Required brushing, tree trimming, and removing and disposing of excess material.

B. **Shared use Path, Aggregate.** The unit price for **Shared use Path, Aggregate** includes the cost of providing and placing the aggregate to treat areas of unstable subgrade, as determined by the Engineer.

C. **Shared use Path, HMA.** The Engineer will measure **Shared use Path, HMA** by the weight of HMA mixture used to build the path. The unit price for **Shared use Path, HMA** includes the cost of providing, placing, and compacting the HMA mixture.

D. **Shared use Path, Concrete.** Conduct concrete quality control as specified in section 1003. The Engineer will conduct quality assurance as specified in section 1004. The Department will pay for this work based on the quality assurance results and this subsection.

The Engineer will measure **Shared use Path, Conc** based on plan quantities in accordance with subsection 109.01.

E. **Slope Restoration.** Slope Restoration will be paid for separately.

F. **Curb Ramps, Curb and Gutter Removal and Placement.** The Department will pay separately for placement and removal of curb ramps, and curb and gutter, and other appurtenances, in accordance with subsection 204.04, and subsection 803.04.

Section 807. GUARDRAIL, GUARDRAIL TERMINALS, AND MISCELLANEOUS POSTS

807.01. Description. This work consists of constructing, reconstructing and erecting guardrail, guard posts, guide posts, guardrail terminals, guardrail anchorages and mailbox posts, and excavating, backfilling and disposing of surplus materials.

807.02. Materials. Provide material in accordance the following:

Sound Earth 205
Guardrail Beam Elements and Hardware 908
Reflectors 908
Steel Posts 908
Wood Posts 912
Guardrail Blocks 912

807.03. Construction.

A. **Grading and Drainage.** Before constructing guardrail elements, grade the shoulder and berm to provide drainage. For approach guardrail terminals, grade to Class A slope tolerances.

Remove excess material and dispose in accordance with subsection 205.03.P. The Engineer may allow this material to be spread thinly over the roadway slopes, provided it does not kill vegetation or block drainage.

B. **Placing Posts.** Drive posts or set posts in augered holes. For posts located within 3 feet of existing culverts, set posts in drilled holes. The bottom of the holes must be within 3 inches of the dimension shown on the plans. Compact the bottom of drilled holes to provide a stable foundation. Verify the exposed portion of posts meet plan dimensions. Backfill the posts with sound earth compacted in 12 inch layers. The posts must be plumb after installation is complete.

Remove and replace posts damaged during driving that would prevent proper functioning of the guardrail, as determined by the Engineer. Do not damage nearby structures, shoulders, or slopes during driving. Replace damaged posts and repair damage to structures, shoulders, and slopes at no additional cost to the Department.

Use the same material for all posts in a discrete run of guardrail, except where the plans require wood posts. Do not burn or weld posts in the field.

C. **Guardrail Beam Elements, Blocks and Hardware.** Erect beam guardrail to conform to the line and grade shown in the contract.

Bolt the beam elements and blocks to each post. Make splices, only at posts, by lapping in the direction of traffic. Do not burn or weld beam elements in the field. Where placing guardrail on a

curve with a radius between 150 feet and 1,000 feet, tighten splice bolts before attaching to the posts.

Shop bend beam elements for curves with a radius of 150 feet or less. Identify each shop-bent curved beam element with a metal tag or permanent marking showing the radius of curvature to the nearest 5 feet as shown on Standard Plan R-60 Series.

Bolt lengths shown on the plans are based on the standard dimensions given for the materials and do not include manufacturer's tolerances. Draw bolts tight and flush with the nuts. If using wood posts, do not leave bolts for Type BD, Type TD, and MGS-8D guardrail extending more than ½ inch beyond the nuts. Do not leave bolts for other types of guardrail extending more than 1½ inch beyond the nuts.

D. **Repair of Wood Posts and Blocks.** Field treat cuts, holes, and damage to posts and blocks, that occurs after pressure treatment, in accordance with subsection 912.03.

E. **Repair of Damaged Galvanized Surface.** Repair zinc coating on beam elements, steel posts, and fittings damaged in transporting, handling, or erection. Apply zinc coating to bare metal surfaces after drilling holes or slots on beam elements. Make repairs to galvanized surfaces in accordance with subsection 716.03.E and at no additional cost to the Department.

F. **Guardrail Terminals and Anchorages.** For guardrail terminals, the Engineer will allow field drilling of galvanized beam elements to attach terminal end shoes and anchor plates. Install the reflectorized obstacle marker panel on the nose of each terminal in accordance with the manufacturer’s specifications.

For structure anchorages, either sleeve or core drill bolt holes through concrete. Avoid spalling concrete during coring. If spalling occurs, remove the fragments and loosened concrete before installing the bolt.

Install curved guardrail anchorages when specified on the plans or when specified by the Engineer. Place the guardrail on a curve as shown on the plans or directed by the Engineer.

G. **Adjusting or Reconstructing Guardrail.** Disassemble, sort and stockpile the existing guardrail beam elements and endings. Sort the stockpiles of different elements into reusable and unusable material. Obtain the Engineer’s approval for reuse prior to installation. Remove concrete anchor blocks at the end of turned-down guardrail anchorages, and concrete footings for old guardrail cable anchorages. Unless otherwise indicated on the plans, any unusable material will become property of the Contractor.

Drill new slots in the beam elements and anchorages when needed in accordance with the Standard Plans.

Re-erect the reusable beams or new beams, offset/spacer or wood block outs, on new or existing

posts in accordance with the Standard Plans.

Backfill and compact the old post holes and voids caused by removal of concrete anchor blocks and footings in layers no greater than 12 inches.

Adjust guardrail heights as shown on Standard Plan R-60 series. Make height adjustments in the block mounting location only. Do not lift existing posts to adjust rail height. Ensure the post bolt (for Guardrail, Type B and Guardrail, Type MGS-8) or upper post bolt (for Guardrail, Type T) is not closer than 2 inches from the top of the wood or steel post. Field drill new holes in existing post if necessary.

Make height adjustments to usable existing guardrail approach terminals by reconstruction (complete removal and reinstallation) only. Replace unusable and substandard terminals with new standard terminals.

H. **Incomplete Guardrail Installations.** Within 5 calendar days, complete a continuous section of guardrail, including structure anchorages and guardrail terminals, or bridge thrie beam retrofit guardrail. This time period begins with the start of work on a continuous section of guardrail, and ends with the completion of work on a continuous section of guardrail.

Deliver adequate materials on the project before removing sections of guardrail or beginning new installations. Leave existing guardrail in place until preparatory work such as widening, embankment, and other construction items are complete. To reduce exposure of unprotected areas, coordinate and expedite shoulder construction where guardrail removal and replacement will occur.

If a guardrail section cannot be completely removed or installed by the end of the working day and the exposed beam element ending would face oncoming traffic, temporarily attach a terminal end shoe in accordance with Standard Plan R-66 series. A terminal end shoe, of appropriate type based on the beam guardrail installed, must be used on all guardrail installations. A cable assembly and strut is not required. Attaching the terminal end shoe does not waive the 5-day completion requirement.

If bridge approach guardrail cannot be properly attached to the bridge railing or connected to the bridge thrie-beam retrofit guardrail, fit the free end of the rail with the required special end shoe or thrie-beam terminal connector and temporarily attach to the bridge rail in accordance with the following:

1. Fit the exposed thrie-beam retrofit beam ending that faces oncoming traffic with a thrie-beam terminal connector. Attach the terminal connector to the reinforced concrete railing. Install and tighten splice bolts. Secure the terminal connector to the railing with at least one bolt extending completely through the railing in accordance with Standard Plan R-67 series.
2. Attach bridge approach guardrail that cannot be properly attached to the bridge railing, to a portion of reinforced concrete railing in accordance with Standard Plan R-67 series, except

that only one bolt will be required to secure the special end shoe or thrie-beam terminal connector to the railing. Install and tighten splice bolts. Extend the rail at least 3½ feet onto the bridge. If the Engineer approves, this temporary attachment may remain beyond the 5-day requirement stipulated above.

3. If the area of incomplete or removed guardrail is not behind traffic control devices installed for other work, install a lighted SHOULDER WORK (W21-5) sign and lighted, steady-burn, plastic drums, spaced at maximum intervals of 100 feet to delineate the incomplete portion of the guardrail section during the time it is exposed to traffic. Place plastic drums near the edge of the shoulder. Other traffic control devices may be required by the contract, or as directed by the Engineer.

I. **Temporary Beam Guardrail and Temporary Guardrail Terminals.** Construct temporary beam guardrail and temporary guardrail terminals in accordance with subsection 807.03 for beam guardrail and guardrail terminals. The Engineer may approve the use of salvaged or new materials for temporary installations; ensure the Engineer approves, before using salvaged materials.

Remove the guardrail and terminals when no longer required. Backfill and compact the post holes in lifts no greater than 12 inches. Take possession of the materials, disassemble, and remove them from the project.

J. **Salvaging Beam Guardrail.** Remove existing single or multiple beam guardrail and posts. Backfill the post holes in layers compacted to no greater than 12 inches. Deliver the beam elements to the locations designated in the contract documents, and stack the beams neatly, according to length. Unless otherwise required by the contract documents, take ownership of posts and hardware.

K. **Mailbox Posts.** Move existing mailbox supports and mailboxes, but maintain serviceability during construction. Install a new post at the permanent location after construction is complete. Attach the existing mailbox to the post and dispose of the existing support at the property owner's option. Set mailbox posts in the ground so the top is 4 feet above the surface of the shoulder of the road or mailbox turnout. The Engineer will determine the exact height. Use posts in accordance with Standard Plan R-74 series, and saw the top of the post level. The Engineer may approve alternate mailbox support designs that meet the criteria specified in the requirements of the AASHTO *Manual for Assessing Safety Hardware* (MASH). Remove, store, and provide to the property owner, newspaper boxes and supports that interfere with construction.

L. **Guard Posts and Guide Posts.** Drive or set guard and guide posts in drilled holes in accordance with subsection 807.03.B.

807.04. Measurement and Payment.

Pay Item	**Pay Unit**
Guardrail, Curved, Type __	Foot

Guardrail, Type __ ..... Foot
Guardrail, Backed, Det __ ..... Each
Guardrail Post, Culv ..... Each
Guardrail Approach Terminal, Type __ ..... Each
Guardrail Departing Terminal, Type __ ..... Each
Guardrail Anch, Bridge, Det __ ..... Each
Guardrail Anch, Median ..... Each
Guardrail Reflector ..... Each
Guardrail, Type __, Temp ..... Foot
Guardrail Approach Terminal, Type __, Temp ..... Each
Guardrail Departing Terminal, Type __, Temp ..... Each
Guardrail Anch, Bridge, Det __, Temp ..... Each
Guardrail, Salv ..... Foot
Guardrail, Mult, Salv ..... Foot
Post, Mailbox ..... Each
Post, Wood Guard ..... Each
Post, Wood Guide ..... Each
Guardrail, Reconst, Type __ ..... Foot
Guardrail Post, Furn and Install, __ inch ..... Each
Guardrail Height, Adj ..... Foot
Guardrail Anchored in Backslope, Type __ ..... Each
Guardrail Anch Bridge, Det __, Curved ..... Each

A. **Blading.** The cost of grading the shoulder and berm to provide drainage and disposing of excess material is included in unit price for related items of work.

B. **Guardrail.** The Engineer will measure **Guardrail, Curved, Guardrail**, and **Guardrail, Temp** along the face of the rail, excluding terminals, end shoes, and W beam backed guardrail that spans culverts. The unit price for **Guardrail, Curved** includes the cost of portions of guardrail with shop-bent beam elements.

The unit price for **Guardrail** includes the cost of providing and placing guardrail posts, blocks, and miscellaneous hardware.

The unit price for **Guardrail, Backed, Det __** includes the cost of providing beam elements, hardware, posts, and spacer blocks necessary to construct the span shown on the plans.

The unit prices for **Guardrail, Temp, Guardrail Approach Terminal, Temp**, and **Guardrail Departing Terminal, Temp** include the cost of removing temporary guardrail and terminals and backfilling postholes. The cost of providing, installing, and removing temporary guardrail beam elements, terminal end shoes, transition elements and hardware, and traffic control items described for incomplete guardrail installations in subsection 807.03.H.3 is included in the unit price for related guardrail pay items.

The Engineer will measure **Guardrail, Salv** and **Guardrail, Mult, Salv** along the face of the rail (one face for multiple beams), including terminals and end shoes.

Guardrail Reconstruction includes guardrail constructed using new or existing posts and reused beam elements of the type specified, measured by length in feet along the face of the rail, including reused existing terminals. The work includes:

1. Removal of existing guardrail, w-beam backed guardrail, guardrail approach terminals, guardrail departing terminals, thrie-beam retrofits, and guardrail anchorages;
2. Furnishing, as necessary, new posts, offset blocks, spacer blocks, wood blockouts, bolts, reflectors, and other pertinent fittings;
3. Backfilling old postholes;
4. Field drilling beam elements and repairing damaged galvanized surfaces;
5. Drilling holes in bridge railings, concrete barriers, and other concrete structures;
6. Transporting beam elements within the project limits; and
7. Dismantling, separating and stockpiling elements and disposing of waste or scrap material.

Reconstructed guardrail anchorages will be paid for as **Guardrail, Reconst, Type __** when rebuilt with existing beam elements. Otherwise, guardrail anchorages constructed with all new components will be paid for as **Guardrail Anch, Bridge, Det __** or **Guardrail Anch, Median**.

Reconstructed thrie-beam retrofit will be measured and paid for as **Guardrail, Reconst, Type __** when rebuilt with existing beam elements. **Bridge Railing, Thrie Beam Retrofit** will be paid for separately if it is necessary for the Contractor to furnish new thrie-beam retrofit installations due to insufficient quantities of reusable elements available on the project.

Reconstructed w-beam backed guardrail and long span guardrail will be measured and paid for as **Guardrail, Reconst, Type __** when rebuilt with existing beam elements. **Guardrail, Backed, Det __**, of the type specified, will be paid for separately if it is necessary for the Contractor to furnish new w-beam backed guardrail installations due to insufficient quantities of reusable elements available on the project. New long span guardrail, of specified detail type, will be paid for separately with other pay item(s), as specified in the contract documents or as specified by the Engineer, if it is necessary for the Contractor to furnish new long span guardrail installations due to insufficient quantities of reusable elements available on the project.

Reconstruction of reusable existing guardrail approach and departing terminals that meet current standards and if approved by the Engineer will be measured and paid for as **Guardrail, Reconst, Type __.**

Payment for removal of existing buried ends is included in the item of **Guardrail, Reconst, Type __**. Where only the existing terminal or anchorage is removed in a run that is otherwise not reconstructed, the removal will be paid for as **Guardrail, Rem**.

Installing posts within existing guardrail post intervals to modify the guardrail will be measured as units of **Guardrail Post, Furn and Install, __ inch** of the post length specified. The pay item includes furnishing and installing posts, offset blocks, bolts, and necessary fittings.

Guardrail Height, Adj will be measured in feet along the face of the rail adjusted and includes all necessary field drilling of existing posts. Pay quantities will be in increments of the post spacing called for on the plans, excluding anchorages and end shoes.

Guardrail Approach Terminal, Type __, of the type specified, will be paid for separately when required to replace unusable or substandard existing approach terminals. **Guardrail Departing Terminal, Type __**, of the type specified, will be paid for separately when required to replace unusable or substandard existing departing terminals.

Guardrail, Type __ and **Guardrail, Curved, Type __** of the type specified, will be paid for separately if it is necessary for the Contractor to furnish new beam elements due to insufficient quantities of reusable elements available on the project.

Guardrail Anchored in Backslope, Type __ includes all materials, equipment and labor, including slope excavation, and backfill. When a W-beam rubrail is called for on the plans, the unit price for **Guardrail Anchored in Backslope, Type __** includes all materials, labor, and equipment for installation of the W-beam rubrail.

Guardrail Anch Bridge, Det__, Curved includes all materials, labor, and equipment to construct a curved guardrail bridge anchorage of specified detail, with the curve radius shown on the plans or as directed by the Engineer.

C. **Guardrail Terminals.** Each terminal will be considered an individual unit.

The unit price for **Guardrail Approach Terminal** includes the cost of proprietary and standard elements, and hardware required for installation, including obstacle marker panel, and terminal end shoes.

The unit price for **Guardrail Departing Terminal** includes all materials, labor, and equipment to construct a departing terminal, excluding curved beam elements requiring shop bending. Curved beam elements requiring shop bending will be paid for separately as **Guardrail, Curved, Type__.**

D. **Miscellaneous Posts.** The unit price for **Post, Mailbox** includes the cost of the following:

1. Removing and relocating the existing mailbox support during construction activities;
2. Maintaining serviceability;
3. Placing a new post at the permanent location after construction activities are complete;
4. Removing the mailbox from the old support and attaching it firmly to the new post;
5. Disposing of the old support, at the property owner's option; and

6. Removing, storing, and providing the existing newspaper boxes and supports to the property owner.

The unit price for **Guardrail Post, Culv**, includes all labor, materials and equipment necessary to complete the installation in accordance with Standard Plan R-73 series.

Section 808. FENCING

808.01. Description. This Work consists of providing and erecting, or moving existing, woven wire fence, temporary fence, protective fence, chain link fence, high-tensile wire fence, or pedestrian fencing of structures.

808.02. Materials. Provide materials in accordance with the following:

Sound Earth 205
Fencing Materials 907
Structure Expansion Anchors and Bolts 914
Concrete, Grade 3000 1004

A. **Protective Fencing.** Provide new or used material for temporary and protective fencing. Wood posts for protective fencing do not require preservative treatment.

B. **Fence Fabric.** Provide either zinc-coated steel, or aluminum coated steel fabric for chain link fence. Only use PVC coated fence fabric if required by the contract.

C. **Moving and Salvaging Fence.** The Engineer may approve material salvaged from moved, temporary, or protective fencing for use as permanent fence provided it meets the requirements of section 907. Provide additional materials in accordance with section 907.

D. **Polyvinyl Chloride.** Meet the requirements in subsection 907.04 with the exception that the chain link fence and gates must be 48-inch thermal fused with a black plasticized Polyvinyl Chloride (PVC) coating.

1. **Fabric.** The vinyl coated steel chain link fence must meet the requirements of ASTM F668 Class 2b. The core must be 0.148 inches in diameter. The mesh size must be 2 inches. The color of the PVC coating must be black in accordance with ASTM F934.

2. **Framing.** Must be hot-dipped galvanized prior to vinyl coating. The thickness of the vinyl coating must be 10-14 mils applied by fusion bonding.

Provide a general certification that the materials provided meet the requirements stated above. The Department will conduct acceptance testing in accordance with subsection 907.02.

808.03. Construction. Erect a taut fence to the line required by the contract. Dispose of surplus excavated material and other debris in accordance with subsection 205.03.P. The Engineer will designate and mark trees and other vegetation to be saved. Construct the fence near designated vegetation and in naturally occurring wet areas, by hand, as directed by the Engineer.

A. **Concrete.** Place concrete per section 1004.

B. **Woven Wire Fence.** Use wood posts in swamps and areas of unstable soil.

If necessary to confine livestock, erect the permanent fence before removing the existing fence. If the permanent fence must be installed in the same location as the existing fence, install temporary fencing to be paid for as Fence, Temp at the contract unit price.

Install fencing near schools, play areas, or residential yards prior to removing the existing fencing.

1. **Clearing Fence Line.** Where clearing for fence is required, clear the fence line in accordance with subsection 201.03.C.

2. **Setting Posts.** Dig holes for wood posts in accordance with Standard Plan R-101 series with a tolerance of 3 inches.

   Leave at least 4½ feet of the post exposed. Set the wood posts plumb on the side designated for fastening the wire. Set with the butt end down. Backfill around the post with sound earth, thoroughly compacted in place.

   Steel posts must be plumb. Remove and replace bent or damaged posts.

   When placing posts, maintain the tops of posts at a uniform height above the ground. After erecting the fence, cut off the tops of wood posts to the required elevation.

   Set an intersection post in line with intersecting fences and brace in line with the intersecting fence. Connect both intersecting fences to the intersection post.

3. **Anchoring and Bracing Wood Posts.** Anchor and brace wood posts, except intermediate line posts, in accordance with Standard Plan R-101 series.

   If using cleats to anchor wood posts, use sawed lumber with durability equal to that of the posts. Secure timber braces to the post using galvanized spikes.

   Install a cable comprised of double strand, No. 9 galvanized wire, in accordance with Standard Plan R-101 series. Loop the cable around the end, corner, gate, angle, intersection, or intermediate braced post, and around the adjacent line post. Twist the cable until the top of the adjacent line post is drawn back 2 inches. Secure the cable to maintain tension.

4. **Anchoring and Bracing Steel Posts.** Anchor and brace steel posts in accordance with Standard Plan R-101 series.

   Brace end and gate posts with one brace in the direction of strain. Brace corner, angle, and intermediate posts in both directions. Brace intersection posts in three directions. Fasten braces near the top of the post. At depressions and alignment angles where stresses are created that may pull the posts from the ground, set the line posts in concrete.

5. **Installing Fabric and Barbed Wire.** Wrap each horizontal strand of wire around the end, corner, gate or intermediate braced post and wind around the wire leading up to the post.

   Stretch the wire fabric taut and fasten it to each post with the bottom of the fabric 2 inches above the ground. Use line posts as stretching anchorage only if they are anchored in concrete.

   Obtain the Engineer's approval for the method of splicing wires in woven wire fabric and barbed wire. Make the distance between the vertical wire stays, next to the splice, equal to the unspliced sections of woven wire fabric. Splice a woven wire and barbed wire fence only if connecting two rolls of wire. Do not make intermediate splices.

   Fasten the fence fabric to each steel post with at least six wire clamps.

   Attach the fence to each wood post with at least one staple for each horizontal strand. Use staples made of 9 gauge galvanized steel wire, at least 1½ inch long for soft wood, or at least 1 inch for hard wood posts.

   Fasten the barbed wire to each post 3 inches to 4 inches above the fabric.

6. **Installing Vinyl Coated Chain Link Fence.** Conduct the work according to section 808, Standard Plan R-98 series for the gates, and Special Detail 99 for the fence.

   Electronically submit one complete set of manufacturer's specifications to the Engineer for approval a minimum of 14 work days prior to fabrication of the materials. Do not fabricate any materials prior to receiving approval from the Engineer.

C. **Temporary Fence.** Erect temporary fence in accordance with subsection 808.03.A and subsection 808.03.B, except as modified by the following:

1. **Setting Posts.** Set line posts at least 2 feet into the ground and end posts at least 3 feet into the ground and do not trim the tops. The Engineer may allow the omission of intermediate braced posts.

2. **Installing Fabric.** Attach the fabric to wood posts with at least one staple for every third strand, or to steel posts with at least four wire clamps.

3. **Removing Temporary Fence.** Remove and dispose of the temporary fence, or salvage in accordance with subsection 808.02.C.

D. **Protective Fence.** Place a protective fence around excavations for bridges and pump stations, and other areas of the project in accordance with subsection 104.07.B and the plans, or as directed by the Engineer. Erect protective fence in accordance with

subsection 808.03.A and subsection 808.03.B, except as modified by the following.

1. **Anchoring and Bracing Posts.** Anchor and brace enough posts to keep the fabric taut.

2. **Maintaining Fence.** Maintain the protective fence until the Engineer directs its removal or accepts the project.

3. **Removing Protective Fence.** Remove and dispose of the protective fence.

E. **Chain Link Fence.** Erect chain link fence on steel posts set in concrete.

1. **Clearing Fence Line.** Clear the fence line in accordance with subsection 201.03.C.

2. **Setting Posts.** Set posts in concrete and brace. Install angle posts where the alignment of the fence deflects more than 10 degrees.

   Set an intersection post in line with intersecting fences. Connect both intersecting fences to the intersection post.

   Fit posts with Department-approved post caps.

3. **Braces.** Fasten braces to the end, corner, angle, intersection, gate, and intermediate braced posts with required steel fasteners.

4. **Installing Fabric and Top Tension Wire.** Stretch chain link fence fabric taut and fasten to each post with Department-approved fasteners. Space the fasteners no greater than 12 inches apart on the posts. Fasten the fence fabric to the tension wire, at no greater than 15-inch intervals, using fasteners fabricated from 12-gauge galvanized wire. Close fasteners to the full crimp position around the tension wire and fence fabric.

F. **High-Tensile Wire Fence.** Construct high-tensile wire fence in accordance with subsection 808.03.A and subsection 808.03.B. Erect the wires in accordance with the manufacturer's recommendations.

G. **Fencing on Structures.** Construct fencing on structures in accordance with subsection 808.03.E. Install a fully compressed lock washer on the bolt threads of exposed nuts. Construct handrails, as shown on the plans, as part of the fencing, in accordance with section 707.

H. **Moving Fence.** Remove the existing fence without damaging the materials. Set posts and anchors in the same manner and to the same depth and spacing as the original fence. Place the reset fence in at least as good condition as the existing fence before it was moved. If the fence consists of wire fabric, draw it taut but do not overstress the salvaged materials. Replace damaged or destroyed materials at no additional cost to the Department.

808.04. Measurement and Payment.

Pay Item	Pay Unit
Fence, Temp	Foot
Fence, Protective	Foot
Fence, Woven Wire with Wood Post	Foot
Fence, Woven Wire with Steel Post	Foot
Barbed Wire	Foot
Fence Gate, __ foot, for Woven Wire	Each
Fence, Chain Link, __ inch	Foot
Fence, Chain Link, __ inch, with (number) Strand of Barbed Wire	Foot
Fence Gate, __ foot, for __ inch Chain Link Fence	Each
Fence, High Tensile Wire	Foot
Fence, Structure	Square Foot
Fence, Moving	Foot
Fence Post	Each
Fence Material	Foot
Fence, Chain Link, __ inch, Vinyl Coated	Foot
Fence Gate, __ foot, for __ inch Chain Link Fence, Vinyl Coated	Each

A. **Concrete Acceptance.** Conduct concrete quality control as specified in section 1002. The Engineer will conduct quality assurance as specified in section 1003. The Department will pay for this work based on the quality assurance results.

B. **Fence.** The Engineer will measure fence in place and will not include gate openings in the measurement for **Fence, Temp; Fence, Woven Wire; Fence, Moving**; and **Fence, Chain Link**. The Engineer will measure gates separately.

The unit price for fence of the type required includes the cost of providing and installing posts, braces, fabric and hardware.

The Department will not make adjustments in price for handwork required to avoid damage to trees and vegetation designated to be saved.

If required, the Engineer will measure, and the Department will pay for barbed wire separately, except the unit price for **Fence, Chain Link, __ inch, with (number) Strand of Barbed Wire** includes barbed wire.

C. **Temporary and Protective Fence.** The Department will not pay separately for protective fence required in accordance with subsection 104.07.B.

If the Engineer directs, or the plans show the use of protective fence, the unit price for **Fence, Protective** includes the cost of providing and placing.

The unit prices for **Fence, Temp** and **Fence, Protective** include the cost of providing, erecting, maintaining, removing, and disposing of fence.

The Engineer will not deduct openings from measurements for **Fence, Protective**. The Engineer will not measure gates separately.

D. **Fence, Structure.** The unit price for **Fence, Structure** includes the cost of providing and installing posts, braces, and fabric, and all supporting, connecting, and auxiliary elements, including handrails if shown on the plans, for the erection of fences on existing or new structures.

E. **Fence, Moving.** The Engineer will measure **Fence, Moving** in place, at its new location. The unit price for **Fence, Moving** includes the cost of disassembling, moving the fence and installing it in its new location. The unit price also includes replacing posts or fabric damaged or destroyed by the Contractor's removal operation.

The Department will pay for new posts or new fence material, if shown on the plans or required by the Engineer, at the contract unit price for these items. If the contract does not include new post or new fence material pay items, the Department will pay for these as extra work.

Section 809. FIELD OFFICE

809.01. Description. This work consists of providing, equipping, operating, and maintaining field offices for the Engineer for the duration of the contract.

809.02. Materials. None specified.

809.03. Construction. Submit the location of the field office for approval by the Engineer.

Provide access and parking as required by the Engineer. Maintain access and parking, including grading, gravel, and snow removal.

The Engineer may terminate use of the field office during seasonal suspension of work. Any costs associated with suspension or extension of the field office will be paid for separately.

A. **General Requirements for Field Offices.** Provide field offices in accordance with the MIOSHA standards for the performance of required activities and tests.

Provide a Department-approved weatherproof trailer, building, or space within an existing building. Provide and maintain this space for the exclusive use of the Engineer as a field office for activities and field testing until the project is complete. When the trailer, building, or space is occupied by both the Contractor and the Engineer, separate the Engineer's space and the Contractor's space.

The Department will equip their space with office furniture, other than that required by the Contract documents.

Provide the following:

1. Heating and air-conditioning equipment that will maintain a temperature between 70 °F and 80 °F during working hours;
2. At least two wall-mounted electrical power outlets per room that conform to local electric codes for office use;
3. At least two 75 Watt electric lights per room;
4. Water and internet service;
5. A floor to ceiling height of at least 7 feet;
6. At least 6 feet of rigidly constructed, 30 inch wide counter;
7. At least one sash, hinged or sliding window per room;
8. Locks, bars, window locks, or a security system; and
9. First-aid kits, smoke detectors, and fire extinguishers required by local fire and safety authorities.

Maintain first-aid kits, smoke detectors and fire extinguishers.

Equip the office with a metal-covered board or steel plate, 48 inch by 48 inch. Provide a gas or liquid-fueled stove for heating and drying aggregate, with at least two burners and the required fuel. Provide for storage and usage of the fuel in accordance with the Michigan State Police, Fire Marshal Division. Provide exhaust vents and hoods.

B. **Specific Requirements for Each Class of Field Office.**

1. **Field Office — Class 1.** Provide a building at least 1,000 square feet or trailer at least 14 feet by 70 feet. Provide hook-ups to sanitary sewer and water facilities, electric service, heating and cooling equipment, and internet service. Provide pressurized water facilities, potable water, and indoor plumbing. Provide a free standing refrigerator with freezer that has a minimum total interior volume of 18 cubic feet, and a microwave oven that has a minimum 800 Watt output. Partition the floor space to provide three offices (one office must have keyed locks to prevent access), a conference room, and a restroom. Provide a restroom with at least one sink with hot and cold water, and a toilet. Provide and maintain parking for at least 12 vehicles.

2. **Field Office — Class 2.** Provide a building of at least 600 square feet or a trailer at least 12 feet by 50 feet. Provide a prefabricated outdoor sanitary facility, pressurized water for testing, and bottled water for drinking. Provide hook-ups for electric service, heating and cooling equipment, and internet service. Regularly replenish the bottled water supply, and clean and maintain the sanitary facility. Partition the floor space to provide at least two offices, where one office has keyed locks for secure access. Provide and maintain parking for at least 8 vehicles.

3. **Field Office — Class 3.** Provide a building of at least 365 square feet or trailer of at least 8 feet by 45 feet. Provide a prefabricated, outdoor sanitary facility, pressurized water for testing, and bottled water for drinking. Provide hook-ups for electric service, heating and cooling equipment, and internet service. Regularly replenish the bottled water supply, and clean and maintain the sanitary facility. Partition the floor space to provide at least two offices, where one office has keyed locks for secure access. Provide and maintain parking for 6 vehicles.

809.04. Measurement and Payment.

Pay Item	**Pay Unit**
Field Office, Cl __	Month
Field Office, Utility Fees	Dollar
Field Office, Secure Storage, Survey Equipment	Month
Field Office, Secure Storage, Testing Samples and Supplies	Month

A. **Field Office, Cl.** The unit price for **Field Office, Cl __** includes the cost of setup, providing access, grading, maintaining, plowing snow, and utility hook-up charges. The Engineer will measure **Field Office, Cl __** in full months for the time required. The Department will pay for this item on a monthly basis, with the first pay estimate following the first full month of occupancy.

Any use of the field office, by the Department, during the month will constitute a full month. The Contractor is responsible for paying taxes, and providing required permits and insurance for field-office-occupancy by Department personnel.

If the contract does not include a pay item for **Field Office, Cl __**, and the Department requires the Contractor to provide a field office, the Department will consider it extra work.

B. **Field Office, Utility Fees.** The Department will establish a budget for **Field Office, Utility Fees** in advance of the project. The unit price for **Field Office, Utility Fees** includes the cost of monthly usage fees for electricity, gas, internet services and charges, cleaning, bottled water, monthly water and sanitary service. The Department will reimburse the Contractor for monthly usage fees for electricity, gas, internet, cleaning, bottled water, water and sanitary charges incurred by the Department. The Department will reimburse the Contractor monthly, for field office utility fees, at invoice costs, with the first pay estimate after receipt of paid invoices from the Contractor. The Department will not allow mark-ups.

If the Engineer terminates use of the field office during seasonal suspension of work, the Department will continue to reimburse the Contractor for **Field Office, Utility Fees** during the suspension.

C. **Field Office, Secure Storage, Survey Equipment**. The unit price of **Field Office, Secure Storage, Survey Equipment** includes the cost of setup, providing access, maintaining, and securing storage area. The Engineer will measure **Field Office, Secure Storage, Survey Equipment** in full months for the time required. The Department will pay for this item on a monthly basis, with the first pay estimate following the first full month of occupancy.

D. **Field Office, Secure Storage, Testing Sample and Supplies**. The unit price of **Field Office, Secure Storage, Testing Samples and Supplies** includes the cost of setup, providing access, maintaining, securing storage area, and equipment needed for testing samples. The Engineer will measure **Field Office, Secure Storage, Testing Samples and Supplies** in full months for the time required. The Department will pay for this item on a monthly basis, with the first pay estimate following the first full month of occupancy.

Section 810. PERMANENT TRAFFIC SIGNS AND SUPPORTS

810.01. Description. This work consists of providing, fabricating, and erecting traffic signs and supports in accordance with the *Michigan Manual on Uniform Traffic Control Devices* (MMUTCD), the *Michigan Standard Highway Signs Manual*, and the *MDOT Sign Support Standard Plans*.

A. **Terminology.**

Defect. Physical imperfections affecting function, performance, or durability of a sign or support. Defects include dents, scratches, nicks, blemishes, mottles, dark spots, scuffs, streaks, warpage, sheeting lift, and bolt head dimples.

Patch. A small piece of reflective sheeting material used to cover a defect or imperfection on a sign surface.

Post Spacing. Center-to-center distance between posts.

Substrate. Material to which sheeting is applied (wood or aluminum).

Warp. Deformation caused by bending or twisting in posts or substrate.

Wedge. Tapered hardwood used to secure wood posts in sleeves.

810.02. Materials. Provide materials in accordance with the following:

Adhesive Anchoring 712
Curing Compounds 903
Steel Reinforcement..... 905
Structural Steel..... 906
Anchor Bolts, Nuts, and Washers 908
Structure Anchors and Bolts 914
Electrical Conduit 918
Permanent Traffic Signs..... 919
Sign Supports and Mounting Hardware 919
Concrete, Grade 3000, 3500..... 1004

Provide Grade 3500 concrete for cantilever and truss sign support foundations. Provide Grade 3000 concrete for other sign support foundations.

810.03. Construction. Before beginning excavation or post driving operations, determine the location of underground utilities as specified in section 107.

Place signs at the bottom height shown on the plans or in accordance with the MDOT *Sign Support Standard Plans*.

Repair zinc coating on sign supports, damaged during transportation, handling, or erection, in accordance with subsection 716.03.E, and at no additional cost to the Department.

A. **Fabrication.**

1. **Trusses and Cantilevers.** Fabricate in accordance with the Sign Support Standards.

2. **Steel Column Breakaway Sign Supports.** Fabricate in accordance with the Sign Support Standards. Blast clean and galvanize structure components in accordance with section 716. Field verify the correctness of breakaway heights.

3. **Bridge Sign Connections.** Fabricate in accordance with the Sign Support Standards. Blast clean and galvanize steel structure components in accordance with section 716. Field verify the correctness of bridge sign connection strut lengths for fabrication. The Engineer must approve the strut lengths prior to commencing fabrication.

4. **Signs.** Fabricate in accordance with the Michigan *Standard Highway Signs Manual* or as required by traffic sign graphic design layout plans.

B. **Delineators.** Remove posts, including reflectors or sheeting, in accordance with subsection 810.03.U. Dispose of materials in accordance with subsection 204.03.B.

1. **Installing Rigid Delineator Posts.** Drive steel posts plumb into the ground in accordance with Standard Plan R-127 series. Do not bend the post or damage the top.

2. **Installing Flexible Delineator Posts.** Install flexible delineator posts with the required anchoring accessories, in accordance with the post manufacturer's directions. Do not bend or damage the posts. Install the flexible post plumb with its reflective sheeting perpendicular or radial to oncoming traffic. Replace posts or sheeting damaged during installation at no additional cost to the Department.

3. **Reflectors.** Mount reflectors as shown on the Standard Plan R-127 series. Reflectors and mounting hardware must be in accordance with subsection 919.03.

4. **Reflective Panels**. Provide and install reflective panels to sign supports with a minimum width of 2 inches with the length to be measured from the bottom of the sign as follows:

   3 feet – Signs with 4 feet bottom height and combination signs on same supports.
   6 feet - All other signs and applications.

   Install the reflective material per the manufacturer's installation instructions. Install the reflective panel to the sign support using stainless steel fasteners.

C. **Steel Post Sign Supports and Square Tubular Steel Sign Supports.** Drive or embed posts so sign faces and supports are within $^{3}/_{16}$ inch of plumb over 3 feet. Place posts within 2 percent of the plan distance, as measured from center-to-center of posts.

Do not damage the top of posts during driving. Install steel sign supports and square tubular steel sign supports in accordance with the Sign Support Standards.

D. **Wood Post Sign Supports.** Erect wood sign support posts to ensure sign faces and supports are within $^{3}/_{16}$ inch of plumb over 3 feet. Place the posts within 3 percent of the plan distance, as measured from center-to-center of posts.

For wood post sign supports that do not require pre-drilled holes, place the end with the most severe strength defects on the top. The Engineer will not require forms for concrete, provided the Contractor prevents earth from falling into the limits of the excavation.

The Contractor may use tubular shells in soils where boreholes will not stay open.

E. **Installing Steel Posts Through Concrete.** If installing steel sign posts, including square tubular steel sign supports or steel delineator posts through existing concrete, drill or saw cut a separate hole through the concrete for each post. Drill or cut post holes no greater than 1 inch larger than the largest cross-sectional dimension of the post. After drilling or sawing, remove the concrete debris from the hole. Clean and dry the area around the hole. Insert the galvanized steel post into the hole and embed to a depth of 3½ feet below the top of concrete grade. Fill the hole around the post with a silicone sealer.

If installing posts in new concrete, the Contractor may form holes before placing the new concrete.

F. **Installing Wood Posts Through Concrete.** If installing wood sign posts through existing concrete, drill or saw cut a separate hole through the concrete for each post. Drill or cut postholes to a diameter of at least 18 inches. After drilling or sawing, remove the concrete debris from the hole. Clean and dry the area around the hole. Center the galvanized steel sleeve and wood post in the hole.

If installing wood posts in new concrete, the Contractor may form holes before placing the new concrete.

G. **Sign Band.** Provide and install bands to fasten a single sign or route marker cluster bracket to the supports in accordance with the Sign Support Standard Plans SIGN 740 series, or as directed by the Engineer.

H. **Concrete Glare Screen and Concrete Median Barrier Connections.** Provide and install sign supports on concrete glare screen or concrete median barrier in accordance with the MDOT *Sign Support Standard Plans*. Place supports so the sign face and post are within $^{3}/_{16}$ inch of plumb over 3 feet.

I. **Foundations for Steel Column Breakaway Sign Supports.** Auger the holes for supports. The Engineer will not require concrete forms, provided the Contractor prevents earth from falling into the limits of excavation.

The Contractor may use tubular shells in soils where boreholes will not stay open.

Place the concrete in accordance with subsection 706.03.H. Hold the stub column in position with a template for at least 24 hours after placing the concrete. Construct the foundation with the top elevation as shown on the Sign Support Standards or as required.

J. **Cantilever and Truss Foundations.** If opening the project or section to traffic before or during construction of cantilever sign support and truss sign support foundations, provide temporary traffic control devices in accordance with section 812. Maintain the temporary traffic control devices at each foundation until completion of the foundation, backfill, and, if required, guardrail installation. Construct the foundation to the top elevation shown on the Sign Support Standards or as required.

1. **Excavation.** Excavate in accordance with subsection 206.03.A.

2. **Forms.** Construct forms in accordance with subsection 706.03.D.

   The Contractor may omit forms for footings or foundation portions more than 6 inches below the finished earth grade, if the earth outside the neat lines of the foundation shown on the plans does not intrude into the excavation.

3. **Hand Chipping.** Remove unsound or loose concrete with air hammers or other Engineer-approved methods. Salvage existing steel reinforcement in the wall or barrier. Saw cut the area, designated for removal to at least ½ inch deep, along a line determined by the Engineer.

   Remove the concrete around truss anchor bolts to an area at least 3 inches beyond the perimeter of the bolt pattern and 3 inches below the embedded depth of the bolts, as shown on Sign Support Standard Plan SIGN 610 series. Remove the concrete from exposed reinforcing steel to provide a clearance of at least ¾ inch behind the steel. Remove loose material, and blast clean the exposed surfaces and existing steel reinforcements. Blow out the area with oil-free compressed air.

5. **Existing Steel Reinforcement.** Treat exposed steel reinforcement in accordance with subsection 712.03.I.

6. **Placing Steel Reinforcement.** Place steel reinforcement in accordance with subsection 706.03.E.

7. **Setting Anchor Bolts and Placing Concrete.** Position anchor bolts and place concrete in accordance with subsection 810.03.N.1.

8. **Surface Finish.** Finish exposed surfaces in accordance with section 706.

9. **Curing.** Use a white membrane curing compound, except during cold weather. In cold weather, protect the concrete in accordance with subsection 706.03.N.

10. **Backfilling.** Ensure the Engineer approves the backfill material and compaction method before placing backfill. Backfill in accordance with subsection 206.03.B. Place and compact backfill around the foundation in layers no greater than 9 inches thick

K. **Drilled Piles for Cantilever and Truss Foundations.** Construct drilled piles for cantilever and truss foundations in accordance with section 718.

L. **Cantilever Sign Supports.** Transport and handle cantilever sign supports without damaging the members. Do not lift cantilever box sections by chains or internal truss members. Use nylon slings that wrap the entire cross section and provide at least a two point pickup, for handling the truss sections. Erect cantilever sign supports in accordance with the following sequence.

1. Place nuts and washers, install upright column without arms, and tension nuts in accordance with subsection 810.03.N.2.

2. For Type E cantilevers, place the arms, without the sign, on the erected column. Tighten bolts in accordance with the turn-of-the-nut method specified in subsection 707.03.E.6.d. Discard nuts and bolts loosened or removed after full tensioning. The Engineer will not require replacement of tightened bolts, loosened by tightening adjacent bolts.

3. For Type J cantilevers, align the truss box and truss box splice connection angles in the relaxed position and tighten bolts to a snug tight condition in accordance with subsection 707.03.E.6.c. The lock washers must be fully compressed after snug tightening has been completed. Place the truss box, without the sign, on the erected column. Align truss box connection flanges with the upright column connection flanges and tension bolts in accordance with the turn-of-the-nut method specified in subsection 707.03.E.6.d.

4. Place the sign panel on the erected arms. Field drill holes in the aluminum mounting supports that receive the sign panel mounting U-bolts to ensure the final position of the sign panel is level.

5. Upon completion of the cantilever sign support structure erection, stencil the structure number, as shown on the plans, on the vertical support member at least 4 feet, but no more than 6 feet above the sign structure base plate. Use black urethane spray paint and 2 inch gothic style font numbers and letters for stenciling. Place the stencil on the side of the structure facing the roadway. Place all stenciling on the vertical support members on

the right side of the roadway unless a cantilever is installed on the left side of the roadway per the signing plans. Notify the Engineer in writing upon completion of stencil placement.

M. **Truss Sign Supports.** Transport and handle truss sign supports without damaging the members. Do not lift truss box sections by chains or internal truss members. Use nylon slings that wrap the entire cross section and provide at least a two point pickup, for handling the truss, truss sections, and end supports. Erect truss sign supports in accordance with the following sequence.

1. Place nuts and washers, install upright columns, and tension nuts in accordance with subsection 810.03.N.2.

2. For Type C & D trusses, bring truss box connection flanges into full contact in the relaxed position and tension bolts in accordance with the turn-of-the-nut method specified in subsection 707.03.E.6.c. Discard nuts and bolts loosened or removed after full tensioning. The Engineer will not require replacement of tightened bolts, loosened by tightening adjacent bolts. Place the truss box, without the sign, on the erected columns. Align the truss box on the upright columns and connect with U-bolts.

3. For Type E trusses, align the truss box and truss box splice connection angles in the relaxed position and tighten bolts to a snug tight condition in accordance with subsection 707.03.E.6.c. The lock washers must be fully compressed after snug tightening has been completed. Place the truss box, without the sign, on the erected columns. Align truss box connection flanges with the upright column connection flanges and tension bolts in accordance with the turn-of-the-nut method specified in subsection 707.03.E.6.d.

4. Place the sign panel on the erected truss boxes. Field drill holes in the aluminum mounting supports that receive the sign panel mounting U-bolts to ensure the final position of the sign panel is level.

5. Upon completion of the truss sign support structure erection, stencil the structure number, as shown on the plans, on the vertical support member at least 4 feet, but no more than 6 feet above the sign structure base plate. Use black urethane spray paint and 2 inch gothic style font numbers and letters for stenciling. Place the stencil on the side of the structure facing the roadway. Place all stenciling on the vertical support members on the right side of the roadway. Notify the Engineer in writing upon completion of stencil placement.

Load the truss to prevent vibration during erection. If the roadway is open to traffic, load the truss by installing the permanent signs or blank sign panels. If the roadway is closed to traffic, the Contractor may load the truss with sandbags. Fasten temporary loads and leave in place until installation of permanent signs.

N. **Anchor Bolts for Sign Support Structures and Lighting.**

1. **Anchor Bolt Installation.** Place and hold anchor bolts plumb and aligned using a steel template. Secure the template before placing the concrete and leave in place at least 24 hours after concrete placement. Place concrete in accordance with 706.03.H and finish smooth and horizontal. Do not erect the sign support until the concrete attains 70 percent of the minimum 28 day compressive strength, or until test beams or cylinders attain a flexural strength of 500 psi.

   The Engineer will reject a foundation if the anchor bolts are out of position, or greater than 1:40 out-of-plumb. Do not bend anchor bolts to straighten, or move into position, or alter the structure base plate.

2. **Anchor Bolt Tightening.** Mark the flange and each nut and bolt to reference the required rotation.

   Place the bottom leveling nuts and washers onto the anchor bolts and thread down as close to the concrete foundation as possible. Level the leveling nuts keeping them as close to the concrete foundation as possible. The distance from the top of the concrete foundation to the bottom of the leveling nuts must not exceed 1 inch. Place the upright column on to the anchor bolts and bring all leveling nuts into full bearing with the bottom of the structure base plate.

   Apply beeswax, or an Engineer approved equivalent, to the bearing face and threads of the top nuts. Place the top nuts and washers onto the anchor bolts and tighten loosely with a wrench or by hand. Ensure the top nuts and leveling nuts fully bear on the structure base plate.

   Tighten anchor nuts to a snug condition as defined below.

   Apply beeswax, or an equivalent, to the top nut bearing face and threads before placing on the anchor bolt. Tighten top nuts to a snug condition, defined as follows:

   a. **Snug Condition.** The tightness attained by the full effort of a person using a wrench with a length 14 times the diameter of the anchor bolt, but at least 18 inches. Apply the full effort as close to the end of the wrench as possible. Pull firmly by leaning back and using entire body weight on the end of the wrench until the nut stops rotating. Use at least two separate tightening passes. Tighten the top nuts first and sequence the tightening of each pass so the opposite side nut will be tightened until all the top nuts in that pass are snug. After all top nuts are tightened, repeat the procedure to tighten the bottom nuts. If present, lock washers must be fully compressed once tightening is complete.

      Check the snug tightness of the top nuts in the presence of Department personnel ensuring snugged nuts meet the torque requirements in Table 810-1:

Table 810-1 Anchor Bolt Snug Condition Required Torque		
Bolt Diameter (in)	**Torque (ft-lbs)**	
	Minimum	**Maximum**
1	100	200
1¼	200	400
1½	300	600
1¾	400	600
2	500	700
2¼	700	900
2½	800	1,000

Once a snug tight condition is verified, use a hydraulic wrench to rotate the top nuts an additional one-third turn. Accurately mark the structure base plate, nuts and bolts to reference one-sixth and one-third required rotations. Tighten the nuts in two separate passes, turning the nuts one-sixth of a turn with each pass. Use a tightening sequence to ensure the nut opposite the tightened nut is subsequently tightened. Do not allow the leveling nuts to rotate during top nut tightening. Once hydraulic wrench tightening is complete, mark the upright column with the wrench operator's initials and the date of tightening.

Hydraulic wrench must have been calibrated within the previous year and must have a calibration chart showing conversions between psi and ft-lbs.

3. **Anchor Bolt Testing.** Check the tightness of the top nuts in the presence of Department personnel a minimum of 48 hours after the additional one-third turn. Using a hydraulic wrench, apply torque to the nuts in accordance with Table 810-2 and verify no movement of the nut occurs. Mark the upright column with the wrench operator's initials and the date of the 48 hour check.

Table 810-2 Anchor Bolt Final Turn Required Torque	
Bolt Diameter (in)	**Minimum Torque (ft-lbs)**
1	300
1¼	630
1½	1,120
1¾	1,820
2	2,770

2¼	4,010
2½	5,550

If the nuts rotate during the 48 hour check, proper bolt tension was not achieved. Ultrasonic testing and calibration procedures, used by the Department for final acceptance, are available upon request.

Tighten the nuts or washers, determined loose by the Department during acceptance procedures, in accordance with this subsection. The Engineer will determine if removal, disassembly, or re-erection of the structure is necessary. If the Department determines nuts require tightening, after initial installation, remove and reinstall nuts and washers and, if the Engineer determines necessary, remove, disassemble, and re-erect the entire structure at no additional cost to the Department.

The Department will ultrasonically test the anchor bolts for acceptance after the 48 hour check is deemed acceptable. Ultrasonic testing and calibration procedures used by the Department for final structure acceptance are available upon request.

O. **Bridge Sign Connections.** Construct steel and concrete bridge sign connections in accordance with the Sign Support Standard Plans.

P. **Bolt Replacement in Retained Bridge Mounted Sign Connections.** Replace bolts connecting the bracket, sign, diaphragm and hanger to the sign connection. Do not replace bolts in concrete bridge beams and concrete deck fascia.

Provide connection hardware in accordance with subsection 906.07.

Remove and replace bolts, nuts, flat washers and lock washers that connect the bolted bridge sign connection bracket to the bridge structure fascia beam, one at a time. Replace the bolts in accordance with subsection 707.03.E.6 and tighten using the turn-of-nut tightening method in subsection 707.03.E.6.d.

Q. **Overhead Lane Assignment Structures.** Construct overhead lane assignment structures in accordance with the Sign Support Standard Plans SIGN 760 series. After placement of foundations, steel poles, and steel cables, erect the overhead lane assignment signs in accordance with the following:

1. Connect two angles to each sign; one on the top and one on the bottom;
2. Assemble the cable clamps, oval eye bolts, threaded rod, nuts, and washers on the top side of each sign; and
3. Hang the signs from the top cable and attach the bottom plate to the lower cable using cable clamps.

R. **Signs.** Provide complete signs, free of defects. Provide reflectorized sign faces, smooth and free of dents, wrinkles, and other defects. Provide signs with uniform color and brightness, free of warps or other deformations, and without mottling, streaks, or stains. Replace signs that do not meet the size, font, or legend layout requirements. Replace signs with unacceptable wrinkles, as determined by the Engineer.

The Engineer will allow no more than three patches per sign. Use patches made of the same material as the sign. Extend patches $^{9}/_{16}$ inch beyond the outer edges of the defect. The Engineer will determine the maximum patch size. Do not patch more than 2 percent of the total number of signs per project. For projects with 100 signs or fewer, the Engineer will determine the maximum number of patched signs.

The Engineer will provide installation date stickers to the Contractor at the preconstruction meeting.

At the time of installation, place an installation date sticker on the back lower portion of the signs. Ensure the date sticker is fully visible after installation.

Store signs, delivered for use on the project, in accordance with the sheeting manufacturer's recommendations. Replace or repair signs damaged, discolored, or defaced during fabrication, transportation, storage, or erection.

Position and fasten signs to the support. Tighten nuts to the bolts, including nylon washers, in contact with reflective sheeting in accordance with the reflective sheeting manufacturer's recommendations. Erect signs clean and free of substances that would hide or obscure portions of the sign face.

Along roadways open to traffic, cover signs with messages not immediately applicable. Cover signs in accordance with subsection 812.03.D.2.

If replacing existing signs on project sections open to traffic, remove existing signs after erecting new signs visible to motorists. Remove replaced signs and supports from the right-of-way within 7 days. Remove signs and supports in accordance with subsection 810.03.U. Leave existing overhead signs in place until the installation of new signs. Retain existing signs, not shown on the plans, unless otherwise directed by the Engineer.

Do not install signs behind obstructions. Prune vegetation obstructing signs.

Remove packaging and protective materials from sign panels and clean the exposed sign faces in accordance with the manufacturer's specifications. Remove and dispose of excess material. If sign construction disturbs the site, level and repair the area.

Install signs and supports in accordance with the tolerances specified in this subsection.

1. **Extra Holes.** The Engineer will allow no more than two extra holes per sign. Patch extra holes on the front and back sign surfaces. Use patch material of the same reflectivity, color, and age as the reflective sheeting on the sign. Apply patches in accordance with the sheeting manufacturer's recommendations.

2. **Offset.** Erect signs within 2 feet of the location shown on the plans, but do not erect signs closer to the edge of the traveled way than the distance shown on the plans or as specified in Sign Support Standard Plan SIGN 120 series.

3. **Bottom Height.** Erect signs with the bottom height in rural areas within 6 inches of the height shown on the plans, and in urban areas, within 6 inches above the bottom height shown on the plans.

4. **Sign Location.** Do not change the location of regulatory, gore, and no passing zone signs, and signs on cantilevers, trusses, and bridge connections without the Engineer's approval.

   Place advance warning signs within 10 feet longitudinally from the location shown on the plans. Place the advance warning signs at least the minimum longitudinal distance specified in the MMUTCD.

   Place other signs within 20 feet, longitudinally, of the location shown on the plans.

5. **Gaps.** Ensure gaps between plywood sheets do not exceed $^{1}/_{16}$ inch.

6. **Wedges.** Limit wedge thickness to between ¾ inch and 1 inch.

7. **Unacceptable Wrinkles.** Replace signs with the following defects:

   a. Wrinkles ending at an outside edge of the sign,
   b. Wrinkles greater than 3 inches long, or
   c. Wrinkles that split or damage the sheeting.

S. **Installing Department Supplied Sign.** Transport signs, supplied by the Department, from the location shown on the plans to the project. Notify the Department contact person at least 72 hours before picking up the sign.

T**. Hanger Mounts and Wall Mounts.** Fabricate and install hanger and wall mounts including drilling for anchor installation in accordance with sections 707, 712 and 810, the Sign Support Standards, or as required. Test the structural anchor system in accordance with section 712.

U. **Removal of Signs and Sign Supports.** Remove and salvage cantilever and truss sign supports using the methods required for erecting the supports. Remove, haul, and stockpile Type I signs, cantilevers, trusses, column breakaways, bridge connections, and all associated attaching

or fastening hardware at the offsite location required. Coordinate delivery of salvaged items with the Department contact person at least 72 hours before transporting to the Department property location as shown on the plans or as directed by the Engineer.

Take ownership of remaining signs, supports, and associated attaching or fastening hardware.

Pull, do not cut, sign and delineator supports requiring removal or replacement. If the Engineer determines posts or columns cannot be pulled, cut off at least 12 inches below grade and fill the hole. For sign supports in concrete surfaces, cut the support at the surface. Fill in the hole with grout or similar material completely. Finish to provide a smooth surface free from irregularities.

Remove bridge sign connections, welded to steel beams, by flame cutting. Leave a ¼ inch projection from the web. Grind the projection flush with the surface of the web to a surface roughness no greater than 250 micro inches per inch root mean square. Coat the surface with an Engineer-approved zinc-rich primer after grinding.

To remove bridge sign connections, bolted to steel beams, dismantle the bridge sign in reverse order from installation. If replacing an existing sign support, fill unused holes in bridge steel beams with galvanized high strength bolts, installed in accordance with subsection 707.03.E.6.

Remove bridge mount sign connection anchor bolts to concrete surfaces by unbolting or cutting, if the connection detail is not to be reused. Flame cutting of sign connections is prohibited. Cut and grind flush, anchor bolts embedded in the concrete. Core drilling for anchor bolt or insert removal is prohibited. Coat the exposed ends of the anchor bolts with an epoxy grout, or a tinted organic zinc rich primer in accordance with section 715.

If removing trusses or cantilevers, separate the truss box or cantilever arms without damaging the unit. Remove the truss box or cantilever arms before removing end supports. Remove end supports in reverse order from installation. Do not torch cut uprights of the end supports for removal. Do not scratch, scorch, or nick the cantilever or truss members.

V. **Removal of Sign Support Foundations.** Remove foundations to 12 inches below the ground surface and backfill in accordance with subsection 204.03.C. If the contract documents require complete removal of a foundation, remove sign support foundations in accordance with subsection 204.03.A.3 and backfill in accordance with subsection 204.03.C after new foundation is installed

Dispose of concrete and other deleterious material in accordance with subsection 205.03.P. Topsoil, seed, and mulch the removal area in accordance with subsection 816.03.

W. **Erection of Salvaged Sign Supports and Signs.** Handle and store signs and sign supports, salvaged for use on the project, in accordance with subsection 810.03.R. Transport, store, and erect salvaged supports and signs in accordance with subsection 810.03.U. Replace salvaged signs with damage or defects with new signs, at no additional cost to the Department.

Upon erection of salvaged sign supports stencil the structure support per subsections 810.03.L and 810.03.M as applicable.

810.04. Measurement and Payment.

Pay Item	Pay Unit
Delineator Reflector, (color)	Each
Post, (type), Delineator	Each
Delineator, Reflective Sheeting, __ inch by __ inch, (color)	Each
Post, Steel, __ lb	Foot
Post, Wood, __ inch by __ inch	Foot
Post, Wood, __ inch by __ inch, Direct Embedment	Foot
Post Hole Through Conc for Wood Post	Each
Post Hole Through Conc for Steel Post	Each
Band, Sign	Each
Glare Screen Connection, Conc	Each
Median Barrier Connection, Conc	Each
Median Barrier Connection, Conc, Perforated Steel Square Tube	Each
Glare Screen Connection, Conc, Perforated Steel Square Tube	Each
Perforated Steel Square Tube Breakaway System	Each
Fdn, Breakaway, W8 × (wt/ft)	Each
Fdn, Cantilever, Type __	Each
Fdn, Truss, Type __	Each
Fdn, Truss Sign Structure Type __, __ inch Dia, Cased	Foot
Fdn, Truss Sign Structure Type __, __ inch Dia, Uncased	Foot
Fdn, Cantilever Sign Structure Type __, __ inch Dia,Cased	Foot
Fdn, Cantilever Sign Structure Type __, __ inch Dia, Uncased	Foot
Column, Breakaway, W8 × (wt/ft)	Each
Cantilever, Type __	Each
Truss, Type __, __ foot	Each
Sign, Type __	Square Foot
Bridge Sign Connection, Conc, Type __	Each
Bridge Sign Connection, Steel, Type __	Each
Bridge Sign Connection, Bolt Replacement	Each
Overhead Lane Assignment Structure	Each
Installing MDOT Supplied Sign, Type __	Each
Sign, Type __, Rem	Each
Fdn, Wood Support, Rem	Each
Fdn, Entire, Cantilever, Rem	Cubic Yard
Fdn, Entire, Truss, Rem	Cubic Yard
Fdn, Column Breakaway, Rem	Each
Fdn, Cantilever, Rem	Each
Fdn, Truss, Rem	Each

Cantilever, Rem ..... Each
Truss, Rem..... Each
Bridge Sign Connection, Type __, Rem..... Each
Transporting Salv MDOT Materials..... Lump Sum
Cantilever, Type __, Erect, Salv..... Each
Truss, Type __, __ foot, Erect, Salv..... Each
Sign, Type __, Erect, Salv..... Each
Truss Connection, Hanger Mtd ..... Each
Sign Connection, Wall Mtd..... Each
Reflective Panel for Permanent Sign Support, __foot..... Each
Fdn, Perforated Steel Square Tube Sign Breakaway System, Rem..... Each
Delineator, Rem ..... Each
Sign, Type ___, Rem, Salv ..... Each

The unit prices for fabricated items include the cost of providing dimensional information for the relevant fabricated item.

A. **Sign Posts.**

1. **Post, Steel or Post, Wood.** The Engineer will measure sign supports to the nearest commercial length required. The Department will not pay for the portion of posts installed deeper than the depth shown on the plans, unless authorized by the Engineer.

   The unit price for **Post, Wood**, of the type required, includes the cost of providing and installing wood post sign supports set in a sleeve in concrete.

2. **Post Holes Through Concrete for Steel Posts or Post Holes Through Concrete for Wood Posts.** The unit prices for **Post Hole Through Conc for Steel Post** and **Post Hole Through Conc for Wood Post** include the cost of drilling or saw cutting a hole in existing concrete, silicone sealer, cleaning the site, and replacing damaged concrete.

   If installing posts in new concrete, the unit prices for **Post Hole Through Conc for Steel Post** and **Post Hole Through Conc for Wood Post** include the cost of the optional method of forming.

3. **Reflective Panel for Permanent Sign Supports.** The unit price for **Reflective Panel for Permanent Sign Supports** includes all labor, materials, and equipment required to fabricate, furnish and install the reflective panel to the sign supports as depicted on the plans or as directed by the Engineer.

4. **Glare Screen Connection, Conc, Perforated Steel Square Tube** or **Median Barrier Connection, Conc, Perforated Steel Square Tube.** The unit price for **Glare Screen Connection, Conc, Perforated Steel Square Tube** and **Median Barrier Connection, Conc, Perforated Steel Square Tube** includes all labor, materials, and equipment

required to fabricate, furnish, and install the connections in accordance with MDOT Sign Support Standards or as directed by the Engineer.

B. **Foundations.**

1. **Foundation, Truss Sign Structure and Foundation, Cantilever Sign Structure.** The Engineer will measure **Fdn, Truss Sign Structure** and **Fdn, Cantilever Sign Structure**, of the diameter required, from the bottom of the drilled shaft to the top of the finished foundation.

   The unit prices for **Fdn, Truss Sign Structure Type __, __ inch Dia, Cased** and **Fdn, Cantilever Sign Structure Type __, __ inch Dia, Cased** include the cost of concrete, slurry, steel reinforcement, permanent casings, anchor bolts, excavation, and disposal of excavated material.

2. **Foundation, Truss Sign Structure, Uncased and Foundation, Cantilever Sign Structure, Uncased.** The unit prices for **Fdn, Truss Sign Structure Type __, __ inch Dia, Uncased** and **Fdn, Cantilever Sign Structure Type __, __ inch Dia, Uncased** include the cost of concrete, slurry, steel reinforcement, temporary casings, anchor bolts, excavation, and disposal of excavated material.

C. **Bridge Sign Connections.** The unit prices for bridge sign connection pay items include the cost of locating connections and constructing and installing the sign supports.

The unit price for **Bridge Sign Connection, Bolt Replacement** includes the cost of bolted bridge connections, including retained diaphragms and hangers on steel bridges, and removing and replacing bolts and associated hardware. Removed bolts and hardware become the property of the Department.

D. **Hanger and Wall Mount Connections.** The unit prices for **Truss Connection, Hanger Mtd** and **Sign Connection, Wall Mtd** include the cost of furnishing, drilling for anchorage and installing truss and sign connections at the location shown on the plans.

E. **Overhead Lane Assignment Structure.** The unit price for **Overhead Lane Assignment Structure** includes the cost of constructing the foundations for installing structures and lane assignment signs.

F. **Signs.** The Engineer will not deduct corner radii or mounting holes when determining the area of sign faces. The Engineer will calculate the area using the smallest circumscribing rectangle. The Engineer will calculate the area of triangular signs using the area of the circumscribing triangle.

The unit price for **Sign**, of the type required, includes the cost of attaching devices and hardware, including brackets fabricating and erecting signs on supports, pruning vegetation, and site cleanup in accordance with subsection 810.03.R.

The Engineer will measure individual sign bands for payment. The unit price for **Band, Sign** includes the cost of furnishing and installing each sign band.

The unit price for **Sign, Type II** includes the cost of fabricating signs, workmanship, repair, and sealing plywood edges in accordance with subsection 919.02.A.2.

Before final acceptance, replace or repair approved for use, and in-use traffic sign installations, which are damaged by conditions not caused by the Contractor, as directed by the Engineer.

The Department will pay for replaced items at the contract unit price unless the Contractor justifies that the elapsed time between initial installation and the replacement installation warrants a price adjustment in accordance with Section 103. The Department will pay for repaired items as extra work.

G. **Certification of Structural Steel Plants.** The Department will not pay for costs incurred for the certification of structural steel plants. The Department will not consider claims by the Contractor or Fabricator for delays and inconvenience associated with the certification process.

H. **Installing MDOT Supplied Sign.** The unit price for **Installing MDOT Supplied Sign**, of the type required, includes the cost of loading the sign at the location shown on the plans, transportation, sign mounting hardware, and installation.

I. **Removal of Signs and Foundations.** The unit price for **Sign, Rem**, of the type required, includes the cost of removing supports, sign bands, concrete glare screen connections, or concrete median barrier connections, attaching or fastening hardware, and removing signs from supports and stacking by shape and size.

The unit prices for **Cantilever, Rem** and **Truss, Rem** include the cost of removing cantilever or truss supports.

The unit price for **Bridge Sign Connection, Rem**, of the type required includes the cost of removing connection brackets, hardware and filling unused holes created by the removal, cutting and grind the existing anchor bolts, grouting and/or coating the exposed ends.

The unit prices for constructing or removing foundations include the cost of placing topsoil, seeding, and mulch and restoring the area.

J. **Transporting Salvage MDOT Materials.** The unit price for **Transporting Salv MDOT Materials** includes the cost of loading, transporting, unloading, and stacking salvaged materials at the off-site location shown on the plans or directed by the Engineer.

K. **Cantilever, Erect, Salvage** and **Truss, Erect, Salvage**. The unit prices for **Cantilever, Erect, Salv** and **Truss, Erect, Salv**, of the types required, include removing, loading, transporting, unloading, storing after removal, and erecting the salvaged sign support on a new or existing foundation, as shown on the plans.

L. **Sign, Erect, Salvage.** The unit price for **Sign, Erect, Salv**, of the type required, includes removal, the cost of storing signs after removal, loading, transporting, unloading, erecting the salvaged sign on a new sign support, or existing sign support, as shown on the plans, and attaching devices, and hardware, including brackets.

The Department will pay separately for new sign supports.

M. **Sign, Rem, Salvage.** The unit price for **Sign, Rem, Salv**, of the type required, includes the cost of removing, loading, transporting, and storing signs in a protected and clean environment specified by the Engineer. Salvaged signs that are damaged or defected in the removal and storage process are to be replaced with new signs in accordance with subsection 810.03.W.

N. **Delineators.** The unit price for **Post, (type), Delineator** includes providing and installing the delineator post of the type specified.

Section 811. PERMANENT PAVEMENT MARKINGS

811.01. Description. This work consists of providing and applying retroreflective permanent pavement markings in accordance with the Michigan Manual on Uniform Traffic Control Devices. Provide markings, shapes, spacing, and dimensions that conform to the MDOT Pavement Marking Standard Plans.

811.02. Materials. Provide materials in accordance with the following:

Glass Beads 920
Wet Reflective Optics 920
Waterborne Pavement Marking Material 920
Low Temperature Waterborne Pavement Marking Material 920
Regular Dry Pavement Marking Material 920
Cold Plastic Pavement Marking Material 920
Thermoplastic Pavement Marking Material 920
Sprayable Thermoplastic Pavement Marking Material 920
Polyurea Pavement Marking Material 920
Modified Epoxy Pavement Marking Material 920
Preformed Thermoplastic Pavement Marking Material 920

Provide the Material Safety Data Sheets to the Engineer for required materials and supplies. Dispose of unused material and containers in accordance with the Federal Resource Conservation & Recovery Act (RCRA) of 1976, 42 USC 6901 *et seq*., and the Hazardous Waste Management Act, MCL 324.11101 *et seq*.

Provide samples of permanent pavement marking materials on Department request.

Ship all material to the job site in sturdy containers marked in accordance with subsection 920.01.A.

Submit to the Engineer prior to the start of work the manufacturer's recommended application rate of the wet reflective optics and the liquid applied pavement marking binder to be used on the project. If the manufacturer's recommended application rate differs from the specified rate in Table 811-1, the manufacturer's recommended rate supersedes the table values.

811.03. Construction.

A. **Equipment.** Apply longitudinal lines with certified self-propelled pavement marking equipment. The Engineer may approve other equipment for special markings or areas inaccessible to self-propelled pavement marking equipment.

Provide self-propelled equipment certified by the Department in accordance with the Equipment Certification Guidelines for Pavement Markings. Certification is effective for 2 years. Operate

marking equipment at no greater than the certified speed. The Engineer will assume a striper, operating above the certified working speed, has operated at that speed for the entire day. The Department may inspect the equipment at any time.

Use equipment capable of uniformly applying material to the required length and width.

Provide equipment for placing centerlines, capable of applying three, 4 inch minimum width lines on a two-lane road in one pass. If applying multiple centerlines, use three spray guns positioned 6 inches on center. For two lane freeways, apply the lane line from the left lane. For freeways with at least three lanes, apply the right lane line with the right edgeline.

Use an easily adjusted, dashing mechanism to retrace existing lane or centerline markings.

Use a self-propelled pavement marker capable of marking pavement in either direction on a roadway. Use a continuous skip cycle. Do not zero or return the cycle control unit to the beginning or start of a new cycle.

Provide a distance meter to measure the length of each line.

The Engineer may check the calibration of metering devices at any time. If the Engineer determines the equipment is unsatisfactory, use other methods approved by the Engineer.

Use equipment for placing hot-applied thermoplastic and sprayable thermoplastic material that can maintain the temperature recommended by the material manufacturer.

Allow time for the Engineer to inspect traffic control devices as shown in the pavement marking convoy typicals prior to marking applications. Correct traffic control devices not approved by the Engineer before continuing. If applying markings on a roadway closed to traffic, the traffic control devices specified in the pavement marking convoy typicals are not required, unless otherwise directed by the Engineer.

B. **General.** The Department will not provide storage buildings or space for permanent pavement marking equipment or materials.

If pavement marking plan sheets and/or Witness, Log are included in the project, the markings must be laid out by the Contractor prior to the permanent markings being applied. Layout is considered incidental to placement of permanent pavement markings. Provide the Engineer documented notice at least 2 calendar days prior to the Contractor pavement marking crew arriving onsite to layout. The onsite Engineer must approve the layout prior to the marking application. Notify the Engineer if it is discovered during layout that the pavement width or geometry has been altered or is different from the planned or logged configuration. The Contractor and Engineer will discuss and document the resolution for marking layout in such areas. If pavement marking plans and/or Witness, Log are not in the project, it is the responsibility of the Engineer to provide layout for the permanent pavement markings.

For any portion of the project that pavement marking plan sheets or details are included, layout the permanent pavement markings according to the pavement marking plans. If the contract documents call for Witness and Log, the Contractor must witness and log the existing markings in accordance with the following.

Provide a pavement marking layout plan consisting of aerial imagery, computer generated, and/or hand sketches with legibly handwritten or documented dimensions. When using aerial imagery, the pavement markings must be sketched in for any sections where they are not clearly visible. Required dimensions include turn lane storage lengths, taper lengths, stop bar location as measured from the centerline of the intersection or the crosswalk markings (if present), symbol and legend locations, cross hatching location and spacing, longitudinal line style changes, and any other dimensions required to return markings to the pre-construction configuration. The layout plan must additionally indicate lane widths of all lanes, shoulders, bike lanes, and other features at all transition points where these elements are added and/or removed and at every ½ mile interval where there are no changes to pavement widths and/or the pavement marking configuration.

Provide the pavement marking layout plan to the Engineer prior to pavement removal operations and/or any pavement markings being disturbed. If any changes are needed the Engineer will mark up a copy of the pavement marking layout plan and initial any changes. The Engineer will provide any mark ups and documented approval of the pavement marking layout plan to the Contractor within 10 calendar days of initial receipt.

The pavement surface must be clean and dry before applying pavement markings. Air blast to remove material that prevents pavement markings from adhering to the pavement surface. Remove debris or dead animals from the line track.

For solid lines, apply 4 inch lines, 6 inch lines, 8 inch lines, and 12 inch lines, no greater than ¼ inch wider than the required width. Apply solid lines with no gaps or spaces. Apply a double line as either two solid lines or one solid line and one broken line.

For new broken lines, apply 12½-foot long lines, no greater than 4 inches longer than the required length. Leave a 37½-foot gap between new broken lines. Continue this 50-foot cycle of broken line and gap, as shown on the plans. Apply new lines at the required location within a lateral tolerance of 1 inch.

When applying centerline and lane lines on new construction, retrace at least five existing adjacent skips to match the existing pavement marking cycle.

Retrace existing pavement markings using lines equal to the width and length of the original markings. For existing 4-inch, 6-inch, 8-inch, or 12-inch wide lines, retrace no greater than ¼ inch wider than the existing line. If existing lines exceed the nominal widths, ensure the total line widths, existing and retraced, do not exceed 5 inches, 7 inches, 9 inches, and 13 inches.

For existing 12½-foot broken lines, place the retraced line to a longitudinal tolerance of no greater than 4 inches longer than the existing line. If existing lines exceed 12½ feet long, ensure broken line lengths for existing and retraced lines do not exceed 13 feet.

Mix liquid materials during application. Do not thin materials. Uniformly apply pavement marking material at the rates shown in Table 811-1.

Table 811-1
Pavement Marking Material Application Rates per Mile (a, b)

Binder Type	Wet Binder Thickness Without Beads (mil)	Min. Dry Thickness With Beads (mil)	Binder Volume & Bead Weight	Line Type							
				Broken				Solid			
				4 in	6 in	8 in	12 in	4 in	6 in	8 in	12 in
Waterborne	15	20	Binder (gal)	4.2	6.2	8.3	12.4	16.5	24.7	33	49.4
			Bead (lb)	32	48	64	96	128	192	256	384
Low Temperature Waterborne	15	20	Binder (gal)	4.2	6.2	8.3	12.4	16.5	24.7	33	49.4
			Bead (lb)	32	48	64	96	128	192	256	384
Regular Dry	15	20	Binder (gal)	4	6	8	12	16	24	32	48
			Bead (lb)	24	36	48	72	96	144	192	288
Thermoplastic	90	110	Binder (lb)	435	653	870	1,305	1,740	2,610	3,480	5,220
			Bead (lb)	50	75	100	150	200	300	400	600
Sprayable Thermoplastic	30	40	Binder (lb)	140	210	280	420	560	840	1,120	1,680
			Bead (lb)	50	75	100	150	200	300	400	600
Modified Epoxy	20	45	Binder (gal)	5.5	8.25	11	17	22	33	44	66
			Bead (lb)	As directed by the manufacturer							
Polyurea	20	45	Binder (gal)	5.5	8.25	11	17	22	33	44	66
			Bead (lb)	As directed by the manufacturer							

a. Binder yield indicates the amount to produce the required mil thickness without drop on beads.
b. Bead yield indicates the amount of drop on beads required for the given binder.

The Engineer will determine the application rates by dividing the quantity of material used by the length of the line placed. The Engineer may check application rates at start up, and during work, without prior notice to the Contractor.

Load pavement marking materials on the pavement marking machine without interfering with, or delaying traffic. Operate striping equipment to prevent traffic from crossing the uncured markings. Prevent vehicles from being sprayed.

Position bead guns to direct beads into the line material and provide a uniform application of beads.

If applying markings in off road areas open to traffic, including rest areas, roadside parks, or car pool lots, maintain traffic to prevent vehicles from crossing the uncured markings.

The Department does not require glass beads for waterborne pavement marking material for parking stalls and cross hatching if marking rest areas, roadside parks, and car pool lots. Beads are not to be placed in liquid shadow markings.

Apply pavement marking lines straight or in uniform curvature. Markings must be sharp, well-defined, free of uneven edges, overspray, or other visible defects, as determined by the Engineer. Remove pavement markings outside the required tolerances and re-apply in the correct locations. Re-apply unprotected pavement markings damaged by traffic and remove tracked lines at no additional cost to the Department.

C. **Removal.** If required, remove existing pavement markings or in accordance with subsection 812.03.F.

When surface applying pavement markings on new concrete, remove the curing compound in accordance with subsection 812.03.F.

If removing special markings, including legends, symbols, crosswalks, cross hatching, and stop bars, install the new markings within 5 working days.

If removing markings, collect and dispose of removed material.

D. **Application, Temperature and Seasonal Restrictions.** Ensure the material application rates in Table 811-1, the temperature and seasonal application restrictions in Table 811-2, and the additional requirements detailed in this subsection for specific materials are met when applying any material, unless directed by the Engineer. Document moisture testing and provide results to the Engineer.

1. **Waterborne.** The Engineer will not decide the suitability of specific days for the application of waterborne paint. Re-apply lines damaged by weather at no additional cost to the Department.

   The Contractor may place waterborne pavement markings immediately on new Hot Mix Asphalt (HMA) pavement.

For micro-surfacing projects, place waterborne pavement markings on the surface course before opening to traffic. Allow the surface to wear for at least 30 days or as determined by the Engineer before applying the 2nd application of waterborne or a first application of sprayable thermoplastic.

Waterborne paint may be used outside the specified dates and temperatures only when approved by the Engineer.

2. **Low Temperature Waterborne.** If seasonal limitations prevent placement of waterborne paint, the Engineer may approve low temperature waterborne paint.

   Wait at least 5 days after placing the pavement surface before applying low temperature waterborne pavement markings to new HMA wearing surface. The Engineer may waive the 5 day waiting period.

3. **Regular Dry Paint.** If seasonal limitations prevent the placement of waterborne paint, the Engineer may approve regular dry paint.

   Wait at least 14 days after placing the pavement surface before applying regular dry pavement markings to new HMA wearing surface. The Engineer may waive the 14 day waiting period.

4. **Cold Plastic.** Prepare the pavement surface and apply the cold plastic tape in accordance with the manufacturer's specifications.

   Remove curing compound from new concrete surfaces before applying cold plastic tape. For pavements with two or more layers of existing overlay cold plastic marking material or any other non-compatible materials, remove the existing marking material before installing the new cold plastic markings.

   Install cold plastic tape symbols, legends, crosswalks, cross hatching, and stop bars, as shown on the standard plans, unless otherwise required in the plans.

   a. **With Contact Cement.** Apply contact cement recommended by the cold plastic marking manufacturer and approved by the Department. Mix contact cement during application. Do not thin the contact cement. Allow time for solvents to evaporate from the adhesive before applying the cold plastic marking. Apply the contact cement by a method recommended by the manufacturer and ensure it is beneath the entire marking.

      Provide non-adhesive backed cold plastic for stop bars and crosswalks. Provide adhesive backed cold plastic for all other special markings.

      Immediately after placement, roll transverse and special markings at least four times with a roller weighing at least 200 pounds. The Engineer will not require additional rolling for longitudinal applications if the equipment for installing the line is equipped with a roller.

b. **Primerless – Without Surface Preparation Adhesive.** Ensure dry weather for at least 24 hours, and a dry pavement surface before applying the primerless cold plastic tape marking. Clean the pavement surface using an air compressor with at least 185 cfm air flow and 120 psi. On all pavement surfaces, prevent damage to transverse and longitudinal joint sealers.

   Immediately after placement, roll transverse and special markings at least six times with a roller weighing at least 200 pounds. The Engineer will not require additional rolling for longitudinal applications if the equipment installing the line is equipped with a roller.

c. **Primerless – With Surface Preparation Adhesive.** Use surface preparation adhesive on all primerless cold plastic tape as recommended by the manufacturer or as shown on the plans.

   Ensure dry weather for at least 24 hours, and a dry pavement surface before applying the primerless cold plastic tape marking. Clean the pavement surface using an air compressor with at least 185 cfm air flow and 120 psi. On all pavement surfaces, prevent damage to transverse and longitudinal joint sealers.

   Immediately after placement, roll transverse and special markings at least six times with a roller weighing at least 200 pounds. The Engineer will not require additional rolling for longitudinal applications if the equipment installing the line is equipped with a roller.

5. **Thermoplastic.** The pavement must be free of excess surface and subsurface moisture that may affect bonding. The Engineer will not decide the suitability of specific days for the application of thermoplastic.

   Heat and apply the thermoplastic material within the temperature range recommended by the manufacturer.

6. **Sprayable Thermoplastic.** The pavement must be free of excess surface and subsurface moisture that may affect bonding. The Engineer will not decide the suitability of specific days for the application of sprayable thermoplastic.

   Heat and apply the sprayable thermoplastic material within the temperature range recommended by the manufacturer.

   On projects calling for 10,000 feet or less (per color) of sprayable thermoplastic pavement markings to be placed per workday, the Contractor, with approval of the Engineer, has the option of placing two applications of waterborne paint instead of the sprayable thermoplastic pavement markings. The second application of waterborne is to be completed between 14 and 60 days after the initial application unless otherwise directed by the Engineer.

7. **Polyurea.** The pavement must be free of excess surface and subsurface moisture that may affect bonding. The Engineer will not decide the suitability of specific days for the application of polyurea.

   Surface preparation requirements for special and longitudinal polyurea pavement markings depend on surface conditions.

   Prepare new HMA surfaces and HMA surfaces open to traffic for 10 days or less with no oil drips, residue, debris, or temporary or permanent markings, by cleaning the marking area with compressed air.

   Prepare new portland cement concrete (PCC) surfaces and PCC surfaces free of oil drips, residue, and debris, temporary, or permanent markings, by removing the curing compound from the area required for pavement markings.

   Prepare existing HMA or PCC surfaces that do not have existing markings, but may have oil drip areas, debris, or both, by scarifying the marking area using non-milling grinding teeth or shot blasting. The Engineer will allow the use of water blasting to scarify the marking area on PCC surfaces.

   Prepare existing HMA or PCC surfaces with existing non-polyurea markings by completely removing non-polyurea markings.

   Prepare existing HMA or PCC surfaces with existing polyurea marking and that may have oil drip areas, debris, or both, by using the following methods:

   a. For existing polyurea pavement markings, scarify the proposed marking area using non-milling grinding teeth or shot blast.
   b. Occasionally existing polyurea pavement markings will require complete removal, which will be determined by the Engineer.

8. **Modified Epoxy.** The pavement must be free of excess surface and subsurface moisture that may affect bonding. The Engineer will not decide the suitability of specific days for the application of modified epoxy.

   Surface preparation requirements for special, and longitudinal modified epoxy pavement markings depend on surface conditions.

   Prepare new HMA surfaces and HMA surfaces open to traffic for 10 days or less free of oil drips, residue, debris, temporary, or permanent markings, by cleaning the marking area with compressed air.

Prepare new PCC surfaces and PCC surfaces free of oil drips, residue, and debris, temporary, or permanent markings, by removing the curing compound from the area required for pavement markings.

Prepare existing HMA or PCC surfaces that do not have existing markings, but may have oil drip areas, debris, or both, by scarifying the marking area using non-milling grinding teeth or shot blasting. The Engineer will allow the use of water blasting to scarify the marking area on PCC surfaces.

Prepare existing HMA or PCC surfaces with existing non-modified urethane markings by completely removing non-modified urethane markings.

Prepare existing HMA or PCC surfaces with existing modified urethane pavement markings or modified epoxy pavement markings and that may have oil drip areas, debris, or both, by using the following methods:

a. For existing modified urethane pavement markings or modified epoxy pavement markings, scarify the proposed marking area using non-milling grinding teeth or shot blast.
b. Occasionally existing modified urethane pavement markings or modified epoxy pavement markings will require complete removal, which will be determined by the Engineer.

9. **Preformed Thermoplastic.** The pavement must be free of excess surface and subsurface moisture that may affect bonding. The Engineer will not decide the suitability of specific days for the application of preformed thermoplastic.

Heat and apply the preformed thermoplastic material as recommended by the manufacturer. Feather all edges of the material with a putty knife while the preformed thermoplastic is still soft.

Table 811-2
Minimum Material Placement Temperature and Seasonal Restrictions (a)

Material	Minimum Air Temperature (°F) (b)	Minimum Pavement Temperature (°F) (c)	Start Date	End Date
Waterborne	50	50	May 1	Oct. 15
Low Temperature Waterborne	35	35	Oct. 1	May 1
Regular Dry	25	25	Oct. 1	May 1
Cold Plastic Tape – with Contact Cement	60	60	May 1	Oct. 15
Cold Plastic Tape – Primerless – without Surface Preparation Adhesive	60	60	Jun. 1	Sept. 1

Cold Plastic Tape – Primerless – with Surface Preparation Adhesive	40	40	Apr. 15	Nov. 15
Thermoplastic	50	50	May 1	Nov. 1
Sprayable Thermoplastic	50	50	Apr. 15	Nov. 15
Polyurea	40	40	Apr. 15	Nov. 15
Modified Epoxy	40	40	Apr. 15	Nov. 15
Preformed Thermoplastic	35	35	Apr. 15	Nov. 15
a. See text for more detailed information. b. Temperature must meet minimum and be rising. c. Pavement must be dry.				

E. **Second Application.** If the contract requires a second application of permanent pavement markings, complete two applications regardless of initial pavement marking conditions. Complete the second application from 14 days to 60 days after initial application in the same calendar year.

The Contractor may apply the second application before the required 14 days if approved by the Engineer.

F. **Call Back Painting.** The Engineer will provide a prioritized list of locations and limits for call back pavement marking painting.

Begin call back painting work within seven days of the Engineer's notification.

G. **Recessed Pavement Marking.** Install a recess (groove) in accordance with the pavement marking material manufacturer's installation instructions. All recessing configurations must be in accordance with the *Michigan Manual on Uniform Traffic Control Devices* and the Department Pavement Marking Standards.

1. Grooving Concrete and Hot Mix Asphalt Pavement. If there are no markings on the pavement, it is the Contractor's responsibility to layout and groove exactly where the permanent markings will be placed. If there are temporary painted pavement markings in the correct location, use these lines as a template for the grooving operation. If there are existing permanent pavement markings in place, remove them in accordance with subsection 812.03.F prior to grooving operations. The removal of any existing pavement markings will be paid for separately.

   Use equipment and methods approved by the manufacturer of the pavement marking material to be recessed for forming grooves in pavement surfaces. Dry-cut the grooves in a single pass using stacked diamond cutting heads on self-vacuuming equipment capable of producing a finished groove ready for pavement marking material installation.

   Ensure that the bottom of the groove has a fine corduroy finish. If a coarse tooth pattern results, increase the number of blades and decrease the spaces on the cutting head until the required finish is achieved.

2. Placing Recessed Pavement Markings. Place the pavement marking material in clean and dry grooves within 24 hours of the grooves being made. Locate the groove so the entire marking can be placed within the groove.

H. **Raised Thermoplastic Rumble Strips.** If required on the plans, furnish and install raised thermoplastic rumble strips on pavement, or as directed by the Engineer. Layout the thermoplastic rumble strips, prepare the pavement surface and apply the rumble strips in accordance with sections 811 and 920 and the following:

1. Clean the pavement surface, making sure the pavement is dry and above the minimum temperature for thermoplastic placement in Table 811-2.

2. Apply the thermoplastic in accordance with the manufacturer's recommendations and as shown in the MDOT *Pavement Marking Standards*.

3. Apply glass beads as recommended by the thermoplastic manufacturer.

I. **Raised Pavement Marker (RPM) Removal.** Remove RPM with equipment approved by the Engineer. During removal, do not disturb pavement more than 3 inches below the surface or more than 3 inches from the perimeter of the marker casting. The Engineer will stop marker removal if damage to the pavement exceeds these limits.

The Engineer will require patching, regardless of milling requirements, unless the Engineer determines damaged areas do not pose a hazard to traffic. Use a HMA mix approved by the Engineer, to patch concrete and HMA pavements that will receive a HMA overlay.

Use a prepackaged, hydraulic, fast-set material for patching structural concrete from the Qualified Products List for patching concrete pavement. Patch concrete pavement in accordance with the patch material manufacturer's specifications.

Patch HMA pavement, not requiring overlay, with the epoxy adhesive used to attach raised pavement markers to the pavement.

Clean and dispose of debris from RPM removal and patching operations.

J. **Wet Reflective Liquid Applied Pavement Markings.** Furnish and install wet reflective (WR) optics and liquid applied pavement marking materials. Place the binder, beads and WR optics in accordance with the manufacturer's recommendations and sections 811 and 920

K. **Guide Line Pavement Markings.** Provide all labor, material and equipment necessary to prepare pavement surface and layout and apply solid or dotted retroreflective guide line pavement markings. When using dotted guide lines to delineate vehicle movements, the guide lines must be recessed. Prepare pavement surfaces by using the following methods:

1. Remove all residue and debris resulting from the preparation work. Control and minimize airborne dust and similar debris generated by surface preparation and cleanup to prevent a hazard to motor vehicle operation or nuisance to adjacent property.

2. Do not damage transverse and longitudinal joint sealers on hot mix asphalt and portland cement concrete surfaces when performing removal and cleaning work.

3. Preformed tape markings must be ready for traffic immediately following surface preparation, application and tamping, and markings of other materials must be adequately protected until they can be crossed by traffic without tracking.

4. Replace or repair nonconforming material to the satisfaction of the Engineer, and at no additional cost to the Department.

811.04. Measurement and Payment.

Pay Item	Pay Unit
Pavt Mrkg, Waterborne, __ inch, (color)	Foot
Pavt Mrkg, Waterborne, 2nd Application __ inch, (color)	Foot
Pavt Mrkg, Wet Reflective Waterborne, 2nd Application __ inch, (color)	Foot
Pavt Mrkg, Waterborne, for Rest Areas, Parks, & Lots, __ inch, (color)	Foot
Pavt Mrkg, Regular Dry, __ inch, (color)	Foot
Pavt Mrkg, Regular Dry, 2nd Application, __ inch, (color)	Foot
Pavt Mrkg, Sprayable Thermopl, __ inch, (color)	Foot
Pavt Mrkg, Thermopl, __ inch, (color)	Foot
Pavt Mrkg, Thermopl, __ inch, Crosswalk	Foot
Pavt Mrkg, Thermopl, __ inch, Stop Bar	Foot
Pavt Mrkg, Thermopl, __ inch, Cross Hatching, (color)	Foot
Pavt Mrkg, Thermopl, Rumble Strip	Foot
Pavt Mrkg, Ovly Cold Plastic, __ inch, (color)	Foot
Pavt Mrkg, Ovly Cold Plastic, __ inch, Shadow Tape, Black	Foot
Pavt Mrkg, Ovly Cold Plastic, __ inch, Wet Reflective, (color)	Foot
Pavt Mrkg, Ovly Cold Plastic, __ inch, Dotted Turning Guide Line, (color)	Foot
Pavt Mrkg, Ovly Cold Plastic, __ inch, Stop Bar	Foot
Pavt Mrkg, Ovly Cold Plastic, __ inch, Cross Hatching, (color)	Foot
Pavt Mrkg, Ovly Cold Plastic, __ inch, Crosswalk	Foot
Pavt Mrkg, Ovly Cold Plastic, (legend)	Each
Pavt Mrkg, Ovly Cold Plastic, (symbol)	Each
Pavt Mrkg, Polyurea, __ inch, Crosswalk	Foot
Pavt Mrkg, Polyurea, __ inch, Stop Bar	Foot
Pavt Mrkg, Polyurea, __ inch, Cross Hatching, (color)	Foot
Pavt Mrkg, Polyurea, __ inch, (color)	Foot
Pavt Mrkg, Polyurea, (legend)	Each
Pavt Mrkg, Polyurea, (symbol)	Each

Pavt Mrkg, Modified Epoxy, (symbol)..... Each
Pavt Mrkg, Modified Epoxy, (legend) ..... Each
Pavt Mrkg, Modified Epoxy, __ inch, Crosswalk ..... Foot
Pavt Mrkg, Modified Epoxy, __ inch, Stop Bar..... Foot
Pavt Mrkg, Modified Epoxy, __ inch, Cross Hatching (color) ..... Foot
Pavt Mrkg, Modified Epoxy, __ inch, (color)..... Foot
Pavt Mrkg, Preformed Thermopl, (symbol) ..... Each
Pavt Mrkg, Preformed Thermopl, (legend)..... Each
Pavt Mrkg, Preformed Thermopl, __ inch, Crosswalk..... Foot
Pavt Mrkg, Preformed Thermopl, __ inch, Stop Bar ..... Foot
Pavt Mrkg, Preformed Thermopl, __ inch, Cross Hatching, (color)..... Foot
Pavt Mrkg, Preformed Thermopl, (route) Route Shield, __ foot by __ foot..... Each
Pavt Mrkg, (binder), __ inch, Shadow Liquid, Black..... Foot
Pavt Mrkg, Wet Reflective (binder), __ inch, (color)..... Foot
Pavt Mrkg, (binder), For On-Street Parking, __ inch, White..... Foot
Pavt Mrkg, (binder), __ inch, Solid Thru Guide Line, (color) ..... Foot
Pavt Mrkg, (binder), __ inch, Solid Turning Guide Line, (color) ..... Foot
Pavt Mrkg, (material), __ inch, Dotted Thru Guide Line, (color)..... Foot
Rem Curing Compound, for Spec Mrkg ..... Square Foot
Rem Curing Compound, for Longit Mrkg, __ inch..... Foot
Rem Spec Mrkg ..... Square Foot
Rem Raised Pavt Marker..... Each
Recessing Pavt Mrkg, Longit ..... Foot
Recessing Pavt Mrkg, Transv ..... Square Foot
Recessing Pavt Mrkg, Guide Line..... Foot
Scarification, for Polyurea Spec Mrkg ..... Square Foot
Scarification, for Modified Epoxy Spec Mrkg..... Square Foot
Witness, Log, $1,000.00 .....Dollar

A. **General.** The Engineer will not measure the skips in dashed lines. Unless otherwise included in the contract, the cost of traffic control and mobilization is included in the unit prices for other pavement marking placement pay items.

The cost of collecting and disposing of residue generated by the removal of pavement markings and curing compound is included in the unit prices for removal pay items.

The cost of wet reflective optics is included in the unit prices for the applicable pavement marking material.

The Department will not pay separately for the contact cement and adhesives for longitudinal lines, legends, symbols, crosswalks, cross hatching, or stop bars.

The Department will not pay for markings placed by equipment operated at speeds higher than the certified speed.

The Department will not assess liquidated damages if the 5 day waiting period for placing low temperature waterborne paint is in effect and the project is complete. The Department will not assess liquidated damages if the 14 day waiting period for regular dry paint is in effect and the project is complete.

Permanent pavement marking materials, temporary retroreflective pavement markings required for traffic control, removal of curing compound, removal of existing permanent pavement markings and scarification of pavement markings will be paid for separately using the appropriate pay items.

B. **Seasonal Limitations.** The Engineer will apply price adjustments as required by the contract only for the quantity of regular dry or low temperature waterborne substituted for waterborne paint and placed outside seasonal and temperature limitations. The adjustment applies only to projects that have completion dates after October 1, or have approved extensions of time without liquidated damages beyond October 1. Contractors who are in liquidated damages between October 2 and April 30 are not eligible for the price adjustment.

C. **Sprayable Thermoplastic.** When two applications of waterborne pavement markings are substituted for a single application of sprayable thermoplastic due to placing 10,000 feet or less (per color) per work day, the two applications of waterborne are paid for as a single application of sprayable thermoplastic under the sprayable thermoplastic pay items in the contract.

D. **Pavement Marking Removal.** The Engineer will measure the full removal of special markings based on the Pavement Marking Standard Plans. The Department will pay for partial removal of special markings based on the dimensions of the actual removal area. If full removal of pavement markings is required, the unit prices for **Rem Spec Mrkg** or **Pavt Mrkg, Longit, 6 inch or Less Width, Rem**, and **Pavt Mrkg, Longit, Greater than 6 inch Width, Rem** include the cost of the removal in accordance with subsection 812.04.N.

If the Contractor removes multiple layers of pavement marking materials, the Department will not pay separately for material removed beyond the first layer.

E. **Curing Compound Removal.** The unit price for **Rem Curing Compound** includes the cost of preparing new PCC for marking application by removing the curing compound. Measurement will be based on the Pavement Marking Standard Plans.

F. **Scarification.** The unit price for **Scarification, for Polyurea Spec Mrkg** and **Scarification, for Modified Epoxy Spec Mrkg** includes the cost of preparing the pavement surface via shot blasting or grinding with non-milling teeth for new pavement markings where pavement markings of the same type are existing. Measurement will be based on the Pavement Marking Standard Plans.

G. **Recessing.** The unit price for **Recessing Pavt Mrkg, Longit; Recessing Pavt Mrkg, Transv;** and **Recessing Pavt Mrkg, Guide Line** includes the cost of laying out the exact location

of the markings and all work as required to prepare (groove) the pavement surface for recessed pavement markings.

H. **Thermoplastic Rumble Strips.** The Engineer will measure each length of 6 inch by 3/8 inch thermoplastic material, both transverse and longitudinal, to determine the total length of **Pavt Mrkg, Thermopl, Rumble Strip** for payment.

I. **Guide Lines.** The unit price for **Pavt Mrkg, Ovly Cold Plastic, __ inch, Dotted Turning Guide Line, (color)** and **Pavt Mrkg, (material), __ inch, Dotted Thru Guide Line, (color)** will be for the footage of pavement marking material placed, not the full path of the turning guide line. Solid guide line pay items are for the full path of the guide line.

J. **Material Deficiency.** The Engineer will compute the quantity of pavement marking material and glass beads applied per unit of measurement at the end of each work day. The Engineer may include an applied length of less than 10 miles in the next day's measurement. The Engineer will determine the material usage based on field measurements and the required application rate specified in Table 811-1.

The Department will reduce the unit price for pavement marking material for material shortages in direct proportion to the deficient material quantity, up to 6 percent. If the daily deficiency of pavement marking material, or beads, is greater than 6 percent, the Department will consider the day's work unsatisfactory and will direct the Contractor to reapply the day's markings to the thickness required by the contract, at no additional cost to the Department.

K. **Raised Pavement Marker Removal.** The unit price for **Rem Raised Pavt Marker** includes the cost of the required patching material.

Section 812. TEMPORARY TRAFFIC CONTROL FOR CONSTRUCTION ZONE OPERATIONS

812.01. Description. This work consists of protecting, regulating, warning, guiding, and maintaining traffic through and around the Construction Influence Area (CIA). This work includes furnishing, placing, relocating, operating, maintaining and removing traffic control devices.

The Department will provide, install, and maintain traffic control devices outside the CIA.

812.02. Materials. Provide material in accordance with the following:

Temporary Traffic Signs 922
Channelizing Devices 922
Temporary Pavement Markings 922
Lighting Devices 922
Temporary Traffic Signals 922
Traffic Regulator Equipment 922
Portable Changeable Message Sign 922
Temporary Concrete Barrier 922
Temporary Attenuation 922
Conspicuity Tape 922

812.03. Construction.

A. **Contractor Notification.** Provide the traffic control certification letter to the Engineer. Notify the Engineer at least 72 hours, or as otherwise required by the contract, before starting work or installing initial traffic control devices on the project.

B. **Changes in Stage Construction Plans.** Provide written notice to the Engineer before making changes in stage construction. If the Department accepts the changes, the Engineer will provide written approval to the Contractor.

C. **Deficient Traffic Control Operations.**

1. **Traffic Control Quality and Compliance.** The following applies to all aspects of the traffic control plan and traffic control devices except the Type D lights on plastic drums which are covered elsewhere in the contract.

   a. **Traffic Control not Anticipated in Design.** If at any time during the project, including the time during the seasonal suspension, the Engineer documents that the traffic control requires improvements beyond the scope of the Traffic Control Plan, the Engineer will provide written instructions to the Contractor, the Contractor's appointed Safety Supervisor, and traffic control supplier what improvements are required. The Contractor must develop and submit to the Engineer for approval, a written implementation schedule

for improvements. If the schedule is not approved, or if the schedule is approved but is not followed, the Department will adjust the contract according to subsection 812.03.C.1.c.iii. If the implementation schedule is not followed, the Engineer will notify the Contractor, the Contractor's appointed Safety Supervisor, and traffic control supplier in writing that they are in violation of this subsection. The work of making traffic control improvements directed by the Engineer that are beyond the scope of the Traffic Control Plan will be paid for as extra work.

b. **As Designed Traffic Control.** If at any time during the project, including the time during the seasonal suspension, the Engineer documents that the traffic control is deficient, inadequate or improperly placed, the Engineer will provide written notification with instructions for corrective action to the Contractor, the Contractor's appointed Safety Supervisor, and traffic control supplier. Acknowledgement of the Engineer's notification must be provided within an hour by the Contractor. The Contractor will have 4 hours from the Engineer's notification to address the issue or provide a written implementation schedule for the Engineer's approval. If the schedule is not approved, or if the schedule is approved but is not followed, the Department will adjust the contract according to subsection 812.03.C.1.c.iii. The Contractor is required to supply evidence that the corrective action has taken place, if practical visual evidence should be provided. At this time the adjustments in subsection 812.03.C.1.c.iii will be paused until the Engineer will either provide written approval of satisfactory corrective action or notify the Contractor, the Contractor's appointed Safety Supervisor, and the traffic control supplier that the corrective action is not satisfactory, at this time the adjustments will continue as per subsection 812.03.C.1c.iii. The Engineer should provide details on the remaining items that are not satisfactorily addressed. If the implementation schedule is not followed, the Engineer will notify the Contractor, the Contractor's appointed Safety Supervisor, and traffic control supplier in writing that they are in violation of this subsection.

c. **Corrective Action.** The Engineer will give written notification to the Contractor, the Contractor's appointed safety supervisor, and traffic control supplier as identified above. Failure to make corrections within the timeframe required may result in the following actions by the Engineer:

    i. Stop work on the project until the Contractor completes corrective action.
    ii. Order corrective action by others in accordance with subsection 107.07, subsection 108.02, subsection 812.03.B, and in the interest of public safety.
    iii. A contract price adjustment will be made in the amount of $100 per hour for every hour or portion thereof the improvements or corrective action remains incomplete as described herein. If improvements or corrections have not been made to the satisfaction of the Department, the contract will be adjusted until the traffic control is acceptable.

D. **Placing Traffic Control Devices.** Provide and maintain traffic control devices meeting the requirements in the most current version of the ATSSA *Quality Guidelines for Work Zone Traffic Control Devices and Features*.

Apply and place traffic control devices within the CIA in accordance with the MMUTCD, as shown on the plans, or as directed in writing by the Engineer.

Do not place commercial or Contractor identification signs within the highway right-of-way.

Display only traffic control devices relevant to conditions. Cover, remove, store, modify, or move existing temporary or permanent signs with inapplicable legends. Do not place temporary signs not in use, with the sign face parallel to traffic.

Inspect traffic control devices daily to ensure devices are relevant, in place, positioned, aligned, and oriented as required. Record inspections and make the records available to the Engineer upon request. The Department may take possession of the inspection records at project completion.

Maintain lights on traffic control devices in working order at all times.

Remove temporary traffic control devices from the project if no longer required.

Temporary traffic control devices provided by the Contractor will remain the property of the Contractor.

1. **Temporary Signs.** Signs must not be fabricated with vertical seams. Horizontal seams are not to cross through the sign legend. Mount signs of 20 square feet or less on portable or ground driven sign supports. Mount larger signs on ground driven supports. Place ground driven sign systems as described in Standard Plan WZD-100 series, or use another NCHRP 350 or the AASHTO *Manual for Assessing Safety Hardware* (MASH) accepted design.

   Mount signs at a bottom height of at least 5 feet above the near edge of pavement and at least 5 feet above ground. If placing a sign behind a retaining wall, provide a bottom height of at least 5 feet above the top of the wall and provide a minimum height above the ground behind the wall to ensure visibility.

   If erecting signs behind a curb, or within 6 feet of a pedestrian walkway, mount signs at a bottom height of at least 7 feet above ground. If the sign is located in a closed section of a walkway the bottom height must be at least 5 feet.

   For ground driven signs, if a secondary sign is required, mount the secondary sign below the primary sign with a bottom height 1 foot less than the bottom height required.

For portable signs requiring a secondary sign, mount on separate supports, at the required bottom height. Mount the primary portable sign above the secondary sign on separate supports. The Engineer will allow portable sign clusters if the total area measures no greater than 20 square feet.

Erect signs with supports vertical and the legend or symbol horizontal. Signs must be plumb with a tolerance of no more than 2 inches over 4 feet.

The Department will allow the use flexible, roll-up signs only during daylight hours. The Department will not allow the use of mesh signs.

For shoulders with no barrier walls, if removing temporary signs on portable supports, remove the sign stands from the uprights. Lay the sign flat, off the shoulder, and place the uprights facing downstream from traffic. Remove support stands and ballasts from the shoulder. Do not place sign covers on temporary sign systems on portable supports located on shoulders with no barrier walls.

For shoulders with barrier walls, if removing temporary signs on portable supports, remove the sign stands from the uprights, and place against the barrier wall. Place the uprights facing downstream from traffic and place support stands and ballasts close to the barrier wall.

Cover temporary signs on portable supports that straddle barrier wall, required to remain on the project while not in use. Remove sign covers from the roadway, or store against the barrier wall, when not in use.

For locations with guardrail, if conditions require temporary removal of temporary signs on portable supports, remove the sign stands from the uprights. Lay the sign behind the guardrail, with the uprights pointing downstream from the traffic, and place the support stands and ballasts close to the guardrail. Do not store signs against cable barrier.

Do not obstruct or interfere with attenuation devices when storing temporarily removed temporary signs on portable supports.

a. **Type B, Temporary, Prismatic, Special.** Signs must meet the requirements for Sign, Type B, Temp, Prismatic, Furn and Oper as outlined in section 812.

   Ensure Type B, Temporary, Prismatic, Special signs are not fabricated with vertical seams. Horizontal seams are not to cross through the sign legend.

   Install Type B, Temporary, Prismatic, Special signs on driven sign supports, in accordance with subsections 812.03, 919.04 and section 912, unless otherwise indicated on the plans, proposal or approved by the Engineer.

b. **Concrete Barrier-Mounted Temporary Sign System**. Provide a sign system capable of being properly attached, as determined by the Engineer, to concrete barrier, temporary or permanent, with top width as narrow as 5 inches or as wide as 15 inches.

Ensure the sign system has the capacity to display a roll-up or rigid sign up to 48 inches wide by 60 inches high. Ensure the sign system and design meets all of the applicable requirements from subsections 812.03.D and 922.02.

Construct the sign system from materials that will not be susceptible to corrosion or deterioration due to the effects of weather, or road de-icing agents throughout the duration of installation.

Sign system must securely mount to the barrier section in a manner that displays the sign clearly above the barrier. Anchoring mechanisms must operate such that when engaged, they do not irreparably damage the barrier section.

Deploy the concrete barrier-mounted sign system in accordance with the manufacturer's recommendations, and the following requirements:

i. Install the sign system at locations shown on the plans or as directed by the Engineer such that the message displayed is easily visible to motorists and not obscured by or in conflict with other signage. Make adjustments to the position of the sign system as directed by the Engineer.

ii. Ensure any deformation or damage to a Department-owned concrete barrier section which occurred due to installation or use of this sign system is repaired as directed by the Engineer at the time of removal.

2. **Sign Covers.** For permanent signs, other than overhead signs and signs larger than 60 square feet, cover the entire front of the sign panel. Mount the sign coverings using Department-approved methods to avoid damaging the sign sheeting. Do not apply fastening devices or covers directly to the reflective sheeting. Use spacers that provide 2 inches of air space between the cover and the sign face to protect the sheeting from damage.

Install Type I sign covers on Type I signs shown in the contract, to obscure conflicting information. Submit shop drawings of the Type I sign covers to the Engineer, and obtain the Engineer's approval, before covering Type I signs on the project.

For temporary signs on fixed supports, cover the entire sign legend.

Do not use burlap or similar material to cover Department or Local Government owned signs. The Contractor may use approved soft covers on other temporary signs.

Do not use sign plaque overlays that alter part of the legend or symbol.

3. **Sign Supports.** Place and construct sign supports to resist swaying, turning, or displacement. Provide fixed sign posts in accordance with subsection 919.04, except the Engineer will allow painted or galvanized steel posts.

   Mount construction signs on portable sign support standards only if signs are to remain in place for 14 days or less, or as allowed by the Engineer if fixed supports are not possible.

   a. **Reflective Panel for temporary sign supports.** When used, match the sheeting of the reflective panel to the material type and background color of the sheeting of the sign mounted on the post, except for YIELD and DO NOT ENTER signs where the reflective strip will be red.

      The reflective strip must be at least 2 inches in width by 3 feet long.

      Attach the reflective strip to Polyvinyl Chloride (PVC) or 0.080 inches thick aluminum substrate. If aluminum is used on a u-channel post a backing plate will be required.

      Attach the sheeting to the post as recommended by the manufacturer, and approved by the Engineer. Install the sheeting as soon as the support post is placed in the ground or the sign is placed over median concrete barrier.

4. **Supplemental Weights.** Maintain traffic control devices upright and aligned during use. Use sandbags, or a Department-approved alternate as supplemental weights to achieve stability.

5. **Channelizing Devices.** Install the lead-in signing and lighted arrow before installing channelizing devices. Install channelizing devices in the direction of traffic flow. Remove channelizing devices in the opposite direction of traffic flow. The reflective sheeting for all channelizing devices within the project limits must be the same ASTM type for the life of the project. Do not mix drums and cones within a traffic channeling sequence. Where lane closures are already in place, use the same type of channelizing devices to extend the closures.

   The Engineer will allow the use of traffic cones only in the daytime. Ensure cones remain upright, in place, and do not interfere with traffic.

   When using plastic drums, stand the plastic drums upright and stabilize them with weight to prevent overturning. Do not mount signs on drums.

6. **42-inch Channelizing Devices.** Provide and install 42-inch tall, retro-reflective plastic channelizing devices as shown on the plans, or directed by the Engineer. Do not attach lights.

   a. The Department will allow the daytime use of 42-inch channelizing devices in taper and tangents for the following:

i. Capital Preventative Maintenance (CPM) projects, pavement marking, chip seal, microsurface, and crack-filling projects;
ii. Any projects where the use of plastic drums restricts proposed lane widths to less than 11 feet, including shy distance; or
iii. Work durations of 12 hours or less.

The devices must be placed such that spacing does not exceed the maximum values described in Table 812-1:

Table 812-1
Maximum Spacing for 42-inch Channelizing Devices

Work Zone Speed Limit	Taper	Tangent
< 45 mph	1.0 S	2.0 S
≥ 45 mph	50 feet	100 feet

Notes: S = Work Zone Speed Limit (mph)

Place the devices a maximum distance of 50 feet apart in tangent sections, and a maximum of 25 feet apart in tapers. These spacing requirements apply for all speed limits during nighttime operations.

b. **Temporary Tubular Markers.** Provide and install Tubular markers as shown on the plans. Bond the devices to the roadway surface in accordance with the manufacturer's recommendations, using either a thermosetting epoxy adhesive or a pad of flexible mastic adhesive. If a flexible mastic adhesive is used, ensure that both sides of the mastic pad are protected with pre-mask tape or release film.

Place tubular markers at not more than 100-foot spacing in tangent areas and not more than 50-foot spacing in tapers unless otherwise directed by the Engineer.

7. **Temporary Delineators.** Provide temporary delineators to delineate work zone shoulders that cannot support the use of plastic drums.

Install Temporary Delineators Panels or Temporary Flexible Delineators in accordance with the manufacturer's recommendations and as shown on Standard Plan WZD-126 series.

8. **Lighted Arrows.** If closing lanes, place a Type C lighted arrow on the shoulder at the beginning of the channelizing device taper. Place a shoulder closure taper in advance of the lighted arrows placed on the shoulders. Provide a minimum bottom height of at least 7 feet for Type C panels. For narrow or non-existent shoulders, place the lighted arrow panel behind the channelizing devices as near the beginning of the taper as physically possible. Place the lighted arrow panel level and visible to oncoming traffic.

Ensure the arrow remains clearly legible at distances from 2,500 feet to 200 feet, from all traffic lanes and roadway entrances. Do not place the lighted arrow on a horizontal or vertical curve that might interfere with this legibility requirement. The Engineer will verify the legibility distances on a sunny day and a clear night.

If the lighted arrow is in use, secure the tires on the ground with wheel chocks, or elevate the trailer with the bottom of the tires above the ground. If the lighted arrow is not in use, park the device in accordance with subsection 812.03.G.5. The lighted arrow board must not be in travel mode when stored within 30 feet of the traffic lanes.

If the contract includes standby Type C lighted arrows as a pay item, make a lighted arrow available for immediate use as a replacement unit. Locate the standby lighted arrow at the project or at a location approved by the Engineer.

9. **Type III Barricade.** Use Type III barricades to accentuate delineation or warning, and for total or partial road closures. For complete road closures, extend the barricades, with no gaps, across the roadway and shoulders, or from curb to curb.

   Light Type III barricades with two, Type C or Type D warning lights, fastened to the uprights above the top rail, provided these warning lights each weigh 3.3 pounds or less. Construction signs placed behind barricades will be located on independent supports. Place the bottom of the signs above the top rail of the barricade. Stripes on the retro-reflective sheeting must be placed in accordance with MMUTCD 2009 edition figure 6F-7. Place sheeting on both sides of Type III barricades if traffic, including local traffic, approaches the barricade from both directions.

   Do not place Type III barricades parallel to approaching traffic.

   If through traffic is prohibited, use Type III barricades, including the required construction signs and lights. Arrange barricades and erect signs to allow the passage of local traffic and discourage through traffic. Install a sign with the required legend concerning permissible use by local traffic only.

10. **Temporary Concrete Barrier.** Place temporary concrete barriers before diverting traffic, or beginning work. Provide clean barriers, in sound structural condition. If placing temporary concrete barrier sections on the pavement, clean the pavement of any material that would reduce the friction between the barrier section and the underlying pavement. During barrier installation, protect traffic by using or installing standard warning and channelizing devices. After placing end treatment, place barriers in the direction of the flow of traffic. Remove barriers in the direction opposite to traffic flow.

    Link sections together to fully engage the connection between sections. Maintain the barrier with end-attachments engaged and within 2 inches of the alignment shown on the plans.

Install Type B high intensity lights on temporary concrete barriers in accordance with Standard Plan R-126 series.

If incomplete concrete barrier installations or removals expose barrier blunt ends to traffic inside the clear zone for more than 8 hours, make these ends crashworthy in accordance with Standard Plan R-126 series, or as directed by the Engineer.

Install barrier reflector markers on the temporary concrete barrier. Remove dirt and other material that could diminish adhesion from the barrier before installing the reflectors. Install reflectors using the manufacturer's recommended adhesive and installation procedures. Install the reflector near the center of the barrier section and at a height of 18 inches ±1 inch from the bottom of the barrier section to the top of the reflector. Provide a maximum longitudinal spacing of 20 feet. Ensure the color of the reflector matches the color of the edgeline pavement marking in that location.

If relocating or adjusting temporary concrete barrier, leave the existing reflector markers on concrete barrier intact if they are undamaged and the color is as required. If the reflector color is not as required, replace with the correct color reflector. Clean barrier reflector markers before placing the barrier back in operation.

Replace temporary concrete barrier sections structurally damaged during handling or by traffic. Repair non-structural damage that affects the performance of the section, using Department-approved concrete or mortar mix, if directed by the Engineer.

Remove and replace damaged barrier reflector markers. Position replacement markers directly in front of the damaged marker.

a. **Glare Screen Temporary**. Must be of a design and shape so that, during hours of darkness, a driver, traveling at the posted speed limit, in the inside travel lane cannot view the headlights of other vehicles traveling, at the posted speed limit, in the opposing inside travel lane.

   Each completed section of temporary glare screen is to consist of a continuous base fitted with flexible, vertical blades spaced such that the headlight glare of opposing traffic is obscured. The length of a complete section of Glare Screen, Temp is defined as being equal to the length of the temporary glare screen base with flexible blades attached as fabricated by the temporary glare screen manufacturer. Modification of the temporary glare screen blades, mounting hardware and/or the temporary glare screen base, including cutting or drilling of additional holes in the base or blades is not allowed. The overall run of Glare Screen, Temp must be such that the entire length of temporary or permanent barrier, specified on the plans or proposal, is covered. The distance between the temporary glare screen blades, at the point of temporary barrier segment connections or at the temporary glare screen base joints, must not be greater than the nominal blade

to blade distance. Intermixing of different brands or types of temporary glare screen and/or components, within the same run, is not allowed.

Install the temporary glare screen in complete sections along the longitudinal centerline of the temporary or permanent barrier, identified on the plans or in the proposal, with no gaps between the bottom of the temporary glare screen base and the top of the barrier.

Attach the temporary glare screen using installation procedures and hardware specified by the manufacturer. A minimum of three anchoring studs are required for each section of temporary glare screen. Install the mounting hardware for the temporary glare screen in clean holes drilled into the top of the temporary or permanent barrier. Tighten all hardware and connections according to the manufacturer's specifications.

Adjust the temporary glare screen when temporary barrier on which it is installed is adjusted.

Relocate the temporary glare screen, as required, to locations identified on the plans or proposal for stage construction.

Omit the temporary glare screen, for a distance of 10 feet (maximum) approaching the face of a Type B high intensity light when a Type B high intensity light, required per Standard Plan R-126 Series, falls within a run of temporary glare screen.

Replace the entire section of temporary glare screen when the number of damaged temporary glare screen blades, on a section of temporary glare screen, is equal to or greater than one-third the number of blades attached to that individual temporary glare screen base section.

Replace damaged temporary glare screen section(s) within 10 calendar days upon written notification by the Engineer.

i. **Temporary Glare Screen Base.** Provide temporary glare screen bases that are nonwarping, durable, impact resistant, non-metallic, polymeric material. These bases must be able to withstand, at minimum, the same number of impacts as the temporary glare screen blades without deforming, warping, twisting, cracking or splintering. Provide bases with a minimum of three mounting holes pre-drilled by the manufacturer of the temporary glare screen. The bases must be in sound condition and be free of checks, cracks, splinters, fins, tears or warps at the time of initial installation and when the temporary glare screen is being relocated or adjusted.

ii. **Temporary Glare Screen Blades.** Provide blades that are green or gray in color. Attach each blade to a mounting bracket. Temporary glare screen blades and mounting brackets are to be supplied by the manufacturer of the temporary glare screen. The blade height, measured from the top of the base, must be 24 inches. The

blade width must be constant from the top to bottom of the blade. No gaps will be allowed between the bottom of the blade and the top of the base. Attach the mounting bracket, with the blade attached, flush to the base at a 22 degree angle +2 degrees, rotated on the vertical axis, with the trailing edge of the blade being downstream from the flow of traffic. Attach the blades to the base according to the manufacturer's specifications. The blades must be flexible but have sufficient rigidity so as to remain upright in the wind turbulence generated by traffic traveling at the posted speed. The blades must be able to withstand impacts without deforming, warping, twisting, cracking or splintering. The blades must be in sound condition and be free of checks, cracks, splinters, fins, tears or warps and be securely fastened to the base at the time of initial installation of the temporary glare screen and when the temporary glare screen is relocated or adjusted. The blades must be fade resistant and free of retro reflective sheeting or reflective surfaces.

The blades, after being impacted, must be able to recover to within 15 degrees of their original orientation (vertical and horizontal).

11. **Temporary Concrete Barrier Ending.** Place the temporary concrete barrier ending in accordance with Standard Plan R-126 series and this subsection. Repair or replace damage to temporary concrete barrier endings. Temporary barrier endings subject to approach traffic and not terminated behind guardrail must be attenuated or, if applicable shielded with a temporary concrete barrier sloped end section.

    a. **Detail 1.** Place the sloped temporary concrete barrier ending section as required for temporary concrete barrier placement.

    b. **Detail 2.** Install impact attenuation systems in accordance with the manufacturer's specifications. Do not use a sloped end section in combination with a Detail 2 ending.

    Install sand module attenuator components as shown on Standard Plan WZD-175 series.

    Install impact attenuation devices as shown on the plans, as directed by the Engineer, or both.

    Place attenuation systems on concrete, HMA, or compacted aggregate surface in accordance with the manufacturer's specifications. If the required base does not exist, construct the base pad, foundation, anchor block, and backup unit in accordance with the manufacturer's specifications. Install the unit and connect to the backup and the front anchoring system as required.

    Provide and install an object marker as shown on Standard Plan WZD-150 series. Do not attach unapproved appurtenances to the attenuator.

Ensure an individual trained by the manufacturer in the installation of impact attenuator systems, is present during attenuator installation. The Department will not provide this individual.

Install the following in accordance with the manufacturer's specifications:

i. Attenuator transition assemblies;
ii. Transition panels;
iii. End panels; and
iv. Other miscellaneous accessories required for connecting the attenuator to concrete barriers.

Provide written certification to the Engineer verifying attenuator installation as shown on the plans, and in accordance with the manufacturer's specifications.

If using temporary anchors in new or existing pavement, remove anchors to at least 1 inch below final pavement grade and backfill with an epoxy material approved by the Engineer. For temporary anchors in temporary pavement, remove temporary anchors flush with the paved surface.

If concrete pads contain steel reinforcement, use equipment capable of drilling or coring through steel reinforcement to obtain the required depth for the concrete anchors.

Place cable anchorages and backups to meet the required attenuator alignment.

If the Engineer directs the replacement, repair, or realignment of attenuators, respond within 24 hours. If the Contractor fails to respond, or fails to complete repair work within 48 hours after notification, the Engineer may assign the work to others at the Contractor's expense.

c. **Detail 3.** Ensure the temporary concrete barrier sections that extend past, and make contact with existing guardrail, are standard, full height sections. Do not use a sloped end section in combination with a Detail 3 ending.

d. **Detail 4.** Install Detail 4 endings in accordance with subsection 812.03.D.11.b and this subsection.

Refer to Standard Plan R-126 series, Detail 4 to determine the offset between the toe of the existing concrete barrier wall and the attenuator.

Do not use a sloped end section in combination with a Detail 4 ending.

e. **Detail 5.** Install Detail 5 endings in accordance with subsection 812.03.D.11.b and this subsection.

Do not use a sloped end section in combination with a Detail 5 ending.

12. **Temporary Pavement Marking.** The requirements for placing temporary pavement markings differ depending on the situation involved.

    Place 4-foot dashes spaced 50 feet apart, from center-to-center of the markings, when temporary pavement markings are placed in the configuration of permanent markings and traffic is driving in its normal lanes. However, place solid markings, not 4-foot dashes, to temporarily mark a solid edgeline.

    When temporary pavement markings are used to facilitate traffic shifts or when used to delineate traffic in other than its normal lanes, or both, place markings in the same configuration as permanent markings in accordance with section 811. Place solid lines where solid line permanent markings are called for. Place skip or dotted lines at the normal length and with the normal gap.

    a. **Temporary Pavement Marking – Wet Reflective Type R.** Use temporary wet reflective pavement marking Type R (removable tape) when temporary pavement markings must be placed on finished pavements and are not in the exact location as future permanent markings or at the discretion of the Engineer when temporary markings must be removed during the life of a project.

       Prior to installation, air blow or brush the pavement surface to remove surface dust and dirt. Remove curing compound from new concrete surfaces before applying Type R Tape. Removal of curing compound is paid per section 811.04.

       Place wet reflective Type R tape when it is used as a 4-foot dash or full-length skip line as defined in the contract to temporarily mark finished pavement prior to the placement of permanent markings in accordance with the manufacturer's specifications for existing temperature and pavement condition. Offset the dash or skip line 1 foot from the permanent marking so that the permanent markings can be placed prior to the removal of the 4-foot dashes or full-length skip lines. Do not use 4-foot dashes or full-length skip lines to temporarily mark a solid edge line. Replace damaged or missing tape of more than 2 consecutive skip lines. Replace tape that fails due to improper installation within 24 hours after notification by the Engineer. Failure to replace the tape within the 24-hour time period may result in a contract price adjustment as described in 812.03.C.

       i. Between April 15 and November 1, place wet reflective Type R tape not used as a skip line in accordance with the manufacturer's specifications for existing temperature and pavement condition. Replace wet reflective Type R tape of more than 50 cumulative feet that fails within 24 hours after notification by the Engineer. Failure to replace the tape within the 24-hour time period may result in a contract price adjustment as described in 812.03.C.

ii. From November 2 to December 1 and March 15 to April 14, place wet reflective Type R tape for all temporary shifts and tapers when pavement surfaces are dry and air temperatures are 40° Fahrenheit (F) and rising. Ensure all wet reflective Type R tape placed during these times is placed during approved daytime hours negotiated between the Engineer and the Contractor or daytime hours required in the contract.

Do not place wet reflective Type R tape within 24 hours of predicted precipitation, or 24 hours after any precipitation. The Contractor will be paid to repair locations that fail during these times unless the Engineer determines the failure is due to improper surface preparation, or failure to follow these requirements. Repairs, if required, will be paid for at a negotiated price between the Engineer and the Contractor for the associated work.

iii. Use temporary wet reflective pavement marking Type NR paint, instead of wet reflective Type R tape, for all tapers and shifts when ambient air temperature is less than 40°F. To remove the wet reflective Type NR paint, use the least abrasive technique as directed by the Engineer to minimize scarring. If the approved pavement marking removal pay item is not part of the contract, the cost of the removal of Type NR pavement markings will be negotiated between the Engineer and the Contractor.

iv. Wet reflective Type R tape is not to be placed between December 2 and March 14.

b. **Temporary Pavement Marking – Wet Reflective Type NR.** Place Type NR tape and Type NR paint in accordance with section 811.

i. **Wet Reflective Type NR Paint**. Use temporary pavement marking Wet Reflective Type NR paint when temporary pavement markings must be placed on pavement to be removed or replaced during construction. It also must be used when temporary markings line up exactly with the placement of permanent markings and may be grooved out prior to recessing permanent markings. The temporary pavement marking material must be compatible with the material specified for the permanent markings if permanent markings are to be placed on top of temporary markings.

Place the binder at a thickness of 18 mils while driving at a maximum rate of 8 miles per hour. Drop wet reflective optics and glass beads at a rate recommended by the manufacturer for an approved wet reflective system. Ensure the proposed wet reflective optic is approved by the Engineer.

Place Wet Reflective Type NR paint, used as a 4-foot dash or full-length skip line as defined in the contract, to temporarily mark finished pavement prior to the placement of permanent markings, in the exact location as the permanent marking such that its removal is not necessary. Only use Wet Reflective Type NR paint markings compatible with the permanent pavement marking material specified on the project as

a 4-foot dash or full-length skip line unless the permanent markings are to be recessed, whereas the temporary Type NR paint line will be removed during the recessing process. Do not use 4-foot dashes or full-length skip lines to temporarily mark a solid edge line.

ii. **Wet Reflective Type NR Tape**. Use temporary pavement marking Wet Reflective Type NR Tape as a 4-foot dash or full-length skip line as defined in the contract to temporarily mark a white skip line or yellow centerline on base or leveling course pavement. Wet Reflective Type NR tape must not be used to temporarily mark a solid edge line. Wet Reflective Type NR tape is not to be used on the wearing course of asphalt or on existing pavement.

c. **Temporary Special Pavement Markings (Transverse, Legend, and Symbol).** Use Type R temporary wet reflective special markings if the markings applied during the Project require removal during the life of the Contract. Use Type NR temporary special markings if the markings applied during the Project can remain in place or are located on pavement to be removed or replaced during construction, or if the manufacturer temperature requirements for temporary tape cannot be met.

Install temporary special pavement markings in accordance with the Contract and section 811.

i. **Wet Reflective Type NR Paint**. Provide Type NR temporary special markings as paint reflectorized with glass beads, from the Qualified Products List. Use pavement marking Type NR temporary special markings when temporary pavement markings must be placed between November 2 and April 14, or if the removal of the temporary marking will occur after December 1.

ii. **Wet Reflective, Type R, Tape.** Provide Type R temporary special markings from the Qualified Products List. Apply and remove tape in accordance with the manufacturer's instructions. The tape must remain flexible and conform to the texture of the pavement surface during use. All curved arrows, curved legends, and curved symbols must be precut or fabricated prior to being placed in the field.

Between April 15 and November 1, place Type R wet reflective tape in accordance with the manufacturer's specifications for existing temperature and pavement conditions.

Utilizing 4 or 6 inch lines to create a symbol or stop bar is prohibited. Ensure the symbol is fabricated prior to being placed in the field and the stop bar is made out of 12 inch material.

d. **Temporary Raised Pavement Markings.** Select temporary raised pavement markers (TRPM) from the Qualified Products List and install per the manufacturer's specifications.

Remove TRPM before applying subsequent layers of HMA or if they are no longer in the proper configuration for the associated pavement markings in use.

13. **Pavement Marking Cover.** Provide and install temporary pavement marking cover, Type R, preformed black tape, to cover existing pavement markings, as shown on the plans or directed by the Engineer. Use black pavement marking cover on hot mix asphalt (HMA) pavement and portland cement concrete (PCC) pavement, in accordance with manufacturer's specifications. Do not use heat, solvents, or other additional adhesive to install pavement marking cover.

    Prior to installing the pavement marking cover, air blow or brush the pavement surface to remove surface dust and dirt.

    Ensure the tape completely masks the existing marking.

    Replace pavement marking covers that come loose, or that do not meet contract requirements, as directed by the Engineer, and at no additional cost to the Department.

    Apply and tamp the marking cover in accordance with the manufacturer's recommendations.

    Pavement Marking Cover is prohibited from use between November 1 and April 14 due to temperature and weather limitations as defined by manufacturer's recommendations.

14. **Temporary Rumble Strips (Orange).** Do not apply the rumble strips unless the pavement surface temperature is 40 degrees F and rising, and dry. Do not use artificial heat. Clean all foreign and contaminating material from the surface of the pavement prior to application of the rumble strips.

    The Engineer will consider the pavement to be dry if the underside of small sheet of black plastic taped to the pavement has no visible condensation on the underside after 15 minutes.

    a. **Temporary Rumble Strips (Orange) in Advance of a Stop Condition**

    Place as shown in Figure 812-1:

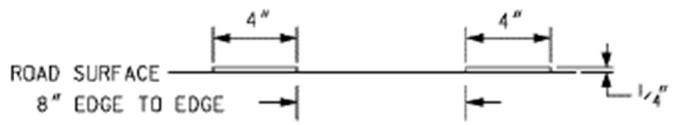

PROFILE VIEW

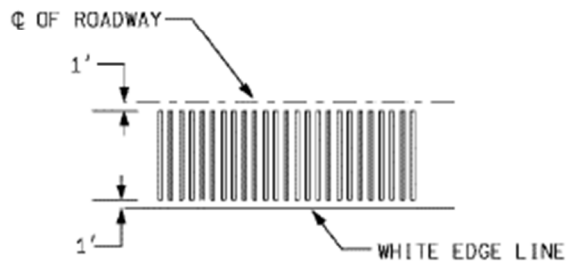

PLAN VIEW

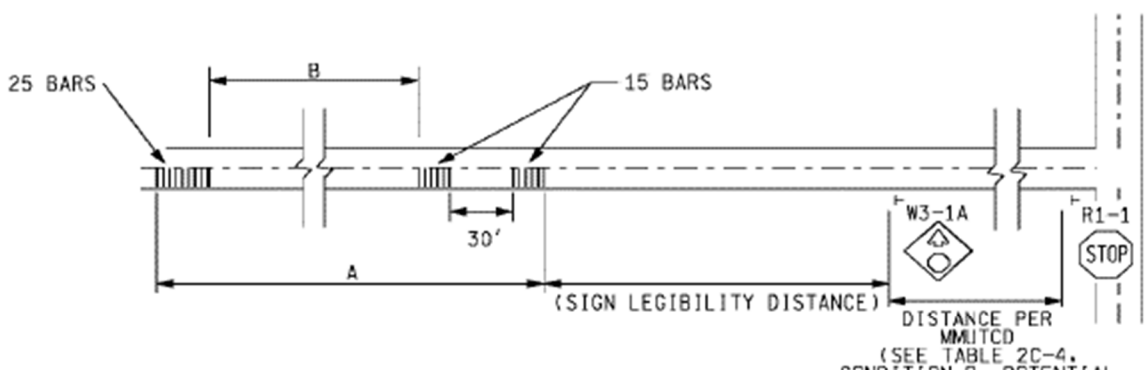

POSTED SPEED	DISTANCES	
	A	B
45 MPH	200 FT	115 FT
50 MPH	230 FT	145 FT
55 MPH	245 FT	160 FT

LOCATION

NOTE: DISTANCES GIVEN ARE MINIMUM VALUES

Figure 812-1: Temporary Rumble Strips for Use in Advance of a Stop

b. **Temporary Rumble Strips (Orange) in Advance of a Work Zone**

Place 3 sets of 9 rumble strips in advance of a lane closure in each direction of the roadway for a total of 6 sets of 9 rumble strips. Ensure that the rumble strips cover the entire width of the roadway from edge of metal to edge of metal. Place the temporary rumble strips as follows:

i. Apply one set of 9 rumble strips, each spaced 1.5 feet apart from edge to edge, placed approximately 700 feet upstream of the beginning of the taper;

ii. Apply one set of 9 rumble strips, each spaced 5 feet apart from edge to edge, placed approximately 1400 feet upstream of the beginning of the taper; and
iii. Apply one set of 9 rumble strips, each spaced 10 feet apart from edge to edge, placed approximately 2800 feet upstream of the beginning of the taper.

The completed temporary rumble strip consists of one layer of the 0.25 inch by 4 inch material.

Apply the primer to the surface of the pavement only if recommended by the manufacturer. Place the pre-adhesive surface of the rumble strip on the primer or directly on the pavement surface, as recommended by the manufacturer. Seat the rumble strips with a minimum of three passes of a 200 pound weighted roller.

If the temporary rumble strips lose their adhesion to the pavement during the life of the project, replace or re-adhere them, as directed by the Engineer.

Upon completion of the project, or as directed by the Engineer, entirely remove the temporary rumble strips using a method that will not permanently damage the pavement surface

Provide temporary rumble strips that are composed of a polymer with pre-applied adhesive, orange in color and, a tensile strength of 250 PSI. Provide primer in accordance with the manufacturer's recommendations.

15. **Temporary Traffic Signals.** At least 14 days before starting construction on temporary traffic signals, contact the utility company and apply for temporary electric service. Provide electric service on the project and arrange for electric service removal when the project is complete.

Ground equipment with a resistance no greater than 10 ohms.

Perform work on signals in accordance with the contract, and to the requirements of the National Electrical Safety Code, the NEC, and the NEMA TS-5 for those items not identified in the contract.

Use signal lamps with brass bases in accordance with ITE Standards.

Use the type of traffic signal controller shown on the plans. Before using a traffic signal controller other than as shown on the plans, obtain the Engineer's approval. Provide the Engineer-approved, alternate controller at no additional cost to the Department.

Provide, install, operate, inspect, maintain, disconnect, cover, and remove temporary traffic signals, and the required equipment and materials. Provide electric service equipment and the required wiring between the secondary service terminal, provided by the utility company, and the signal controller.

Place hoods over, or cover, signals until they are placed in service.

Install the required traffic signal timing for operating the temporary traffic signals.

Adjust traffic signal timing, as directed by the Engineer, to ensure the temporary traffic signal is operational. If the Engineer requires traffic signal timing changes, the Engineer will provide the locations and a signal-timing permit, for implementing the approved timing changes.

Maintain traffic signals installed or modified for construction for the duration of the project to ensure the signals perform as required. Disconnect and cover the signals when closing the roadway to traffic, as directed by the Engineer. Remove the temporary signals at the end of the contract.

Test equipment in operation, as a complete installation. Include sequence of operation, continuity, voltage, and ground resistance readings. Provide results of these tests to the Engineer before placing the installation into service.

Notify the Engineer before placing traffic signal installations in service.

The Department will not allow the substitution of a portable traffic signal system where temporary traffic signals are required.

16. **Temporary Portable Traffic Signal (PTS) System.** Provide the temporary portable traffic signal (PTS) system as shown on the plans. Each PTS system consists of a minimum of two trailer-mounted, solar powered portable traffic signals with battery back-up.

    Provide, install, program, and activate the signal system at the initial location. Provide hardwire or radio communication. Operate, inspect, maintain, clean, relocate, reactivate, reprogram, and remove the PTS system from the project.

    Check the PTS system for required operation at 12 hour intervals when in use on the project. If PTS system failure occurs, provide traffic regulators to control traffic until the PTS system is operational. If the PTS system fails a second time within 30 calendar days of the first failure, remove the PTS system from the project and provide traffic regulators until the replacement PTS system is installed, activated, and operating as required.

    The Contractor is responsible for repair or replacement of the PTS system.

    PTS trailers must be located on the shoulder, outside the travel lane. After positioning the trailer, rest the tires on the ground with wheel chocks or elevate the trailer, with the bottom of the tires above the ground. Delineate each trailer using three plastic drums or 42 inch channelizing devices.

When work operations are suspended and traffic lanes are to be opened for less than 72 hours, the temporary signal may remain in place in flash mode. Remove the temporary signal from the roadway if it will be non-functional for longer than 72 hours.

If existing guardrail prevents a trailer from sitting completely on the shoulder, place PTS system in accordance with the following.

a. **Open Lane Approach Side.** On the open lane approach side, if existing guardrail prevents the trailer from sitting completely on the shoulder, complete the following:

   i. Remove one panel of guardrail at the required PTS trailer location, at least 100 feet from the end of the temporary concrete barrier;
   ii. Slide the PTS trailer into the gap so the left tire is on the shoulder and the signal does not encroach into the open lane;
   iii. Place a terminal end shoe, in accordance with Standard Plan R-66 series, and of appropriate type based on existing guardrail, on both blunt guardrail ends; and
   iv. After removing trailers, restore the guardrail to the original condition in accordance with section 807.

b. **Closed Lane Approach Side.** On the closed lane approach side if existing guardrail prevents the trailer from sitting completely on the shoulder, complete the following:

   i. Remove one extra guardrail panel where the temporary concrete barrier runs through the guardrail;
   ii. Slide the PTS trailer into the extra opening in front of the temporary concrete barrier where it runs through the guardrail so the left tire is on the shoulder and the signal does not encroach into the open lane;
   iii. After removing trailers, restore the guardrail to the original condition in accordance with section 807; and
   iv. No extruder ending is required on the closed lane approach side.

17. **Portable Changeable Message Signs.** Portable changeable message signs (PCMS) include the following 2 types of devices (each paid for separately):

NTCIP-Compliant Portable Changeable Message Sign. A National Transportation Communications for ITS Protocol (NTCIP) compliant PCMS. The NTCIP PCMS will be capable of communication via a cellular network with software provided and installed on a State owned computer, and will include automated PCMS Global Positioning System (GPS) coordinate/location information as noted.

Portable Changeable Message Sign. A non-NTCIP compliant PCMS meets all requirements outlined herein, except those that are noted to apply only to NTCIP compliant PCMS.

a. **Messaging.** The Department will allow use of PCMS for either advance time notification for future events including closures and planned maintenance work or information including detours or alternative routes; incident management; construction zone backups; or similar conditions.

   Do not use generic, non-emergency safety messages. If power to the PCMS is lost or in the event of a malfunction, default to one of the following: a screen with an asterisk in each corner, remove from the clear zone, or a default message approved by the Engineer. Ensure message sequences consist of no greater than two phases with at least 2 second display time for each message, and the sum of the display time for both phases should be a maximum of 8 seconds.

   Do not use PCMS for the following:

   i. Replacing MMUTCD required static signing or pavement markings;
   ii. Replacing a lighted arrow;
   iii. Advance notice of new traffic signals or signs;
   iv. Advertising; or
   v. Any message that scrolls or moves across the display.

b. **Technical Assistance.** Provide training and support for the PCMS and control software via telephone, e-mail, and on-site technical assistance as needed. Assistance may include, but is not limited to, training, bug fixes, and correction of installation problems.

c. **Warranty.** Warranty that the PCMS will be serviced and fully operational during the life of the related project, as defined in subsection 812.03.C.

d. **Security.** Ensure the PCMS is secure, and complies with the following:

   i. Create unique usernames and passwords (not defaults) for access to the PCMS local controls;
   ii. Remove all literature (manuals, instructions, etc.) from the PCMS controller enclosure;
   iii. Use a padlock, keyed lock, etc to prevent access to the controller enclosure; and
   iv. Provide the Engineer up to 3 keys, or the lock combination, as well as the usernames and passwords.

   MDOT may, at any time, inspect PCMS boards that are on site to verify that these security measures are being followed.

e. **Installation on the Roadway.** Delineate a deployed PCMS using three plastic drums or three 42 inch channelizing devices. The devices used for delineation will be paid for separately using the appropriate pay items.

If the PCMS is in use, rest the tires on the ground with wheel chocks or elevate the trailer, with the tires off the ground. If a PCMS is not needed, turn it off and remove it from the clear zone in accordance with subsection 812.03.G.5.

All equipment, equipment service and any appurtenances to the PCMS are the full responsibility of the Contractor.

In addition to the above-listed requirements, an NTCIP-compliant PCMS must also meet the following:

a. **Submittal of Documentation.** When installing an NTCIP-compliant PCMS on a project, submit the following documentation to the Engineer:

   i. Product data for the PCMS and control software. Within 30 days of contract award or 14 days prior to deployment of PCMS, the Contractor must provide to the Engineer or their representative a list of PCMS that will be utilized on the project. Information required includes, but is not limited to; PCMS and GPS equipment make, model number, communication settings, Internet Protocol (IP) addresses, etc. The Engineer will provide an electronic version of the format and information required for integration. Upon deployment of said devices at any time prior to final acceptance of the project, the Contractor must inform the Engineer in writing of the specific PCMS device that has been placed in the field in active service or pending active service;
   ii. An electronic version of the user manuals for the PCMS, GPS equipment and control software; and
   iii. Training materials for the PCMS, GPS equipment and control software to be distributed during training.

b. **Training.** Provide at a minimum, one classroom style training session on PCMS operator interface software for NTCIP PCMS, and field equipment, including but not limited to, posting and removal of messages, diagnosing field equipment malfunctions including messaging and communications errors. All training schedules, syllabus and materials to be supplied by the Contractor and approved by the Engineer prior to delivery of training.

c. **Messaging.** MDOT reserves the right to take full messaging control of any PCMS at any time throughout the duration of the project. This includes posting any message determined to be appropriate by MDOT, utilizing the Contractor supplied software.

d. **Technical Assistance.** Provide training and support for the PCMS and control software via telephone, e-mail, and on-site technical assistance as needed. Assistance may include, but is not limited to, additional training, bug fixes, correction of installation problems, and correction of communication errors.

e. **Preconstruction Test Requirements.** Develop a detailed test plan for the PCMS, GPS equipment and control software, and make revisions as needed until it is approved by the Engineer. This may include, but is not necessarily limited to:

i. Tests for defects in the PCMS, such as leaks, faulty wiring, faulty display modules, faulty batteries, firmware bugs, etc; and
ii. Tests that demonstrate properly functioning communications between the PCMS, GPS equipment and the control software. The test procedure should demonstrate successful control of the PCMS from the location where the software has been installed.

Conduct all testing in the presence of the Engineer or designated representative. Any problems must be fixed and testing repeated until all elements of the PCMS, GPS equipment and control software are accepted prior to the start of construction. Payment will not be made prior to a successful accepted test.

E. **Sign Removal (Permanent Signs).**

1. **Department-owned Permanent Signs.** Remove Department-owned permanent signs and supports as necessary to prevent damage. Remove, handle, store, and reinstall the signs in accordance with Department and manufacturer's requirements. Store the permanent signs outside the work area at a site within the CIA, as directed by the Engineer. Reinstall Department-owned permanent signs and supports within one day of completing the work, in accordance with section 810, unless otherwise directed by the Engineer.

   Replace signs, supports, or foundations, damaged by Contractor operations at no additional cost to the Department.

2. **Permanent Signs Owned by Local Agencies.** Remove locally owned signs and supports before starting work in the area. Remove, handle, and store signs in accordance with the manufacturer's requirements. Store the permanent signs outside the work area within the CIA, as directed by the Engineer. The local agency that owns the sign is responsible for sign and support replacement and related costs.

3. **Logo Signs or Tourist Oriented Directional Signs.** Date stickers on the back of the signs identify Logo Signs and Tourist Oriented Directional Signs. Contact Michigan Logos, Inc. at (888) 645-6476 to arrange for removal, storage, and reinstallation of Logo Signs or Tourist Oriented Directional Signs within the CIA. Provide Michigan Logos, Inc. with at least 14 days notice.

F. **Pavement Marking Removal.** Remove pavement markings that conflict with proposed temporary traffic markings before making any changes in the traffic pattern. Place temporary pavement markings when pavement markings are removed or obscured for more than 24 hours before a change in the traffic pattern. Wet Reflective Type R Tape and/or Wet Reflective Type NR Paint must be placed according to subsection 812.03.D.12 before the close of the work day.

Do not use paint or bituminous bond coat to cover existing and inappropriate pavement markings. The Contractor may use a Type R temporary pavement marking cover, per subsection 812.03.D.13 when authorized by the Engineer. Remove pavement markings in a manner that minimizes damage as possible to the surface texture of the pavement and by methods approved by the Engineer. Methods and equipment that may provide acceptable results are: shot blasting; water blasting; mechanical devices such as grinders, scarifiers, and wire brushes.

1. **Longitudinal Removal of Greater than 5,000 Feet of Pavement Markings per Stage.** Remove pavement markings using self-propelled truck mounted removal equipment. The removal truck must be capable of eliminating all airborne dust while operating and be capable of continuously vacuuming up the removal debris. If the debris generated during the removal process is greater than the vacuuming capability of the removal truck, a self-propelled sweeper operating immediately behind the removal truck is required such that all removal debris is immediately cleaned up.

    a. **Asphalt Surfaces.** Use any Engineer approved type of self-propelled truck mounted removal equipment except water blasting, provided that the equipment is capable of continually vacuuming the removal debris.

    b. **Concrete Surfaces to be Removed During Construction.** Use any Engineer approved type of self-propelled truck mounted removal equipment provided that the equipment is capable of continually vacuuming the removal debris.

    c. **Concrete Surfaces to Remain in Place.** Use an Engineer approved self-propelled truck mounted water blaster to minimize the scarring of the concrete surface. Use equipment capable of continually vacuuming the removal debris as approved by the Engineer.

2. **Longitudinal Removal of Less than 5,000 Feet per Stage of Pavement Markings and Removal of Special Markings.** Obtain the Engineer's approval for one of the following removal methods and minimize damage to the surface texture of the pavement during removal.

    Use one or more of the following removal methods:

    a. Sandblasting using air or water;
    b. Shot blasting;
    c. High-pressure water;
    d. Steam or superheated water; or
    e. Mechanical devices such as grinders, sanders, scrapers, scarifiers, and wire brushes.

Remove pavement markings such that all removal debris is cleaned up as the operation progresses. Other than for the removal of turning guide lines, the removal equipment must be capable of eliminating the airborne dust while operating and be capable of continuously vacuuming up the removal debris. If the debris generated during the removal process is greater

than the vacuuming capability of the removal equipment, all remaining debris must be immediately swept up.

G. **Maintaining Traffic Along Project.** Maintain traffic along the project in a safe and orderly manner. Maintain pedestrian mobility within the CIA, as required by the contract. If access cannot be accommodated, provide temporary modifications or a clearly marked detour.

1. **Traffic Maintained by Part-Width Intersection Construction.** If part-width construction is required, construct the new pavement on half an intersection at a time. Maintain through traffic on the remaining half intersection and shoulders. The contract may require temporary widening and surfacing of the shoulders.

2. **Access Provisions for Pedestrians and Local Traffic.** Use temporary roadways, culverts, railroad crossings, bridges, and other means approved by the Engineer to provide local traffic access to property adjacent to the project. Obtain the Engineer's approval for temporary culvert material, before placement. Provide railroad crossings for local traffic in accordance with subsection 107.20.

   Use pavement gaps or other means approved by the Engineer to maintain two way traffic across intersections. Provide a clear roadway on the cross road, at least 20 feet wide. The Engineer may vary the pavement gap lengths based on the types of vehicles passing through the intersection.

   The Engineer may allow closing a minor road or street intersection, with the approval of the local government agency.

3. **Traffic Maintained on Shoulder.** If the contract requires maintenance of traffic on the shoulder, improve the shoulder as shown on the plans.

   Sweep the shoulder and remove debris prior to placing traffic on the shoulder and throughout the time the shoulder is used to maintain traffic. Properly dispose of collected debris.

   Maintain the shoulder as required and provide labor, material, and equipment to immediately repair and reconstruct the shoulder. Apply surfacing material and dust palliatives as directed by the Engineer.

4. **Shoulders Under Construction.** Ensure shoulder areas adjacent to open traffic lanes are in a safe and usable condition during non-working hours, unless otherwise shown in the plans. Provide the following signs and channelizing devices:

   a. Install one W21-5, "Shoulder Work" sign before the beginning of the unsatisfactory shoulder;

b. Install the relevant W8-9a “Shoulder Drop-Off,” W8-4 ”Soft Shoulder,” or W8-4a ”Rough Shoulder” signs before the unsatisfactory shoulder and at no greater than 1-mile intervals along the non-compliant shoulder;
c. Place plastic drums on the taper, as required by MMUTCD, Part 6, for shoulder closures, at the location where the unsatisfactory shoulder begins; and
d. Place channelizing devices at intervals directed by the Engineer along the length of the affected shoulder without encroaching on the required minimum lane width.

5. **Storage Restrictions for Vehicles, Equipment, and Materials.** Park vehicles and store material in areas that provide minimum exposure to pedestrian and vehicular traffic.

   a. **Working Hours.** During working hours, park workers’ vehicles, idle construction equipment, and stored materials that cannot be removed from the project as follows:

      i. At least 20 feet behind curb faces on roadways with barrier curb; and
      ii. At least 30 feet from the pavement edge on roadways with shoulders or mountable curbs.

   b. **Non-working Hours.** During non-working hours, remove workers’ vehicles, and obtain the Engineer’s approval to store idle construction equipment and materials that cannot be removed from the project at least 30 feet from the traffic lanes, if topography and right-of-way allow.

   c. **Exceptions.** Where the setbacks described in the previous subsections are not possible, furnish and maintain suitable and sufficient signs, lights, barricades, or concrete barriers to delineate parked vehicles, equipment and stored material, subject to approval by the Engineer.

      The Department will not make additional payment for devices used to delineate stored equipment and material.

6. **Maintaining Lights.** Do not mix different light styles or designs on a project.

   Position and maintain Type A, Type C, and Type D lights to ensure visibility on a clear night from a distance of 3,000 feet. Ensure the visibility of Type B, high intensity lights on a sunny day from a distance of 1,000 feet when the sun is not directly on or behind the light. Replace the power source if lights do not meet the visibility requirements. Provide and maintain Type C and Type D LED lights that at least meet the requirements in the MMUTCD and maintain the intensity requirement of 2 candelas in the field.

   Ensure lights work at the time of initial installation and at stage changes during the project. During the project, ensure at least 95 percent of the total number of active lights, work. Ensure that no more than three adjacent lights are non-operational at any time.

Change power sources when directed by the Engineer. Replace damaged or non-functioning lights at no additional cost to the Department.

7. **Cleaning Traffic Control Devices.** Clean barrier reflectors, plastic drums, 42 inch channelizing devices, tubular markers, delineators, signs, barricades, and attached lights in operation on the project to ensure they meet required luminosity. Adjust cleaning frequency based on the exposure of the traffic control devices to unfavorable environmental conditions and the dirt accumulated on the devices.

8. **Traffic Regulators.** Provide traffic regulators for each direction of approaching traffic on primary and intermediate roads, if the movement of traffic is restricted to alternating one way traffic through the construction area. The Engineer may require intermediate traffic regulators at access points throughout the work zone.
   Equip traffic regulators with the following:

   a. High-visibility safety apparel as specified in the MMUTCD;
   b. "Stop/Slow" or "Stop/Stop" sign paddles; and
   c. A two-way hand-held radio system and a standby back-up system, if traffic regulators are not visible to each other.

   Notify and advise traffic regulators of information required to maintain traffic. Illuminate traffic regulator stations at night per subsection 812.03.H

   Provide traffic regulators and other traffic control devices, as approved by the Engineer, to move materials and equipment that may interfere with traffic. The Department will not make additional payment for providing traffic regulators and other traffic control devices necessary only for the Contractor's convenience.

   Ensure persons designated to regulate traffic receive annual training on proper traffic regulating procedures. At a minimum, this training must consist of viewing the video "How to Safely Regulate Traffic in Michigan" and reading the current MDOT handbook, *Traffic Regulators Instruction Manual*. Maintain documentation on persons trained and dates trained and provide to the Engineer upon request.

9. **Traffic Regulating Operations.** Ensure traffic regulating operations do not exceed 2 miles or stop traffic for more than 10 minutes at a time, unless otherwise directed by the Engineer.

H. **Lighting for Night Work.** Furnish, install, operate, maintain and replace, as needed, fixed, portable, or equipment mounted lighting systems that provide lighting to ensure worker and inspector safety on and around the worksite. Provide lighting that allows workers and inspectors to clearly conduct all operations and inspections during hours of darkness. Provided lighting systems must meet the requirements set forth in MIOSHA Rule 408.40133 *Illumination,* MIOSHA Rule 408.42223 (7) *Traffic Control*, section 706, and the contract.

Provide and position the lamps to meet the following lighting requirements: Provide a minimum illumination intensity of 10 foot-candles (108 lux) on a jobsite where construction work is being performed. Maintain a minimum of 5 foot-candles (54 lux) throughout the entire area of operation where workers may pass through on foot or are present but are not performing construction work. Vehicle or equipment headlights are not considered as an approved light source.

Lighting levels will be measured with an illuminance meter. Readings from smart-phones are not acceptable. Readings will be taken where the work is being performed, in a horizontal plane 3 feet above the pavement or ground surface. When necessary, provide additional lights to overlap the footprints of the lights so that the lighting requirements are continuous, and do not fall below the minimum lighting requirements throughout the work area.

Submit a work area lighting plan to the Engineer for review for approval a minimum of 14 calendar days prior to the start of work. The Engineer will have 7 calendar days to review the plan for approval or provide comments for plan revisions required to obtain approval. At a minimum, the plan must include the proposed lighting locations for construction equipment, vehicles and pedestrian paths, identification of a person or persons of authority (including contact information) on the project site responsible to execute the plan requirements, and measures that will be taken to ensure compliance with the plan. All costs and any additional time required to obtain an approved work area lighting plan will not be cause for delay or impact claims.

Design and operate the lighting system to avoid glare that interferes with traffic, workers, or inspection personnel. Aim flood, spot or stadium type luminaries downward at the work and rotated outward no greater than 30 degrees from nadir (straight down). Position balloon lights at least 12 feet above the roadway.

Design the lighting system to light the work area without spilling over to adjoining property. Modify the lighting system, if directed by the Engineer, by rearranging the lights or adding hardware to shield the lights when the lighting system is disturbing adjoining properties.

Provide a power source that adequately powers the lamps to their full capacity. Provide all lighting equipment in good operating condition and in accordance with applicable safety and design codes.

Provide backup lighting to replace lights and equipment during nighttime operations. Store the backup equipment on the project site and have it available for use at all times during the nighttime operations. The backup systems must meet the same criteria as the primary system.

Drive through and observe the lighted area from all traveled directions, including cross roads after initial lighting set up to determine the adequacy of placement and potential for glare. Adjust lighting alignment if necessary. Ensure that the alignment of the lighting does not interfere with or impede traffic on open roadways.

At any time during the course of the nighttime work, should the lighting not meet the requirements, the work must be halted until adequate lighting is provided. This suspension of work will be at no additional cost to the Department and the Contractor cannot receive an extension of time to complete the work.

Use balloon lighting for nighttime traffic regulating operations. Position the balloon lighting for traffic regulators so that the light illuminates the front of the traffic regulator without casting a shadow on the front of the regulator, the light or equipment does not impair the regulator's vision, and the equipment does not impede the regulator's escape path. Position the lighting so that the light does not wash out the lighted arrow at the regulator's station and does not obscure the lighted arrow. Position lighting so that it does not create glare or shine directly in the eyes of oncoming drivers. Illuminate the traffic regulator's station with a minimum illumination intensity of 10 foot-candles (108 lux). Lighting devices used to illuminate nighttime traffic regulator operation that have failed or have been damaged are to be replaced immediately.

Mount the light fixtures on the construction equipment in a mobile operation, in such a way that the view of the equipment operator is not obstructed and a secure connection to the equipment is ensured, with minimum vibration.

Provide each paver with the minimum illumination requirements so that the operator and paving crew can clearly see the material going into the hopper, the auger area, and for alignment. Provide a continuous power source to ensure the lighting is in operation at all times during work. The light should be adjustable up and down, and rotatable horizontally. The area behind the paver must be lighted so the work and operations can be seen clearly and inspected properly.

Equip each roller with four headlights, two facing in each direction of travel. Turn headlights off when facing oncoming traffic and only use them when moving equipment from one location to another.

Provide a continuous power source on each roller with a light tower. The light tower must be a minimum of 4 feet higher than the roller.

When light equipment is not in use, maintain as detailed in section 812.03.G.5.

I. **Chip Seal Surface Treatment and HMA Construction.** Maintain traffic during the placement of chip seals and HMA.

1. **General.** Complete rolling and allow the surface to cool before allowing traffic on chip seal treated and HMA surfaces. If shoulders cannot be used for two-way traffic, arrange for alternating one way traffic around the roadway section being surfaced.

   If conditions allow, and if the Engineer approves, route traffic away from sections of roadway being surfaced. Provide and maintain temporary routes in a condition approved by the Engineer, and at no additional cost to the Department.

2. **Chip Seal Surface Treatment.** Unless closing the road to traffic, treat half of the road width at a time. Do not allow traffic on the treated section of roadway for at least 30 minutes after completion of cover material application and rolling.

3. **Aggregate Surface and HMA.** To handle traffic during aggregate surface and HMA applications, divide the project into sections. The Engineer will determine the length of these sections. Keep traffic off the work area of each section during surface preparation, bond coat application, HMA placement, and rolling. Complete each section and open it to traffic, before closing the next section. Provide local traffic access to property along the project.

4. **Protection of New HMA Pavements.** Keep traffic off new HMA pavement by installing cones or drums on the tangent in addition to the traffic control devices specified in the plans or MMUTCD. Place additional cones or drums at crossroads and commercial driveways to direct the traffic to open travel lanes.

   After completing compaction, if the air temperature is below 70 °F, open the pavement to traffic. If the air temperature is from 70 °F to 80 °F, keep traffic off the pavement for an additional hour. If the air temperature is greater than 80 °F, keep traffic off the pavement for 2 hours.

5. **Staggered Lane Endings with Vertical Longitudinal Joints.** To avoid uneven longitudinal joints, surface lanes within one load of the same ending point at the end of the day's operation. The center lanes of two way pavements with an odd number of lanes are excluded from this requirement.

   Before starting HMA paving operations, furnish the required signs for emergency signing in case staggered lane endings, causing uneven longitudinal joints, must remain open to traffic overnight.

   If uneven longitudinal joints cannot be avoided and remain open overnight, maintain traffic in accordance with the following:

   a. If the points of ending of adjacent lanes are at least 250 feet apart, install temporary signs as required; and
   b. If the points of ending of adjacent lanes are less than 250 feet apart, install plastic drums as called for in the contract, at 30 foot intervals along the length of each side of the affected pavement, and place W21-4 "Road Work Ahead" signs ahead of the pavement area.

6. **Tapered Overlapping Longitudinal Joints.** Unless delayed by inclement weather or otherwise approved by the Engineer, do not expose the tapered overlapping longitudinal joints to traffic for longer than 24 hours after placement. If using a tapered joint, place W8-9b "Uneven Lanes" signs before, and at no greater than 1-mile intervals along the length of, the joint before allowing traffic on the paved lane. Place at least two W8-9b "Uneven Lanes" signs

in each direction. Leave these signs in place until the adjacent lane is constructed to the same elevation. See section 501.03.2.c for allowable tapered overlapping joint details.

J. **Conspicuity Tape for Vehicles and Equipment in Work Zones.** Equip all vehicles and equipment in the work zone, and all vehicles delivering materials or equipment to the project, with red and white conspicuity tape.

Apply one 2-inch wide horizontal stripe of red and white conspicuity tape along at least 50 percent of each side of, and across the full width of the rear of the vehicle or equipment.

Delineate lighted arrow trailers and portable changeable message signs with 2 inch wide red and white conspicuity tape on each of the four sides where tape application is practical.

812.04. Measurement and Payment.

Pay Item	Pay Unit
Minor Traf Devices	Lump Sum
Traf Regulator Control	Lump Sum
Sign, Type __, Temp, Prismatic, Furn	Square Foot
Sign, Type __, Temp, Prismatic, Oper	Square Foot
Sign, Type B, Temp, Prismatic, Special, Furn	Square Foot
Sign, Type B, Temp, Prismatic, Special, Oper	Square Foot
Sign Cover	Each
Sign Cover, Type I	Each
Lighted Arrow, Type __, Furn	Each
Lighted Arrow, Type __, Oper	Each
Lighted Arrow, Type C, Standby	Each
Sign, Portable, Changeable Message, Furn	Each
Sign, Portable, Changeable Message, NTCIP-Compliant, Furn	Each
Sign, Portable, Changeable Message, NTCIP-Compliant, Oper	Each
Sign, Portable, Changeable Message, Oper	Each
High Intensity Light, Type B, Furn	Each
High Intensity Light, Type B, Oper	Each
Plastic Drum, Fluorescent, Furn	Each
Plastic Drum, Fluorescent, Oper	Each
Channelizing Device, 42 inch, Fluorescent, Furn	Each
Channelizing Device, 42 inch, Fluorescent, Oper	Each
Barricade, Type III, High Intensity, Double Sided, Lighted, Furn	Each
Barricade, Type III, High Intensity, Double Sided, Lighted, Oper	Each
Conc Barrier, Temp, Furn	Foot
Conc Barrier, Temp, Oper	Foot
Conc Barrier, Temp, Adj	Foot
Conc Barrier, Temp, Relocated	Foot
Conc Barrier Reflector Replacement	Each

Conc Barrier Ending, Temp, Detail __, Furn ..... Each
Conc Barrier Ending, Temp, Detail __, Oper ..... Each
Conc Barrier Ending, Temp, Detail __, Adj ..... Each
Conc Barrier Ending, Temp, Detail __, Relocated ..... Each
Pavt Mrkg, Wet Reflective, Type R, Tape, __ inch, (color), Temp ..... Foot
Pavt Mrkg, Wet Reflective, Type NR, Paint, __ inch, (color), Temp ..... Foot
Pavt Mrkg, Wet Reflective, Type NR, Tape, __ inch, (color), Temp ..... Foot
Pavt Mrkg, Wet Reflective, Type R, Tape, __ inch, Crosswalk ..... Foot
Pavt Mrkg, Wet Reflective, Type R, Tape, 12 inch, Cross Hatching, (color) ..... Foot
Pavt Mrkg, Wet Reflective, Type R, Tape, __ inch, Stop Bar ..... Foot
Pavt Mrkg, Wet Reflective, Type R, Tape, (legend) ..... Each
Pavt Mrkg, Wet Reflective, Type R, Tape, (symbol) ..... Each
Pavt Mrkg, Type NR, Paint, __ inch, Crosswalk ..... Foot
Pavt Mrkg, Type NR, Paint, 12 inch, Cross Hatching, (color) ..... Foot
Pavt Mrkg, Type NR, Paint, __ inch, Stop Bar ..... Foot
Pavt Mrkg, Type NR, Paint, (legend) ..... Each
Pavt Mrkg, Type NR, Paint, (symbol) ..... Each
Pavt Mrkg, Longit, Water Blasting, 6 inch or less Width, Rem ..... Foot
Pavt Mrkg, Longit, Water Blasting, Greater than 6 inch Width, Rem ..... Foot
Raised Pavt Marker, Temp, Type __, (color), Monodirectional ..... Each
Raised Pavt Marker, Temp, Type __, (color), Bidirectional ..... Each
Pavt Mrkg, Longit, 6 inch or Less Width, Rem ..... Foot
Pavt Mrkg, Longit, Greater than 6 inch Width, Rem ..... Foot
Pavt Mrkg Cover, Type R, (color) ..... Foot
Part Width Intersection Construction ..... Each
Dust Palliative, Applied ..... Ton
Culv, Temp ..... Each
TS, Temp, Furn ..... Each
TS, Temp, Oper ..... Each
PTS System, Temp, Furn ..... Each
PTS System, Temp, Oper ..... Each
Ltg for Night Work ..... Lump Sum
Temp Rumble Strips (Orange), Stop Condition ..... Foot
Temp Rumble Strips (Orange), Advance of a Work Zone ..... Foot
Delineator, Flexible, Temp, Furn ..... Each
Delineator, Flexible, Temp, Oper ..... Each
Delineator, Panels, Temp, Furn ..... Each
Delineator, Panels, Temp, Oper ..... Each
Glare Screen, Temp ..... Foot
Glare Screen, Temp, Relocated ..... Foot
Glare Screen, Temp, Complete Section, Replaced ..... Each
Tubular Marker ..... Each
Tubular Marker, Replacement ..... Each
Conc Barrier-Mtd Temp Sign System, Furn ..... Each

DRAFT – July 2020

Conc Barrier-Mtd Temp Sign System, Oper ..... Each
Reflective Panel for Temp Sign Support, Furn..... Each
Reflective Panel for Temp Sign Support, Oper ..... Each

If the contract does not include pay items for improving the shoulder to maintain traffic, the Engineer will measure, and the Department will pay for shoulder improvements as extra work.

The Department will pay for additional traffic control devices if changes benefit the Department. The Department will not pay for additional devices required for the Contractor's convenience unless the Contractor can show a benefit to the Department.

A. **Damage Compensation.** Notify the Engineer of damaged temporary traffic control devices. Before replacement and disposal, allow the Engineer to verify the condition of damaged temporary traffic control devices eligible for payment. Damage will be assumed to have occurred from vehicular traffic, unless otherwise documented. The Department will pay as follows, for replacing temporary traffic control devices or equipment that are placed appropriately and damaged by vehicular traffic, other than the Contractor's vehicles and equipment. Devices will be assumed to be placed appropriately unless otherwise documented. Replacement will be made up to project completion (excluding water and cultivating) and acceptance, as follows:

1. The **Furnished** unit price for temporary traffic control devices paid for as furnished pay items, excluding plastic drums and 42 inch channelizing devices;
2. The unit price for devices not paid for as **Furnished**;
   a. Plastic drums and 42 inch channelizing devices will be paid for at a set rate of $35 per plastic drum and $18 per damaged 42 inch channelizing device.
      i. Prior to payment the plastic drum or 42 inch channelizing device must be classified as unacceptable, per the ATSSA *Quality Guidelines for Temporary Traffic Control Devices and Features* (ATSSA QG), and spray-painted with an X.
      ii. All plastic drums and 42 inch channelizing devices that are classified as marginal, per the ATSSA QG, during the project, will have blue survey ribbon tied to the handle. MDOT will be responsible for marking marginal devices. Removal and replacement will take place as defined under the Quality Classifications and Requirements section of the ATSSA QG and will be at no additional cost to the Department.
      iii. If at any time, any Contractor, is witnessed tampering with the marginal marking method, the Engineer may require all marginal devices on the project to be upgraded to acceptable outside the timeframes detailed in the ATSSA QG.
3. The manufacturer's invoice cost for devices required by the Engineer and not included in the unit price for other relevant pay items; and
4. The manufacturer's invoiced cost for damaged equipment included in a lump sum pay item for maintaining traffic.

B. **Cleaning Traffic Control Devices.** The unit prices for traffic control devices include the cost of cleaning traffic control devices.

C. **Furnished Pay Items.** For pay items designated as furnished, the Engineer will measure, and the Department will pay for the maximum number of units required by the Engineer at one time on the project.

The Engineer will measure **Sign, Type __, Temp, Prismatic, Furn** as the total cumulative area of the maximum number of each sign legend that is in use during the course of the project unless previously paid. The unit price for **Sign, Type __, Temp, Prismatic, Furn** includes the cost of portable or driven sign supports.

Sign, Type B, Temp, Prismatic, Special, Furn will be paid for the same as described for the pay item Sign, Type, __, Temp, Prismatic, Furn. In addition, the pay item includes the fabrication of all initial route markers and overlays for the Type B, Temporary, Prismatic, Special Signs.

The unit prices for furnished pay items include the cost of the following:

1. Providing the item in operable condition with required equipment, supplemental weights, hardware, and labor;
2. Initially installing the item; and
3. Replacing items damaged by vehicular traffic other than by the Contractor's vehicles or equipment.

The Department will pay for furnished pay items once per project when placed into operation, unless the Engineer approves a price adjustment for an authorized extension of time.

D. **Operated Pay Items.** For pay items designated as operated, the Engineer will measure, and the Department will pay for the maximum number of units required by the Engineer at one time on the project.

The Engineer will measure **Sign, Type __, Temp, Prismatic, Oper** as the total cumulative area of the maximum number of each sign legend that is in use during the course of the project unless previously paid.

Sign, Type B, Temp, Prismatic, Special, Oper will be paid for the same as described for the pay item Sign, Type __, Temp, Prismatic, Oper. Payment for operated items also includes the removal of all portable or driven sign supports (including post stubs and ballast) used to install the Type B, Temporary, Prismatic, Special signs.

Payment for operated items will also include the installation and/or removal of all overlays used to modify portions of Type B, Temporary, Prismatic, Special signs as specified on the plans, proposal or required by the Engineer and includes all equipment and material necessary to install and/or remove the overlays as required for the life of the contract. When sign overlays, including different route markers, are used to modify portions of Type B, Temporary, Prismatic, Special signs, only the overlay will be paid for as additional square footage of **Sign, Type B, Temp, Prismatic, Special, Furn.**

The unit prices for operated pay items, with the exception of **Conc Barrier, Temp Oper** and **TS, Temp, Oper**, include the cost of the following:

1. Operating;
2. Inspecting, and maintaining;
3. Relocating (unless a specific pay item exists for relocation of the item, i.e. barrier endings); and
4. Removing the item from the project.

E. **Minor Traffic Devices and Traffic Regulator Control.** The Department will make partial payments for **Minor Traf Devices** and **Traf Regulator Control** in accordance with Table 812-2. The Department will not allow claims for additional compensation for inconvenience or delay caused by Department-performed routine maintenance operations.

Table 812-2
Partial Payment Schedule for Minor Traf Devices and Traf Regulator Control

Percent of original contract amount earned	Total percent of unit price paid
First Use	50
50	75
90	100

1. **Minor Traffic Devices.** The unit price for **Minor Traf Devices** includes the cost of the following:

   a. Providing, installing, maintaining, relocating, and removing traffic devices, not shown on the plans;
   b. Maintaining local traffic including but not limited to pedestrian walkways and crossways, maintaining access to residents and business owners, delivery trucks, emergency vehicles and school buses, and maintaining local bike paths;
   c. Removing, storing, and reinstalling Department-owned permanent signs and supports; and
   d. Installing safety enhancement(s) required including reflective conspicuity tape on vehicles and equipment.

2. **Traffic Regulator Control.** The unit price for **Traf Regulator Control** includes the cost of the following:
   a. Providing personnel;
   b. Providing and operating equipment; and
   c. Providing traffic regulator training in accordance with subsection 812.03.G.8.

F. **Temporary Roadway and Approaches.** The Department will pay separately for constructing and maintaining temporary roadways and approaches using the following relevant pay items:

1. Earth excavation,
2. Temporary culverts,
3. Temporary structures,
4. Temporary traffic control device,
5. Surfacing material, and
6. Dust palliatives.

G. **Sign Cover.** The Department will pay for the maximum number of sign covers required, at one time on the project. The unit price for **Sign Cover** includes the cost of furnishing, installing, and removing the sign covers.

The Engineer will only measure approved materials and hardware for payment.

The unit price for **Sign Cover, Type I** includes the cost of providing shop drawings, fabricating, furnishing, installing, and removing a Type 1 sign cover.

H. **Lighted Arrow, Type C, Standby.** The Department will pay for **Lighted Arrow, Type C, Standby** only if the pay item is shown on the plans. The cost of providing a fully operable unit and placing it on standby, readily available to replace a damaged unit, is included in the unit price for **Lighted Arrow, Type C, Standby**. The Department will only pay once for the standby unit during the project.

The Department will allow the use of the standby unit to replace a unit removed from service for maintenance, but will not pay for replacing the standby unit.

I. **Sign, Portable, Changeable Message.**

1. **Sign, Portable, Changeable Message, Furn** includes all material, communication devices, equipment and labor required to furnish a PCMS and install at the location as depicted on the plans, or as directed by the Engineer. The work for furnishing includes site delivery and setup, including initial testing and training, and the removal of the PCMS upon completion of the project.

2. **Sign, Portable, Changeable Message, Operated.** The unit price for **Sign, Portable, Changeable Message, Oper** includes the cost of programming and operating the sign in accordance with subsection 812.04.E.

J. **Sign, Portable, Changeable Message, NTCIP-Compliant.**

1. **Sign, Portable, Changeable Message, NTCIP-Compliant, Furn** includes all material, communication devices, equipment and labor required to furnish a PCMS and install at the location as depicted on the plans, or as directed by the Engineer. The work for furnishing

includes site delivery and setup, including initial testing and training, and the removal of the PCMS upon completion of the project.

2. **Sign, Portable, Changeable Message, NTCIP-Compliant, Oper** includes all material, communication devices, equipment, and labor required to operate, control, inspect, maintain, and relocate the PCMS throughout the life of the project.

K. **Barricade, Type III, High Intensity, Double Sided, Lighted, Furnished.** The unit price for **Barricade, Type III, High Intensity, Double Sided, Lighted, Furn** include the cost of providing and installing barricades, each with supplemental weights, and two Type C or Type D lights.

L. **Concrete Barrier, Temporary.**

1. **Furnish Barrier.** The unit price for **Conc Barrier, Temp, Furn** includes the cost of providing and installing concrete barriers in the initial location with barrier reflector markers attached.

   The Engineer will measure and the Department will pay for providing and installing one **Type B High Intensity Light, Furn** and one **Type B High Intensity Light, Oper** on the concrete barrier approaching taper or tangent breakpoint, as shown on in the plans or Standard Plan R-126 series.

2. **Operate Barrier.** The unit price for **Conc Barrier, Temp, Oper** includes the cost of operating, maintaining, and removing concrete barrier from the project.

3. **Adjust Barrier.** The unit price for **Conc Barrier, Temp, Adj** includes the cost of moving the temporary concrete barrier and tapers, including barriers and tapers located outside the roadbed, laterally to a new alignment on the same roadbed.

4. **Relocate Barrier.** The Engineer will not measure a temporary concrete barrier move as **Conc Barrier, Temp, Relocated** if it involves work defined in subsection 812.04.L.3.

   The unit price for **Conc Barrier, Temp, Relocated**, includes the cost of relocating temporary concrete barrier longitudinally on the same roadbed, or to another roadbed, including temporarily storing the barrier. Temporary storage of the barrier includes removing, loading and hauling the barrier to a temporary storage site followed by reloading, hauling, and re-installation in the new location.

5. **Barrier Reflector Replacement.** The unit price for **Conc Barrier Reflector Replacement** includes the cost of removing damaged markers from temporary concrete barrier sections after initial placement, and providing and installing new barrier reflectors.

M. **Temporary Concrete Barrier Ending.** The Engineer will measure and the Department will pay for temporary concrete barrier endings specified for Detail 1 and Detail 3 as **Conc Barrier,**

Temp. The Department will pay for removing and reconstructing guardrail required for Detail 3 in accordance with section 807.

The Engineer will measure, and the Department will pay for temporary concrete barrier endings specified for Detail 2, Detail 4, and Detail 5 in accordance with subsection 812.04.M.1 through subsection 812.04.M.4.

1. **Furnish Barrier Ending.** The unit price for **Conc Barrier Ending, Temp, Furn** includes the cost of the following:

    a. Providing and delivering attenuators to the project as shown on the plans, or directed by the Engineer;
    b. If applicable, constructing attenuator base pads, foundations, anchor blocks, and backup units;
    c. Installing the hardware, appurtenances, and attenuators;
    d. Connect the unit to the backup and to the front anchoring system;
    e. Providing and installing transition assemblies, transition panels, end panels, and other miscellaneous accessories for connecting to concrete barrier;
    f. Ensuring an individual, trained by the manufacturer in the installation of impact attenuator systems, is present during attenuator installation; and
    g. Providing and installing an object marker to the nose of the attenuator.

2. **Operate Barrier Ending.** The unit price for **Conc Barrier Ending, Temp, Oper** includes the cost of the following:

    a. Repairing the attenuator during construction;
    b. Ensuring an individual trained by the manufacturer in the installation and repair of impact attenuator systems is present during all attenuator repairs and final attenuator removal;
    c. Ensuring the fluid inside water-filled attenuator systems does not freeze at any time during operation, providing environmentally safe anti-freezing agents as needed, and recovering all fluids containing anti-freezing agents when draining water-filled attenuator systems.
    d. Final removal and disposal of the attenuator after the attenuator is no longer needed; and
    e. If applicable, final removal and disposal of attenuator base pads, foundations, anchor blocks, backups, and associated hardware after the attenuator is no longer needed.

3. **Adjust Barrier Ending.** The unit price for **Conc Barrier Ending, Temp, Adj** includes the cost of moving the temporary concrete barrier ending, including those located outside the roadbed, laterally to a new alignment on the same roadbed. The unit price for **Conc Barrier Ending, Temp, Adj** includes the cost of the following:

    a. Removing the attenuator, connections, hardware, and appurtenances from the existing location;
    b. If applicable, removing attenuator base pads, foundations, anchor blocks and backup units from the existing location;

c. If applicable, constructing attenuator base pads, foundations, anchor blocks, and backup units at the new location; and
d. Transporting and installing the attenuator, connections, hardware, and appurtenances in accordance with the manufacturer's specifications at the new location. If applicable, this includes providing hardware and appurtenances, as needed, for attenuator installation at the new location.

4. **Relocate Barrier Ending.** The Engineer will not measure a temporary barrier ending move as **Conc Barrier Ending, Temp, Relocated** if it involves work defined in subsection 812.04.M.3. The unit price for **Conc Barrier Ending, Temp, Relocated** includes the cost of moving the temporary concrete barrier ending longitudinally on the same roadbed, or to another roadbed, including temporarily storing the barrier ending. Temporary storage of the barrier ending includes loading and hauling the ending to a temporary storage site followed by reloading and hauling to the new location. The unit price for **Conc Barrier Ending, Temp, Relocated** includes the cost of the following:

a. Removing the attenuator, connections, hardware, and appurtenances from the existing location;
b. If applicable, removing attenuator base pads, foundations, anchor blocks and backup units from the existing location;
c. If applicable, constructing attenuator base pads, foundations, anchor blocks, and backup units at the new location; and
d. Transporting and installing the attenuator, connections, hardware, and appurtenances in accordance with the manufacturer's specifications at the new location. If applicable, this includes providing hardware and appurtenances, as needed, for attenuator installation at the new location.

N. **Removing Pavement Markings and Temporary Pavement Markings.**

1. **Removing Pavement Markings.**

a. The Department will pay for the removal of longitudinal markings as directed by the Engineer on all HMA surfaces and on concrete surfaces to be removed as **Pavt Mrkg, Longit, Rem**, of the width required. The unit prices for **Pavt Mrkg, Longit, Rem** pay items include the cost of removing existing longitudinal permanent markings and/or temporary Type NR markings.

b. The Department will pay for the removal of longitudinal markings on concrete surfaces to remain in place as **Pavt Mrkg, Longit, Water Blasting, Rem**, of the width required. The unit prices for **Pavt Mrkg, Longit, Water Blasting, Rem** pay items include the cost of removing existing longitudinal permanent markings and/or temporary Type NR markings.

c. The Department will pay for removing special markings as Rem Spec Mrkg, in accordance with subsection 811.04.E.

2. **Temporary Pavement Markings.**
The Engineer will measure temporary pavement markings, of the type required, as the actual length of equivalent line placed. The Engineer will not measure the skips in dashed lines regardless of the type or width of markings.

   a. **Non-Removable (Type NR) Pavement Markings**. The unit price for the relevant **Pavt Mrkg, Wet Reflective, Type NR, Paint, Temp** and **Pavt Mrkg, Wet Reflective, Type NR, Tape, Temp** pay items include the cost of providing and placing temporary pavement markings.

   b. **Removable (Type R) Pavement Markings.** The unit prices for **Pavt Mrkg, Wet Reflective, Type R, Tape, 4 inch, (color), Temp**; **Pavt Mrkg, Wet Reflective, Type R, Tape, 8 inch, (color), Temp**; and **Pavt Mrkg Cover, Type R, (color)** include the cost of providing, placing, removing and disposing of temporary pavement marking. Payment will be per foot measured along the length of the placed pavement marking.

3. **Temporary Special Markings.** Replace temporary special pavement markings that fail as directed by the Engineer. Temporary special pavement markings that fail due to improper installation per the manufacturer's specifications will not be paid for separately. The Engineer will document the failure and meet with the Contractor to discuss the reason for failure. If the Engineer determines the failure was due to traffic, reapplication of the temporary special pavement marking will be paid for at the contract unit price.

   a. **Non-Removable (Type NR), Paint. Pavt Mrkg, Type NR, Paint, __ inch, Crosswalk; Pavt Mrkg, Type NR, Paint, 12 inch, Cross Hatching, (color); Pavt Mrkg, Type NR, Paint, __ inch, Stop Bar; Pavt Mrkg, Type NR, Paint, (legend);** and **Pavt Mrkg, Type NR, Paint, (symbol)** include all materials, labor, and equipment necessary to provide, place, and maintain temporary pavement markings. Removal will be paid for separately under the respective pay items.

   b. **Removable (Type R), Tape.** The unit prices for **Pavt Mrkg, Wet Reflective, Type R, Tape, __ inch, Crosswalk; Pavt Mrkg, Wet Reflective, Type R, Tape, 12 inch, Cross Hatching, (color); Pavt Mrkg, Wet Reflective, Type R, Tape, __ inch, Stop Bar; Pavt Mrkg, Wet Reflective, Type R, Tape, (legend);** and **Pavt Mrkg, Wet Reflective, Type R, Tape, (symbol)** include all materials, labor, and equipment necessary to provide, place, maintain, remove, and properly dispose of temporary pavement markings.

4. **Temporary Raised Pavement Markers.** The unit prices for **Raised, Pavt Marker, Temp** pay items include the cost of providing, installing, maintaining, removing and disposing of raised pavement markers.

O. **Part Width Intersection Construction.** The Engineer will measure, and the Department will pay for **Part Width Intersection Construction** by the number of intersections required by the

contract. The Engineer will measure intersections as one unit regardless of the number of legs or the number of construction stages.

The unit price for **Part Width Intersection Construction** includes the cost of providing additional temporary traffic control measures and operations specified for the work performed in the intersection.

The Department will pay separately for earth excavation, temporary traffic control devices, surfacing materials, and dust palliatives for the construction and maintenance of temporary roadways required for part width intersection construction.

P. **Dust Palliative.** The Engineer will measure, and the Department will pay for **Dust Palliative, Applied** by weight of calcium chloride, based on the concentration of solids or solution delivered, as indicated on the delivery report or as determined by testing.

The Engineer will not measure additives combined with the gravel before, or at the time of gravel surface placement for payment as **Dust Palliative, Applied**.

Q. **Culvert, Temporary.** The unit price for **Culv, Temp** includes the cost of constructing and maintaining temporary culverts, and removing them before project completion.

R. **Traffic Signal (TS), Temporary.** The Department will reimburse the Contractor, based on paid utility company invoices, for the cost to provide secondary service on the project. Reimbursable costs include the cost of installing and removing wood poles, wiring, transformers, and electricity for the signals.

A signal system required to maintain one lane of traffic on a bi-directional roadway is considered one location.

The unit price for **TS, Temp, Furn** includes the cost of providing and installing all components required to provide a complete and operating unit, per location shown on the plans.

The unit price for **TS, Temp, Oper** includes the cost of the following for each temporary traffic signal within the project limits:

1. Operating, including signal timing changes directed by the Engineer;
2. Inspecting;
3. Maintaining;
4. Disconnecting;
5. Covering; and
6. Removing the temporary traffic signals.

S. **Portable Traffic Signal (PTS) System.** The Department will not make additional payments for traffic regulating, signing, arrow boards, and lighting systems for traffic regulator stations operated at night due to a temporary PTS system failure.

1. **Furnish PTS System.** The unit price for **PTS System, Temp, Furn** includes the cost of the following:

    a. Providing, installing, programming, and activating temporary PTS systems in the initial required location;
    b. Two trailer-mounted, solar powered portable traffic signals with battery back-up;
    c. Radio linked communications with hardwire capabilities and conflict monitoring; and
    d. Removing or modifying guardrail to place trailers.

2. **Operate PTS System.** The unit price for **PTS System, Temp, Oper** includes the cost of the following:

    a. Operating;
    b. Inspecting, and maintaining;
    c. Delineating with conspicuity tape;
    d. Relocating, reactivating, and reprogramming;
    e. Removing the system from the project;
    f. Removing or modifying guardrail; and
    g. Replacing guardrail.

The Department will pay separately for the cost of delineating each PTS trailer.

T. **Lighting for Night Work.** The unit price for Ltg for Night Work includes submittal of a work area lighting plan and furnishing, installing, relocating, replacing, and maintaining lighting for the entire project. There will be no adjustments in the lump sum price regardless of the number or type of lighting systems or if stand by units are required to complete all night work on the project as described in subsection 812.03.H and as directed by the Engineer.

U. **Price Adjustments for Authorized Extensions of Time.** The Department will not adjust the unit price for **TS, Temp, Furn** for authorized extensions of time.

The Department will not make price adjustments for temporary traffic control devices, **Minor Traf Devices**, and **Traf Regulator Control** during authorized extensions of time if liquidated damages are assessed in accordance with subsection 108.10. If liquidated damages are not assessed, the Department will adjust unit prices for the following:

1. **TS, Temp, Oper**;
2. **PTS System, Temp, Oper**;
3. Items designated as furnished, operated, or standby, unless otherwise specified;
4. Items paid for as each or foot as required by the contract;

5. Items measured as lump sum if they are used or required on the worksite during authorized extensions of time except that **Minor Traf Devices** will not be adjusted when conspicuity tape is the only minor traffic control device in service or required during the authorized extension of time; and
6. Items not in use required by the Engineer as standby.

The Department will use the following formula to calculate the unit price adjustments. The adjustment for **Minor Traf Devices** will be at a daily rate of (A/B) not to exceed $900.00 per calendar or work day and the adjustment for **Traf Regulator Control** will be at a daily rate of (A/B) not to exceed $650.00 per calendar or work day. When calculating the adjustment, either calendar or working days will be used for both original contract time and additional days.

$$\left(\frac{A}{B}\right) C = unit\ price\ adjustment \qquad \text{Formula 812-1}$$

where:

A = Original contract unit price
B = Original contract time
C = Additional days the item was in use or required to be on standby during the authorized extension of time.

The Department will determine the number of additional days the item is on standby or in use in calendar days.

For calendar date contracts, the original contract time will be calculated as the number of calendar days from the actual start date to the following order of precedence date as identified within the contract:

a. The latest open to traffic date if removal of all traffic control devices coincides with this date.
b. The latest interim completion date for each season of work if all contract work must be completed in its entirety except turf establishment and watering and cultivating.
c. The original contract completion date.

For work day projects, if an authorized extension of time extends into the next construction season, including seasonal suspension periods during which a traffic control item is on standby or in use, the original contract time will be the calendar days between the first work day and the expiration of the original contract completion.

V. **Temp Rumble Strips (Orange), Stop Condition** and **Temp Rumble Strips (Orange), Advance of a Work Zone** includes all labor, equipment, and material required to furnish, install, maintain, and remove the rumble strips. **Temp Rumble Strips (Orange), Stop Condition** and **Temp Rumble Strips (Orange), Advance of a Work Zone** includes replacing or re-adhering

strips, as directed by the Engineer, and providing traffic control while installing, maintaining, re-adhering and removing the strips.

The Engineer will measure the cumulative length of the individual 4 inch strips, perpendicular to the pavement centerline, to determine the quantity for payment.

X. **Delineator, Temporary**

1. **Delineator, Flexible, Temp, Furn** and **Delineator, Panels, Temp, Furn** will be paid for as specified in subsection 812.04.C. Damaged **Delineator, Flexible, Temp, Furn** and **Delineator, Panels, Temp, Furn** will be replaced as directed by the Engineer and replacement will be paid for as detailed in subsection 812.04.A of the Standard Specifications for Construction.

2. **Delineator, Flexible, Temp, Oper** and **Delineator, Panels, Temp, Oper** will be paid for as specified in subsection 812.04.D.

Y. **Glare Screen, Temp** includes all labor, material and equipment, including all necessary traffic control devices, required to furnish, install and maintain the **Glare Screen, Temp** for the duration the temporary glare screen is required.

The adjustment of **Glare Screen, Temp** attached to temporary barrier, that is adjusted at locations identified on the plans or in the proposal is included in the pay item **Glare Screen, Temp**.

Payment for replacing damaged glare screen blades as a result of an impact, by other than the Contractor, is included in the pay item **Glare Screen, Temp** when replacement of the entire section of temporary glare screen is not required.

Payment for adjusting **Glare Screen, Temp** that has been misaligned as a result of an impact, by other than the Contractor, is included in the pay item **Glare Screen, Temp**.

Payment for the removal of **Glare Screen, Temp** when it is no longer required for an operation is considered to be included in the pay item **Glare Screen, Temp**.

Glare Screen, Temp, Relocated includes all labor, materials and equipment including all necessary traffic control devices required to relocate and install the **Glare Screen, Temp** on temporary or permanent barrier located on a different roadbed within the project limits or to other locations identified in the plans or proposal.

Glare Screen, Temp, Complete Section, Replaced includes all labor, materials and equipment including all necessary traffic control devices required to replace complete section(s) of Glare Screen, Temp, attached to temporary or permanent barrier, damaged by other than the Contractor. The length of a complete section of **Glare Screen, Temp** is defined as being equal

to the length of the temporary glare screen base with flexible blades attached as fabricated by the temporary glare screen manufacturer.

Payment will not be made for the gap in the **Glare Screen, Temp** approaching a required Type B high intensity light.

All costs, including all labor, materials and equipment and all necessary traffic control devices required to replace, install, maintain, adjust, or realign **Glare Screen, Temp** and/or the **Glare Screen, Temp** components, that have been damaged, dislodged or misaligned as a result of the Contractor's operations must be borne by the Contractor.

Z. **Tubular Marker** includes all labor, equipment, and materials to furnish and install posts, bases, mounting hardware, epoxy or adhesive and retro-reflectorized sheeting at the locations shown on the plans. **Tubular Marker** also includes removal of the devices.

AA. **Tubular Marker, Replacement** includes removing a damaged vertical tube from the base after initial placement, and furnishing and installing a new vertical tube.

BB. **Concrete Barrier Mounted Temporary Sign System** All prismatic signs used in conjunction with this device will be paid for separately with other pay items.

1. **Conc Barrier-Mtd Temp Sign System, Furn,** includes all labor, equipment, and materials to furnish and install posts, bases, and mounting hardware at the locations shown on the plans and replacement of sign systems damaged by vehicular traffic other than the Contractor's vehicles and equipment. It includes all costs and traffic control required to replace a damaged temporary barrier-mounted sign system as directed by the Engineer.

2. **Conc Barrier-Mtd Temp Sign System, Oper,** includes all costs for cleaning, and relocating as necessary the sign system throughout the life of the contract, as well as all costs associated with the repair of barrier sections necessitated by use of this system.

CC. **Reflective Panel for Temporary Sign Support.**

1. **Reflective Panel for Temp Sign Support, Furn** will be measured by each reflective strip attached to a sign support in accordance to the guidelines above. Subsection 812.04.C will be used to determine how the item will be paid. Payment includes all labor, materials, and equipment required to fabricate, furnish and install the reflective panel to the sign support as depicted on the plans or as directed by the Engineer. Signs that straddle the median concrete barrier will have two sign supports paid for on each sign.

2. **Reflective Panel for Temp Sign Support, Oper** will be measured by each reflective strip attached to a sign support in accordance to the guidelines above. Subsection 812.04.D will be used to determine how the item will be paid. Signs that straddle the median concrete barrier will have two sign supports paid for on each sign.

Section 813. SLOPE PROTECTION

813.01. Description. This work consists of constructing precast and cast-in-place concrete slope paving, including plain, heavy, and grouted riprap, and associated headers.

813.02. Materials. Provide materials in accordance with the following:

Cement	901
Granular Material Class II	902
Curing Compound	903
Steel Reinforcement	905
Geotextile Liner	910
Precast Concrete Slope Paving Blocks	913
Riprap	916
Heavy Riprap	916
Concrete, Grade 3000	1004
Mortar, Type R-3	1005

Provide a retarding admixture, selected from the Qualified Products List, if additional time is required between adding water to the concrete mixture and placing the concrete. Do not exceed the manufacturer's recommended maximum initial set time.

813.03. Construction.

A. **Base Preparation.** Excavate or fill to the required subgrade. Compact and shape the subgrade for the following:

1. The bottom of the riprap;
2. Precast and cast-in-place concrete slope paving; or
3. The bottom of the granular material layer.

Dispose of the surplus excavated subgrade material in accordance with subsection 205.03.P. Trim the subgrade to the Class A slope tolerances specified in subsection 205.03.N. Construct the granular material layer in accordance with subsection 301.03, except compact the material to at least 90 percent of the maximum unit weight.

B. **Precast Concrete Slope Paving.** Place concrete in accordance with the weather and temperature limitations specified in subsection 602.03.T when fabricating precast concrete slope paving. Install the precast units on a layer of granular material base. Fill the joints between precast units with Type R-3 mortar. Moisten the edges of the precast units when placing the mortar. Place mortar beginning at the lower end of the joints and proceeding to the upper end of the joints. Completely fill the joints between the precast units after consolidation. Remove excess mortar from the surface of the slope paving. Cure and protect the mortar in accordance with subsection 813.03.C.3.

C. **Concrete Slope Paving.**

1. **Forms.** Use wood or metal forms, straight and free of warp, and capable of resisting deflection during concrete placement. Form the concrete full depth. Stake forms, including slab division forms, to the required line and grade. Provide straight and continuous slab division joints. Form blocks of the dimensions shown on the plans.

2. **Placing and Finishing Concrete.** Place concrete in accordance with the weather and temperature limitations specified in subsection 602.03.T. Maintain a moist base during concrete placement. Place concrete to the required depth in a continuous operation.

   Place concrete within 1½ hours of adding water into the mix. Do not retemper.

   Consolidate the concrete along the faces of the forms. Tamp the concrete surface to remove voids and strike off with a strike board to the required grade and cross section.

   Finish the concrete surface with a wood float. Round the edges and joints to a ¼ inch radius with a Department-approved finishing tool. Remove edging and finishing tool marks with a float and soft bristle brush.

3. **Curing and Protection.** Cure the concrete by applying a transparent membrane curing compound specified in subsection 903.07.B.

D. **Slope Paving Headers.** Use forms for slope paving headers in accordance with subsection 813.03.C.1.

If concrete placement is required below the elevation of the slope paving subgrade, or granular material layer, the concrete may be cast neat to the earth, as approved by the Engineer.

Place steel reinforcement in accordance with subsection 802.03.C. Place and finish slope paving header concrete in accordance with subsection 813.03.C.2. Cure slope paving header concrete in accordance with subsection 813.03.C.3.

E. **Riprap.** Place geotextile liner under the riprap. Place the liner in a key trench at the toe of the slope if the riprap ends at or below a high water elevation. After the riprap is in place, anchor the geotextile in a key trench at the tops of slopes with a ratio of 1:3 or steeper. Construct the upper key trench to 1½ feet deep, or three times the minimum riprap dimension, whichever is greater. Provide a setback between the top of the slope and the upper key trench at least equal to the trench depth. Backfill the upper trench with riprap material unless otherwise directed by the Engineer.

Overlap geotextile seams by at least 2 feet. If laying geotextile horizontally, start at the bottom of the slope and shingle lap additional layers to direct surface runoff. Place riprap onto the geotextile without dumping or dropping riprap into place.

1. **Plain Riprap.** Begin the riprap placement in the trench at the toe of the slope and progress upward. Place individual stones, embedding each stone into the slope, and interlock against adjoining stones. Place random and well-broken joints between consecutive rows of stones. Compact the riprap as construction progresses. Unless using precast concrete blocks, construct riprap at least 18 inches thick, measured perpendicular to the slope.

2. **Grouted Riprap.** Place riprap in accordance with subsection 813.03.E.1. Fill the spaces between the stones with Type R-3 mortar. Place the mortar from joint bottom to top and completely fill the voids between the stones after consolidation. Leave the top surface of the stone exposed. Immediately remove excess mortar with a stiff brush. Cure and protect grouted riprap in accordance with subsection 813.03.C.3.

3. **Heavy Riprap.** Place heavy riprap in accordance with subsection 813.03.E.1. Unless using precast concrete blocks, construct heavy riprap at least 36 inches thick, measured perpendicular to the slope. If using broken concrete, place in two layers with staggered joints and fill voids with smaller pieces of broken concrete, as approved by the Engineer.

813.04. Measurement and Payment.

Pay Item	Pay Unit
Slope Paving, Precast Conc	Square Yard
Slope Paving, Conc.	Square Yard
Slope Paving Header	Foot
Riprap, Grouted	Square Yard
Riprap, Plain	Square Yard, Ton
Riprap, Plain, LM	Cubic Yard
Riprap, Heavy	Square Yard, Ton
Riprap, Heavy, LM	Cubic Yard

A. **Concrete Acceptance.** Conduct concrete quality control as specified in section 1002. The Engineer will conduct quality assurance as specified in section 1003. The Department will pay for this work based on the quality assurance results.

B. **Slope Paving.** The unit prices for slope paving pay items include the cost of admixtures, excavation, and disposal of surplus materials. The unit prices for slope paving pay items also include the cost of granular material, unless the plans include the pay item Granular Material.

C. **Slope Paving Header.** The Engineer will measure Slope Paving Header in place, including both sides and the toe.

D. **Riprap.** The unit prices for riprap items include furnishing all materials, equipment, and labor to divert stream flow, clear and prepare grades, excavate and dispose of surplus or unsuitable materials, furnish and place geotextile liner or heavy geotextile liner as applicable and place the riprap, including headers.

Section 814. PAVED DITCHES

814.01. Description. This work consists of constructing paved ditches using cobble, concrete, or Hot Mix Asphalt (HMA).

814.02. Materials. Provide materials in accordance with the following:

HMA Mixture	501
Curing Compound	903
Steel Reinforcement	905
Geotextile Liner	910
Cobblestones	916
Concrete, Grade 3000	1004
Mortar, Type R-3	1005

A. **HMA Paved Ditches.** Provide HMA that matches the shoulder leveling course HMA as shown on the plans. Obtain the Engineer's approval for the HMA mixture in accordance with section 501.

B. **Concrete Paved Ditches.** Provide a retarding admixture, selected from the Qualified Products List, if placing concrete more than 1½ hours after adding water to the concrete mixture, but do not exceed the manufacturer's recommended maximum initial set time.

814.03. Construction.

A. **Preparation of Base.** Excavate, shape, and compact the base to the required cross section and elevation. For concrete paved ditches, excavate to allow for installing and bracing forms. Dispose of surplus excavated material in accordance with subsection 205.03.P.

Prior to placing riprap, line the width of the ditch bottom, as shown on the plans, with geotextile liner. Do not use longitudinal seams. Begin placement of the geotextile liner at the down slope end of the ditch and shingle lap geotextile liner at least 2 feet. Extend geotextile liner under the HMA paved ditch to create at least a 1 foot overlap or as shown on the plans.

B. **Plain Cobble Ditch**. Place cobblestones or broken concrete on the prepared base with the longest dimensions parallel with the centerline of the ditch and smallest faces upward. Place the outer rows first, using the larger cobblestones or broken concrete. Place the cobblestones or broken concrete by hand and stagger the joints. Use a tamper of at least 30 pounds to uniformly bed cobblestones and broken concrete in the base.

Do not place crushed concrete within 100 feet of any water course (stream, river, county drain, etc.) and lake, regardless of the application or location of the water course or lake relative to the project limits.

C. **Grouted Cobble Ditch.** Begin work at the lowest elevation of the ditch. Place a layer of mortar on the prepared base to embed the lower half of the cobblestones or broken concrete and fill the spaces between the cobblestones or broken concrete with mortar. Place the cobblestones or broken concrete in accordance with subsection 814.03.B. Add and consolidate mortar to fill voids to within 1 inch of the top of the cobblestones or broken concrete, leaving the top surface exposed. Cure and protect the grout in accordance with subsection 814.03.E.5.

D. **HMA Paved Ditch.** Do not place HMA on frozen material. Place the HMA mixture adjacent to the proposed shoulder at the leveling course elevation on the prepared base to a thickness of at least 3 inches, and to at least 330 pounds per square yard, or as detailed on the plans. Cover the ditch bottom and side slopes. Feather down the top course mixture at the location of the paved ditch when the top course is constructed.

Place HMA using mechanical or hand methods, as approved by the Engineer. Compact the material using a roller, mechanical compactor, or hand tamper. Check the ditch grade during paving and provide positive drainage.

E. **Concrete Paved Ditches.**

1. **Forms.** Use wood or metal forms, straight and not warped. Forms must be braced to resist deflection during concrete placement. Provide forms with a vertical face equal to the required concrete thickness.

   If concrete placement is required below the ditch subgrade, the concrete may be cast neat to the earth, as approved by the Engineer.

2. **Steel Reinforcement.** Place steel reinforcement in accordance with subsection 802.03.C.

3. **Placing and Finishing Concrete.** Place concrete in accordance with the temperature and weather limitations specified in subsection 602.03.T. Wet the base immediately before placing concrete. Consolidate the concrete along the faces of the forms and next to the joints. Tamp the concrete surface to remove voids, strike off, and float to the required grade and cross section. Do not retemper the concrete.

   Round the edges and joints of the pavement to a ¼-inch radius with a finishing tool. Remove edging and finishing tool marks with a float and soft bristle brush.

4. **Joints.** Construct plane-of-weakness joints in accordance with subsection 803.03.D.

5. **Curing and Protection.** Cure the concrete by applying a transparent membrane curing compound specified in subsection 903.06.B.

814.04. Measurement and Payment.

Pay Item	Pay Unit
Ditch, Plain Cobble	Square Yard
Ditch, Grouted Cobble	Square Yard
Paved Ditch, HMA	Square Yard
Paved Ditch, Conc	Square Yard

Conduct concrete quality control as specified in section 1002. The Engineer will conduct quality assurance as specified in section 1003. The Department will pay for **Paved Ditch, Conc** based on the quality assurance results and this section.

The cost of concrete, grout admixtures, hot mix asphalt, geotextile liner, and cobble is included in the unit price of related paved ditch pay items.

The Engineer will measure and the Department will pay for either cobble or paved ditch items based on in place square yards.

Riprap used in conjunction with cobble and paved ditch items will be measured and paid for separately.

Section 815. LANDSCAPING

815.01. Description. This work consists of providing and planting trees, shrubs, and other plants, including replacements, classified as nursery stock. The Engineer may inspect, select and reject plants anytime until final acceptance.

815.02. Materials. Provide materials in accordance with the following:

Topsoil	917
Peat Moss	917
Compost	917
Fertilizer	917
Water	911
Nursery Stock	917
Mulching Materials	917
Balling Material	917
Wire	917
Hose	917
Stakes	917

815.03. Construction.

A. **Prepared Soil.** Use prepared soil for landscaping, consisting of a uniform mixture of topsoil, peat moss or compost, and fertilizer. Proportion the prepared soil so that 1 cubic yard of the prepared soil contains ¾ cubic yard topsoil, ¼ cubic yard of peat moss or compost, and chemical fertilizer as specified in subsection 917.10.A.1.

Thoroughly mix the component materials before final placement.

B. **Site Preparation.** Excavate holes, from the center of staked location, extending a minimum of 1.5 times the diameter of the root ball or bare root unless otherwise approved by the Engineer. Place the root ball on undisturbed soil.

Backfill the planting holes with prepared soil the same day they are dug.

C. **Preparation of Shipments.** Label all plants with correct genus, species and variety. Variations or substitutions must be approved by the Engineer.

Prepare nursery stock for shipment in accordance with ANSI Z60.1 requirements and enclose or cover during transportation to prevent drying.

1. **Balled and Burlapped Stock.** Complete ball and burlap operations before spring bud break. In the fall, do not begin balling until after the deciduous plants begin to harden off. Dig and pack balled and burlapped stock immediately before shipment. Maintain a firm root ball during

digging, packing and burlapping operations. Protect the root balls with wet straw, mulch, or other material approved by the Engineer. Protect the root balls from rain or sudden changes in the weather. The Engineer will not accept trees or plants if root balls are loose or broken.

2. **Container Grown Stock.** All container grown nursery stock must be healthy, vigorous, well rooted, and established in the container in which it is growing. Container grown nursery stock must have a well-established root system reaching the sides of the container to maintain a firm ball when the container is removed, but must not have excessive growth encircling the inside of the container.

3. **Bare Root Stock.** Dig and pack bare root stock without injuring or removing fibrous feeder roots. Maintain root moisture while transporting stock to the planting site.

D. **Seasonal Limitations.** Plant deciduous plants from March 1 to May 15 and from October 15 until the prepared soil freezes. If unusual planting conditions exist or if using container-grown material, the Engineer may alter these planting seasons.

Plant evergreen plants from March 1 to June 1.

E. **Care of Plants Before Planting.** Immediately following delivery and inspection at the project, heel-in plants with exposed roots in moist soil. Protect heeled-in plants and keep their roots moist until planted. Use a protected, shaded area, or a well-ventilated enclosure for the heeling-in grounds. The Engineer will reject plants if roots and surrounding soil are not kept moist.

Keep the roots of planting stock moist and protected.

Protect tree trunks and branches from injury. The Engineer will reject injured trees.

F. **Planting.** Do not begin planting until water for the plantings is readily available at the project. Water-in plants as they are planted. Water-in the prepared soil around the root ball and roots and firm the soil at intervals during the planting process. Saturate the prepared soil in the planting hole.

1. **Plants Located on Slopes.** Construct a berm of prepared soil half way around each plant on the down slope side to retain water.

2. **Balled and Burlapped Stock.** Level plant vertically and horizontally. Set balled and burlapped plant to a depth resulting in the root flare matching to the finished grade. Backfill and tamp the plant hole to half the required depth, and remove the burlap and lacing from around the trunk and the upper half of the ball. Water the prepared soil surrounding the plant and eliminate air pockets by tamping the soil at intervals under and around the ball. Do not damage the root ball during tamping operations. Continue to backfill the hole with prepared soil until the soil matches proposed grade after compaction. Bend the top one-half of the wire basket away from the root ball. Do not remove the entire wire basket.

3. **Container Grown Stock.** Remove container grown plants from the containers at the time of planting. Plant container grown stock in accordance with subsection 815.03.F.2. The Engineer may reject plants with broken, loosened, dry, or diseased root mass.

4. **Bare Root Stock.** Preserve the root growth on bare root stock. Do not prune the roots except to remove broken or damaged roots. Plant bare root stock to a depth resulting in the root flare matching finished grade and level plant vertically and horizontally. Do not bury root flare or expose roots. Spread roots over soil and hold in place during backfill placement. Compact disturbed ground until roots are stabilized and the plant is secured in place.

5. **Mulching.** After backfilling is complete, place four ~~six~~ inches of shredded bark unless otherwise shown on plans.

G. **Pruning Branches.** Use an arborist, certified by the International Society of Arboriculture (ISA), to prune branches before planting. Complete pruning according to ISA standards and to control disease and pest problems.

1. **Deciduous Trees.** Prune deciduous trees to remove dead wood and broken branches. Do not cut the primary leader back.

2. **Deciduous Shrubs.** Prune deciduous shrubs to remove dead wood and broken branches. Thin out canes and cut back or remove crossing branches, suckers and other growth. Prune shrubs to form an outline conforming to the general shape of the shrub type.

3. **Evergreen Trees and Shrubs.** Prune evergreens to remove broken or damaged branches. Do not shear.

H. **Clean Up.** At planting completion immediately clean, remove, and dispose of trash and surplus material off site. Repair ruts and turf damage resulting from the planting operations and re-establish turf in these areas in accordance with subsection 816.03 and as directed by the Engineer. Remove excavated material from the project and dispose outside the right-of-way in accordance with subsection 205.03.P. Complete clean-up before June 1.

I. **Watering and Cultivating.** In addition to required watering at time of planting, water and cultivate a minimum of five times during each growing season of the establishment period. Cultivate to remove grass, suckers, and weeds within the entire mulched area. The Engineer may add or subtract watering as conditions warrant. Notify the Engineer a minimum of 3 days before each watering and cultivating.

Cut the grass to a height of 3 inches within 12 inches of the perimeter of the mulch. Inspect the landscaping and remove insect infestations or disease damage to the plants and prune dead wood.

During the first and second watering of the second growing season, use a nitrogen-enriched solution as specified in subsection 917.10.A.2. Apply fertilizer before July 7.

During the first watering of the second growing season, remove and dispose of the guying material, identification tags, and inspection tags. During the final watering, replenish the mulch around the plants to a depth of 4 inches.

1. **Watering with Probe.** Water with a probe that:

    a. Is long enough to extend to the depth of the root ball;
    b. Is not greater than 1 inch in diameter;
    c. Has a closed pointed end with holes in the lower 4 inches; and
    d. Is equipped with a control valve for regulating water pressure and volume.

Insert the probe next to the root ball in at least three equally spaced locations around the plant. Adjust the pressure so little or no run-off occurs before placement of the required amount of water. After extracting the probe, close or fill entry holes in soil.

2. **Quantity of Water.** Use the following volumes of water for the specified plants:

    a. 35 gallons per watering for shade trees;
    b. 20 gallons for intermediate plants and evergreen trees;
    c. 5 gallons for shrubs; and
    d. A volume that saturates the soil to a depth of 3 inches for perennials and container grown stock.

3. **Watering and Cultivating Periods.** Water and cultivate during each of the following periods:

    a. From June 1 to June 15;
    b. From June 23 to July 7;
    c. From July 15 to July 29;
    d. From August 4 to August 18; and
    e. From September 5 to September 19.

J. **Bracing and Guying.** Brace or guy deciduous, evergreen and bare-rooted trees immediately after planting and according to the following:

1. For evergreen trees, use at least the following number of stakes:

    a. For trees higher than 6 feet, 3 stakes; and
    b. For trees 6 feet high or less, 2 stakes;

2. For bare-root stock, use at least 2 stakes;

3. For balled stock, use at least the following number of stakes:

    a. For low-headed trees, 1 stake (the Engineer may omit); and
    b. For deciduous clump trees, 2 or 3 stakes;

4. For balled stock, deciduous, but not low-headed trees use at least the following number of stakes:

    a. For caliper measurements greater than 4 inches, 3 stakes;
    b. For caliper measurements from 2 inches to 4 inches or at least 8 feet high, 2 stakes; and
    c. For caliper measurements less than 2 inches or less than 8 feet high, 1 stake.

Place one stake on the west side of the plant. If using two stakes, position them on opposite sides of the trunk and secure each stake to the trunk at two-thirds the height of the tree. If three stakes are required, use the tripod method of guying.

To avoid the root ball, anchor the tree by driving stakes no closer than 1 foot from the trunk. Drive stakes parallel to the trunk to within 4 inches of the lower main branches remaining after pruning. Maintain bracing stakes at a uniform height for similar plant or tree sizes throughout the project. Attach the top of the stake to the trunk with No. 11 wire and form a figure eight shape around the stake and trunk. Encase the wire loop that contacts the tree trunk with sections of hose that extends 6 inches beyond either side of the trunk. Twist guy wires so they do not restrict normal trunk growth and the trunk can move laterally 1 inch to 2 inches. For deciduous clumps, attach each stem to a support stake.

Use three No. 11 wires for the tripod method of tree guying. Encircle the trunk with one end of each guy wire. Encircle the trunk of deciduous trees just above the lower main branches and evergreen trees at a point two-thirds the height of the tree. Encase the wire encircling the trunk in hose that extends 6 inches beyond either side of the trunk. Fasten the other end of each guy to stakes equally spaced around the tree. Place the stakes away from the tree a distance equal to three-quarters the vertical distance from the ground to where the guys are fastened to the trunk. Notch the anchor stakes to prevent the wire from slipping. Drive stakes to at least 18 inches deep and at an angle so the tops point away from the tree.

For the duration of the contract, replace blown down trees or trees damaged by improper bracing or guying at no additional cost to the Department.

Brace or guy replacement plants, planted at the beginning of the second growing season. Maintain guying for one full growing season, and then remove.

K. **Period of Establishment.** The Engineer may inspect, select, and reject plants anytime until final acceptance.

The establishment period begins at the completion of the initial planting and extends through subsequent two growing seasons. A growing season is the months of June, July, and August.

Provide plants in a healthy growing condition at the start of the establishment period. The Engineer will inspect the plants at the end of the first and second growing seasons to determine acceptability. The Engineer will consider plants unacceptable if they are dead, missing, unhealthy, or otherwise unsatisfactory at the time of inspection, or not planted as specified.

Remove dead evergreen plants before winter, including the root ball, and backfill the hole at time of removal. Plant replacements in accordance with subsection 815.03.F, before May 10 of the following spring planting season. Water replacements planted after the first growing season, at the same time and in the same manner as the other plants receiving their second season watering.

Unacceptable plants, identified by the Engineer at the end of the second growing season do not require replacement. Remove these plants, root ball, and guying materials, and dispose off the project site. Backfill holes and restore grade at time of removal.

815.04. Measurement and Payment.

Pay Item	**Pay Unit**
Site Preparation, Max (dollar)	Lump Sum
(Botanical Name)	Each
Watering and Cultivating, First Season, Min (dollar)	Lump Sum
Watering and Cultivating, 2nd Season, Min (dollar)	Lump Sum

A. **Site Preparation.** The unit price for **Site Preparation, Max (dollar)** includes the cost of digging holes, providing prepared soil, backfilling holes, and disposing of excess excavated material.

B. **Plants.** The Engineer will measure plants by the units shown on the plans and methods specified in ANSI Z60.1. The Department will not pay for the pay item, **(Botanical Name)** until the plant is pruned, planted, watered, braced or guyed, and mulched.

The Department will not make additional payments for replacement plants.

C. **Watering and Cultivating.**

1. **First Season.** The Department will pay 20 percent of the lump sum price for **Watering and Cultivating, First Season, Min (dollar)** at the completion of each of the five watering and cultivating operations. Payment includes the cost of the following:

   a. One watering and cultivating operation;
   b. Providing and mixing fertilizer with water;

c. Removal and disposal of unacceptable plants including the root ball; and
d. Removal of all guying material at the end of the first growing season.

2. **Second Season.** The Department will pay for **Watering and Cultivating, 2nd Season, Min (dollar)** as a lump sum at the completion of the second growing season. The unit price of **Watering and Cultivating, 2nd Season, Min (dollar)** includes the cost of the following:

   a. Five watering and cultivating operations;
   b. Providing and mixing fertilizer with the water;
   c. Removal and disposal of unacceptable plants including the root ball; and
   d. Removal of all guying material at the end of the second growing season.

   For each unacceptable plant identified, the Engineer will calculate a 50 percent reduction in the unit price for the relevant **(Botanical Name)** pay item, and will process a negative assessment for each unacceptable plant for that amount.

3. **Supplemental Watering.** The Department will pay for supplemental watering, in addition to the 10 watering operations required, at 20 percent of the associated lump sum contract unit price. The Department will reduce the relevant lump sum contract unit price by 20 percent for each deleted watering.

Section 816. TURF ESTABLISHMENT

816.01. Description. This work consists of conducting soil tests, preparing the soil, and placing sod or seed and mulch to permanently stabilize disturbed areas as shown on the plans.

The following terms apply to this section.

Mulch Anchor. A glue type material sprayed over mulch to hold it in place.

Broadleaf Weed. Any dicotyledonous weedy plant. Broadleaf weeds include, but are not limited to, dandelion, clovers, thistles, and ragweed.

Compost. A mature and stabilized, humus-like material derived from the aerobic decomposition of yard clippings, leaves, and brush with a diameter less than 4 inches.

Dormant Seeding. Seeding placed in late November and December when plant growth ends for the season. Seeds are placed on unfrozen ground and mulched to lie dormant over winter and germinate the following spring.

Friable. Easily crumbled or pulverized soil.

Friable Condition. Soil in a "friable condition" is a crumbled, pulverized, worked-up, loosened, or cultivated soil, free of lumps and clods detrimental to seeding and sodding operations.

Humus. A brown or black material formed by the decomposition of vegetable or animal matter. The organic portion of soil, essential to fertility.

Hydromulching. Spraying mulch combined with water and mulch anchoring material onto the prepared seed bed.

Hydroseeding. Spraying seed and fertilizer combined with water onto the prepared seed bed.

Muck. Organic matter consisting of decomposed plant material accumulated under conditions of excessive moisture. If organic remains are not identifiable as plant form, it is considered muck.

Mulch. Material placed over seeding to improve germination by conserving moisture, moderating the soil temperature, and protecting the seed and soil from water and wind erosion.

Peat. Organic matter consisting of partially decayed plant material accumulated under conditions of excessive moisture. If organic remains are identifiable as plant form, it is considered peat.

Soil Test. Analysis report of soil nutrient content particle size, pH levels and organic matter.

Soil Tracking. Horizontal grooves on exposed slopes 1 on 3 or greater parallel to the contour of the land using tracked construction equipment.

Turf Reinforcement Mat. Three dimensional matrix of synthetic, or composite of synthetic and natural materials to permanently control erosion.

Target Weed. Weeds that the Engineer identifies for removal by spraying or other methods. Target weeds include any plant not included in the specified seed mix.

816.02. Materials. Provide materials in accordance with the following:

Compost 917
Topsoil 917
Fertilizer 917
Seed 917
Sod 917
Mulch 917
Mulch Anchoring 917
Mulch Blankets 917
Turf Reinforcement Mat 917
Weed Control 917
Water 911

816.03. Construction. Establish turf in accordance with this section, the MDOT *SESC Manual*, and as directed by the Engineer.

A. **Topsoiling.** Before placing topsoil, prepare the foundation. Provide, place, and spread humus bearing topsoil, compost, or both. Use topsoil from within the project limits or from off-site sources meeting requirements in 917.07. Obtain the Engineer's approval for topsoil placement prior to seeding.

1. **Preparation of Earth Bed.** Seven to ten days before preparing earth bed, including areas previously mulched or rye seeded for temporary erosion control, kill existing vegetation by spraying with the non-selective herbicide containing glyphosate.

   Construct the earth bed to the required grade and trim.

2. **Placing Topsoil.** Place topsoil meeting the requirements in 917.07. Cover areas requiring seeding or sodding with topsoil, compost, or both, except for slopes constructed of topsoil, muck or peat.

   Spread topsoil, compost, or both on the prepared areas at least three inches deep. Pulverize large clods and lumps. Rake out rocks with a diameter greater than two inches, roots, litter, and deleterious material. Dispose of raked out material in accordance with subsection 205.03.A.3 and subsection 205.03.P.

   Incorporate topsoil and compost into the upper 3 inches of the prepared earth bed. Do not work topsoil or compost if wet. Perform soil tracking prior to seeding on slopes steeper than 1:3. Leave horizontal soil impressions from equipment, across the face of the slope, as required by Engineer and noted in Standard Plan R-96 series for soil erosion control measures.

3. **Excavated Topsoil or Salvaged Topsoil.** The Engineer will direct stockpiling excavated or salvaged topsoil within the right-of-way. Maintain the stockpile in a weed free condition during the entire project duration.

B. **Chemical Fertilizer Nutrient.** Provide and place fertilizer as indicated below.

In areas requiring sod, uniformly apply granular fertilizer before laying the sod.

In areas to be broadcast or drill seeded, uniformly apply granular fertilizer to the prepared seed bed.

Apply the required class of fertilizer to the required locations at the following application rates:

1. For Class A fertilizer, evenly apply 176 pounds of chemical fertilizer nutrient per acre on a prepared seed bed.
2. For Class B fertilizer, evenly apply 120 pounds of chemical fertilizer nutrient per acre on a prepared seed bed.
3. For Class C fertilizer, evenly apply 80 pounds of chemical fertilizer nutrient per acre on established turf.

If using the hydroseeding method, constantly agitate the seed-fertilizer mixture. Do not disk or harrow after placement. Apply fertilizer mixed with seed within 1 hour of mixing.

Remove excess fertilizer from impervious surfaces adjacent to prepared seed and sod beds by sweeping back into beds. Do not use water to flush excess fertilizer into storm drains or surface water. Do not use fertilizer within 15 feet of waters of the state or on frozen or saturated soil.

C. **Seeding.** For each species provide seed varieties selected from the Qualified Products List. Do not broadcast or hydroseed in conditions that would prevent seed placement as required.

Apply turf and specialty seed mixtures in accordance with the mix ratios and seeding rates in Table 816-1 and Table 816-2.

1. **Permanent Seeding.**

   a. **Sowing.**

   When the seed bed has been properly graded, weeds eliminated, raked, harrowed, tracked and in a friable condition, sow seed with or following the application of fertilizer. Sow seed before applying mulch. Sow or resow the seed mixture, providing uniform coverage, at the rate specified in Table 816-1 or Table 816-2.

   Sow using mechanical drills, hydroseeders, or by broadcasting. In areas with 1:4 slopes, or flatter, use mechanical drills.

   The Department will allow hydroseeding on slopes steeper than 1:4 as approved by the Engineer.

   Empty the hydroseeder tank within 1 hour of introducing the seed and/or fertilizer to the tank. Dispose of tank contents that remain in the tank mixed with hydroseeder for longer than 1 hour.

   Broadcast in areas requiring resowing, or in areas not accessible to a drill or hydroseeder.

   The Engineer will visually inspect areas sown for uniformity of application. Resow areas that do not have an average of two seeds per square inch, at no additional cost to the Department.

   b. **Setting the Seed.** Lightly compact or rake areas sown by broadcast method to incorporate the seed into the top ½ inch of the topsoil. Immediately after setting the seed, mulch in accordance with subsection 816.03.E and subsection 816.03.F.

Table 816-1
General Roadside Seed Mix Selection Guide

Symbol for Turf Seed Mixture	Soil Type	General Location	Seed Rate	Salt Tolerance
TDS (Turf Dry Sandy)	Dry sandy to sandy loam	Rural or urban	220 lb/acre	Low to medium
THV (Turf Heavy Soil)	Heavy	Rural	220 lb/acre	Medium to high
TUF (Turf Urban Freeway)	All types	Urban freeways, blvds., service roads, city streets	220 lb/acre	Medium to high
TGM (Turf Medium to Heavy Soil)	Medium to heavy	All	220 lb/acre	Low
THM (Turf Loamy to Heavy)	Loamy to heavy	Residential and business turf	220 lb/acre	Low to medium

Table 816-2 Temporary Seeding Mixtures			
Symbol for Seed Mixture	**Soil Type**	**General Location**	**Seed Rate**
CR (Cereal Rye, <6 mos)	All	All	70 lb/acre
TSM 6/24 (Temporary seeding, 6–24 mos)	All	All	100 lb/acre
TSM 24+ (Temporary seeding, >24 mos)	All	All	200 lb/acre

2. **Temporary Seeding.** Obtain the Engineer's approval for temporary seeding. Place temporary seed only for erosion control or temporary soil stabilization. Do not temporarily seed slopes 1:3 or steeper after placing topsoil; permanently seed these slopes. Sow temporary seed in accordance with subsection 816.03.C.1. Before project completion, replace temporary seeding with permanent seeding as shown on the plans or directed by the Engineer.

3. **Dormant Seeding.** The Engineer will allow dormant seeding in limited areas. Obtain the Engineer's approval prior to dormant seeding. Dormant seed in accordance with subsection 816.03.C.1.

4. **Seasonal Limitations.**

   a. **Permanent Seeding.** Permanently seed the following locations during the specified periods:

      i. Southern Lower Peninsula. South of the north boundary of Township 20 North; April 15 through October 10.
      ii. Northern Lower Peninsula. North of the north boundary of Township 20 North; May 1 through October 1.
      iii. Upper Peninsula. May 1 through September 20.

   b. **Dormant Seeding.** Dormant seed the following locations during the specified periods:

      i. Southern Lower Peninsula. South of the north boundary of Township 20 North; after November 15, but not on frozen ground.
      ii. Upper Peninsula and Northern Lower Peninsula. North of the north boundary of Township 20 North; after November 1, but not on frozen ground.

   c. **Temporary Seeding.** Temporary seed in accordance with the seasonal limitations specified in subsection 816.03.C.4.a.

5. **Inspection.** The Engineer will inspect the seeded turf to ensure the end result is well established, growing, vigorous, and contains the species required by the seeding mixture.

The Engineer will approve slopes as the Contractor completes permanent restoration on cut slopes, embankment slopes, or portions of slopes. The Engineer will consider each cut or embankment slope, on each side of the roadway, separately for approval.

Complete weed control in accordance with subsection 816.03.I.

D. **Sodding.** Prepare the topsoil surface, provide and place the sod, and dispose of surplus material. Grade areas required for sodding to Class A slopes in accordance with subsection 205.03.N.

Immediately before laying sod, harrow the topsoil, at least 3 inches deep using a disk, spring tooth drag, spike tooth drag, or other equipment designed to condition the soil. Obtain the Engineer's approval for harrowing equipment. Harrow horizontally across the face of slopes.

Dampen the earth bed before laying the sod. Water the sod immediately after placement, in accordance with subsection 816.03.H. The Engineer will reject sod that has dried out.

Protect sod until placement. Lay sod within 24 hours after cutting. Do not handle sod with pitch forks, or dump from vehicles. Do not place frozen sod, or place sod on frozen soil. Unless otherwise approved by the Engineer, do not place sod in June, July, or August.

Place sod as shown on Standard Plan R-96 series. Stagger the transverse joints of the sod strips and lay parallel to the flow of water on slopes and in ditches. Place strips with tight joints. Lay sod starting at the base of the slope and work up the slope. Turn edges of sodded areas into the ground and cover with a layer of earth or shoulder material. Compact this material to allow the surface water to flow over the edge of the sod. Butt the edges of sod firmly against, and level with, paved surfaces.

Work from ladders or treaded planks if necessary to prevent the displacement of sod during sodding operations. Compact sod by tamping immediately after placement. Tamp to a smooth, even surface free of bumps and depressions. Finish the sodded surface to a lawn-like appearance. On slopes steeper than 1:3, use wooden pegs to secure the sod. Space pegs no greater than 2 feet apart and drive flush with the sod surface.

E. **Mulching.** Provide, spread, and anchor mulch material. Place mulch within one calendar day after seeding.

Do not mulch during winds that prevent placement and anchoring of the mulch.

Place mulch to allow sunlight to penetrate and air to circulate, but thick enough to shade the ground, conserve soil moisture, and prevent or reduce water and wind erosion.

Spread mulch over the surface to a uniform thickness with an application rate of 2 tons per acre. If the Engineer allows dormant seeding, spread the mulch with an application rate of 3 tons per

acre. After seed germinates and turf is established, apply herbicide in accordance with subsection 816.03.I.

Maintain the mulched areas and repair areas damaged by erosion, traffic, fire, or other causes, before partial or final acceptance. Replace displaced mulch. Repair or replace damaged mulch areas at no additional cost to the Department, unless otherwise provided by subsection 107.11 or section 208.

Replace and anchor mulch that blows away or becomes displaced, for reasons attributable to the Contractor, as directed by the Engineer and at no additional cost to the Department.

F. **Mulch Anchoring.** Provide a mulch anchoring material selected from the Qualified Products List. Spray mulch anchoring immediately after placing mulch. Do not spray if wind prevents the required placement of adhesive. Protect traffic, signs, structures, and other objects from the tackifier material. Immediately remove overspray.

Mix and apply latex base, recycled newsprint, wood fiber, guar gum, and other mulch tackifier material according to manufacturer's recommendations or as follows:

1. **Latex-Base.** Mix 15 gallons of adhesive, or the manufacturer's recommended adhesive volume, whichever is greater, with at least 250 pounds of recycled newsprint and 375 gallons of water.
2. **Recycled Newsprint.** Mix 750 pounds of recycled newsprint with 1,500 gallons of water.

3. **Wood Fiber.** Mix 750 pounds of wood fiber with 1,500 gallons of water.

4. **Guar Gum.** Mix 50 pounds of dry adhesive and at least 250 pounds of recycled newsprint with 1,300 gallons of water.

5. **Other Tackifiers.** Mix 150 pounds of dry adhesive, or the manufacturer's recommended adhesive volume, whichever is greater, with at least 250 pounds of recycled newsprint and 1,300 gallons of water.

G. **Mulch Blankets.** Provide, install, and anchor mulch blankets. Provide mulch blankets selected from the Qualified Products List. Place mulch blankets within one calendar day after seeding. Secure with net anchors. Place and anchor blankets in accordance with the minimum requirements specified in this subsection or the manufacturer's specifications, whichever is greater.

Overlap blanket edges by 2 inches and shingle lap blanket ends with a 6-inch overlap. Place net anchors along joint edges and blanket centerlines no greater than 2 feet apart. In waterways, shingle lap blankets with an overlap of 12 inches on the downslope edge. Place blankets on backslopes perpendicular to the roadbed. On foreslopes, lay the first strip adjacent to the road,

parallel to the road. Lay the remainder of the strips on foreslopes parallel or perpendicular to the road. If installing blankets from the top of the slope, do not allow them to free fall down the slope.

1. **High Velocity Blankets.** Use high velocity blankets on slopes of 1:2 or steeper and on ditch bottoms, including 12 inches up the front and back slopes.

   The Contractor may substitute high velocity blankets for mulch blankets at no additional cost to the Department.

2. **Mulch Blankets.** Use mulch blankets on slopes of less than 1:2, next to shoulders, and behind curbs. Place mulch blankets with the netting on top and mulch fibers contacting the soil.

   The Contractor may only use mulch blankets on ditch bottoms with ditch gradients no greater than 1.5 percent.

3. **Turf Reinforcement Mat (TRM).** Use turf reinforcement mats for long-term erosion protection and to permanently reinforce vegetation on slopes, ditches and shorelines.

Provide the manufacturer's published installation guidelines to the Engineer prior to installation. Install the TRM per the manufacturer's guidelines. Operation of equipment on the slope will not be allowed after placement of the TRM.

H. **Water.** Provide and apply water in accordance with section 911 to sodded and seeded areas at the required rates. The Engineer may adjust watering based on the season and weather conditions.

1. **Sod.**

   a. Water the earth bed with at least 3½ gallons per square yard before laying the sod;
   b. Apply at least 5 gallons per square yard after placing the sod;
   c. Apply an additional 5 gallons per square yard within 24 hours after placing the sod; and
   d. Apply 3½ gallons per square yard of sod, five times at three to five day intervals.

2. **Seed.**

   a. Water seeded areas at 3½ gallons per square yard, or as needed; and
   b. Continue watering regularly after germination begins to prevent seeds and seedlings from drying out.

I. **Weed Control.** Provide mowing and/or apply herbicides as directed by the Engineer. Submit the name, label, safety data sheets, and application rate of the herbicide to the Engineer, and obtain the Engineer's approval before applying.

To apply herbicides, use a commercial herbicide applicator, licensed in the State of Michigan, and certified by the Michigan Department of Agriculture in the required category. Use application procedures and materials in accordance with federal, state, and local regulations.

Use equipment adequate in size, to properly apply the herbicide in a timely manner, and that meets federal, state, and local requirements.

Spray target weeds in the newly seeded turf after the new turf grass is established and will withstand herbicide application.

Target weeds must be eliminated within 14 to 21 days after spraying. Apply additional weed control if the first application does not eliminate all target weeds at no additional cost to the Department. Control target weeds until final acceptance.

Preserve and protect property adjacent to the roadway or work area from injury. Repair damage arising from acts or omissions in the performance of the work, at no additional cost to the Department.

J. **Mowing.** Maintain turf at 6 inches or less during construction and until final acceptance. Mowing to be paid for as Weed Control.

K. **Acceptance.** Turf will be accepted when there is sufficient growth across 90 percent of the restored area to establish the turf bed and prevent soil erosion.

816.04. Measurement and Payment.

Pay Item	**Pay Unit**
Compost Surface, Furn, LM	Cubic Yard
Compost Surface, Furn, __ inch	Square Yard
Topsoil Surface, Salv, LM	Cubic Yard
Topsoil Surface, Salv, __ inch	Square Yard
Topsoil Surface, Furn, LM	Cubic Yard
Topsoil Surface, Furn, __ inch	Square Yard
Fertilizer, Chemical Nutrient, Cl __	Pound
Seeding, Mixture __	Pound
Sodding	Square Yard
Mulch	Square Yard
Mulch Anchoring	Square Yard
Mulch Blanket	Square Yard
Mulch Blanket, High Velocity	Square Yard
Turf Reinforcement Mat	Square Yard
Water, Sodding/Seeding	Unit
Weed Control	Acre

A. **Compost.** The Engineer will measure **Compost Surface, Furn LM**, at the source, before hauling to the project.

The Engineer will measure **Compost Surface, Furn, __ inch** in place.

B. **Topsoil.** The Engineer will measure **Topsoil Surface, Salv, LM** at the source, before placement at the final location.

The Engineer will measure **Topsoil Surface, Salv, __ inch** in place.

The Engineer will measure **Topsoil Surface, Furn, LM**, at the source, before hauling to the project.

The Engineer will measure **Topsoil Surface, Furn, __ inch** in place.

C. **Fertilizer, Chemical Nutrient.** The Engineer will measure **Fertilizer, Chemical Nutrient, Cl __**, of the type required, by the weight of nutrient in the fertilizer. The Engineer will determine the weight of chemical fertilizer nutrient for payment using the following formula:

$$T = W \times \sum N$$ Formula 816-1

Where:

T = The weight of chemical fertilizer nutrients applied,
W = Total fertilizer weight applied, and
N = The percentages of nutrients contained in the fertilizer used.

D. **Sod.** The Engineer will measure Sodding in place.

E. **Mulching Material.** The Engineer will measure the following types of **Mulch Blanket** in place:

1. Excelsior mulch blankets,
2. Straw mulch blankets,
3. High velocity excelsior mulch blanket, and
4. High velocity straw mulch blanket.

For straw mulch, provide the Engineer with tickets, in triplicate, at the time of delivery, showing the number of bales and weight of each load. Weigh the mulch on scales in accordance with subsection 104.01.F and subsection 109.01.B.6.

The unit price for **Mulch** includes providing and spreading straw mulch at the rate shown on the plans. If the Engineer allows dormant seeding, the Department will pay for mulching it at 1.5 times the unit price for **Mulch**.

The unit price for **Mulch Blanket, High Velocity** includes the cost of providing, placing, and anchoring the blankets.

The unit price for **Mulch Blanket** includes the cost of providing, placing, and anchoring the blankets. If the Contractor substitutes **Mulch Blanket, High Velocity** for **Mulch Blanket**, the Department will pay for the substitution at the unit price for **Mulch Blanket**.

The Engineer will measure **Mulch Anchori**ng in place. The unit price for **Mulch Anchoring** includes the cost of providing and spraying the tackifier.

F. **Turf Reinforcement Mat.** The Engineer will measure **Turf Reinforcement Mat** in place and includes the cost of providing, placing and anchoring mats. Overlapping of material will not be included in the measurement.

G. **Water, Sodding and Seeding.** The Engineer will measure **Water Sodding/Seeding** in units; each unit is equal to 1,000 gallons.

H. **Weed Control.** The Engineer will measure and pay for **Weed Control** in place 14-21 days after application.

I. **Seeding, Mixture.** The Engineer will measure **Seeding, Mixture** of the type required, in pounds of seed applied.

Section 817. RESERVED

Section 818. ELECTRICAL

818.01. Description. This work consists of providing operating electrical units; removing, salvaging, or disposing of existing electrical components; excavating, backfilling, restoring the site in accordance with section 816; and disposing of waste excavated materials. Complete this work in accordance with this section, section 819, section 820, the contract, and to the requirements of the NEC, the NESC, MIOSHA and the MDLARA for those items not identified in the contract.

Provide personnel experienced and qualified to perform the work required. Provide a licensed journeyman electrician supervisor on-site during installation and electrical construction.

818.02. Materials. Provide material in accordance with the following:

Granular Material Class II	902
Coarse Aggregate 17A	902
Conduit	918
Electrical Grounding System	918
Electrical Wire and Cable	918
Direct Burial Cable	918
Equipment Grounding Conductor	918
Handholes	918
Wood Poles	918
Concrete, Grade 3500	1004

A. **Conduit.**

1. **Direct Burial Application.** Provide a smooth surface conduit of one of the following types, for direct burial applications:

   a. Galvanized steel conduit;
   b. Smooth-wall, Schedule 80 rigid (PVC);
   c. Smooth-wall, coilable, Schedule 80 (PE); or
   d. Rigid fiberglass.

   Provide Schedule 80 conduit for traffic signal, ITS, and freeway lighting work.

2. **Jacking and Boring Application.** Provide Schedule 80 PVC or Schedule 80 polyethylene conduit for jacking and boring operations.

3. **Directional Boring Application.** Provide Schedule 80 coilable polyethylene conduit for directional boring.

4. **Encased Conduit Application.** Provide Schedule 80 conduit for encased conduit and provide Grade 3500 concrete made with 17A coarse aggregate in accordance with section 1004.

5. **Conduit on Structure Application.** Provide Schedule 80 PVC or rigid fiberglass conduit on structures.

B. **Conductors.** Provide the number of stranded copper conductors for overhead and underground conductors shown on the plans.

C. **Bracket Arm, Clamp On.** This work consists of completing one or more of the following work types at locations shown on the plans:

1. Furnishing and installing a 6 foot, 9 foot, 12 foot, 15 foot or 18 foot clamp on bracket arm.

2. Removing and disposing of an existing 6 foot, 9 foot, 12 foot, 15 foot or 18 foot clamp on bracket arm.

As applicable, this work includes removal or installation of clamp on bracket arm of the size specified on the plans, and any associated materials required to ensure a complete removal or installation, as specified for a location

Fabricate the bracket arm truss tubes from 2⅜ inch o.d. by 0.120 inch thick steel tubing meeting the requirements of ASTM A500/A500M for Grade B steel and subsection 105.10. Weld to a ⅜ inch thick steel mounting plate meeting the requirements of ASTM A36/A36M.

Weld ½ inch by 2 inch flat bar meeting the requirements of ASTM A36/A36M between bracket arm tubes to form the truss. Weld ¼ inch flat bar steel gussets between arm tubes and mounting plate. Complete welding in accordance with AWS D1.1 – *Structural Welding Code – Steel* and the contract.

Hot dip galvanize the bracket arm, all brackets and hardware after fabrication and welding according to ASTM A123/A123M and ASTM A153/A153M where applicable.

1. Steel Pole Mount. Use U-bolts meeting the size requirements below to attach bracket arms to steel poles. Use hex nuts, flat washers and lock washers to secure U-bolts. U-bolts and hardware must meet the requirements of ASTM A36/A36M steel.

   Use ⅝ inch rod U-bolts for pole diameters equal to or greater than 8½ inches but less 9⅛ inches. Use ¾ inch rod U-bolts for pole diameters equal to or greater than 9⅛ inches and equal to or less than 10¼ inches.

2. Wood Pole Mount. Fabricate the pole mounting plate from ⅜ inch thick steel plate meeting the requirements of ASTM A36/A36M and weld gussets to the arm tubes. There will be one

plate per arm tube. Each plate must incorporate two 0.562 inch diameter holes and one 0.687 inch by 1.50 inch keyhole for lagging to the wood poles.

818.03. Construction. Contact the MDLARA for electrical service inspection prior to energizing services.

A. **Conduit.** Build straight conduit runs. If the contract requires sweeps, use the largest radius that will fit the work space available for each sweep. Do not install more than 360 degrees of bends per conduit run between junction boxes per NEC code.

Provide conduit fittings and use methods of joining conduits, including conduit cement, in accordance with current NEC methods. If the NEC does not clearly describe the method, install the conduits in accordance with the manufacturer's recommendation. Obtain the Engineer's approval of installation methods before beginning work.

Attach end bells on the ends of conduits entering handholes to prevent damage to the cable.

Install continuous coilable conduit between handholes.

Extend conduit, not terminating in structures such as manholes, handholes, or foundations, 2 feet beyond pavement limit unless otherwise required. Plug unoccupied conduit.

Verify new conduit, inserted into existing manholes or handholes, does not interfere with racking, training of cables, or both. Do not disturb existing cables.

1. **Bends.** Bend conduit to the radii specified in the current NEC requirements. For conduit entering foundations or cable pole envelopes, provide conduit with factory bends.

2. **Excavation.** Excavate the conduit trench to provide an earth cover of at least 30 inches over the finished conduit.

3. **Drainage.** Grade the trench to provide drainage to handholes.

4. **Grades.** Stake conduit grades at no greater than 50 foot intervals, or as directed by the Engineer. Create a grade that slopes at least 4 inches over 100 feet to the lowest manhole or handhole, or from the middle of the conduit run toward both holes.

5. **Backfill.** Tamp the bottom of the trench to produce a smooth, flat or gentle sloping surface before placing the conduit. Backfill trenches outside the roadbed with excavated material, suitable for backfill, as determined by the Engineer. If excavated material is unsuitable, backfill the trenches with Class II granular material in accordance with section 204.

   Backfill trenches within the limits of the roadbed with Class II granular material in accordance with section 204.

6. **Supports.** Provide support for conduit running through holes built over or into existing duct. If ducts are built into an existing handhole, build a 4 inch tapered pocket into the wall. Build new service ducts into existing handholes without interfering with cable racking. Install required inserts.

7. **Clearances.** Do not allow conduit or concrete encasement to contact obstructions. Provide a vertical clearance of 9 inches, except provide at least 12 inches of clearance for conduit running parallel to water lines, gas mains, and other underground structures not part of the electrical system.

   The Engineer and the owner of the obstruction will determine the method of protection if the Contractor cannot provide the required 12-inch clearance.

   Exposed Conduit. For high voltage lines minimum clearance must follow MIOSHA, NESC and utility standards.

8. **Clearing.** After installing conduit runs, pull a mandrel 12 inches long, or shorter for conduit runs with bends, and with a diameter ½ inch smaller than the conduit. Attach a swab or cleaning device designed to clear the conduit, to the mandrel. Notify the Engineer before performing clearing work.

9. **Encased Conduit.** Encase conduit runs in Grade 3500 concrete. Space adjacent conduits, at least 1 inch apart and fill the space with concrete. Provide a conduit encasement with at least 3 inches of concrete around the conduit. If steel reinforcement is required, separate the reinforcing bars from the conduits with 2 inches of concrete. Provide at least 3 inches of concrete cover between the reinforcing bars and the surface of the encasement. Stagger conduit joints vertically.

   Use concrete, plastic, or bituminized fiber as separators, spacers, blocks, or supports that will remain in the finished concrete encasement. If installing 20 foot lengths of conduit, place spacers no greater than 7 feet apart. If installing 10 foot lengths of conduit, place spacers no greater than 5 feet apart.

   Prevent the conduit bank from floating after concrete placement by anchoring the bank to stakes at intervals no greater than 10 feet apart in firm soil and no greater than 5 feet apart in loose soil.

   Verify the concrete fully encases the conduit.

   a. **Tier by Tier Method.** Grade the trench and place a foundation of concrete at least 3 inches thick in the bottom of the trench. If steel reinforcement is required, place the concrete at least 5 inches thick with reinforcing bars in place. Lay the bottom tier of conduits, separated by spacers. Fill the space between conduits with concrete and cover

the conduits to the height of the next conduit tier. Construct succeeding tiers as specified for the first tier. Provide continuous placement of successive tiers of conduit with interruptions no greater than 45 minutes.

b. **Build-Up or Monolithic Methods.** Grade the trench and place masonry supports at intervals from 3 feet to 5 feet apart, or a foundation of concrete at least 3 inches thick in the bottom of the trench. If steel reinforcement is required, place the concrete at least 5 inches thick with the reinforcing bars in place. Place the conduit using plastic or concrete separators, to erect a rigid, self-supporting structure of conduit. Place the concrete to fill the spaces between the conduits completely, without damaging or displacing them.

   Provide notice to the Engineer prior to encasing the conduit in concrete.

   Place a coupling on the ends of conduit and install a removable plug. Sheet and brace the trenches as required. Support pipes or other structures exposed in the trenches as required to prevent damage.

10. **Directional Bore.** Bore by augering or jacking a steerable rod and pulling back a cone reamer that expands the soil that cuts a hole to the required diameter. Use a reamer with a diameter no greater than 2 inches larger than the conduit, as shown on the plans.

    The Contractor may use a drilling fluid of water and bentonite in directional drilling. The Contractor may use a polymer for lubrication in the drilling fluid.

    Place directional bore or drill equipment and supplies so they do not interfere with traffic or with the use of adjacent property. Locate equipment and supplies a minimum distance from the edge of pavement as directed by the Engineer. Place access pits in the location of handholes, at the boring termination points, as shown on the plans or directed by the Engineer.

11. **Jacking and Boring.**

    a. **Compaction Auger (packer, expander).** Auger a rotating stem under the roadway then pull back a series of graduated cones that displace the soil to obtain the required diameter.

    b. **Hydraulic Push Rods or Stem (pipe puller, packer).** Push rods or stems under the roadway with a hydraulic ram and pull a series of graduated cones that displace the soil to obtain the required diameter.

    c. **Other Methods.** The Engineer may approve other jacking and boring methods before construction. Do not jet, or use water or air ahead of the casing.

       The Contractor may use air rams longitudinally in the right-of-way, but may use under roadways only if approved by the Engineer.

Before jacking and boring, excavate a starter alignment trench to the elevation of the proposed conduit. Excavate a length of level trench at least 15 feet long for trenches up to 4 feet deep, and increase the trench length 5 feet for each additional 1 foot of depth.

Use guide rails, sills, or other positive alignment devices to start the crossing. Restrain drive rods against horizontal and vertical movement.

If using heads to develop an opening with a diameter greater than 2 inches, develop openings by increasing the head size in 1 inch increments.

If the highway is super-elevated, start the bore from the lower side of the pavement.

The Engineer will determine if conditions warrant the use of sheeting and bracing. Use sheeting and bracing for boring as directed by the Engineer if access pits are located within the 1:1 slope from the edge of paved surfaces or back of curbs.

Place access pits in the location of handholes, at the boring termination points, as shown on the plans or directed by the Engineer.

Provide the bore and jack record sheet or log if requested by the Engineer.

Control ground water entering the excavation from seepage layers and lenses or pockets of saturated material from inside the excavation using drainage, bailing, pumping, or other methods. Do not remove or disturb adjacent soil while draining the ground water.

If ordinary methods of drainage prove unsatisfactory, as determined by the Engineer, drain excavations as required.

12. **Record Drawings.** Within five days after completing conduit work, or installing working cables, provide a record drawing to the Engineer. Show deviations from the original plans. Measure the lengths from the inside walls of the handholes and the center of post foundations and cable poles.

B. **Electrical Wire and Cable.**

Permanently tag wires and cables, in manholes, handholes, and cabinets at the points of entrance, exit, splicing, and termination. Label new and affected wires and cables to indicate the source and use of each where above grade. Tag wires and cables in manholes and handholes with a stamped brass tag.

Provide wires and cables with an additional length of at least 10 feet in each manhole and handhole.

Seal cable ends where the plans show coiling of cable.

Cut and remove cables within handholes and manholes for abandoned underground cables as shown on the plans.

Permanently label detector wiring harnesses at the cabinet terminal strip with the source and use. Do not install service entrance conductors in handholes or vaults containing other wires or cables. Do not splice signal cables or interconnect cables for traffic signals unless indicated in the plans.

C. **Direct Burial Conductors.** Provide and install direct burial single conductors.

1. **Approval.** Unless otherwise specified in the contract, the Department is the agency responsible for maintaining direct burial conductor facilities. Provide certified test reports to the maintaining agency upon request.

2. **Installation.** Install direct burial conductors as shown on the plans and in accordance with the manufacturer's recommendations. Do not drag conductors on the ground. Do not splice conductors underground. Install conductors in continuous runs between manholes, handholes, or foundations.

3. **Location.** Install direct burial conductors parallel to the edge of pavement, along the shoulder edge, clear of guardrail locations. Place conductors in a straight line between visible reference points such as handholes or light standards.

4. **Excavation.** After compacting the subbase in the shoulder area to at least the elevation of the top of the base course, cut a trench along the shoulder edge for placement of the conductors.

   Remove rocks or other sharp objects from the trench. Lay the conductors in the trench.

   Install marking tape from 6 inches to 18 inches above underground conduit or cable. Do not install marking tape above jacked and bored conduit. The Department will provide the marking tape.

   Provide 3 feet of cover over direct burial cable installed outside the shoulder.

5. **Conductors Installed In Conduit.** If installing direct burial conductors in conduit, use clean conduit, free of rough spots.

   Avoid damage to insulation and conductor jackets during installation.

   When required, use lubricating compounds approved by the conductor manufacturer. Use nationally recognized testing laboratory listed non-injurious lubricants, on conduits, conductors, insulations, or jackets.

Provide slack in each run of cable.

Group multiple conductors, trained through a box, manhole or handhole, by circuit. Bundle them using cable ties, and support them to reduce pressure or strain on conductor insulation. Bend wire and cable in accordance with the manufacturer's recommended bending radius, during installation and in permanent placement.

Use a cable pulling apparatus with no sharp edges or protrusions.

6. **Testing.** Test direct burial conductors for continuity, shorts, and grounds after installation and backfill. Replace conductors that fail field tests with new conductors at no additional cost to the Department.

D. **Equipment Grounding and Bonding**. Provide and install grounding electrode conductors to provide a continuous grounding electrode system. Install grounding electrode conductors and connect to light standard bases, strain poles, pedestal bases, span wires, concrete-encased electrodes, ground rods, and service disconnects. For traffic signals, all equipment listed above which is associated with a single cabinet shall be bonded to a continuous connection from grounding electrode system. Equipment grounding conductors shall not be used to provide continuity of the grounding electrode system. Install equipment grounding conductors in the same raceway or trench as the current-carrying conductors and connect to the ground bus at the electrical source and to the grounding termination at the utilization equipment.

If installing conductors directly in earth with no conduit protection, the Contractor may use a bare conductor. Install the conductor at the same depth as a conductor installed in conduit.

If installing the conductors in conduit, use an insulated conductor, color-coded green in accordance with 918.04.A. Do not damage the conductor during installation.

E. **Handholes.** Provide and install, remove, salvage, reconstruct, abandon or adjust handholes, including covers and fittings as shown on the plans.

If the plans show existing cables maintained in new handholes, break and remove conduit and concrete encasements to the walls of the new handhole. Extend existing cables, train, rack, and support on the walls of the handhole.

1. **Remove or Abandon.** Remove handholes completely or abandon in accordance with section 204.

2. **Adjust.** Adjust handholes in accordance with section 403.

3. **Reconstruct.** Reconstruct handholes in accordance with section 403. Use existing frames and covers, unless otherwise directed by the Engineer.

4. **Installation.** Ensure handholes are flush with the pavement surface and 1 inch above grade outside paved areas. Install the frame and cover flush with the top of the handhole.

   Use cast-in-place or precast reinforced concrete handholes.

   Make the inner surface of reinforced handholes smooth. Sandblast castings. Cast handholes free of pouring faults, blow holes, cracks, and other imperfections. Cast handholes sound, true to form and thickness, clean, and finished.

   Provide and install cable racks and hooks.

   Plug unused conduit entrances and conduit openings for future use by others with removable plastic plugs or other plugs approved by the Engineer.

   Remove rubbish, construction debris, and water from handholes. Grout conduits from outside the handholes to inside the handholes.

5. **Excavation.** Excavate to the diameter and depth for installing handholes at locations shown on the plans.

6. **Drainage.** Cast drain holes at the bottom of the handhole. Provide drainage of handholes installed over underground conduits and on bridge decks.

7. **Backfill.** Install the handhole on Class II Granular Material. The Engineer will determine if excavated material meets the backfill requirement. Use Class II granular material if the Engineer determines excavated material does not meet the backfill requirement.

F. **Electrical Service Requirements.**

Unmetered Service. Provide NEMA type 4X service disconnecting means with stainless steel enclosures, unless otherwise required. The Department will provide means for padlocking the operating handles in the open or closed position. If directed by the Engineer, run conduit on the outside of the pole. Support the conduit using two-hole galvanized support brackets, spaced no greater than 3 feet apart. Bond the conduits and equipment as required by the NEC, utility company, and the contract documents. Use waterproof metal elbows with removable covers to enter and exit service disconnects and controllers.

Metered Service. Provide NEMA type 4X service disconnecting means with stainless steel enclosures, unless otherwise required. The Department will provide means for padlocking the operating handles in the open or closed position. On wood poles, connect the meter socket to the service disconnect using at least 1½-inch diameter Schedule 80 PVC or galvanized metal conduit. On steel poles, connect the wiring between the meter socket and the service disconnect on the inside of the pole. If directed by the Engineer, run conduit on the outside of the pole.

Support the conduit using two-hole galvanized support brackets, spaced no greater than 3 feet apart. Bond the conduits and equipment as required by the NEC, utility company, and the contract documents. Use waterproof metal elbows with removable covers to enter and exit meters, service disconnects, and controllers.

Electrical Service Removals. Contact the local power company shown on the plans to coordinate removal of metered service and power feed. Perform removal work in accordance with the NEC, the contract document requirements, and the local power company standards.

J. **Wood Pole.** Provide and install, relocate, or remove wood poles and associated hardware for supporting span wire and bracket arm mounted traffic signals, and guying the pole per span.

Tamp the earth replaced around new or relocated poles. Fill, tamp, and level holes after removing poles. Use hot dip galvanized turnbuckles, tension tie bars, and associated steel hardware in accordance with ASTM A153/A153M.

Set wood poles to the minimum depths specified in Table 819-1:

Table 819-1
Wood Pole Lengths and Depths

Pole Length	Depth
35 ft Class 4 pole	6 ft
40 ft Class 4 pole	6 ft
45 ft Class 4 pole	6½ ft
50 ft Class 4 pole	7 ft
55 ft Class 4 pole	7½ ft
60 ft Class 4 pole	8 ft

818.04. Measurement and Payment.

Pay applicable fees for electrical service inspection per MDLARA.

Pay Item	Pay Unit
Conduit, Rem	Foot
Conduit, Encased, (number), __ inch	Foot
Conduit, Directional Bore, (number), __ inch	Foot
Conduit, DB, (number), __ inch	Foot
Conduit, (type), __ inch, Structure	Foot
Conduit, (type), __ inch	Foot
Conduit, Schedule (number), __ inch	Foot
Conduit, Jacked Bored, (number), __ inch	Foot
DB Cable, 600V, 1/C# (size)	Foot
DB Cable, in Conduit, 600V, 1/C# (size)	Foot
DB Cable, in Conduit, Rem	Foot
Cable, Rem	Foot
Cable, (type), Rem	Foot

Cable Pole, (type), Disman ..... Each
Cable, P.J., 600V, 1, (size) ..... Foot
Cable, Sec, (volt), (number), (size) ..... Foot
Cable, Sec, (type), (number), (size) ..... Foot
Cable, Shielded, (volt), (number), (size), (type) ..... Foot
Cable, St Ltg, (volt), (number), (size), (type) ..... Foot
Cable, Equipment Grounding Wire, 1/C# (size) ..... Foot
Bracket Arm, Clamp On, _Foot, with _ Foot Rise ..... Each
Bracket Arm, Clamp On, Rem ..... Each
Hh, (type) ..... Each
Hh, (type), (size) ..... Each
Hh, (work) ..... Each
Metered Serv ..... Each
Metered Serv, Rem ..... Each
Unmetered Serv ..... Each
Unmetered Serv, Rem ..... Each
Wood Pole ..... Each
Wood Pole, Cl __, __ foot ..... Each
Wood Pole, Rem ..... Each
Serv Disconnect ..... Each
Serv Disconnect, Rem ..... Each
Serv Disconnect, Salv ..... Each
Wood Pole, Fit Up, (type) ..... Each
Conc Pole, Fit Up, (type) ..... Each
Steel Pole, Fit Up, (type) ..... Each

Unless otherwise required, the unit prices for the pay items listed in this subsection include the cost of excavation, granular material, backfill, and disposal of waste excavated material. Restoring the site in kind in accordance with section 816 will be paid for separately.

A. **Conduit.** The Engineer will measure conduit in place, from the inside walls of manholes, and the centers of handholes, post foundations, and cable poles.

The unit prices for **Conduit, Rem** include the cost of removing the type, number, and size of conduit shown on the plans.

The unit prices for **Conduit, (type), __ inch** and **Conduit, DB, (number), __ inch** include the cost of installing the type, number, and size of conduit shown on the plans, and installing marking tape.

The unit price for **Conduit, (type), __ inch, Structure** includes the cost of providing and installing the conduit components, hardware, and other appurtenances required.

The unit price for **Conduit, Jacked Bored, (number), __ inch** includes the cost of installing rigid metal, or Schedule 80 PVC conduit.

The unit price for **Conduit, Directional Bore, (number), __ inch** includes the cost of installing Schedule 80 polyethene conduit.

The unit price for **Conduit, Encased, (number), __ inch** includes the cost of the following:

1. Installing conduits,
2. Installing sheeting and bracing,
3. Removing boring pits, and
4. Filling voids.

The unit price for **Conduit, Schedule (number), __ inch** includes the cost of installing conduit approved for direct burial applications, as specified in subsection 818.02.A.1, and installing marking tape.

B. **Direct Burial Cable.** The Engineer will measure cables in place for the total length of the required conductors, single, multiple, or both.

The Engineer will measure direct burial cable, at grade, between centers of handholes, light standards, and poles.

The Engineer will not measure the following cable portions:

1. Looping,
2. Sag,
3. Trainers,
4. Splicing,
5. Racking,
6. Slack length, or
7. Length inside equipment.

The Engineer will measure the vertical length of cable from 2½ feet below grade to the pot head or service head at cable poles.

The unit prices for the relevant direct bury cable pay items include the cost of marking tape, bonding, tagging, and making splices, terminations, and connections.

The unit price for **DB Cable, in Conduit, 600 Volt, 1/C# (size)** includes the cost of pulling the cable in the conduit.

The unit price for **DB Cable, in Conduit, Rem** includes the cost of removing all cables from the existing conduit measured per lineal foot of conduit.

C. **Cable, Removal.** The unit prices for **Cable, Rem** and **Cable, (type), Rem** include the cost of dead ending, circuit cutting, work required to leave circuits operable, and disposing of the removed cables, wire, hardware, and other appurtenances.

The unit prices for other items of work include the cost of abandoning cables and conduit.

D. **Cable, Pole Dismantle.** The unit price for **Cable, Pole, (type), Disman** includes the cost of dismantling and off-site disposal of the following:

1. Riser pipe,
2. Cross arms,
3. Lightning arrestors,
4. Pot heads,
5. Cutouts,
6. Molding,
7. Weather cap,
8. Concrete encased bend, and
9. Other related materials.

E. **Cable, P.J.; Cable, Section; Cable, Shielded, and Cable, Street Lighting.** The Engineer will measure **Cable, P.J., Cable, Sec, Cable Shielded**, and **Cable, St Ltg**, of the type required, including the number and size of conductors, in place from centers of manholes or handholes and between wood poles, and will add 10 feet of cable for every handhole.

The unit prices for **Cable, P.J., Cable, Sec, Cable Shielded**, and **Cable, St Ltg**, of the type required, include the cost of the following:

1. Racking in manholes and handholes;
2. Bonding and tagging cables in manhole and handhole identifications;
3. Making splices and connections;
4. Cutting cable and re-splicing for service to traffic signals; and
5. Providing and installing the cable components, hardware, and other appurtenances required.

F. **Cable, Equipment Grounding Wire.** The Engineer will measure **Cable, Equipment Grounding Wire, 1/C# (size)** in a straight line between changes in direction and to the centers of light standards and the control cabinet. The Engineer will measure only one equipment grounding conductor if more than one circuit conductor run is installed in conduit.

The unit price for **Cable, Equipment Grounding Wire, 1/C# (size)** includes the cost of the following:

1. Installing grounding conductor in conduit,
2. Vertical conductors and required slack,

3. Bonding,
4. Tagging, and
5. Making splices and connections.

For traffic signals, the Department considers equipment grounding incidental to electrical work and will not pay for it separately.

G. **Electrical Service, Removal.** The unit price for **Elec Serv, Rem** includes the cost of returning the meter to the local utility company, and disposing of the removed concrete encased conduit, cables, hardware, and other appurtenances.

H. **Handholes (Hh).** The unit prices for handhole pay items include the cost of removing concrete encasement and conduit where new manholes or handholes access an existing conduit run as indicated on the plans, and installing cable racks and hooks.

The Department differentiates between **Hh, (type)** and **Hh, (type), (size)** based on the size, and type of material to construct the handhole.

The unit prices for **Hh, (type)** and **Hh, (type), (size)** include the cost of the frame and cover, ground rods, and treated wood foundations.

The Department will differentiate **Hh, (work)** pay items by the activities required to complete the work. The following pay items are **Hh, (work)** pay items:

1. **Handhole Adjust.** The unit price for **Hh, Adj** includes the cost of using existing frames and covers.

2. **Handhole Abandon.** The Engineer will measure **Hh, Abandon** by planned quantities. The unit price for **Hh, Abandon** includes the cost of removing the frame and cover, and breaking down the wall structure.

   The unit price for **Hh, Access** includes the cost of installing the following:

   a. Access handhole openings and covers in existing steel poles,
   b. Additional hardware,
   c. Reinforcing frames,
   d. Stainless steel screws, and
   e. Other material required to complete the work.

3. **Handhole Reconstruct, Remove, and Salvage.** The unit price for **Hh, Reconst** includes the cost of using existing frames and covers.

   The unit price for **Hh, Rem** includes the cost of removing the handhole.

The unit price for **Hh, Salvage** includes the cost of installing salvaged handholes.

I. **Service Disconnect.** The unit prices for installing, salvaging as required, and removing the relevant service disconnect pay items include the cost of the service disconnect (salvaged as required), fuses, brackets, hardware, cable, conduit, grounding (wire and ground rods), and other material required to complete the work.

The unit price for **Serv Disconnect, Rem** includes the cost of removing the disconnect, connectors, wiring, grounding, and ground rods and any other material required to complete the work.

The unit price for **Serv Disconnect, Salv** includes the cost of installing the salvaged service disconnect including all other material required to complete the work.

J. **Metered Service.** The unit prices for installing the relevant **Metered Serv** include the cost of material required by the local utility company and the NEC, providing and installing the meter, meter sockets, brackets, hardware, equipment supporting structure, cable, conduit, grounding and other material required to complete the work.

The unit price for **Metered Serv** includes the cost of returning the meter to the local utility company, storage, or disposal of removed material and all other material required to complete the work.

The unit price for **Metered Serv, Rem** includes the cost of removing the meter and meter socket and all other material required to complete the work.

K. **Unmetered Service.** The unit prices for **Unmetered Serv** and **Unmetered Serv,** Rem include the cost of material and labor required to install and remove, in accordance with NEC, the relevant unmetered service items. Providing and installing all brackets, hardware, equipment supporting structure, cable and/or wire, conduit, conduit fittings, and grounding is also considered included in the unit price.

The lump sum pay item, **Power Co. (Est. Cost to Contractor)** includes the cost of reimbursing the Contractor for payments made to the power company for providing electrical power at the locations shown on the plans. The Department will estimate the reimbursement costs to the Contractor and establish a lump sum price as shown on the plans. The Engineer will measure and the Department will pay the Contractor for Power Company invoices paid, as submitted to the Engineer.

The Contractor is responsible for scheduling and coordinating installation, and payment with the Engineer.

The unit prices for the relevant pay items include the cost of installing and other appurtenances required.

L. **Wood Pole.** The unit price for **Wood Pole** includes the cost of providing and installing pole markers, additional support, components, hardware, and other appurtenances required, and transferring wires from old to new poles.

The unit price for **Wood Pole, Cl __, __ foot** includes the cost of guying wood poles of the required class.

The Engineer will measure **Wood Pole, Rem** based on plan quantities in accordance with subsection 109.01.

The unit price for **Wood Pole, Rem** includes the cost of removing and storing, if required, poles, concrete, pole bases and hardware.

The unit price for **Wood Pole, Fit Up** includes the cost of arranging wire on poles, and providing and installing the components, wires, hardware, and other appurtenances required.

M. **Concrete Pole, Fit Up.** The unit price for **Concrete Pole, Fit Up** includes the cost of providing and installing the conduit, hardware, and other appurtenances required.

N. **Steel Pole, Fit Up.** The unit price for **Steel Pole, Fit Up** includes the cost of providing and installing the conduit, hardware, and other appurtenances required.

O. **Bracket Arm.** The unit price for **Bracket Arm, Clamp On, _Foot, with _ Foot Rise** includes all labor, equipment, and materials required to install a clamp-on bracket arm of the type specified including, hardware, fittings, connectors, ground wire, grounding, and other such material required to provide a complete bracket arm installation.

Bracket Arm, Clamp On, Rem includes all labor and equipment required to remove the bracket, hardware, and appurtenant items as required for a complete removal. **Bracket Arm, Clamp On, Rem** includes storage and disposal of removed materials.

Section 819. LIGHTING

819.01. Description. This work consists of providing operating lighting units; removing, salvaging, or disposing of existing lighting components; excavating, backfilling, restoring the site, and disposing of waste excavated materials. Complete this work in accordance with this section, section 816, section 818, section 820, the contract, and to the requirements of the NEC and the MDLARA for those items not identified in the contract.

Provide personnel experienced and qualified to perform the work required. Provide the on-site presence of a licensed journeyman electrician supervisor for the electrical system installation and during electrical construction. Contact the MDLARA for electrical service inspection and pay the applicable fees.

819.02. Materials. Provide material in accordance with the following:

Granular Material Class II	902
Coarse Aggregate 17A	902
Light Standard and Tower Anchor Bolts	908
Conduit	918
Electrical Grounding System	918
Electrical Wire and Cable	918
Direct Burial Cable	918
Equipment Grounding Conductor	918
Handholes	918
Light Standard Foundation	918
Light Standard	918
Luminaires	918
Wood Poles	918
Tower Lighting Unit	918
Concrete, Grade 3500	1004

819.03 Construction.

A. **Light Standard Foundation.**

1. **Remove.** Remove foundations in accordance with section 204.

2. **Installation.** Install light standard foundations as shown on the plans and the MDOT standard plans, as applicable. Drill foundation holes with an auger of the same diameter as the foundation. If the diameter of the auger cannot accommodate the planned foundation size, excavate the hole.

Do not use construction rubble, broken sidewalk, or other deleterious material in place of concrete in the foundation. The Engineer will not accept cracked or otherwise deformed foundations.

Obtain the Engineer's approval before placing foundations. Secure steel reinforcement, raceway conduits, and anchor bolts to each other in the augured hole to prevent displacement during concrete placement. Position and maintain the vertical and horizontal alignment of anchor bolt projections on top of the foundation. Space the anchor bolts on the bolt circle and parallel to the curb. Place the lower portion of the foundation without forms, if the soil is stable and the hole remains open. For unstable soil conditions, subject to cave-in, use forms for the entire depth of the hole for the foundation.

Install a #4 AWG bare bonding jumper as required by the NEC from steel reinforcement to pole

Form the upper 12 inches of the foundation and provide a uniform finish and a horizontal top surface.

Cure the foundations 7 days before installing bases and standards, or until minimum strength is achieved.

Backfill with Class II granular material. The Engineer will determine if excavated material meets the backfill requirement. If the Engineer determines excavated material does not meet the backfill requirement, use Class II granular material.

B. **Light Standard.** Install light standards, consisting of the light standard shaft and light standard arm, on new foundations, bridges, retaining walls, concrete barrier walls, frangible transformer bases, or other structures. Use new or salvaged materials.

1. **Submittals.** Submit Test Data Certifications and structural calculations for fabricated light standard and frangible transformer bases. Light standards must be listed for use.
   Before installation, submit a complete set of light standard fabrication and installation shop drawings to the Engineer for approval in accordance with section 104.

2. **Steel Light Standard Fabrication.**

   a. Weld steel light standards in accordance with subsection 707.03.D.10.b.. The Contractor may provide a shaft with one longitudinal welded joint and one transverse welded joint as shown on the plans.

      Ensure the welded area is free of flat spots, protuberances, cracks, discolorations, weld splatter, mill scale, or other imperfections that would mar the appearance or structural continuity of the welded area.

Provide circumferential butt weld splices and base connection welds using full penetration welds, ground flush. The Contractor may make the remaining portion of the longitudinal weld a partial penetration weld of at least 60 percent.

Provide a base that telescopes onto the shaft. Weld the base onto the shaft with two continuous electric arc welds; one weld on the inside of the base at the end of the shaft and one weld on the outside of the shaft at the top of the base.

b. Blast clean all components prior to galvanizing and galvanize in accordance with ASTM A123/A123M. Galvanize the bracket arm assembly separately.

3. **Aluminum Light Standard Fabrication.** Weld aluminum light standards in accordance with AWS D1.2, *Structural Welding Code — Aluminum*. As required by the Engineer, qualify welding procedures by testing qualification welds.

   Use two continuous welds made by the metal inert-gas method using aluminum filler metal meeting the requirements of AWS D1.2, *Structural Welding Code — Aluminum* to secure the cast aluminum anchor base to the lower end of the shaft.

   Provide a base that telescopes onto the shaft. Weld the base onto the shaft with two welds; one weld on the inside of the base at the end of the shaft, and one weld on the outside of the shaft at the top of the base.

4. **Shipping.** Provide clean shafts, free of scratches, dents, or similar disfiguring marks.

   Provide round standards with a uniform finish. Provide protection for the standards during shipping, handling, storage, and erection.

   Repair galvanized coating on steel light standard components, damaged in transportation, handling, or erection, in accordance with subsection 716.03.E, and at no additional cost to the Department.

5. **Light Standard Frangible Base.** Provide and install, or remove, light standard frangible bases.

   a. **Light Standard Frangible Base – Remove.** Remove the frangible base from the foundation. Take ownership of the removed frangible base.

   b. **Construction.** Install frangible transformer bases on concrete foundations. Finish the top surface of the concrete foundation level to within ¼ inch over 10 feet. Mount the frangible base directly on the concrete foundation and secure to the anchor bolts in accordance with manufacturer's specifications. Mount the frangible transformer base to the concrete foundation so the tabs project at least ½ the anchor bolt diameter beyond the

nut. Tighten the anchor bolts to a snug condition in accordance with subsection 810.03.N.2.

Tighten bolts connecting the pole to the frangible base to a snug tight condition in accordance with subsection 707.03.E.6.d. The lock washers must be fully compressed. Do not use bolt or nut covers.

6. **Equipment Ground Conductor.** Provide and install equipment grounding conductors in accordance with subsection 818.03.D.

7. **Light Standard Arm.** Provide and install, or remove, light standard arms, including bracket arm assemblies.

   a. **Light Standard Arm — Remove.** Remove light standard arms from the shaft. Take ownership of removed light standard arms.

   b. **Light Standard Arm — Remove and Salvage.** Remove and salvage light standard arms from the shaft. Transport light standard arms and hardware to a storage location, if required, as shown on the plans or otherwise directed by the Engineer.

   c. **Light Standard Arm.** Provide light standard arms on the required light standard shafts.

   d. **Light Standard Arm — Install.** Install light standard arms, provided by the Engineer, on the required light standard shafts.

   e. **Light Standard Arm — Install Salvaged.** Install light standard arms, salvaged in accordance with subsection 819.03.B.7.b, on the required light standard shafts.

      Replace parts of light standard arms, damaged during disassembly, handling, or storage operations, at no additional cost to the Department.

8. **Light Standard Shaft.** Provide and install, or remove light standard shafts. The light standard shaft includes the shaft, anchor base, associated hardware, and No. 10 wire extending from the fusing at the base of the pole to the luminaire. Install two feeder wires plus a ground wire for each luminaire. Waterlines are not allowed in street lighting standards or bases per NEC.

   a. **Light Standard Shaft — Remove.** Remove light standard shafts from the foundations. Take ownership of removed light standard shafts.

   b. **Light Standard Shaft — Remove and Salvage.** Remove and salvage light standard shafts from the foundations. Light standards and hardware should be stored in a secure and safe location approved by the Engineer.

c. **Light Standard Shaft — Single, Double, or No Arm.** Provide light standard shafts of the length required for single, double, or no arm light standards on the light standard foundations shown on the plans. If the plans show no arm light standard shafts, include the tenon at the top of the pole with the light standard shaft.

d. **Light Standard Shaft — Install.** Install light standard shafts, provided by the Engineer, on the required light standard foundations.

e. **Light Standard Shaft — Install Salvaged.** Install light standard shafts, salvaged in accordance with subsection 819.03.B.8.b, on the required light standard foundations.

Replace parts of light standard shafts damaged during reassembly, at no additional cost to the Department.

Replace parts of light standard shafts, damaged during disassembly, handling, or storage operations, at no additional cost to the Department.

9. **Installation Details.** Install the light standards to a vertical position for the upper one-third of the shaft with the bracket arm and luminaire attached. Erect bracket arms at right angles to the edge of pavement. Install light standards so the handhole faces away from oncoming traffic. On barrier wall and bridge installations, install the handhole facing, and accessible from, the roadway. Tighten anchor bolts in accordance with subsection 810.03.N.2.

Splice wire at access points, including handholes or access holes located on the shaft of the light standards. Loop direct burial wire up into the standards and make connections at the handholes.

Splice joints, insulate, and tape in accordance with the manufacturer's specifications for the type and cable voltage class. Use lug connectors or solder with non-corrosive flux for bonding joints. Use nationally recognized-approved plastic tape. Provide moisture-proof joints, insulated for the required voltage. Submit, to the Engineer for approval, samples of pre-insulated, solderless connectors, or mechanical connectors requiring special tools.

The Contractor may install luminaires with the light standards.

If installing luminaires with light standards, repair interior and exterior damage, caused by the Contractor, before operation, at no additional cost to the Department.

Ground the light standards in accordance with the current NEC requirements unless the local agency requirements exceed NEC grounding practices.

C. **Luminaires.** Provide and install, or remove and salvage luminaires. Use new or salvaged luminaires, as shown on the plans.

1. **General.** Provide luminaires of the type, size and lighting distribution pattern shown on the plans.

   Individually package luminaires for shipment.

2. **Submittals.** Provide the Engineer with a drawing showing a general diagram of the luminaire unit and the assembly and installation method.

   Provide a General Certification for luminaires.

3. **Luminaire.** Install luminaires of the size, type, and lighting distribution shown on the plans.

   a. **Luminaire — Remove.** Remove luminaires from the shaft and arm. Take ownership of the removed luminaires.

   b. **Luminaire — Remove and Salvage.** Remove and salvage luminaires from the shaft and arm. Transport the luminaires and hardware to a storage location, if required, as shown on the plans or otherwise directed by the Engineer.

   c. **Luminaire — Install Salvaged.** Install luminaires, salvaged in accordance with subsection 819.03.C.3.b, on the light standard shaft and arm shown on the plans.

      Replace parts of the luminaires damaged during disassembly, handling, or storage operations, at no additional cost to the Department.

4. **Installation.** Clean the luminaire reflector and glassware at time of installation in accordance with the manufacturer's recommendations.

D. **Tower Lighting Unit.** Construct tower lighting unit foundations in accordance with subsection 810.03.J and subsection 810.03.K. Provide and install tower lighting units with steel shafts and base plates, head frame assemblies, luminaire mounting rings, luminaires with ballasts/drivers and lamps, lowering devices, rodent screens, and related items to mount operating tower lighting units on foundations.

1. **Submittals.** Before fabrication, submit complete tower lighting unit drawings, including welding details, to the Engineer for approval. Submit calculations for the light standard design sealed by a professional engineer licensed in the State of Michigan, to the Engineer for approval. Include contract and job numbers.

   Submit a Test Data Certification covering the material used by the fabricator in the fabrication of the lighting installation. The Engineer may request tests on certified material.
   Submit the manufacturer's certification of the tower lighting unit design. Submit design calculations for the following:

a. Stress sized components of luminaire mounting rings,
b. Head frame assembly lowering devices,
c. Poles at joints, and
d. Sections through handholes and anchor bases.

2. **Fabrication.** Fabricate in accordance with Section 707, except as modified by this subsection.

a. **Welding**. Weld in accordance with subsection 707.03.D.10.b. Use submerged arc welding (SAW) for the longitudinal seam and circumferential welds. Ensure circumferential seams are full penetration groove welds.

Use full penetration groove welds on the longitudinal seams for the full length of the slip joint plus an additional 10 inches on both the male and female sections.

Grind weld reinforcement flush on the faying surfaces in the slip joint area for the entire length of the full penetration weld.

Ensure longitudinal welds other than in the slip joint area have a penetration of at least 60 percent.

Ensure base plate joints are full penetration single bevel groove welds with reinforcing fillet welds.

Provide non-destructive testing on welds as required. Ensure the personnel performing the ultrasonic testing (UT) and magnetic particle inspection testing (MT) are qualified as NDT Level II or Level III in accordance with ASNT SNT-TC-1A. The Engineer may have the opportunity to witness both MT and UT. Provide the Engineer with certified inspection reports from the ASNT inspector for welds tested.

b. **Magnetic Particle Testing.** Perform MT on welds in accordance with subsection 707.03.D.12, AWS D1.1 and ASTM E1444/E1444M.

c. **Ultrasonic Testing.** Use the shear wave or angle beam method to perform UT of 100 percent of the full penetration groove welds. Perform UT in accordance with ASTM E587, “Standard Practice for Ultrasonic Angle Beam Examination by the Contact Method” and AWS D1.1 “Structural Welding Code Steel,” except as modified by this subsection.

Use UT to evaluate the full penetration groove weld of the slip joints as cyclically loaded, nontubular connections. Evaluate materials thinner than $^{5}/_{16}$ inch in accordance with subsection 918.10.A.3.d. Before beginning inspection, establish the material thickness and the near field of the transducer to ensure detection of relevant indications with repeatable results. Evaluate flaws at the location of the sound path beyond the first leg, as specified in Table 6.7 of AWS D1.1. Establish the material thickness and near field of the transducer to ensure near field interference is not a factor in the testing.

d. **Equipment and Calibration.** Provide pulse-echo type ultrasonic units capable of generating, receiving, and amplifying electrical impulses for the required application. Use instruments equipped with a decibel or attenuation control. Calibrate instruments to ensure performance in the operation range. Qualify equipment as specified in Section 6.24 of AWS D1.1.

Provide 70 degree angle, piezo-electric type search units (transducers). The search unit may be comprised of two separate elements or one integral unit. Before calibrating for testing, verify the angle is within 2 degrees. Mark the exit point on the side of the transducer if different from the original exit point.

Provide a search unit with a 5.0 megahertz frequency and a diameter no greater than ½ inch. Calculate the near field using Formula 918-1 or Formula 918-2.

$$N = \frac{\left(D^2 \times F\right)}{\left(4 \times V\right)}$$ Formula 918-1

$$N = \frac{D^2}{\left(4\lambda\right)} \text{ when } \lambda = \frac{V}{F}$$ Formula 918-2

Where:

N = near field (in),
D = transducer diameter (in),
F = frequency (MHz),
V = velocity (in/sec x 106), and
λ = wavelength (in).

Use a suitable non-detrimental couplant. Perform calibrations using the same type of couplant as used to perform the inspection.

Before beginning the calibration procedure, ensure the operator verifies reject controls are turned off. Use of the reject controls may alter the amplitude linearity of the instrument and invalidate the test results. Calibrate the ultrasonic equipment in accordance with Section 6.24 of AWS D1.1.

e. **UT Acceptance Criteria.** Perform ultrasonic inspections in accordance with Section 6.13 of AWS D1.1. Perform the inspection beyond the first leg of the sound path to avoid the near field effects. If recording indications, note the leg of the sound path where the signal peaks. Calculate the sound path, or full V-path, using Formula 918-3.

$$SP(FVP) = \frac{2T}{Cos\angle}$$ Formula 918-3

Where:

$SP(FVP)$ = sound path, or full V-path, (in),

T = material thickness (in), and

$\angle$ = wedge angle.

The Engineer will accept or reject the weld in accordance with Table 6.3 of AWS D1.1 for $^5/_{16}$ inch material thickness, except the values shown in the table will be increased by 10 decibels to account for the thinner material tested and the modified frequency and diameter of the search unit.

Prepare the surface so that the transducer can be freely manipulated through the full surface area to evaluate the sound path. The Contractor may grind or use other means to clean the surface before inspection. Test in accordance with Section 6.25 of AWS D1.1. Calculate attenuation in accordance with Section 6.25.6.4 of AWS D1.1. Due to the short length of the sound path in thin materials, in most cases attenuation will not be a factor.

3. **Galvanizing.** Blast clean all components prior to galvanizing and galvanize in accordance with ASTM A123/A123M.

4. **Shipping.** Repair galvanized poles and related components, damaged in transportation, handling or erection, in accordance with subsection 716.03.E, at no additional cost to the Department.

5. **Installation.** Submit the manufacturer's pole assembly method and the Contractor's assembly method to the Engineer prior to beginning the work. After raising the luminaires to the normal operating position, verify the center of the apparent light source of each luminaire is within 2 feet of the nominal mounting height, as measured from the top of the foundation.

   Provide and erect the pole without field welds.

   Field assemble sectional poles before erecting on the foundations.

   During the final assembly, place the pole on aligned supports and apply force to seat each splice. Use axial or concentric compressive loading applied by hydraulic jacks, turnbuckles, or cable coffing hoists, to obtain the last 3 inches of the lap. To ensure required lapping of the joint, place a temporary circumferential mark outside the lower tube. Mark the lower tube a distance of 1½ times the diameter plus 12 inches from the top. Consider the joint tight, when the bottom of the overlapping section is within 12 inches, measured equally around the pole, of the temporary mark.

Erect the tower lighting unit so the horizontal offset at the top of the pole is within 4 inches of the true vertical position with respect to the base of the pole, and the offset at the midpoint of the pole is equal to or less than one-quarter of the offset position at the top of the pole.

Install and tighten anchor bolts in accordance with subsection 810.03.N.

Provide the pole alignment method to the Engineer prior to beginning work.

Install rodent screens at the base of the pole in accordance with section 909.11.

6. **Field Test.** After anchoring the tower shaft in place, notify the Engineer to arrange for MDOT personnel to witness the raising and lowering of the luminaire ring. Raise and lower the ring at least three times.

   Raise the ring to the working position and visually check to verify horizontal position. Energize the lamps and allow them to burn for at least 15 minutes before lowering. After lowering, inspect the ring for cable tension, levelness, hardware tightness, electrical connections, and power cord adjustments. Adjust the unit to provide the required operation of the lowering device and electrical system.

   If the operation of the ring requires more adjustments after the required tests, raise the ring until operational deficiencies are corrected.

   The Engineer will document successful completion of this field test before approving of the tower for operation.

819.04. Measurement and Payment

Pay Item	Pay Unit
Light Std Fdn	Each
Light Std Fdn, Rem	Each
Light Std, Frangible Transformer Base	Each
Light Std, Frangible Transformer Base, Rem	Each
Light Std Arm, (work)	Each
Light Std Arm, __ foot	Each
Light Std Shaft, (work)	Each
Light Std Shaft, Square, __ foot	Each
Light Std Shaft, 30 foot or less	Each
Light Std Shaft, __ foot to __ foot	Each
Light Std Shaft, 30 foot or less, Single Arm	Each
Light Std Shaft, __ foot to __ foot, Single Arm	Each
Light Std Shaft, 30 foot or less, Double Arm	Each
Light Std Shaft, __ foot to __ foot, Double Arm	Each

Luminaire ..... Each
Luminaire, (work) ..... Each
Luminaire, (watt)LED ..... Each
Luminaire, (watt)LED, Spec ..... Each
Luminaire, (watt)LED, Rectangular ..... Each
Tower Ltg Unit, __ foot (Number) Luminaire ..... Each
Tower Ltg Unit, Fdn Cased ..... Foot
Tower Ltg Unit, Fdn Uncased ..... Foot

Unless otherwise required, the unit prices for the pay items listed in this subsection include the cost of excavation, granular material, backfill, and disposal of waste excavated material. Restoring the site in kind in accordance with section 816 will be paid for separately.

A. **Light Standard Foundation.** The unit price for **Light Std Fdn** includes the cost of installing the anchor bolts, conduit, hardware, and other appurtenances required.

The unit price for **Light Std Fdn, Rem** includes the cost of removing and disposing of foundations.

B. **Light Standard Arm.** The unit price for **Light Std Arm**, of the size required, includes the cost of removing, installing, or salvaging light standard arms.

1. **Light Standard Shaft.** The unit price for light standard shaft pay items includes the cost of furnishing the light standard anchor bolt assembly and installing the light standard shaft on the foundation or frangible transformer base, and providing street lighting circuit cable cutting, and splicing.

2. **Luminaire.** The unit price for **Luminaire** includes the cost of the following:

   a. Luminaire;
   b. Lamp;
   c. Wiring;
   d. Other material; and
   e. Providing connections for making luminaire operational.

   The unit price for **Luminaire (watt),** includes the cost of providing and installing the complete luminaire, including the drivers or ballasts, lamps, and associated hardware and wiring.

C. **Tower Lighting.** The unit price for **Tower Ltg Unit, __ foot, __ Luminaire** includes the cost of the following:

1. Erection;
2. Aligning plumb;
3. Anchoring to the foundation;
4. Electrically wiring for operation; and

5. Testing of the unit.

The Engineer will measure **Tower Ltg Unit, Fdn Cased** and **Tower Ltg Unit, Fdn Uncased** vertically from the bottom to the top of the shaft. The unit prices for **Tower Ltg Unit, Fdn Cased** and **Tower Ltg Unit, Fdn Uncased** include the cost of providing and installing the anchor bolts, conduit, casing, hardware, and other appurtenances required.

Section 820. TRAFFIC SIGNALS

820.01. Description. This work consists of providing required components to complete the following: Provide complete, operating traffic and pedestrian signals, installing temporary traffic signal heads, span wires, strain poles, pedestals, illuminated case signs, traffic loops, and digital loop detectors and cabinets.

The installation of a temporary traffic signal head includes sufficient length of cable from the signal head to controller to accommodate signal head adjustment as required, lamps, fitting, wiring, line hardware, lashing rod, and all other material required to ensure a complete and operating traffic signal.

Furnish, fabricate and erect a traffic signal mast arm pole and mast arm including anchor base type steel mast arm pole, including mast arms, and other associated hardware required to complete the work. This work consists of providing all labor, equipment, and materials to install a mast arm pole foundation, including anchor bolts and other associated hardware required to complete the work.

A. Remove, salvage, or dispose of traffic and pedestrian signals, temporary traffic signals, span wires, mounting assemblies, strain poles, pedestals, illuminated or non-illuminated case signs, traffic loops, and digital loop detectors, controller, and cabinets;

The removal includes removing all temporary traffic signal heads and associated material to ensure a complete removal.

Covering (bag) or removing cover from (unbag) a traffic or pedestrian signal face assembly or a case sign face to accommodate maintaining traffic requirements associated with the Project. This work includes all material required to securely fasten the bag to the signal or case sign faces or to unbag the signal or case sign faces.

B. Relocate or re-install, on the project, existing traffic control equipment, traffic and pedestrian signals, mounting assemblies, strain poles, pedestals, illuminated or non-illuminated case signs, and digital loop detectors, controller, and cabinets removed;

C. Furnish all labor, equipment and materials required to remove an anchor, strut or pole guy including guy wire, anchor rod, anchor, strut, insulators, hardware, grounding and any other material required to complete the work. Disposal of this material is included.

D. Excavate, backfill, restore the site in kind in accordance with section 816, and dispose of excess or unsuitable material;

E. Take ownership of and properly dispose of removed material not identified for salvage; and

F. Store salvaged equipment in a protected and clean environment before installation on the project.

G. Provide all labor, equipment, and material required to install strain pole foundations and anchor bolts in accordance with subsections 105.10, 820.03.C and 908.14.C.

H. Provide all labor, equipment, and materials to install a steel casing when construction a steel strain pole or mast arm pole foundation. Use casings that conform with subsections 105.10 and 919.10.

I. Steel Strain Pole, Furnish, fabricate, and provide all labor, equipment, and materials necessary to erect an anchor base type (six bolt system) traffic signal steel strain pole per standard detail.

J. Remove mast arm(s), mast arm fittings and mounting brackets, ground rod(s), ground wire, service cable, polyvinyl chloride (PVC) conduits or galvanized rigid metal pipe risers, and other material required for a complete removal of the mast arm. This work includes disposing of removed materials, as directed by the Engineer.

K. Removing a mast arm standard (pole) including hardware, fittings, wiring, grounding, ground rod(s), conduit(s), and other material required for a complete removal of the mast arm standard (pole). This work also includes disposing of removed materials, as directed by the Engineer.

Provide qualified licensed individuals to supervise and complete this work.

The Department uses the abbreviations in Table 820-1 for traffic signals on the plans and in these specifications.

Table 820-1
Traffic Signal Abbreviations

Abbreviation	Definition
TS	Traffic signal, pedestrian signal, and flasher signal designated by a number
LTGA	Left-turn green arrow
RTGA	Right-turn green arrow
STGA	Straight-through green arrow
CS	Case sign
LED	Light Emitting Diode

820.02. Materials. Provide materials in accordance with the following:

Concrete Mix and Slurry 718
Conduit Material 819
Drilled Shafts 905
Anchor Bolts 908
Handholes 918
Casings ..... 105 and 919

Span Wire 921
Traffic Loop 921
Vehicular Traffic Signals and Mounting Assemblies 921
Pedestrian Signals 921
Traffic Signal Strain Pole..... 921
Traffic Signal Pedestal 921
Illuminated Case Signs 921
Non-Illuminated Case Signs..... 921
Digital Loop Detector..... 921
Steel Truss Arms..... 921
Service Disconnects..... 921
Concrete Grade 3500..... 1003

Secure the Engineer's approval for components of vehicular traffic signals and mounting assemblies not shown on the plans, or not specified in subsection 918.04. Used material (in like new condition) for the installation of a temporary traffic signal head is acceptable, upon approval by the Engineer prior to installation. All other appurtenant material must be new or as directed by the Engineer.

Provide material specifically designed and manufactured for the purpose of bagging and unbagging traffic signal heads and case signs. Previously used bag material is acceptable as long it meets the requirements of these specifications and is approved by the Engineer. Ensure bag material is dark in color, completely cover (mask) the traffic or pedestrian signal face or case sign face. When installed the bag must prevent visible light emission from the traffic or pedestrian signal face or case sign face, and completely obscure the case sign legend.

820.03. Construction.

A. **Foundations for Strain Poles, Mast Arm Poles, Pedestals and Traffic Signal Controllers.** Provide Grade 3500 concrete for the foundations of mast arm standards, steel strain poles, pedestals, or traffic signal controllers, in accordance with section 1003. Ensure all work is in accordance with sections 718, 818, 819, 820 and subsection 810.03, and the applicable signal construction details. Remove or install foundations as shown on the plans unless soil or site conditions require additional direction from the Engineer.

1. **Concrete Placement.** Compact concrete, during and immediately after depositing, using required tools. Ensure the concrete completely fills the form or excavation and fully encases the reinforcement and embedded fixtures. Produce a dense, waterproof concrete, free of voids and honeycomb.

   Do not use salt or other chemicals to prevent the concrete from freezing.

   Before installing poles, cure foundation concrete until concrete attains at least 70 percent of its required minimum 28-day flexural or compressive strength.

Do not use construction rubble, broken sidewalk, or other deleterious material in place of concrete. Replace cracked or otherwise defective foundations, as determined by the Engineer, at no additional cost to the Department.

Maintain temporary enclosures and other protection for concrete for at least 24 hours after removing the heating source.

2. **Construction.** Construct strain pole and mast arm foundations, cased or uncased, in accordance with subsection 810.03.J, and subsection 810.03.K.

   Locate the foundation as shown on the plans, unless otherwise directed by the Engineer.

   Obtain the Engineer's approval before placing foundations. Place the lower portion of the foundation without forms, unless the soil is subject to caving and the Engineer approves the use of forms. Use forms to shape the upper part of the foundation. Place concrete and finish the top surface of the foundation at the elevation shown on the plans or directed by the Engineer.

   Place base mount controller foundations using forms to shape the foundation as shown on the plans, and the signal details. Ensure the top surface of the controller foundation is horizontal, finished with a smooth straight surface, free of irregularities. Place the controller cabinet flush with the foundation. Ensure gaps between the foundation and the controller cabinet do not exceed ⅛ inch, or as directed by the Engineer.

   Place the concrete pad adjacent to the foundation in front of the controller cabinet door as shown on the plans, or directed by the Engineer.

   Place concrete in the forms in layers, compact, and finish the concrete to the thickness shown on the plans. Construct a continuous pad between expansion joints. After placing the concrete within forms, use a screed, guided by the forms, spread the concrete and compact.

   Protect foundations to prevent injury to pedestrians, motorists, and project personnel until installation of the standards.

   Install ground rods and ground wires. Connect the ground wire to the ground rod with a copper–clad, steel, solderless type clamp. Ensure electrically solid and mechanically secure connections.

3. **Backfill and Restoration.** Place backfill in compacted layers no greater than 12 inches thick. Compact layers to at least 95 percent of the maximum unit weight. Place backfill in accordance with section 206.

Restore disturbed areas in kind in accordance with section 816. Dispose of non-hazardous, contaminated material from drilled shafts, or other foundations as required.

a. The safety of the drilled shaft excavation, surrounding soil and material supported by the soil, and the stability of the sidewalls is the Contractor's responsibility. The hydrovac type method is allowed for the first 4 feet below grade with the remaining excavation method as determined by the Contractor and approved by the Engineer.

b. Do not leave drilled shaft excavations unfilled overnight unless the following conditions are met. Dry drilled shafts are drilled shafts where the flow rate of water into the excavation does not exceed 12 inches within 1 hour. Ensure all open drilled shafts have appropriately sized and attached covers. Ensure all open drilled shafts in soil are cased overnight.

    i. Dry Drilled Shafts. Temporary casing in dry drilled shafts is acceptable. However, the consequences and the associated costs are the responsibility of the Contractor. Consequences may include, but are not limited to, hole collapse after the temporary casing is withdrawn or the need to leave temporary casing in place when it was not indicated in the contract. No additional payment will be made when temporary casing used to keep the hole open overnight must be left in place.

    ii. Wet Drilled Shafts. Ensure wet drilled shafts have casing installed to the plan bottom of drilled shaft and the excavation within the casing must be stopped a minimum distance of 5 feet above the plan bottom of drilled shaft during the nighttime shutdown period. Excavation to the plan bottom of drilled shaft elevation must be made the following day, prior to pouring the concrete.

c. Water within drilled shafts in excess of 3 inches may be pumped provided the flow rate of water into the excavation is less than 12 inches per hour.

d. Using the tremie method is acceptable whether placing the concrete in a wet or dry drilled shaft excavation. Use a watertight tremie consisting of a tube of sufficient length, weight, and diameter (8 inch minimum inside diameter) to discharge concrete at the shaft base elevation. Ensure that the inside and outside surfaces of the tremie are clean and smooth. Pumped concrete must be placed in accordance with subsection 718.03.H.3.

e. Completely assemble a cage of reinforcing steel which consists of longitudinal and horizontal bars as indicated on the appropriate signal construction details. Provide a fully assembled steel reinforcement cage for inspection, after inspection of the excavation and prior to placement of concrete. Support the cage to control vertical displacement during concrete placement. Ensure steel reinforcement has a clear cover of 3 inches, unless otherwise noted, and may be adjusted to ensure proper clear cover.

f. Ensure anchor bolts and conduits are rigidly installed before the concrete is placed. Space

anchor bolts by means of a template. The center of the template must coincide with the center of the foundation.

g. Continuously cast concrete once placement has commenced, until shaft concrete casting is completed. Exposed concrete surfaces must be cast in forms and exposed concrete edges must be beveled ¾ inches.

B. **Casing Used with Strain Poles and Mast Arm Poles.** Install the steel casing as indicated on the plans or as directed by the Engineer. Install the steel casing in a manner that produces either a positive seal at the bottom of the casing to prevent the entry of water and/or soil into the shaft excavation or install the steel casing to the bottom of the foundation, whichever is less in length. Leave the steel casing in place. The steel casing may stop at the conduit entrance into the foundations. The top of the foundation may be formed separately without steel casing. Ensure a suitable method of compaction is employed to ensure the soil immediately outside the casing is compacted properly and complies with section 206 of the Standard Specifications for Construction.

C. **Traffic Signal Strain Pole.**

1. **Fabrication.** Fabrication plants must be certified in accordance with subsection 707.01.B.4. Weld in accordance with subsection 707.03.D.10.a.

a. Ultrasonically test full penetration butt welds of longitudinal seam welds in accordance with subsection 918.10. Except that for material thickness equal to or greater than $^{5}/_{16}$ inch, the accept/reject criteria will be according to AWS D1.1, Section 6.13 and Table 6.3.

b. Blast clean all components prior to galvanizing and galvanize in accordance with ASTM A123/A123M. Ensure that touch up required for any field drilled holes is in accordance with subsection 716.03.E.

2. **Installation.**

a. Orient the pole on the foundation so the handhole is located on the shaft, perpendicular to the resultant span direction for box spans, perpendicular to the span direction for diagonal spans, or as directed by the Engineer.

b. Ground and bond the pole as shown on the details.

c. Install the pole to orient the foundation and anchor bolts as shown on the plans, or directed by the Engineer. Hand holes shall face away from traffic.

d. Tighten anchor bolts to a snug condition in accordance with subsection 810.03.N.

e. Repair coating damaged in transporting, handling, or erection in accordance with subsection 716.03.E, at no additional cost to the Department.

f. Remove poles as shown on the plans. Completely remove the foundation of embedded steel pole or strain pole foundations, or as directed by the Engineer.

D. **Traffic Signal Mast Arm Pole and Mast Arm.**

1. **Fabrication.** Fabricate in accordance with section 707.

a. Attach the arm tube to a connection plate by a full penetration weld. Bolt the arm tube to the pole tube as shown on the plans. Control distortion of flange plates for flatness to assure full contact between mating surfaces in an unbolted, relaxed condition.

b. Weld the longitudinal seam at arm lap joint using a full penetration butt weld, a minimum of 36 inches long. When erected and in final position, the lap of the arm tubes cannot extend beyond the butt weld.

c. Ultrasonically test full penetration butt welds of longitudinal seam welds in accordance with subsection 918.10. Except that for material thickness equal to or greater than $^{5}/_{16}$ inch, the accept/reject criteria will be according to AWS D1.1, Section 6.13 and Table 6.3.

d. Blast clean all components prior to galvanizing and galvanize in accordance with ASTM A123/A123M. Ensure that touch up required for any field drilled holes is in accordance with subsection 716.03.E.

2. **Installation.**

a. Tighten anchor bolts in accordance with subsection 810.03.N. Ensure all installation procedures are witnessed by the Engineer.

b. When installing telescoping arm tubes, the lap of the arm tubes cannot extend beyond the butt weld.

c. Repair coating damaged in transporting, handling, or erection in accordance with subsection 716.03.E, at no additional cost to the Department.

E. **Span Wire.** Install span wire and messenger wire, guys, and required fittings as shown on the Plans or as directed by the Engineer.

If the Contractor requests to replace span wires that are shown on the plans to be installed or replaced by the utility company, the Department will consider this a change to facilitate ease of construction by the Contractor. Obtain prior approval from the utility company and perform work at no additional cost to the Department.

Obtain the approval of the Engineer before changing span wires.

Install new anchor guys on an angle as indicated on the plans, and include a porcelain strain insulator, unless otherwise required. Strain insulators are not required for strut guys.

F. **Guy, Remove**. Remove an anchor, strut or pole guy as indicated on the plans or as directed by the Engineer. Dispose of the removed material per section 204 and as directed by the Engineer. All work must comply with sections 818 and 820.

G. **Vehicular Traffic Signals, Pedestrian Signals, and Mounting Assemblies.** Obtain the Engineer's approval before removing existing TS equipment. Remove, install, or relocate LED signals and mounting assemblies. Remove the signals in stages, or when the Engineer determines alternate signals are adequate.

Provide LED signal modules that do not require special tools for installation. Ensure the LED modules fit into existing traffic signal housings without modifying the signal housing.

To install the LED module when retrofitting assemblies, remove the existing lamp, socket assembly, gasket, and reflector. Connect the LED module to the existing terminal block. The Engineer will not allow the use of screw-in type products.

Assemble TS heads and wire with fittings and color-coded wire in accordance with the specifications, and as shown on the plans.

Install new TS cable to existing TS heads as required due to the relocation or removal and installation of the TS controller and cabinet as indicated on the plans.

H. **Traffic Signal Head, Temporary**. Complete the work in accordance with sections 818 and 820, as shown on the plans, and as directed by the Engineer. Receive prior approval from the Engineer for any plan changes that may cause the placement of a temporary traffic signal head to be altered from the plans. Ensure modifications to the maintenance of traffic are approved by the Engineer. Remove and dispose of material in accordance with section 204 of the Standard Specification for Construction or as directed by the Engineer.

Complete bagging and unbagging of a traffic or pedestrian signal face assembly or a case sign face as shown on the plans, or as directed by the Engineer. Ensure the bag is securely attached to the unit and is maintained to meet stage construction requirements. Replace any bag which falls off the unit in accordance with the Special Provision for Quality Guidelines for Work Zone Traffic Control Devices, and at no additional cost to the Department.

Obtain prior approval from the Engineer for any plan changes that may cause the sequence of bagging and unbagging to be altered from the sequence shown on the plans. No additional compensation will be made for changes in the maintaining traffic staging that are made for the Contractor's convenience.

Dispose of all bag material, when the project is complete, in accordance with subsection 205.03.P of the Standard Specifications for Construction.

Hang the suspension TS in a vertical plane, face the heads as required, tighten lock nuts, and seal the top of the traffic signal with a construction grade silicone sealant.

If TS span adjustments by the local utility company are required to maintain the TS mounting height, coordinate with and provide at least 48 hours notice to the local utility company before starting work. For bracket arm signals, drill a hole in each standard, at each required location, to allow the cable to pass through the bracket-arm cable-entrance inlet. If required, drill two holes in the standard to allow the signal cable to loop into the lower bracket and out the upper bracket. Install the bracket arm signals vertically on the standards, face signals as required, and tighten the lock nuts.

Use only straight pipe threads for mounting assemblies fabricated from pipe.

Grease TS fittings and threads with a non-oxide type grease.

Use dead-end galvanized steel stand grips on guy wires.

Connect wires with Engineer-approved nylon insulated, solderless connectors, and tape.

Construct overhead lines in accordance with the contract. Refer to subsection 818.01 for those items not identified in the contract.

Take ownership of and properly dispose of removed material not identified for salvage. Store and dispose of removed material identified for salvage as directed by the Engineer.

Field paint TS bracket arms as required.

The Department will set the timing and offset of the signals as required unless otherwise indicated on the plans. The Department will put them into operation.

Install cables on poles or in ducts, as shown on the plans.

Install signal cables in a continuous length from the controller to each signal, unless otherwise shown on the plans. Pull the cable through the ducts without damage or kinks. Train cables near the top of the wall, manhole, or handholes. Bend cable without damage.

Bundle cables and secure to the wall of the manhole or handhole with galvanized A and J anchors, or an Engineer-approved equal. Provide supports at no greater than 2 foot spacing.

Extend the sheath of the traffic signal cables into the signal traffic heads and at least 1 inch into the controller cabinet. Strap traffic signal cables inside the controller cabinet. Identify cables within the cabinet with tags. Identify each traffic signal cable with a stamped brass tag in handholes.

Maintain present traffic signal service with minimal interruptions during traffic signal equipment relocation. Notify the Department 7 working days before relocating controllers or shutting down other traffic signals.

Provide pedestrian signal units with housing, visors, optical units, mounting brackets, lamps, and wiring.

Notify the Engineer and the local utility responsible for maintaining and operating, and providing power to the traffic signal, when adding or removing a traffic signal load from service.

Use only salvaged traffic signals previously installed as new traffic signals unless otherwise directed by the Engineer.

Bag and unbag temporary or final traffic and pedestrian signal displays and case signs as shown on the plans, unless otherwise directed by the Engineer.

I. **Traffic Signal Pedestal.** Provide traffic signal pedestal equipment for mounting traffic and pedestrian signals and pedestrian pushbuttons, as shown on the plans.

Ground and bond the pole as shown on the details.

Install the pole to orient the foundation and anchor bolts as shown on the plans, or directed by the Engineer. Hand holes shall face away from traffic.

Tighten top anchor bolt nuts to a snug condition in accordance with subsection 810.03.N.2.a.

Remove steel or concrete poles as shown on the plans. Completely remove the foundation of the embedded pole, strain pole, or pedestal pole/pushbutton pole, or as directed by the Engineer.

J. **Mast Arm, Remove.** Remove the mast arm, fittings, and associated materials as required for a complete removal. Dispose of the removed material as directed by the Engineer. Complete this work in accordance with sections 204, 818, and 820.

K. **Mast Arm Standard, Remove**. Remove the mast arm standard (pole), fittings, wiring, conduit(s), grounding, ground rod(s), and other material as required for a complete removal. Dispose of the removed material, as directed by the Engineer. Complete this work in accordance with sections 204, 818, and 820.

L. **Illuminated Case Signs.** Wire and ground internally illuminated LED and changeable message case signs with color-coded wire in accordance with the owner's specifications, and as shown on the plans.

Case signs must have an internal disconnecting means.

Assemble case signs with fittings wired.

Make wire connections with Engineer-approved solderless connectors.

M. **Non-Illuminated Case Signs.** Install, remove, or salvage non-illuminated case signs, including connecting hardware as shown on the plans.

N. **Electrical Wire and Cable.** Provide, install, and remove traffic signal wires and cable in accordance with section 818. Place marking tape from 6 inches to 18 inches above installed underground conduit or cable, except for jack and bored conduit or directional bore conduit. The Department will provide marking tape with the MDOT logo and telephone number on it.

O. **Conduit.** Provide, install, relocate, and remove direct buried and encased conduit and associated fittings in accordance with section 818.

The Contractor may submit an alternate method for conduit installation to the Engineer. Obtain the Engineer's approval for the alternate method before proceeding. Complete alternate conduit installation at no additional cost to the Department.

Join conduit pipe fittings and bends with an Engineer-approved PVC conduit cement.

To repair conduit under pavement, sidewalks, or earth, locate the conduit break, replace, and sleeve a new conduit section. Repair the concrete encasement, and restore the site. Use smooth wall, Schedule 80, rigid (PVC) conduit, or coilable, Schedule 80 (PE) conduit in accordance with section 819.

Locate conduit breaks using exploratory trenching techniques. Excavate a trench at least 1 foot on each side of the damaged conduit section to perform the rehabilitation.

Remove the section of broken conduit and replace with new conduit. Ensure the new conduit overlaps the existing conduit by at least 3 inches on each end. Connect the new and existing conduit using the manufacturer-recommended coupling and adhesive to form a waterproof seal. If existing conduit is encased, encase the new conduit in Grade 3500 concrete as specified in section 1004.

P. **Wood Pole.** Provide, install, relocate, and remove wood poles in accordance with section 818.

Q. **Traffic Loop.** The Engineer may change the location of traffic loops.

Center loops in traffic lanes unless otherwise shown on the plans, or directed by the Engineer. Place loops so they do not enclose joints, cracks, manholes, handholes, and other castings and ferrous material. Obtain the Signal Shop approval of loop location changes.

Cut slots in the pavement in accordance with subsection 603.03. Use high-pressure water and air to clean and dry slots before placing traffic loop wire. Remove dirt, dust, oil, and grease, from the slot, that could prevent bonding of the sealant. Remove dirt, dust, debris, and standing water from the adjacent pavement to avoid contaminating the slot during loop installation.

Lay wire in the slot, and reduce the sharpness of bends. Leave the wires loose in the slot.

Ensure wire in the loop and lead-in is free of kinks, abrasions, and punctures. Use required tools to prevent damage to the loop wire. Do not use screwdrivers and sharp instruments.

Use four turns of wire in loops no greater than 6 feet by 10 feet. Use three turns of wire for loops greater than 6 feet by 10 feet. Twist loop lead-ins with at least two turns per foot to prevent mechanical movement between individual wires.

Bring loop lead-ins into handholes at the time of loop installation and protect against damage. Tape the ends to prevent water from entering the wire.

If sealing detector loops, ensure the roadway surface and wire reservoir is dry. The roadway temperature must be at least 40 °F and rising for at least 4 hours after sealant application. Place sealant in accordance with the manufacturer's instructions. Do not mix sealant with solvents, thinners, or other solids. Apply sealant when the ambient temperature is from 40 °F to 100 °F. Allow the sealant to cure before placing a layer of paving over the loops.

Place the loop wires at least ½ inch below the surface of the slots in the pavement, and fill the slots with sealant. If required, use soft restraints to hold the wires ½ inch below the surface. Place the sealant flush with the road surface. Before the sealant sets, strike-off surplus sealant. Do not use solvents to clean sealant off pavement. The Engineer will determine when to open the sealed areas to traffic.

Provide at least a 1 megohm resistance to ground to the loop and lead-in. In the absence of circuit grounds, provide a temporary ground for testing by driving a ground rod.

Test each loop for continuity at the handhole, and ensure the resistance does not exceed 1.5 ohms.

R. **Digital Loop Detector.** Install a rack mounted, digital loop detector in the controller and cabinet with the number of channels shown on the plans, or as directed by the Engineer.

S. **Site Restoration and Waste Disposal.** Dispose of waste as directed by the Engineer, and in accordance with subsection 205.03. Restore the site in accordance with 816.

T. **Handholes.** Install precast concrete handholes of the design and dimensions shown on the plans.

U. **Traffic Signal Controller and Cabinets.** Secure the traffic signal controller cabinet as shown on the plans for pole or base mounted cabinets.

Provide the Department two copies of the manufacturer's specifications for the controller, and outline the special details, features, or changes in design operation. Provide the Department one complete wiring diagram, parts list, assembly drawings, and maintenance manual for the controller.

Provide traffic signal controllers capable of accepting the required timing.

Ground traffic signal installations with solid state controllers at each span contact pole. Ensure the ground has a measured resistance no greater than 10 ohms.

V. **Warning Sign.** Install or remove warning signs equipped with traffic signal sign opticals, including sign supports, as shown on the plans. Provide a sign legend and sign optical lens size as shown on the plans and in accordance with the MMUTCD, Special Sign Details, and signal construction details.

Install or remove sign optical lenses on existing signs as shown on the plans or directed by the Engineer.

W. **Removing and Salvaging TS, Antenna.** Remove TS antennae or install salvaged TS antennae, removed from the project, as shown on the plans or directed by the Engineer.

X. **Removing Emergency Pre-emption.** Remove emergency pre-emption or install salvaged emergency pre-emption, removed from the project, as shown on the plans or directed by the Engineer.

Y. **Steel Truss Arms.** Remove or install steel truss arms and related equipment as shown on the plans or directed by the Engineer. Install truss arms following the installation of other traffic signal equipment, including span wire, signal heads, and strain poles, to accommodate truss arm adjustments, as directed by the Engineer. Install truss arms in accordance with the NEC and NESC.

Where adjustment of steel truss arms is required, take responsibility for the premature installation of the truss arms at no additional cost or time to the Department.

820.04. Measurement and Payment.

Pay Item	Pay Unit
TS, (number) Way (type) Mtd	Each
TS, (number) Way (type) Mtd, Salv	Each
TS, (number) Way (type) Mtd, (arrow type)	Each
TS, (number) Way (type) Mtd, (arrow type), Salv	Each
TS, 4th Level (arrow type)	Each
TS, 4th Level (arrow type), Salv	Each
TS, (number) Way (type) Mtd (LED)	Each
TS, (number) Way (type) Mtd, (type) (LED)	Each
TS, (number) Way (type) Mtd (LED) Retrofit Assembly	Each
TS, (number) Way (type) Mtd, (type) (LED) Retrofit Assembly	Each
TS, 4th Level, __ (LED)	Each
TS, 4th Level, __ (LED) Retrofit Assembly	Each
TS, 4th Level Arrow, Rem	Each
Louver	Each
TS Head, Adj	Each
TS, Head, Temp	Each
TS Face, Bag	Each
TS Face, Bag, Rem	Each
TS, (type) Mtd, Rem	Each
TS, Pedestrian, (number) Way (type) Mtd	Each
TS, Pedestrian, (number) Way (type), Salv	Each
TS, Pedestrian, (number) Way (type) Mtd (LED)	Each
TS, Pedestrian, (number) Way (type) Mtd (LED) Countdown	Each
TS, Pedestrian, (type) Mtd, Rem	Each
TS, Lens, Pedestrian Sym	Each
TS, Lens	Each
TS, Lens, Rem	Each
TS, Lens, Salv	Each
TS, Antenna	Each
TS, Antenna, Rem	Each
TS, Antenna, Salv	Each
Pushbutton	Each
Pushbutton and Sign	Each
Pushbutton, Rem	Each
Conc Pole, Rem	Each
Steel Pole, Rem (Embedded)	Each
Strain Pole, Steel, Anchor Base, __ foot	Each
Strain Pole, Steel, Anchor Base, __ foot, Salv	Each
Steel Pole, Rem	Each
Strain Pole, Steel, Anchor Fdn	Each
Strain Pole Fdn, Cased	Foot
Strain Pole Fdn, Uncased	Foot

DRAFT – July 2020

Strain Pole Fdn, 6 Bolt ..... Foot
Strain Pole, Steel, 6 bolt, __ foot ..... Each
Mast Arm Pole, Cat__ ..... Each
Mast Arm, __Foot, Cat ..... Each
Mast Arm Pole Fdn, 6 Bolt ..... Foot
Mast Arm, Remove ..... Each
Mast Arm Std, Rem ..... Each
Fdn, Rem ..... Each
Pedestal, Fdn ..... Each
Pedestal Fdn, Rem ..... Each
Pedestal, Alum ..... Each
Pedestal, Alum, Salv ..... Each
Pedestal, Rem ..... Each
Pedestal, Pushbutton, Alum ..... Each
Pedestal, Pushbutton, Rem ..... Each
Casing ..... Foot
Case Sign, (number) Way, __ inch by __ inch ..... Each
Case Sign, (number) Way, __ inch by __ inch, Salv ..... Each
Case Sign, Disappearing Legend, __ inch by __ inch ..... Each
Case Sign, Disappearing Legend, __ inch by __ inch, Salv ..... Each
Case Sign (LED), (number) Way, __ inch by __ inch ..... Each
Case Sign (LED), (number) Way, __ inch by __ inch, Retrofit Assembly ..... Each
Case Sign (LED), Changeable Message, (number) Way, __ inch by __ inch ..... Each
Case Sign Panel ..... Each
Case Sign, Rem ..... Each
Case Sign, Salv ..... Each
Case Sign Panel, Rem ..... Each
Case Sign Panel, Salv ..... Each
Case Sign, (number) Way, __ inch by __ inch, Non-Illuminated ..... Each
Case Sign, Non-Illuminated, Salv ..... Each
Case Sign, Non-Illuminated, Rem ..... Each
Keep Rt Sign, Rem ..... Each
Span Wire ..... Each
Span Wire, Rem ..... Each
Guy, Rem ..... Each
Anchor Guy ..... Each
Strut Guy ..... Each
Pole Guy ..... Each
Traf Loop ..... Each
Traf Loop, (type) ..... Each
Digital Loop Detector ..... Each
Loop Detector, Rem ..... Each
Digital Loop Detector, Salv ..... Each
Riser ..... Each

DRAFT – July 2020

Riser, Rem ..... Each
Power Co. (Est Cost to Contractor)..... Dollar
Conduit Repr, Under Pavt ..... Foot
Conduit Repr, Under Sidewalk or Earth ..... Foot
Controller and Cabinet, Rem..... Each
Controller and Cabinet, Salv ..... Each
Controller Fdn, Base Mtd ..... Each
Controller Fdn, Rem..... Each
Cabinet, Rem ..... Each
Cabinet, Salv..... Each
Warning Sign..... Each
Warning Sign, Rem ..... Each
Sign Optical (LED) ..... Each
Bracket, Truss, with __ foot Arm ..... Each
Bracket, Truss, Rem ..... Each
Emergency Pre-emption, Rem..... Each
Emergency Pre-emption, Salv ..... Each
Sign Optical, Rem ..... Each

A. **General.** Unless otherwise required, the Engineer will measure traffic signal pay items based on plan quantities in accordance with subsection 109.01.A.

Pay items specified in this subsection, except removal items, include all components required to provide complete and functioning traffic signals.

In addition to specific work for individual pay items, the unit prices for work specified in this subsection include the following:

1. Excavation and backfill, including backfilling for removed items;
2. Disposal of waste material;
3. Storage of salvaged material;
4. Placing marking tape; and
5. Changes in the method of conduit installation requested by the Contractor.

Restoring the site in kind in accordance with section 816 will be paid for separately.

B. **Traffic Signals.** The unit prices for relevant pay items for installing, salvaging as required, and removing traffic signals include the cost of storing and disposing of materials, and providing and installing traffic signal heads, lamps, brackets, hardware, cable, and other material required to complete the work.

The unit prices for the relevant traffic signal pay items include the cost of installing new TS cable from the TS head to the TS controller and cabinet as shown on the plans; coordinate with local utility companies in TS span adjustments; and stemming signal heads to maintain a minimum of

17 foot under-clearance, from bottom of signal bracket to road surface for each span wire mounted signal head. Red signal faces will be at the same elevation in a given direction.

The Engineer will measure, and the Department will pay separately for **Louvers**, based on the number of louvers required for a signal face.

The unit price for **TS, Rem** includes the cost of removing and disposing of traffic signals and pedestrian signals.

The unit price for **TS, Pedestrian** includes the cost of pedestrian traffic signal heads, including salvaged heads.

The unit price for **TS Lens, Pedestrian Sym** includes the cost of providing and installing the new lenses.

The unit price for **TS Lens** includes the cost of installing traffic signal lenses.

The unit price for **TS Lens, Rem** includes the cost of removing traffic signal lenses.

The unit price for **TS Lens, Salv** includes the cost of installing salvaged traffic signal lenses.

The unit price for **TS Head, Adj** includes the adjusting of either a permanent or temporary traffic signal head, wiring, fittings, line hardware, lashing rod, lashing and/or unlashing of traffic signal cable, and all other material required to ensure a complete and operating job.

The unit price for **TS Head, Temp** includes furnishing, installing, removing a temporary traffic signal head, and all material required to ensure a complete and operating job, as indicated on the plans or as directed by the Engineer.

TS Face, Bag and **TS Face, Bag, Rem.** The Engineer will measure, as a unit, each traffic or pedestrian signal face regardless of number of signal indications, and each case sign face.

The unit prices for **Pushbutton** and **Pushbutton and Sign** include the cost of providing and installing pushbutton and sign.

The unit price for **Pushbutton, Rem** includes the cost of removing the pushbutton, sign, and cables.

The Department will pay separately for **Traffic Signal Retrofit Assembly**, but the cost of removing the existing lamp, socket assembly, gasket and reflector, and installing the LED traffic signal module without modifying the existing signal housing is included in the unit prices for relevant traffic signal pay items.

C. **Strain Poles.** The unit price for **Strain Pole, Steel, Anchor Base** includes the cost of installing steel standards, grounding and bonding, including salvaged standards, on the foundation.

The unit price for **Strain Pole, Steel, Anchor Fdn** includes the cost of form work for foundation excavation, constructing foundations and installing conduit bends, grounding, and grounding rods.

The Engineer will measure **Strain Pole Fdn, Cased** and **Strain Pole Fdn, Uncased** vertically from the bottom of the foundation and shaft to the top of the shaft. The unit prices for **Strain Pole Fdn, Cased** and **Strain Pole Fdn, Uncased** include the cost of installing conduit, grounding, grounding rods, and steel casing for foundation excavation.

The unit price for **Steel Pole, Rem** includes the cost of removing the steel pole, hardware, fittings, wiring, grounding, ground rods, and conduits.

The Engineer will measure **Steel Pole, Rem (Embedded)** as shown on the plans in accordance with subsection 109.01.A. The unit price for **Steel Pole, Rem (Embedded)** includes the cost removing the steel pole with foundation, hardware, conduit, and other material required to complete the work, and backfilling the hole with granular material.

Strain Pole Fdn, 6 Bolt includes disposal of removed material in the pay item. Disposal of removed material must comply with section 204 or as directed by the Engineer.

Strain Pole, Steel, 6 bolt, __ foot includes disposal of removed material in the pay item. Disposal of removed material must comply with section 204 or as directed by the Engineer.

D. **Mast Arm Pole. Mast Arm Pole, Cat __** and **Mast Arm, __ foot, Cat __** includes disposal of removed material in the pay item. Ensure disposal of removed material complies with section 204 or as directed by the Engineer.

Mast Arm Pole Fdn, 6 Bolt includes disposal of removed material in the pay item. Disposal of removed material must comply with section 204 or as directed by the Engineer. Steel casing is not included in this pay item and will be paid for separately.

Mast Arm, Remove. Remove the mast arm, fittings, and associated materials as required for a complete removal. Dispose of the removed material as directed by the Engineer. Complete this work in accordance with sections 818, 820, and 204.

Mast Arm, Remove The completed work, as described, will be measured and paid for at the contract unit price.

Mast Arm Standard, Remove. Remove the mast arm standard (pole), fittings, wiring, conduit(s), grounding, ground rod(s), and other material as required for a complete removal. Dispose of the

removed material, as directed by the Engineer. Complete this work in accordance with sections 818, 820, and 204 of the Standard Specifications for Construction.

Mast Arm Std, Rem The completed work, as described, will be measured and paid for at the contract unit price. Removal of the mast arm standard (pole) foundation will be paid for separately using appropriate pay items.

The unit price for **Fdn, Rem** includes the cost of removing the foundation in its entirety and backfilling the hole with granular materials.

E. **Pedestals.** The unit price for **Pedestal, Alum** includes the cost of installing pedestals, including salvaged pedestals, fittings, ground rods, and ground wire.

The unit price for **Pedestal, Fdn** includes the cost of excavating and constructing new concrete foundations and installing grounding and ground rods.

The unit price for **Pedestal, Rem** includes the cost of removing pedestals and associated hardware.

The unit price for **Pedestal Salv** includes the cost of installing salvaged pedestals, hardware, fittings, connectors, wiring, service cables, grounding, ground rods, and conduits.

The unit price for **Pedestal Fdn, Rem** includes the cost of removing the pedestal foundation, hardware, conduit, and other material required to complete the work. Backfilling the hole with granular material is included in the pay item.

The unit price for **Pushbutton Pedestal, Alum** includes the cost of installing the aluminum pushbutton pedestal assembly, installing hardware, fittings, grounding, and ground rod.

The unit price for **Pushbutton Pedestal, Rem** includes the cost of removing the pedestal assembly and hardware.

F. **Case Signs, Illuminated or Non-Illuminated, Changeable Message.** The unit prices for installing, salvaging as required, and removing the relevant case sign pay items for internally illuminated or changeable message signs include the cost of the signs, LED panels, brackets, hardware, cable, and other material required to complete the work. The relevant case sign pay items for non-illuminated signs include the cost of the signs, retroreflective panels, and other materials required to complete the work.

1. **Case Sign Panel.** The unit price for **Case Sign, Panel** includes the cost of installing the case sign panel, or retroreflective case panels.

2. **Case Sign Removal.** The unit price for **Case Sign, Rem** includes the cost of removing illuminated, changeable message, and non-illuminated case signs.

3. **Case Sign Panel Removal.** The unit price for **Case Sign Panel, Rem** includes the cost of removing case sign panels.

G. **Span Wire.** The unit price for **Span Wire** includes the cost of installing new span wire, insulators, guys, and anchors. The messenger wire is incidental to the traffic signal installation, and includes the quarter inch messenger wire, insulators, guys, and anchors.

The Department considers the cost of changing out span wires, as requested by the Contractor, an accommodation to the Contractor at no additional cost to the Department.

The unit price for **Span Wire, Rem** includes the cost of removing span wire, guys, and associated hardware, and disposing of these items off the project.

H. **Anchor Guy, Strut Guy, and Pole Guy.** The Engineer will measure the required sizes of **Anchor Guy, Strut Guy**, and **Pole Guy** as a unit. The unit prices for **Anchor Guy, Strut Guy**, and **Pole Guy** include the cost of installing the guy wire, anchor rod, anchor, strut, and hardware.

I. **Traffic Loop.** The unit prices for **Traf Loop** and **Traf Loop (type)** include the cost of the following:

1. Sawing the slots in the pavement;
2. Making expansion joints;
3. Installing wires in the saw slots and to the handholes;
4. Placing caulking in ends of conduit;
5. Placing sealant in sawcuts, and placing the shielded cable in conduit from its connection to the loop wire in the handhole to the traffic signal controller or digital loop detector cabinet;
6. Connecting the cabinet to the loop detector; and
7. A ¾ inch minimum flexible conduit (non-metallic and rated for underground use) from the pavement to the handhole.

J. **Digital Loop Detector.** The unit prices for **Digital Loop Detector** and **Digital Loop Detector, Salv** include the cost of installing the following:

1. Cable, wire, and detector connections in existing cabinets;
2. Digital loop detectors, including salvaged loop detectors; and
3. Cables to loop terminals in handholes.

The unit price for **Loop Detector, Rem**, if a stand-alone item, includes the cost of removing the loop detector.

K. **Riser.** The Engineer will measure the required type of **Riser,** the conduit going from the earth to the weather head as a unit. The unit price for **Riser** includes the cost of installing PVC Schedule

80 or galvanized rigid metal pipe riser, weather head, expansion joint, fittings, wire arrangements on poles, and associated hardware.

The unit price for **Riser, Rem** includes the cost of removing risers, weather heads, hardware, and fittings.

L. **Conduit Repair under Pavement.** The Engineer will measure **Conduit Repr, Under Pavt** based on plan quantities in accordance with subsection 109.01.A. The unit price for **Conduit Repr, Under Pavt** includes the cost of the following:

1. Locating the conduit break;
2. Repairing and sleeving new conduit sections; and
3. Repairing the concrete encasement.

The Engineer will measure, and the Department will pay for, pavement removal and replacement in accordance with the standard specifications and pay items for that work.

M. **Conduit Repair under Sidewalk or Earth.** The Engineer will measure **Conduit Repr, Under Sidewalk or Earth** based on plan quantities in accordance with subsection 109.01.A. The unit price for **Conduit Repr, Under Sidewalk or Earth** includes the cost of the following:

1. Locating the conduit break; and
2. Repairing and sleeving new conduit sections.

The Engineer will measure, and the Department will pay for, sidewalk removal and replacement in accordance with standard specifications and pay items for that work.

N. **Controllers and Cabinets.** The unit prices for removing controllers and cabinets, and installing salvaged controllers and cabinets include the cost of removing brackets, hardware, fittings, connectors, cables within the cabinet, grounding, conduits attached to the cabinet, and other material.

The unit prices for **Controller and Cabinet, Rem** and **Cabinet, Rem** include the cost of removing the digital loop detector as required, wiring, ground rods, and disposing of removed material.

The unit prices for **Controller and Cabinet, Salv** and **Cabinet, Salv** include the cost of installing ground rods and reconnecting wiring.

The unit price for **Controller Fdn, Base Mtd** includes the cost of placing and compacting backfill, and installing conduit bends and ground rods.

The unit price for **Controller Fdn, Rem** includes the cost removing traffic signal controller foundations, controller pads, wiring, and ground rods.

O. **Warning Signs.** The unit prices for installing and removing the relevant **Warning Sign** or **Sign Optical (LED)** pay items include the cost of disposing of materials and providing and installing warning signs, supports, opticals, hardware, cable conduit and other material required to complete the work.

The unit price for **Warning Sign, Rem** includes the cost of removing warning signs, sign supports, and sign opticals with assembly.

The unit price for **Sign Optical (LED)** includes the cost of installing LED traffic signals, and sign opticals with assembly.

The unit price for **Sign Optical, Rem** includes the cost of removing sign opticals with assembly.

P. **Bracket Truss.** The unit price for **Bracket, Truss, with __ foot Arm** includes the cost of installing brackets, hardware, fittings, connectors, ground rods, ground wire, and grounding.

The unit price for **Bracket, Truss, Rem** includes the cost of removing brackets, hardware, fittings, connectors, ground rods, ground wire, and grounding.

Q. **TS Antenna.** The unit prices for installing, salvaging as required, and removing the relevant **TS, Antenna** pay items include the cost of the antenna (salvaged as required), surge protection, brackets, hardware, cable, conduit on pole, and other material required to complete the work.

The unit price for **TS, Antenna, Rem** includes the cost of removing antenna, wiring, cable from controller, grounding, and ground rods.

The unit price for **TS, Antenna, Salv** includes the cost of installing salvaged antennae.

R. **Emergency Pre-emption.** The unit prices for removing and installing the salvaged emergency pre-emption pay items include the cost of the traffic signal pre-emption equipment, associated with intersection traffic signal control devices, pre-emption units and confirmation lights facing one or more directions, brackets, hardware, cable, conduit on pole, and other material required to complete the work.

The unit price for **Emergency Pre-emption, Rem** includes the cost of removing the traffic signal pre-emption equipment for emergency vehicles, as associated with intersection traffic signal control devices, pre-emption units facing one or more directions, and confirmation lights facing one or more directions.

The unit price for **Emergency Pre-emption, Salv** includes the cost of installing the salvaged traffic signal pre-emption equipment, as associated with intersection traffic signal control devices, pre-emption units facing one or more directions, and confirmation lights facing one or more directions

S. **Concrete Pole Removal.** The unit price for **Conc Pole, Rem** includes the cost of removing concrete poles, hardware, fittings, connectors, wiring, grounding, ground rods, and conduits.

Section 821. PRESERVATION OF BOUNDARY MONUMENTS

821.01. Description. This work consists of preserving the corners shown on the plans, identified in the contract, discovered within the project limits, or as directed by the Engineer or Region Surveyor. These corners are defined in subsection 821.01.A. The Department considers the terms monument, point and corner synonymous when used in this section.

A. **Definitions.**

Public Land Survey System Corners. Section Corners, Quarter Corners, Center of Sections, Protracted Government Corners, Private Claim Corners, Government Lot Corners, and Meander Corners.

Other Corners. Corners that control boundaries for parcels of land and include: Property Corners, Exterior and Interior Plat Monuments, and MDOT Right-of-Way Corners.

Alignment Control Points. Points of Curvature (PCs), Points of Tangent Intersections (PIs), Points on Tangents (POTs), Points on Tangents in Curve Areas (POCTs), and Points on Curve Centerline (POCs).

Preserve. Corners defined in this document which are identified as being within the limits of a construction project and the existing object is expected to be destroyed by construction. These corners are intended to be preserved by reestablishing the object in its original position at the end of the construction project.

Protect. Corners defined in this document which are identified as being within the limits of, or near a construction project and the existing object is not expected to be destroyed by construction. These corners are intended to be protected by marking and identifying the object as not to be disturbed. Locations and measurements are obtained prior to construction to provide the necessary information to reestablish the object in the event the construction project destroys the corner.

B. **Administrative Requirements.** In addition to the requirements included in the Occupational Code, MCL 339.101 *et seq*., work must be performed by employees of the professional surveying firm under the direct supervision of a professional surveyor, licensed in the State of Michigan, to verify point positions, evaluate witnesses, place points, and prepare report(s).

During construction activities, coordinate with the Region Surveyor (in the event there is no Region Surveyor, substitute Supervising Land Surveyor) the following:

1. **Verification of preliminary point positions:** The licensed professional surveyor must field verify the list provided by MDOT of the corners within and near the construction limits that need to be Preserved or Protected.

a. Any additions or subtractions of corners to the provided list must be submitted to the Region Surveyor prior to the start of construction activities for approval.

b. Review the physical locations of corners and compare to the construction plans. Any corners located in existing and/or proposed bridge decks, bridge structures or other locations that are difficult to access or to place a monument shall be identified as early as possible. Contact the Engineer for further direction and a plan of action documented.

c. Notify the Region Surveyor of the completion of the required preliminary verification and witnessing work before construction activities begin on the project.

d. The Region Surveyor will review, with the licensed professional surveyor, the positions of corners within and near the construction limits identified on the plans as Protect.

e. If a corner or point that is marked as Protect and is in danger of being disturbed, identify and witness the corner before construction, using the same method as corners identified as Preserve.

2. **Witnessing All Points Marked as Preserved or Protected:**

a. PLSS Corners and Alignment Control Points identified as Preserve and Protect must be witnessed with four (4) straight-line witnesses (non-straight-line witnesses may be used if agreed to in writing by the Region Surveyor prior to the work commencing) and the coordinate of the corner in the current Michigan Coordinate System (MCS) before construction activities begin on the project.

b. All Other Corners identified as Preserve and Protect can be witnessed using the coordinate of the corner in the current MCS before construction activities begin on the project.

3. **Installing Monuments and/or Verifying Monuments After Construction:**

a. Reestablish all corners and points marked as Preserve in accordance with this section.

b. PLSS and Alignment Control Points marked as Preserve must also be reestablished in accordance with the Corner Recordation Act, MCL 54.201 *et seq*.

c. Corners identified as Protect, but witnessed and left undisturbed, are not required to be reestablished. Maintain documentation of witnesses for payment purposes.

4. **Final Reporting Requirements:**

a. For all corners that have been witnessed, create a table identifying the MCS coordinates of the point, identify the monument that was found prior to construction and identify the monument set after construction.

b. For all PLSS Corners and Alignment Control Points, complete the requirements of this section in accordance with the Corner Recordation Act, MCL 54.201 *et seq*., for each corner and point identified as Preserve. The licensed professional surveyor must submit, to the Region Surveyor, a draft PDF of the Land Corner Recordation Certificate (as prescribed in the Land Corner Recordation General Rules R 54.251-253) for each PLSS corner and Alignment Control Point prior to recording for review.

c. The licensed professional surveyor must record the Land Corner Recordation Certificate(s) in the Register of Deeds Office in the County where the corner is located.

d. Submit a PDF for each Land Corner Recordation Certificate(s) with the Register of Deeds recording stamp and the Liber and Page or File Number where the certificate is recorded to the Department.

e. Provide a signed, sealed and dated PDF to the Department of all corners identified as follows:

   i. Preserve - indicating the corners preserved with replacement monumentation. Note: only PLSS corners and Alignment Control Points require new Land Corner Recordation Certificates.
   ii. Protect - indicating the corners protected and witnessed by the licensed professional surveyor. Include a statement signed, sealed, and dated by the licensed professional surveyor indicating that the corners were found undisturbed after construction.
   iii. Table of Other Corners found and reset after construction. Include a description of the methods used to replace the corners.

Complete the work for all corners Preserved or Protected and submit the documentation within four weeks after the completion of surveying work.

821.02. Materials. Provide and install a monument to mark the location of all reestablished monuments. Unless noted otherwise in the plans, all monuments must conform to MCL 54.201 *et seq*., standards for size and magnetic reading and must be legibly capped showing the license number of the licensed professional surveyor.

Provide and install monument box castings at survey points shown on the plans, or as directed by the Region Surveyor.

821.03. Construction. Reestablish the horizontal position of monuments within 0.02 foot of the original position.

Install points in paved surfaces in monument boxes. Install points located outside of paved surfaces and within gravel roadways, including gravel shoulders, at least 6 inches below the gravel surface. Install points, located outside of paved surfaces, and outside of unpaved roadways, flush with the ground. Drill and grout points located on rock outcroppings into solid rock to at least 8 inches deep. If a point falls in a bridge deck or other inaccessible location, contact the Engineer for further direction on installation.

Install monument boxes in accordance with Standard Plan R-11 series. Reinstall old monument boxes if the monument boxes meet the requirements of Standard Plan R-11 series.

After completion of paving operations, use coring to place new monument boxes in pavement areas. Use a core diameter no greater than 1 inch larger than the largest diameter of the monument box. Grout the monument box in place using non-shrink grout to the full depth, or other material as approved by the Engineer. Do not place the grout in the monument box. Do not place granular material more than 0.1 foot above bottom of the monument box frame. Install monument boxes so both the box and the cover do not extend above the pavement surface and so no part is more than 0.02 foot below the pavement surface. Compact the material at the base of the box before placing the box.

Prevent the reset monument (or cap) from touching the side of the monument box. Position the center of the monument within 0.25 foot of the center of the monument box. Position the top of the monument from 0.2 foot to 0.5 foot below the top of the monument box.

Before construction, measure the distance from the PLSS Corner position or Alignment Control Point to existing record witnesses to within 0.01 foot to verify and establish the Preserve corner position. Document the record the field measured distances to the existing witnesses and provide to the Region Surveyor. There must be a total of four (4) witnesses prior to construction; this may require setting new witnesses.

To preserve existing PLSS corners or Alignment Control Points, place four (4) temporary straight-line witnesses (non-straight-line witnesses may be used if agreed to in writing by the Region Surveyor prior to the work commencing) before construction begins. Place at least four temporary witness points, two on each side of the roadway, outside potential construction activity limits. Submit a copy of the field notes or partially completed LCRC for these measurements to the Region Surveyor. Document this information in Section B of the final Land Corner Recordation Certificate.

To preserve Other Corners, visit the corner(s) prior to construction to verify and obtain the MCS. Document this information and submit to the Region Surveyor.

Reestablish the original position of the PLSS corner or Alignment Control Point using the temporary straight-line witnesses (or non-straight-line witnesses if agreed to in writing by the Region Surveyor prior to the work commencing), ensuring the distances match the original measurements. After reestablishment, remeasure and compare the straight-line witnesses (or

other approved witnesses) with the original measurements and document the measurements in Section B of the final Land Corner Recordation Certificate. If there are deviations from the original measurements, document the new measurement and the method for resolving the deviation(s) in Section B of the final Land Corner Recordation Certificate.

Reestablish Other Corners using the MCS obtained during verification.

Preservation of PLSS corners or Alignment Control Points includes documenting at least four newly established or recovered record witness points expected to remain for five years after construction as described above in subsection 821.01.B.4. All witness objects must be visible from the actual corner or point.

For Alignment Control Points, list the point under Property Controlling Corner or Property Corner and list the control section, job number, route name, point designation, and stationing in Part Aon the Land Corner Recordation Certificate.

821.04. Measurement and Payment.

Pay Item	**Pay Unit**
Monument Preservation	Each
Monument Box	Each
Protect Corners	Each
Monument Box Adj	Each

A. **Monument Preservation.** The Engineer will measure **Monument Preservation** by the number of Public Land Survey System Corners, Other Corners and Alignment Control Points. Approval by the Region Surveyor is required for payment of the above listed pay item(s). The unit price for **Monument Preservation** includes the cost of the following:

1. Preliminary position verification;
2. Temporary witnessing;
3. Providing and installing new monument and permanent witnessing;
4. Recording the Land Corner Record Certificate in accordance with the Corner Recordation Act, MCL 54.201 *et seq*.;
5. Providing the required documents;
6. Preparation and administrative work;
7. Traffic maintenance;
8. Cleanup; and
9. Site restoration.

B. **Monument Box.** The unit price for **Monument Box** includes the cost of removing the existing monument box, and providing and installing the new monument box casting and monument box cover.

C. Any corners or points that are marked as **Protect** but are changed to **Preserve** will be paid for as **Monument Preservation**.

D. **Protect Corners.** The unit price for **Protect Corners** includes the cost of verifying point positions before and after construction, witnessing before construction, and documentation.

E. **Monument Box Adjust.** The unit price for **Monument Box Adj** includes the cost of providing and installing monument box adjusting rings and raising or lowering existing monument boxes to a position flush with the final paved grade. The cost includes verifying the preliminary position, temporary witnessing, permanent witnessing, recording the Land Corner Record Certificate in accordance with the Corner Recordation Act, MCL 54.201 *et seq*., and providing the required documents.

Section 822. SHOULDER AND CENTERLINE PAVEMENT CORRUGATIONS

822.01. Description. This work consists of providing all labor, material, and equipment required to mill corrugations at the shoulder or centerline locations shown on the plans.

822.02. Materials. None specified.

822.03. Construction.

A. **Equipment.** Use equipment that will continuously mill the required pattern and is able to provide a smoothness profile of up to ⅛ inch within the cut depression between peaks and valleys.

The cutting head(s) must be independently suspended from the power unit to allow the cutting tool to self-align with the pavement slope. Equip the cutting tool with guides to provide consistent alignment of each cut in relation to the centerline or edge line.

Demonstrate to the Engineer the ability to achieve the desired surface inside each depression without tearing or snagging the asphalt surface or spalling the concrete surface. Begin production work after the Engineer approves the demonstrated process.

B. **Construction.**

Allow 72 hours after placement of HMA before milling corrugations in HMA.

Allow PCC pavements to reach opening to traffic strength prior to milling corrugations.

Construct corrugations in accordance with the Standard Plan R-112 series.

Dispose of waste material as specified in section 205.

If final pavement markings are waterborne paint, ensure a first application of waterborne paint is applied at the location of the final markings prior to the installation of the corrugations. After the corrugations have been installed, apply a second application of waterborne paint.

If final centerline pavement markings are spray thermoplastic, ensure an application of Temporary Pavement Marking, Type NR (Paint) is applied at the location of the final markings prior to the installation of the corrugations. After the corrugations have been installed, apply the spray thermoplastic pavement markings.

If the final pavement markings are specified as a long life durable marking, paint a temporary waterborne paint layout line (with no beads) exactly where the permanent pavement markings will be placed. Apply the long life durable marking after the corrugations have been installed.

The centerline paint can be used as a straightness guide for the corrugation milling machine to follow, but are not to be used for exact placement. Centerline corrugations are to be centered along the centerline as shown in Standard Plan R-112 Series. Pavement markings are to be offset from the construction joint as shown in pavement marking MDOT Standard Plan PAVE-905 Series.

Remove all grinding spoils or waste and debris from the roadway surface immediately. Prevent the grinding residue from being blown or tracked by traffic, or blown by wind. Do not allow residue to flow across lanes open to traffic or into gutters or drainage structures.

Clean the shoulder and pavement at the end of each day using an Engineer-approved method.

822.04. Measurement and Payment.

Pay Item	**Pay Unit**
Freeway Shld Corrugations, Milled, HMA	Foot
Freeway Shld Corrugations, Milled, Conc	Foot
Non-Freeway Shld Corrugations, Milled, HMA	Foot
Non-Freeway Shld Corrugations, Milled, Conc	Foot
Centerline Corrugations, Milled, HMA	Foot
Centerline Corrugations, Milled, Conc	Foot

A. **Freeway Shld Corrugations, Milled, HMA; Freeway Shld Corrugations, Milled, Conc; Non-Freeway Shld Corrugations, Milled, HMA**; **Non-Freeway Shld Corrugations, Milled, Conc; Centerline Corrugations, Milled, HMA;** and **Centerline Corrugations, Milled, Conc** includes all labor, material and equipment necessary to complete the work as described, including containment, collection and disposal of spoils. The completed work will be measured by the foot along the outside edge of pavement from the center of the first corrugation placed to the center of the last corrugation placed, excluding sections gapped for intersections, bridges, rail crossings or other locations, as shown on the plans and as directed by the Engineer. No additional payment will be made for beadless waterborne layout lines. All other pavement marking payments will be paid for under the appropriate pavement marking pay items.

Section 823. WATER MAINS

823.01. Description. This work consists of excavating, installing, testing, disinfecting, and backfilling ductile iron water mains and appurtenances, and providing as built plans of the completed work. Other water main materials may be required by the Contract.

823.02. Materials. Provide materials in accordance with the following:

Pipe 923
Water Services 923
Gate Wells 909
Gate Valves 923
Tapping Valves 923
Valve Boxes and Curb Boxes 923
Corporation Stops and Curb Stops 923
Service Saddles 923
Fire Hydrants 923
Backfill Material 902
Polyethylene Encasement 923
Castings 908

823.03. Construction. Install pipe materials required by the contract in accordance with AWWA Standards.

A. **General.** The plans show the locations of existing utilities in accordance with available data. If the work requires precise information on the location of existing utilities, the Contractor will expose utilities shown on the plans to determine the actual locations.

Do not disturb or cut into existing in-service water mains. If the operation of valves in existing water mains is required, notify the Engineer in advance so the Engineer may give the Municipality 3 working days advance notice. Coordinate scheduling of water main connections with the Municipality. Secure the Engineer's approval of the schedule before beginning the work. The Municipality is responsible for customer notifications.

The Municipality will open or close valves, as required to perform the work, without charge to the Contractor. In case of an emergency, the Contractor, with the approval of the Engineer, may operate valves to resolve the emergency.

Minimize the out of service time for existing water mains. Make connections at night, on Sundays, or on holidays, as conditions require or as approved by the Engineer. Minimize interference with the water supply if abandoning existing water mains and incorporating new water mains into the water system.

B. **Trench Excavation.** Excavate water main trenches to the lines and grades shown on the plans in accordance with modifications approved by the Engineer, or to meet or bypass existing utility structures. Excavate trenches to the depths shown on the plans to provide at least 5½ feet of cover from top of water main to the final grade. Excavate trenches to the widths shown on Standard Plan R-83 series.

Excavate the bottom of the trench to the required grade to allow 6 inches of bedding for the pipe. Do not block under the pipe.

Maintain trenches for water mains free of ground or surface water by pumping or as otherwise approved by the Engineer.

Install, and later remove, temporary timber bracing, as required to prevent movement or damage to new or existing water mains or adjacent utilities.

During backfilling, carefully remove supports for sheeted and braced excavations to prevent earth banks or adjacent streets from collapsing.

The Contractor may leave sheeting and bracing in place during backfilling and remove after completing backfilling operations. The Contractor may leave sheeting and bracing in place, if approved by the Engineer and the Contractor cuts it off 5 feet below the ground surface.

C. **Disposal.** Dispose of waste material as specified in section 205.

D. **Laying the Pipe.** Install the pipe joint restraint system in accordance with the manufacturer's recommendations. Assemble the pipe in the trench. If deflections at joints are required by changes in grade, alignment, or to plumb valve stems, ensure deflections of bell and spigot joints do not exceed the manufacturer's recommendations. Ensure the deflection at the joints of mechanical joint fittings does not exceed three-quarters of the maximum deflection recommended by the joint manufacturer or that allowed by AWWA C600, whichever is less. Do not store or leave tools or other objects in the pipe.

Provide joint restraint at fittings and deflections of 11¼ degrees and larger. Provide joint restraint in accordance with the Joint Restraint Schedule shown on the plans.

The Engineer may require thrust blocks in accordance with the Municipality's standards, or if making connections to existing water mains.

Construct thrust blocks to bear on undisturbed earth. Perform the work, including cold weather protection, in accordance with section 706.

Relocate a portion of water main to avoid a conflict with another utility where proposed water main is not otherwise being installed in accordance with the water main conflict detail as shown on the plans. Disinfect and test as required.

Install water main in casing pipe where called for on the plans using casing chocks or wooden skids for positioning of the carrier pipe. Use flowable fill with wooden skids as detailed on the plans.

After placement of the carrier pipe, grout both ends of the casing with a mixture of portland cement and sand in any proportion which does not have more than 50 percent sand by volume. Ensure the grout does not extend lengthwise into the casing more than 1 foot.

E. **Abandoning Water Mains.** Remove and dispose of abandoned pipe, gate boxes, or other appurtenances, as necessary for placement of a new water main at no additional cost to the Department. Remove portions of gate boxes to at least 3 feet below the pavement surface under the road, and to at least 12 inches below the planned grade outside the road. If the Engineer determines abandoned mains may remain in place, block the ends of the abandoned mains with concrete. If shown on the plans or as directed by the Engineer, fill abandoned water mains with non-structural flowable fill.

F. **Valves.** Set and join valves to the water mains as required for cleaning, laying, and jointing the required type of pipe, as shown on the plans. Install valves as required by the contract, or as approved by the Engineer. Place the valve stems plumb. Install self-supporting valves that do not bear on the pipe.

G. **Live Taps.** Hand-chlorinate tapping sleeves and gate valves before installation. Perform a wet tap into live water mains according to the manufacturer's recommended procedures.

H. **Live Stop.** Install and operate a water main line stop to isolate a section of existing live water main. Complete all work in accordance with the standard specifications as applicable. Determine the material, size, ovality and condition of the existing water main prior to ordering the line stop materials.

Verify the pressure in the main is below 100 psig prior to installation of the line stop.

Do not attempt to force, reshape, or bend saddle plates by excessive tightening of saddle studs.

Utilize concrete supports and reaction blocking for the line stop fitting per the Municipality's requirements as approved by the Engineer.

Complete a pressure test after assembly of the line stop saddle, drain nozzle and fitting.

Remove the line stop and install a completion plug, and blind flange. Check for water tightness prior to abandonment of the line stop fitting. Coat the whole assembly with coal tar epoxy to a final minimum cured thickness of 0.020 inches.

I. **Valve Boxes.** Provide valve boxes that do not transmit shock or stress to the valve. Place valve boxes plumb over the operating nut of the valve, with the box cover flush with the pavement, or as approved by the Engineer. Provide firm support for valve boxes.

J. **Adjusting and Reconstructing Water Shutoffs or Gate Boxes.** Adjust and reconstruct water shutoffs or gate boxes to the final grade or as approved by the Engineer. Replace shutoff or gate box materials damaged during adjustment or reconstruction, as determined by the Engineer.

K. **Water Services.** Construct water services from the distribution main to the right-of-way line, or as approved by the Engineer.

Construct the service pipe with at least 5 feet of cover.

Make all service connections, and transfers. Maintain and protect, at no additional cost to the Department, existing service connections requiring transfer, but not shown on the plans, until reconnection or disposal.

If relocating a portion of water service, shut down the water service by freezing, or other method approved by the Engineer.

L. **Gate Wells.** Build gate wells as shown in the contract and in accordance with section 403. Mix mortar for masonry work in quantities that will be used before initial set. Do not use mortar that requires retempering.

Position the valve nut to allow access through the opening in the manhole. Construct wells to allow minor valve repairs. Protect the valve and pipe from impact where passing through the well walls.

M. **Water Mains, Cut and Plug.** If the plans show cutting and plugging water mains, arrange for the Municipality to shut down the main. Remove the section of pipe and plug the water main as shown on the plans or approved by the Engineer. Construct the required thrust block and complete backfilling operations. This pay item does not apply to bulkheading abandoned pipe.

N. **Fire Hydrants.** Set fire hydrants at the locations shown on the plans, or as coordinated with the Municipality and directed by the Engineer. Equip the hydrant with auxiliary valves, as shown on the plans. Stand hydrants plumb, with nozzles parallel, or normal to the curb, and with the pumper nozzle normal to the curb. Place the nozzles at the height specified by the manufacturer, and at least 16 inches above the curb grade, or as approved by the Engineer.

Paint hydrants in accordance with the Municipality's standard requirements.

O. **Fire Hydrant Removal.** If the plans show removal of a fire hydrant, remove the entire hydrant assembly, including the following:

1. Auxiliary gate valve and box, unless otherwise approved by the Engineer;
2. Internal valve assembly;
3. Top bonnet;
4. Standpipe; and
5. Hydrant inlet body, if not encased in concrete.

If the Engineer approves leaving the auxiliary gate valve and box in place, remove to at least 3 feet below the pavement surface under the road, or at least 12 inches below planned grade outside the road.

Stockpile the removed material at a location approved by the Engineer. The Municipality will maintain ownership of the hydrant, and will remove the assembly from the project site.

P. **Relocating Fire Hydrants.** If the plans show relocating a hydrant, arrange for the Municipality to shut down the existing main. Remove the hydrant and reinstall at the required location. Add extension sections as necessary to adjust the hydrant to the required elevation. Reconnect the hydrant to the water main by shutting down the main, tapping a new hydrant outlet, or using the existing outlet. Install DI class 54 piping as required.

Q. **Abandoning Gate Wells.** Abandon existing gate wells in accordance with section 203. Salvage the cover if requested by the Municipality.

R. **Gate Wells, Remove.** Remove existing gate wells in accordance with section 203 and salvage existing gate valve. Stockpile the removed material at a location approved by the Engineer. The Municipality will maintain ownership of the gate valve, and will remove it from the project site.

S. **Miscellaneous Fittings.** Install the following at the locations shown on the plans and in accordance with good construction practices:

1. Elbows,
2. Tees,
3. Corporation stops,
4. Blow offs,
5. Pipe adapters,
6. Pipe couplings,
7. Threaded rods,
8. Casing chocks or skid units
9. Retaining glands, and
10. Other miscellaneous fittings.

T. **Backfill.** Protect trench backfill material against freezing, or thaw frozen material before using. Backfill in accordance with Standard Plan R-83 series.

Place backfill in horizontal layers no greater than 8 inches deep and to a height of 12 inches above the pipe. Place backfill equally on opposite sides of the water main at the same time. Compact, by tamping, each successive layer to at least 95% of the maximum unit weight. Completely fill and compact spaces beneath the pipe. During backfill operations around the pipe, avoid damaging pipe joints and coating, or displacing the pipe from its original position.

U. **Hydrostatic Testing.** Perform hydrostatic testing of water mains in accordance with AWWA C600.

Ensure Municipality personnel witness pressure testing. Give the Municipality personnel at least 3 working days notice before testing.

Provide the personnel, temporary timber bracing, plugs, test pumps, temporary connections to the Municipal water system, and other required apparatus. Provide the water for hydrostatic testing if not available from the Municipality. Water must be from a measurable source in order to determine leakage.

Before applying test pressure, expel air from the pipe. To expel air, make taps at the highest elevation points in the pipe. Plug these openings before the test with tight threaded brass plugs. Pressure test each section of water main in increments of no greater than 1,000 feet. Do not perform testing against a closed valve that is in service.

If leakage above the allowable limit occurs during hydrostatic testing, remove backfill to expose pipe and repair the joints and service taps. Repeat testing after repairs are complete.

Correct visible leaks regardless of the amount of leakage. Replace faulty pipes, fittings, gate valves, or other accessories disclosed by testing. Repeat the test until the pipes, fittings, gate valves, and other accessories meet the requirements.

V. **Disinfection, Flushing and Bacteriological Testing.** Disinfect, flush and bacteriological test new and/or portions of existing water main in accordance with AWWA C651, MDEGLE regulations, and applicable local standards and regulations. The Municipality may require a waiting period after flushing and before bacteriological sampling.

Verify the quality of the water used for flushing and subsequent sampling. Use blow offs, fire hydrants, or other means as shown on the plans or approved by the Engineer to flush water mains. Provide hoses and other equipment and arrange a means of disposing of the water without damaging the work or adjacent property.

Dispose of chlorinated water in accordance with applicable state and local requirements. If necessary, apply a reducing agent to the water to neutralize the chlorine and create a chlorine residual of no greater than 1 ppm.

Collect samples from each branch of pipe in the presence of the Engineer and Municipality personnel. The Municipality will be responsible for the transportation of the samples to a State of Michigan approved laboratory for testing. Two consecutive bacteriologically safe tests at 24-hour intervals for each section of pipe are required. Acceptable tests are negative for bacteria and as otherwise defined by AWWA C651 and MDEGLE regulations.

If a bacteriological test fails, repeat disinfection, flushing, and testing.

W. **As-Built Plans.** Prepare as-built plans as work progresses. Provide two complete sets of as-built plans to the Engineer within 30 days following completion of water main work. Include, in the as-built plans, the following information:

1. Pipe sizes,
2. Pipe locations,
3. Fittings,
4. Valve locations,
5. Hydrant locations,
6. Service tap locations, and
7. The locations of underground obstructions that required relocation of the water main installation.

X. **Polyethylene Encasement.** Install polyethylene encasement on water mains and fittings in accordance with the manufacturer's installation instructions and AWWA C105.

823.04. Measurement and Payment.

Pay Item	**Pay Unit**
Water Main, DI, __ inch, Tr Det __	Foot
Water Main, DI, __ inch (used for water main in a casing)	Foot
Gate Valve, __ inch	Each
Live Tap, __ inch by __ inch	Each
Water Main Line Stop, __ inch	Each
Gate Valve and Box, __ inch	Each
Gate Well, __ inch dia	Each
Water Main, __ inch, Cut and Plug	Each
Fire Hydrant	Each
Hydrant, Rem	Each
Hydrant, Relocate, Case __	Each
Gate Well, Abandon	Each
Gate Well, Rem	Each
Gate Well Cover	Each
Water Serv	Each
Water Serv, Long	Each
Water Serv, Conflict	Each

Water Shutoff, Adj, Temp, Case __ ..... Each
Gate Box, Adj, Temp, Case __ ..... Each
Water Shutoff, Reconst, Case __..... Each
Gate Box, Reconst, Case __..... Each
Water Shutoff, Adj, Case __..... Each
Gate Box, Adj, Case __..... Each
Polyethylene Encasement..... Foot
Water Main Conflict, __ inch. ..... Each

A. **Water Main, DI.** The Engineer will measure **Water Main, DI**, of the sizes and trench details required, along the centerline of the pipe, with no deductions for fittings. The unit price of **Water Main, DI** includes the cost of the following:

1. Excavation and backfill;
2. Dewatering operations (trench and/or pipe);
3. Provide temporary water system to maintain service during construction;
4. Hydrostatic testing;
5. Disinfecting and flushing the water main and bacteriological testing;
6. All material, labor and equipment necessary to remedy unsatisfactory hydrostatic and/or bacteriological tests, including removing and replacing any backfill;
7. Providing and installing fittings and gaskets, constructing skid units or casing chocks, installing the water main into a steel casing pipe and sealing the end of the steel casing, bracing or sheeting, blocking, providing temporary support of adjacent utilities within the limits of proposed water main construction and miscellaneous items for installing pipe and reconnecting to the Municipal Water System;
8. Live taps and stops, used at the Contractor's option to expedite connecting to an existing water main;
9. Preparing and providing as built plans.

The Department may withhold payment until the Engineer accepts the as-built plans.

The cost of dewatering of trenches, pipe, or both associated with alterations to the Municipal Water System, is included in the unit price for relevant items of work.

The cost of excavating, disposing of excess material, and providing, placing, and compacting the backfill, is included in the unit price for related items of work.

The cost of removing or abandoning existing water mains, gate valve boxes, and other appurtenances to provide clearance for the proposed water main or roadway, is included in the unit price for relevant items of work.

The Department will pay separately for Non-Structural Flowable Fill.

B. **Gate Valves, Gate Boxes, Live Taps and Water Shutoffs**

1. The unit prices of **Gate Valve**, and **Gate Valve and Box**, of the types and sizes required, include the cost of providing and installing the valve and valve box, complete and ready for use.

2. The unit price for **Live Tap**, of the size required, includes the cost of providing and installing the valve, tapping sleeve, all necessary restraints, and valve box, complete and ready for use. This work includes the complete live tapping procedure.

3. The Engineer will measure and the Department will pay for **Gate Box, Adj, Case __** and **Water Shutoff, Adj, Case __** of the case required, as follows:

   a. Case 1 refers to structures located in hard surfaced travel areas and unit price includes saw cutting, removing and replacing existing pavement, curb, or curb and gutter, and adjusting the water shutoff or gate box to final grade.

   b. Case 2 refers to structures located outside existing pavement, curb or curb and gutter and unit price includes restoring disturbed vegetated or sidewalk areas.

4. The Engineer will measure and the Department will pay for **Gate Box, Reconst, Case __** and **Water Shutoff, Reconst, Case __** of the case required, as follows:

   a. The unit prices for **Gate Box, Reconst, Case __** and **Water Shutoff, Reconst, Case __** of the case required, include the cost of providing and placing new sleeves, castings, and other materials above the existing valve.

   b. Case 1 refers to structures located in hard surfaced travel areas and in addition to costs shown in subsection 823.04.B.4.a unit prices include saw cutting, removing and replacing existing pavement, curb, or curb and gutter, and adjusting the water shutoff or gate box to final grade.

   c. Case 2 refers to structures located outside existing pavement, curb or curb and gutter and in addition to costs shown in subsection 823.04.B.4.a unit prices include restoring disturbed vegetated or sidewalk areas.

5. **Gate Box, Adj, Temp, Case __**, or **Water Shutoff, Adj, Temp, Case __**, will be measured and paid for if temporarily lowering the water shutoff or gate box. The unit prices for these **Temp, Case __** pay items include the costs described for Case 1 pay items and the cost of temporary lowering work.

The Department will pay for replacing damaged gate boxes or water shutoffs, in accordance with subsection 823.03.J as the relevant gate box or water shutoff adjustment pay item. If the Engineer determines gate boxes or water shutoffs were in poor condition, or damaged despite Contractor

precautions, the Department will pay for the work as the relevant gate box or water shutoff reconstruct pay item.

C. **Gate Well.**

1. The unit price for **Gate Well**, of the diameter required, includes the cost of the concrete footing and up to 10 feet of structure depth. **Gate Well Cover** as detailed on the plans, including embossing required by the Municipality, will be paid for as **Gate Well Cover**.

2. The unit price for **Gate Well, Abandon** includes the cost of abandoning the structure, and salvaging the valves, if requested by the Municipality.

3. The unit price for **Gate Well, Rem** includes the cost of removing the structure and salvaging valves for the Municipality.

D. **Water Service. Water Serv** refers to services no greater than 30 feet long. **Water Serv, Long** refers to services greater than 30 feet long. **Water Serv, Conflict** refers to relocating only a portion of a water service. Services with a diameter larger than 2 inches will be measured and paid for as water mains.

The unit prices for **Water Serv, Water Serv, Long** and **Water Serv, Conflict** include the cost of the following:

1. Earth excavation;

2. Removing pavement;
3. Replacing pavement;
4. Jacking and boring;
5. Providing and installing type K copper tubing, service saddle, corporation stops, service stops, and service boxes;
6. Disinfecting;
7. Providing, placing, and compacting backfill; and
8. Miscellaneous material, equipment, or operations.

The Department will pay for additional service connections, not shown on the plans, but maintained, protected, and reconnected or disposed of by the Contractor as **Water Serv**, or **Water Serv, Long**.

The pay item **Water Serv, Conflict** will apply only to portions of water services requiring relocation due to direct conflict with utilities, other items of work, or as otherwise approved by the Engineer. The Department will pay for all other relocations requiring replacement of corporation or service stops as **Water Serv** or **Water Serv, Long**.

E. **Water Main, Cut and Plug.** The unit price for **Water Main, Cut and Plug** includes the cost of cutting the existing water main, providing and placing the required plug, and thrust blocks.

F. **Fire Hydrant.** The unit price for **Fire Hydrant** includes the cost of providing and installing the hydrant, including the coarse gravel and concrete base, at the locations shown on the plans in a ready-for-use condition.

The Department will pay separately for auxiliary valves, or other items included in the contract as separate pay items.

The unit price for **Hydrant, Rem**, includes the cost of breaking down the auxiliary gate valve, gate box, the hydrant assembly, backfilling, and plugging the opening in the existing main.

The unit price for **Hydrant, Relocate, Case __** of the case required, includes the cost of vertically adjusting the relocated hydrant to final grade and the following:

1. Case 1 includes the cost of removing the hydrant, extending the existing hydrant lead from the gate valve, reinstalling the hydrant in a ready-for-use condition, adjusting the existing gate box and hydrant to final grade, and providing and installing sleeves, fittings, and thrust blocks or joint restraints.

2. Case 2 includes the cost of removing the existing hydrant, gate valve and box, and reinstalling the hydrant and gate valve in a ready-for-use condition, adjusting the existing gate box and hydrant to final grade, and providing and installing the cutting-in-sleeve, pipe coupling, tee, elbow, thrust blocks or joint restraints. If used at the Contractor's option, the cost of Live Taps is included in the unit price for **Hydrant, Relocate, Case 2**.

The Department will pay separately for **Live Taps** and additional pipe greater than 10 feet, where detailed on the plans.

G. **Water Main Conflict. Water Main, Conflict, __ inch** applies to those water mains where it is necessary to relocate a portion of the existing water main due to direct conflict with another utility or as approved by the Engineer. **Water Main, Conflict, __ inch** includes furnishing and installing pipe and miscellaneous fittings as needed. Excavating, backfilling, pavement cuts and repairs, jacking or boring, disinfection, supporting of existing utilities, and any other items or operations necessary to complete the work is not to be paid for separately but is to be included in **Water Main, Conflict, __ inch**. This pay item only applies at isolated locations where proposed water main is not otherwise being installed.

Section 824. CONSTRUCTION SURVEYING AND STAKING

824.01. Description. This work consists of Engineer Staking and/or Contractor staking on the project and developing grades and field notes from data shown on the plans. Provide these grades to the Engineer after calculation and at least 48 hours before beginning related work, or as requested by the Engineer.

All work performed under this section must be performed by the Department or the contractor, provided the contractor has in-house staff to perform contractor staking. If the contractor does not have in-house staff to perform contractor staking, then the contractor must sub-consult with a consultant prequalified in the MDOT category: Surveying: Construction Staking. If the contractor is using their staff to perform contractor staking, the Engineer may request the resume of that person which must include: ability, experience and education. If the Department is not performing the engineer staking, it must be done by a consultant with the MDOT prequalification category: Surveying: Construction Staking.

824.02. Materials. Provide stakes, planed on both sides, of the following minimum dimensions and type:

A. Grade stakes 1 inch by 2 inches by 36 inches, light colored hardwood;
B. Slope stakes 1 inch by 3 inches by 24 inches, light colored hardwood; and
C. Pavement stakes 1 inch by 3 inches by 36 inches, light colored hardwood.

824.03. Construction.

A. **Engineer Staking.** Before construction, the Engineer will verify the original project horizontal and vertical control points listed in the survey information sheet.

For Engineer Staking, the Department will perform the following staking:

1. On road projects to ensure that all construction personnel can locate themselves on the project, the Engineer will set stationing stakes on construction centerline or an offset line every 200 feet on tangent and at points of curvature, tangent deflections, and spiral control.
2. The Engineer will loop and set benchmarks shown on the plans and temporary benchmarks as necessary to establish points every 1,000 feet along the project.
3. On bridge projects, the Engineer will provide a staked layout or a base line so the structure can be staked radially. Before staking the layout, the Engineer will discuss the staking method used with the Contractor. The staked layout will include witnesses, reference points and/or offsets, and two benchmarks. The Engineer will provide a staked layout diagram showing witnesses, angles, and coordinates.
4. If required for the installation of right-of-way fence or to delineate right-of-way, a professional surveyor will set all right-of-way stakes at no greater than 100 foot intervals along the right-of-way line and at all corners marking a change in width or direction.

5. For utility relocation, provide staking for bridge and roadway location and grade for use by the utility companies to relocate facilities within the project right-of-way.

The Engineer may eliminate points of intersection of curves and spirals if they fall outside of the project limits. The Engineer will provide a list of applicable coordinates for control points and benchmarks.

B. **Contractor Staking.** The Contractor must complete all staking and layout in accordance with the following:

1. The Contractor will loop and set any additional vertical control needed for the project.
2. Supply stakes, survey equipment, personnel, and other devices to check, mark, preserve, and maintain points, lines, and grades;
3. Perform the work in such a manner as to allow the proper verification of all related work and pay items by the Engineer;
4. Perform staking in such a manner as to allow the Engineer to exercise its authority in accordance with subsection 104.01.

Two work days before moving benchmarks or control points, the Contractor must notify the Engineer. After completion, the Contractor will provide the Engineer with a list of points, including calculations and descriptions of the new locations.

C. **Control Points.** Verify horizontal control points, including curvature points, tangent deflections, and spiral controls for reestablishment of line and distance to within 0.02 foot. Verify the measured distance between control points checks with a precision of 1 in 20,000 for road work and 1 in 20,000 for bridge work. Maintain project control throughout the duration of the project, each visible from the other.

D. **Benchmarks.** Run a level circuit through the entire project to check plan benchmarks and establish new vertical control. The allowable error of closure must not exceed 0.05 feet times the square root of the distance leveled in miles. During grading, check into benchmarks, within the above-mentioned tolerance. Advise the Engineer of benchmarks that are out-of-tolerance while performing checks. Maintain at least two benchmarks at each structure during construction.

E. **Slope Stakes, Subgrade Stakes, Undercut Stakes, Clearing Stakes.** If Automated Machine Guidance (AMG) is not used, provide slope stakes, subgrade stakes, undercut stakes and clearing stakes at 50 foot intervals or as agreed by the Engineer, and at break points due to subgrade transitions, including superelevation transitions and ramp transitions. The Engineer may request subgrade stakes for subgrade inspection, after topsoil stripping and before beginning subsequent grading operations. The Engineer will mark and determine individual tree removal.

F. **Pavement Stakes.** After placing and rough grading the subbase, provide pavement stakes as follows:

1. Place stakes at 50 foot intervals on tangent sections and on curves with radii of at least 1,150 feet;
2. Place stakes at 25 foot intervals on curves with radii of less than 1,150 feet; and
3. Place yield stakes at 200 foot intervals, including stakes to determine wedging limits for hot mix asphalt pavement.

Use pavement grade stakes for finish grading of the subbase, base course, and pavement. Check stakes for grade, realign, and tack before beginning paving operations. This includes taking cross sections at tie-ins and at other critical areas.

G. **Drainage Stakes.** Provide grade and location stakes for culverts, sanitary sewers, storm sewers, subsurface drains, drainage structures, sanitary structures, and outlets to ensure positive drainage. Secure the Engineer's approval for adjustments in location and grade for drainage items.

Before installing underdrains, submit a plan for underdrain outlets to the Engineer for approval, including the following information:

1. Distance between outlets;
2. Low point of vertical curves; and
3. Comparison between clay grade, the underdrain grade, the outlet grade, and the ditch grade at each outlet location.

H. **Miscellaneous Staking.** Provide staking for the following:

1. Pump stations;
2. Curb and gutter;
3. Sidewalk;
4. Watermains;
5. Retaining walls;
6. Siphons;
7. Sound walls;
8. Barrier walls;
9. Junction chambers;
10. Guardrail;
11. Sign structures;
12. Signs;
13. Traffic Signal Poles;
14. Structure under clearance;
15. Crossovers;
16. Restoration items;

17. Erosion control items; and
18. Other staking required to construct the project.

I. **Muck Stakes.** Provide muck stakes in accordance with the following, or as modified by the Engineer:

1. Place centerline stakes in accordance with subsection 824.03.F.1, and subsection 824.03.F.2;
2. Place offset stakes at no greater than 50 foot intervals to provide information for construction and determining pay quantities;
3. Verify each stake displays stationing, offset distance, and ground elevation; and
4. To determine the depths of replaced muck, establish a grid, to establish the amount of peat excavation. A normal grid consists of one cross section every 50 feet along the centerline between the 1:1 slope intercept with the original ground, as shown on the standard plans for treatment of peat marshes.

J. **Temporary and Permanent Signs.** Place post driven temporary and permanent sign stakes based upon provided traffic typicals or as shown on the plans. This does not include temporary signs needed for maintaining traffic purposes. Notify the Engineer after completing temporary and permanent staking, before installing signs.

K. **Bridge Approaches.** Develop grades and field notes to construct bridge approaches from data shown on the plans. Place stakes in accordance with subsection 824.03.F.

L. **Bridge Substructure.** Upon completion of foundation excavation, the Engineer will verify the foundation line and grade.

Carry the line and grade to the bridge seat elevation, aligning and dimensioning forms, and staking substructure work including footing embankment or excavation, pile layout, footings, abutment wall, and anchor bolts.

Before casting pier caps or abutment walls, the Engineer will verify the line, grade, and span lengths. If adjustments are required, perform the work at no additional cost to the Department.

M. **Bridge Superstructure.** Set the following grades required to complete the structure:

1. Deck and rail grades;
2. Screed;
3. Haunch;
4. Bulkhead;
5. Sidewalk;
6. Curb;
7. Fascia;
8. Barrier grades; and
9. Other grades required.

Verify beam elevations, existing deck elevations, or both, from existing plan information to calculate final deck grades, including those for overlay projects. Provide final deck grades and associated calculations to the Engineer before setting the rail grades.

Obtain the Engineer's approval before adjusting the screed to obtain proper slab depth, steel cover, ride quality, drainage, or cosmetic appearance. Provide the Engineer other bridge superstructure grades requiring adjustment before use and stake at no additional cost to the Department. The Department will pay for Engineer directed changes as extra work.

Provide structure clearance measurements to the Engineer for new construction or improvements of existing roadways or structures where the improvements change the current underclearance measurements.

N. **Bridge Overlays.** On overlay projects, determine finished deck grades referenced to a proposed deck profile, and obtain the Engineer's approval before setting expansion joint devices. Set expansion joint grades along the centerline of the expansion joint device in accordance with the proposed deck cross section.

Base the profile at break points across the bridge deck section and at no greater than 25 foot intervals on elevations taken on the existing concrete deck. If the existing deck includes a bituminous overlay, take the existing elevations after removing the bituminous overlay. Unless otherwise shown on the plans, match the proposed deck cross slopes to existing deck cross slopes.

Correct irregularities in existing profile cross section and slope to achieve ride quality and drainage. In determining bridge deck elevations, consider scarifying depths, hydro-demolishing depths, and the minimum thickness of overlay material to avoid overlay material quantity overruns. Calculate the quantity of overlay material required to construct the deck to the elevations shown on the plans and submit calculations to the Engineer before beginning construction.

O. **Site Adjustments.** Review the plans. Develop grades and notes, after performing checks on the project. If deviations from the plans occur, immediately notify the Engineer. The Engineer will determine the actual solution and provide timely direction.

P. **Final Measurement.** Provide detailed measurements, sketches, and computations, of final measurement for earthwork, undercuts, muck excavation, swamp backfill, sand subbase, and topsoil stripping.

Q. **Construction Survey and Staking Measurements.** Provide construction surveying and staking to the tolerances specified in Table 824-1.

Table 824-1 Construction Survey and Staking Tolerances		
Type	**Horizontal**	**Vertical**
Bench Loops	1,000 ft (maximum); 100 ft (minimum) between benchmarks	0.05 ft * SQRT of distance leveled in miles
ROW Stakes	0.04 ft	—
Clearing Stakes	0.10 ft	—
Slope, Subgrade, Utility Tunnel, and Miscellaneous Stakes	0.10 ft	0.03 ft
Pavement and Drainage Stakes	0.04 ft	0.01 ft
Bridge Stakes	0.01 ft	0.01 ft
Cross Sections	25 ft left and right; 50 ft along centerline (a)	0.10 ft on ground shots; 0.01 ft on others
a. Distances shown are minimum allowable distances between cross section stakes left and right of centerline and along centerline.		

R. **Preserving Stakes.** Preserve completed staking, as required for Engineer inspection of construction work. Maintain the dimensions, grades, and elevations of the work after the Engineer's inspection and approval of the layout.

The Contractor must make a reasonable effort to preserve stakes set by the Engineer and/or Contractor. The contractor is responsible to replace stakes and benchmarks lost or destroyed by Contractor operations, at no additional cost to the Department. If Contractor staking is not used on the project the cost to replace the stakes and benchmarks lost or destroyed will be reimbursed to the department at the same rate as Staking Plan Errors and Extras listed in Section 824.04. The Engineer must verify replacement stakes or benchmarks.

Locate, preserve, and witness government monuments within the project in accordance with section 821.

The Department will not pay for work dependent on lost or destroyed stakes until the Contractor replaces the stakes. The Department will not allow claims for damages caused by the Contractor's replacement of required stakes or benchmarks.

S. **Plan Errors.** Immediately notify the Engineer of a plan error. Document and submit to the Engineer, the efforts and the steps to correct a plan discrepancy. The Engineer will determine the solution and decide if the Contractor or the Department will provide staking for corrective action.

If a plan error results in extra work, the Engineer will issue a work order directing corrective action. Time for staking begins when the crew begins work detailed on the work order, including time for calculations and plotting. Provide written notification to the Engineer when work begins and ends.

T. **Extra Work.** For extra work, the Engineer will provide lines, grades, and calculations, as needed. The Engineer will determine if the Contractor or the Department will perform required staking.

U. **Staking Changes.** The Engineer will resolve and approve staking changes within 2 working days. The Department will not allow claims for damages or extensions of time during the resolution and approval period for staking changes unless the Contractor shows the changes adversely affect the critical operation and fall outside the approved Contractor Quality Control Plan.

Before making Contractor initiated staking changes, including staking changes resulting from plan error, provide documentation for the Engineer's approval. Documentation for staking changes includes notes, calculations, and drawings.

During staking, perform checks to establish locations and grades to fit the existing conditions as agreed by the Engineer. Correct errors from Contractor operations at no additional cost to the Department.

V. **Staking Documentation.** The Department may inspect field notes and calculation documents at any time. Sign, check, date, and provide staking documentation and field notes, as requested by the Engineer. Original field notes and grade calculation documents will become the Department's property upon completion of the work.

Provide original and final plotted cross sections and final volume calculations in a format approved by the Engineer for earthwork, undercuts, muck excavation, swamp backfill, sand subbase, and topsoil stripping. Determine final quantities by plan sheet.

Provide the Engineer a final "as constructed" set of plans in accordance with the current Department procedures, documenting vertical and horizontal alignment changes, drainage and subsurface changes, and other changes. Verify plans represent the same scale shown on the plans.

W. **Contractor Staking Quality Control.** Provide Contractor Staking Quality Control (CSQC) for compliance with contract requirements keyed to construction sequence.

Perform staking in accordance with Department procedures.

At the preconstruction meeting, provide the Engineer with a CSQC plan and describe measures to detect and minimize construction staking errors.

The Engineer will perform periodic reviews of the CSQC plan with the Contractor during the project. The Department considers these assurance reviews. Allow the Engineer access to in-progress construction staking work and phases of the ongoing CSQC plan.

The Engineer will use assurance reviews to make independent checks on the reliability of quality control procedures as shown on the CSQC plan. Assurance reviews do not constitute the Engineer's acceptance of the work. Correct work related to staking errors.

1. **Quality Control Staff.** Identify the plan manager and the primary on site representative (this may be the same as the plan manager). Submit, for the Engineer's approval, the plan manager and on-site representative's resume, including ability, experience, and education.

   a) **Plan Manager.** Provide a plan manager as the sole contact to the Department for staking quality control. The plan manager is responsible for contractor staking quality control on each phase of the project.

   b) **On Site Representative.** Has the authority to communicate directly with the Engineer.

2. **Equipment Calibration.** Provide copies of equipment certification for levels, transits, lasers, and total stations. Check equipment per manufacturer's specifications, or at a minimum, on a semi-annual basis, or if equipment accuracy becomes questionable. When performing field checks, document the method and readings and provide to the Engineer.

3. **Procedures and Records.** Include, in the CSQC plan, a listing of the procedures and records to control the quality of the staking operation. Provide at least the following information:

   a. List of work items for staking;
   b. Description of methods of computing grades and staking;
   c. Description of the checks to detect errors;
   d. Methods of documentation;
   e. Procedure to handle detected errors; and
   f. Final measurement methods and documentation.

4. **Approval of CSQC Plan.** Submit to the Engineer, within 5 working days, the CSQC plan before beginning staking operations. The Department will review the plan to determine acceptability within 5 working days. Do not begin work until the Engineer accepts the plan in writing. The Department will not grant extensions of time without liquidated damages for the Contractor's inability to submit an acceptable plan.

5. **Changing the Plan.** If the Department determines the Contractor's performance is unsatisfactory, the Department reserves the right to require the Contractor to make changes in the CSQC plan at no additional cost to the Department. The Department may suspend work operations until the Engineer receives an updated satisfactory CSQC plan and approves of the plan changes.

824.04. Measurement and Payment.

Pay Item	**Pay Unit**
Contractor Staking	Lump Sum
Staking Plan Errors and Extras	Hour

If the Engineer determines the Contractor will perform staking as extra work, the Department will pay for staking in accordance with section 103.

If the contract does not include the pay items listed in this subsection 824.04, the Department is responsible for construction layout and the work specified in this section.

The Department will make partial payments for staking pay items in accordance with the following Table 824-2:

Table 824-2 Staking Schedule of Partial Payments	
Percent of Original Contract Amount Earned	**Percent of Contract Unit Price Paid**
Approved CSQC Plan	10%
10%	30%
50%	75%
90%	90%

The Department will retain 10 percent of the relevant contractor staking pay item until the Engineer receives the required documents.

The Department will not make adjustments in the lump sum amount for **Contractor Staking** if the final contract amount for the project is within ±5 percent of the original contract amount or for approved extensions of time. If final contract amount differs from the original contract amount by greater than ±5 percent, the Department will make an upward or downward adjustment to the lump sum amount for **Contractor Staking** by the percentage that exceeds ±5 percent.

If the contract includes the pay item **Contractor Staking**, provide the lines, grades, and elevations specified in subsection 824.03 for the prosecution, inspection, and final measurement of the work.

The Department will pay for **Staking Plan Errors and Extras** at the unit price bid or at the following rate, whichever is less

Staking Plan Errors and Extras, $180 per hour (regardless of crew size)

The Department will not pay separately for staking changes approved by the Engineer due to the Contractor's methods.

Section 825 SANITARY SEWER SYSTEMS

825.01. Description. This work consists of constructing Sanitary Sewer Systems, as required by the contract and approved by the Engineer. This work includes trench excavation, dewatering, sheeting and/or bracing, backfilling, testing of the pipe, disposal of waste materials, connections to existing systems, maintaining sanitary service, providing as-built plans and any related work necessary to complete the sewer installation.

825.02. Materials. Provide materials for the sanitary sewer work that meet the requirements of this section, AWWA Specifications, and the requirements of the sanitary sewer owner.

Concrete pipe must conform to sections 402, 909, and as indicated on the plans.

Ductile Iron (DI) pipe must conform to the requirements of AWWA Specification C151 (ANSI A21.51) of the sizes shown on the plans. The pipe must be thickness class 54.

DI pipe must be lined with calcium aluminate mortar, polyethylene, ceramic epoxy or other approved material capable of withstanding the corrosive effects of wastewater. The outside of the pipe must be coated with the standard bituminous seal. The metal thickness class, net weight of the pipe without lining, the nominal size, and the manufacturer's identifying symbol must be clearly marked on each length of pipe.

Polyvinyl Chloride (PVC) pipe for sewer main and service laterals must conform to the requirements of ASTM D3034 and must have a standard dimension ratio (SDR) of 26. Provide homing marks on pipe sections and joint material to show the correct alignment during field installation. Provide joints with an elastomeric gasket push-on type conforming to ASTM D3212, unless specified differently on the plans. PVC fittings must be full fittings conforming to ASTM D3034 for pipe wall thickness of SDR 26.

All pipe must be certified by the manufacturer to meet the applicable ASTM specification requirements. Provide certifications forms, together with a report of the test results, to the inspector with pipe deliveries with copies forwarded to the Engineer. Certification forms must include project name, location, Contractor, and test lot number. Lot sizes must be acceptable to the Engineer.

All pipe and fittings must be marked to provide manufacturer’s name, lot or production number, ASTM designation, nominal diameter, and SDR number, where applicable. Fittings, however, need not contain lot or production number.

The gaskets used with DI pipe must meet all applicable requirements of AWWA C110 (ANSI A21.10) and AWWA C111 (ANSI A21.11) specifications.

Flexible transition couplings must be used when connecting a proposed sanitary sewer to an existing sanitary sewer main or lateral where a manhole is not utilized at or near the point of

connection. These connections must be water-tight by use of a manufactured flexible transition coupling designed for such purpose. Flexible transition couplings must be in accordance with ASTM D5926 and ASTM C1173. Acceptable manufacturers are Fernco, Inc., Cascade Flex-Seal or approved equal.

Couplings, fittings, solvents and lubricants must be as recommended by the pipe or fitting manufacturer and as specified herein.

Provide precast concrete sanitary manholes in accordance with section 403.

825.03. Construction. Perform all work in accordance with sections 203, 206, 402 and 403 and ASTM D2321, as well as federal, state and local requirements.

A. **General**. The plans show the locations of existing utilities in accordance with available data. The Contractor will expose utilities shown on the plans to determine the actual locations. Provide the Engineer with a copy of the results for review. Notify the Engineer in advance of work so the Engineer may give the Municipality 3 working days' notice.

Maintain sanitary sewer service at all times during construction of the sanitary sewer and/or structures, by temporary pumping, construction staging or other means as approved by the Engineer. Provide bypass pumping equipment, labor and materials to perform the work of bypass pumping for the interrupted flow of sewage in the sanitary sewer mains during construction of the proposed sanitary system and coordinate the progress with the Engineer. Equipment used for dewatering and bypass pumping must be of a size and type adequate to perform the job and must be operated in such a manner as to minimize disruption to the public. On operations which require continuous pumping over prolonged periods of time, provide pumps, generators and other equipment that meet local and state noise ordinances. The work may need to be performed on weekends, holidays or off-peak hours to minimize impact. Coordinate scheduling of connections with the Municipality and obtain the Engineer's approval of the schedule.

Connections to the existing sanitary sewer service leads must be made at the ROW line and include a cleanout unless otherwise approved by the Engineer. Make pipe connections as recommended by the pipe manufacturer. The cleanout must be the same size and material type as the sewer lead, and include a wye-branch, a 45 degree sweep, a section of riser pipe and a threaded plug installed at grade level.

B. **Trench Excavation.** Excavate in accordance with subsection 823.03.

C. **Disposal.** Dispose of waste material as specified in section 205.

D. **Laying of Pipe.** Use laser equipment for the installation of all pipe. Lay pipe to the grade shown on the plans. Field verify invert elevations at each manhole and notify the Engineer immediately if deviations from plan elevations are encountered.

E. **Abandoning Existing Sanitary Sewers.** Abandon existing sanitary sewers as specified in subsection 823.03.

F. **Testing.** Subject all sanitary sewer to air, infiltration or exfiltration tests or a combination of same, prior to approval of the sanitary sewer and structure.

1. **Infiltration or Exfiltration Test.** All sanitary sewer, where the groundwater level above the top of the sanitary sewer is more than 7 feet, must be subjected to the infiltration test. All sanitary sewer, where the groundwater level above the top of the sanitary sewer is 7 feet or less, must be subjected to the air test or exfiltration test. If an exfiltration test is performed, the maximum exfiltration rate is the same as that permitted for the infiltration test. For the purpose of exfiltration testing, the internal water level must be equal to the external water level plus 7 feet, as measured from the top of the pipe.

   Where groundwater conditions require dewatering operations in order to construct the sanitary sewer and structures, the Contractor may, at their option, perform a preliminary air test after backfilling and while the dewatering equipment is still operating. After dewatering operations have ceased and groundwater has stabilized at its normal level (7 feet or less above the sanitary sewer) and if the preliminary air test was satisfactory, the preliminary air test may be accepted as final to the satisfaction of the Engineer.

   The maximum allowable infiltration must not exceed 100 gallons per inch of diameter per mile of pipe per 24 hours for any individual run between manholes.

2. **Air Test.** Test the sanitary sewer by applying an air pressure test described herein. Methods of testing and measurement other than specified herein must be approved by the Engineer. Perform all testing in the presence of the Engineer and a representative of the Municipality.

   Furnish all equipment and labor for air testing, including, but not limited to, a portable air compressor, standard air hose, one single and one triple connection pneumatic sanitary sewer plug, one hand air pump, stopwatch and one air gauge, range 0 to 30 pounds per square inch gauge (psig) graduated in tenths from 0 to 10 psig.

   Test the pneumatic plugs, in the presence of the Engineer, prior to actual line testing in the following manner: Remove all debris from the pipe prior to air testing. Lay one length of sanitary sewer pipe on the ground and seal at both ends with pneumatic plugs to be checked; introduce air into the pipe until the pipe pressure reaches 15 psig. The pneumatic plugs being checked must hold against this pressure without the need for bracing, and without movement of the plugs out of the pipe. All pneumatic plugs must pass the test before being used to test the actual installation.

   a. **Air Test Procedures**. Immediately following the pipe cleaning, introduce low pressure air into the sealed line until the internal air pressure reaches 3.5 psig greater than the average

hydrostatic pressure of any groundwater that may be over the pipe. Allow at least 2 minutes for the air pressure to stabilize.

The portion of the line being tested will be accepted if the portion under the test meets or exceeds the requirements of ASTM F1417. The time, in minutes, required for the pressure to decrease from 3.5 to 2.5 psig greater than the average back pressure of any groundwater that may be over the pipe must not be less than the time shown for the given diameters listed in Table 1 of ASTM F1417.

If the pipe diameter to be tested falls between the pipe sizes listed in ASTM F1417, use the next larger pipe size. If the system does not meet specified requirements, locate and repair the leaks at no extra cost to the Department and repeat the tests until the permissible leakage is obtained.

3. **Video Inspection.** Perform video inspection in accordance with subsection 402.03.K for all diameters of sanitary sewer main.

G. **As-Built Plans**. Provide as-built plans of the sanitary sewer and structures, acceptable to the Engineer, to be forwarded to the Municipality. The minimal information required for acceptable as-built plans include; pipe size, slope, pipe and manhole locations (station and offsets), manhole size, invert elevations, tees, tie-ins and individual service connections. Sanitary sewer work is not considered complete, and payment may be withheld, until acceptable as-built plans have been provided to the Engineer.

825.04. Measurement and Payment.

The completed work, as described, will be measured and paid for at the contract unit price using the following pay item:

Pay Item	**Pay Unit**
Sanitary Sewer, DI, __ inch, Tr Det __	Foot
Sanitary Sewer, PVC, __ inch, Tr Det __	Foot
Sanitary Sewer, Conc, __ inch, Tr Det __	Foot
Sanitary Structure, __ inch dia	Each
Sanitary Structure, Add Depth of __ inch dia, 8 foot to 15 foot	Foot
Sanitary Structure, Add Depth of __ inch dia, more than 15 foot	Foot
Sanitary Structure Cover, Type __	Each
Sanitary Structure, Rem	Each
Sanitary Structure, Tap, __ inch	Each
Sanitary Sewer, Serv Lead, PVC, __ inch	Foot
Sanitary Sewer Cleanout, __ inch	Each
Sanitary Sewer Lead, Rem and Abandon	Each
Sanitary Structure Cover, Adj, Case__	Each
Sanitary Structure, Adj, Add Depth	Foot

A. **Sanitary Sewer. Sanitary Sewer, __, __ inch, Tr Det __** of the material, sizes and trench details specified, will be measured in place along the centerline of the pipe. The unit price includes all labor, equipment and materials required to perform the work specified herein and shown on the plans, including excavation and backfill, locating and connecting to existing sanitary sewer mains, pumping/bypass pumping to maintain sanitary service, locating and connecting to existing service leads, dewatering (trench and/or pipe), testing, furnishing and installing all premium joints, bracing or sheeting, blocking and all other miscellaneous items necessary for the installation of the pipe. **Sanitary Sewer, __, __ inch, Tr Det __** includes additional costs due to working weekends, holidays and off-peak hours. Video inspection and integrity testing are included in the contract unit price for **Sanitary Sewer, __, __ inch, Tr Det __**.

Cost of all labor, equipment and materials necessary to conduct specified testing and to remedy any unsatisfactory test, including removing and replacing any backfill or piping, is included in the contract unit price for associated sanitary sewer pay items and will not be paid for separately.

B. **Sanitary Structure. Sanitary Structure, __ inch dia, Sanitary Structure, Add Depth, of __ inch, 8 foot to 15 foot,** and **Sanitary Structure, Add Depth of __ inch, more than 15 foot** to be measured and paid for in accordance with section 403.04, Dr Structure, Add Depth, 8 foot to 15 foot, and Dr Structure, Add Depth, more than 15 foot. Payment includes furnishing all material, labor, and equipment required to perform the work specified herein and shown on the plans including resilient connections with straps, installing sanitary manhole cover and any adjustments to final grade.

C. **Sanitary Structure Cover**. **Sanitary Structure Cover, Type __** includes payment in full for furnishing all material, labor, and equipment required to install the sanitary manhole covers as shown on the plans.

D. **Sanitary Structure Removal. Sanitary Structure, Rem** will be measured and paid for in accordance with section 203.04, Dr Structure, Rem.

E. **Structure Tap**. The unit price for **Sanitary Structure, Tap, __ inch** will be measured per each. Connections and/or taps include the furnishing and installation of the approved equal flexible watertight boot connection system.

F. **Sanitary Sewer Lead. Sanitary Sewer, Serv Lead, PVC, __ inch** will be measured in place per foot along the centerline of the pipe. The price will include payment in full for furnishing all excavation and backfill, all material, labor, and equipment required to perform the work specified herein and shown on the plans, including temporary hook up to maintain sanitary service, locating and connecting to the existing service lead, connection to the existing or proposed sanitary main, dewatering (trench and/or pipe), all testing, furnishing and installing all premium joints, wyes, fittings, bracing or sheeting, blocking and all other miscellaneous items necessary for the installation of the lead.

G. **Sanitary Cleanout**. The unit price for **Sanitary Sewer Cleanout, __inch** will be measured as each and includes dewatering (trench and/or pipe), furnishing and installing all premium joints, wyes, caps, fittings, bracing or sheeting, blocking and all other miscellaneous items necessary for the cleanout installation.

H. **Sewer Lead Remove and Abandon.** The unit price for **Sanitary Sewer Lead, Rem and Abandon** includes locating and verifying the lead is abandoned, capping the existing service lead at the main, dewatering (trench and/or pipe), all testing, furnishing and installing all premium joints, wyes, caps, fittings, bracing or sheeting, blocking and all other miscellaneous items necessary for the removal and abandonment of the lead.

I. **Sanitary Structure Adjustment. Sanitary Structure Cover, Adj, Case__** and **Sanitary Structure, Adj, Add Depth** will be measured and paid for in accordance with section 403.04, Dr Structure Cover, Adj, Case __ and Dr Structure, Adj, Add Depth.

Temporary lowering of sanitary structure covers, if required, will be measured and paid for as Dr Structure, Temp Lowering in accordance with subsection 403.04.E.

Video inspection, mandrel testing and integrity testing are all considered as included in the contract unit price for Sanitary Sewer.

Payment to remedy an unsatisfactory test, including removing and replacing any backfill, will be considered as included in the contract unit price for Sanitary Sewer and Sanitary Structures.

As-built plans are included in the contract unit price for associated sanitary sewer pay items. Payment may be withheld until the as-built plans are acceptable to the Engineer.

DIVISION 9 – MATERIALS

Section	Title	Page No.
901	Cement and Lime	XX
902	Aggregates	XX
903	Admixtures and Curing Materials for Concrete	XX
904	Asphaltic Materials	XX
905	Steel Reinforcement	XX
906	Structural Steel	XX
907	Fencing Materials	XX
908	Miscellaneous Metal Products	XX
909	Drainage Products	XX
910	Geosynthetics	XX
911	Water	XX
912	Timber and Lumber	XX
913	Masonry Units	XX
914	Joint and Waterproofing Materials	XX
915	Bridge Coating Systems	XX
916	Erosion and Sedimentation Control Materials	XX
917	Turf and Landscaping Materials	XX
918	Electrical and Lighting Materials	XX
919	Permanent Traffic Sign and Support Materials	XX
920	Permanent Pavement Marking Materials	XX
921	Permanent Traffic Signal Materials	XX
922	Temporary Traffic Control Materials	XX
923	Water Main Materials	XX

DRAFT – July 2020

NOTES

Section 901. CEMENT AND LIME

901.01. General Requirements. Provide facilities for sampling and inspecting cement at the mill, the distribution point, and the project. Store cement to allow access for inspection and identification of each shipment.

Ensure portland cement does not develop false set if tested by the mortar method specified in ASTM C359. The Department defines false set as occurring if penetration is less than 5 mm at 5-minute, 8-minute, or 11-minute intervals. The Department will apply these limits if difficulties arise from premature stiffening during the concrete placement or finishing.

Before concrete placement, provide the Engineer a copy of the Certification of Quality of Cement, as provided by the producer.

901.02. Testing. Cement and lime materials testing must be in accordance with the specified ASTM, AASHTO, or Department methods, as modified by this section.

901.03. Portland Cement.

A. **Type I, Type II, and Type III Portland Cements.** Type I, Type II, and Type III portland cements must meet the requirements of ASTM C150/C150M. The requirements for time of setting by Gillmore Needle or Vicat Needle, and the 7-day and 28-day compressive strength apply.

B. **Blended Cements.** Blended cements must meet the requirements of ASTM C595/C595M.

901.04. Masonry Cement. Masonry cement must meet the requirements of ASTM C91/C91M, Type N, Type S, or Type M.

901.05. Hydrated Lime. Hydrated lime must meet the requirements of ASTM C207, Type S or Type SA.

901.06. Slag Cement. Slag cement must meet the requirements of ASTM C989/C989M, Grade 100, minimum.

901.07. Fly Ash. Fly ash must meet the requirements of ASTM C618, Class F, or Class C, except the loss on ignition must not exceed 5 percent and the air-entraining admixture uniformity requirement in Table 3 for Supplementary Optional Physical Requirements will apply.

901.08. Silica Fume, Dry-Densified. Dry densified silica fume must meet the requirements of ASTM C1240.

Section 902. AGGREGATES

902.01. General Requirements. The Department may re-inspect and retest aggregates regardless of inspection at the producing plant. Provide safe access to the material for sampling from haul units or stockpiles.

Do not use spent metal casting foundry sand, unless the contract expressly allows for its use.

Do not contaminate aggregate during loading or measurement.

902.02. Testing. Test aggregate materials in accordance with the following:

Material	Test
Wire Cloth and Sieves	AASHTO M92
Materials Finer than 75 mm (No. 200) Sieve in Mineral Aggregates by Washing	AASHTO T11
Specific Gravity and Absorption of Coarse Aggregate	AASHTO T85
Specific Gravity and Absorption of Fine Aggregates	AASHTO T84
Sieve Analysis of Fine and Coarse Aggregate	AASHTO T27
Sampling and Testing Fly Ash	ASTM C311/C311M
Sand Equivalent of Fine Aggregate	ASTM D2419
Flat Particles, Elongated Particles, or Flat and Elongated Particles in Coarse Aggregate	ASTM D4791
Organic Impurities in Fine Aggregate	AASHTO T21
Sieve Analysis of Mineral Filler	AASHTO T37
Mortar Strength	AASHTO T71
Particle Size Analysis	AASHTO T88
Plastic fines in Graded Aggregates and Soils by Use of the Sand Equivalent Test	AASHTO T176
Uncompacted Void Content of Fine Aggregate	AASHTO T304
Water Asphalt Preferential Test	MTM 101
LA Abrasion Resistance of Aggregate	MTM 102
Insoluble Residue in Carbonate Aggregate	MTM 103
Sampling Aggregates	MTM 107
Loss by Washing	MTM 108
Sieve Analysis of Aggregate	MTM 109
Deleterious and Objectionable Particles	MTM 110
Aggregate Wear Index	MTM 111
Aggregate Wear Index	MTM 112
Selection and Preparation of Coarse Aggregate Samples for Freeze-Thaw Testing	MTM 113
Making Concrete Specimens for Freeze-Thaw Testing on Concrete Coarse Aggregate	MTM 114
Freeze-Thaw Testing of Coarse Aggregate	MTM 115

Crushed Particles in Aggregates..... MTM 117
Angularity Index of Fine Aggregate..... MTM 118
Sampling Open-Graded Drainage Course Compacted in Place..... MTM 119
Dry Unit Weight (LM) of Coarse Aggregate ..... MTM 123
Determining Specific Gravity and Absorption of Coarse Aggregates..... MTM 320
Determining Specific Gravity and Absorption of Fine Aggregates ..... MTM 321
Determining Percentage of Flat Particles, Elongated Particles,
or Flat and Elongated Particles in Aggregate..... MTM 130

A. **Terminology.** The Department uses the following terminology in the testing and acceptance of aggregates:

Natural Aggregates. Aggregates originated from stone quarries, gravel, sand or igneous/ metamorphic rock deposits.

Slag Aggregates. Byproducts formed in the production of iron, copper, and steel.

Iron Blast Furnace Slag. A synthetic nonmetallic byproduct simultaneously produced with pig iron in a blast furnace that primarily consists of a fused mixture of oxides of silica, alumina, calcium, and magnesia.

Reverberatory Furnace Slag. A nonmetallic byproduct of refined copper ore.

Steel Furnace Slag. A synthetic byproduct of basic oxygen, electric or open-hearth steel furnaces that primarily consists of a fused mixture of oxides of calcium, silica, iron, alumina, and magnesia.

Crushed Concrete Aggregate. Crushed portland cement concrete.

Salvaged Aggregate. Dense graded aggregate or open-graded aggregate saved or manufactured from Department project sources that may consist of natural aggregate, blast furnace slag, with particle sizes no greater than 2 inches and no visible organic or foreign matter.

Manufactured Fine Aggregate. One hundred percent crushed rock, gravel, iron blast furnace slag, reverberatory furnace slag, or steel furnace slag.

Natural Sand 2NS and 2MS. Fine, clean, hard, durable, uncoated particles of sand free from clay lumps, and soft or flaky granular material resulting from the natural disintegration of rock, and used in concrete mixtures, mortar mixtures, and intrusion grout for pre-placed aggregate concrete.

Relative Density (OD). Relative specific density (specific gravity) of aggregate that is dried or assumed to be dried. The aggregate is considered dried when it has been maintained

at a temperature of 110± 5°C for sufficient time to remove all combined water by reaching a constant mass.

Stone Sand 2SS. Sand manufactured from stone sources. These stone sources must meet the physical requirements for coarse aggregate 6A prior to crushing. The Engineer will only allow stone sand in concrete base course or structural concrete not exposed to vehicular traffic.

Soft Particles. Structurally weak particles or particles experiencing environmental deterioration, including shale, siltstone, friable sandstone, ochre, coal, and clay ironstone.

Crushed Particles. Particles with at least one fractured face. The contract will specify the number of fractured faces based on required use. Unless otherwise specified, one fractured face is considered a crushed particle.

Base Fineness Modulus. The average fineness modulus typical of the source for a specific fine aggregate.

Cobblestones (Cobbles). Rock fragments, usually rounded or semi rounded, with an average dimension between 3 inches and 10 inches.

902.03. Coarse Aggregates for Portland Cement Concrete. For coarse aggregates for portland cement concrete, use Michigan Class 4AA, 6AAA, 6AA, 6A, 17A, and 26A coarse aggregate produced from natural aggregate, iron blast furnace slag, or reverberatory furnace slag sources.

The Contractor may produce Michigan Class 6A, 17A and 26A from crushed portland cement concrete for uses specified in this subsection.

Ensure the relative density (OD) falls within the limits established by freeze-thaw testing.

Provide coarse aggregates for portland cement concrete in accordance with Table 902-1, Table 902-2, and this subsection.

A. **Slag Coarse Aggregate.** Use slag coarse aggregate consisting of iron blast furnace slag or reverberatory furnace slag with a dry (loose measure) unit weight of at least 70 pounds per cubic foot in accordance with MTM 123.

B. **Crushed Concrete Coarse Aggregate.** Use Department owned concrete on the project to produce crushed concrete coarse aggregate. The Contractor may use crushed concrete coarse aggregate in the following concrete mixtures: curb and gutter, valley gutter, sidewalk, concrete barriers, driveways, temporary pavement, interchange ramps with a commercial ADT less than 250, and concrete shoulders.

Do not use crushed concrete coarse aggregate in the following: mainline pavements or ramps with a commercial ADT greater than or equal to 250, concrete base course, bridges, box or slab culverts, headwalls, retaining walls, pre-stressed concrete, or other heavily reinforced concrete.

Avoid contamination with non concrete materials, including joint sealants, HMA patching, and base layer aggregate or soil, when processing crushed concrete coarse aggregate. Limit contamination particles retained on the ⅜ inch sieve to no greater than 3.0 percent, based on a particle count of the total retained ⅜ inch aggregate particles. The Engineer will reject any aggregate stockpile contaminated with building brick, wood, or plaster. Steel reinforcement pieces may remain in the stockpile if they can pass the maximum grading sieve size without aid. Ensure the fine aggregate portion of the gradation does not exceed a liquid limit of 25.0 percent or a plasticity index of 4.0.

The Engineer will test the freeze thaw durability of crushed concrete coarse aggregate for each project. After the Department's central laboratory receives the aggregate samples from the supplier, each test requires at least three months for testing.

Crush concrete ensuring it maintains uniform aggregate properties with no apparent segregation. The relative density (OD) must not vary more than ±0.05 nor the absorption by more than ±0.40. Separate crushed concrete aggregate according to the original coarse aggregate type, except in the following situations:

1. If the weighed quantities of each aggregate type retained on the No. 4 sieve do not differ from the average quantities obtained from at least three representative samples by more than 10 percent; or
2. If using aggregate produced from concrete pavement with only one type of aggregate, but repaired with concrete patches with a different aggregate type.

C. **Aggregates for Optimized Gradation.**

1. **Coarse Aggregate Requirements.**

   a. Coarse aggregate includes all aggregate particles greater than or retained on the $^3/_4$ inch sieve.
   b. The physical requirements for the coarse aggregate are as specified in Table 902-2 as follows:

      i. High performance concrete mixtures – Class 6AAA
      ii. All other concrete mixtures requiring optimized gradation – Class 6AA

   c. The maximum Loss by Washing per MTM 108 is 2.0 percent for materials produced entirely by crushing rock, boulders, cobbles, slag or concrete; otherwise 1.0 percent.
   d. The maximum 24 hour soak absorption is 2.50 percent.

2. **Intermediate Aggregate Requirements.**

   a. Intermediate aggregate includes all aggregate particles passing the $^3/_4$ inch sieve through those retained on the No. 4 sieve.
   b. The physical requirements for intermediate aggregate are as specified in Table 902-2 for Class 26A.
   c. The maximum Loss by Washing per MTM 108 is 3.0 percent.

3. **Fine Aggregate Requirements.**

   a. Fine aggregate includes all aggregates particles passing the No. 4 sieve.
   b. The fine aggregate must meet the requirements of subsection 902.08.

902.04. Chip Seal Aggregates. For single chip seal, use 34CS aggregate with a maximum moisture content in accordance with Table 902-8 and as described in MDOT procedures for Aggregate Inspection, calculated in accordance with section 109 at the time of placement, and in accordance with Table 902-7, and Table 902-8.

For double chip seal, use CS-T aggregate with a maximum moisture content in accordance with Table 902-8 and as described in MDOT procedures for Aggregate Inspection, calculated in accordance with section 109 at the time of placement, and in accordance with Table 902-7, and Table 902-8.

902.05. Dense-Graded Aggregates for Base Course, Surface Course, Shoulders, Approaches and Patching. When necessary, combine fine aggregate with natural aggregate, iron blast furnace slag, reverberatory furnace slag, or crushed concrete to produce Michigan Class 21AA, 21A, 22A, 23A and 23AA dense graded aggregates in accordance with Table 902-1, Table 902-2, and this subsection.

The use of crushed concrete is prohibited on the project within 100 feet of any water course (stream, river, county drain, etc.) and lake, regardless of the application or location of the water course or lake relative to the project limits.

Dense graded aggregate produced by crushing portland cement concrete must not contain more than 5.0 percent building rubble or hot mix asphalt by particle count. The Department defines building rubble as building brick, wood, plaster, or other material. The Engineer will allow pieces of steel reinforcement capable of passing through the maximum grading sieve size without aid.

Do not use Class 21AA, 21A and 22A dense graded aggregate produced from crushing portland cement concrete to construct an aggregate base or an aggregate separation layer when the dense-graded layer drains into an underdrain, unless at least one of the following conditions apply:

A. A vertical layer of at least 12 inches of granular Class I, II, IIA, or IIAA exists between the dense graded aggregate layer and an underdrain; or

B. A geotextile liner or blocking membrane, that will be a barrier to leachate, placed between the crushed concrete and the underdrain.

Only produce Class 23A dense graded aggregate from steel furnace slag for use as an unbound aggregate surface course or as an unbound aggregate shoulder.

902.06. Open-Graded Aggregates for Earthwork, Open-Graded Drainage Courses and Underdrains. Use Michigan Class 4G, 34G, and 34R open graded aggregates produced from natural aggregate, iron blast furnace slag, or reverberatory furnace slag, in accordance with Table 902-1and Table 902-2. Class 4G can be produced from crushed concrete.

The use of crushed concrete is prohibited on the project within 100 feet of any water course (stream, river, county drain, etc.) and lake, regardless of the application or location of the water course or lake relative to the project limits.

Open graded aggregate 4G produced by crushing portland cement concrete must not contain more than 5.0 percent building rubble or hot mix asphalt by particle count. The Department defines building rubble as building brick, wood, plaster, or other material. The Engineer will allow pieces of steel reinforcement capable of passing through the maximum grading sieve size without aid.

902.07. Granular Materials for Fill and Subbase. Use granular materials consisting of sand, gravel, crushed stone, iron blast furnace slag, reverberatory furnace slag or a blend of aggregates in accordance with Table 902-3 and this subsection.

The Contractor may make the following substitutions:

A. Class I, Class IIAA, or Dense-Graded Aggregate 21A, 21AA and 22A material for Class II material;
B. Class I, Class II, Class IIA, Class IIAA, Class IIIA or Dense-Graded Aggregate 21A, 21AA and 22A material for Class III material;
C. Class I material for Class IIAA material; and
D. Dense-Graded Aggregate 21A, 21AA and 22A material for Class IIA.

Do not use material with cementitious properties or with permeability characteristics that do not meet design parameters for subbase.

Granular material produced from crushed portland cement concrete is not permitted.

The Engineer may allow the placement of granular material produced from steel furnace slag below the top 3 feet of the embankment and fill.

902.08. Fine Aggregates for Portland Cement Concrete and Mortar. Test for organic impurities in accordance with AASHTO T21. The aggregate must not produce a color darker than Organic Plate No. 3 (Gardener Color Standard No. 11). The Engineer may approve the use of fine aggregate that fails the test for organic impurities based on one of the following:

A. The discoloration resulted from small quantities of coal, lignite, or similar discrete particles, or

B. The tested concrete develops a relative seven-day strength of at least 95 percent in accordance with AASHTO T71.

Uniformly grade the aggregate from coarse to fine in accordance with Table 902-4. Fine aggregate 2NS, 2SS, and 2MS must meet fineness modulus requirements in Table 902-4.

Do not use crushed portland cement concrete fine aggregate in concrete mixtures.

902.09. Aggregate General Requirements for HMA Mixtures. Use aggregate materials meeting the requirements of Table 902-5 and Table 902-6 for the HMA mix number and type required.

A. **Coarse Aggregates.** For HMA mixtures, use natural aggregate, iron blast furnace slag, reverberatory furnace slag, steel furnace slag, or crushed concrete as coarse aggregate.

B. **Fine Aggregates.** For HMA mixtures, use natural aggregate, iron blast furnace slag, reverberatory furnace slag, steel furnace slag, manufactured fine aggregate, or a uniformly graded blend as fine aggregate. Fine aggregates must be clean, hard, durable, uncoated, and free of clay lumps, organic matter, soft or flakey material and other foreign matter.

902.10. Surface Treatment Aggregates.

A. **Paver-Placed Surface Seal.** For paver-placed surface seal, use aggregate 27SS or 30SS consisting of material meeting the requirements of subsection 902.09.B and in accordance with Table 902-7 and Table 902-8.

B. **Micro-Surfacing.** For micro surfacing, use 2FA and 3FA aggregates consisting of crushed material from a quarried stone, natural gravel, slag source, or a blend in accordance with Table 902-7 and Table 902-8.

C. **Slurry Seal.** For slurry seal, use 2FA aggregate consisting of crushed material from a quarried stone, natural gravel, slag source, or a blend in accordance with Table 902-7 and Table 902-8.

902.11. Mineral Filler for HMA Mixtures. For HMA mixtures, use dry, 3MF mineral filler consisting of limestone dust, dolomite dust, fly ash collected by an electrostatic precipitation method, slag, or hydrated lime with 100 percent passing the No. 30 sieve and 75 percent to 100

percent passing the No. 200 sieve. Mineral filler must be from a Department approved source or must be tested on a per project basis. The free carbon content of the fly ash sample must not exceed 12 percent by weight as measured by the loss on ignition test in accordance with ASTM C311/C311M.

Table 902-1
Grading Requirements for Coarse Aggregates, Dense-Graded Aggregates, and Open-Graded Aggregates

Material Type	Series/ Class	Item of Work by Section Number (Sequential)	Sieve Analysis (MTM 109) Total Percent Passing (a)										Loss by Washing (MTM 108) % Passing
			2½ in	2 in	1½ in	1 in	¾ in	½ in	⅜ in	No. 4	No. 8	No. 30	No. 200 (a)
Coarse Aggregates	6 AAA (b)	602, 1004	—	—	100	90–100	60–85	30–60	—	0–8	—	—	≤1.0 (c)
	6 AA (b)	406, 602, 706, 708, 806, 1004, 1006	—	—	100	95–100	—	30–60	—	0–8	—	—	≤1.0 (c)
	6 A	206, 401, 402, 406, 602, 603, 706, 806, 1004, 1006	—	—	100	95–100	—	30–60	—	0–8	—	—	≤1.0 (c)
	17 A	401, 406, 706, 708, 1004		—	—	100	90–100	50–75	—	0–8	—	—	≤1.0 (c)
	25 A		—	—	—	—	100	95–100	60–90	5–30	0–12	—	≤3.0
	26 A	706, 712, 1004, 1006	—	—	—	—	100	95–100	60–90	5–30	0–12	—	≤3.0
	29 A	1004	—	—	—	—	—	100	90–100	10–30	0–10	—	≤3.0
Dense-Graded Aggregates	21 AA	302, 304, 305, 306, 307	—	—	100	85–100	—	50–75	—	—	20–45	—	4–8 (d,e)
	21 A	302, 305, 306, 307	—	—	100	85–100	—	50–75	—	—	20–45	—	4–8 (d,e)
	22 A	302, 305, 306, 307	—	—	—	100	90–100	—	65–85	—	30–50	—	4–8 (d, e, f)
	23 A	306, 307	—	—	—	100	—	—	60–85	—	25–60	—	9–16 (e)
	23AA	306, 307	—	—	—	100	—	—	60–85	—	25–60	—	9–16 (e)
Open-Graded Aggregates	4 G (g)	303	—	—	100	85-100	—	45-65	—	—	15-30	6-18	≤6.0
	4 G (h)	303	—	—	100	85-100	—	45-70	—	—	15-35	8-22	≤8.0
	34 R	401, 404, 406	—	—	—	—	—	100	90–100	—	0–5	—	≤3.0
	34 G	404, 406	—	—	—	—	—	100	95–100	—	0–5	—	≤3.0

a. Based on dry weights.
b. Class 6AAA will be used exclusively for all mainline and ramp concrete pavement when the directional commercial ADT is greater than or equal to 5,000 vehicles per day. Other requirements apply for high performance concrete.
c. Loss by Washing will not exceed 2.0 percent for material produced entirely by crushing rock, boulders, cobbles, slag, or concrete.
d. When used for aggregate base courses, surface courses, shoulders and approaches and the material is produced entirely by crushing rock, boulders, cobbles, slag, or concrete, the maximum limit for Loss by Washing must not exceed 10 percent.
e. The limits for Loss by Washing of dense-graded aggregates are significant to the nearest whole percent.
f. For aggregates produced from sources located in Berrien County, the Loss by Washing must not exceed 8 percent and the sum of Loss by Washing and shale particles must not exceed 10 percent.
g. Gradation prior to placement and compaction.
h. Gradation compacted in-place, sampled from the grade in accordance with MTM 119.

DRAFT – July 2020

Table 902-2
Physical Requirements for Coarse Aggregates, Dense-Graded Aggregates, and Open-Graded Aggregates (m)

Material Type	Series/ Class	Gravel, Stone, and Crushed Concrete						Slag (a)		All Aggregates
		Crushed Material, % min (MTM 117)	Loss, % max, Los Angeles Abrasion (MTM 102)	Soft Particles, % max (MTM 110)	Chert, % max (MTM 110)	Sum of Soft Particles and Chert, % max (MTM 110)	Freeze-Thaw Dilation, % per 100 cycle max (MTM 115) (b)	Sum of Coke and Coal Particles, % max (MTM 110)	Freeze-Thaw Dilation, % per 100 cycles max (MTM 115) (b)	Flat and Elongated Particles, ratio % max (ASTM D4791) (MTM 130)
Coarse Aggregates (l)	6 AAA	—	40	2.0 (c)	2.5	4.0	0.040 (d)	1.0	0.040 (d)	3:1–15.0 (j)
	6 AA (e)	—	40	2.0 (c)	—	4.0	0.067 (f)	1.0	0.067	—
	6 A (e)	—	40	3.0 (c)	7.0	9.0	0.067	1.0	0.067	—
	17 A (e)	—	40	3.5 (c)	8.0	10.0	0.067 (f)	1.0	0.067	—
	25 A	95	45	8.0 (g)	—	8.0	—	1.0	—	3:1–20.0 (k)
	26 A (e)	—	40	2.0 (c)	—	4.0	0.067	1.0	0.067	—
	29 A	95	45	8.0 (g)	—	8.0	—	1.0	—	3:1–20.0 (k)
Dense-Graded Aggregates (h)	21 AA	95	50	—				—		—
	21 A	25	50	—				—		—
	22 A	25	50	—				—		—
	23 A	25	50	—				—		—
	23AA	95	50	—				—		—
Open-Graded Aggregates	4 G	95	45 (i)	—				—		—
	34 R	≤20	45 (i)	—				—		—
	34 G	100	45 (i)	—				—		—

a. Iron blast furnace and reverberatory furnace slag must contain no free (unhydrated) lime.
b. If the relative density OD is more than 0.04 less than the relative density OD of the most recently tested freeze-thaw sample, the aggregate will be considered to have changed characteristics and be required to have a new freeze-thaw test conducted prior to use on Department projects.
c. Clay-ironstone particles must not exceed 1.0 percent for 6AAA, 6AA and 26A, and 2.0 percent for 6A and 17A. Clay-ironstone particles are also included in the percentage of soft particles for these aggregates.
d. Maximum freeze-thaw dilation is 0.067 when the directional commercial ADT is less than 5000 vehicles per day. Maximum dilation is 0.040 for all high performance concrete.
e. Except for pre-stressed beams, the sum of soft and chert particles may be up to 3.0 percent higher than the values determined from the sample tested for freeze-thaw durability. However, under no circumstances will the deleterious particle percentages exceed the specification limits in Table 902-2. In addition, a source may be restricted to a minimum percent crushed not to exceed 15 percent less than the percent crushed in the freeze-thaw sample. When the freeze-thaw dilation is between 0.040 and 0.067 percent per 100 cycles more restrictive limits will be applied.
f. Maximum dilation of 0.010 for pre-stressed concrete beams.
g. Friable sandstone is included in the soft particle determination for chip seal aggregates.
h. Quarried carbonate (limestone or dolomite) aggregate may not contain over 10 percent insoluble residue finer than No. 200 sieve when tested in accordance with MTM 103.
i. If a blend of different aggregate sources, the abrasion value applies to each source.
j. ASTM D4791 Section 8.4 will be followed. The test will be performed on the material retained down to and including the 3/8 inch sieve.
k. ASTM D4791 Section 8.4 will be followed. The test will be performed on the material retained down to and including the No. 4 sieve.
l. Grade 3500 concrete requires an optimized aggregate gradation as specified in section 604. Use aggregates only from geologically natural sources.
m. See subsections 902.03.B, 902.05, and 902.06 for additional physical requirements for Coarse Aggregate, Dense-Graded Aggregates, and Open-Graded Aggregates, respectively.

DRAFT – July 2020

Table 902-3
Grading Requirements for Granular Materials

Material	Sieve Analysis (MTM 109), Total % Passing (a)									Loss by Washing % Passing No. 200 (a), (b)
	6 in	3 in	2 in	1 in	½ in	⅜ in	No. 4	No. 30	No. 100	
Class I	—	—	100	—	45–85	—	20–85	5–30		0–5
Class II (c)	—	100	—	60–100	—	—	50–100	—	0–30	0–7
Class IIA (c)	—	100	—	60–100	—	—	50–100	—	0–35	0–10
Class IIAA	—	100	—	60–100	—	—	50–100	—	0–20	0–5
Class III	100	95–100	—	—	—	—	50–100	—	—	0–15
Class IIIA	—	—	—	—	—	100	50–100	—	0–30	0–15

a. Test results based on dry weights.
b. Use test method MTM 108 for Loss by Washing.
c. Except for use in granular blankets, Class IIA granular material may be substituted for Class II granular material for projects located in the following counties: Arenac, Bay, Genesee, Gladwin, Huron, Lapeer, Macomb, Midland, Monroe, Oakland, Saginaw, Sanilac, Shiawassee, St. Clair, Tuscola, and Wayne counties.

DRAFT – July 2020

Table 902-4 Grading Requirements for Fine Aggregates									
	Sieve Analysis (MTM 109), Total Percent Passing (a)								
Material	**⅜ in**	**No. 4**	**No. 8**	**No. 16**	**No. 30**	**No. 50**	**No. 100**	**Loss by Washing % Passing No. 200** (a), (b)	**Fineness Modulus Variation** (c)
2NS	100	95–100	65–95	35–75	20–55	10–30	0–10	0–3.0	±0.20 (d)
2SS (e)	100	95–100	65–95	35–75	20–55	10–30	0–10	0–4.0	±0.20 (d)
2MS	—	100	95–100	—	—	15–40	0–10	0–3.0	±0.20 (d)

a. Test results based on dry weights.
b. Use test method MTM 108 for Loss by Washing.
c. Aggregate having a fineness modulus differing from the base fineness modulus of the source by the amount exceeding the maximum variation specified in the table, will be rejected. Use ASTM C136.
d. The base fineness modulus will be supplied by the aggregate producer at the start of each construction season and be within the range of 2.50 to 3.35. The base FM, including the permissible variation, will be within the 2.50 to 3.35 range.
e. Quarried carbonate (limestone or dolomite) cannot be used for any application subject to vehicular traffic.

Table 902-5 Superpave Final Aggregate Blend Gradation Requirements					
	Percent Passing Criteria (control points)				
	Mixture Number				
Standard Sieve	**5**	**4**	**3 Leveling Course**	**3 Base Course**	**2**
1½ inch	—	—	—	—	100
1 inch	—	—	100	100	90–100
3/4 inch	—	100	90–100	90–100	≤90
1/2 inch	100	90–100	≤90	≤90	—
3/8 inch	90–100	≤90	—	—	—
No. 4	≤90	—	—	—	—
No. 8	47-67	39-58	35–52	23–52	19–45
No. 16	—	—	—	—	—
No. 30	—	—	—	—	—
No. 50	—	—	—	—	—
No. 100	—	—	—	—	—
No. 200	2.0–10.0	2.0–10.0	2.0–8.0	2.0–8.0	1.0–7.0

Table 902-6
Superpave Final Aggregate Blend Physical Requirements

Est. Traffic (million ESAL)	Mix Type	Percent Crushed Minimum Criteria		Fine Aggregate Angularity Minimum Criteria		% Sand Equivalent Minimum Criteria		Los Angeles Abrasion % Loss Maximum Criteria (c)		% Soft Particles Maximum Criteria (a)		% Flat and Elongated Particles Maximum Criteria (b)	
		Top & Leveling Courses	Base Course	Top & Leveling Courses	Base Course	Top & Leveling Courses	Base Course	Top & Leveling Courses	Base Course	Top & Leveling Courses	Base Course	Top & Leveling Courses	Base Course
< 0.3	EL	55/—	—	—	—	40	40	45	45	10	10	—	—
≥0.3 - < 3	EML	75/—	50/—	43	40	40	40	35	40	5	5	10	10
≥3 - <30	EMH	90/85	80/75	45	40	45	45	35	35	3	4.5	10	10
≥30 - <100	EH	100/100	95/90	45	45	50	50	35	35	3	4.5	10	10

(a) Soft particles maximum is the sum of the shale, siltstone, ochre, coal, clay-ironstone and particles that are structurally weak or are non-durable in service.
(b) Maximum by mass with a 1:5 aspect ratio.
(c) If a blend of different aggregate sources, the abrasion value applies to each source.
Note: "90/85" denotes that 90 percent of the coarse aggregate has one fractured face and 85 percent has at least two fractured faces.

DRAFT – July 2020

Table 902-7
CPM Final Aggregate Blend Gradation Requirements

Material	Mechanical Analysis, Total Percent Passing										
	¾ in	**½ in**	**⅜ in**	**¼ in**	**No. 4**	**No. 8**	**No. 16**	**No. 30**	**No. 50**	**No. 100**	**No. 200** (a)
27SS	100	85–100	55–80	—	22–38	19–32	15–24	11–18	8–14	5–10	4–7 (b)
30SS	—	100	85–100	—	22–38	19–32	15–24	11–18	8–14	5–10	4–7 (b)
34CS (c)	100	100	90–100	—	0–15	0–5	—	—	—	—	≤2
CS-T (c)	100	100	100	85–100	—	0–15	—	—	—	—	≤2
2FA	—	—	100	—	90–100	65–90	45–70	30–50	18–30	10–21	5–15 (b)
3FA	—	—	100	—	70–90	45–70	28–50	19–34	12–25	7–18	5–15 (b)

a. Includes mineral filler.
b. No. 200 limits are significant to the nearest whole percent.
c. All aggregate must be washed.

DRAFT – July 2020

Table 902-8
CPM Aggregate Blend Physical Requirements

Material		Percent Crushed (Min) MTM 117 (k)	Angularity Index (Min) MTM 118	Uncompacted Void (Min) AASHTO T304	Los Angeles Abrasion (% Loss Max) MTM 102 (f)	Aggregate Wear Index (AWI) (Min) MTM 111, 112 (h)	Soft Particles (% Max) MTM 110	Sand Equivalent (% Min) AASHTO T176	Flat, Elongated, or Flat and Elongated (% Max) ASTM D4791	Absorp. (% Max) AASHTO T85	Mico-Deval (% Loss Max) AASHTO T327
27SS (e)		100 / 90	—	40	35	260	5.0 (a)	45	25.0 (b)	3.0	18
30SS (e)		100 / 90	—	40	35	260	5.0 (a)	45	25.0 (b)	3.0	18
34CS (j)	ADT ≥ 4000	100 / 90	—	—	35 (g)	260 (i)	3.5 (a)	—	15.0 (b)	—	—
	ADT < 4000	95 / 85	—	—	35 (g)	220	3.5 (a)	—	15.0 (b)	—	—
CS-T (j)	ADT ≥ 4000	100 / 90	—	—	35 (g)	260 (i)	3.5 (a)	—	—	—	—
	ADT < 4000	95 / 85	—	—	35 (g)	220	3.5 (a)	—	—	—	—
2FA		—	4.0 (c)	—	45	260	—	60 (d)	—	—	—
3FA		—	4.0	—	45	260	—	60	—	—	—

a. Sum of shale, siltstone, clay-ironstone, and structurally weak.
b. For material retained on the No. 4 sieve and above, ensure the ratio between length to width, width to thickness, and length to thickness is no greater than 3:1.
c. Angularity Index must exceed 2.0 for at least 50 percent of the blending sands for slurry seal applications.
d. Does not apply to slurry seals.
e. Must be 100% virgin aggregate.
f. If a blend of different aggregate sources, the abrasion value applies to each source.
g. Natural aggregate. L.A. Abrasion maximum loss of 45% for Iron Blast-Furnace slag aggregate.
h. Does not apply to a shoulder chip seal or interlayer application.
i. Single chip seals. For double chip seals, a 260 min. AWI of a 60/40 weighted average in which the top course will be weighted at 60% and base course will be weighted at 40% with the higher AWI aggregate as the top course.
j. Moisture content at time of placement ≤ 4%.
k. “90 / 85” denotes that 90 percent of the coarse aggregate has one fractured face and 85 percent has at least two fractured faces.

DRAFT – July 2020

Section 903. ADMIXTURES AND CURING MATERIALS FOR CONCRETE

903.01. Air-Entraining Admixtures. Select liquid air entraining admixtures for portland cement concrete from the Qualified Products List.

903.02. Liquid Chemical Admixtures. Select liquid chemical admixtures for use in portland cement concrete from the Qualified Products List. Liquid chemical admixtures must not contain a chloride ion content greater than 0.5 percent by weight.

The Department uses the following ASTM C494/C494M terms for chemical admixtures:

Table 903-1
ASTM C494/C494M Terms for Chemical Admixtures

Type	Term
A	Water reducing admixtures
C	Accelerating admixtures
D	Water reducing and retarding admixtures
E	Water reducing and accelerating admixtures
F	Water reducing, high range admixtures
G	Water reducing, high range, and retarding admixtures

The Department refers to water-reducing, mid-range admixtures, not included in ASTM C494/C494M, as Type MR.

903.03. Latex Admixtures. Formulated latex admixture for modifying mortar or concrete mixtures must be a non-toxic, film forming, polymeric emulsion to which all stabilizers are added at the point of manufacture. Latex admixtures must be homogeneous and uniform in composition.

A. **Physical Properties.** White latex styrene butadiene modifier must have between 46.0 percent and 49.0 percent solids, a pH, as shipped, between 8.5 and 11.0, and a shelf life of at least 2 years.

B. **Storage.** Protect latex admixtures from freezing. Do not expose latex admixtures to temperatures greater than 85 °F for more than 10 days.

903.04. Calcium Chloride Concrete Accelerators. Do not use calcium chloride in prestressed concrete, superstructure concrete, concrete for bridge railings, or concrete containing galvanized steel or aluminum.

Flake or pellet calcium chloride for on-the-job preparation of admixture solutions must meet the requirements of ASTM D98 for 77 percent grade or 94 percent grade. Determine the percentage of calcium and magnesium chlorides in accordance with ASTM D345. Provide flake or pellet Type S (solid) material.

Calcium chloride admixture, delivered to the job in solution, must conform to the following chemical composition:

A. From 32.0 percent to 35.0 percent calcium chloride, $CaCl_2$ (anhydrous);
B. No greater than 1.0 percent total magnesium as $MgCl_2$;
C. No greater than 2.0 percent total alkali chlorides calculated as NaCl; and
D. No greater than 0.5 percent other impurities.

903.05. Polypropylene Fibers. Use 100 percent virgin polypropylene fibers, ¾ inch long, that meet the requirements of ASTM C1116/C1116M, Type III.

903.06. Concrete Curing Materials for Pavements.

A. **White Membrane Curing Compound.** White membrane curing compound must meet the requirements of ASTM C309, Type 2, and be packaged in clean containers.

Before use and before transferring the compound between containers, agitate the compound to a uniform consistency and ensure pigment is uniformly suspended.

B. **Transparent Membrane Curing Compound for Base Course.** Transparent membrane curing compound must meet the requirements of ASTM C309, Type 1-D, Class B with fugitive dye.

903.07. Concrete Curing Materials for Structures.

A. **White Membrane Curing Compound for Bridge Decks.** Provide white-pigmented, modified, linseed oil based material either water soluble or an emulsion type that meets the requirements of ASTM C309, Type 2 except that the reflectance requirement and drying time do not apply. Compound must be packaged in clean containers.

Before transferring the compound between containers and applying, agitate the compound to a uniform consistency and ensure uniform suspension of the pigment.

B. **Transparent Membrane Curing Compound.** Transparent membrane curing compound must meet the requirements of ASTM C309, Type 1-D, Class B, with fugitive dye.

C. **Insulating Blankets.** Insulating blankets must meet Federal Specification HH-1-521f, Insulation, Building, Mineral-Wool; Batts, Loose-Fill, and Granular-Fill, Type 1-Batts, Class C, with enveloping membranes. Blankets must have liners that completely enclose and are bonded to both sides of the insulating mat. Blankets must have thicknesses or R-values meeting the requirements of Table 706-2.

Insulating blanket must have a thermal conductivity (k) no greater than 0.27 BTU per hour per square foot temperature gradient of 1 °F per inch of thickness at a mean temperature of 75 °F when tested in accordance with ASTM C177.

D. **Polystyrene Insulation.** Expanded polystyrene must be cut from preformed material with an average cell diameter no greater than 0.04 inch and as specified in Table 903-2:

Table 903-2 Polystryene Insulation Specifications		
Property	**Specification**	**Test Method**
Density	≥0.90 lb/ft³	ASTM C303
Compressive Strength	≥9.0 psi	ASTM D1621
Flexural Strength	≥25.0 psi	ASTM C203
Water Absorption	≤2.0% by volume	ASTM C272/C272M
Thermal Conductivity	≤0.27 BTU/hr/ft² (a)	ASTM C177
a. For a temperature gradient of 1 °F per inch of thickness at a mean temperature of 75 °F		

Section 904. ASPHALTIC MATERIALS

904.01. General Requirements. The certification program described in the Materials Quality Assurance Procedures Manual governs the asphalt binders in Table 904-2 and the emulsified asphalts in Table 904-4, Table 904-5, and Table 904-6. The Contractor may use materials listed in Table 904-2 through Table 904-6 on MDOT projects, if tested and approved for use in accordance with MDOT procedures.

The Engineer will notify the Contractor and the supplier to correct materials if test results for the requirements from Table 904-2, Table 904-3, Table 904-4, Table 904-5 and Table 904-6 deviate from the specified range.

Asphaltic materials testing will be in accordance with the specified ASTM, AASHTO or Department methods, as modified by this section.

904.02. Application Temperatures. Apply asphaltic materials at temperatures specified in Table 904-7.

904.03. Specific Requirements.

A. **Asphalt Binder.** Asphalt binder must be homogeneous, water free, and must not foam when heated to the maximum temperature specified in Table 904-7 for the material required.

If using an anti-foaming agent, use a dimethyl polysiloxane type silicone material, preferably 1,000 centistoke viscosity grade, unless otherwise approved by the Engineer. Do not add amounts greater than 5 parts per million unless approved by the Engineer. Mechanically mix the asphalt binder after adding anti foaming agent while in storage at the asphalt plant.

Asphalt cement must be prepared by refining crude petroleum with or without the addition of modifiers. Asphalt cement prepared with used motor oil is not allowed.

The Engineer will allow organic, virgin or recycled modifiers dissolved, dispersed, or reacted in asphalt cement to enhance performance.

Asphalt binder must be at least 99.0 percent soluble in accordance with AASHTO T44 or ASTM D5546.

This specification is not applicable for asphalt binders in which fibers or other discrete particles are larger than 250 micrometers in size.

B. **Cut-Back Asphalt.** Cutback asphalt must meet the requirements of Table 904-3 and this subsection.

Liquid asphalt must be homogeneous, must not foam when heated to the maximum required temperature and must be water-free unless otherwise required.

Caution: Use caution when heating cut-back asphalt, especially RC and MC asphaltic products containing naphtha and kerosene cutback asphalt, since the temperatures for use are near or above the flash points. If using heated cutbacks, keep open flames away from pugmill enclosures, tank car domes, distributor tank openings, and storage tank openings.

C. **Emulsified Asphalt.** Emulsified asphalt must meet the requirements of either Table 904-4, Table 904-5, or Table 904-6 and be made from asphalt having a negative spot test result using 35% xylene / 65% heptane solvent, Aniline No: 30 C ± 2 degrees, AASHTO T102. It must be homogeneous and show no separation of asphalt after thorough mixing, for a period of at least 30 days after delivery.

Table 904-2
Performance Graded Asphalt Binder Specification

Performance Grade	**PG 46**			**PG 52**							**PG 58**				
	−34	−40	−46	−10	−16	−22	−28	−34	−40	−46	−16	−22	−28	−34	−40
Avg 7-day Max. Pavement Design Temp, °C (a)	46			52							58				
Minimum Pavement Design Temp, °C (a)	−34	−40	−46	−10	−16	−22	−28	−34	−40	−46	−16	−22	−28	−34	−40
Original Binder															
Flash Point Temp, T48/D 92: Min.	230 °C			230 °C							230 °C				
Viscosity, T316/D4402: Max. 3 Pa•s, Test Temp (b)	135 °C			135 °C							135 °C				
Dynamic Shear, T315/D7175: G*/sin θ, Min. 1.00 kPa Test Temp at 10 rad/s (c, g)	46 °C			52 °C							58 °C				
Rolling Thin Film Oven (T240/D2872)															
Mass Loss, Max. Percent	1.00			1.00							1.00				
Dynamic Shear, T315/D7175: G*/sin θ, Min. 2.20 kPa Test Temp at 10 rad/s (g)	46 °C			52 °C							58 °C				
Pressure Aging Vessel Residue (R28/D6521)															
PAV Aging Temp (d)	90 °C			90 °C							100 °C				
Dynamic Shear, T315/D7175: G*sin θ, Max. 5,000 kPa Test Temp at 10 rad/s, °C (g)	10	7	4	25	22	19	16	13	10	7	25	22	19	16	13
Physical Hardening (e)	Report			Report							Report				
Creep Stiffness, T313/D6648: S, Max. 300 MPa, m-value, Min. 0.300 Test Temp at 60 s, °C	−24	−30	−36	0	−6	−12	−18	−24	−30	−36	−6	−12	−18	−24	−30

Table 904-2 Performance Graded Asphalt Binder Specification (Continued)												
Performance Grade	**PG 64**						**PG 70**					
	−10	−16	−22	−28	−34	−40	>−10	−16	−22	−28	−34	−40
Avg 7 day Max. Pave Design Temp (a)	64 °C						70 °C					
Minimum Pavement Design Temp, °C	−10	−16	−22	−28	−34	−40	−10	−16	−22	−28	−34	−40
Original Binder												
Flash Point Temp, T48/D92: Min.	230 °C						230 °C					
Viscosity, T316/D4402: Max. 3 Pa•s, Test Temp (b)	135 °C						135 °C					
Dynamic Shear, T315/D7175: G*/sin θ, Min. 1.00 kPa Test Temp at 10 rad/s (c, g)	64 °C						70 °C					
Rolling Thin Film Oven (T240/D2872)												
Mass Loss, Max. Percent	1.00						1.00					
Dynamic Shear, T315/D7175: G*/sin θ, Min. 2.20 kPa Test Temp at 10 rad/s (g)	64 °C						70 °C					
Pressure Aging Vessel Residue (R28/D6521)												
PAV Aging Temp, °C (d)	100						100 (110)					
Dynamic Shear, T315/D7175: G*sin θ, Max. 5,000 kPa Test Temp at 10 rad/s, °C (g)	31	28	25	22	19	16	34	31	28	25	22	19
Physical Hardening (e)	Report						Report					
Creep Stiffness, T313/D6648: S, Max. 300 MPa, m-value, Min. 0.300 Test Temp at 60 s, °C	0	−6	−12	−18	−24	−30	0	−6	−12	−18	−24	−30

DRAFT – July 2020

Table 904-2 Performance Graded Asphalt Binder Specification (Continued)										
Performance Grade	**PG 76**					**PG 82**				
	−10	−16	−22	−28	−34	−10	−16	−22	−28	−34
Avg 7 day Max. Pave Design Temp (a)	76 °C					82 °C				
Minimum Pavement Design Temp, °C	−10	−16	−22	−28	−34	−10	−16	−22	−28	−34
Original Binder										
Flash Point Temp, T48/D92: Min.	230 °C					230 °C				
Viscosity, T316/D 4402:Max. 3 Pa•s, Test Temp (b)	135 °C					135 °C				
Dynamic Shear, T315/D7175: G*/sin θ, Min. 1.00 kPa Test Temp at 10 rad/s (c, g)	76 °C					82 °C				
Rolling Thin Film Oven (T240/D2872)										
Mass Loss, Max. Percent	1.00					1.00				
Dynamic Shear, T315/D7175: G*/sin θ, Min. 2.20 kPa Test Temp at 10 rad/s (g)	76 °C					82 °C				
Pressure Aging Vessel Residue (R28/D6521)										
PAV Aging Temp, °C (d)	100 (110)					100 (110)				
Dynamic Shear, T315/D7175: G*sin θ, Max. 5000 kPa Test Temp at 10 rad/s, °C (g)	37	34	31	28	22	40	37	34	31	28
Physical Hardening (e)	Report					Report				
Creep Stiffness, T313/D6648: S, Max. 300 MPa, m-value, Min. 0.300 Test Temp at 60 s, °C	0	−6	−12	−18	−24	0	−6	−12	−18	−24

Table 904-2
Performance Graded Asphalt Binder Specification (Continued)

a. Pavement temperatures are estimated from air temperatures using an algorithm contained in the Superpave software program, may be provided by the specifying agency, or by following the procedures as outlined in MP2 and PP28.
b. This requirement may be waived at the discretion of the specifying agency if the supplier warrants that the asphalt binder can be adequately pumped and mixed at temperatures that meet all applicable safety standards.
c. For quality control of unmodified asphalt cement production, measurement of the viscosity of the original asphalt cement may be used or supplement dynamic shear measurements of G*/sin θ at test temperatures where the asphalt is a Newtonian fluid. The Contractor may us a standard means of viscosity measurement, including capillary (T201/D2170 or T202/D2171) or rotational viscometer (T316/D4402).
d. The PAV aging temperature is based on simulated climatic conditions and is one of three temperatures 90%C, 100%C or 110%C. The PAV aging temperature is 100%C for PG 58- and above, except in desert climates, where it is 110%C.
e. Physical Hardening – T313/D6648 is performed on a set of asphalt beams according to Section 13.1, except the conditioning time is extended to 24 h ±10 min at 10%C above the minimum performance temperature. The 24 h stiffness and m-value are reported for information purposes only.
g. G*/sin θ = high temperature stiffness and G*sin θ = intermediate temperature stiffness.

Table 904-3 Medium and Rapid Curing Cut-Back Asphalts				
Tests	**Requirements**			
	MC-30 (a)	**MC-70** (a)	**MC-250**	**RC-250**
Kinematic Viscosity, 60 °C, mm²/s, T201/D2170	30–60	70–140	250–500	250–500
Flash Point, deg °C:				
Tag Open Cup, min, T 79	37.8	37.8	—	26.7
Cleveland Open Cup, min, T 48/D 92	—	—	65.6	—
Distillation Test, T78/D402				
Distillate, % by Vol of Total Distillate to 360 °C				
To 225 °C	≤25	≤20	≤10 max	≥35
To 260 °C	40–70	20–60	15–55	≥60
To 315.5 °C	75–93	65–90	60–87	≥80
Residue from Distillation to 360 °C, min	50	55	67	65
Tests on Residue from Distillation, T78/D402:				
Penetration at 25 °C, 100 g, 5 sec, T 49/D 5	120–250	120–250	120–250	80–120
Ductility at 25 °C, cm, min T51/D113 (b)	100	100	100	100
Solubility in Trichloroethylene, %, min, T44/D2042	99.5	99.5	99.5	99.5
Spot Test, AASHTO T102 (c)	Neg.	Neg.	Neg.	Neg.
Section Number Reference	—	914	—	710, 914

a. Use MC-70 grade from June 1 to September 1 and MC-30 grade other times of the year, unless otherwise directed by the Engineer.
b. If penetration of residue exceeds 200 and ductility, at 25 °C, is less than 100, the Engineer will accept the material if ductility at 15.6 °C exceeds 100.
c. Use 35% Xylene, 65% Heptane solvent, aniline number: 30 °C ±2 °C.

Table 904-4 Anionic Emulsified Asphalts									
Anionic Emulsified Asphalts	**Requirements**								
	RS-1m	**RS-2a**	**HFRS-2**	**MS-Op**	**MS-2h**	**MS-2s**	**SS-1h**	**LTBC-1**	**LTBC-2**
Viscosity, Saybolt Furol, T59/D7496:									
At 25 °C, sec	20–100	—	—	—	—	—	20–100	15-100	15-100
At 50 °C, sec	—	50–300	50–300	15–150	50–300	50–300	—	—	—
Storage Stability Test, T59/D6930, 24 hr, % Difference max	2	2	2	3	3	3	2	1	—
Settlement & Storage Stability Test, T59/D6930, 5 day, % Difference max	—	—	—	—	—	—	—	5	5
Demulsibility, T59/D6936:									
35 ml 0.02 N CaCl2, %	20–60	≥60	≥40	—	—	—	—	—	—
50 ml 0.1 N CaC12, %	—	—	—	—	—	—	≤2	—	—
50 ml 0.02 N CaCl2, %	—	—	—	—	—	—	—	—	—
Sieve Test, T59/D6933, % max	0.10	0.10	0.10	0.10	0.10	0.10	0.10	0.30	0.30
Miscibility with Water, D244 (a)	—	—	—	—	—	—	Yes	—	—
Distillation to 260°C, T59/D6997, % by Weight:	—	—	—	—	—	—	—	—	—
Residue, Min	65	65	65	65	65	65	60	50	50
Oil Distillate, max	2	2	2	25	7	7	2	1	1
Tests on Distillation Residue:									
Penetration, 25 °C, 100 g, 5 sec, dmm, T49/D5	100–200	100–200	100–200	(b)	150–300	≥300	40–90	≤20	≤40
Float Test, sec, T50/D139:									
At 50 °C, max	—	—	—	200	—	—	—	—	—
At 60 °C, min	—	—	1,200	—	1,200	1,200	—	—	—
Ductility, 25 %C, cm, min, T51/D113	60	60	60	40 (b)	—	—	40	—	—
Solubility in Trichloroethylene, % min, T44/D2042	97.5	97.5	97.5	97.5	97.5	97.5	97.5	97.5	97.5
Ash Content, %, max, D128	2	2	2	2	2	2	2	—	—
Specific Gravity, 25/25 °C, min., T 228/D 70	0.996	0.996	0.996	—	—	—	—	—	—
Toughness/Tenacity, 25 °C, 50 cm/min., Nm, min., D 5801	—	—	—	—	—	—	—	—	—
Elastic Recovery, 10 °C, % min., T 301/D 6084	—	—	—	—	—	—	—	—	—
Softening Point, Ring & Ball, °C, min., T53/D36	—	—	—	—	—	—	—	60	—
Section Number Reference	—	401	—	501	—	501	501, 805	501, 805	501, 805

a. No appreciable coagulation or visible separation in 2 hours.
b. Heat the distillation residue (ASTM D243/D243M) to 100±15 penetration within 2 hours, and have a ductility of at least 40 cm.

Table 904-5 Cationic Emulsified Asphalts				
	Requirements			
Cationic Emulsified Asphalts	**CRS-1**	**CRS-2**	**CMS-2**	**CSS-1h**
Viscosity, Saybolt Furol, T59/D7496:				
At 25 °C, sec	—	—	—	20–100
At 50 °C, sec	20–100	100–400	50–450	—
Storage Stability Tests, T59/D6930 04, 24 hr, % Difference, max	1	1	1	1
Demulsibility, %, 35 ml 0.8% Dioctyl Sodium Sulfosuccinate, min, T 59/D 6936, (a)	40	40	—	—
Particle Charge Tests, T59/D7402 (b)	Positive	Positive	Positive	Positive
Sieve Tests, T59/D6933, % max (Distilled Water)	0.10	0.10	0.10	0.10
Distillation to 260 °C, T59/D6997, % by Weight (c)	—	—	—	—
Residue, min	60	65	65	60
Oil Distillate, max	3	3	12	—
Tests on Distillation Residue:				
Penetration, 25 °C, 100 g, 5 sec, dmm, T49/D5	100–250	100–250	100–250	40–90
Ductility, 25 °C, 5 cm/min, cm, min, T51/D113	40	40	40	40
Ductility, 4 °C, 5 cm/min, cm, T51/D113	—	—	—	—
Elastic/Recovery, 4 °C,% min, T301/D6084	—	—	—	—
Solubility in Trichloroethylene, % min, T44/D2042	97.5	97.5	97.5	97.5
Ash Content, % max, D128	2	2	2	2
Specific Gravity, 25/25 °C, min, T228/D70	0.996	0.996	—	—
Toughness/Tenacity, 25 °C, 50 cm/min., Nm, min., D5801	—	—	—	—
Elastic Recovery, 10 °C, % min., T301/D6084	—	—	—	—
Cement Mixing Test, T59/D6935, % max	—	—	—	2.0
Coating Ability and Water Resistance:				
Coating Dry Aggregate	—	—	Good	—
Coating After Spraying	—	—	Good	—
Coating Wet Aggregate	—	—	Fair	—
Coating After Spraying	—	—	Fair	—
Section Number Reference	—	—	501	501, 805
a. The Demulsibility Test must be made within 30 days from date of shipment. b. If Particle Charge Test is inconclusive, material having a maximum pH of 6.7 is acceptable.				

DRAFT – July 2020

Table 904-6
Capital Preventative Maintenance (CPM) Emulsions (h)

	Requirements					
	HFRS-2M	**CRS-2M**	**CSS-1mM**	**CSS-1hM**	**PPSS**	**CSEA**
Viscosity, Saybolt Furol, T59/D7496:						
At 25 °C, sec	—	—	20–100	20–100	20–100	—
At 50 °C, sec	75–300	75–300	—	—	—	75–400
Storage Stability Test, T59/D6930, 24 hr, % Difference max	1	1	1	1	1 (g)	1
Demulsibility, T59/D6936:						
35 ml 0.8% Dioctyl Sodium Sulfosuccinate, % min (a)	—	50	—	—	60	50
35 ml 0.02 N $CaCl_2$, %, min.	—	—	—	—	60	—
50 ml 0.1 N $CaC1_2$, %	—	—	—	—	—	—
50 ml 0.02 N $CaCl_2$, %	≥50	—	—	—	—	—
Particle Charge Tests, T59/D7402 (b)		Positive	Positive	Positive	—	Positive
Sieve Test, T59/ D6933, % max	0.10	0.10	0.10	0.10	0.05	0.10
Miscibility with Water, D244 (f)	—	—	—	—	—	—
Distillation to 260°C, T59/D6997, % by Weight:	(e)	(e)(j)	(e)	(e)	(e)	(i)
Residue, Min	65	65	62	62	63	68
Oil Distillate, ml, max, D244	2	3	—	—	2	3.0
Tests on Distillation Residue:						
Penetration, 25 °C, 100 g, 5 sec, dmm, T49/D5	80–150	80–150	70–90	40–90	80–150	70–100
Ductility, 25 °C, 5 cm/min, cm, T51/D113	—	—	40	40	—	40
Ductility, 4 °C, 5 cm/min, cm, T51/D113	—	—	35	—	—	—
Elastic/Recovery, 4 °C,% min, T301/D6084	—	—	65	—	—	—
Float Test, sec, T50/D139:						
At 50 °C, max	—	—	—	—	—	—
At 60 °C, min	1,200	—	—	—	—	—
Solubility in Trichloroethylene, % min, T44/D2042	—	—	97.5	97.5	—	97.5
Ash Content, %, max, D128	2	2	2	2	—	2
Specific Gravity, 25/25 °C, min., T228/D70	—	—	—	—	—	—
Toughness/Tenacity, 25 °C, 50 cm/min., Nm, min., D5801	4.5/3.5	4.5/3.5	—	—	—	9.0/7.0
Elastic Recovery, 10 °C, % min., T301/D6084	60%	60%	—	—	60%	75%
Tests on Residue from Evaporation, T59/D6934 (c)						
Softening Point, Ring & Ball, °C, min., T53/D36	—	—	60	57.2	—	—
Viscosity, 60C, Pa•S, T202/D2171	—	—	800 (d)	800 (d)	—	—
Section Number Reference	—	505	504	501, 504	503	505

a. The Demulsibility Test must be made within 30 days from date of shipment.
b. If Particle Charge Test is inconclusive, material having a maximum pH of 6.7 is acceptable.
c. Residue by evaporation: Oven evaporate an emulsion sample on a glass plate at a maximum temperature of 60 °C for 24 hours (forced draft oven recommended) or air dry the sample at ambient temperature for three days. Once dry, the sample is scraped from the plate using a razor blade tool.
d. The minimum Viscosity will be obtained using a Cannon-Manning Vacuum Capillary Viscometer Tube No. 14 per T202/D2171.
e. ASTM D6997, with modifications to include a 204 °C (± 6 °C) maximum temperature to be held for 15 minutes.
f. No appreciable coagulation or visible separation in 2 hours.
g. After standing undisturbed for 24 hours, the surface must show no white, milky colored substance, but must be a smooth homogenous color throughout. Any visible amount of white, milky colored substance is basis for non-acceptance.
h. Samples of emulsified asphalt will be taken in accordance with ASTM D140/D140M. Samples must be stored at a temperature of not less than 4 °C until tested.
i. Residue determination and preparation may use the alternate ASTM D6934 method, “Residue by Evaporation” so as to not destroy the properties of any polymer modifiers contained therein.

DRAFT – July 2020

Table 904-7 Temperatures for Asphaltic Materials		
Asphalt Type	**Designation**	**Temperature, °F Distributor**
Cut-Back Asphalts	RC-250	145–220
	MC-250	145–220
	MC-30	70–140
	MC-70	105–180
Emulsified	RS-1m, SS-1h, CSSmM, CRS-1, CSS-1h, CSS-1hM,	85–135
Asphalts	RS-2a, HFRS-2, HFRS-2M, MS-2h, MS-2s, CRS-2, CMS-2, CRS-2M	125–175
Asphalt Binder	All Grades	350 Maximum Mixing Temp (a)
a. Mixing temperature for all asphalt binders will be as specified by the modifier/binder producer.		

Section 905. STEEL REINFORCEMENT

905.01. General Requirements. Steel reinforcement for use in concrete structures and pavements must meet the requirements of this section.

905.02. Testing. Test steel reinforcement in accordance with ASTM A370, ASTM E8/E8M or other specified ASTM, AASHTO or Department methods, as modified by this section.

If requested, provide the Engineer with two copies of the chemical analysis of reinforcing bars, in accordance with the relevant ASTM specifications.

905.03. Bar Reinforcement for Structures. Deformed steel bars used for non-prestressed concrete reinforcement must meet the requirements of ASTM A615/A615M, ASTM A706/A706M, or ASTM A996/A996M (Type A or Type R) for Grade 60 steel bars, unless otherwise required.

Deformed steel bars for prestressed concrete reinforcement must meet the requirements of ASTM A615/A615M, ASTM A706/A706M, or ASTM A996/A996M (Type A) for Grade 60 steel bars, unless otherwise required.

A. **Bending.** Shop cold bend bar reinforcement to the shapes shown on the plans. Complete all field bending cold. Do not heat bars during bending.

The diameter of a bar bend, measured on the inside of the bar, must meet the requirements of Table 905-1.

Table 905-1
Minimum Bend Diameters

ASTM Bar Designation No.	Minimum Inside Diameter of Bend
No. 3 – No. 8	6 bar diameters
No. 9 – No. 11	8 bar diameters
No. 14, No. 18	10 bar diameters
Stirrups and Ties, No. 3 – No. 5	4 bar diameters

Cut and bend bars in accordance with the CRSI Manual of Standard Practice and the ACI Detailing Manual.

B. **Bundling and Tagging.** Ship bar reinforcement in standard bundles, tagged and marked in accordance with the CRSI Manual of Standard Practice.

C. **Epoxy Coating.** Epoxy coated steel reinforcement bars must be coated in accordance with ASTM A775/A7775M. Epoxy coated steel welded wire reinforcement must be coated in accordance with ASTM A884/A884M, Class A, Type 1. The following exceptions and additions apply:

1. Select coating material from the Qualified Products List.

2. The Department may test samples to verify thickness of coating, adhesion of coating, and holidays. Coat more steel reinforcement than shown on the plans to allow splicing to replace steel reinforcement removed for test samples.
3. Include written certification that the steel reinforcement was cleaned, coated, and tested in accordance with ASTM A775/A775M or ASTM A884/A884M, respectively, from the coating applicator.
4. Repair damage to the coating in accordance with subsection 706.03.E.8.

D. **Bar Chairs and Wire Ties for Epoxy Coated Steel Reinforcement.** Bar chairs and wire ties required for placing and fastening steel reinforcement must conform to the following:

1. Bar chairs must be plastic coated wire, epoxy coated wire, or plastic.
2. Wire ties must be plastic coated wire, epoxy coated wire, or molded plastic clips.
3. Tie-down wires must be plastic coated.

905.04. Bar Reinforcement for Pavements. Bar reinforcement for pavement tie bars and bars for use as dowels for load transfer in pavement expansion joints and contraction joints must meet the requirements of section 914.

905.05. Dowels and Bar Reinforcement for Curb, Glare Screen, Concrete Barriers, and Filler Walls. Deformed steel bars must meet the requirements of ASTM A615/A615M, ASTM A706/A706M or ASTM A996/A996M (Type A or Type R) for Grades 40, 50, or 60 as applicable.

905.06. Steel Welded Wire Reinforcement. Deformed welded steel wire reinforcement must meet the requirements of ASTM A1064/A1064M and be fabricated as required.

905.07. Strand for Prestressed Concrete. Strands for prestressed concrete must have a 0.500 inch nominal diameter and a 0.153 square inch cross sectional area or a 0.6000 inch nominal diameter and a 0.217 square inch cross sectional area and must meet the requirements of ASTM A416/A416M, for Grade 270, low relaxation strand, as required.

Identify each reel or pack number and provide a Test Data Certification, including a load elongation curve to at least 1 percent elongation.

Protect prestress strands from physical damage, rust, and contaminants.

905.08. Tendons for Lateral Post Tensioning of Box Beams. Tendons for lateral post tensioning of box beams must meet the requirements of ASTM A416/A416M, for Grade 270 steel strand or ASTM A722/A722M, for high strength steel bars.

If selecting bars, consider the tolerances allowed in manufacturing and placing precast concrete box beams and determine the required bar lengths accordingly.

Section 906. STRUCTURAL STEEL

906.01. General Requirements. Finished rolled shapes must be free from imperfections that affect strength and durability in accordance with ASTM A6/A6M. Rolled shapes must have a smooth and uniform finish. Straighten rolled shapes in the mill if necessary before shipment.

906.02. Testing. Test structural steel materials in accordance with the specified ASTM, AASHTO or Department methods, as modified by this section.

Mechanically test structural steel products in accordance with ASTM A6/A6M and AASHTO T 244.

906.03. Mill Inspection. Mill inspection is waived, unless otherwise specified. If required, the Department will conduct mill inspection in accordance with Division 1, subsection 707.02, and subsection 906.01. Notify the Department before beginning rolling to allow time for inspection. Provide Mill Test Reports in accordance with subsection 707.02.

906.04. Structural Steel.

Perform impact testing in accordance with AASHTO M270 and at the temperatures required for Zone 2.

Non-fracture critical main members must meet the tension component impact test requirements at Frequency (H) in accordance with AASHTO T243, regardless of the direction of stress in the member. Main members identified in the contract by the Engineer as fracture critical must meet the fracture critical tension component impact test requirements at Frequency (P) in accordance with AASHTO T243.

The Department considers the average flange thickness to be the governing thickness for wide-flange beams, wide-flange tees, and channel shapes. The Department considers the required leg thickness to be the governing thickness for angles. Take test specimens for these shapes at one-third the distance from the outer edge of the flange or leg to the web or heel.

Fill plates, less than ⅜ inch thick, may be fabricated from steel conforming to ASTM A1011/A1011M or ASTM A606/A606M.

906.05. Foundation Piles. The piling manufacturer must provide a certified mill test report showing the physical properties of the steel.

Foundation piles must meet the following requirements for the type of pile required. If the Engineer determines pile cutoffs are in good condition, pile cutoffs that meet size and thickness requirements will be accepted without mill test reports. If submitting pile cutoffs without mill test reports, provide the Engineer with two copies of an affidavit stating that the material provided meets the contract requirements.

A. **Steel H-Piling and Special Sections.** Steel H-piling and special sections must meet the requirements of AASHTO M270 Grades 50 or 50W, or ASTM A690/A690M.

B. **Steel Shells for Cast-in-Place Concrete Piles.** Steel shells for cast-in-place concrete piles must have the nominal outside diameters and meet or exceed minimum shell metal thickness shown on the plans. Steel shells must meet the requirements of ASTM A252/A252M Grade 3 welded and seamless steel pipe piles. Spiral Weld steel shells are allowed.

If shell thicknesses greater than the minimum stated on the plans are provided to increase strength and rigidity during driving due to equipment selected, or distortion caused by soil pressures from driving adjacent piles when the driving sequence shown on the plans is not followed, the extra costs will be considered included in the pay item.

If shell thicknesses greater than the minimum stated on the plans are necessary to obtain proper pile penetration in unforeseen soil properties, or distortion caused by soil pressures from driving adjacent piles when the driving sequence as noted on the plans is followed, the extra costs will be paid for as extra work.

Use watertight pipe shells to exclude water during the placement of concrete.

Do not use fluted shells.

C. **Pile Points.** Pile points must conform to the dimensions shown on the plans. Provide certification that the steel used for the fabrication of the points meets one of the following:

1. AASHTO M270 Grade 36, Grade 50, or Grade 50W;
2. SAE Grade 1016 through Grade 1027; or
3. SAE Grade 1030.

D. **Pile Protection.** Provide asphalt or ultraviolet stabilized extruded corrugated polypropylene sheets for pile protection. The asphalt must conform to ASTM D449/A449M, Type II. The polypropylene sheets must conform to Table 906-1. The polypropylene sheets must be preformed and scored to fold around and conform to the shape of the piling. The length of each sheet must be at least 4 feet.

Table 906-1
Polypropylene Sheet Specifications

Property	Specification	Test Method
Specific Gravity	0.906	ASTM D1505
Melt Flow	0.5 g/10 min	ASTM D1238
Tensile at Yield	4,000 psi	ASTM D638
Flexural Modulus	195,000 psi	ASTM D790
Elongation at Break	>500%	ASTM D638
HDT at 66 psi	190 ºF	ASTM D648

Notched Izod at 73 °F	No break	ASTM D256
Rockwell Hardness	75 R Scale	ASTM D785

906.06. Steel Sheet Piles. For permanent steel sheet piling, the steel piling manufacturer must provide the Department with a certified mill test report that shows the physical properties of the steel.

Sheet piles must meet the following requirements for the type of pile required. If the Engineer determines pile cutoffs are in good condition, pile cutoffs that meet the size and thickness requirements will be accepted without mill test reports. If submitting pile cutoffs without mill test reports, provide the Engineer with two copies of an affidavit stating that the material provided meets the contract requirements.

A. **Temporary Steel Sheet Piling.** Temporary steel sheet piling must meet the requirements of AASHTO M202 or AASHTO M270 Grade 36, Grade 50, or Grade 50W.

B. **Permanent Steel Sheet Piling.** Permanent steel sheet piling must meet the requirements of AASHTO M270 Grade 50.

906.07. High-Strength Steel Bolts, Nuts, and Washers for Structural Joints. Structural bolts must meet the requirements of ASTM F3125/F3125M, Grade A325, Type 1. Nuts must meet the requirements of ASTM A563, Grade DH or AASHTO M292, Grade 2H. Washers must meet the requirements of ASTM F436/F436M for circular, beveled, clipped circular, and clipped beveled washers.

Bolts, nuts, and washers must be hot dip galvanized in accordance with AASHTO M232. Galvanized nuts must be tapped oversize in accordance with ASTM A563 and meet Supplementary Requirements S1 and S2.

906.08. Pins and Link Plates for Steel Bridge Construction. Link plates for steel bridge construction must meet the requirements of AASHTO M270 Grade 50 or Grade 50W, and pins must meet the requirements of ASTM A276/A276M UNS designation S21800 or S20161 annealed stainless steel with 50 ksi yield point. Provide washers made from austenitic stainless steel meeting the chemical requirements of ASTM A276/A276M UNS designation S31600, S31603, S21800 or S20161.

The Longitudinal Charpy V-Notch impact values for pin and link plate materials in redundant structures must meet the requirements for high strength structural steel in subsection 906.04 and require impact testing at Frequency (P). Use the steel yield point stress value shown in the certified mill test report to determine the testing temperature. The steel may require heat treatment to meet the Charpy V-Notch impact requirements.

The longitudinal Charpy V-Notch impact values for pin and link plate materials in non-redundant structures must average 30 foot-pounds when tested at the lowest anticipated service

temperature (LAST) specified for the MDOT region location of the structure in accordance with Table 906-2.

Table 906-2 Lowest Anticipated Service Temperatures by MDOT Region	
Region	**LAST**
Superior	−25 °F
North	−20 °F
Grand and Bay	−15 °F
Southwest, University, and Metro	−10 °F

906.09. Shear Developers. Select steel shear connectors from the Qualified Products List. Steel shear connectors must be designed for end welding to steel beams and girders with automatically timed stud welding equipment. Provide steel shear connectors as shown on the plans.

Provide an arc shield (ferrule) with each stud. The arc shield must be made of a heat resistant ceramic or material that will not adversely affect the welds, cause excessive slag, or crumble or break from thermal or structural shock during welding.

Furnish flux for welding with each connector, either attached to the end of the connector or combined with the arc shield for automatic application in the welding operation.

Steel shear connectors must meet the requirements of AASHTO M169, for cold finished carbon steel, cold drawn bar, Grade 1015 or Grade 1020, either semi-killed or fully-killed. If using flux-retaining caps, provide cold-rolled steel caps of a low carbon grade for welding, that meet the requirements of ASTM A109/A109M.

Tensile properties, as determined by tests of bar stock after drawing or of finished connectors, must conform to the minimum requirements shown in Table 906-3.

Table 906-3 Steel Shear Connector Tensile Properties	
Property	**Specification (minimum)**
Tensile strength	60 ksi
Yield strength	50 ksi
Elongation	20% in 2 inches
Reduction of area	50%

Determine tensile properties in accordance with AASHTO T244 for mechanical testing of steel products. Use the 0.2 percent offset method to determine the yield strength.

Finished connectors must be uniform in quality and condition, free from injurious laps, fins, seams, cracks, twists, bends, or other defects. Use cold drawing, cold rolling, or machining to finish.

Section 907. FENCING MATERIALS

907.01. General Requirements. Materials for fencing property, right of way, and other installations, must meet the requirements of this section.

907.02. Testing. Fencing materials testing will be in accordance with the specified ASTM, AASHTO or Department methods, as modified by this section.

The weights of fencing material include the weight of coating, unless otherwise specified.

Zinc coating at 1 ounce per square foot corresponds to a coating thickness of 1.7 mils.

907.03. Woven Wire Fence.

A. **Fabric.** Steel woven wire fabric must be zinc coated or aluminum coated.

1. **Zinc Coated.** Zinc coated fabric must meet the requirements of ASTM A116, Design No. 1047-6-11, for Grade 60, Class 1 zinc coating.

2. **Aluminum Coated.** Aluminum coated fabric must meet the requirements of ASTM A116, Design No. 1047-6-11.

B. Barbed Wire. Standard grade zinc coated or aluminum coated steel barbed wire must be composed of two strands of wire with four point round barbs. Provide chain link fence grade barbed wire for use with chain link fence.

1. **Zinc Coated.** Zinc coated barbed wire must meet the requirements of ASTM A121 and the following:

    a. If the direction of the strand wire twist alternates between left and right, the strand wires must not untwist under a tensile force of 950 pounds for 12½ gauge wire, 850 pounds for 13½ gauge wire, or 750 pounds for 15½ gauge wire; and
    b. Class 1 zinc coating is required for 12½ gauge steel wire, and Class 3 zinc coating is required for 13½ gauge wire and 15½ gauge wire.

2. **Aluminum Coated.** Aluminum coated barbed wire must meet the requirements of ASTM A121, for Type I aluminum coated steel barbed wire with aluminum coated barbs.

C. **Smooth Line Wire.** Smooth line wire must be No. 9 gauge coated steel wire meeting the requirements of ASTM A116, for Grade 60, Class 1 zinc-coated smooth line wire or ASTM A116, for aluminum coated smooth line wire.

D. **Steel Posts.** After fabrication, galvanize steel fence posts, braces, and fittings in accordance with ASTM A123/A123M and this subsection.

The weight of zinc coating per square foot of surface on posts and braces must average at least 2.00 ounces and no individual specimen may have less than 1.80 ounces of zinc coating per square foot, regardless of metal thickness. The Department will include the weight of zinc coating in the weights specified for posts and braces, but will deduct the weight of galvanizing greater than 4.00 ounces per square foot of surface from the post weight.

The Department will allow an alternate zinc and clear coat system for pipe sections. The exterior surface of the pipe section must have 0.90 ounce per square foot of zinc coating and a clear acrylic coating at least 0.30 mil thick. The interior surface of the pipe section must have 0.35 ounce per square foot of zinc coating or 0.30 mil zinc rich organic coating and a zinc powder loading of at least 91 percent by weight.

Zinc coating must be applied in accordance with ASTM A123/A123M. Determine coating weights and thicknesses in accordance with AASHTO M181.

1. **Line Posts.** Steel for line posts must meet the requirements of ASTM A702, for Type A or Type B. Line posts must be 7 feet long, ±1 inch, with a nominal weight of 1.12 pounds per foot. Exclusive of the anchor plate, individual line posts must weigh 1.08 pounds per foot. Posts must be notched, studded, or have other Department-approved means of holding the fabric in place on the post. Provide each post with a Department-approved anchor plate and at least seven 11 gauge galvanized or aluminum coated wire clamps.

2. **End, Corner, Gate, Intersection, and Intermediate Braced Posts.** Steel angle sections, steel pipe, or steel tubing end, corner, gate, intersection, and intermediate braced posts must have an average weight within 10 percent of the specified weight per foot. Angle sections for posts and braces must meet the physical requirements of ASTM A36/A36M or ASTM A702, for Type A or Type B.

   Provide the required fittings and braces with each post.

   a. **Posts.** End, corner, gate, intersection, and intermediate braced posts must be 8 feet long, ±1 inch.

      Angle sections must be nominal 2½ inch by 2½ inch by ¼ inch. Pipe or tubing must be nominal 2-inch, (2.375 inch OD), weighing 3.650 pounds per foot.

   b. **Braces.** Angle section braces must be nominal 1¾ inch by 1¾ inch by ¼ inch or nominal 2 inch by 2 inch by $^{3}/_{16}$ inch. Steel pipe braces must be nominal 1½ inch, (1.900 inch OD), weighing 2.72 pounds per foot. Steel tubing braces must be nominal 1.750 inch OD weighing 3.13 pounds per foot.

      Braces must be long enough to support the posts.

E. **Wood Posts.** Wood posts must meet the requirements of subsection 912.07.

F. **Gates.** Provide gates for woven wire fence of the width and height shown on the plans. Provide each gate with Department-approved hinges, latches and auxiliary braces to prevent sagging. Weld or fit to form a rigid and watertight frame. Use woven wire in accordance with subsection 907.03.A to fill gate frames.

907.04. Steel Chain Link Fence.

A. **Fabric.** Chain link fence fabric must be zinc coated steel fabric meeting the requirements of ASTM A392, for Class 2 coating, aluminum coated steel fabric meeting the requirements of ASTM A491, or polymer coated steel fabric meeting the requirements of ASTM F668, as modified by this subsection.

Galvanize zinc coated fabric after weaving.

Polymer coated steel chain link fence fabric must meet ASTM F668, Class 2a except that the steel core wire may be either hot-dipped zinc coated (galvanized) or aluminum coated (aluminized) prior to polymer coating. Both the metallic coating and the polymer coating must be applied before weaving. The minimum weight of metallic coating must conform to ASTM F668, Class 2a for zinc galvanized, or ASTM A817 for aluminum. Provide fabric height and polymer coating color as shown on the plans.

Provide steel chain link fence fabric with the following characteristics:

1. Mesh size of 2.0 inches, or as shown on the plans;

2. Wire size of 9 gauge zinc coated, 9 gauge aluminum coated, or 10 gauge aluminum coated; and

3. Top and bottom selvages knuckled.

B. **Tension Wire.** Tension wire must meet the steel wire requirements of ASTM A824 for Type I aluminum coating and Type II, Class 3, zinc coating.

As an alternative for tension wire coatings, the Contractor may use hot dipped Type I aluminized or hot dipped Type II, Class 1 galvanized, followed by a polymer coating. The polymer coating must meet the requirements for polymer coated steel chain link fence fabric and match the color of the polymer coated steel chain link fence fabric.

C. **Posts for Fence and Gates.** Fence posts and gate posts for chain link fence must be metallic coated steel meeting the requirements of Table 907-1 and Table 907-2.

Table 907-1 Posts and Rail for Steel Chain Link Fence				
Use	**Fabric Height (in)**	**Diameter (a) (in)**	**Nominal Weight (lb/ft)**	**ASTM Steel Specification (b)**
End, Corner, Angle, and Intermediate Braced Posts (c)	≤120	2½ (2.875)	5.80	F1083
		2½ (2.875)	4.64	F1043
		3½ by 3½ RF Corner (d)	5.10	F1043
Line Posts	≤120	2 (2.375)	3.65	F1083
		2 (2.375)	3.12	F1043
		1⅞ by 1⅝ H-Section	2.72	F1043
		2¼ by 1 45/64 H-Section	3.26	F1043
		2¼ by 1⅝ C-Section (c)	2.70	F1043
	≤72	2 (2.375)	2.31	F1043
		1⅞ by 1⅝ C-Section (c)	2.26	F1043
	≤60	1½ (1.900)	2.72	F1083
			2.28	F1043
Horizontal Rail	—	1¼ (1.660)	2.27	F1083
		1¼ (1.660)	1.84	F1043

a. Outside pipe diameter with nominal diameter given first; actual diameter in brackets.
b. ASTM F1083 references are for standard weight (Schedule 40) pipe.
c. Posts for fencing on structures must be 2½ in (2.875) nominal outside pipe diameter and must meet the requirements of either ASTM F1083 (Schedule 40) or ASTM F1043 (Group 1C) or as called for on the plans.
d. RF: Roll-Formed Sections.

Table 907-2 Pipe for Gate Posts and Frames				
Use	**Gate Width (ft)**	**Diameter (a) (in)**	**Nominal Weight (lb/ft)**	**ASTM Steel Specification (b)**
Gate Posts	≤6	2½ (2.875)	5.80	F1083
		2½ (2.875)	4.64	F1043
	7 – 13	3½ (4.000)	9.11	F1083
		3½ (4.000)	7.65	F1043
	14 – 18	6 (6.625)	18.97	F1083
Gate Frames	≤6	1¼ (1.660)	2.27	F1083
		1¼ (1.660)	1.40	F1043
	7 – 18	1½ (1.900)	2.72	F1083
		1½ (1.900)	2.28	F1043

a. Outside pipe diameter with nominal diameter given first; actual diameter in parenthesis.
b. ASTM F1083 references are for standard weight (Schedule 40) pipe.

The average weight per foot of metallic coated fence posts must be within 10 percent of the required weight per foot. Posts must be at least 32 inches longer than the height of the fence fabric.

Steel posts for chain link fence must be coated with zinc or aluminum inside and outside, or polymer coated posts in accordance with one of the following methods.

1. **Zinc Coating.** Apply zinc coating meeting the requirements of ASTM A123/A123M or ASTM A653/A653M. Use the alternate zinc and clear coat system described in subsection 907.03.D for pipe sections only.

   The weight of zinc coating on pipe sections must average at least 1.80 ounces per square foot of surface and at least 1.60 ounces per square foot of surface per specimen when tested in accordance with ASTM A90/A90M.

   For posts, other than pipe sections, the weight of zinc coating on each post must average at least 2.00 ounces per square foot of surface and at least 1.80 ounces per square foot of surface per specimen when tested in accordance with ASTM A90/A90M.

2. **Aluminum Coating.** Use Type 2 aluminum to coat posts. The weight of aluminum coating on each post must average at least 0.75 ounces per square foot of surface and at least 0.70 ounces per square foot of surface per specimen when tested in accordance with ASTM A428/A428M.

3. **Polymer Coating.** After metallic coating, coat exterior surfaces with extruded and adhered polymer coating. Match the color of the post to the color of the polymer coated steel chain link fence fabric coating.

D. **Gates.** Provide gates for chain link fence as shown on the plans. Provide metallic coated steel pipe gate frames in accordance with Table 907-2. The average weight per foot of the pipe for the gate frames must be within 10 percent of the required weight per foot. Use the same type and weight of coating required for posts.

Weld or fasten joints to form a rigid and watertight frame. Wire brush welded joints and paint with two coats of a Department-approved zinc rich paint.

Provide gates with intermediate braces, and truss rods to prevent sagging, and provide Department-approved hinges, latches, keepers, and stops. Fill the gate frames with fabric meeting the same requirements as for the fence fabric.

Provide polymer coated gate frames the same as for metallic-coated gate frames, in accordance with Table 907-2. Apply polymer coating to gate frames, including hinges, latches, keepers, and stops. Match the color of the polymer coated gate frame to the color of polymer coated steel chain link fence fabric.

E. **Fence Fittings and Hardware.** Provide post caps, rail, or brace ends, tie wires and clips, tension and brace bands, tension bars, truss rods, barb arms, and other hardware, meeting the requirements of ASTM F626 and the exceptions and additions specified in this subsection.

Bevel the ends of hog rings for fastening fabric to the tension wire to allow crimping.

Provide fittings made of malleable iron or pressed steel for fences and gates.

If using aluminum coated wire ties and clips, ensure the coating weighs at least 0.30 ounces per square foot of surface.

The Contractor may use flat aluminum alloy line post bands with an OD from 0.062 inch to 0.375 inch and with self locking ends to fasten fabric to posts with an OD no greater than 2.375 inches.

Use double twisted, No. 9 gauge, galvanized steel for fabric fasteners for structure fencing.

Polymer coated fence fittings and hardware must be as specified above. After metallic coating, coat exterior surfaces with extruded and adhered polymer coating. Ensure the color of the polymer coating matches the color of the polymer coated steel chain link fence fabric.

907.05. High-Tensile Wire Fence.

A. **Wire.** High tensile wire must be 1½ gauge, Grade 200, with Class 3 zinc coating in accordance with ASTM A854/A854M.

B. **Wood Posts.** Wood posts must be pressure treated and meet the requirements of subsection 912.07.

C. **Hardware.** Galvanize hardware in accordance with ASTM A153/A153M.

907.06. Protective Fencing. Protective fencing must be orange-colored, high density polyethylene mesh fabric with a nominal 2 inch diamond design. Protective fencing must be 48 inches high and weigh at least 0.102 pounds per square foot.

Section 908. MISCELLANEOUS METAL PRODUCTS

908.01. General Requirements. Miscellaneous metal products must meet the requirements of this section and the contract.

908.02. Testing. Miscellaneous metals product testing will be in accordance with the specified ASTM, AASHTO or Department methods, as modified by this section.

908.03. Malleable Iron Castings. Malleable iron castings must meet the requirements of ASTM A47/A47M, for Grade 22010.

908.04. Steel Castings. Steel castings for steel construction must meet the requirements of ASTM A148/A148M for Grade 90-60 carbon steel castings, as shown on the plans, unless otherwise approved by the Engineer. Steel castings must be heat treated by full annealing, unless otherwise required.

Blow holes on finished castings must be located so that a straight line laid in any direction will not cut a total length of cavity greater than 1 inch in any 12 inches. Single blow holes must not exceed 0.500 square inches in area or have a depth that will affect the strength of the casting.

908.05. Iron Castings. Gray iron castings must meet the requirements of AASHTO M306, Class 35B for manholes, catch basins, leaching basins, inlets, iron steps, and bridge deck drains. Ductile iron castings meeting the requirements of AASHTO M306, Grade 70-50-05 or Grade 80-55-06 is an acceptable alternative to gray iron when shown on the plans. Castings must be certified by independent proof load testing at 50,000 pounds. Coat exposed casting surfaces with asphaltic paint. The coating must be smooth, tough, and tenacious when cold and must not scale-off, tack, or become brittle.

908.06. Bronze or Copper-Alloys for Structures. Washers, bearing, and expansion plates for bridges must meet the requirements of ASTM B22/B22M, for Copper Alloy UNS No. C91100 bronze castings, or the requirements of ASTM B100, for Copper Alloy UNS No. C51000 copper alloy plates and sheets. Provide bronze castings, free of deleterious material, casting faults, injurious blow holes, and other defects.

Finished parts must be within 5 percent of the required thickness and within 0.125 inch of the required width and length shown on the plans. Mating curved surfaces must have a curvature radius no greater than +0.010 inch on concave surfaces, and no less than −0.010 inch on convex surfaces shown on the plans. Flat machined surfaces must meet the required dimensions within 0.0005 inch per 1.0 inch.

The surface roughness of bronze or steel must not be greater than 125 micro inches per inch root mean square (RMS).

908.07. Sheet Lead. Sheet lead must meet the requirements of ASTM B29 for desilverized pig lead.

908.08. Sheet Copper. Sheet copper must meet the requirements of ASTM B370.

908.09. Tubing, Steel Railings.

A. **Base Plates, Angles, and Post Elements.** Base plate, angle, rail splice, and non-tubular post elements must meet the material requirements of ASTM A36/A36M and galvanizing requirements of ASTM A123/A123M. Tubular post elements must meet the material requirements of ASTM A500/A500M, Grade B and galvanizing requirements of ASTM A123/A123M. Silicon content must be less than 0.06 percent or from 0.15 percent to 0.25 percent. Base plate and post elements must meet the Charpy V-Notch impact requirements specified in subsection 906.04.A at a test temperature of 10 degrees Fahrenheit.

B. **Rail Elements.** Rail elements must meet the material requirements of ASTM A500/A500M, Grade B and galvanizing requirements of ASTM A123/A123M. Silicon content must be less than 0.06 percent or from 0.15 percent to 0.25 percent.

Provide the Engineer with one copy of the Mill Test Report (MTR) verifying chemical and physical requirements for structural steel rail elements. Provide an affidavit stating that the material meets specifications. If the MTR is unavailable, arrange for tests of chemical and physical properties and provide certified copies of the test reports and affidavits to the Engineer at no additional cost to the Department. The Contractor has the option of re-testing a rail sample if it failed elongation and passed all other chemical and physical requirements.

The Contractor must drop weight tear test rail elements from all heats supplied in accordance with ASTM E436 (Standard Test Method for Drop-Weight Tear Tests of Ferric Steels), except as modified herein. Drop weight tear testing is not required on HSS 2 by 2 rail elements. Do not heat treat failed heats and do not provide failed heats to the fabricator. The Contractor must conduct the drop weight tear test on each heat at 0 degrees Fahrenheit on 2 inch by 9 inch specimens, supported to achieve a 7 inch span.

The Contractor must test three specimens from each of three sides that do not contain a weld to determine the percent shear area. The Contractor must disregard the shear areas of the three specimens from the side with the lowest average shear area and base the final average on the remaining six specimens. Material with an average percent shear area below 50 is not allowed; however, if the average percent shear area is between 30 and 50, the Department will allow the Contractor to retest the material. The retest sampling frequency is three times that of the first test and all sample test results must be included in calculating the average. Retested material must have a minimum average percent shear area of 50.

The manufacturer of the tubular railing must identify the product as follows:

1. Place identification before galvanizing;

2. Include heat number or other code traceable to the heat number;
3. Include manufacturer's unique identification code;
4. Place identification on only one section face;
5. Repeat identification at no more than 4-foot intervals;
6. Do not extend identification into the curved surfaces at corners of section; and
7. Do not place identification on side facing traffic or side opposite traffic.

C. **Hardware.** Railing anchor studs must meet the requirements of ASTM A449, Type 1. Structural bolts must meet the requirements of ASTM F3125/F3125M, Grade A325, Type 1. Round head structural bolts must meet the requirements of ASTM A449, Type 1. The material for the railing hand hole screws must meet the requirements of ASTM A276/A276M, Type 304. Nuts must meet the requirements of ASTM A563, Grade DH or AASHTO M292, Grade 2H. Flat circular washers must meet the requirements of ASTM F436/F436M. Lock washers must be steel, regular, helical spring washers meeting the requirements of ASME B18.21.1.

Bolts, anchor studs, nuts, and, washers must be hot-dip galvanized in accordance with AASHTO M232. Galvanized nuts must be tapped oversize in accordance with ASTM A563 and meet supplementary requirements S1 and S2.

908.10. Hardware for Timber Construction. Machine bolts, drift bolts, and dowels for timber construction must be made of structural grade steel.

Washers must be cast iron ogee or malleable castings. Nails must be cut or round wire of standard form. Spikes must be cut or wire spikes, or boat spikes. Galvanize in accordance with AASHTO M232, when required.

908.11. Steel Beam Guardrail Elements, Hardware, and Steel Sleeves.

A. **Steel Beam Elements and End Sections.** Unless otherwise specified on the plans and details, provide steel beam elements and terminal end shoes meeting the requirements of AASHTO M180, for Class A guardrail. Thrie beam elements for bridge rail retrofit, special end shoes, and thrie beam terminal connectors must meet the requirements of AASHTO M180, for Class B guardrail.

Provide steel beam elements and end sections in the required shape. Steel beam elements and end sections must be hot-dip galvanized after fabrication in accordance with AASHTO M180, for Type II zinc coatings. W-beam elements may be hot-dip galvanized before, or after fabrication.

B. **Hardware.** Bolts, nuts, washers, and other guardrail hardware must be hot-dip galvanized in accordance with AASHTO M232.

Bolts must meet the requirements of ASTM A307, Grade A. Nuts must meet the requirements of ASTM A563, Grade A with supplementary requirement S1. Flat circular washers must meet the requirements of ASTM F436/F436M.

Beveled square or rectangular washers must meet the requirements of ASTM F436/F436M and the dimensions shown on the plans.

Bolts and nuts for making splices and connections of beam elements, other than at bridge barrier railings, must meet the configuration requirements of AASHTO M180. The bolts must be of the Alternate No. 2 configuration.

Structural bolts for connections at bridge railings must conform to ASTM F3125/F3125M, Grade A325, Type 1. Nuts must meet the requirements of ASTM A563, Grade DH or ASTM A194/A194M, Grade 2H. Flat circular washers must meet the requirements of ASTM F436/F436M.

Wire rope and fittings for the cable anchorage must conform to AASHTO M30. Wire rope must be Type II with a Class B coating.

C. **Steel Sleeves, Soil Plates, and Bearing Plates.** Provide steel sleeves with the inside dimensions shown on the plans within a tolerance, after galvanizing, of +⅛ inch. Provide steel plates in the sizes shown on the plans, but no more than 0.250 inch larger.

Steel for the sleeves and plates for wood guardrail posts must meet the requirements of ASTM A36/A36M or ASTM A1011/A1011M, for Grade 36 or Grade 40.

Steel sleeves must have one or two complete penetration longitudinal welds that run along the length of the sleeve.

Hot-dip galvanize sleeves and plates in accordance with AASHTO M111. The weight of the zinc coating on the sleeves must average at least 2.0 ounces per square foot and each sleeve must have at least 1.7 ounces of zinc coating per square foot. The weight of the zinc coating on plates must average at least 2.3 ounces per square foot and each plate must have at least 2.0 ounces of zinc coating per square foot.

908.12. Steel Posts for Guardrail. Steel posts for guardrail must be W6 x 9 or W6 x 8.5 section steel posts of the length shown on the plans for guardrail. Each steel post must weigh at least 9.0 pounds per foot. Posts must be fabricated from ASTM A36/A36M structural steel.

Hot-dip galvanize posts in accordance with AASHTO M111 to produce an average coating weight of at least 2.0 ounces per square foot of surface area.

908.13. Guardrail Reflectors. Fabricate guardrail reflectors from at least 13 gauge steel sheets, galvanized in accordance with ASTM A653/A653M, coating designation G210, and as required. Use Type XI reflective sheeting meeting the requirements of subsection 919.03.B.

Prepare galvanized surfaces in accordance with the sheeting manufacturer's recommendations before applying the sheeting. Bond reflective material to the galvanized steel.

908.14. Anchor Bolts, Nuts, and Washers.

A. **General.** The fabricator or supplier must provide a Mill Test Report (MTR) that shows compliance with ASTM F1554 for the grade specified in the contract in addition to the following:

1. Heat number;
2. Yield strength;
3. Tensile strength;
4. Elongation;
5. Reduction of area; and
6. Charpy V-notch.

Provide the furnace lot number for all heat-treated anchor bolts. Order additional bolts to replace those used for Department testing. Each anchor bolt must be provided with two washers and two nuts, unless otherwise required in the contract.

Provide bolts, nuts, and washers in the size and shape shown on the plans and hot-dip galvanized in accordance with AASHTO M232. Galvanize the exposed threaded end of anchor bolts a minimum of 20 inches.

Nuts must meet the requirements of ASTM A563, Grade DH or ASTM A194/A194M, Grade 2H. Lubricate nuts in accordance with ASTM A563, supplementary requirement S1 and S2. Re-tap nuts after galvanizing in accordance with ASTM A563. Provide flat circular washers meeting the requirements of ASTM F436/F436M.

B. **Anchor Bolts and Nuts for Cantilever and Truss Sign Supports, Light Standards, Dynamic Message Sign, CCTV Poles, Tower Lighting Units, and Traffic Signals Mast Signal Arm Poles.** Steel anchor bolts must meet the requirements of subsection 908.14.A, except anchor bolt material must meet ASTM F1554, Grade 55, supplemental requirements S1, S3, and S4.

Table 908-1
Anchor Bolt Specifications

Characteristic	Specification
Yield Strength	55 ksi
Ultimate Strength	75 – 95 ksi
Elongation (2 in gauge)	≥21% (a)
Reduction in Area	≥30% (b)
Longitudinal Charpy V-Notch	≥15 ft-lb at 40 °F

a. Elongation (8 in gauge), min 18% for bolts tested full section.
b. Bolts over 2 in to 2.5 in, 22% minimum; over 2.5 in to 3 in, 20% minimum.

The Department will perform Charpy V-Notch toughness tests on specimens in accordance with Frequency (P) testing of AASHTO T243 orienting the notch perpendicular to the longitudinal axis of the anchor bolt. If necessary, heat treat steel to meet Charpy V-Notch toughness requirements.

Bolt threads must meet the requirements of ASME B1.1, for 8UN series, Class 2A tolerances before coating. After coating, the maximum limit of pitch and major diameter for bolts with a diameter no greater than 1 inch may exceed the Class 2A limit by no more than 0.021 inch, and by no greater than 0.031 inch for bolts greater than 1 inch in diameter.

Nut threads must meet the requirements of ASME B1.1, 8UN Series, Class 2B tolerances. Tap nuts for anchor bolts less than 1 inch in diameter no greater than 0.021 inch and nuts for anchor bolts equal to or greater than 1 inch in diameter no greater than 0.031 inch.

C. **Anchor Bolts for Traffic Signal Strain Poles.** Provide anchor bolts that meet subsection 908.14.A with the following exceptions and additions:

1. ASTM F1554, Grade 105, supplementary requirement S3;
2. Coarse pitch threads are acceptable if the anchor bolts meet required tolerances;
3. Bolts must be threaded at least 9 inches at the upper end; and
4. Each anchor bolt must be provided with one steel lock washer meeting the requirements of ASME B18.21.1.

D. **Anchor Bolts for Other Purposes.** Steel anchor bolts must meet subsection 908.14.A, except anchor bolt material must meet ASTM F1554, Grade 36, supplementary requirements.

Section 909. DRAINAGE PRODUCTS

909.01. General Requirements. Use the pipe materials shown in Table 401-1 and Table 402-1 for culverts or sewers, if only the size and class are specified by the contract documents. Construct drainage structures and underdrains as required.

Provide galvanized corrugated steel or aluminum structural plates as required. Galvanized corrugated steel structural plates must meet the requirements of AASHTO M167M/M167. Corrugated aluminum structural plates must meet the requirements of ASTM B790/B790M or Section 12 of the AASHTO LRFD Bridge Specifications.

Provide sanitary sewer or industrial waste systems in accordance with the contract. Install sanitary sewer or industrial waste systems using a compression gasket as specified in subsection 909.03.

909.02. Testing. Test drainage products in accordance with AASHTO or ASTM specifications, unless otherwise specified in this section.

Verify each concrete pipe manufacturer provides a calibrated standard testing machine to determine the strength of the product. The manufacturer must provide labor and materials to perform strength tests.

909.03. Watertight Joints for Sewers and Culverts. Provide watertight joint systems selected from the Qualified Products List. Ensure watertight joint systems meet the pressure test requirements of MTM 723 and the specifications for the materials used in assembling the pipe system.

Use flexible rubber compression gaskets meeting the requirements of ASTM C443 for concrete pipe, ASTM F477 for plastic pipe, AASHTO M36 for corrugated metal pipe and AASHTO M196 for corrugated aluminum pipe. As an alternative to the AASHTO M36 requirements for metal pipe, the Contractor may use gasket material meeting the low temperature flexibility and elevated temperature flow test requirements of ASTM C990, excluding the requirements for softening point, flashpoint and fire point.

External rubber gaskets, mastic, and protective film must meet the requirements of ASTM C877 or C990.

909.04. Concrete Pipe Products.

A. **Reinforced Concrete Circular Pipe.** Provide reinforced concrete circular pipe meeting the requirements of AASHTO M170 or AASHTO M242. If using AASHTO M242 pipe, the design loads must meet the requirements of AASHTO M170.

If using AASHTO M170 pipe, apply the following exceptions and additions:

1. The Contractor may use the circular pipe designs specified in Table 909-1, Table 909-2, Table 909-3, and Table 909-4 in addition to the circular pipe designs in Table 2, Table 3, Table 4, and Table 5 of AASHTO M170.
2. Cast or drill lift holes and seal with concrete plugs after installing the pipe. Cast lift holes in circular pipe with elliptical reinforcing along the top centerline of the pipe.
3. Use circular reinforcement in circular pipe for use in pipe culverts and sewers jacked in place. The Engineer will waive the absorption test requirements of the concrete if the load required to produce the 0.01 inch crack exceeds the minimum load by at least 20 percent.

If using stirrup supports, use indentations or waterproof paint to mark the top and bottom centerline of the pipe, inside and out, on each end of the pipe. Symmetrically place stirrup supports around the centerline in the top and bottom portion of the pipe. Pass stirrups around, and in contact with each inside circumferential reinforcing member. Space the stirrups in accordance with Table 909-2, Table 909-3, and Table 909-4. Do not use more than three sections of stirrup material in one support line. Ensure a section length of at least 30 inches for each stirrup.

B. **Reinforced Concrete Elliptical Pipe.** Provide reinforced concrete elliptical pipe meeting the requirements of AASHTO M207. The Engineer will waive the concrete absorption test requirement if the load required to produce the 0.01 inch crack exceeds the required minimum load by at least 20 percent.

The Contractor may use the horizontal elliptical pipe designs specified in Table 909-5 and Table 1 of AASHTO M207.

C. **Non-Reinforced Concrete Pipe.** Provide non reinforced concrete pipe meeting the requirements of AASHTO M86. Place required markings on the barrel of the pipe near the socket. Ensure the markings remain legible during delivery of the pipe to the project.

D. **Precast Concrete Box Sections.** Use precast concrete box sections as required and in accordance with ASTM C1577.

E. **Concrete End Sections.** Provide precast concrete end sections fabricated using material meeting the requirements of AASHTO M170, for Class II, and as shown on the plans. Provide wet-cast concrete for end sections with an entrained air content of 6.0 percent to 8.5 percent. When using the dry cast process, use at least 658 pounds of cement per cubic yard of concrete and use a liquid air entraining agent at the dosage recommended by the manufacturer for dry cast concrete.

Use tongue and groove joints to make connections to pipe culverts.

F. **Pipe Culverts Jacked in Place.** For pipe culverts jacked in place, use reinforced concrete pipe at least 36 inches in diameter, meeting the requirements of AASHTO M170, for Class V, Wall B or C with full circular reinforcing.

G. **Precast Concrete Three-Sided and Arch Sections.** Use precast concrete three-sided and arch sections as required and in accordance with ASTM C1504.

909.05. Metal Pipe Products. For metal pipe products, refer to Table 909-6 for the minimum wall thickness, or refer to Table 909-7 through Table 909-17, and Table 909-20 to determine the required wall thickness.

Refer to Table 909-19 for gauge equivalents for specified nominal thicknesses.

A. **Corrugated Steel Pipe.** Provide circular and pipe arch corrugated steel pipe meeting the requirements of AASHTO M36 for metallic coated pipe. For polymer-precoated pipe, provide circular and pipe arch corrugated steel pipe meeting the requirements of AASHTO M245 and using an ethylene acrylic acid film selected from the Qualified Products List.

The Contractor may use Type IA and Type IIA dual wall polymer-precoated galvanized corrugated steel pipe of the wall thicknesses specified in Table 909-20 and specified in subsection 909.05.

1. **Steel Sheet.** Provide corrugated steel pipe from zinc coated sheets meeting the requirements of AASHTO M218 or from aluminum coated sheets meeting the requirements of AASHTO M274.

   On zinc coated steel sheet for polymer precoated corrugated steel pipe, use ethylene acrylic acid film selected from the Qualified Products List meeting the requirements of AASHTO M246, for Grade 250/250 polymer. Only use lock seam pipe.

   Verify the metallic coating weight on individual samples of fabricated pipe or steel sheet meets the single spot and triple spot test requirements in accordance with AASHTO M218. Refer to Table 909-6, Table 909-7, Table 909-8, Table 909-9, Table 909-10, Table 909-11, and 909-20 for the specified nominal sheet thickness for a given diameter, class, and size of corrugation of culvert or sewer pipe.

   Provide pipe less than 12 inches in diameter, fabricated from steel sheet with a minimum thickness of at least 0.064 inch (16 gage).

2. **End Finish for Helical Corrugated Pipe.** For helical corrugated pipe, except perforated pipe, with diameters of at least 12 inches, reroll the pipe ends to form at least two circumferential corrugations in accordance with AASHTO M36 or AASHTO M245. This end treatment for perforated pipe and pipe with diameters less than 12 inches and pipe that spans the road surface in a single section is optional for the fabricator.

3. **Coupling Bands.** To connect sections of pipe and to attach end sections to culvert pipe with diameters of at least 12 inches, except perforated pipe, provide coupling bands circumferentially corrugated with the same size corrugations as on the ends of the pipe or use universal bands with gaskets.

   For coupling bands with diameters no greater than 10 inches, use coupling bands with corrugations matching the pipe corrugations.

   The Contractor may connect perforated pipe with a diameter no greater than 12 inches, with smooth sleeve-type couplers. For perforated pipe with diameters greater than 12 inches, use coupling bands with corrugations matching the pipe corrugations, dimple bands, or universal bands.

   Provide coupling band connections as specified in subsection 401.03 and meeting the requirements of AASHTO M36 or AASHTO M245.

B. **Corrugated Aluminum Alloy Pipe.** Provide corrugated aluminum alloy pipe meeting the requirements of AASHTO M196, except fabricate pipe from aluminum sheet with the nominal thickness specified in Table 909-12, Table 909-13, Table 909-14, Table 909-15, Table 909-16, and Table 909-17.

Only use Type IA and Type IIA corrugated aluminum alloy pipe if directed by the Engineer.

C. **Steel End Sections.** Provide steel end sections with coupling bands or hardware as shown on the plans. Metallic coating on the end sections must be the same as the metallic coating on the pipe, except zinc coated steel end sections may be used with aluminum coated steel pipe and polymer coated steel pipe. Provide metal end sections meeting the requirements of AASHTO M36.

D. **Steel Pipe for Jacking in Place.** Provide steel pipe for jacking in place meeting the requirements of ASTM A53/A53M, for Type E or Type S, Grade B or ASTM A139/A136M, for Grade B. Provide a continuous welded joint to create a watertight casing that is capable of withstanding handling and installation stresses. Perform field welding using the shielded metal arc welding process and using E6011 or E7018 electrodes.

909.06. Plastic Pipe Products. Provide Smooth Lined Corrugated Polyethylene Pipe (CPE) and required fittings meeting the requirements of AASHTO M294, for Type S.

Provide Corrugated Polyvinyl Chloride Pipe (CPV) and required fittings meeting the requirements of AASHTO M304. The Engineer will test CPV in accordance with MTM 728.

If providing a separate fitting or coupling to ensure a watertight joint in corrugated plastic pipe culverts and sewers, use non corrugated, solid sleeve, fabricated from Polyethylene (PE) or

Polyvinyl Chloride (PVC) with a gasket meeting the requirements of subsection 909.03 on both sides of the joint. Do not use split collar couplers.

Provide a pipe indentation in each sleeve in the center to ensure positioning of the pipe sections in the field. Factory install sleeves on one end of the pipe sections and place a removable protective material over the exposed gaskets. Lubricate gaskets and sleeves before insertion according to manufacturer's recommendations.

909.07. Pipe for Underdrains.

A. **Smooth Plastic Pipe for Underdrain.** Provide smooth plastic pipe for underdrain, fabricated from PVC pipe meeting the requirements of AASHTO M278. For pipes no greater than 6 inches in diameter, the Contractor may use acrylonitrile-butadiene-styrene (ABS) pipe meeting the requirements of ASTM D2751, for SDR 35, with perforations meeting the requirements of AASHTO M278, except the joint tightness requirements do not apply.

B. **Corrugated Plastic Tubing for Underdrain.** Provide corrugated plastic tubing for underdrain meeting the requirements of AASHTO M252 for PE tubing, or ASTM F949 for PVC tubing. Ensure the perforations for PE and PVC tubing meet the requirements of AASHTO M252.

C. **Underdrain Outlets.** Provide PVC pipe underdrain outlets meeting one of the following requirements:

1. ASTM D1785 Schedule 40;
2. ASTM D2665;
3. ASTM D3034, for Type SDR 23.5; or
4. Corrugated steel pipe in accordance with subsection 909.05.A.

D. **Connections.** Seal connections with tape recommended by the manufacturer for underground service conditions. Provide tape resistant to moisture and organic growth.

909.08. Pipe for Downspouts.

A. **Bridge Deck Downspouts.** Provide bridge deck downspouts of PE pipe meeting the requirements of ASTM F714, PE 4710, DR 26, schedule 80 PVC. The Contractor may provide bridge deck downspouts of fiberglass Reinforced Thermosetting Resin Pipe (RTRP) with a short-term rupture hoops tensile stress of at least 30,000 psi, in accordance with ASTM D2996. PVC pipe must be in accordance with ASTM D1785 and ASTM D4216, to prevent changes in color, physical properties and appearance due to weathering.

B. **Culvert, Downspouts.** If shown on the plans, provide other culvert downspouts made from one of the following:

1. Corrugated steel pipe as specified in subsection 909.05.A;

2. Corrugated aluminum alloy pipe as specified in subsection 909.05.B; or
3. Corrugated Polyethylene Pipe (CPP) meeting the requirements of AASHTO M294, for Type C.

Provide fittings required for CPP meeting the requirements of AASHTO M294.

Seal joints between lengths of pipe, as recommended by the pipe manufacturer, to form silt-tight joints. Provide end sections as shown on the plans and specified in subsection 909.04.D or subsection 909.05.C.

C. **Bridge Deck Drain Extensions.** Provide bridge deck drain extensions as an integral component of the drain casting assembly in accordance with Standard Plan B-101 series.

909.09. Cold-Applied Pipe Joint Sealer. Provide asphaltic material for sealing joints in concrete or clay pipe that can be spread on the joints with a trowel at an air temperature from 14 °F to 100 °F. The material must not flow, crack, or become brittle if exposed to the atmosphere. Verify the material adheres to the concrete or clay to make a watertight seal.

Deliver the sealer to the project in sealed containers. Protect the sealer from contamination. Mark the container with “Cold Applied Pipe Joint Sealer” and the brand name, net volume or weight, and the application requirements.

909.10. Drainage Marker Posts. Provide drainage marker posts meeting the requirements for plastic or steel delineator posts as specified in section 919 or the requirements for steel line fence posts in section 907, except provide posts at least 6 feet long. The Contractor may submit alternate post materials to the Engineer for approval.

909.11. Rodent Screens. Provide rodent screens of hardware cloth meeting the requirements of ASTM A740 with an opening size no greater than 0.30 inch, except provide wire of a nominal size of 0.057 inch and a minimum zinc coating weight of 0.59 ounce per square foot of uncoated wire surface, applied after weaving. The Contractor may substitute fabric made of Type 304 stainless steel wire with an opening no greater than 0.30 inch and a 0.057 inch nominal wire diameter. The Contractor may submit other screens with openings no greater than 0.30 inch to the Engineer for approval.

Form the screen using a punch and die. After shaping ensure the fabric forms a cylinder slightly larger than the inside diameter of the outlet pipe.

Table 909-1 Additional Designs For Class II Reinforced Concrete Pipe (AASHTO M170 Table 2 Extended)					
Internal Diameter of Pipe, (in)	Minimum Wall Thickness, (in)	Reinforcement per foot of Pipe Wall, (sq in)			
		Circular Reinforcement in Circular Pipe		Elliptical Reinforcement in Circular Pipe	
		Inner Cage	Outer Cage	Inner Circular Cage	Elliptical Cage
114	9.5	0.56	0.34	0.22	0.34
120	10	0.61	0.37	0.24	0.37
126	10.5	0.65	0.39	0.26	0.39
132	11	0.70	0.42	0.28	0.42
144	12	0.80	0.48	0.32	0.48

Note: D-Load = pound-force per linear foot per foot of diameter.
D-Load to produce a 0.01 inch crack 1,000.
D-Load to produce the ultimate load, 1,500.
Concrete Strength, 5,000 psi

Table 909-2
Additional Designs For Class III Reinforced Concrete Pipe(AASHTO M170 Table 3 Extended)

Internal Diameter of Pipe, (in)	Minimum Wall Thickness, (in)	Reinforcement per foot of Pipe Wall, (sq in)				Stirrup Support System					
		Circular Reinforce-ment in Circular Pipe		Elliptical Reinforcement in Circular Pipe		Minimum Area per Support Element, (sq in) (a)	No. of Lines (b)	Long. Spacing, (in)	Circum. Spacing on Inner Cage, (in)	Amplitude of Supports, (in) (c)	Ave. Area (sq in per ft per line) (d)
		Inner Cage	Outer Cage	Inner Circular Cage	Elliptical Cage						
114	9½	0.69	0.41	0.28	0.41	0.041	5	2	6⅛	6.68	0.242
120	10	0.74	0.44	0.30	0.44	0.041	5	2	6½	7.16	0.242
126	10½	0.79	0.47	0.32	0.47	0.041	5	2	6⅞	7.68	0.242
132	11	0.85	0.51	0.34	0.51	0.041	5	2	7¼	8.16	0.242
144	12	0.97	0.58	0.39	0.58	0.041	5	2	8	9.16	0.242

Note: D-Load = pound-force per linear foot per foot of diameter.
D-Load to produce a 0.01 inch crack 1,350.
D-Load to produce the ultimate load 2000.
Concrete Strength 5000 psi.
Where a stirrup system is shown for a given size, it must be used with the circumferential reinforcement design selected.

a. Two times the cross-sectional area of the wire used in the stirrup support system using 2 in × 8 in pattern for inner cage steel.
b. Number of longitudinal lines required in the top and in the bottom portions of the pipe.
c. Overall width of each line of stirrup support system using 2 in × 8 in pattern for inner cage steel. (Use with Shearlock stirrups or S-stirrups or equal)
d. Minimum area per support times number of supports per foot using 2 in × 8 in pattern for inner cage steel.

DRAFT – July 2020

Table 909-3
Additional Designs For Class IV Reinforced Concrete Pipe(AASHTO M170 Table 4 Extended)

Internal Diameter of Pipe, (in)	Minimum Wall Thickness, (in)	Reinforcement, per foot of Pipe Wall, (sq in)				Stirrup Support System					
		Circular Reinforcement in Circular Pipe		Elliptical Reinforcement in Circular Pipe							
		Inner Cage	Outer Cage	Inner Circular Cage	Elliptical Cage	Minimum area per Support Element (sq in) (a)	Number of Lines (b)	Long. Spacing, (in)	Circum. Spacing on Inner Cage, (in)	Ampli-tude of Supports, (in) (c)	Ave. Area, (sq in per ft per line) (d)
		Concrete Strength, 5,500 psi									
78	7½	0.87	0.52	0.35	0.52						
84	8	1.00	0.60	0.40	0.64						
—	—	Concrete Strength, 5,000 psi									
78	7½	0.69	0.41	0.28	0.41	0.028	11	2	4⅛	4.67	0.167
84	8	0.74	0.44	0.30	0.44	0.028	11	2	4⅝	5.17	0.167
90	8	0.85	0.51	0.34	0.51	0.028	11	2	4⅝	5.17	0.167
96	8½	0.91	0.55	0.36	0.55	0.028	11	2	5⅛	5.67	0.167
102	8½	1.02	0.61	0.41	0.61	0.033	11	2	5⅛	5.67	0.195
108	9	1.07	0.64	0.43	0.64	0.043	11	2	5⅝	6.17	0.260
114	9½	1.02	0.61	0.41	0.61	0.047	11	2	6⅛	6.67	0.279
120	10	1.10	0.66	0.44	0.66	0.050	11	2	6½	7.17	0.298
126	10½	1.17	0.70	0.47	0.70	0.053	11	2	6⅞	7.67	0.316
132	11	1.25	0.75	0.50	0.75	0.056	11	2	7¼	8.17	0.335
144	12	1.42	0.85	0.57	0.85	0.064	11	2	8	9.17	0.381

Note: D-Load = pound-force per linear foot per foot of diameter.
D-Load to produce a 0.01 inch crack, 2,000.
D-Load to produce the ultimate load, 3,000.
Where a stirrup system is shown for a given size, it must be used with the circumferential reinforcement design selected.

a. Two times the cross-sectional area of the wire used in the S-stirrups.
b. Number of longitudinal lines required in the top and in the bottom portions of the pipe.
c. Overall width of each line of stirrup support system using 2 in × 8 in pattern for inner cage steel. (Use with Shearlock stirrups or S-stirrups or equal.)
d. Minimum area per support times number of supports per foot using 2 in × 8 in pattern for inner cage steel.

Table 909-4
Additional Designs for Class V Reinforced Concrete Pipe (AASHTO M170 Table 5 Extended)

Internal Diameter of Pipe, (in)	Wall Thickness, (in min)	Reinforcement, sq in per foot of Pipe Wall				Stirrup Support System					
		Circular Reinforcement in Circular Pipe		Elliptical Reinforcement in Circular Pipe		Minimum Area per Support Element, (sq in) (a)	Number of Lines (b)	Long. Spacing, (in)	Circum. Spacing on Inner Cage, (in)	Ampli-tude of Supports, (in) (c)	Ave. Area, (sq in per ft per line) (d)
		Inner Cage	Outer Cage	Inner Circular Cage	Elliptical Cage						
54	5½	0.64	0.38	0.26	0.38	0.028	15	2	2⅛	2.68	0.167
60	6	0.70	0.42	0.28	0.42	0.028	14	2	2⅝	3.20	0.167
66	6½	0.79	0.47	0.32	0.47	0.028	13	2	3⅛	3.68	0.167
72	7	0.87	0.52	0.35	0.52	0.028	12	2	3⅝	4.16	0.167
78	7½	0.92	0.55	0.37	0.55	0.028	11	2	4⅛	4.68	0.167
84	8	0.99	0.59	0.40	0.59	0.033	11	2	4⅝	5.16	0.195
90	8	1.13	0.68	0.45	0.68	0.040	11	2	4⅝	5.16	0.248
96	8½	1.20	0.72	0.48	0.72	0.043	11	2	5⅛	5.68	0.260
102	8½	1.34	0.80	0.54	0.80	0.051	11	2	5⅛	5.68	0.307
108	9	1.51	0.91	0.60	0.91	0.061	11	2	5⅝	6.16	0.363
114	9½	1.51	0.91	0.60	0.91	0.062	11	2	6⅛	6.68	0.372
120	10	1.62	0.97	0.65	0.97	0.067	11	2	6½	7.16	0.400
126	10½	1.73	1.04	0.69	1.04	0.070	11	2	6⅞	7.68	0.419
132	11	1.84	1.10	0.74	1.10	0.074	11	2	7¼	8.16	0.446
144	12	2.09	1.25	0.84	1.25	0.082	11	2	8	9.16	0.493

Note: D-Load = pound-force per linear foot per foot of diameter.
D-Load to produce a 0.01 inch crack, 3,000.
D-Load to produce the ultimate load, 3,750.
Concrete Strength, 6,000 psi.
Where a stirrup system is shown for a given size, it must be used with the circumferential reinforcement design selected.

a. Two times the cross-sectional area of the wire used in the Stirrups Support System using 2 in × 8 in pattern for inner cage steel. (Use with Shearlock stirrups or S-stirrups or equal.)
b. Number of longitudinal lines required in the top and in the bottom portions of the pipe.
c. Overall width of each line of stirrups.
d. Minimum area per support times number of supports per foot using 2 in × 8 in pattern for inner cage steel

Table 909-5
Additional Designs for Horizontal Elliptical Pipe

Specified Diameter, Equivalent Round Size (in)	Specified Rise by Span (in)	Min Wall Thick (in)	Reinforcement, sq in per foot													
			Class HE-A		Class HE-I		Class HE-II		Class HE-III		Class HE-IV					
			D-Loads										Stirrup Support System			
			0.01 = 600		0.01 =800		0.01 =1000		0.01 =1350		0.01 =2000		Min Area per Support Element (sq in)	Number of Lines (a)	Long. Spacing (in)	Circum. Spacing on Inner Cage (in) (b)
			Ult = 900		Ult = 1200		Ult = 1500		Ult = 2000		Ult = 3000					
			In Cage	Out Cage	In Cage	Out Cage	In Cage	Out Cage	In Cage	Out Cage	In Cage	Out Cage				
48	38 × 60	5½	—	—	—	—	—	—	—	—	0.70	0.70	0.13	15	2	3.000
54	43 × 68	6	—	—	—	—	—	—	—	—	0.82	0.82	0.15	15	2	3.375
60	48 × 76	6½	—	—	—	—	—	—	—	—	0.94	0.94	0.17	15	2	3.750
66	53 × 83	7	—	—	—	—	—	—	—	—	0.99	0.99	0.17	15	2	4.125
72	58 × 91	7½	—	—	—	—	—	—	—	—	1.11	1.11	0.19	15	2	4.500
84	63 × 98	8	—	—	—	—	—	—	—	—	1.21	1.21	0.21	15	2	4.875
78	68 × 106	8½	—	—	—	—	—	—	—	—	1.33	1.33	0.22	15	2	5.250
90	72 × 113	9	0.28	0.28	0.40	0.40	0.58	0.58	—	0.84	1.43	1.43	0.24	15	2	5.625
96	77 × 121	9½	0.30	0.30	0.45	0.45	0.65	0.65	0.92	0.92	1.56	1.56	0.26	15	2	6.000
102	82 × 128	9¾	0.33	0.33	0.52	0.52	0.73	0.73	1.03	1.03	1.72	1.72	0.28	15	2	6.188
108	87 × 136	10	0.36	0.36	0.60	0.60	0.83	0.83	1.16	1.16	1.92	1.92	0.30	15	2	6.375
114	92 × 143	10 ½	0.40	0.40	0.64	0.64	0.88	0.88	1.23	1.23	2.02	2.02	0.32	15	2	6.750
120	97 × 151	11	0.44	0.44	0.70	0.70	0.96	0.96	1.32	1.32	2.16	2.16	0.34	15	2	7.125
132	106 × 166	12	0.53	0.53	0.81	0.81	1.09	1.09	1.49	1.49	2.40	2.40	0.38	15	2	7.875
144	116 × 180	13	0.61	0.61	0.91	0.91	1.21	1.21	1.64	1.64	2.62	2.62	0.42	15	2	8.625
Concrete Strength, psi			4,000		4,000		4,000		5,000		48 in, 54 in, 60 in 4,000 66 in – 144 in 5,000					

Note: Where a stirrup system is shown for a given size, it must be used with the circumferential reinforcement design selected.
a. Number of longitudinal lines required in the top and in the bottom portions of the pipe.
b. Overall width of each line of stirrups.

DRAFT – July 2020

Table 909-6 References for Spiral Ribbed and Corrugated Metal Pipes			
	Driveway Culverts and Downspouts	**Culverts**	**Sewers**
	Minimum Design Life		
Pipe Material Type	**25 years**	**50 years**	**70 years**
Galvanized Spiral Ribbed Metal Pipe	Table 909-8	0.109	0.168
Aluminized Type 2 Spiral Ribbed Metal Pipe	Table 909-8	Table 909-11	0.138
Polymer-Precoated Spiral Ribbed Metal Pipe	Table 909-8	Table 909-8	Table 909-8
Galvanized Corrugated Metal Pipe	Table 909-7	Table 909-9	0.168 (a)
Aluminized Type 2 Corrugated Metal Pipe	Table 909-7	Table 909-10	0.138 (a)
Polymer-Precoated Corrugated Galvanized Pipe	Table 909-7	Table 909-7	Table 909-7 (a)
Aluminum pipe	Table 909-12	Table 909-13	Table 909-14
Aluminum Spiral Ribbed Pipe	Table 909-15	Table 909-16	Table 909-17
Dual Wall Polymer-Precoated Galvanized Corrugated Steel Pipe	Table 909-20	Table 909-20	Table 909-20

Note: Minimum wall thickness in inches to meet structural and durability requirements for various metal pipes to meet the design life.
Numbers represent the minimum durability gage requirements for the specific pipe material.
Table 909-7 represents the minimum structural gauge thickness requirements for corrugated steel pipe.
Table 909-8 represents the minimum structural gauge thickness requirements for spiral ribbed steel pipe.

a. Permitted for 12 in to 18 in diameter 2⅔ in × ½ in helically corrugated pipe only.

Table 909-7 Wall Thickness Requirements in Inches, Based on Diameter Class of Pipe, and Size of Corrugation								
Pipe Diameter, (in)	**0 ft – 16 ft**		**>16 ft – 24 ft**			**>24 ft – 32 ft**		
	Corrugation Size, (in)		**Corrugation Size, (in)**			**Corrugation Size, (in)**		
	2⅔ × ½	**3 × 1, 5 × 1**	**2⅔ × ½**	**3 × 1**	**5 × 1**	**2⅔ × ½**	**3 × 1**	**5 × 1**
12–30	0.064	—	0.064	—	—	0.064	—	—
36–48	0.064	0.064	0.064	0.064	0.064	0.064a	0.064	0.064
54	0.079	0.064	0.079	0.064	0.064	0.079	0.064	0.064
60	0.109	0.064	0.109	0.064	0.064	0.109	0.064	0.064
66	0.138	0.064	0.138	0.064	0.064	0.138	0.064	0.064
72	0.138	0.064	0.138	0.064	0.064	0.138	0.064	0.064
78	0.168	0.064	0.168	0.064	0.064	0.168	0.064	0.064
84	0.168	0.064	0.168	0.064	0.064	0.168	0.064	0.079
90	—	0.064	—	0.064	0.064	—	0.079	0.079
96	—	0.079	—	0.079	0.079	—	0.079	0.079
102	—	0.079	—	0.079	0.079	—	0.079	0.109
108–120	—	0.109	—	0.109	0.109	—	0.109	0.109
126	—	0.138	—	0.138	0.138	—	0.138	0.138
130–136	—	0.138	—	0.138	0.138	—	0.138	0.138
144	—	0.168	—	0.168	0.168	—	0.168	0.168

DRAFT – July 2020

Table 909-8 Wall Thickness Requirements in Inches Based on Diameter, Class of Pipe, and Size of Ribs						
Pipe Diameter, (in)	0 ft – 16 ft		>16 ft – 24 ft		>24 ft – 32 ft	
	Corrugation Size, (in)		Corrugation Size, (in)		Corrugation Size, (in)	
	¾ × ¾ × 7½	¾ × 1 × 11½	¾ × ¾ × 7½	¾ × 1 × 11½	¾ × ¾ × 7½	¾ × 1 × 11½
18–36	0.064	0.064	0.064	0.064	0.064	0.064
42	0.064	0.064	0.064	0.064	0.064	0.079
48	0.064	0.064	0.064	0.079	0.064	0.079
54	0.079	0.064	0.079	0.079	0.079	0.109
60	0.079	0.079	0.079	0.079	0.079	0.109
66	0.109	0.079	0.109	0.109	0.109	0.109
72–78	0.109	0.109	0.109	0.109	0.109	0.109
84	—	0.109	—	0.109	—	0.109

Table 909-9 Wall Thickness Requirements in Inches Based on Class of Pipe and Size of Corrugation							
Pipe Diameter, (in)	Class A and Class B		Class C		Class D		
	Corrugation Size, (in)		Corrugation Size, (in)		Corrugation Size, (in)		
	2⅔ × ½	3 × 1, 5 × 1	2⅔ × ½	3 × 1, 5 × 1	2⅔ × ½	3 × 1	5 × 1
12–30	0.109	—	0.109	—	0.109	—	—
36–60	0.109	0.109	0.109	0.109	0.107	0.109	0.109
66–72	0.138	0.109	0.138	0.109	0.138	0.109	0.109
78–84	0.168	0.109	0.168	0.109	0.168	0.109	0.109
90–102	—	0.109	—	0.109	—	0.109	0.109
108–120	—	0.109	—	0.109	—	0.109	0.109
126	—	0.138	—	0.138	—	0.138	0.138
130–136	—	0.138	—	0.138	—	0.138	0.138
144	—	0.168	—	0.168	—	0.168	0.168

Table 909-10 Wall Thickness Requirements in Inches Based on Diameter, Class of Pipe and Size of Corrugation								
Pipe Diameter, (in)	Class A and B		Class C			Class D		
	Corrugation Size, (in)		Corrugation Size, (in)			Corrugation Size, (in)		
	2⅔ × ½	3 × 1, 5 × 1	2⅔ × ½	3 × 1	5 x 1	2⅔ × ½	3 × 1	5 x 1
12–30	0.079	—	0.079	—	—	0.079	—	—
36–54	0.079	0.079	0.079	0.079	0.079	0.079	0.079	0.079
60	0.109	0.079	0.109	0.079	0.079	0.109	0.079	0.079
66–72	0.138	0.079	0.138	0.079	0.079	0.138	0.079	0.079
78–84	0.168	0.079	0.168	0.079	0.079	0.168	0.079	0.079
90–96	—	0.079	—	0.079	0.079	—	0.079	0.079
102	—	0.079	—	0.079	0.079	—	0.079	0.109
108–120	—	0.109	—	0.109	0.109	—	0.109	0.109
126	—	0.138	—	0.138	0.138	—	0.138	0.138
130–136	—	0.138	—	0.138	0.138	—	0.138	0.138
144	—	0.168	—	0.168	0.168	—	0.168	0.168

Table 909-11 Wall Thickness Requirements in Inches Based on Diameter, Class of Pipe, and Size of Ribs						
Pipe Diameter, (in)	Class A and B		Class C		Class D	
	Corrugation Size, (in)		Corrugation Size, (in)		Corrugation Size, (in)	
	¾ × ¾ × 7½	¾ × 1 × 11½	¾ × ¾ × 7½	¾ × 1 × 11½	¾ × ¾ × 7½	¾ × 1 × 11½
18–48	0.079	0.079	0.079	0.079	0.079	0.079
54–60	0.079	0.079	0.079	0.079	0.079	0.109
66–78	0.109	0.109	0.109	0.109	0.109	0.109
84	—	0.109	—	0.109	—	0.109

Table 909-12 Wall Thickness Requirements in Inches, Based on Class of Pipe and Size of Corrugation, Lock Seam Pipe Only						
Pipe Diameter, (in)	0 ft – 16 ft		>16 ft – 24 ft		>24 ft – 32 ft	
	Corrugation Size, (in)		Corrugation Size, (in)		Corrugation Size, (in)	
	2⅔ × ½	3 × 1	2⅔ × ½	3 × 1	2⅔ × ½	3 × 1
12–27	0.060	0.060	0.060	0.060	0.060	0.060
30–36	0.075	0.060	0.075	0.060	0.075	0.060
42–54	0.105	0.060	0.105	0.060	0.105	0.060
60	0.135	0.075	0.135	0.075	0.135	0.075
66–72	0.164	0.075	0.164	0.075	0.164	0.075
78	—	0.075	—	0.075	—	0.075
84–96	—	0.105	—	0.105	—	0.105
102–108	—	0.135	—	0.135	—	0.135
112–120	—	0.164	—	0.164	—	0.164

Table 909-13 Wall Thickness Requirements in Inches, Based on Class of Pipe and Size of Corrugation, Lock Seam Pipe Only		
Pipe Diameter, (in)	**Class A, B, C, D**	
	Corrugation Size, (in)	
	2⅔ × ½	**3 × 1**
12–36	0.075	0.075
42–54	0.105	0.075
60	0.135	0.075
66–72	0.164	0.075
78	—	0.075
84–96	—	0.105
102–108	—	0.135
112–120	—	0.164

Table 909-14 Wall Thickness Requirements in Inches, Based on Class of Pipe and Size of Corrugation, Lock Seam Pipe Only		
Pipe Diameter, (in)	**Class A, B, C, D**	
	Corrugation Size, (in)	
	2⅔ × ½	**3 × 1**
12–54	0.105	0.105
60	0.135	0.105
66–72	0.164	0.105
78–96	—	0.105
102–108	—	0.135
112–120	—	0.164

Table 909-15 Wall Thickness Requirements in Inches, Based on Diameter, Class of Pipe, and Size of Rib, Lock Seam Pipe Only	
Pipe Diameter, (in)	**Class F**
	¾ × ¾ × 7½
18–24	0.060
30–36	0.075
42–54	0.105
60–66	0.135

Table 909-16 Wall Thickness Requirements in inches, Based on Diameter, Class of Pipe, and Size of Rib, Lock Seam Pipe Only	
Pipe Diameter, (in)	**Class A, B, C, D**
	¾ × ¾ × 7½
18–36	0.075
42–54	0.105
60–66	0.135

Table 909-17 Wall Thickness Requirements in Inches, Based on Diameter, Class of Pipe, and Size of Rib, Lock Seam Pipe Only	
Pipe Diameter, (in)	Class A, B, C, D
	¾ × ¾ × 7½
18–54	0.105
60–66	0.135

Table 909-18 Nominal OD and Wall Thickness in Inches Jacked In Place Steel Pipe		
Nominal Size	Nominal Outside Diameter	Wall Thickness
2	2.375	0.154
4	4.500	0.188
6	6.625	0.188
8	8.625	0.188
10	10.750	0.188
12	12.750	0.188
14	14.000	0.250
16	16.000	0.250
18	18.000	0.250
20	20.000	0.250
24	24.000	0.250
30	30.000	0.312
36	36.000	0.312
42	42.000	0.438
48	48.000	0.500
54	54.000	0.563

Table 909-19 Gage Equivalents to Nominal Thickness		
Sheet Gauge Number	Nominal Thickness	
	Galvanized	Aluminum Alloy
18	0.052	0.048
16	0.064	0.060
14	0.079	0.075
12	0.109	0.105
10	0.138	0.135
8	0.168	0.164
7	0.188	—
5	0.218	—
3	0.249	—
1	0.280	—

Table 909-20 Dual Wall Polymer-Precoated Galvanized Corrugated Steel Pipe Wall Thickness Requirements in inches Based on Diameter and Size of Corrugation				
Diameter of Pipe, (in)	**Corrugation Size, (in)**		**Corrugation Size, (in)**	
	2⅔ × ½		**3 × 1**	
	Shell	**Liner**	**Shell**	**Liner**
36–48	0.064	0.052	0.064	0.052
54	0.079	0.052	0.064	0.052
60	0.109	0.052	0.064	0.052
66–72	0.138	0.052	0.064	0.052
78–84	0.168	0.052	0.064	0.052
90–102	—	—	0.079	0.052
108–120	—	—	0.109	0.052
126–136	—	—	0.138	0.052
144	—	—	0.168	0.052

Table 909-21 Corrugated Steel Pipe (CSP) AASHTO LRFD Cover Heights for CSP Pipe-Arch 3 in x 1 in				
Span x Rise (in)	Equiv Dia (in)	Min Nominal Thickness (in) (a)	Min Cover (ft)	Max Cover (ft)
53 x 41	48	0.079	2.0	11
60 x 46	54	0.079	2.0	20
66 x 51	60	0.079	1.2	20
73 x 55	66	0.079	1.2	20
81 x 59	72	0.079	1.5	16
87 x 63	78	0.079	1.5	16
95 x 67	84	0.079	1.5	16
103 x 71	90	0.079	1.5	16
112 x 75	96	0.109	1.5	16
117 x 79	102	0.109	1.5	16
128 x 83	108	0.138	1.5	16
137 x 87	114	0.138	1.6	16
142 x 91	120	0.138	1.6	16
a. Manufacturing limitations include a 0.079 inch minimum nominal thickness for 3 in x 1 in Pipe-Arch				

Table 909-22 Corrugated Steel Pipe (CSP) AASHTO LRFD Cover Heights for CSP Pipe-Arch 5 in x 1 in				
Span x Rise (in)	Equiv Dia (in)	Min Nominal Thickness (in) (a)	Min Cover (ft)	Max Cover (ft)
53 x 41	48	0.109	2.0	11
60 x 46	54	0.109	1.2	20
66 x 51	60	0.109	1.2	20
73 x 55	66	0.109	1.2	20
81 x 59	72	0.109	1.5	16
87 x 63	78	0.109	1.5	16
95 x 67	84	0.109	1.5	16
103 x 71	90	0.109	1.5	16
112 x 75	96	0.109	1.5	16
117 x 79	102	0.109	1.5	16
128 x 83	108	0.138	1.5	16
137 x 87	114	0.138	1.6	16
142 x 91	120	0.138	1.6	16
a. Manufacturing limitations include a 0.109 inch minimum nominal thickness for 5 in x 1 in Pipe-Arch				

Table 909-23 Corrugated Steel Pipe (CSP) AASHTO LRFD Cover Heights for CSP Pipe-Arch 2⅔ in x ½ in				
Span x Rise (in)	Equiv Dia (in)	Min Nominal Thickness (in)	Min Cover (ft)	Max Cover (ft)
17 x 13	15	0.064	1.9	12
21 x 15	18	0.064	2.0	12
24 x 18	21	0.064	1.9	12
28 x 20	24	0.064	2.0	12
35 x 24	30	0.064	2.0	12
42 x 29	36	0.064	2.0	12
49 x 33	42	0.079	2.0	12
57 x 38	48	0.109	2.0	11
64 x 43	54	0.109	2.0	11
71 x 47	60	0.138	2.0	11
77 x 52	66	0.168	2.0	12
83 x 57	72	0.168	2.0	12

Table 909-24 Corrugated Steel Pipe (CSP) AASHTO LRFD Cover Heights for CSP Pipe-Arch ¾ in x ¾ in x 7½ in Spiral Rib Pipe				
Span x Rise (in) (a)	Equiv Dia (in)	Min Nominal Thickness (in)	Min Cover (ft)	Max Cover (ft)
20 x 16	18	0.064	1.6	15
23 x 19	21	0.064	1.7	14
27 x 21	24	0.064	1.8	13
33 x 26	30	0.064	1.8	13
40 x 31	36	0.064	1.9	13
46 x 36	42	0.064	1.8	13
53 x 41	48	0.064 (b)	1.9	13
60 x 46	54	0.079	1.3	20
66 x 51	60	0.079 (b)	1.3	20
73 x 55	66	0.109	1.3	20
81 x 59	72	0.109 (b)	1.5	16
87 x 63	78	0.138	1.5	16
95 x 67	84	0.138	1.5	16
103 x 71	90	0.138 (b)	1.5	16
a. ASTM A760 makes provisions for two additional sizes: 112 in x 75 in and 117 in x 79 in. b. Trench installation only. Embankment installations may be used for the heavier gages.				

Section 910. GEOSYNTHETICS

910.01. General Requirements. Geosynthetics must be composed of long chain synthetic fiber of at least 85 percent, by weight, polyolefins or polyesters. Geosynthetics must be capable of resisting degradation from chemicals, mildew, rot, and ultraviolet (UV) light.

Deliver and store geosynthetics in packaging capable of resisting UV radiation, contaminants, and moisture. Label each unit of material with product information including supplier and lot identification. Do not expose geosynthetics to direct sunlight for prolonged periods. Repair or replace damaged geosynthetics at no additional cost to the Department.

910.02. Testing. Geosynthetic testing will be in accordance with the specified ASTM, or Department methods, as modified by this section.

Geosynthetics must meet the physical property requirements shown in Tables 910-1 and 910-2. The directional property values listed in Table 910-1 specify values for the weaker principle direction.

910.03. Geotextiles. Geotextiles are flexible, permeable fabrics, consisting of synthetic fibers or yarns oriented into a dimensionally stable network. Woven geotextiles must have sealed or selvaged edges to prevent raveling.

A. **Geotextile Blanket.** Geotextile for filtration applications, including trench lining, ditch lining, streambed protection, pipe wrap, joint wrap, drainhole and weephole filter, granular blanket separation, and filter bags must be non-woven and meet the requirements shown in Table 910-1 for geotextile blanket.

B. **Geotextile Liner.** Geotextile for erosion control in riprap and similar applications must be non-woven and meet the requirements shown in Table 910-1 for geotextile liner. Geotextile for use with heavy riprap must be non-woven and meet the requirements shown in Table 910-1 for heavy geotextile liner.

C. **Geotextile Separator.** Geotextile used to prevent intermixing of dissimilar aggregate or soil layers must meet the requirements shown in Table 910-1 for geotextile separator. Geotextiles separators with grab tensile elongation-at-break less than 50 percent must meet the requirements shown in Table 910-1 for woven geotextile separator. Geotextiles with grab tensile elongation-at-break equal to or greater than 50 percent must meet the strength requirements shown in Table 910-1 for non-woven geotextile separator.

D. **Stabilization Geotextile.** Geotextile used to prevent intermixing of soft subgrade and subbase materials must meet the requirements shown in Table 910-1 for stabilization geotextile. Stabilization geotextile with grab tensile elongation-at-break less than 50 percent must meet the requirements shown in Table 910-1 for woven stabilization geotextile. Geotextiles with grab

tensile elongation-at-break equal to or greater than 50 percent must meet the strength requirements shown in Table 910-1 for non-woven stabilization geotextile.

910.04. Silt Fence Geotextile. Select geotextile for fabricating silt fence from the Qualified Products List. Geotextile for silt fence must have a nominal height of 3 feet and must meet the requirements shown in Table 910-1 for silt fence. Geotextile for silt fence must have a retained strength of at least 70 percent after 500 hours of UV exposure, when tested in accordance with ASTM D4355/D4355M. Fabricate silt fence according to subsection 916.02.

910.05. Drainage Geocomposites. Drainage geocomposites must meet the requirements shown in Table 910-1 and this subsection.

Prefabricated geocomposites for drainage applications must consist of a geotextile bonded to or wrapped around a polymer core having corrugated, dimpled, tubular, or net (mesh) configurations. Geocomposites must have sufficient flexibility and durability to withstand installation, handling, and permanent loading stresses.

Fittings for geocomposite installations must be manufactured by the geocomposite manufacturer or meet the published specifications of the geocomposite manufacturer. Provide tape, used to seal connections, with adhesive resistant to moisture and organic growth and recommended by the manufacturer for underground service conditions.

Obtain the Engineer's approval for all components of the geocomposite system before installation.

A. **Wall Drain.** Wall drains for single direction cross planar flow must consist of an impermeable polymer core, with geotextile bonded to one side. The geocomposite must have a minimum crush strength of 4,000 pounds per square foot at no more than 18 percent deformation when tested according to MTM 411.

B. **Geocomposite Net.** The Engineer may allow geocomposite net consisting of geotextile blanket bonded to both sides of a mesh core as an alternate to open graded aggregate drainage layers.

The Engineer will approve the geocomposite net based on durability, drainage capacity, crush resistance, tensile strength, and thickness.

910.06. Road Grade Biaxial Geogrid. The geogrid must be a regular grid structure and must have aperture geometry, and rib and junction cross-section sufficient to permit significant mechanical interlock with the material being reinforced. The geogrid must have significant dimensional stability through all ribs and junctions of the grid structure. The geogrid must maintain its reinforcement and interlock capabilities under repeated dynamic loads while in service. The geogrid must also be resistant to ultraviolet degradation, to damage under normal construction practices, and to all forms of biological or chemical degradation normally encountered in highway construction.

The geogrid must be composed of polypropylene, high-density polyethylene, or polyester virgin resins. The protective coatings of polyester geogrids must contain less than 5 percent filler content. Repair damaged coating prior to backfilling. The geogrid must meet the physical property requirements of Table 910-2.

Table 910-1 Physical Requirements for Geotextiles					
	Property				
	Grab Tensile Strength (min) (lb)	Trapezoid Tear Strength (min) (lb)	Puncture Strength (min) (lb)	Permittivity (min) (per second)	Apparent Opening Size (max) (mm)
	Test Method				
Geotextile Category	ASTM D4632/D4632M	ASTM D4533/D4533M	ASTM D6241	ASTM D4491/D4491M	ASTM D4751
Geotextile Blanket (a)	120	45	230	0.5	0.21
Geotextile Liner	200	75	440	0.5	0.21
Heavy Geotextile Liner	270	100	620	0.5	0.21
Woven Geotextile Separator	270	100	620	0.05	0.425
Non-Woven Geotextile Separator	200	75	440	0.5	0.425
Woven Stabilization Geotextile	270	100	620	0.05	0.50
Non-Woven Stabilization Geotextile	270	100	620	0.5	0.50
Silt Fence	100 (b)	45	—	0.1	0.60
Drainage Geocomposites	200	75	440	0.5	0.21

a. For pipe wrap where backfill around the pipe meets granular material Class IIAA requirements; geotextiles, including knitted polyester sock, which meet the following minimum requirements in the applied condition are permitted: Mass/Unit Area: 3.0 oz/yd^2; Mullen burst strength: 100 psi; maximum apparent opening size must be 0.30 mm for pavement and foundation underdrains, and 0.60 mm in other areas. The fluid displacement rate for the Mullen burst test equipment must be 170 mL/min ± 5 mL/min. Subtract tare strength from the ultimate burst strength as specified in ASTM D3786/D3786M.

b. Elongation at the specified grab tensile strength no greater than 40% for silt fence.

Table 910-2 Physical Requirements for Road Grade Biaxial Geogrid		
Property	**Test Method**	**Minimum Value** (except where noted below)
Interlock Open Area	COE Method(a)	60 %
Ultimate Strength MD(c) CMD(c)	ASTM D6637/D6637M(b)	 1200 lb/ft 1950 lb/ft
Individual Junction Strength MD(c) CMD(c)	ASTM D7737/D7737M	 130 lb 170 lb
Tensile Modulus (2%) MD(c) CMD(c)	ASTM D6637/D6637M(b)	 18000 lb/ft 30000 lb/ft
Aperture Size MD(c) CMD(c)	Measured	 1.0 in (Nominal Value) 1.3 in (Nominal Value)

a. Percent open area measured without magnification by means of Corps of Engineers method as specified in CW 02215 Civil Works Construction Guide, November, 1977.

b. Ultimate Strength and Tensile Modulus at 2 percent elongation measured by means of ASTM D6637/D6637M “Standard Test Method for Determining Tensile Properties of Geogrids by the Single or Multi-Rib Tensile Method”. No offset allowances or specimen pretensioning are made in calculating tensile modulus.

c. "MD" and "CMD" represent 'machine' and 'cross-machine' directions, referring to the principle directions of the manufacturing process.

Section 911. WATER

911.01. General Requirements. Water must be clean, clear, and free of oil, salt, acid, alkali, organic matter, chlorides, or other deleterious material.

911.02. Turf, Turf Establishment, and Landscape Plants. Provide water from a potable or non-potable water source approved by the Engineer. Use irrigation quality water, free of elements harmful to plant growth.

911.03. Mixing or Curing Concrete, Mortar, Grout, and Other Cementitious Products. Potable water, from sources approved by the State Department of Public Health or equivalent approved by the Engineer, is acceptable without testing.

Surface water from sources including, but not limited to ditches, lakes, ponds, quarries, rivers, streams, wetlands, and other similar untreated sources, is prohibited for mixing or curing concrete, mortar, grout, and other cementitious products. Stationary concrete batch plants may use surface water if the facility has established at least a 5-year history of producing consistent concrete products meeting the required specifications. Stationary concrete batch plants using surface water are required to meet the non-potable water sampling and testing requirements.

Non-potable must meet the requirements of Table 911-1. Do not use non-potable water unless approved by the Engineer.

Test non-potable water prior to use, once per month (once per six months for stationary concrete batch plants), thereafter, and at any time the water source may be deemed out of compliance due to changing site conditions, as determined by the Engineer. Water must be sampled and tested by a qualified independent testing laboratory, having no association with the supply or production of materials produced by that concrete facility, at the expense of the Contractor. Submit test results to the Engineer for approval prior to use, and within 3 days of completion of testing. If water fails to meet the requirements of this specification, immediately suspend use of water source, bring water into compliance, and retest. Do not resume use of the water source until approved by the Engineer.

Table 911-1
Non-Potable Water Requirements

Property		Specification
Total Solids (TS)	ASTM C1602	≤0.30%
Total Organic Content / Carbon (TOC)	*SM 2540 E*	≤0.05%
Alkalinity-Acidity (pH)	ASTM D1067	5.5 – 8.5
Chloride (CL-)	ASTM D512	≤0.05%
Time of Setting	ASTM C1602	-1:00 hours to +1:30 hours of control
7-Day Compressive Strength	ASTM C1602	≥90% of control

Section 912. TIMBER AND LUMBER

912.01. General Requirements. Timber and lumber, timber piles, posts and blocks for guardrails, sign posts, mailbox posts, guard posts, guide posts, fence posts, and timber for rustic construction must meet the requirements of this section.

In case of a conflict between the AWPA and ASTM Standards, the AWPA Standards take precedence.

Machine or manufacture material, including bored holes, saw cuts, routs, and kerfs, to the required shape before applying preservative treatment.

The commercial and common names for domestic hardwood and softwood timber and lumber are as specified in ASTM D1165.

912.02. Quality Control.

A. **General.** The supplier is responsible for quality control and inspection of material. Material must be graded before shipment in accordance with the grading rules of ASTM D245 and marked with the approved grading agency stamp showing the mill origin, species, and grade. The required grading agency stamp or marking must be legible on a wide face at the trimmed end before and after treating.

B. **Inspection Prior to Preservative Treatment.** Before treating timber and lumber, inspect material for quality, size, and straightness. This inspection does not waive the Department's right to inspection and rejection of material in accordance with subsection 105.05.

C. **Inspection of Preservative Treatment.** Inspect chemical preservatives, treatment processes, and treated material in accordance with AWPA M 2, "Standard for Inspection of Treated Timber Products," and M 3, "Standard Quality Control Procedures for Wood Preserving Plants," and other relevant AWPA Standards. The treater must determine if the preservatives used conform to the requirements.

For single treatment charges, analyze the preservative at least once per charge. For consecutive treatments from the same working tank, analyze the first charge and at least one of every five additional charges, selected at random.

Collect preservative samples that are representative of the solution used in the actual treatment process.

D. **Results of Treatment.** Ensure the treatment results, including preservative analysis and penetration and retention determinations, meet AWPA Standards.

E. **Inspection Records.** Provide a signed inspection certificate for each material shipment. Provide copies of treatment records, analysis records and other records ensuring that the treatment conforms to specification requirements to the Engineer upon request. Retain the records at the treatment plant for at least 5 years from the date the material is shipped to the project. Refer to AWPA M 2 for required information.

F. **Painting Treated Wood.** Air season wood for at least 30 days and remove preservative dust from the wood before painting.

912.03. Field Treatment of Preservative Treated Material.

A. **General.** Field treat saw cuts, routs, kerfs, holes, and other injuries to preservative-treated material occurring after pressure treatment by brushing, dipping, soaking, or coating. Do not spray. Saturate injuries with the field treating solution. Fill bored holes with preservative.

The Contractor may fill horizontal holes by temporarily plugging one end of a hole and using a bent funnel to pour preservative into the other end of the hole.

B. **Preservative.** Use a 2.0 percent solution of copper naphthenate, based on copper as metal, meeting the requirements for AWPA Standard M4 for field treatment. Ensure a State of Michigan Certified Commercial Pesticide Applicator applies the copper naphthenate.

912.04. Terminology Used in Timber and Lumber Specifications. Refer to ASTM D9, Standard Terminology Relating to Wood, and AWPA M 5, Glossary of Terms Used in Wood Preservation for additional wood and wood preservation terms.

Annual Ring. The growth layer produced by the tree in a single growth year, including earlywood and latewood.

Bark. The layer of a tree, outside the cambian, comprising the inner bark, or thin, inner living part (phloem), and the outer bark, or corky layer, composed of dry, dead tissue.

Bird Peck. A small hole or patch of distorted grain resulting from birds pecking through the growing cells in the tree. Bird peck usually resembles a carpet tack with the point toward the bark, and it is usually accompanied by discoloration extending for a considerable distance along the grain and to a much lesser extent across the grain. The discoloration produced by bird peck causes what is commonly known as mineral streak.

Boxed Heart. The term used when the pith falls entirely within the four faces of a piece of wood anywhere in its length. Also called boxed pith.

Check. A lengthwise separation of the wood that usually extends across the rings of annual growth and commonly results from stresses set up in wood during seasoning. Checks are measured as an average of the penetration perpendicular to the wide face. Where two or

more checks appear on the same face, only the deepest one is measured. Where two checks are directly opposite each other, the sum of their depths is used.

Contiguous Checks. Individual checks that are adjoining though not in contact with adjacent checks.

Crook or Sweep. A distortion of a piece of lumber or post in which there is a deviation in a direction perpendicular to the edge from a straight line from end to end of the piece.

Decay. The decomposition of wood substance caused by action of wood destroying fungi, resulting in softening, loss of strength and weight and often in change of texture and color.

Advanced (or typical) Decay. The older stage of decay in which the destruction is readily recognized because the wood has become punky, soft and spongy, stringy, ring-shaked, pitted, or crumbly. Decided discoloration or bleaching of the rotted wood is often apparent.

Incipient Decay. The early stage of decay that has not proceeded far enough to soften or otherwise perceptibly impair the hardness of the wood. It is usually accompanied by a slight discoloration or bleaching of the wood.

Defect. Any irregularity or imperfection occurring in or on the wood that may lower its durability or strength.

Grain. The direction, size, arrangement, appearance, or quality of the fibers in wood or lumber.

Heartwood. The wood extending from the pith to the sapwood, the cells of which no longer participate in the life processes of the tree. Heartwood may be infiltrated with gums, resins, and other materials that usually make it darker and more decay resistant than sapwood.

Knot. That portion of a branch or limb that has been surrounded by subsequent growth of the wood of the trunk or other portion of the tree. As a knot appears on the sawed surface it is merely a section of the entire knot, its shape depending upon the direction of the cut. Knot diameter is measured as shown. The least dimension is used to determine size of the knot.

Knot Cluster. Three or more knots in a compact, roughly circular group, with the grain between them highly contorted. Two or more knots laterally arranged and without contortion of the fibers between them do not constitute a knot cluster.

Loose Knot. A knot that is not held firmly in place by growth or position and that cannot be relied upon to remain in place.

Sound Knot. A knot that is solid across its face, at least as hard as the surrounding wood, and shows no indication of decay.

Unsound Knot. A knot that, due to decay, is softer than the surrounding wood.

Mineral Streak. An olive to greenish-black or brown discoloration of undetermined cause in hardwoods, particularly hard maples; commonly associated with bird pecks and other injuries; occurs in streaks usually containing accumulations of mineral matter.

Peeling (clean). The removal of all outer bark and at least 80 percent of the inner bark distributed over the surface of the post, pile, or block.

Pith. The small, soft core occurring in the structural center of a tree trunk, branch, twig, or log.

Plugged Hole. Any opening, or defect, which has been filled, or repaired, through the use of wooden plugs, plastic wood, or other methods. Holes resulting from the taking of test cores by an increment borer to check penetration or retention of preservative and filled with tight-fitting pressure treated plugs are not considered as plugged holes for rejection purposes.

Sapwood. The living wood of pale color near the outside of the log. Under most conditions the sapwood is more susceptible to decay than heartwood.

Shake. A separation along the grain, the greater part of which occurs between the rings of annual growth. Shakes are measured at the ends of pieces between lines parallel with the two faces that give the least dimension.

Slope of Grain. Slope of grain is the deviation of the wood fiber from a line parallel to the edges of a piece. The deviation is expressed as a ratio such as a slope of grain of one in eight. Generally, slope of grain is measured over sufficient length and area to be representative of the general slope of the fibers, disregarding local variations.

Split. A lengthwise separation of the wood extending through the piece from one surface to an opposite or to an adjoining surface, due to the tearing apart of wood cells. Splits are measured as the penetration of a split from the end of the piece and parallel to edges of the piece.

Twist. A distortion caused by the turning or winding of the edges of a board so the four corners of any face are no longer in the same plane.

Unsightly Gaps. The term as used in these specifications is interpreted as being any gap, or opening that is more than ⅜ inch at its maximum width and more than 12 inches long.

Wane. Bark, or lack of wood from any cause, on edge or corner of piece.

912.05. Structural Timber and Lumber.

A. **Grade.** Provide structural timber and lumber of the grade required, as determined by the grading and dressing requirements of ASTM D245.

B. **Species.** Use species specifically included in AWPA U1, Section 5, Table UCS U1, for UCS listing UC4C.

C. **Preservative Treatment.** Condition and treat structural timber and lumber in accordance with AWPA U1, Section 6, Commodity Specification A. Refer to Use Category 4A (UC4A) for above ground requirements and Use Category 4C (UC4C) for ground contact requirements.

D. **Preservatives.** Provide preservatives meeting the requirements of AWPA U1, Section 4, "Preservatives for Pressure Treatment Processes," and the relevant P Standards.

912.06. Timber Piles.

A. **Physical Characteristics and Species.** Provide timber piles of southern pine, red pine, jack pine, ponderosa pine, Douglas fir, western larch, lodgepole pine, or red oak. Before applying preservative treatment, ensure timber piles meet the requirements of ASTM D25, "Standard Specifications for Round Timber Piles," except as modified by this subsection.

B. **Dimensions.** Ensure the pile circumference measured under the bark meets the requirements of Table 912-1, except 10 percent of the piles in a shipment lot may have circumferences 2 inches less than the minimum values. Ensure piles do not exceed the 1:2 maximum to minimum diameter ratio measured at the butt of the pile.

Table 912-1 Circumferences and Diameters of Timber Piles						
	3 ft from Butt				At Tip	
	Minimum		Maximum		Minimum	
Length, (ft)	Circum-ference, (in)	Diameter, (in)	Circum-ference, (in)	Diameter, (in)	Circum-ference, (in)	Diameter, (in)
Douglas Fir, Larch, Pine, or Tamarack						
<40	38	12	63	20	25	8
40–50	38	12	63	20	22	7
≥50–70	41	13	63	20	22	7
≥70–90	41	13	63	20	19	6
>90	Dimensions must be as specified in the proposal or on the plans					
Oak and Cypress						
<30	38	12	57	18	25	8
30–40	41	13	63	20	22	7
>40	41	13	63	20	19	6

C. **Sapwood.** Provide piles with a sapwood thickness of at least 1 inch at the butt end.

D. **Straightness.** Use straight piles, as determined by drawing a line from the center of the butt to the center of the tip, and ensuring the line lies within the pile body. Only use piles with a uniform taper from butt to top and without short crooks.

E. **Knots.** Provide piles free of unsound and loose knots. Piles may contain sound knots no greater than 4 inches in diameter or one-third of the shortest pile dimension at the knot location, except for piles used as structural members in exposed work. Ensure piles used as structural members in exposed work do not contain sound knots with diameters greater than one-quarter of the shortest pile dimension at the knot location.

F. **Checks.** Do not use piles with checks wider than ¼ inch or deeper than 2 inches.

G. **Peeling (Shaving).** Piles must meet the requirements for clean peeled posts as specified by subsection 912.07.I.

H. **Preservative Treatment.** Perform preservative treatment of timber piling in accordance with the AWPA Use Category UC4C for foundation, land, and fresh water exposure. Submit certification from the treatment plant stating type, pressure process used, net amount of preservative retained and compliance with relevant standards to the Engineer. Preservative penetration and retention must meet the requirements of AWPA U1 Table 3.0, Use Category 4 (UC4C).

I. **Preservatives.** Provide preservatives for treatment meeting the requirements of AWPA Standard U1 Section 4, “Preservatives for Pressure Treatment Processes,” and the applicable P Standards.

912.07. Timber Posts.

A. **General.** Use posts cut from live timber without bird pecks or insect holes. Saw post ends square.

B. **Species and Grades.** Provide fence posts, guide posts, guard posts, and mailbox posts manufactured from the species specified in Table 912-2.

Table 912-2
Species and Grading Requirements for Posts

Species	Round Posts Grade	Grading Rules Agency (a)
Hardwoods		
Red Oak (Northern Red, Black, Pin Laurel, Cherry-Bark, Scarlet, Water, and Willow Oaks) (b)	ASTM D245	MDOT
Hard Maple (Black & Sugar) and Red Maple		
White Ash		
White-Heartwood Beech		
Yellow Birch		
Softwoods		
Northern White Cedar, Red Pine, and Eastern White Pine (Northern White Pine)	No. 1 or better	NHPMA
Douglas-fir	No. 2 or better	WCLIB, WWPA
Southern Pine Species	No. 2 or better	SPIB

a. NHPMA (Northern Hardwood and Pine Manufacturers Assoc.); WWPA (Western Wood Products Assoc.); WCLIB (West Coast Lumber Inspection Bureau); and SPIB (Southern Pine Inspection Bureau)
b. Southern Red Oak is not permitted.

C. **Marking.** Ensure posts show the grading agency stamp indicating the mill origin, species, and grade.

D. **Dimensions.** Provide 7 foot long line posts with a nominal 4 inch square cross section or a round cross section with a diameter of at least 4½ inches.

Provide 8 foot long end, corner, gate, intersection and intermediate braced posts with a nominal 6 inch square cross section or a round cross section with a diameter of at least 8 inches.

Provide mailbox posts at least 6 feet long with a nominal 4 inch square cross section or a round cross section with a diameter of at least 4 inches.

E. **Dimensional Tolerances.** Provide round posts within +¾ inch and −¼ inch of the required diameter. Ensure posts are equal to the required nominal length ±2 inches. Use the average top

diameter to determine the sizes of posts that are not perfectly round. Provide square posts within −¼ inch of the required cross section.

F. **Decay.** Do not provide posts with butt rot in greater than 5 percent of the butt area. Ensure post tops are sound, except the Engineer may allow one pipe rot no greater than ⅜ inch in diameter in posts with a nominal top size of at least 6 inches.

G. **Knots.** Posts may contain sound knots trimmed flush with the post surface that do not affect the post strength.

H. **Crook or Bow.** Do not provide posts with short crooks, one way sweep greater than 2 inches, and unsightly and exaggerated winding twists.

I. **Surface.** Provide fence posts that are peeled or shaved to remove the outer bark from the entire length. The Engineer will not require shaving to remove the inner bark.
, Completely remove the inner and outer bark from round posts for mailbox posts, guard posts, and guide posts..

J. **Preservative Treatment.** Condition and treat round posts, except northern white cedar, in accordance with AWPA U1, Section 6, Commodity Specification B, Use Category 4B (UC4B). Treat sawn posts as specified in subsection 912.05.C.

K. **Conditioning.** If air seasoned, stack posts in a Department-approved manner until the average moisture content is no greater than 19 percent.

L. **Preservatives.** Provide treatment preservatives meeting the requirements of AWPA U1, Section 4, "Preservatives for Pressure Treatment Processes," and the relevant P Standards.

M. **Results of Treatment.** Refer to Table 912-3 for the minimum preservative penetration and retention, as determined in accordance with AWPA Standards.

Table 912-3 Treatment Results Requirements		
Preservative	**Minimum Retention 0.0 – 0.6 in zone**	**AWPA Standard**
Oil Type	AWPA Commodity Specification B Table 3.1.2, Use category 4B	A 6
Waterborne Type		A 11
Minimum Penetration		
Species	**Heartwood**	**Sapwood**
Hardwoods & Douglas-fir	≥0.3 in	0.6 in or 90%, whichever is greater
Softwoods	—	2.0 in or 90%, whichever is greater

912.08. Sawn Timber Posts and Blocks for Beam Guardrail and Highway Signs.

A. **Species and Grades.** Provide wood posts for guardrail in accordance with Table 912-4; for wood blocks in accordance with Table 912-5; and for sign posts in accordance with Table 912-6. Ensure the grading agency stamp is applied to the middle one-third of each sign post on the wider face.

Table 912-4
Species and Grading Requirements for Sawn Timber Guardrail Posts

Species	Posts & Timber Grade	Grading Rules Agency
Hardwoods		
Red Oak (Northern Red, Black, Pin, Laurel, Cherry-Bark, Scarlet, Water, and Willow Oaks) (a)	Grade GRP	MDOT
Hard Maple (Black & Sugar) and Red Maple		
White Ash		
White-Heartwood Beech		
Yellow Birch		
Hickory (Mockernut, Pignut, Shagbark, and Shellbark Hickories)		
Softwoods		
Douglas-fir, Douglas-fir/Larch	No. 1 or better	WWPA or WCLIB
Southern Pine	No. 1 or better	SPIB
Jack Pine 8 in × 8 in	No. 1 or better	NHPMA
a. Southern Red Oak is not permitted.		

Table 912-5
Species and Grading Requirements for Sawn Timber Guardrail Blocks

Species	Blocks Grade	Grading Rules Agency
Hardwoods		
Red Oak (Northern Red, Black, Pin, Laurel, Cherry-Bark, Scarlet, Water, and Willow Oaks) (a)	Grade GRB	MDOT
Hard Maple (Black & Sugar) and Red Maple		
White Ash		
White-Heartwood Beech		
Yellow Birch		
Hickory (Mockernut, Pignut, Shagback, and Shellbark Hickories)		
Softwoods		
Douglas-fir and Douglas-fir/Larch	No. 2 or better	WCLIB, WWPA
Southern Pine Species	No. 2 or better	SPIB
Jack Pine, Red Pine, and Eastern White Pine (Northern White Pine)	No. 1 or better	NHPMA
a. Southern Red Oak is not permitted.		

Table 912-6 Species and Grading Requirements for Sawed Sign Posts		
Species	**Grade**	**Grading Rules Agency**
4 in × 6 in (nominal) Posts		
Balsam Fir	No. 1 (Joists-Planks)	NELMA
Douglas Fir	No. 1 (Joists-Planks)	WCLIB
Eastern Hemlock	No. 1 (Joists-Planks)	NHPMA
Tamarack (Eastern Larch)	No. 1 (Joists-Planks)	NHPMA
Eastern White Pine	Select Structural (Joists-Planks)	NELMA
Southern Pine	No. 1 (Joists-Planks)	SPIB
6 in × 8 in (nominal) Posts		
Douglas Fir	No. 1 Dense (Posts-Timbers)	WWPA
Southern Pine	No. 1 SR (Stress Rated Timbers)	SPIB
Eastern Hemlock	Select Structural (Posts-Timbers)	NELMA
Tamarack (Eastern Larch)	Select Structural (Posts-Timbers)	NELMA

For guardrails, provide wood posts and blocks with a nominal 6 inch by 8 inch cross section, except for jack pine provide at least No. 1 Grade posts with a nominal 8 inch by 8 inch cross section.

1. **MDOT Grade GRP.** Provide MDOT Grade GRP (guard rail posts) meeting the requirements of this subsection.

   a. **Splits.** Ensure splits are no greater than 3 inches on the bolt hole plane and no greater than 6 inches in other locations.

   b. **Checks.** Ensure single checks are no deeper than 3 inches. Ensure checks opposite each other do not have a total depth greater than 3 inches as measured with a probe no greater than $^{1}/_{16}$ inch thick and $^{1}/_{16}$ inch in diameter.

      Ensure single checks at least ⅜ inch wide, as measured at the widest point, do not extend along more than one-third of the post length.

      Ensure single checks, as measured at the widest point, are no greater than ⅜ inch wide.

   c. **Shakes.** Ensure shakes are no greater than 2 inches in the smallest dimension.

   d. **Splits, Checks, and Shakes.** Ensure splits, checks, or shakes do not appear in combinations that may cause posts to separate into pieces.

   e. **Stains.** Ensure pieces do not contain more than 25 percent stained heartwood, and staining is not caused by decay.

   f. **Slope of Grain.** Ensure slope of grain is no greater than 1:10.

g. **Wane.** Ensure wane occurs on less than one-quarter of any face.

h. **Knots.** Ensure knots are sound and tight. Ensure the sum of the least knot dimensions in 6 inch lengths of posts is less than 5 inches. Ensure grain distortion caused by knot clusters is no greater than 2½ inches. Ensure knots do not exceed 2½ inches in the least dimension.

2. **MDOT Grade GRB.** Provide MDOT Grade GRB guardrail blocks meeting the requirements of this subsection.

a. **Splits.** Ensure splits are no greater than 3 inches on the bolt hole plane and no greater than 5 inches in other locations.

b. **Checks.** Ensure single checks are no greater than 3 inches deep. Ensure checks opposite each other do not have a total depth greater than 3 inches as measured with a probe no greater than $^{1}/_{16}$ inch thick and $^{1}/_{16}$ inch in diameter.

Ensure single checks at least ⅜ inch wide as measured at the widest point do not extend along more than one-third of the post length.

Ensure single checks, as measured at the widest point, are no greater than ⅜ inch wide.

c. **Shakes.** Ensure shakes are no greater than 3 inches in the smallest dimension and do not extend more than one-half of the standard grading length.

d. **Splits, Checks, and Shakes.** Ensure splits, checks, and shakes do not appear in combinations that may cause blocks to separate into pieces.

e. **Stains.** Ensure pieces do not contain more than 25 percent stained heartwood, and staining is not caused by decay.

f. **Wane.** Ensure wane occurs on less than one-third of any face.

g. **Knots.** Ensure grain distortion caused by knot clusters is no greater than 4 inches. Ensure knots do not exceed 4 inches in the least dimension.

B. **General Requirements.**

1. **Decay.** Provide posts and blocks free from decay before treatment.

2. **Crook or Bow.** Ensure crooks or bows are no greater than 1 inch per 10 feet of length.

3. **Dimensional Tolerances.** Provide posts and blocks with the following dimensional tolerances:

a. Cross-section within -½ of the required dimension;

b. Block length within -½ of the required length; and

c. Post length within -2 inches of the required length.

C. **Incising.** Incise posts before treatment as needed to meet penetration and retention requirements. Incising blocks is not required. Ensure the incisor has teeth a nominal ⅞ inch long to make cuts spaced 2½ inches apart lengthwise in rows ¾ inch apart. Ensure alternate rows are staggered by 1¼ inches to provide 60 diamond patterns of incisions per square foot. Ensure the diamonds are 2½ inches long and 1½ inches wide from center to center. The Contractor may incise southern pine with ¾ inch teeth.

As an alternative, the Contractor may incise posts in accordance with the AREMA *Manual for Railway Engineering*, Article 3.6.2.

D. **Inspection Before Treatment.** Inspect air dried or kiln dried material for moisture content as specified in subsection 912.09.E and in accordance with AWPA M2. Test representative pieces. Test at least 5 percent or 50 pieces out of a charge, whichever is less.

E. **Test for Moisture Content.** Test moisture content using an electrical resistance type moisture meter with insulated needles 1½ inches long. Correct readings for species and temperature readings in accordance with meter instructions. Take readings on one surface at mid length. Drive needles to their full length during readings. The Engineer will accept lots with average moisture content no greater than 19 percent. Remove individual pieces with moisture contents greater than 23 percent.

F. **Preservative Treatment.** Treat wood for guardrail posts and sign posts in accordance with AWPA U1, Section 6, Commodity Specification A, Use Category 4B. Treat wood for guardrail blocks in accordance with AWPA U1, Section 6, Commodity Specification A, Use Category 4A.

G. **Preservatives.** Provide preservatives meeting the requirements of AWPA U1, Section 4, "Preservatives for Pressure Treatment Processes," and the relevant P Standards.

H. **Sorting and Spacing.** Provide charges of the same species or species within any one group specified in Table 912-7. Provide material with a similar moisture content and similar form and size.

The Contractor may treat blocks and posts in the same charge after meeting the retention requirements specified in subsection 912.09.K. Use horizontal spacers to separate pieces in the charge to ensure preservative and steam contacts all horizontal surfaces.

Table 912-7 Species Groupings for Treatment in Same Charge Group	
Group	**Species**
A	Southern Pine
B	Douglas-Fir, Balsam Fir, Eastern Hemlock, Tamateck
C	Jack Pine, Red Pine and Eastern White Pine
D	Hardwoods

I. **Conditioning.** Use air seasoning, kiln drying, Boulton drying, vapor drying, steaming, or heating in preservative.

Ensure average moisture content no greater than 19 percent for air seasoned or kiln dried material before treatment.

If steam conditioning, do not exceed the maximum temperature specified in Table 912-8 in less than 1 hour. If applying a vacuum after steaming, ensure the vacuum pressure is at least 22 inches of mercury. If using Chromated Copper Arsenate (CCA), Ammoniacal Copper Arsenate (ACA), or Ammoniacal Copper Zinc Arsenate (ACZA), remove the material from the cylinder and allow it to cool to no greater than 120 °F after steaming and before applying the preservative. When treating douglas fir with pentachlorophenol, do not steam. If treating southern pine, jack pine, and red pine with CCA, ACA or ACZA, use steam only to thaw frozen or ice coated material.

If conditioning material by heating in preservative, ensure the solution covers the material. Refer to Table 912-8 for maximum temperatures. Do not condition by heating in water borne preservatives, including CCA, ACA, and ACZA.

Table 912-8 Conditioning Methods and Temperature Requirements for Method Used					
		Steaming		**Heating in Preservative**	
Species	**Conditioning Methods Allowed**	**Maximum Temp. (°F)**	**Maximum Duration** (h)	**Maximum Temp. (°F)**	**Maximum Duration** (h)
Hard Maple	Air drying only, no steaming	—	—	—	—
Other Hardwoods (a)	(d)	—	—	220	No limit
Southern Pine	(d)	245	17	220	No limit
Eastern White Pine	(d)	240	4½	210	6 (c)
Other Softwoods (b)	(d)	240	6	210	6 (c)
a. Red Oak, White Ash, White-Heartwood Beech, Yellow Birch, Hickory, and Red Maple. b. Jack Pine, Douglas Fir, and Red Pine, Balsam Fir, Eastern Hemlock, Tamarack. c. If using seasoned material, otherwise no limit. d. See Subsection 912.08.I, “Conditioning.”					

J. **Treatment.** Ensure treatment meets the retentions and penetrations specified in subsection 912.08.K and subsection 912.08.L.

Apply pressure in accordance with Table 912-9. Maintain pressure until the required volume of preservative enters the wood.

For pentachlorophenol in Type A hydrocarbon solvent, do not exceed 210 °F during the pressure period. For ACA, do not exceed 150 °F during the pressure period. For CCA, do not exceed 120 °F during the pressure period. For ACZA do not exceed 150 °F during the pressure period.

If treating with pentachlorophenol, the Contractor may apply an expansion bath or a final steaming after completion of the pressure phase of the treatment, as specified in Table 912-9.

Table 912-9
Pressure Requirements by Species

Species	Pressure		Where Preservative is Penetachlorophenol in Type A Hydrocarbon Solvent		
				Final Steaming (a)	
	Minimum (psi)	Maximum (psi)	Expansion Bath Maximum Temp. (°F)	Maximum Temp. (°F)	Maximum Duration (h)
Red Oak	125	250	Not Permitted	240	1
Other Hardwoods	125	200	Not Permitted	240	1
Jack Pine, Red Pine	75	175	220	240	2
Southern Pine	75	200	220	240	2
Douglas Fir	50	150	220	240	2
Balsam Fir					
Eastern Hemlock					
Tamarack					
Eastern White Pine	50	135	220	240	1

a. If using seasoned material, the Contractor may post-steam at 225 °F for no greater than 15 h.

K. **Retention.** Use chemical assay with samples taken after treatment as specified in subsection 912.09.M, and refer to Table 912-10 to determine the minimum retention for the outer 0.6 inch of guardrail posts, blocks, and sign posts using the AWPA Standards specified. If treating blocks with posts, determine charge retention by assay of borings from posts.

Table 912-10 Minimum Retention Requirements				
Preservative	**Minimum Retention, (pcf)**			**AWPA Standard**
	Guardrail Posts	**Sign Posts**	**Blocks**	
Pentachlorophenol	0.60	0.50	0.40	A6
CCA, ACZA	0.60	0.50	0.40	A11
ACQ (a)	0.60	Not Allowed	0.40	A11
CA-B (a)	0.31	Not Allowed	0.21	A11
CA-A (a)	0.31	Not Allowed	0.15	A11
Other Waterborne preservatives	AWPA Commodity Specification A, Table 3.0, Use Category 4B	Not Allowed	AWPA Commodity Specification A, Table 3.0, Use Category 4A	A11
a. Non-Metallic washers or spacers are required for timber and lumber treated with ACQ or CA placed in direct contact with aluminum. Do not use with sign posts.				

L. **Penetration.** Refer to Table 912-11 for heartwood and sapwood penetration requirements. Take samples to determine penetration after treatment as specified in subsection 912.09.M.

Table 912-11 Penetration Requirements-Posts and Blocks		
	Minimum Penetration	
All Species Allowed (a)	**Heartwood**	**Sapwood**
Guardrail Posts and Blocks	0.3 in	0.6 in or 90%, whichever is greater
Sign Posts	0.5 in	0.6 in or 90%, whichever is greater
a. For Red Oak, penetrate 65 percent of the total annual rings. If red oak cannot be penetrated as required, the Contractor may properly condition wood to refusal.		

M. **Inspection After Treatment.** After treatment, examine the charge for cleanliness, mechanical damage, treatment damage such as severe checking, splitting, or honeycombing, and for untreated areas resulting from air pockets, floating material, or insufficient preservative height. Remove defective material before shipment.

The Department will sample material in accordance with MTM 713, and test for preservative retention and penetration.

N. **Branding.** Permanently and clearly burn brand posts and blocks on one wide face. On guardrail posts, ensure the brand is within 1 foot of the post top. On sign posts, ensure the brand is within the middle one-third of the post. Ensure the brand shows the following information in accordance with AWPA M 6:

1. Treater ID,
2. Plant designation,
3. Year of treatment (the month may be included),
4. Species or group (code designation specified in Table 912-12),
5. Preservative type, and
6. Retention type.

Table 912-12 Group Coding as an Alternate to Species Coding	
Group	**Code** (a)
Hardwoods	MH
Jack Pine	J
Other Softwoods	MS
Southern Pine	SP
Douglas Fir	DF
a. Species designated in Table 912-4, Table 912-5, and Table 912-6.	

O. **Conformance.** Ensure the treatment plant supplying the material provides a certificate indicating the species, grade, preservative type, retention, year, and name of treater.

P. **Degradation After Treatment.** The Engineer will reject guardrail posts or blocks that develop at least one of the following before installation:

1. Single checks at least 3 inches deep or checks opposite each other with a total depth greater than 3 inches as measured with a probe no greater than $^{1}/_{16}$ inch thick;
2. Single checks at least ¼ inch wide as measured at the widest point, and extending along more than one-third of the length of the post or block;
3. Single checks greater than ⅜ inch wide as measured at the widest point;
4. Splits in the bolt hole plane greater than 3 inches long;
5. Crooks or bows greater than 1 inch per 10 foot length;
6. Twists; or
7. A combination of checks, splits, or shakes that may cause the post or block to separate into pieces.

Q. **Guardrail Offset Blocks.** The Contractor may select alternate materials for guardrail offset blocks from the Qualified Products List.

912.09. Timber for Rustic Construction.

A. **Species and Grade.** Provide sound unfinished eastern or northern white pine, red pine, ponderosa pine, douglas fir, northern white cedar, or southern pine for logs, posts, timbers, lumber and split rails for rustic construction.

Provide material free of decay, with the bark removed. The Contractor may use salvaged rails from existing rail fences if the salvaged rails are sound and uniform in straightness and size.

B. **Shape and Dimensions.** Provide logs and posts with an average diameter, at the small end, of no less than the required diameter -¼ inch.

C. **Preservative Treatment.** Condition and pressure treat wood for rustic construction in accordance with AWPA U1, Section 6, Commodity Specification B, Use Category 4A (UC4A) for above ground or Use Category 4B (UC4B) for ground contact.

D. **Preservatives.** Provide preservatives, meeting the requirements of AWPA U1 Section 4, "Preservatives for Pressure Treatment Processes," and the relevant P Standards.

912.10. Timber and Lumber for Human Conveyances.

A. **Preservative Treatment.** Provide preservative treatment for timber and lumber on areas where frequent human contact may occur, including deck surfaces, walkways, handrails, steps, railing and fence posts, tables, and benches, with Ammoniacal Copper Quat (ACQ) or Copper Azole (CA), in accordance with AWPA U1-04. Ensure the ACQ preservative meets requirements of AWPA P5. Do not use Chromium Copper Arsenate (CCA) or other arsenic based preservatives.

Ensure the lumber and timber meets the preservative retention and penetration requirements of AWPA U1-04, Table 3.0 and Table 4.0, for UC4A, for above ground and UC4B, for ground contact.

For UC4A, ensure a retention of at least 0.40. For UC4B, ensure a retention of at least 0.60. Do not use wood species cited in Table 3.0 as "NR (Not Recommended) for ACQ preservative."

B. **Results of Treatment.** Evaluate treatment results, including preservative analysis and penetration and retention, by testing chemical assay, in accordance with AWPA A11. Process and treat wood in accordance with AWPA T1-04. Ensure the preservative temperature during the pressure period does not exceed 150 °F.

C. **Fasteners.** For wood treated with ACQ preservative, use stainless steel fasteners or hot dipped galvanized fasteners in accordance with ASTM A653/A653M, batch or post-dipped process, with a coating thickness of at least 1.85 ounces of zinc per square foot of surface area (G185). Do not mix fastener types. Ensure aluminum does not directly contact ACQ treated wood. Use non-metallic spacers if contact with aluminum may occur. Do not use aluminum fasteners.

Section 913. MASONRY UNITS

913.01. General Requirements. Clay brick, concrete brick, concrete block, salvaged paving brick, precast reinforced concrete units, and structural tile for masonry structures must meet the requirements of this section.

913.02. Testing. Testing will be in accordance with the specified ASTM or AASHTO method, as modified by this section.

913.03. Brick.

A. **Brick Dimensions.** Brick must meet the following nominal size limitations:

1. Depth – 2 inches to 2½ inches,
2. Width – 3½ inches to 3¾ inches, and
3. Length – 7½ inches to 8 inches.

Brick for a single structure must be of one nominal size and must not vary from the manufacturer's specified standard dimensions by more than ±⅛ inch in any dimension. However, clay brick may vary in length by ±¼ inch and up to 2 percent of the contract's clay brick quantity may exceed the dimensional tolerances.

B. **Clay Brick.** Clay brick, to construct manholes, catch basins, and similar structures, must meet the requirements of ASTM C32, for Grade MS.

Recessed or cored brick is acceptable.

Salvaged paving brick meeting the requirements of this section is acceptable.

C. **Concrete Brick.** Concrete brick must meet the requirements of ASTM C55 for concrete building brick.

Recessed or cored brick is acceptable.

D. **Sand-Lime Brick.** Sand lime brick for masonry structures must meet the requirements of ASTM C73, for Grade SW and the following 5-hour boiling test water absorption requirements:

1. Average of 5 bricks – 18% maximum; and
2. Individual brick – 20% maximum.

913.04. Concrete Masonry Units for Structures Other than Drainage Structures.

A. **Load-Bearing Units.** Hollow, load-bearing, concrete masonry units must meet the requirements of ASTM C90, Normal Weight.

B. **Non-Load-Bearing Units.** Hollow, non-load bearing, concrete masonry units must meet the requirements of ASTM C129, Normal Weight.

913.05. Concrete Block for Drainage Structures. Concrete blocks for manholes, catch basins, and inlets must meet the requirements of ASTM C139, except as modified by this subsection

A. **Shape.** Block must be solid with parallel inside and outside surfaces, curved to the required radii and must have a groove or other Department-approved joint at the ends.

B. **Size.** The block manufacturer will select the nominal block dimensions for length and height. Blocks must have a nominal width of 6 inches, 8 inches, or 12 inches, ±3 percent, as shown on the plans.

Where standard plans call for 12-inch thick drainage structure walls, the Contractor may use two 6-inch wide blocks to meet the required width. Blocks must be designed for length so that only full or half length blocks are required to lay the circular wall of any one course.

The shape of blocks for use in the cones or tops of manholes or other structures must allow for constructing the structure as shown on the plans with inside and outside joints not to exceed ¼ inch in thickness.

913.06. Precast Reinforced Concrete Units for Drainage Structures. Circular precast concrete units with circular reinforcement for tops, risers, and sump bases for manholes, catch basins, and inlets must meet the requirements of AASHTO M199 and the following additions and exceptions:

A. Units must have the internal diameter shown on the plans and must accept standard covers.

B. The joint with the vertical wall of the structure must be the same design as the joints in the circular pipe sections to allow a uniform bearing on the full wall thickness of the pipe.

C. Construct openings for pipe inlets or outlets in the riser sections of drainage structures by blocking out the openings when casting the sections, by scribing the openings in the green concrete and removing the green concrete from the openings, or by drilling out the openings from cured concrete with a water-cooled diamond bit.

D. Openings in the riser sections must be 3 inches larger than the outside diameter of the inlet or outlet pipe. The interior spacing between openings in a riser section must be at least 12 inches.

E. Obtain the Engineer's approval for the design of units for structure tops and for design of sump risers with base units. Request approval for sump riser and base units used together.

913.07. Precast Concrete Bases for Drainage Structures. Precast concrete bases for drainage structures for sewers less than 48 inches in diameter must be cast with Grade 3000 or Grade 4000 concrete.

913.08. Structural Tile.

A. **Load-Bearing Units.** Structural clay load bearing tile must meet the requirements of ASTM C34, for Grade LBX.

B. **Non-Load-Bearing Units.** Structural clay non-load-bearing tile must meet the requirements of ASTM C56.

913.09. Precast Concrete Slope Paving Blocks. Blocks must have a compressive strength of at least 2,500 psi for an average of three units with no individual block having a compressive strength of less than 2,000 psi. The average water absorption of three units must be no greater than 10 pounds per cubic foot.

The Department will sample and test precast concrete slope paving blocks in accordance with ASTM C140/C140M with the following exceptions:

A. Test 4 inch by 4 inch compression test specimens sawn from precast concrete slope paving block units. The specimens will be tested with the load applied in the direction of the thickness of the unit.

B. Determine water absorption using half of the unit used for the compression test specimen.

Section 914. JOINT AND WATERPROOFING MATERIALS

914.01. General Requirements. Joint and waterproofing material for use in concrete construction must meet the requirements of this section.

914.02. Testing. Steel joint material testing must be in accordance with ASTM E8/E8M or ASTM A370 and the ASTM specifications applicable to the specific material.

Other joint and waterproofing material testing must be in accordance with the specified ASTM, AASHTO or Department methods, as modified by this section.

914.03. Joint Filler for Concrete Construction. Cut joint filler into the shape and to the dimensions shown on the plans. Joint filler must not deform or break due to twisting, bending, or handling when exposed to atmospheric conditions. For concrete pavements, punch holes in the fiber joint filler for load transfer bars in new concrete pavements, as shown on the plans.

A. **Fiber Joint Filler.** Fiber joint filler must meet the requirements of ASTM D1751.

B. **Recycled Rubber Joint Filler.** Recycled rubber joint filler must meet the requirements of ASTM D1751 except the minimum asphalt content does not apply.

C. **Closed-Cell Polypropylene Foam**. Semi-rigid, closed-cell polypropylene foam joint filler must meet the requirements of ASTM D8139.

914.04. Joint and Crack Sealants for Construction.

A. **Hot-Pour Joint and Crack Sealant.** Hot poured joint and crack sealant must meet the requirements of the QPL for Hot-Poured, Extra Low Modulus, Joint and Crack Sealant.

Material containers must be legibly marked with a non-fading, weather resistant ink or paint. Include the manufacturer's name or trade name, batch number, recommended pouring temperature, and the maximum safe heating temperature on the label.

B. **Backer Rod for Use with Hot-Poured Joint Sealant.** Backer rod for use with a hot poured joint sealant must be solid, round, heat resistant, closed-cell, cross-linked polyethylene foam meeting the requirements of ASTM D5249, for Type I.

914.05. Joint Spall Repair Materials. Select joint spall repair material according to the contract.

914.06. Epoxy Resin Adhesive. Epoxy resin adhesive must be capable of being injected into, and flow along, a crack 0.005 inches wide. Select epoxy resin adhesive from the Qualified Products List.

Use a fast setting grout or a fast set temporary seal as recommended by the epoxy resin adhesive manufacturer.

914.07. Dowel Bars for Transverse Expansion and Contraction Joints. Dowel bars must meet the requirements of ASTM A1078/A1078M.

Provide dowel baskets from a Department-approved source. Secure the dowel bars into the baskets by welding or other mechanical method so that the dowels will maintain alignment during and after concrete placement.

The ends of dowel bars for expansion and contraction joints must be saw cut or sheared, and free of burrs. If dowel bars are sheared, ensure the ends remain round and do not deform. The Engineer will reject dowel bars that are not free from burrs, deformation, or other surface defects. Protect dowel bars during handling and storage according to ASTM A1078/A1078M.

A. **Coatings for Dowel Bars.** If required, provide dowel bars coated with an epoxy powder coating meeting the requirements of ASTM A1078/A1078M, Type 2 coating. The epoxy powder must be pigmented either purple or gray.

The Engineer may sample and test dowel bars for average coating thickness, and check for chips, cracks, or other damage to the coating, and for the presence of a bond breaker, if required, before installation in the concrete construction. The Engineer will reject dowels with coatings not meeting the thickness requirements, or dowels with coating damage.

Epoxy coated dowel bars must have an average coating thickness not less than 0.010 inch, nor more than 0.014 inches on any bar, with individual determinations on a single bar within 0.004 inches of the average. Coating is not required on the end faces of the bars and on the cylindrical surface within 3 inches of the end fixed in the supporting basket by welding or other mechanical means.

To prevent bonding to concrete, epoxy coated dowels must be coated with an asphalt material meeting the requirements of MC 70 or RC 250, as specified in subsection 904.03.B; or an alternate bond release agent selected from the Qualified Products List. Bond release agents must provide a pull out shear bond stress of the dowel bar no greater than 60 psi for initial and final movement of the dowel from the concrete specimen.

The Contractor or supplier may apply asphaltic coatings to the dowel bar and the dowel basket assembly. The manufacturer must apply the alternate bond release agents to the dowel bar and the dowel basket assembly.

B. **Dowel Bar Expansion Caps.** Dowel bars for expansion joints must include metal or plastic expansion caps as shown on the plans and approved by the Engineer. Expansion caps must be sized to provide a slip fit onto the coated bar.

Expansion caps must have a uniform diameter for a length of at least 4 inches and must include a stop to ensure the end of the cap remains at least 1 inch away from the end of the dowel bar during concrete placement. Fabricate metal expansion caps from at least 28 gauge sheet steel, and close at the sides and end by crimping. Plastic expansion caps must be one piece, with a uniform thickness of at least 1/16 inch, entirely closed on the end.

914.08. Devices for Transverse End-of-Pour Joints. Use straight steel tie bar devices for end of pour joints.

Straight tie bars for end-of-pour joints must consist of bars of the diameter and length shown on the plans meeting the requirements of ASTM A615/A615M, ASTM A706/A706M, or ASTM A996/A996M (Type R or Type A). Epoxy coat straight tie bars as specified in subsection 905.03.C, except the application of the epoxy coating within 4 inches of each end of the tie bar, or repair of damage to the coating within 4 inches of each end of the bar is not required.

914.09. Lane Ties for Longitudinal Pavement Joints.

A. **Straight Tie Bars.** Straight tie bars for longitudinal pavement joints must consist of bars of the diameter and length shown on the plans meeting the requirements of ASTM A615/A615M, ASTM A706/A706M, or ASTM A996/A996M (Type R or Type A). Epoxy coat straight tie bars as specified in subsection 905.03.C, except the epoxy coating within 4 inches of each end of the tie bar, or repair of damage to the coating within 4 inches of each end of the bar is not required.

B. **Bent Tie Bars for Bulkhead Joints.** Bent tie bars for bulkhead joints must consist of bars of the diameter and length shown on the plans. The tie bars must have a yield strength of at least 40,000 psi and be capable of withstanding bending to a 90° angle, re-straightening, and then withstanding the pull out test requirements specified in subsection 602.03.F.

Epoxy coat bent tie bars as specified in subsection 905.03.C, except the application of the epoxy coating within 4 inches of each end of the tie bar, or repair of damage to the coating within 4 inches of each end of the bar is not required.

914.10. Structure Expansion Anchors and Bolts. Select expansion anchors from the Qualified Products List in the sizes and shapes shown on the plans. Bolts for flush type anchors must meet the requirements of ASTM A307, for Grade A.

914.11. Preformed Waterproofing Membranes and Joint Waterproofing. Select preformed waterproofing fabric system, including the manufacturer's recommended primer, from the Qualified Products List.

914.12. Elastomeric Bearings and Pads.

A. **Bearings.** Elastomeric bearings must meet the requirements of AASHTO LRFD Bridge Construction Specifications, Subsection 18.2, "Elastomeric Bearings", for 100 percent virgin

polychloroprene (neoprene) or polyisoprene (natural rubber) bearings and must be classified as being of low temperature Grade 4 or 5.

Laminated bearings must have a shear modulus of 100 psi ±15 psi. Plain bearings must have a shear modulus of 200 psi ±30 psi. Rolled steel sheet laminates must meet the requirements of ASTM A36/A36M or ASTM A1011/A1011M, Grade 36, Grade 40, or Grade 50. Blast-clean the surfaces of the laminates where elastomers are to be bonded.

Elastomeric bearings must be tested and accepted in accordance with Section 8 of AASHTO M251, except the definition of a lot specified in Subsection 8.2 of AASHTO M251 is revised as follows: Sampling, testing, and acceptance consideration will be made on a lot basis. A lot of bearings must be considered to be a group of bearings that are manufactured over a 4 month period from the same elastomer recipe, cured under the same conditions, and type (plain, fabric laminated, or steel-laminated).

B. **Leveling Pads.** Elastomeric leveling pads (1/8 inch thick or as specified in the contract) must meet the requirements of AASHTO LRFD Bridge Construction Specifications, Subsection 18.2, "Elastomeric Bearings", for 100 percent virgin polychloroprene (neoprene) or polyisoprene (natural rubber) bearings and must be classified as being of low-temperature Grade 3. Leveling pads must be plain elastomer and have a hardness between 50 and 70 on the Shore A scale. Provide certification to the Engineer that elastomeric leveling pads conform to this subsection.

Elastomeric leveling pads must be tested and accepted in accordance with Appendix X1 of AASHTO M251, except a lot is defined to be material that is manufactured from the same elastomer recipe and cured under the same conditions and tested no less than once per year.

914.13. Non-Metallic Washers. Washers used as spacers between pin plates and link plates must be polyethylene, high density, non-metallic washers meeting the requirements of ASTM D4976, Group 2, Class 4, Grade 4.

Section 915. BRIDGE COATING SYSTEMS

915.01. General Requirements. Select a complete coating system from the Qualified Products List for each structure. Use the same coating system for all coating repairs to the structure including warranty work. The system must consist of a tinted organic zinc-rich primer, a white intermediate coat, and a urethane top coat matching the AMS-STD-595, Colors Used in Government Procurement color number shown on the plans. For faying surfaces of slip critical bolted connections, use a zinc-rich primer meeting the requirements for Class B slip coefficient.

Before coating, provide the Engineer with the product data sheets showing mixing and thinning directions, and the manufacturer recommended spray nozzles and pressures for each product. Provide the Engineer with documentation stating the date of manufacture for the coating product components.

Use spray equipment to apply the coating. The coating products and the thinners must arrive at the project in new, unopened containers and remain unopened until required for use. Coating containers must be labeled with the manufacturer's name, product name, batch number, and date of manufacture; in addition the top coat label must include the AMS-STD-595 color number. The label information must be legible.

915.02. Mixing the Coating. Using a high shear mixer, mix the coating in accordance with the manufacturer's recommendations, to a homogenous consistency. Do not use paddle mixers or paint shakers. Strain the primer after mixing except where spray equipment is provided with strainers. Strainers must be sized to remove undesirable material but not to remove pigment. Follow coating manufacturer's recommendations for sweat-in-time/induction-time before applying coating. Continuously agitate the primer until application is complete.

915.03. Thinning the Coating. Do not thin the coating, unless otherwise recommended by the coating manufacturer. For thinning the coating, provide thinner(s) recommended by the coating manufacturer. Store thinner(s) with other coatings in accordance with manufacturer's recommendations. Thin coatings in accordance with manufacturer's recommendations. Do not exceed the manufacturer's recommended thinning limits.

915.04. Conditions for Coating. Apply coatings under the conditions specified by this subsection.

A. **Temperature.** Do not apply coatings if air, coating material or steel temperature is greater than 100 °F, or if the air, coating material or steel temperature is less than 5 °F higher than the dew point. Apply the primer and intermediate coats, if air, coating material, and steel temperatures meet or exceed 50 °F. Apply the top coat if air, coating material, and steel temperatures meet or exceed 40 °F. Follow the coating manufacturer's recommendations for minimum and maximum temperature, if more stringent. Unless the manufacturer recommends a longer recoat time, maintain the specified minimum air and steel temperatures between coats for 24 hours in the field, or for 16 hours in the fabrication shop.

B. **Humidity.** Do not apply coating if the relative humidity exceeds 90 percent, or if temperature and humidity conditions cause moisture to condense on the surfaces requiring coating. Use a psychrometer to measure the humidity. Follow the coating manufacturer's recommendations for minimum and maximum humidity, if more stringent.

C. **Heating.** If heating is required, heaters must maintain air and steel temperatures from 50 °F to 100 °F without discharging oils or other pollutants into the enclosure.

D. **Storage and Shelf Life of Coating.** Store the coating materials in original unopened containers in weathertight areas where the temperature is maintained between 40 °F to 100 °F unless otherwise recommended in writing by the coating manufacturer. Use coating within the stated shelf life indicated for each component of the coating on its technical/product data sheets.

Section 916. EROSION AND SEDIMENTATION CONTROL MATERIALS

916.01. Stone Used For Erosion and Sedimentation Control. Provide cobblestone, coarse aggregate 3×1, and riprap for erosion and sedimentation control on slopes, in ditches, and to construct erosion control devices, including check dams. Furnish natural stone that is sound, non-stratified, durable rock. Unless otherwise specified and not prohibited by permit, the Contractor may use sound pieces of broken concrete free of protruding reinforcement. Do not use crushed Hot Mix Asphalt (HMA) pavement or broken brick as erosion and sedimentation control material.

A. **Cobblestone.** Furnish cobblestone that consists of rounded or semi-rounded rock fragments with an average dimension from 3 inches to 10 inches.

B. **Coarse Aggregate 3x1.** Furnish coarse aggregate 3×1 that meets the requirements of commercially graded material with particle sizes from ¾ inch to 3 inches.

C. **Riprap.** Furnish riprap that is natural stone, solid precast concrete blocks of Grade 3000 concrete, or sound pieces of broken concrete. Riprap must not contain soil. Randomly score the face of the precast concrete blocks to provide plane of weakness joints in sections with areas from 4 square feet to 9 square feet. Lifting lugs, cast into concrete blocks, must not project above the finished concrete surface.

The Department classifies riprap as plain or heavy, based on the horizontal cross section dimensions, (the "footprint" dimension) and the in place thickness of the individual pieces.

1. **Plain Riprap.** Provide natural stone and broken concrete with footprint dimensions ranging from 8 inches to 16 inches and an in place thickness of at least 16 inches. The Contractor may use smaller pieces to fill spaces for better slope protection.

   Provide precast concrete block at least 6 inches thick with a surface area no greater than 15 square feet.

2. **Heavy Riprap.** The smallest footprint dimension for natural stone and broken concrete must be at least 16 inches. The maximum to minimum dimension ratio must be no greater than 3:1. The in-place thickness must be at least 36 inches.

   Provide precast concrete block at least 16 inches thick with a surface area no greater than 20 square feet.

D. **Requirements for Specific Erosion and Sedimentation Control Applications.**

1. **Checkdams.** Construct checkdams for ditches with grades less than 2 percent using cobblestone or broken concrete ranging from 2 inches to 4 inches in size. Construct

checkdams for ditches with grades 2 percent or greater using cobblestone or broken concrete ranging from 3 inches to 10 inches in size.

2. **Stone Filled Bags.** Furnish coarse aggregate 6A.

3. **Sand Filled Bags.** Furnish Class II granular material.

4. **Aggregate Cover.** Furnish dense-graded aggregate 21AA, coarse aggregate 6A, or coarse aggregate 3×1 produced natural aggregate, iron blast furnace slag, reverberatory furnace slag, or crushed portland cement concrete.

5. **Gravel Access Approach.** Furnish coarse aggregate 3×1, or as approved by the Engineer. Produced from natural aggregate, iron blast furnace slag, reverberatory furnace slag, or crushed portland cement concrete.

916.02. Silt Fence. Geotextile for erosion control silt fence must meet the requirements of subsection 910.04.

Attach geotextile to machine-pointed, No. 2 common grade hardwood posts with at least five staples through wood lath at least ⅜ inch thick and 2.0 feet long. Maximum post spacing is 6½ feet.

Furnish posts at least 36 inches long with a cross sectional area of at least 2¼ square inches, and a smallest dimension of 1½ inches.

Identify the fabricator with at least two permanent markings or affixed labels on each assembled roll of silt fence.

916.03. Temporary Plastic Sheet or Geotextile Cover. Mend or patch torn or punctured plastic sheets or geotextile cover with additional material of the same quality.

A. **Sheeting Material.** Furnish plastic sheet at least 6.0 mils thick with an ultra violet ray inhibitor, or polyvinyl chloride (PVC) at least 10 mils thick. Use PVC material instead of plastic sheet from November 15 to April 1, or if expecting freezing conditions. Store and handle plastic sheet and PVC material in accordance with the manufacturer's recommendations. Do not expose sheeting material to heat or direct sunlight, causing diminished strength or toughness.

B. **Geotextile Cover.** Geotextile cover must meet the requirements of subsection 910.03.A for geotextile blanket.

916.04. Inlet Protection Fabric Drop. Furnish geotextile silt fence fabric meeting the requirements of subsection 916.02 or geotextile blanket meeting the requirements of subsection 910.03.A. Furnish 34R or 6A for gravel filter berm.

916.05. Inlet Protection Geotextile and Stone and Drop Inlet Sediment Trap. Furnish geotextile blanket meeting the requirements of subsection 910.03.A. Furnish 34R or 6A.

916.06. Sand Fence and Dune Stabilization. Furnish high-density polyethylene mesh fabric with a design opening of ½ inch to 1 inch. Minimum sand fence height is 4 feet.

916.07. Turbidity Curtain. Deliver turbidity curtain pre-assembled including the geosynthetic fabric, connection, and securing mechanisms, flotation devices, stakes, and ballast chain.

A. **Geosynthetic.** Provide geosynthetic for turbidity curtain meeting the minimum physical requirements for stabilization geotextile, except permittivity must be no greater than 0.2 $second^{-1}$ as specified by ASTM D4491/D4491M, and trapezoidal tear strength must be least 50 pounds, in accordance with ASTM D4533/D4533M.

The Contractor may use polymer-impregnated geosynthetics in lieu of meeting permittivity and opening size requirements.

Hemmed pockets to accommodate flotation devices and bottom weights must be sewn or heat bonded. Panel ends must include metal grommets through a reinforced hem. Tie connections between panels with synthetic or wire rope to prevent water flow through the joint.

B. **Flotation.** Furnish closed cell polystyrene flotation devices. Determine the required buoyancy based on site conditions. Flotation devices must ensure adequate freeboard to prevent overtopping.

C. **Stakes.** If using stakes to maintain curtain alignment, provide hardwood or steel stakes of lengths and cross sections capable of supporting the curtain. The Contractor may use external supports with embedment depths greater than 1½ feet. Maximum stake spacing is 6½ feet.

D. **Hardware.** Hardware, including stakes, ballast chain, connection bolts, reinforcement plates, and tension cables must be galvanized, stainless steel, or aluminum, and corrosion resistant. The mass of the ballast chain must be at least 0.7 pounds per foot and be capable of maintaining the geosynthetic in a vertical position.

Section 917. TURF AND LANDSCAPING MATERIALS

917.01. General Requirements. Nursery stock, seed, sod, mulching material, and chemical fertilizer nutrients must meet the requirements of this section. Provide documentation of inspection for plant diseases and insect infestation in accordance with State and Federal laws.

917.02. Testing. The Engineer will require visual inspection or other acceptance tests of landscaping material as specified in this section or the Materials Quality Assurance Manual.

917.03. Nursery Stock. Nursery stock must come from nurseries located in Zone 4 or Zone 5 of the 2012 USDA Hardiness Zone Map for landscaping in Michigan's Lower Peninsula.

Nursery stock for landscaping in Michigan's Upper Peninsula must come from nurseries located in Zone 3 or Zone 4.

Nurseries located in Zone 6 of the Upper Great Lakes Region will be allowed as follows:

1. Located at or north of latitude 40 degrees North.
2. Zone 6b will only include nurseries located in counties that border the Great Lakes.
3. Zone 6 plants will not be accepted for use in the Upper Peninsula nor in the Lower Peninsula counties north of US-10 except for those counties bordering Lake Michigan.

Nursery stock must meet the requirements of ANSI Z 60.1.

Nursery stock must be true to the type and name specified by the *American Joint Committee on Horticultural Nomenclature*, "Standardized Plant Names." Label each plant type with the size, species, and variety. Include the common and scientific names on the label. Provide first-class quality stock with well-developed branch systems and vigorous, healthy root systems. Ensure uniform and straight tree trunks. The Department will reject nursery stock grown in sandy soils, or any damaged, diseased, under developed or infected plant material. Provide trees, ornamentals, and shrubs as noted on the plans.

Notify the Engineer a minimum of 24 hours before stock delivery. Provide an invoice showing plant sizes, species, and varieties for each shipment. The Engineer will not accept plants until the stock is delivered and inspected at the project.

The Engineer may examine plants at the nursery by removing soil from the root systems of balled or container grown plants, or digging in the nursery row. The Department will not pay for plants that fail the Engineer's inspection.

A. **Deciduous Shade Trees.** Deciduous shade trees must be straight and symmetrical with a persistent, central main leader. The crown must be in proportion to the total height of the tree.

Clumps must have at least two stems originating from a common base at the groundline.

B. **Small Trees, Ornamentals, and Shrubs.** Small trees, ornamentals, and shrubs must be well-formed with a crown typical of each species or variety. Pruning, shearing or sculpting plants to meet the sizes shown on the plans is not allowed.

C. **Evergreen Trees.** Evergreen trees must be typical of the species and not sheared, or color treated. Do not use evergreen trees grown for Christmas trees. Antitranspirant protection for evergreen trees is allowed.

D. **Vines, Ground Cover and Herbaceous Ornamental Plants.** Plants must be in individual containers, at least 1 year old, grown in pots long enough to ensure root growth capable of holding soil in place and retain the container shape when removed from the pot. Vines must have at least four runners 1½ feet long. Leaf and stem structure of ground cover plants must be proportional to the root systems and typical of species or variety. Provide herbaceous plants in a heathy and vigorous growing condition.

917.05. Balling Material. Use untreated burlap as balling material. Do not use synthetic balling materials such as nylon or plastic.

917.06. Bracing and Guying Materials.

A. **Wire.** For trees less than 4 inches in diameter, provide No. 11 galvanized steel guy wire. For trees with a diameter greater than 4 inches, provide No. 9 galvanized steel guy wire. Provide new wire free of bends and kinks.

B. **Hose.** Provide ¾ inch reinforced rubber garden hose or steam hose.

C. **Stakes.** Provide green metal T-section posts without anchor plates for bracing trees. For shade trees, minimum post length is 8 feet. For evergreen trees, minimum post length is 6 feet.

Provide nominal 2 inch by 4 inch stock stakes 24 inches long for guying plants. Stakes must be beveled on two or four sides to provide a point on one end.

917.07. Topsoil. The Engineer will review the topsoil testing report to determine if it meets the organic matter, pH, gradation and nutrient levels as stated in table 917-1. Ensure topsoil is contamination free and clean at the source prior to transport to the project site. Obtain the Engineer's approval of salvaged topsoil prior to use. Topsoil must meet the following requirements:

Table 917-1
Topsoil Requirements

Requirement	Loam	Sandy Loam	Silty Loam	Clay Loam	Test Method
Passing ¾ inch sieve	100%	100%	100%	100%	ASTM D6913

Passing No.4 sieve	>85%	>95%	>90%	>90%	ASTM D6913
Clay	10-30%	0-20%	0-25%	25-40%	ASTM D6913
Silt	30-50%	0-30%	50-90%	15-55%	ASTM D6913
Sand	25-65%	45-85%	0-50%	20-50%	ASTM D6913
Organic Matter	3-10%	3-10%	3-10%	3-10%	ASTM D2974
pH	5.5-7.5	5.5-7.5	5.5-7.5	5.5-7.5	ASTM G51

1. Testing Reports. Reports must contain at a minimum the following tests and the recommendation from the laboratory for amending the soil.

A. Mechanical gradation (Particle Size Analysis);
B. Sand/Silt/clay content determined by Hydrometer Test of soil passing the #200 sieve;
C. Organic matter determined by an Ash Burn Test or Walkley/Black Test; and
D. Chemical analysis for Nitrate Nitrogen, Ammonium Nitrogen, Phosphorus, Potassium, Calcium, Aluminum, lime requirements, and acidity (pH).

917.08. Compost. The Engineer will review the compost test results to determine if it meets U.S. Composting Council's requirements. The Engineer will also visually inspect and approve the compost at the composting site for physical contaminants.

Compost must be mature, stabilized, humus like, dark brown or black compost derived from the aerobic decomposition of yard clippings or other compostable materials as defined in Part 115, Solid Waste Management, MCL 324.11501 et seq. and federal laws. Compost must be certified through the U.S. Composting Council's Seal of Testing Assurance Program and meet the following requirements:

A. Must be capable of supporting plant growth;
B. Must be free of objectionable odor, plastic, glass, metal, or other physical contaminants;
C. Must not contain viable weed seeds, or other plant parts capable of reproducing; the exception is for airborne weed species; and
D. Must not produce visible free water or dust during handling.

917.09. Peat Moss. Peat moss must consist of finely shredded sphagnum or fibrous peat moss of a Department-approved commercial grade, free of woody substance.

917.10. Fertilizers. Provide standard, commercial, packaged, or bulk product fertilizers in granular or liquid form. Each container of packaged fertilizer must be marked with the content analysis showing the minimum percentages of total nitrogen, available phosphoric acid, and soluble potash. If providing bulk fertilizer, provide an invoice with each shipment indicating the minimum percentages of total nitrogen, available phosphoric acid, and soluble potash.

A. **Landscape Fertilizers.**

1. **Planting Fertilizers.** For mixing with peat moss and topsoil, provide ready-mixed granular fertilizer containing equal amounts of phosphorus and potassium by weight. Each cubic yard of prepared soil must contain chemical fertilizer to provide 1 pound of available phosphorus and 1 pound of available soluble potassium.
2. **Watering Fertilizers.** For application during watering, provide water soluble, nitrogen-enriched fertilizer containing 8.3 pounds of available nitrogen per 1,000 gallons of water.

B. **Seeding and Sodding Fertilizers.** Fertilizers in each class must contain a water insoluble and water-soluble component.

1. **Class A.** Provide and apply as specified by this subsection and as indicated by soil tests:

    a. **Water Insoluble Fertilizer.** Apply 32 pounds of water insoluble nitrogen per acre (i.e. 128 pounds of Ureaform or 115 of IBDU, etc.). Provide the water insoluble nitrogen from ureaformaldehydes, coarse grade isobutylidene diurea, or both.
    b. **Water Soluble Fertilizer.** Apply 48 pounds of nitrogen, phosphorous, and potassium nutrient per acre (i.e. 253 pounds of 19-19-19, 400 pounds of 12-12-12, etc.). Provide water soluble fertilizer containing a 1:1:1 ratio of nitrogen, phosphorous, and potassium. Ensure fertilizer components include urea, diammonium phosphate, and potassium chloride.

2. **Class B.** Provide and apply as specified by this subsection and as indicated by soil tests:

    a. **Water Insoluble Fertilizer.** Apply 32 pounds of water insoluble nitrogen per acre. Provide the water insoluble nitrogen from ureaformaldehydes, coarse grade isobutylidene diure, or both.
    b. **Water Soluble Fertilizer.** Apply nitrogen at a rate of 48 pounds of nutrient per acre and 40 pounds of potassium per acre. Ensure fertilizer components include urea and potassium chloride.

3. **Class C.** Provide and apply as specified by this subsection and as indicated by soil tests:

    a. **Water Insoluble Fertilizer.** Apply 32 pounds of water insoluble nitrogen per acre. Provide water insoluble nitrogen from ureaformaldehydes, coarse grade isobutylidene diurea, or both.
    b. **Water Soluble Fertilizer.** Apply nitrogen at a rate of 48 pounds of nutrient per acre. Ensure fertilizer components include urea.

917.11. Water. Use water that meets the requirements of section 911.

917.12. Seed. Provide the required certified seed mixture as specified in Table 917-2. Select each species of seed from the Qualified Products List. Supply seed in durable bags, with a tag marked by the manufacturer and supplier of the blended mix showing the species and variety name, lot number, net weight of contents, purity, and germination.

Seed must be tested in accordance with *The Proceedings of the Association of Official Seed Analysts*, "Rules for Testing Seeds." The Engineer will evaluate deficiencies below the percentage required for purity and germination, to determine acceptability.

Table 917-2
Seed Mixtures

Species	Minimum Purity (percent)	Germination (percent)	Seed Mixture							
			Mixture Proportions (percent by weight)							
			TDS	THV	TUF	TGM	THM	CR	TSM 6 – 24	TSM >24
Kentucky Blue Grass	98	85	5	15	10	10	30	—	—	—
Perennial Ryegrass	96	85	25	30	20	20	20	—	50	50
Hard Fescue	97	85	25	—	20	30	—	—	—	—
Creeping Red Fescue	97	85	45	45	40	40	50	—	—	—
Fults Salt Grass	98	85	—	10	10	—	—	—	—	—
Cereal Rye	85	85	—	—	—	—	—	100	—	—
Spring Oats	85	85	—	—	—	—	—	—	50	50

917.13. Sod. Provide sod consisting of a densely rooted blend of at least two bluegrass varieties with at least 30 percent creeping red fescue content, free of weeds, and grown on the same or similar soil as the topsoil on the project. Obtain the Engineer's approval of the sod in the sod field before harvesting. Before cutting the sod, mow the grass to 3 inches to 4 inches above the ground surface.

Cut the sod from ½ inch to ¾ inch thick. If cutting sod into strips, cut in small uniform units of approximately 10 square feet per roll to ensure ease of handling of the sod without tearing or breaking. The sod may be cut, transported, and laid in large rolls with machinery designed for that purpose.

A. **Pegs for Sodding.** Provide pegs of sound wood, at least 10 inches long, with a cross-sectional area of at least 0.75 square inches for pegging sod. Use longer pegs in sandy or similar soils.

917.14. Mulching Materials for Nursery Stock.

A. **Shredded Bark.** Provide shredded hardwood bark mulch consisting of tree bark stripped and shredded from saw logs with a de-barking machine. Shredded hardwood bark mulch must be capable of passing through a conventional mulch blower. Do not use wood chips or recycled construction material.

917.15. Mulch for Seed.

A. **Loose Mulch.** Provide clean, undamaged, and rot free straw in an air-dry condition for loose mulch. Loose mulch must be free of weed seeds or other deleterious material.

B. **Turf Mulch Blankets.** Select turf mulch blankets from the Qualified Products List. Anchor according to manufacturer's specifications. No metal stakes or staples will be allowed.

1. **High Velocity Mulch Blankets.** High velocity mulch blankets must have net covering on two sides. The net must meet the requirements of subsection 917.15.D and be capable of reinforcing the blanket to prevent damage during shipping, handling, and installation.

    a. **High Velocity Excelsior Mulch Blankets.** Provide high velocity excelsior mulch blankets that meets the following requirements:

        i. Blanket must consist of a uniform layer of interlocking excelsior fibers cut from sound, green timber;
        ii. The average roll weight, for an entire shipment, must be 12 ounces per square yard ±10 percent;
        iii. Blankets must be shipped in tightly compressed rolls; and
        iv. Each roll must have the roll weight and the manufacturer name written or stenciled on the roll wrapper or on an attached tag.

    b. **High Velocity Straw Mulch Blankets.** Provide high velocity straw mulch blankets that meet the following requirements:

        i. Blankets must consist of a uniform layer of clean wheat straw, free of weeds and weed seed;
        ii. When dry, the blankets must weigh 8 ounces per square yard ±10 percent;
        iii. The straw and net must be stitched together to create a uniform mat;
        iv. Blankets must be shipped in tightly compressed rolls; and
        v. Each roll must have the roll weight and the manufacturer name written or stenciled on the roll wrapper or on an attached tag.

2. **Mulch Blankets.**

    a. **Excelsior Mulch Blankets.** Provide excelsior mulch blankets meeting the requirements of high velocity excelsior mulch blankets except the blankets must weigh from 8 ounces to 12 ounces per square yard and have netting on one side.

    b. **Straw Mulch Blankets.** Provide straw mulch blankets meeting the requirements of high velocity straw mulch blankets, except the blankets must have netting on one side.

C. **Mulch Anchoring.** Select mulch anchoring material from the Qualified Products List.

1. **Latex-Base.** Provide latex-base mulch anchoring material composed of 48 percent styrene, 50 percent butadiene, and 2 percent additive, by weight. The mulch anchoring material must contain from 42.0 percent to 46.0 percent solids and a pH, as shipped, from 8.5 to 10.0. Protect the emulsion from freezing or prolonged exposure to sunlight.

2. **Recycled Newsprint.** Provide recycled newsprint mulch consisting of specifically prepared, biodegradable, shredded, recycled newsprint fibers. The recycled newsprint fiber must:

   a. Have a moisture content (total weight) no greater than 12 percent;
   b. Have a high-grade newsprint content of at least 96 percent by weight (oven-dry);
   c. Include tackifier content from 1.5 percent to 3 percent by weight;
   d. Have a water holding capacity of at least 32 ounces per 3.5 ounces of fiber;
   e. Contain a wetting agent and a defoaming agent; and
   f. Contain a nontoxic bright green or blue dyestuff that adheres to the fiber to minimize leaching of the color after application.

3. **Wood Fiber.** Provide specially prepared, biodegradable, air-dried, virgin wood fibers manufactured from 100 percent whole wood chips. Do not use recycled materials. The wood fiber must:

   a. Have a moisture content (total weight) no greater than 12 percent;
   b. Have an organic wood fiber content of at least 95 percent by weight (oven-dry);
   c. Include tackifier content from 3 percent to 5 percent by weight;
   d. Have a water holding capacity of at least 35 ounces per 3.5 ounces of fiber;
   e. Be dyed with a green or blue biodegradable dye; and
   f. Contain no growth or germination inhibiting materials.

4. **Guar Gum.** Provide guar gum tackifiers consisting of at least 95 percent guar gum by weight with the remaining 5 percent by weight consisting of dispersing and crosslinking additives.

5. **Other Tackifiers.** Provide water-soluble natural vegetable gums, guar gums blended with gelling and hardening agents, or a water-soluble blend of hydrophilic polymers, viscosifiers, sticking aids, and other gums as tackifiers.

D. **Mulch Netting.**

1. **Netting.** Provide mulch net with a mesh size from ½ inch by ½ inch to 1½ inches by 2 inches, formulated from or treated with a chemical that promotes the breakdown of the net within the first growing season after placement. Mulch netting must be strong enough to hold the mulch in place and still deteriorate when exposed to sunlight.

2. **Net Anchors.** Provide wood or other biodegradable net anchors, at least 6 inches in length. Do not use steel wire staples or pins to anchor mulch blankets or netting.

917.16. Weed Control. Provide herbicides registered for use on highway right-of-way by the Michigan Department of Agriculture and the United States Environmental Protection Agency. Obtain the Engineer's approval of herbicides prior to use. Do not use restricted use herbicides.

917.17. Growth Preventative Material. Provide cut stump herbicide composed of the ingredients and nominal concentrations as appropriate.

A. **Upland location.**

1. 83% paraffin oil, surface active compounds and coupling agents with blue colorant
   17% triclopyr, butoxyethyl ester
2. 82% paraffin oil, surface active compounds and coupling agents with blue colorant
   15% triclopyr, butoxyethyl ester
   3% isopropylamine salt of imazapyr

B. **Wetland or Aquatic Location**

1. 100% triclopyr choline salt with blue colorant

Section 918. ELECTRICAL AND LIGHTING MATERIALS

918.01. Conduit. Provide nationally recognized testing laboratory labeled conduits, with ultraviolet protection, and manufactured for use at temperatures of at least 194 °F unless otherwise required. For conduits encased in concrete, use Grade 3500 concrete. If steel reinforcement is required, provide reinforcement meeting the requirements of section 905.

Wall thickness and outside diameter dimensions must conform to ASTM D1785 for smooth-wall schedule 40 and 80 PVC conduit material. Maximum deviation from the minimum wall thickness is 3 percent.

Wall thickness range must be within 12 percent in accordance with ASTM D3035 for smooth-wall coilable schedule 40 and 80 PE conduit.

A. **Galvanized Steel Conduit.** Provide nationally recognized listed and labeled galvanized steel conduit meeting the requirements of ANSI C80.1.

Provide hot-dipped galvanized couplings and fittings that meet the requirements of ANSI/NEMA FB1. Provide elbows and nipples meeting the requirements for conduit. Provide thread-type fittings and couplings for rigid conduit.

B. **Smooth-Wall Schedule 40 PVC Conduit.** Provide smooth-wall polyvinyl chloride (PVC) conduit, fittings, and accessories, manufactured from PVC meeting the requirements of ASTM D1784 and the applicable NEMA TC2 and UL 651 requirements.

C. **Smooth-Wall Schedule 80 PVC Conduit.** Provide smooth-wall PVC conduit, fittings, and accessories manufactured from PVC meeting the requirements of ASTM D1784 and the applicable NEMA TC2 and UL 651 requirements.

D. **Smooth-Wall Coilable Schedule 40 PE Conduit.** Provide high-density polyethylene Type III, Grade P 33, Category 5, Class C conduit meeting the requirements of ASTM D3485, ASTM D3350, and ASTM D1248.

Mark conduit in accordance with ASTM D3485. Mark the conduit to indicate the producer code and designation, whether HDPE or Type III. Provide conduit produced from material with a color and ultraviolet stabilization code of C, D, or E in accordance with ASTM D3350. Provide black conduit for use above ground.

For each project, supply a general certification that the polyethylene conduit meets these requirements.

E. **Smooth-Wall Coilable Schedule 80 PE Conduit.** Provide smooth-wall, coilable, polyethylene conduit meeting the requirements of applicable sections of NEMA TC7, UL 651 and 651A, ASTM D3485.

Provide high-density polyethylene Type III, Grade P-33, Category 5, Class C conduit meeting the requirements of ASTM D3485, ASTM D3350, and ASTM D1248.

For each project, supply a general certification that the polyethylene conduit meets these requirements.

F. **Rigid Fiberglass.** Provide filament wound conduit and fittings consisting of E glass and corrosion resistant epoxy resin, manufactured for use at temperatures from −40 °F to 230 °F. Ensure conduit is pigmented with carbon black for ultraviolet protection and fire resistant in accordance with UL 94. Provide heavy walled fiberglass conduit meeting the specifications, labeling, and testing requirements of ANSI/NEMA TC14.

918.02. Electrical Grounding System. Provide material for the electrical grounding system meeting the following requirements.

A. **Flexible Grounding Connection.** Provide flexible grounding connections made of flexible, flat, tinned copper braid, with seamless tinned copper ferrules at each end. Provide flexible grounding connections with a minimum cross-sectional area equal to the cross sectional area of the grounding cable. Provide ferrule capable of being formed to fit the curved surfaces of a clamp or pipe.

B. **Grounding Conductors and Bonding Jumpers.** Provide grounding conductors and bonding jumpers sized in accordance with the current NEC.

C. **Grounding Rod.** Provide a copper clad steel grounding rod with a diameter of at least ¾ inch and a length of at least 10 feet, with no more than 10 ohms resistance to ground.

D. **Connecting Hardware.** Provide silicon bronze connecting hardware meeting the requirements of ASTM B124/D124M. Provide materials supplied by the same manufacturer to ensure compatibility.

918.03. Electrical Conductors and Cable. Provide conductors and cable meeting the requirements of the NEC, the serving utility, and ASTM specifications. Provide nationally recognized approved cable. Provide coated, soft drawn copper conductors in standard American Wire Gauge (AWG) sizes.

Provide conductors and cables with the size, voltage rating, insulation type, and manufacturer's name permanently marked on the outer covering at regular intervals. The manufacturer must provide splicing or terminating information for installation of the cable to the Engineer and the Contractor.

A. **Overhead and Underground Service Conductors and Cable.** Provide cable consisting of three, 1/C polyethylene insulated stranded conductors, assembled under a common polyethylene jacket. Provide cables meeting the requirements of IMSA 20-1 for aerial and duct installation, except provide conductors of the sizes and numbers required. Single conductors rated for direct burial in a dedicated service conduit are permitted.

Provide Periwinkle type, or Department-approved equal, aluminum multiplex cable, consisting of two sheathed conductors wrapped around a ground and messenger cable. Ensure the phase conductor consists of seven strand, No. 4 AWG with an insulation thickness of 45 mils. Provide a bare neutral messenger consisting of a 6/1 strand, No. 4 AWG, with a rated strength of 1,860 pounds.

B. **Traffic Signal Wire and Cable.** Provide stranded traffic signal wire and cable for aerial, underground duct, or direct burial systems. Except for IMSA 51-5 cable, provide polyethylene insulated and polyethylene jacketed cables with from two to 20 conductors. Provide IMSA 51-5 PVC insulated, nylon jacketed cables, loosely encased in a polyethylene tube. Provide the sizes and number of conductors shown on the plans.

Provide IMSA cable that meets the requirements of IMSA 20-1, IMSA 20-3, IMSA 20-5, IMSA 40-2 (aerial and duct), IMSA 40-4 (aerial self-supporting), IMSA 50-2 (loop lead-in), and IMSA 51-5 (loop) with the exceptions and additions specified in this subsection.

1. **Conductors.** Provide concentric stranded, Class B, soft copper conductors meeting the requirements of ASTM B8, except do not allow joints in the conductors after completing final drawing operations.

2. **Circuit Identification.** Provide color coded insulation in accordance with the following:

   a. Table 5.1 of IMSA 20 1,
   b. IMSA 20 2,
   c. IMSA 20 5,
   d. Table 5.2 of IMSA 40 2, and
   e. IMSA 40 4.

   Do not print numerals or words on the insulation for conductor identification.

C. **Messenger Cable.** Provide stranded, ¼ inch, Class C, galvanized, extra high-strength steel strand messenger cable of no more than seven-wire, meeting the requirements of ASTM A475, as specified by 9.1-A of IMSA 20-3 and 11.1 of IMSA 40-4.

918.04. Direct Burial Cable and Conductors. Install direct burial cable and conductors in conduit unless otherwise shown on the plans.

Direct burial cable and conductors in conduit for use in wet locations must be a type allowed in the current NEC for direct burial.

Unless otherwise required, provide nationally recognized listed cables rated at 600 volts. Provide cables and conductors resistant to oils and chemicals, rated 194 °F dry and 167 °F wet, for installation in wet and dry locations exposed to the weather, and meeting the requirements of UL 44.

Provide cables for electric service entrance runs with a USE rating.

For all individual conductors, provide type RHW/USE.

A. **Conductors.** Provide uncoated, copper, UL 44 approved conductors meeting the requirements of ASTM B3. Provide Class B conductors, stranded in accordance with ASTM B8. Ensure the manufacturer's insulation curing process does not damage uncoated conductors.

Color code the insulation on conductors No. 2 AWG and larger. Field tape at least 12 inches of conductors ends with half lapped color tape. Use colors as described in the next paragraph

Use conductors with colored insulation for sizes smaller than No. 2 AWG. Color code neutral conductors white for 240/120 V systems and gray for 480/277 V systems. Color code single phase 3-conductor with one black conductor, one red conductor, and one white conductor for a 120/240 V system. Color code single phase 2-conductor with one brown conductor, and one orange conductor for a 480 V system. Color code single phase 2-conductor with one black conductor and one white conductor for a 120 V system. Color code single phase 3-conductor with one brown conductor and one orange conductor and one gray conductor for a 480/240 V system. Color code three phase 4-conductor with one brown conductor and one orange conductor and one yellow conductor and one gray conductor for a 480/277 V system.

918.05. Equipment Grounding Conductor. Provide insulated or bare, copper conductors meeting the requirements of ASTM B3 for equipment grounding conductors. Provide equipment grounding conductors that are stranded in accordance with ASTM B8, for Class B. For installing conductor in conduit, insulate and color code the conductor green. For installing in earth, keep the conductor bare.

918.06. Handholes.

A. **Concrete.** Provide Grade 3500 concrete.

B. **Steel Reinforcement.** Provide bar or welded cage mesh steel reinforcement capable of supporting HS-20-44 loading. Provide reinforcement as shown on the plans or in accordance with the manufacturer’s design. If reinforcement deviates from the plans, provide calculations showing that the new design supports HS-20-44 loading.

C. **Frame and Covers.** Provide frame and covers of steel, and classified as light duty or heavy duty. Provide covers reading "MDOT ELECTRIC, MDOT TRAFFIC SIGNAL," "MDOT TRAFFIC CONTROLS," or "MDOT FREEWAY LIGHTING" in the location and of the size specified on the handhole detail sheet.

1. **Light Duty Cover.** Provide East Jordan No. 2982A-18, Neenah Foundry No. R-6012-D round cover or a Department-approved equal.

2. **Heavy Duty Cover.** Provide East Jordan No. 2860A or Neenah Foundry No. R-6052-D round cover or a Department-approved equal.

D. **Polymer Concrete Handhole Boxes and Covers.** Construct handhole boxes of polymer concrete, reinforced with a heavy weave fiberglass.

Provide heavy duty enclosures and covers designed and tested to −50 °F, with a compressive strength of at least 11,000 psi. Provide covers with a friction coefficient of at least 0.5.

1. **Boxes.** Provide stackable, heavy duty, nominal 17 inch by 30 inch by 12 inch handhole boxes, rated for 5,000 pounds over a 10 inch by 10 inch area.

2. **Covers.** Provide handhole covers with a service load of at least 15,000 pounds over a 10 inch by 10 inch area. Provide covers marked with a logo imprint of "MDOT TRAFFIC SIGNAL" or "MDOT TRAFFIC CONTROL." Secure covers with stainless steel, 300 series, ⅜ inch, 16NC hex bolts and washers.

E. **Handhole, Square, 4 foot.** Construct handholes from concrete.

1. **Handhole.** Provide handholes with live loads meeting the requirements of AASHTO HS 20-44 for heavy traffic. Increase the handhole design live load by 20 percent, given an earth cover from 2 feet to 5 feet.

   Provide standard telecommunications Type S precast handholes with inside dimensions of at least 48 inches by 48 inches by 48 inches.

   Center the top opening in the roof of the handhole and provide at least a 39 inch diameter, clear opening. Provide eight bell end inserts in the sides for a 4-inch PVC conduit. Provide a knockout for one, 14-inch diameter sump crock in the base of the handhole.

   Provide a handhole that is watertight to within 42 inches of grade. Ensure the manufacturer provides master sealer for joints and holes, including grade rings and pull in irons.

   Provide one, 12-inch, interlocking, grade ring with a galvanized step cast into the ring. Provide a grade ring with an outside diameter of at least 45 inches and an inside diameter of 39 inches ±1 inch.

Cast metal bolt anchor inserts for ½-inch bolts into each wall. Ensure spacing between inserts is no greater than 24 inches. Protect the inserts during casting to prevent filling will concrete.

2. **Hardware.** Provide metallic hardware that is hot-dipped galvanized or stainless steel. Provide a complete hardware package with each handhole including the following:

   a. One hook ladder for hooking on the step of the grade ring when positioned at the climbing angle;
   b. Four pull-in irons with backing plates;
   c. Eight, 36-inch cable racks (Underground Devices Inc., No. CR36 or Department-approved equal); and
   d. Sixteen, 3-inch throat saddle (Underground Devices Inc., No. 3HDS or Department-approved equal).

3. **Frame, Ring and Cover.** Provide a heavy duty cast iron frame, grade ring, and cover manufactured by East Jordan Iron Works, or a Department-approved equal. Provide a Model 1220C ring and cover, with "Signals & Lighting" cast into the cover. Do not use alternate ring and cover model numbers. Provide a frame weighing 410 pounds and a cover weighing 245 pounds.

F. **Handhole, Round, 3 foot diameter.** Construct handhole boxes from concrete.

1. **Handhole.** Provide handholes with live loads meeting the requirements of AASHTO HS 20 for wheel loading.

   Ensure concrete attains a 28-day compressive strength of 4,500 psi.

   Provide smooth or deformed welded wire fabric in accordance with ASTM A1064/A1064M.

   Provide reinforcing steel meeting the requirements of ASTM A615/A615M for Grade 60 rebar, if required. Bend bars and place in accordance with the latest ACI standards.

   Provide precast handholes with the following characteristics:

   a. An inside diameter of 36 inches, capable of accommodating round covers;
   b. Integral wall and base;
   c. A height of 44 or 48 inches;
   d. An outside diameter of 44 inches;
   e. One, 6-inch knockout in the base for a sump drain hole; and
   f. Walls with four tapered knock-outs for conduit entering the handhole, 2 inches deep from the inside and from 11 inches to 10 inches in diameter.

   Construct the handhole to accept a heavy-duty frame and cover centered atop the handhole.

2. **Frame and Cover.** Provide a heavy duty cast iron frame, grade ring, and cover manufactured by East Jordan Iron Works, or a Department-approved equal. Provide a Model 1220 ring and cover, with "Traffic Signal" or "MDOT ITS" cast into the cover. Do not use alternate ring and cover model numbers. Provide a total assembly weighing 675 pounds.

918.07. Light Standard Foundation.

A. **Concrete.** Provide Grade 3500 concrete.

B. **Steel Reinforcement.** Provide steel reinforcement as shown on the plans, and meeting the requirements of section 905. Where reinforcement meets the requirements of the NEC it must be used for grounding.

C. **Anchor Bolts, Nuts, and Washers.** Provide anchor bolts, nuts, and washers meeting the requirements of subsection 908.14.

Provide anchor bolts with a diameter of at least 1 inch with series 8UN threads. Provide anchor bolts threaded 4 inches beyond the anchor bolt projection shown on the plans.

D. **Ground Rods.** Use a ground rod meeting the requirements of subsection 918.02.C.

1. **Grounding Electrode Conductor.** Provide No. 6 stranded bare copper grounding electrode conductor for the street lighting unit meeting the requirements of subsection 918.02.B.

2. **Conduit.** Provide conduit in the foundation to allow placement of conductors and grounding wires as shown on the plans and meeting the requirements of subsection 918.01.

918.08. Light Standards. Provide steel, aluminum, or other light standard material. Provide light standards designed in accordance with the AASHTO *Standard Specifications for Structural Supports for Highway Signs, Luminaires, and Traffic Signals*. Use a wind importance factor based on a recurrence interval of 50 years for the design wind speed. Do not use alternative methods for determining wind speed. Use a Category I fatigue importance factor. Submit calculations for the light standard design, sealed by a professional engineer licensed in the State of Michigan, to the Engineer for approval.

A. **Steel Light Standards.**

1. **Shafts.** Provide light standard shafts of hot rolled low carbon steel or high strength low alloy steel. Provide shafts with a tensile yield strength of at least 50,000 psi when tested before or after fabrication.

2. **Handhole.** Provide light standards with reinforced handholes with a steel cover and a grounding nut or lug located inside the shaft. Ensure the grounding nut or lug is easily accessible from the handhole.

3. **Anchor Bases.** Provide one-piece anchor bases of cast steel or hot rolled steel plate. Cast steel anchor bases must meet the requirements of ASTM A27/A27M for Grade 65-35 and hot rolled steel plate anchor bases must meet the requirements of ASTM A36/A36M.

4. **Bracket Arm Assembly.** Provide a bracket arm assembly of truss-type design and steel meeting the requirements of ASTM A53/A53M Grade B or ASTM A36/A36M. Ensure the installed bracket arm assembly provides a weather resistant connection with a smooth wiring raceway.

5. **Hardware.** Provide AISI Series 300 stainless steel threaded fasteners and lock washers to secure parts to the shaft.

B. **Aluminum Light Standards.**

1. **Shafts.** Provide round, octaflute, or octagonal aluminum shafts with a uniform taper.

   Provide a shaft fabricated from a single piece of seamless tubing of aluminum alloy 6063, meeting the requirements of ASTM B221.

   After fabrication, ensure the shaft has physical strength properties meeting the requirements for T6 temper.

   Provide aluminum alloy 356-T6 castings, except for the shaft top provide aluminum alloy 43F.

   Provide sand castings meeting the requirements of ASTM B26/B26M. Provide permanent mold castings meeting the requirements of ASTM B108/B108M.

2. **Handhole.** Provide light standards with a reinforced handhole, an aluminum cover, and a grounding nut or lug located inside the shaft. Ensure the grounding nut or lug is easily accessible from the handhole.

3. **Bracket Arm Assembly.** Provide a bracket arm assembly of truss-type design and aluminum alloy pipe or tapered tubes. Ensure the installed bracket provides a weather resistant connection with a smooth wiring raceway.

   Provide pipes meeting the requirements of ASTM B241/B241M for aluminum alloy 6063-T6 or 6061-T6.

   Provide tapered tubes meeting the requirements of ASTM B221 for aluminum alloy 6063-T6 or 6061-T6.

4. **Hardware.** Provide aluminum alloy 2024-T4 or AISI Series 300 stainless steel threaded fasteners, lock washers, and other pieces to secure parts to the shaft.

C. **Frangible Transformer Bases.** Provide frangible transformer bases selected from the Qualified Products List.

D. **Anchor Bolts.** Provide galvanized anchor bolts, studs, nuts, couplings, and washers in accordance with subsection 908.14.

918.09. Luminaires. Use Luminaires per the contract documents.

918.10. Tower Lighting Unit. Provide tower lighting units designed in accordance with AASHTO *Standard Specifications for Structural Supports for Highway Signs, Luminaires and Traffic Signals*. Use a wind importance factor for the design wind speed, based on a recurrence interval of 50 years. Do not use alternative methods for determining the wind speed. Use a Category I fatigue importance factor. Base design calculations on a yield strength no greater than 50,000 psi.

A. **Shaft.** Provide steel shaft material from a single thickness steel sheet with no laminations. Shaft material must meet the requirements of ASTM A1011/A1011M, Grade 50 with a silicon content no greater than 0.060 percent or with a silicon content from 0.150 percent to 0.250 percent.

Provide shafts with an overall diameter of at least 23½ inches at the base, with uniform taper to the top to a diameter of at least 6 inches. Shafts must have a minimum wall thickness of 3/16 inch.

1. **Handhole.** Provide shafts with hinged doors fabricated from the same material as the shafts. Provide doors at least 24 inches by 14 inches in size. Provide doors with a hasp for a padlock. Place access holes so they do not intersect the longitudinal seam weld on the pole.

B**. Anchor Base.** Provide steel base material from a single thickness steel sheet with no laminations. Base material must meet the requirements of ASTM A572/A572M, Grade 50 with a silicon content no greater than 0.060 percent or with a silicon content from 0.150 percent to 0.250 percent.

C. **Anchor Bolts, Nuts, and washers.** Anchor bolts, nuts and washers must meet the requirements of subsection 908.14.

D. **Head Frame Assembly.** Provide a headframe assembly with a pair of pulleys located for each stainless steel cable supporting the luminaire ring. Provide a roller assembly or a single pulley for the power cord. Provide a hoisting system with two or three stainless steel cables at the head frame assembly.

1. **Power Cord Roller Assembly.** If using a roller assembly to support the power cord, provide six rollers mounted between two cold-rolled steel plates that are zinc-electroplated in accordance with ASTM B633, and yellow chromatic-dipped. Ensure the power cord rides on rollers of acetate resin mounted on AISI 304 stainless steel shafts. Locate the six rollers to support the power cord in a bending radius of at least 7 inches. Except for pulleys and rollers, fabricate parts of the assembly from ASTM A572/A57M Grade 345 steel.

   Design the assembly to protect parts from the weather.

2. **Power Cord Pulley.** If using a pulley to support the power cord, provide pulleys fabricated from a single piece of galvanized steel, with a diameter of at least 16 inches.

3. **Pulleys for Stainless Steel Support Cables.** Provide pulleys with a minimum diameter of 6 inches fabricated from one piece of stainless steel or galvanized steel.

   Provide pulleys with permanently lubricated bronze bearings and stainless steel axle pins. Ensure the depth of the vee on pulleys is equal to or greater than the diameter of the cable. Provide guards to prevent cables from riding off the pulleys.

4. **Latching.** The Contractor may locate the latching mechanism for the luminaire mounting ring at the head frame assembly or at the base of the pole.

   If the latching mechanism is at the head frame assembly, provide three latches as an integral part of the head frame assembly. Latch the luminaire mounting ring by the alternately raising and lowering the luminaire ring assembly using the winch and hoisting assembly. Attach moving parts of the latching mechanism to the luminaire ring assembly. Ensure the moving parts are serviceable at ground level. Ensure the luminaire ring does not move horizontally or rotate around the pole during the latching or unlatching process. Use indicator flags, visible from the ground, to signal the latching and locking of each latching mechanism.

   If using a two cable hoist system, provide for the latching of the luminaire mounting ring at the base of the pole. Provide a cable anchoring device to latch each supporting cable in place.

E. **Luminaire Mounting Ring.** Provide a luminaire mounting ring capable of supporting 2 inch diameter mounting tenons, complete with ballasts, evenly distributed around the ring for mounting the required number of luminaires. Ensure the luminaire mounting ring provides a raceway or enclosure for the required electrical connections to the luminaires.

Provide the mounting ring with at least No. 12 AWG copper wire rated at 200 °F.

Provide a galvanized steel luminaire mounting ring and related components. Galvanize in accordance with ASTM A123/A123M after fabrication.

Equip the luminaire mounting ring with a weatherproof male receptacle to energize the luminaires in the lowered position. Ensure connections are weather tight and protected when the luminaires are in the operating position.

Make provisions for centering and damping contacts the luminaire mounting ring may encounter while ascending and descending the pole.

Provide roller-contact with spring-loaded centering arms located on the luminaire mounting ring. Ensure the luminaire ring centering device maintains the ring concentric with the pole.

F. **Luminaires for Tower Lighting.** Provide luminaires capable of operating at mounting heights greater than 100 feet. Provide luminaires capable of withstanding wind velocities of 120 feet per second and resulting vibrations. Provide a luminaire that weighs no more than 94 pounds. When mounted in operating position, ensure an area no greater than 5.4 square feet is exposed to the wind.

Provide luminaires meeting the requirements specified by the following.

1. **Housing.** Provide a structurally rigid luminaire housing of cast or formed aluminum with a copper content no greater than 0.2 percent.

   Provide a housing containing an integral slip fitter mounted on a 2-inch pipe bracket or a 1½-inch pipe bracket with inserts.

   Provide a mechanical means to limit insertion of the pipe arm. Provide a mechanical means for leveling the luminaire to within a range of ±3 degrees from the horizontal.

   Provide a leveling surface on the housing exterior to mount the luminaire in the operating position. For luminaires producing asymmetrical light distributions, orient to distribute the light as shown on the plans. For exposed exterior hardware and fasteners, provide stainless steel, Monel metal, or aluminum alloy hardware and fasteners. For the luminaire-to-bracket arm mounting fasteners and other internal fasteners, provide stainless steel or zinc coated steel fasteners. Provide remaining internal hardware of stainless steel, aluminum alloy, or zinc coated steel.

2. **Reflector.** Provide aluminum or glass reflectors, affixed to the refractor or the cover glass with a gasket. Provide extruded silicone rubber or synthetic fiber felt gaskets.

3. **Aluminum Reflector.** Provide enclosed aluminum reflectors fabricated with ALGLAS reflector finish or a sealed anodic coating over an electrolytically or chemically brightened specular surface. Provide optical parts that are weather tight and bug tight. Provide a coating that is at least 4 milligrams per square inch in accordance with ASTM B137. Provide a coating seal meeting the requirements of ASTM B136. The fabricator must submit certification that the reflector coating meets requirements, upon the Engineer's request.

4. **Glass Reflector.** Provide one piece clear borosilicate glass reflectors free of bubbles and ripples. Protect the reflector back surface from the effects of atmospheric oxidation and moisture.

5. **Cover Glass.** Provide clear tempered cover glass. Mount the cover glass to the holding ring, but allow for easy replacement.

   Use an ethylene-propyleneteroplymer (EPT) or synthetic fiber felt gasket for the cover.

6. **Ballast.** Mount the ballast or ballast housing on the luminaire housing. Ensure the ballast, ballast housing, and luminaire housing are entirely enclosed. Install a gasket between the ballast housing and luminaire housing. Provide ballasts designed to operate at the rated voltage shown on the plans.

   Identify the ballast lamp wattage and circuit voltage in accordance with ANSI C 82.4.

   Provide a regulating auto transformer type ballast. Ensure an applied primary voltage change of ±10 percent of line nominal at the ballast does not cause more than a ±13 percent change in lamp wattage. Ensure a power factor of at least 90 percent at the rated voltage. Provide a ballast that starts reliably at −20 °F with ±10 percent of line nominal voltage variations.

7. **Lamp.** Provide lamps of the type and size shown on the plans.

8. **Socket.** Provide a socket assembly of rigid construction to ensure the lamp retains the required position during service. Do not use socket adapters for positioning lamps.

   Provide nickel plated brass sockets with a porcelain covering. Provide a socket with lamp grips. Provide a socket with a spring loaded center contact. Weld or attach sock leads with crimp-type, solderless, compression connectors.

   If the socket is capable of variable socket positions, provide information to establish the correct socket position.

9. **Wiring.** Complete internal wiring and connections so only incoming supply conductors require attachment to pressure type connectors on a terminal block.

   Provide a terminal block rated at 600 volts and meeting the requirements of the NEMA *Specifications for Wiring Terminals*. Provide a terminal board that accommodates crimp-on solderless, compression connectors for interior wiring.

   Mechanically and electronically fasten the incoming supply conductors with compression terminals to accommodate wire from No. 12 to No. 16 AWG.

10. **Fusing.** Provide and mount inline FNM type fuses in the luminaire housing. Provide fuses with the current ratings in Table 918-2:

Table 918-2 Current Ratings per Circuit Voltage	
Circuit Voltage	**Current Rating**
120 volts	30 amperes
240 volts	15 amperes
277 volts	15 amperes
480 volts	15 amperes

11. **Painting.** Paint the luminaire housing metallic gray.

12. **Packaging.** Pack luminaires individually for shipment.

13 **Assembly Drawings.** Provide assembly and installation drawings.

14. **Sampling and Testing.** Provide Test Data certification for tower lighting luminares.

G. **Lowering Device.** Equip the inside of each tower lighting unit with an electric motor and a hoisting device capable of raising the required number of luminaires plus 300 pounds to the operating position and lowering the luminaires to 5 feet above the foundation. Ensure raising and lowering operations can be controlled 15 feet from the pole base. The Contractor may use a transformer to obtain the desired voltage of the motor for remote operation.

Provide a lowering device with a worm gear, a gear reducer hoist of at least 30:1 and supporting, hoisting, and electric cables to the luminaire mounting ring.

Mount the device inside the pole base with stainless steel hardware. Provide the hoist drum with a stainless steel cable at least ¼ inch in diameter, attached to the hoist drum and long enough for at least one complete layer on the drum plus the length required to lower the luminaire mounting ring to the lowest position.

If using a single hoisting cable, provide a cable junction plate to join the three supporting cables to the hoisting cable and to hold the lower end of the electric cable. Ensure the junction plate is accessible through the handhole when the luminaire mounting ring is in the raised position. Provide three stainless steel supporting cables $^{3}/_{16}$ inch in diameter. Provide means to adjust the length of each of the three supporting cables by 4 inches, with the luminaire mounting frame at the top of the pole. As an alternative, the Contractor may provide for each of the three supporting cables to terminate through a coil spring under compression, so when the luminaire mounting ring is in the raised position, differences in tension of one or two cables will compensate for a difference of 3 inches in the length of those cables.

H. **Electric Cable.** Provide portable power cable Type W-4, round, 600 volt, No. 8 AWG, copper electrical cables with 133 strands in each conductor, rated at 167 °F. Provide cable that meets the requirements of ICEAS-19-81.

Provide the same type of cable for the electric supply from the safety switch to the terminal block in the pole, and from the terminal block to the twist loc connector. Ensure the cable reaches through the handhole in the pole to serve as a power source for the electric drill or motor to operate the lowering device.

Where the electric cable attaches to the cable junction, provide a strain relief grip to hold the electric cable. Provide a strain relief grip that has an insulated compression-type connector, capable of supporting the cable when the luminaire mounting ring is lowered. Where the electric cable connects to the luminaire mounting ring, provide a similar strain relief grip to hold the other end of the electric cable.

I. **Lightning Arrestor.** Mount a lightning arrestor, of the operating voltage and conditions necessary, inside the pole base. Ensure the lightning arrestor is accessible through the handhole, and connected between the load side of the fused safety switch and the pole grounding lug by the shortest practical connections.

J. **Twist Loc Connector.** Provide a 600 volt, nationally recognized listed 50 ampere, three pole, four wire, twist-type connector. Provide a power cord from the luminaire mounting ring with a male plug, and a supply cord with a female plug.

K. **Electric Drill/Motor.** Provide an electric drill or motor to operate the hoisting device. If using an electric drill, provide a 240 volt, heavy duty, industrially rated, ½-inch capacity, electrically reversible electric drill with special chuck to fit the lowering device hoist. Provide an electric drill with a special mounting bracket for attaching to the hoist through the handhole in the pole.

If using an electric motor, use a reversible, standard frame motor with a magnetic brake.

Mount the drill or motor frame, so it is connected to the hoist without being held by other means. Provide a drill or motor that operates the hoist in either direction, from the mounted position.

Provide a flexible, electric cord with heavy-duty 600-volt insulation for the drill or motor and an attachment plug that fits the 240-volt outlet in the metal pull box. Provide a momentary push button control in the electric cord for the drill or on a separate cord from the drill, to allow operation of the drill in either direction, or stopping when the operator is as far as 15 feet from the pole.

Provide a test cable with the drill or motor to energize the luminaires when the mounting ring is in the lowered position. Provide the same type cable as the electric cable up the pole. Provide a cable that includes the required fittings and a length to connect the electric supply to the weather tight outlet in the luminaire frame.

L. **Foundation.** Construct the foundation for the tower lighting unit as shown on the Plans. Ensure the pole manufacturer provides the anchor bolts for installation in the foundation.

Provide each anchor bolt with two nuts for plumbing the pole. Zinc coat the upper 15 inches of the bolts and the nuts in accordance with ASTM A153/A153M. Provide anchor bolts and associated nuts, washers, and hardware meeting the requirements of subsection 908.14. Install anchor bolts as specified in section 810.

M. **Fused Safety Switch.** Provide the fused safety switch as shown on the Plans.

918.11. Wood Poles. Provide western red cedar, red pine, or southern pine poles meeting the requirements of ASC O5 and P.L.D. Specification for Wood Poles.

Incise the circumferential surface area of poles beginning from at least 24 inches below the ground line and extending to at least 12 inches above the ground line. Machine shave poles full length above the incised area.

Treat poles full length with pentachlorophenol-petroleum preservative solution in accordance with AWPA *Standard for the Preservative Treatment Wood Poles* P8-64 and P9-65. Provide a solution containing at least 5 percent of pentachlorophenol by weight.

A. **Guys and Guy Anchors.** Provide extra high strength grade seven-strand guy wire. Provide heavy, two-bladed, malleable iron expansion-type guy anchors. Provide galvanized ¾ inch by 8-foot thimble eye type guy anchor rods. Provide anchor guys with metal or plastic guards.

B. **Miscellaneous Hardware.** Provide hot-dip galvanized miscellaneous pole line hardware that is a standard product of electrical materials manufacturers.

Section 919. PERMANENT TRAFFIC SIGN AND SUPPORT MATERIALS

919.01. General Requirements. Permanent traffic signs and sign support material must meet the requirements of the MDOT Sign Support Standard Plans and this section.

919.02. Traffic Signs. The Department classifies signs by type of sign panel material and type of sign face, as follows:

Table 919-1 Sign Panel and Face Types		
Sign Panel		
Type	**Material**	**Size Limits**
I	Aluminum Extruded Sections	Height > 48 inch or Width > 120 inch
II	Plywood	Height = 48 inch and Width = 24 inch From Height ≥ 36 inch and width ≥ 36 inch Up to Height ≤ 48 inch or Width ≤ 120 inch
III	0.080 in Aluminum Sheet (a)	36 in by 36 in
IV	0.040 inch Aluminum Sheet (a)	Overlay
V	0.125 inch Aluminum Sheet (a)	48 inch by 48 inch and as shown in SIGN-100 series
Sign Face		
Type	**Background**	**Legend and Border**
A	Reflectorized	Reflectorized
B	Reflectorized	Non-reflectorized
C	Non-reflectorized	Reflectorized
a. Round the corners and remove burrs at the corners and mounting holes		

A. **Sign Panel Material and Fabrication.**

1. **Aluminum Extruded Sections.** Provide aluminum extruded sections in a variety of widths with plain butt-type edges for connecting to adjoining horizontal sections. Sections must be one-piece with no vertical splices and have a cross-sectional shape meeting the minimum requirements specified in Table 919-2. Sections must have at least a 0.125-inch nominal thickness. Exterior corners must have a radius of at least 0.040 inch.

   Sign panel sections must be extruded aluminum alloy 6063-T6, meeting the requirements of ASTM B221. Panel sections, after fabrication, must be flat to within 0.031 inch or less per foot of length and to within 0.004 inch or less per inch of width.

   Degrease aluminum extruded sign panel sections in accordance with the sheeting manufacturer's recommendations. After degreasing, surface treating, and rinsing, maintain sign panels free of grease, oil, or other contaminants.

Table 919-2 Cross-Sectional Requirements for Aluminum Extruded Sign Sections for Type I Sign Panels						
Length of Sign Support Type	**Moment of Inertia**	**Section Modulus**	**Elements of Cross Section**			
			No Free Ends		**One Free End**	
			b/t	**≥I/y**	**b/t**	**≥I/y**
≤30 ft on Columns ≤20 ft on Cantilevers ≤30 ft on Trusses	≥0.94 W	≥0.55 W	8–50	56.0C	5–28	32.0A
			>50	3.4D	>28	11.6B

Note: b = the compression width of stiffener elements in inches.
t = the thickness of the stiffener element in inches.
I = moment of inertia of the sign section in inches.
y = the distance from the neutral axis to the centroid of the compression width of the element.
W = the width of the sign section in feet.
A = W/(63-b/t).
B = 1.0×10^{-4} W$(b/t)^2$.
C = W/(111-b/t).
D = 1.0×10^{-4} W$(b/t)^2$

Connect the sections horizontally with ⅜ inch diameter stainless steel bolts, spaced as shown on the Sign Support Standard Plans. Section connections or sign-to-post connections must have no fasteners that project through the sign panel face.

Position the plank second from the bottom of the sign.
Position the 6 inch panel between 2- 12 inch panel sections. Do not use 6 inch panel for the signs top or bottom.

Before transporting sign panels, ensure the support angles and wide flanged shapes are shop connected and remain on the sign.

2. **Plywood.** Plywood sign panels must be ⅝ inch thick and have a black or natural color overlay on both sides. Panels must meet the requirements of the U.S. Product Standard PS1-09 for Group 1 wood species, Grade B-B veneer, exterior type, high-density overlaid plywood. Inner plies must meet the requirements of Section 5.8.1, “Crossband Gaps and Center Gaps” of the U.S. Product Standard PS1-09. Inner plies must have no continuous core gaps, tunnels, holes, or through openings that travel longitudinally or transversely through the plies, as measured from the panel edge. Crossband gaps or center gaps allowed by the U.S. Product Standard PS1-09 must be filled with a synthetic filler repair, in accordance with Section 5.3, “Synthetic Repairs” of the U.S. Product Standard PS1-09.

   Do not make vertical splices in plywood signs. The Engineer will allow horizontal splices only for Exit gore signs. Do not splice plywood sign panels, unless otherwise shown on the sign details. Do not make horizontal splices through legends or symbols.

   Prepare the plywood surface for sheeting application by lightly abrading the surface with a product recommended by the sheeting supplier. Do not power sand. Wipe the surface with a solvent and allow to dry in accordance with the sheeting manufacturer's recommendations. Smooth and seal edges with one coat of exterior oil base paint.

After preparing the plywood surface, ensure no grease, oil, or other contaminants come in contact with the surface.

3. **Aluminum Sheet.** Provide aluminum sheet for Type III, Type IV and Type V sign panels meeting the requirements of ASTM B209 for aluminum alloy 6061-T6, 5052-H38, or 5154-H38.

   Aluminum sheet for Type III sign panels must be fabricated from nominal 0.080 inch thick aluminum sheet with mill tolerance meeting the requirements of ASTM B209. Aluminum sheet for Type IV overlay sign panels must be fabricated from at least nominal 0.040 inch thick aluminum sheet, at least 0.037 inch thick.

   Degrease the aluminum sheet in accordance with the sheeting manufacturer's recommendations. After degreasing, surface treating, and rinsing, maintain sign panels free of grease, oil, or other contaminants.

B. **Sign Face and Legend Material.**

1. **Reflective Sheeting Material.** Select reflective sheeting for permanent signs from the Qualified Products List.

   Provide the Engineer with written certification that reflective sheeting meets the following requirements:

   a. Sheeting material on each sign is a Qualified Product, obtained from the same sheeting manufacturer;
   b. Signs are manufactured in strict compliance with the sheeting manufacturer's requirements; and
   c. Each 145 foot length roll of reflective sheeting contains no splices.

2. **Sheeting Application.** Fabricate and apply legends in accordance with the *Michigan Standard Highway Signs Manual*, or as shown on the plans.

3. **Direct Applied Reflective Legend.** Cut legends with a smooth, regular outline, free of ragged or torn edges, and with interior corners cut to $^{3}/_{16}$ inch $\pm^{1}/_{16}$ inch radius.

   Apply legends in accordance with the reflective sheeting manufacturer's recommendations.

   For Type I aluminum extruded sign sections, cut the legend components along each metal sign section joint after applying the legend.

4. **Non-Reflective Legend, Borders and Arrows.** Provide non-reflective black material for legend, borders, and arrows and apply using ink, silkscreen method, or non-reflective sheeting. Provide material and apply non-reflective legends, borders and arrows in accordance with the manufacturer's specifications.

5. **Reflective Panels.** Cut reflective sheeting strips at least 2 inches wide.

   Provide sheeting on reflective panel for permanent sign supports matching the material type and background color of the sheeting off the sign mounted on the post, except for YIELD and DO NOT ENTER signs where the reflective panel will be red.

   Attach the reflective strip to Polyvinyl Chloride (PVC) or 0.080 inches thick aluminum substrate. If aluminum is used on a u-channel post a backing plate will be required.

   Attach the reflective panel with stainless steel fasteners.

C. **Sign Hardware.** Steel shapes, bars, and plates must meet the requirements of ASTM A36/A36M, or Department-approved equal, and be hot-dip galvanized in accordance with ASTM A123/A123M.

Bolts, nuts, washers, U-bolts, and straps must be stainless steel alloy meeting the requirements of ASTM A320/A320M, for Class 1, Grade B8. Provide self-locking, nylon insert-type nuts meeting the requirements of ASTM A320/A320M and ASTM A194/A194M for Grade 8F. If using U-bolts formed from straight bar stock, ensure U bolts are formed by cold working.

Aluminum alloy shapes and plates must meet ASTM B308/B308M, for aluminum alloy 6061-T6.

Cast post clips must conform to ASTM B108/B108, for aluminum alloy 356.0-T6.

Table 919-3
Retroreflective Sign Sheeting Material Guidelines

Sign Category	Type	Material Type	Color
Yellow Warning Signs	W-series (non school related), E13-1, E13-2, E11-1, OM-1, OM-2, OM-3	ASTM Type XI	Fluorescent Yellow
School Signs	S1-1, S4-3, S4-5, S4-5a, school portion of S5-1, W16-7p, W16-9p, W16-2, W16-2a	ASTM Type XI	Fluorescent Yellow Green
Freeway Guide Signs	White legends; borders; and arrows;	ASTM Type XI	White
Freeway Guide Signs	Backgound including M8 series signs	ASTM Type IV	Green, Brown, or Blue
Non Freeway Guide Signs	All	ASTM Type IV	White on Green, Brown or Blue
Regulatory Signs	Stop, Yield, parking, black on white signs	ASTM Type IV	—
Route Markers	—	ASTM Type XI	—

919.03. Delineators. Fabricate reflectors for delineators from Type III aluminum substrate and reflective sheeting material for rigid post applications, or solely from reflective sheeting material for flexible post applications, as shown on the standard plans. Provide the Engineer a copy of the manufacturer's certification that reflectors and posts meet the requirements of this subsection.

A. **Aluminum Reflectors.** Reflectors for mounting on rigid post must consist of Type XI retroreflective sign sheeting applied to Type III aluminum substrate.

Fabricate the specified delineator reflector size(s) from the Type III aluminum substrate and round all exterior corners to a ¾ inch radius. Remove any burrs that form while rounding the corners. Apply the sign sheeting to cover the entire face of the aluminum substrate and ensure the sheeting is free of seams, wrinkles, bubbles, tears, gaps or other defects after the corners have been rounded and prior to the mounting holes having been cut. The mounting holes will be 3/8 inch in diameter and located per the standard plans. Two mounting holes will be cut in each delineator reflector. Remove burrs from the mounting holes.

B. **Reflective Sheeting Reflectors.** Provide reflective sheeting for mounting on flexible posts meeting the material, color, and resistance to weathering requirements of ASTM D4956 for Type XI flexible retroreflective sheeting.

Apply reflective sheeting in accordance with the manufacturer's specifications.

C. **Mounting Hardware.** Mounting hardware for aluminum reflectors must consist of either a drive rivet or bolt system.

Drive rivets may be either aluminum or stainless steel. For aluminum drive rivets, both the pin and the collar must meet the requirements of ASTM B308/B308M, *for aluminum alloy 6061*.

Bolts must be stainless steel and accompanied by a locknut to produce a vandal-resistant attachment. A nylon washer is also required to be placed between the bolt head and the face of the reflector to protect the sign sheeting.

Ensure that either system is of a large enough diameter that it will not be subject to pulling through the holes in the delineator reflectors or posts.

Alternative fastening systems may be approved by the Engineer provided they form a vandal-resistant attachment.

D. **Posts.** Provide rigid steel or flexible delineator posts. Steel delineator posts must have a nominal weight of 1.12 pounds per foot and meet the requirements of subsection 919.04 for steel posts. Select flexible delineator posts from the Qualified Products List.

919.04. Steel Post Sign Supports and Square Tubular Steel Sign Supports. Provide steel post sign supports and square tubular steel sign supports, including sign posts, anchor sleeves, and anchor posts, meeting the requirements of ASTM A702

A. **Steel Post Sign Supports.** Posts must be straight with a smooth, uniform finish, free of cracks, flaws, injurious seams, laps, blisters, ragged and imperfect edges, or other defects affecting the strength, durability, or appearance of the posts. Provide cross-section, bolt hole diameter and spacing meeting the requirements shown on the sign support standard plans. Align the centers of the holes to coincide with the centerline of the posts. The punched bolt holes must provide a smooth, even sign post face. Holes and cutoff ends must be free of burrs.

After fabrication and hole punching, hot-dip galvanize steel posts in accordance with subsection 907.03.D.

Provide punched and coated posts weighing at least 95 percent of the nominal weight shown on the plans.

B. **Square Tubular Steel Sign Supports.** Provide square tubular steel sign supports meeting the chemical, mechanical, and geometric properties of material used in the crash tests referenced in AASHTO Standard Specifications for Structural Supports for Highway Signs, Luminaries and Traffic Signals.

Sign posts, anchor sleeves, anchor posts, and connection hardware must be of the size and type shown on the MDOT Sign Support Standard Plans.

Provide straight sign posts, anchor sleeves, and anchor posts having a smooth uniform finish, free from cracks and flaws or other defects affecting their strength or durability. Provide cut square ends free from burrs.

Accurately space bolt holes, of the diameter specified, on all four sides of the sign post, anchor sleeve and anchor post. Line up holes exactly opposite each other on opposing sides of the post in order to accommodate a bolt placed through two opposite sides. Align the center of the holes with the centerline of the sign post, anchor sleeve and anchor post.

Punch the bolt holes so that the face of the sign post, anchor sleeve and anchor post will have a smooth even surface.

Hot-dip galvanize the sign post, anchor sleeve, and anchor post after fabrication and hole punching, in accordance with ASTM A123/A123M for Grade 65.

919.05. Sawed Wood Posts for Highway Signs. Provide sawed wood posts for highway signs meeting the requirements of section 912 and Sign Support Standard SIGN-210.

919.06. Steel Column Breakaway Sign Supports. Provide structural steel for column sign supports and bolts, nuts, and washers for the structural steel joints meeting the requirements of Sign Support Standard SIGN-220.

Provide steel shims meeting the requirements of ASTM A36/A36M and galvanize in accordance with ASTM A123/A123M.

919.07. Cantilever Sign Supports.

A. **Upright Column.** Provide pipe for the upright column of Type E cantilevers meeting the requirements of ASTM A53/A53M for Grade B, Type E or Type S steel pipe or meeting the requirements of API-5L for Grade X42 to X52. Provide pipe for the upright column of Type J cantilevers meeting the requirements of ASTM A53/A53M for Grade B, Type E or Type S steel pipe or meeting the requirements of API-5L Grade X42.

B. **Horizontal Arms.** Provide pipe for the horizontal arms of Type E cantilevers meeting the requirements of ASTM A53/A53M for Grade B, Type E or Type S steel pipe or meeting the requirements of API-5L for Grade X42 to X52. Provide pipe for the horizontal arms of Type J cantilevers meeting the requirements of ASTM A500/A500M, Grade B or ASTM A519/A519M, Grade 4140 annealed.

C. **Gussets, Flanges, and Base Plates.** Provide plate material for gussets, flanges, and base plates meeting the requirements of ASTM A36/A36M. Plates must be free of sharp edges and irregularities.

D. **Angles.** Provide angles meeting the requirements of ASTM A709/A709M, Grade 36 or ASTM A36/A36M.

E. **Pole and End Caps.** Provide pole and end caps meeting the requirements of ASTM A36/A36M.

F. **Arm Connection Bolts.** Provide high-strength bolts, nuts, washers and lock washers for arm connections meeting the requirements of subsection 906.07.

G. **Anchor Bolts.** Provide anchor bolts, nuts, and washers meeting the requirements of subsection 908.14.

H. **Dimension Tolerances.** Ensure cross sections, flatness, length, straightness, thickness, and camber of material, before and after fabrication, meet the tolerance requirements of ASTM A6/A6M and AWS D1.1/D1.1M.

I. **Galvanizing.** Galvanize cantilever sign supports galvanized in accordance with ASTM A123/A123M. Blast clean all components to remove excess mill scale and welding slag before galvanizing.

Provide safeguards meeting the requirements of ASTM A384/A384M and ASTM A385/A385M to obtain high quality galvanized coatings and minimize distortion and warpage during galvanizing.

Interconnect sections of fabricated pipe work or tube assemblies with open tee or miter joints and provide each enclosed section with a vent hole at each end to provide drainage for the molten zinc and to prevent hazard to personnel engaged in the galvanizing process.

919.08. Truss Sign Supports. Before applying dead loads, trusses must be cambered so the ordinate is within the allowable tolerances at the center of the assembled truss for the span length and type shown on the plans. Ensure bearing surfaces fully contact each other in the relaxed position before tightening the flange bolts. The fabricator will determine the method of cambering the structure, with the Engineer's approval, to ensure the method does not induce stress into the truss.

A. **Upright Column.** Provide hollow structural tubing for upright columns of Type C and D trusses meeting the requirements of ASTM A500/A500M for Grade B or API-5L for Grade X42 to X52. Provide pipe for upright columns of Type E trusses meeting the requirements of ASTM A53/A53M for Grade B, Type E or Type S steel pipe or the requirements of API-5L Grade X42.

B. **Horizontal Truss Boxes.** Provide pipe for the horizontal truss boxes of Type C and D trusses meeting the requirements of ASTM A53/A53M for Grade B, Type E, or Type S steel pipe or meeting the requirements of API-5L for Grade X42 to X52. Provide pipe for the horizontal arms of Type E trusses meeting the requirements of ASTM A500/A500M, Grade B or ASTM A519/A519M, Grade 4140 annealed.

C. **Gussets, Flanges, and Base Plates.** Provide plate material for gussets, flanges, and base plates meeting the requirements of ASTM A36/A36M. Plates must be free of sharp edges and irregularities.

D. **Angles.** Provide angles meeting the requirements of ASTM A709/A709M, Grade 36 or ASTM A36/A36M.

E. **Pole and End Caps.** Provide pole and end caps meeting the requirements of ASTM A36/A36M.

F. **Truss Box Connection Bolts.** Provide high-strength bolts, nuts, washers and lock washers for truss box connections meeting the requirements of subsection 906.07.

G. **Anchor Bolts.** Provide anchor bolts, nuts, and washers meeting the requirements of subsection 908.14.

H. **U-Bolts.** Provide U-bolts and washers meeting the requirements of ASTM A320/A320M, Grade B8, Class 1 stainless steel. Provide self-locking nylon insert-type nuts meeting the requirements of ASTM A320/A320M for Grade B8F.

I. **Dimension Tolerances.** Ensure cross sections, flatness, length, straightness, thickness, and camber of material, before and after fabrication, meet the tolerance requirements of ASTM A6/A6M and AWS D1.1/D1.1M.

J. **Galvanizing.** Provide galvanized truss sign supports in accordance with ASTM A123/A123M. Blast clean all components to remove excess mill scale and welding slag before galvanizing.

Provide safeguards meeting the requirements of ASTM A384/A384M and ASTM A385/A385M to obtain high quality galvanized coatings and minimize distortion and warpage during galvanizing.

Interconnect sections of fabricated pipe work or tube assemblies with open tee or miter joints and provide each enclosed section with a vent hole at each end to provide drainage for the molten zinc and to prevent hazard to personnel engaged in the galvanizing process.

919.09. Overhead Lane Assignment Structures. Provide overhead lane assignment structures meeting the requirements of Sign Support Standard SIGN-760 and traffic signal typical plans.

919.10. Casings for Cantilever Drilled Piles. Provide casings for cantilever drilled piles meeting the requirements of ASTM A252/A252M for Grade 2 steel. Casings must be smooth, watertight, and capable of withstanding handling stresses and external subsurface pressures. Provide casing with an outside diameter at least equal to the required shaft size.

Section 920. PERMANENT PAVEMENT MARKING MATERIALS

920.01. Marking Materials. Select pavement marking materials from the Qualified Products List.

When selecting preformed thermoplastic products, ensure preformed thermoplastic materials have a thickness of 90 mils for surface applications and a thickness of 125 mils for recessed applications.

For black liquid shadow markings and blue markings used in parking areas, choose a specified binder material and color from the Qualified Products List or select a white specified binder material from the Qualified Products List and tint the product to the appropriate color.

Use liquid applied pavement marking materials manufactured in the previous 12 months or within the shelf-life directed by the manufacturer, whichever is less. Use solid applied materials within the shelf-life directed by the manufacturer. Provide certification that liquid and solid applied pavement marking materials have been stored per the manufacturer's requirements. Materials not in compliance will be rejected and removed at the Contractor's expense.

A. **General Packaging and Labeling.** Material containers or packages must be marked on the tops and sides, using a durable, weather-resistant marking. Include the following information:

1. Manufacturer's name and address;
2. Description of the material;
3. Product identification number;
4. Lot or Batch number;
5. Date of manufacture;
6. Volume; and
7. Weight.

B. **Packaging and Labeling for Cold Plastic and Thermoplastic Markings.**

1. **Cold Plastic.** Containers or packages of cold plastic material and the core of each roll must be marked with the information specified in subsection 920.01.A.

2. **Thermoplastic.** In addition to the requirements of subsection 920.01.A, thermoplastic material must be packaged in non-stick containers, and labeled with "heat to manufacturer-recommended temperature range".

920.02. Glass Beads and Wet Reflective Optics.

A. **Packaging and Labeling.** Package glass beads and wet reflective optics in moisture resistant bags and label with the following information:

1. Manufacturer's name and address;
2. Shipping point;
3. Trademark or name;
4. The wording "Glass Beads" or "Optics";
5. Specification number;
6. Weight;
7. Lot or Batch number; and
8. Date of manufacture.

Drop-on AASHTO M247 Type I beads are herein referred to as standard glass beads. Large glass beads must meet federal specification TTB-1325 for a Type 4 glass bead. All glass beads and wet reflective optics to be used on Federal-aid projects must contain no more than 200 parts per million of arsenic or lead, as determined in accordance with Environmental Protection Agency testing methods 3052, 6010B, or 6010C.

B. **General Requirements for Standard Glass Beads.** Standard glass beads must meet the physical characteristics and gradation requirements specified in Table 920-1, unless otherwise specified in subsection 920.02.D for specific applications.

Table 920-1 General Requirements for Standard Glass Bead	
Physical characteristics (MTM 711)	
General Appearance	Transparent, clean, smooth, free from milkiness, pits, or excessive air bubbles
Shape	Spherical with ≥75% true spheres
Color	Colorless, very light gray, very light gray tinge, or bright white
Index of Refraction	≥1.50
Alkalinity	≤2.0
Gradation Requirements (MTM 711)	
Sieve Size (No.)	**Total Percent Passing**
20	100
30	75–95
50	15–35
100	0–5

C. **General Requirements for Wet Reflective Optics.** Provide wet reflective optics meeting the retroreflectivity requirements specified in Table 920-2.

Prior to application, submit certification from the wet reflective optics manufacturer that when applied according to their application recommendations, the wet reflective optics meet the requirements in Table 920-2.

Table 920-2 General Wet Reflective Optic Requirements		
Average Initial Retroreflectivity at 30 meter geometry in mcd/lux/m^2		
Test Method	Color	
	White	Yellow
Dry (ASTM E1710)	700	500
Wet Recovery (ASTM E2177)	250	200
Wet Continuous (ASTM E2832)	100	75

D. **Standard Glass Bead and Wet Reflective Optic Requirements for Specific Applications.**

1. For recessed longitudinal markings, use a double drop system of large and standard glass beads, a double drop system of wet reflective optics and standard glass beads, or an Engineer-approved alternate. Ensure large glass beads meet federal specification TTB-1325 for a Type 4 glass bead.

2. **Waterborne and Low Temperature Waterborne.** Standard and large glass beads for use with waterborne marking material and low temperature waterborne marking material require a moisture resistant coating and a silane coating. The type, gradation, and application rates for wet reflective optics used with waterborne and low temperature waterborne marking materials must meet the waterborne manufacturer's recommendations.

3. **Regular Dry.** Standard and large glass beads for use with regular dry marking material may have a moisture resistant coating, a silane coating, or both. The type, gradation, and application rates for wet reflective optics used with regular dry marking materials must meet the regular dry manufacturer's recommendations.

4. **Thermoplastic.** Standard and large glass beads for thermoplastic marking material must have a moisture resistant coating. The type, gradation, and application rates for wet reflective optics used with thermoplastic marking materials must meet the thermoplastic manufacturer's recommendations.

5. **Sprayable Thermoplastic.** The type, gradation, and application rates for all standard and large glass beads and wet reflective optics used with sprayable thermoplastic marking material must meet the sprayable thermoplastic manufacturer's recommendation.

6. **Polyurea.** The type, gradation, and application rates for all standard and large glass beads and wet reflective optics used with polyurea marking material must meet the polyurea manufacturer's recommendation.

7. **Modified Epoxy.** The type, gradation, and application rates for all standard and large glass beads and wet reflective optics used with modified epoxy marking material must meet the modified epoxy manufacturer's recommendation.

Section 921. PERMANENT TRAFFIC SIGNAL MATERIALS

921.01. Sampling and Testing.

A. **General.** The Department may select permanent traffic signal materials covered by this section at random from shipments and test in accordance with Department methods. If requested by the Department, complete one installation for preliminary testing. If the preliminary sample does not meet the requirements of this section, the Department will notify the Contractor, in writing, of deficiencies so the Contractor may make the necessary changes or corrections in materials or installation methods. The Department may re-test traffic signal materials after the Contractor makes the necessary changes or corrections.

B. **Loop Detectors.** The Department will randomly select one or more loop detectors from the shipment and perform testing as specified in subsection 921.01.A. If the one tested loop detector meets the requirements of subsection 921.01.A, the Department will give the Contractor written notification to provide the remainder of the order, which will be subject to testing.

If the preliminary sample does not meet to the requirements of subsection 921.01.A, the Department will notify the Contractor, in writing, of deficiencies so the Contractor may make changes or corrections in materials or installation methods. All loop detectors will then be subject to testing. If the Contractor does not, or cannot make corrections, the Department will require the Contractor to provide materials from other sources in accordance with section 105.

C. **Warranty.** Provide materials with a manufacturer's guarantee or warranty, transferable to the Department, that the material is free of defects in materials and workmanship for a specified period from the date of installation. Provide the Engineer with the manufacturer's guarantee or warranty documents and a copy of the invoice showing date of shipment.

921.02. Messenger Wire and Span Wire. Use extra high-strength Grade, 7-wire, Class A, zinc-coated steel, meeting the requirements of ASTM A475.

A. Provide messenger wire with a nominal diameter of ¼ inch for supporting traffic signal cables. Self-supporting figure-8 type cable shall incorporate a 1/4" messenger wire.
B. Provide span wire with a nominal diameter of 5/16 inch for supporting a traffic signal, case sign, and cable. Messenger wire is incidental to the traffic signal installation.

921.03. Vehicular Traffic Signals and Mounting Assemblies. Unless otherwise required, provide traffic signals meeting the requirements of the Institute of Traffic Engineers (ITE) Standard, the *Standard for Adjustable Face Vehicle Traffic Control Signal Heads, Vehicle Traffic Control Signal Heads* (VTCSH), Light Emitting Diode (LED) Circular Signal Supplement, and the LED Vehicle Arrow Traffic Signal Supplement.

Provide adjustable face-type traffic signals with 12 inch diameter lenses. Provide signal sections of the same make and type to ensure they are interchangeable. Signal faces include LED traffic

signal modules for ball lenses, arrow lenses, or both, socket assembly gaskets, reflector and door assembly, housing, visors, optical units, wiring, and mounting assembly. Provide LED vehicular traffic signals compatible in new installations, or as a retrofit unit capable of replacing the optical unit of existing vehicular traffic signal sections meeting all standards and requirements..

A. **Housing.** Provide polycarbonate plastic housing. Provide each signal body with a 2 inch diameter hole in the top and bottom to receive 1½ inch diameter supporting pipe. Provide AISI Series 300 stainless steel fasteners if at least partially exposed on the exterior of the assembled housing. Provide AISI Series 300 stainless steel screws, bolts, nuts, and hinge pins for the interior of the housing. Provide other hardware used on the interior in AISI Series 300 stainless steel, brass, or aluminum. Do not use plastic fasteners to secure the door.

B. **Visor.** Provide each signal face with a detachable tunnel design visor for each signal lens. Provide a visor from 9 inches to 12 inches long for 12 inch lenses. Provide a visor that encloses at least 290 degrees of the lens circumference and tilts downward from 1 degree to 10 degrees. Provide a one piece solid polycarbonate circular visor at least 0.078 inch thick. Attach the visor to the signal section.

C. **LED Module and Signals.** LED signals and modules include circular and arrow modules, unless otherwise specified.

Provide new Department-approved LED signal of the latest model currently in production. Equipment that is no longer manufactured is not acceptable, even if it meets the requirements of this subsection. Install all LED signals produced by the same manufacturer at one location.

1. **Physical and Mechanical Requirements.** Provide self-contained sealed LED module units consisting of a lens, color coded leads with pre-insulated spade lugs, a LED assembly, a power supply and a one piece neoprene gasket. Use material for the lens and module construction that meets ASTM requirements. Provide enclosures to contain the power supply or electronic components for the signal module made of UL94 flame retardant material. If retrofitting into existing traffic signal housing, provide the LED module with a new signal door and visor assembly.

   The LED module and the internal LED and electronic components must withstand mechanical shock and vibration in accordance with MIL STD 883, Test Method 2007. Verify that the LED vehicle signal manufacturer is ISO 9001 certified.

   Provide an LED signal module that protects against dust and moisture intrusion in accordance with MIL STD 810F, Procedure I, “Rain and Blowing Rain” testing. Conduct the test on stand-alone units with no protective housing.

   Provide an LED signal module lens made from ultraviolet stabilized polycarbonate. Use lenses that are color tinted red, yellow, and green to match the color of the LEDs. Provide lenses that do not require special tools for replacement. Provide a hard-coated lens, or a lens

that otherwise complies with the material exposure and weathering effects requirements of SAE J576. Attach the lens to the signal body and apply a waterproof silicone seal.

Provide lenses for vehicle signals with smooth external lens surfaces and no raised features to minimize collection of dirt, diesel smoke and other particulate contaminates and to facilitate periodic cleaning.

Ensure each signal module identifies the manufacturer's name, model number, serial number, related voltage, and power consumption on the outside of the unit. Attach the identification tag using polyester or vinyl self adhesive labels and make visible without disassembly of the signal module. Do not use paper labels.

For each LED signal module, provide a prominent and permanent vertical indicator for the orientation of the module inside the traffic signal housing.

Provide LED modules that incorporate a dual lens approach using a single inner collimating lens and a single outer spreading lens. Provide an inner Fresnel lens that collimates the light emitted by the LED and spans the full diameter of the interior of the signal. Provide an outer lens that distributes the light rays through raised optical detail on the inner surface to meet the intensity and distribution standards specified in this section.

Provide LED modules that incorporate two separate printed circuit boards, one for the LED light source, and one for the power supply. Provide LED modules consisting of high flux LEDs mounted on a metal core circuit board using thermal epoxy and LED electrical contacts soldered to the circuit board. Place a single layer of thermal transfer material between the metal core printed circuit board and the module heat sink to ensure optimum heat transfer away from the LED P-N junctions.

Provide a lens assembly that disperses the light to prevent visibility of individual LEDs from vehicles.

Provide watertight LED signals when installed in traffic signal housing. Provide the same mounting hardware for LED signal modules as used to secure incandescent lens and gasket assemblies. Ensure installation only requires a screwdriver or standard installation tool. Provide an LED signal module assembly that weighs less than 5 pounds.

Mount and solder the LED arrow module to a printed circuit board. Provide an LED arrow module that uses a single outer lens that spreads and diffuses light from the LEDs. Incorporate a black arrow mask behind the outer lens to enhance the definition of the arrow icon. Provide an outer lens with raised optical detail on the inner surface to distribute the light rays to meet the intensity and distribution standards required by this subsection.

2. **Electrical Requirements.** Provide LED signal modules that operate from a 60-hertz line frequency and over a voltage range from 80 volts to 135 volts. The Engineer will allow a change of luminous intensity no greater than 10 percent over the voltage range.

   Provide an LED signal module capable of operating over a temperature range from −40 °F to 165 °F.

   Provide each LED signal module with two color-coded, No. 18 gauge minimum, anti-capillary 39 inch long, 600 volt, jacketed wires, conforming to the requirements of the NEC, rated for service at 221 °F. Provide the LED module wire leads with insulated spade lug terminals for connecting to existing traffic signal terminal blocks.

   Provide LED signal modules with voltage surge protection to withstand high repetition noise transients and low-repetition, high-energy transients, in accordance with NEMA Standard TS-2.

   Provide LED circuitry that prevents flicker at less than 100 hertz over the voltage range from 80 volts to 135 volts in accordance with ITE VTCSH.

   Provide LED signals and associated on-board circuitry meeting Federal Communications Commission (FCC) Title 47, Subpart B, Section 15 regulations concerning the emission of electronic noise by Class A digital devices.

   Ensure a power factor of at least 90 percent, at nominal rated voltage, at 77 °F. Ensure a total harmonic distortion (THD) of less than 20 percent at rated voltage, at 77 °F.

   Ensure the failure of a single LED will not cause a loss of light from other LEDs. Provide LED ball lamps that do not lose light output from the complete module assembly as a result of the failure of a single LED.

   Provide an LED module that will detect catastrophic loss of the LED load. Provide a module which, upon sensing the loss of the LED load, presents a resistance of at least 250 kilo ohms across the input power leads within 300 millisecond. Catastrophic failure of an LED light source is if it fails to show visible illumination when energized in accordance Section 5.2.1 of the ITE VTCSH LED Circular Signal Supplement, dated June 27, 2005, after 75 milliseconds or Section 5.7 of the LED Vehicle Arrow Traffic Signal Supplement dated April 3, 2006.

   Provide an LED signal module that is operationally compatible with current controller assemblies, including solid state load switches, flashers, and conflict monitors.

   Wire the LED modules with at least No. 18 AWG, color coded thermoplastic insulated wire.

   Provide a six point terminal block with stainless steel or chrome-plated brass screw terminals, for spade lugs of brass, stainless steel, or other non-corrosive material, for connecting wires

from the LED module and the cable from the signal controller. Mount the terminal block in the center section of the signal face and provide at least 1 inch lateral clearance from the housing. Install the terminal block with stainless steel screws.

Mount and locate the terminal block, and other appurtenances, in the housing to minimize the danger of electrical shock during maintenance activities.

3. **Power Consumption and Operational Range.** Provide LED traffic signal modules that meet the minimum intensity requirements while operating from temperatures of −40 °F to 165 °F for 5 years.

   Provide high flux LED capable of being driven continuously at a current of at least 350 milli-amperes with a power dissipation rating of at least 1 watt.

   Provide LEDs that do not illuminate for input voltages below 35 volts, but do illuminate for input voltages greater than 45 volts, and are regulated above 80 volts.

   Provide LED modules for traffic signals with the following maximum power consumption:

   a. 8-inch and 12-inch red ball traffic signal modules with a maximum power consumption no greater than 6 watts and 9 watts respectively, at 120 VAC, at 77 °F;
   b. 8-inch and 12-inch yellow ball traffic signal modules with a maximum power consumption no greater than 13 watts and 19 watts, respectively, at 120 VAC, at 77 °F;
   c. 8-inch and 12-inch green ball traffic signal modules with a maximum power consumption no greater than 6 watts and 12 watts, respectively, at 120 VAC, at 77 °F;
   d. 12-inch red arrows with a maximum power consumption no greater than 7 watts at 120 VAC, at 77 °F;
   e. 12-inch yellow arrows with a maximum power consumption no greater than 9 watts at 120 VAC, at 77 °F; and
   f. 12-inch green arrows with a maximum power consumption no greater than 7 watts at 120 VAC, at 77 °F.

   Ensure each LED module reaches 90 percent full illumination within 75 milliseconds of applying the nominal operating voltage. Ensure modules do not show visible illumination after 75 milliseconds of removing the nominal operating voltage.

   Provide red LEDs that use exclusively aluminum indium gallium phosphide technology, either absorbing substrate or transparent substrate, and do not exhibit degradation greater than 30 percent of the initial light intensity following accelerated life testing (operating at 185 °F and 85 percent humidity for 1,000 hours). Do not use aluminum gallium absorbing substrate technology.

   Provide green LEDs that use indium gallium nitride technology. Provide green LED traffic signal modules that do not illuminate if the applied voltage is less than 35 VAC. Provide green

LEDs that illuminate, unregulated, if the applied voltage is from 45 VAC to 80 VAC. Provide green LEDs that illuminate in accordance with the ITE VTCSH, Part II, if applied voltage is from 80 VAC to 135 VAC.

Provide yellow LEDs that use aluminum indium gallium phosphide technology, absorbing substrate or transparent substrate. Provide yellow LED traffic signal modules that do not illuminate if the applied voltage is less than 35 VAC. Provide yellow LEDs that illuminate, unregulated, if the applied voltage is from 45 VAC to 80 VAC. Provide yellow LEDs that illuminate in accordance with the ITE VTCSH if applied voltage is from 80 VAC to 135 VAC.

Provide LED modules operationally compatible with NEMA TS-1 and NEMA TS-2 conflict monitoring parameters.

4. **Photometric Requirements.** Refer to Section 4, Table 1 of the ITE VTCSH LED Circular Signal Supplement dated June 27, 2005, and the LED Vehicle Arrow Traffic Signal Supplement, dated April 3, 2006, for the minimum initial luminous intensity values for the LED traffic signal module.

   Ensure the actual luminous intensity for a module does not exceed three times the required peak value of the minimum maintained luminous intensity for the signal size and color, if operated within the temperature range specified in Section 3.3.2 of the ITE VTCSH LED Circular Signal Supplement dated June 27, 2005, and the LED Vehicle Arrow Traffic Signal Supplement dated April 3, 2006.

   Ensure the uniformity of the signal output across the module lens does not exceed a ratio of 10:1 from the maximum to minimum luminance values.

   Provide LED modules with surfaces that appear uniform in illumination. Eliminate the visibility of individual LEDs to the motorist.

   Ensure the measured chromaticity coordinates of LED traffic signal modules conform to the color regions based on the 1931 CIE chromaticity diagram listed in the ITE VTCSH LED Circular Signal Supplement dated June 27, 2005.

   Ensure the dominant wavelength for individual color measurements of portions of the emitting surface of a module are within 3 nanometers of the dominant wavelength for the average color measurement of the entire emitting surface.

   Provide LED modules operationally compatible with NEMA TS-1 and NEMA TS-2 conflict monitoring parameters.

   Provide LED traffic signal modules that meet the minimum luminous intensity values listed in Table 921-1 for circular modules, or Table 921-2 for arrow modules, for 60 months.

Table 921-1 Minimum Maintained Luminous Intensity Values — VTCSH LED Circular Signal							
Vertical Angle (°)	**Horizontal Angle (°)**	**Luminous Intensity (candela)** (a) (b)					
		8 in			**12 in**		
		Red	**Yellow**	**Green**	**Red**	**Yellow**	**Green**
+12.5	2.5	17	41	22	37	91	48
	7.5	13	33	17	29	73	38
+7.5	2.5	31	78	41	69	173	90
	7.5	25	62	32	55	137	71
	12.5	28	45	24	40	100	52
+2.5	2.5	68	168	88	150	373	195
	7.5	56	139	73	124	309	162
	12.5	38	94	49	84	209	109
	17.5	21	53	28	47	118	62
	22.5	12	29	15	26	64	33
−2.5	2.5	162	402	211	358	892	466
	7.5	132	328	172	292	728	380
	12.5	91	226	118	201	501	261
	17.5	53	131	69	117	291	152
	22.5	28	70	37	62	155	81
	27.5	15	37	19	33	82	43
−7.5	2.5	127	316	166	281	701	366
	7.5	106	262	138	234	582	304
	12.5	71	176	92	157	391	204
	17.5	41	103	54	91	228	119
	22.5	21	53	28	47	118	62
	27.5	12	29	15	26	64	33
−12.5	2.5	50	123	65	110	273	143
	7.5	40	98	52	88	218	114
	12.5	28	70	37	62	155	81
	17.5	17	41	22	37	91	48
	22.5	8	21	11	18	4	24
	27.5	5	12	6	11	27	14
−17.5	2.5	23	57	30	51	127	67
	7.5	18	45	24	40	100	52
	12.5	13	33	17	29	73	38
	17.5	7	16	9	15	36	19
	22.5	3	8	4	7	18	10
−22.5	2.5	17	41	22	37	91	48
	7.5	13	33	17	29	73	38
	12.5	10	25	13	22	55	29
	17.5	5	12	6	11	27	14
−27.5	2.5	12	29	15	26	64	33
	7.5	8	21	11	18	46	24

a. Luminous intensity values for equivalent left and right horizontal angles are the same.
b. Tabulated values of luminous intensity are rounded to the nearest whole value.

Table 921-2 Minimum Maintained Luminous Intensity Values for the VTCSH LED Vehicle Arrow Traffic Signal				
Vertical Angle (°)	**Horizontal Angle (°)**	**Luminous Intensity (candela)** (a) (b)		
		12 in arrow		
		Red	**Yellow**	**Green**
+12.5	2.5	6	15	8
	7.5	5	12	6
+7.5	2.5	11	28	14
	7.5	9	22	11
	12.5	6	16	8
+2.5	2.5	24	60	31
	7.5	20	49	26
	12.5	13	33	17
	17.5	8	19	10
	22.5	4	10	5
−2.5	2.5	57	143	75
	7.5	47	116	61
	12.5	32	80	42
	17.5	19	47	24
	22.5	10	25	13
	27.5	5	13	7
−7.5	2.5	45	112	59
	7.5	37	93	49
	12.5	25	63	33
	17.5	15	36	19
	22.5	8	19	10
	27.5	4	10	5
−12.5	2.5	18	44	23
	7.5	14	35	18
	12.5	10	25	13
	17.5	6	15	8
	22.5	3	7	4
	27.5	2	4	2
−17.5	2.5	8	20	11
	7.5	6	16	8
	12.5	5	12	6
	17.5	2	6	3
	22.5	1	3	2
−22.5	2.5	6	15	8
	7.5	5	12	6
	12.5	4	9	5
	17.5	2	4	2
−27.5	2.5	4	10	5
	7.5	3	7	4

a. Luminous intensity values for equivalent left and right horizontal angles are the same.
b. Tabulated values of luminous intensity are rounded to the nearest whole value.

D. **Electrical Wiring.** Provide stranded wire electrical wiring meeting the requirements of ITE Standards.

Electrically and mechanically secure the wiring by fastening to the lamp receptacle. Insulate exposed, current carrying parts. Use pre-insulated fork-type terminals on the wires at the terminal block connection.

Do not use pressure type terminal blocks.

E. **Mounting Assemblies.** Provide mounting assemblies that include the hardware for complete assembly of the signal.

1. **Pipe.** For mounting assemblies, use rigid conduit of 1 ½" standard steel pipe with straight threads. Do not use straight threads. Install plastic thread protectors for exposed pipe threads to protect the threads during shipping.

2. **Hub or Center Fitting.** Provide a hub of malleable iron with a nominal 3 inch by 3 inch opening to draw wires and make connections. Secure the cover for the opening with two ⅜-inch by ½-inch hexagon head, 300 Series stainless steel screws. Close unused openings in the hub with ferrous or aluminum ornamental closures.

3. **Arms.** Provide pipe arms from the center hub to position the centers of the signal face housings on a radius of 8¾ inches ±¼ inch from the hub for 8-inch signals, and a radius of 10¾ inches ±¼ inch from the hub for 12-inch signals.

4. **Fittings.** Use ferrous pipe crosses to make right angles in mounting frames. Close unused openings of the pipe crosses with ornamental closures. Do not use set screws in pipe crosses.

   Provide malleable iron fittings free of flash and voids.

5. **Assemblies.** Construct the signal stem of 1½-inch standard steel pipe and fittings. Install reinforcing plates in the top and bottom of all signals equipped with back plates. Do not use rivets.

6. **Finish.** Provide pipes and fittings with internal surfaces that are free of sharp edges and burrs.

7. **Cable Entrance Fitting.** Provide fittings of one-piece construction, made of malleable iron. Provide the wire outlet with a composition bushing with opening to accommodate a multi-conductor cable, 1 inch in diameter. Provide the threaded end of the fitting with a threaded nipple, two 1½-- inch malleable iron locknuts, and a stainless steel cotter key.

8. **Span Wire Fitting.** Provide fittings of malleable iron to accommodate ¼-inch to ⅜-inch messenger wire with a 1⅝ inch diameter pin and $^{3}/_{32}$-inch by 1-inch stainless steel cotter key. Locate the pin $3^{7}/_{16}$ inches from where the span cable seats into the saddle part of the fitting. Provide a saddle part 9 inches long. Bottom tethering span assemblies will have breakaway attachment points on both ends.

9. **Span and Cable Entrance Assembly.** Provide a span and cable entrance assembly that allows the signal assembly to swing in any direction and return to the vertical position without placing stress on the span wire.

10. **Signal Head Attachment.** Provide the top outlet of each signal bracket with a nipple and either a watertight metal gasket with retainer to restrict the flow of the gasket or one flat stainless steel washer and one malleable iron hexagon nut, ½ inch thick.

    Provide a nipple to allow the use of the gasket or nut and washer.

F. **Paint and Color.**

1. **Mounting Assemblies.** Clean and surface treat the surfaces of mounting assemblies in accordance with standard industry practice, to ensure bonding of the paint to the metal. After preparation, paint surfaces with durable weather resistant semi-gloss or gloss yellow enamel.

   Apply the enamel at an average dry film thickness of 1.5 mils, without blisters, runs, or other defects. Determine the dry film thickness using Method A, Inductance Thickness Gauge, as specified in ASTM D1400. Ensure the color matches the central color within the limits shown on the current FHWA Highway Yellow Color Tolerance Chart, except do not use a color darker than the central color.

2. **Signal Faces.** Provide signal faces with the yellow color specified in subsection 921.03.F.1, permanently molded into the signal door, housing, and visors. Provide the inside of the visors with a finish coat of flat black paint, compatible with polycarbonate plastic.

G. **Packing and Marking.** Pack each traffic signal separately to prevent damage to the signal and mounting assembly during transportation to the project. Legibly mark each carton with the signal and mounting assembly description and supplier's name.

H. **Quality Assurance.** Provide LED modules that comply with the quality assurance production testing, inspection, and design, as specified in the ITE VTCSH, LED Circular Signal Supplement dated June 27, 2005, and LED Vehicle Arrow Traffic Signal Supplement dated April 3, 2006.

I. **Tests, Inspection, and Sampling.** Test each LED module and inspect before shipment. Reject pieces of equipment that fail to meet the requirements of this section.

J. **Drawings and Information.** Provide two copies of drawings of the signal head and LED module showing manufacturer's part numbers.

Provide the independent test lab reports showing that proposed material meets or exceeds the requirements of this section and Quality Assurance Testing and Inspection per Section 6 of the ITE VTCSH, LED Circular Signal Supplement dated June 27, 2005 and LED Vehicle Arrow Traffic

Signal Supplement dated April 3, 2006. Failure to provide the independent lab test reports will be cause for rejection.

The Engineer will hold the information required by this subsection, along with a sample, if requested, as standards for acceptance.

921.04. Pedestrian Signals and Countdown Type. Provide pedestrian signals and countdown pedestrian signals meeting the requirements of the ITE Standard for "Adjustable Face Pedestrian Signal Heads" and the "LED Performance Specifications of the Pedestrian Traffic Control Signal Indications (PTCSI)" Part 2, "Pedestrian Traffic Signal Modules." The pedestrian signal indications include the LED signal modules, countdown, socket assembly gaskets, reflector and door assembly, housing, visors, optical units, wiring, and mounting assemblies.

Provide LED pedestrian signal modules capable of displaying the ITE specified symbolic full icon "hand" or "walking person" legends, using a one-piece section that includes a nominal message-bearing surface size of 12 inches by 12 inches.

Provide LED countdown pedestrian signal modules capable of exhibiting two, seven-segment digital numerical digits that display the remaining time to clear the intersection, and the traditional full icon "hand" or "walking person" legends using a one-piece section that includes a nominal message-bearing surface size of 16 inches by 16 inches.

A. **Housing.** Provide housing for each section as a one-piece, black polycarbonate resin material with front, sides, top, and bottom integrally molded. Provide housing at least $^{3}/_{32}$ inch thick, ribbed to produce a strong assembly and lightweight. Provide two sets of internal bosses in the section for mounting terminal strip facilities horizontally. Attach a six-position terminal block with screw terminals for spade lugs to bosses with two self-tapping stainless steel screws.

Provide a 2 inch diameter round hole in the top and bottom of each signal section to receive a 1½-inch supporting pipe. After assembling the sections, ensure a 1-inch cable can pass through the head without damage or excessive labor.

Provide a variable pressure-type door latch, bolt and wing nut, of American Iron and Steel Institute (AISI) 300 Series stainless steel, or approved equal.

Provide signal sections with a "hand" and "walking person" symbolic icon signal face of an over-all height of at least 14 inches.

For fasteners partially or fully exposed on the exterior of the assembled housing, provide AISI 300 Series stainless steel fasteners. For other screws, bolts, nuts, and hinge pins on the interior of the housing, provide AISI 300 Series stainless steel, brass or aluminum fasteners. Do not use plastic fasteners to secure the door.

B. **Visor.** Provide signal heads with visors that encompass the top and two sides of the lens for each signal indication. Provide a visor made of black polycarbonate resin at least 0.070 inch thick, attached to the door and signal section with at least four AISI 300 Series stainless steel screws. Provide a visor that fits tightly against the door and does not allow perceptible filtration of light between the door and the visor. Provide a visor that is detachable and 10 inches long or 6¾ inches long for countdown pedestrian signals. Provide a visor mounting system allows handling of the signal head by the visor.

C. **LED Module.** Provide new LED pedestrian signals of the latest models currently in production. The Engineer will not accept equipment no longer manufactured, even if it meets the requirements specified in this subsection. Install all LED signals produced by the same manufacturer in one location.

Provide LED pedestrian signals that achieve the minimum intensity requirements of the ITE photometric test criteria.

1. **Physical and Mechanical Requirements.**

a. **General.** Make each LED module a self-contained unit.

The LED module and the internal LED and electronic components must withstand mechanical shock and vibration. Ensure the LED signal manufacturer is ISO 9001 certified.

Provide an LED module that protects against dust and moisture intrusion in accordance the requirements of MIL 810F, Procedure I, “Rain and Blowing Rain” testing. Conduct the test on a stand-alone unit, with no protective housing required.

Provide an LED signal module made of ultraviolet, stabilized polycarbonate. Provide LED signal modules with a lens that is tinted or uses transparency film, or materials with similar characteristics. If requested by the Engineer, use a surface coating or film on a non fused polymeric lens to provide front surface abrasion resistance.

Provide pedestrian signals with smooth external lens surfaces with no raised features, to minimize the collection of dirt, soil, diesel smoke, and other particulate contaminates, and facilitate periodic cleaning.

Identify each LED signal module with the manufacturer’s name, model number, rated voltage, power consumption and serial number on the outside of the unit. Ensure the identification tag is visible without disassembling the signal module.

Provide LED signal modules with a prominent and permanent vertical indication to orient the module inside pedestrian signal housing.

b. **LED Assembly.** Provide LED assemblies that consist of an LED array mounted to a printed circuit board and sealed in a polycarbonate cover assembly. Secure the cover assembly to a 12-inch polycarbonate, or 16-inch for countdown, clear matte signal lens. Provide the assembly with No. 18 AWG, anti-capillary, 39-inch, color-coded leads, meeting the requirements of the NEC with insulated spade lug terminals for attachment to the signal terminal block.

The retrofit assembly requires removal of the existing housing and mounting assembly and reconfiguration of the mounting brackets to accommodate the one piece LED pedestrian signal housing.

Provide retrofit replacement modules, built for the PTCSI sizes of the "hand" and "walking person" icon pedestrian standards that fit into existing signal housings, without modifying the housing.

Provide enclosed units that do not expose circuit boards with LEDs. Do not use screw-in type products.

c. **LED Array.** Provide LED arrays that consist of a highly visible full icon symbol of the "hand" and "walking person." Use a "hand" symbol that is at least 9 inches tall and consists of Portland Orange LEDs. Use a "walking person" symbol that is at least 9 inches tall and consists of Lunar White LEDs. Provide symbols that are at least 5¼ inches wide. Provide at least No. 18 AWG wires with thermoplastic insulation.

Provide an LED countdown array that consists of a highly visible full icon symbol of the "hand" and "walking person". Ensure the "hand" symbol is at least 11 inches tall and consists of Portland orange LEDs. Use a "walking person" symbol that is at least 11 inches tall and consists of Lunar White LEDs. Provide symbols that are at least 6½ inches wide. Provide units with countdown digits that are at least 9 inches tall and consist of two rows of Portland orange LEDs. Provide at least No. 18 AWG wires with thermoplastic insulation.

Provide Portland orange T-1 LEDs that use aluminum indiun gallium phosphate technology, 605 nanometers. Provide white T-1 LEDs that use indium gallium nitride technology.

2. **Electrical Requirements.** The minimum performance requirements for LED pedestrian signals and countdown modules include the following:

a. LED signal modules that operate from a 60 hertz line frequency, over a voltage range from 80 VAC to 135 VAC, with a luminous intensity change no greater than ±10 percent.
b. Provide a nominal operating voltage of 120 VAC root mean square (RMS) for all measurements.
c. Each LED signal module has two color coded, minimum No. 18 AWG, 39 inch, 600 volt, jacketed wires, meeting the requirements of the NEC, and rated for service at 221 °F.

Provide the wire leads with pre-insulated spade lug terminals for connecting to existing traffic signal terminal blocks.

d. LED signal modules include voltage surge protection to withstand high repetition noise transients, and low repetition, high energy transients as specified in Section 2.1.8 of NEMA Standard Publication TS-2.
e. LED circuitry prevents flicker at less than 100 Hertz over the voltage range specified in Section 5.2 of the LED Performance Specifications.
f. LED signals and associated on-board circuitry meet the requirements of FCC Regulations Title 47, Sub Part B, Section 15 concerning electronic noise emissions.
g. LED modules provide a power factor of at least 90 at the nominal rated voltage, at 77 °F. The total harmonic distortion is less than 20 percent at the rated voltage, at 77 °F.
h. LEDs are connected in series parallel strings so LED burnouts result in a single point failure. The current draw ensures compatibility and proper triggering and operation of load switches.
i. The maintained minimum luminance value for the LED modules' "walking person" icon remains at 2,200 candelas per square meter for at least 60 months.
j. The maintained luminance value for the LED modules' "hand" icon remains at 1,400 candelas per square meter for at least 60 months.
k. Each module icon reaches 90 percent full illumination within 75 milliseconds of applying the nominal operating voltage.
l. Modules do not illuminate after 75 milliseconds of removing the nominal operating voltage.

Provide a six-point terminal block with stainless steel or chrome plated brass screw terminals for spade lugs for connecting wires from the LED module and incoming wires from the controller. Centrally locate the terminal block in the housing and provide at least 1 inch lateral clearance from the housing.

3. **Power Consumption and Operational Range.** Provide LED pedestrian traffic signals that consume no more than 8 watts for the "hand" icon, 10 watts for the "walking person" icon, and 8 watts for the countdown digits, at 120 VAC, 0.90 power factor at 77 °F.

   Provide LED signals that operate over a temperature range from −40 °F to 165 °F, with no more than a 10 percent change in luminous intensity over the required voltage range.

   Ensure the luminance uniformity of the "walking person" and "hand" icons does not exceed a ratio of 1:10 from the minimum to maximum luminance values, as measured in ½ inch diameter spots.

   If operating within the temperature range, ensure the luminance of the module does not exceed three times the minimum luminance of the modules.

   Provide LED pedestrian countdown modules with a uniform appearance when illuminated. Provide LED pedestrian countdown modules that do not present a pixilated appearance.

4. **Photometric Requirements.** Provide the minimum initial luminous intensity values for the LED traffic signal module specified in Section 4 of the LED Performance Specifications.

   Provide LED pedestrian signal modules meeting the minimum intensity requirements while operating over a temperature range from −40 °F to 165 °F.

   Provide LED traffic signal modules with measured chromaticity coordinates that meet the requirements of Section 4 of the LED Performance Specifications.

   Retain a certified independent test lab to provide test data to verify that pedestrian signal performance meets the requirements of Section 6 of the LED Performance Specifications. To test, control and monitor the "walking person," "hand," and countdown digits separately, provide three wires for electrical connection to the "walking person" and "hand."

5. **Countdown Timer.** Provide a micro-controller based countdown timer. Provide a timer that counts down only during the pedestrian clearance intervals, continuously monitors the pedestrian clearance interval, and automatically adjusts for changes made at the controller. If the flashing "hand" icon becomes solid, ensure the module displays a zero for 1 second and then blacks out. Ensure the countdown display remains dark until the beginning of the next countdown.

   If a pre-emption sequence begins, ensure the countdown module skips the pre-empted clearance time and reaches zero at the same time as the flashing "hand" becomes solid. In the cycle following a pre-emption call, ensure the signal displays the correct time. Ensure the countdown remains synchronized with the signal indications and always reaches zero at the same time the flashing "hand" becomes solid.

   Provide the LED module with a removable plug on the rear of the unit to allow access to dip switches for selecting the following features:

   a. 1 – Display zero during stand by;
   b. 2 – Turn on LEDs for testing;
   c. 3 – Countdown walk, plus clearance time; and
   d. 4 – Disable countdown display.

   Provide the countdown module with an internal conflict monitor to prevent conflicts between the "walking person" and the "hand" icons and the countdown digits display. Provide a conflict monitor that prevents the display from counting down during a steady "hand" indication.

D. **Electrical Wiring.** Provide electrical wiring that consists of stranded wire, meeting the requirements of the ITE VTCSH. Equip each pedestrian signal with a barrier-type terminal block with at least three terminals, one for each optical unit and one common terminal.

Mount the terminal block so it does not interfere mechanically with other components of the signal. Electrically and mechanically secure the wiring to a lamp receptacle. Insulate exposed current-carrying parts to prevent electrical shock hazard. Use pre-insulated fork-type terminals on the wires at the terminal block connection. Do not use pressure-type terminal blocks.

E. **Mounting Bracket Frame Assembly and Fitting.** Construct the mounting frame assembly and fittings entirely weather-tight. Reference MDOT typical signal construction details to reflect the straight arm length needed for the countdown pedestals. Provide arms for the mounting assembly of 1½-inch standard steel pipe to provide the following dimensions, within a tolerance of ¼ inch:

1. For overhead and pedestal mountings, a radius of 8¾ inches from center of hub to center of pipe cross; and
2. From the center of the first pipe cross, 11½ inches for I-brackets and T-brackets, 14½ inches for countdown brackets.

Ensure the internal surfaces of pipes and fittings are free of sharp edges and burrs. Use ferrous pipe crosses to make right angles in the mounting assembly. Close unused openings of the pipe crosses with ornamental closures. Provide malleable iron adapters or slip fitters.

Provide malleable iron fittings free of flash and voids.

Install a plastic thread protector on exposed pipe threads to protect the threads from damage during shipping.

F. **Painting Requirements.** Before painting the mounting brackets, clean and treat the ferrous and aluminum surfaces in accordance with standard industry practice for each type of metal to ensure bonding of the paint to the metal.

Provide a coating system for the mounting bracket assembly consisting of durable and weather-resistant black enamels, applied at a uniform thickness without blisters, runs, or other defects. Provide an average dry film thickness of 1.5 mils as determined by Method A, Inductance Thickness Gauge, as specified in ASTM D1400.

Provide black LED pedestrian traffic signals. Provide visors with an inside surface painted flat black, compatible with polycarbonate plastic.

Provide signal parts with a color and finish that does not require painting to maintain a functional appearance. Ensure scratches on signal parts do not expose uncolored material.

Clean and pretreat metal surfaces of pedestrian signal mounting brackets, before painting and assembly, to ensure phosphate coating bonds to the surfaces in accordance with Federal Specifications TT C 490, “Cleaning Methods and Pretreatment of Ferrous Surfaces or Organic Coatings.”

Use semi-gloss or glossy black enamel to finish coat other exterior surfaces of the fittings, except stainless steel latch bolts and clips.

G. **Packing and Marking.** Pack each pedestrian signal separately to prevent damage to the pedestrian signal and mounting assembly during transportation to the project. Mark each carton legibly with the pedestrian signal and mounting assembly description and supplier's name.

H. **Quality Assurance.** Provide LED modules that comply with the quality assurance production testing, inspection, and design specified in the ITE PTCSI Part 2 "Pedestrian Traffic Signal Modules," adopted 2004.

I. **Tests, Inspection, and Sampling.** Test each LED and inspect for conformance with this section before shipment. Reject pieces of equipment that fail to meet the requirements of this section. Ensure a certified independent test lab provides test data to verify pedestrian signal performance meets the requirements of Section 6 of the LED Performance Specifications.

J. **Drawings and Information.** Provide two copies of a detailed drawing and material specification list of the pedestrian head.

Provide LED pedestrian signal modules that comply with the quality assurance production testing and inspection requirements specified in Section 6 of the LED Performance Specifications.

Provide a test report in accordance with subsection 921.04.I from an independent lab certifying pedestrian signals meet the requirements of the LED Performance Specifications.

The Engineer will hold the information required by this subsection 921.04.J, along with a sample, if requested, as standards for acceptance.

921.05. Traffic Signal Strain Pole.

A. **Foundation.**

1. Steel reinforcement for all drilled shafts must be in accordance with section 905.

2. Concrete mix must be in accordance with Division 10.

3. Slurry must be in accordance with section 1004.

4. Conduit material must be in accordance with in accordance with section 818.

5. Anchor bolts, nuts, washers, and lock washers must be in accordance with subsection 908.14.A and 908.14.C, including the elongation and reduction of area requirements listed in Table 908-1 of subsection 908.14.B.

B. **Shaft and Base.** Provide traffic signal strain poles fabricated from steel meeting the requirements of ASTM A595/A595M, Grade A, meeting a yield point (fy) of 55 kips per square inch (ksi) or ASTM A572/A572M, Grade 50 steel, fy equals 50 ksi. Base material must meet the requirements of ASTM A36/A36M.

Provide a tapered shaft with a circular or at least an eight-sided polygonal cross section. Shafts may be multi-ply.

Provide a pole top with means for securing to the top of the shaft.

Provide a hook or other device for supporting a cable on the inside of the shaft near the top.

Provide each pole with three pole bands for attaching the traffic signal span, minor cable span, and service rack. Only attach one of these spans or racks to each pole band.

C. **Strength Requirements.** Provide a standard capable of withstanding a transverse load of at least 3,700 pounds applied 18 inches below the top of the shaft without exceeding the elastic limit. Ensure the deflection of the shaft does not exceed 0.40 inch per 100 pounds of transverse load applied at the same point.

D. **Identification of Manufacturer.** Provide standards with a catalog or other manufacturer's identification number permanently marked on the base.

921.06. Traffic, Pedestrian Signals, Pushbutton Pedestals. Provide pedestals for mounting pedestrian pushbuttons with signs, or traffic and pedestrian signals. Equip poles over 11' with support bracket for 4 inch nominal size pipe.

Provide pedestals of the overall height shown on the plans or as directed by the Engineer.
Provide pedestals meeting the minimum requirements of this subsection and the special details.

Provide a pedestal made with an aluminum shaft threaded into a cast aluminum base. Secure the shaft by a stainless steel set screw to prevent loosening or turning after installation. Provide lug for grounding connection within pedestal base.

A. **Shaft.** Provide extruded aluminum pedestal shafts meeting the following characteristics:

1. Aluminum alloy meeting the requirements of ASTM B308/B308M,
2. Tensile strength of 30 ksi:
3. Yield strength of 25 ksi:
4. Elongation of 10 percent:
5. Walls 0.237 inch thick; and
6. Outside diameter of 4½ inches.

Provide threaded and de-burred pedestal shafts that conform to the basic dimensions of ASME B1.20.1, for taper pipe threads (NPT). Ensure the threaded end of the pedestal shaft has 4 inches of NPT thread. Coat threads with anti-seize grease before assembly. Equip pushbutton pedestals with a standard 4-inch cap.

B. **Finish.** Do not paint aluminum pedestals. Provide aluminum shafts with the minimum finish requirements specified in this subsection.

1. **Finish Type.** Provide a shaft with the full length covered with a tough surface texture that is not a mill finish, consisting of a uniform grain pattern perpendicular to the axis of the shaft.

2. **Texture Profile.** Ensure the grain profile has a surface roughness of at least two, but no greater than four times a roughness average (Ra) of 250 microinches. Provide aluminum pedestal shafts free of the following:

   a. Excessive material;
   b. Heat discoloration of material;
   c. Irregular grain spacing and grain patterns;
   d. Waviness;
   e. Scratches or marks of varying depths and sizes;
   f. Holes;
   g. Ridges;
   h. Cracks; and
   i. Other surface defects, not removed in the finish process.

C. **Mill Certification.** Require the manufacturer to maintain reports and provide copies to the Department on request.

D. **Hardware.** Provide foundation bolts with a minimum diameter of ¾ inch, 21 inches long and with a 3 inch L-bend on the unthreaded end.

Equip foundation bolts with hexagonal nuts and washers. Ensure the threaded end of the bolts are threaded a minimum of 3 inches. Electro-galvanize bolts after threading in accordance with ASTM B633, Service Condition 4 for the entire length, or hot-dip galvanize in accordance with ASTM A153. Provide nuts that are galvanized using similar methods as used on the bolts, and ensure nuts turn freely on the bolts after galvanizing. Provide a level foundation surface to accept the base assembly.

Attach the access door in the base of the pedestal with an AISI, 300 Series stainless steel machine screws.

E. **Drawings.** Provide two copies of detailed dimensional and installation drawings to the Engineer.

F. **Packaging.** Provide a protective cap for the threaded end of bolts to prevent thread damage. Provide a cardboard sleeve that covers the entire length of shaft to protect surface finish.

921.07. Illuminated and Non-illuminated Case Signs. Provide LED case signs internally illuminated by LEDs and changeable message case signs internally illuminated with LED light sources. Ensure signs are designed to operate on 120 volt, single-phase AC electrical systems. Work includes a retrofit unit capable of removing and replacing the LED light module and associated material of an existing internally illuminated case sign.

Provide non-illuminated case signs equipped with retroreflective case sign panels.

Ensure well-fitted, free-moving doors and other moving components.

A. **Hardware.** For fasteners partially or completely exposed on the exterior of case signs, provide AISI, 300 Series stainless steel fasteners. Provide a mounting hub for case signs of 1½ inch, malleable iron, KK-197, four-bolt mounted on the top center of the sign.

B. **Housing and Door Requirements.**

1. **Housing for LED and Non-Illuminated Case Signs.** Provide one-way and two-way housings constructed of a minimum 0.080 inch thick extruded aluminum.

   Provide four-way housings constructed with a minimum 0.063 inch thick aluminum body and a 1 ½ inches by 1 ½ inches by ⅛ inch thick channeled aluminum framework.

   Place a 1 inch, screened drain hole at each of the four corners of the housing bottom.

2. **Housing for Changeable Message LED Case Sign.** Provide case sign housing constructed of a minimum 0.125 inch thick extruded aluminum with a 0.063 inch thick flat aluminum back welded at the back.

   Provide a back capable of being inserted into a slot designed in the backside of the extrusion. Ensure the slot directs water out of the housing. Ensure corners are TIG welded to provide a weatherproof seal around the entire housing.

3. **Doors for LED Case Signs.** Provide doors constructed of a minimum 0.080 inch thick extruded aluminum for four-way, one-way and two-way case signs. Fasten doors to the housing by a full length stainless steel hinge. Secure doors onto a 1 inch wide by $^{5}/_{32}$ inch thick neoprene gasket with one or two ¼ turn Link Locks.

4. **Doors for Non-Illuminated Case Signs.** Provide doors constructed of a minimum 0.080 inch thick extruded aluminum. Fasten doors to the housing by a full length, 0.040 inch by 1½ inch open stainless steel hinge. Secure doors onto a 1 inch wide by $^{5}/_{32}$ inch thick neoprene gasket with one or two ¼ turn Link Locks.

Provide single or double sided signs with a hinged, extruded aluminum service door to provide access to either side for service.

5. **Doors for Changeable Message Case Signs.** Provide doors constructed of 0.125 inch thick extruded aluminum. Ensure two corners are TIG welded and two corners screwed together to make one side of the door removable for installation of the Fiber Optic Module. Fasten the door to the housing on the left using a full length, 0.040 inch by 1¼ inch open stainless steel hinge. Secure the door onto a 1 inch wide by $^{5}/_{32}$ inch thick neoprene gasket using two ¼ turn Link Locks.

   Provide single or double sided signs with a hinged, extruded aluminum service door to provide access to either side for service.

   Ensure the sign door allows full access to serviceable components of the sign.

   Fit a three sided visor made of 0.63 inch thick aluminum to the door.

C. **LED Case Sign Electrical Requirements.** Provide an LED case sign designed to operate on 120 VAC, 60 hertz, single phase. Ensure the LED current operates at the manufacturer's recommended current and voltage.

Where conductors pass through sheet metal or conduit, provide bushings, grommets, or rolled edges on the edges of openings, to protect conductors from abrasion. Provide a toggle switch as a disconnecting means.

1. **LED Light.** Provide LED light consisting of LEDs that provide at least 250 candelas per square meter, or an equivalent surface luminance of 1,000 lux over an ambient temperature range from −40 °F to 165 °F, consistent with the NEMA temperature specifications. Ensure the LED lights contain a quantity of white LEDs to uniformly illuminate the viewing area.

   Provide LED light modules that consist of a circuit board comprised of an insulated aluminum substrate, at least 0.050 inch thick, where LED modules are used.

   Ensure the LED light operates for at least 50,000 hours with a lumen depreciation no greater than 30 percent. Ensure the LED supplier provides operational documentation, if requested, based on actual temperature measurements taken after 12 continuous hours of operation, correlated against lumen depreciation and LED mortality curves.

   Where LED modules are used, ensure the LED light module electronics are entirely coated with at least a 0.002 inch dry coat, to protect the light module from moisture and corrosion. Ensure LED modules are reduction of hazardous substances (ROHS) compliant.

Where LED modules are used, attach the LED light module to the case sign housing to allow the module to remain in place during maintenance or retrofit activities. Ensure the LED light module passes the tests specified in subsection 921.07.C.1.a and subsection 921.07.C.1.b, in accordance with the NEMA Standards.

Where LED modules are not used, install two Edison-base sockets, one at the top and one at the bottom of the sign frame.

a. **Thermal Shock Test.** Perform the thermal shock test on LED light modules at temperatures of 85 °F and −40 °F for five cycles of 2 hour dwells with a 2 hour presoak at −40 °F.

b. **Salt Spray and Soak Test.** Ensure LED light module endures 48 hours of continuous salt spray and 240 hours of salt water soak.

   Ensure the manufacturer burns-in LED light modules for 24 hours and certifies for compliance. Ensure the manufacturer mounts a quality control (QC) tracking sticker and the manufacturer's name and date of manufacture on the inside of the LED light module.

   Ensure the LED light modules do not exceed a 59 °F temperature rise under continuous operating conditions.

   Paint the panels white and ensure panels meet GM4901 Specifications.

2. **Power Consumption and Power Supply Panel.** Provide LED case signs with the maximum power consumption wattage as follows:

Table 921-3
LED Case Sign Maximum Power Consumption

Case Sign Size	Power Consumption
1-Way 12 in × 27 in	15 watts
4-Way 12 in × 27 in	60 watts
1-Way 24 in × 30 in	45 watts
2-Way 24 in × 30 in	90 watts
4-Way 24 in × 30 in	180 watts

Where LED modules are used, provide at least 75-watt power supply units rated by the UL for Class 2 operation, 24 volts Direct Current (DC), and Ingress Protection (IP66) rated.

Provide a terminal block for the incoming 120 VAC power. Where LED modules are used, connect the output of the 24-volt power supply to a two-wire connector that attaches to the LED light modules.

3. **LED Retrofit Assembly.** Provide LED retrofit assemblies meeting the requirements of this subsection that do not alter the structural properties or functional requirements of the case sign.

D. **Changeable Message Case Sign Electrical Requirements.** Provide changeable message signs capable of displaying three distinct fiber optic type messages. Provide the case sign, hardware, fittings, cable, and one message, clearly and legibly displayed under any lighting conditions when energized. Refer to the FHWA and MMUTCD legends for single or multi-message overlays.

Provide a changeable message sign that forms the message with a single or double row of fiber optic glass bundles. Provide energized bundles that are highly visible within a 60-degree cone, centered around the optic axis.

1. **Fiber Optic Module.** Provide a fiber optic module consisting of a flat black, aluminum alloy, 3003 H14 faceplate, 0.080 inch thick, with the fiber optic assembly directly mounted to it. Insert the assembly into the rear track of the extruded aluminum door.

   Secure glass, fiber optic bundles into an end tip using epoxy at the termination end, and the common assembly at the other end. Grind smooth and optically polish to ensure maximum light transmission through the bundle.

   Insert the end tip of black nylon into a punched hole in the black faceplate and mechanically hold in place with four crush ribs along the outside diameter of the end tip. Ensure the end tip, if installed on the faceplate, does not protrude more than $^{5}/_{16}$ inch.

   Ensure the LED light sources provide the message colors. Provide LED light sources capable of being changed in the field by replacing the solid state LED lamp without removing the sign from the case. Mount the LED light source with four No. 8 × ⅜ stainless steel screws between the common assembly and the LED lamp. Provide LED light sources that sustain an average 50,000 hour life.

   Provide messages illuminated by at least two light sources, based on the message. Arrange the glass bundles so if one light source fails the other sources continue to provide a legible message by lighting every other point in the message. Ensure no color appears in the output points if the source is not energized, regardless of ambient light condition.

   Provide messages that are clearly legible under any lighting conditions. Ensure the sign is highly visible at full intensity within a 20-degree cone, centered around the optic axis.

   Provide a ⅛ inch thick matte or clear polycarbonate lens with anti glare characteristics to protect the LED assembly. Insert the lens into the front track in the door.

2. **Lamps and Drivers.** Use solid state LED lamps to illuminate the messages. Use two lamps per message to provide fail safe operation in the event of lamp failure.

Provide a 5-watt, LED type, or Department-approved equal LED lamp, based MR 16 traditional halogen package, rated for 50,000 hours life.

Where LED drivers are used, provide LED drivers to reduce the incoming 120 VAC to the lamp manufacturer's suggested operating voltage and current. Provide UL Class 2 rated LED drivers that operate at temperatures from −40 °F to 176 °F. Provide LED drivers rated for 50,000 hours of life. Ensure LED drivers provide a consistent light output across the line and load levels. Use a separate LED driver with each lamp to provide failsafe protection.

Provide a barrier-type terminal strip, Weco 324/HDS/12-type or Department-approved equal, for electrical connection of field wires.

Provide signs capable of continuous operation over a range of temperatures from -35 °F to 140 °F.

Include supplementary markings to indicate the correct method of connection for the leads.

E. **Face.**

1. **LED Case Sign.** Provide an LED case sign face that is Lexan translucent white, or other Department-approved plastic material with equivalent or better weathering, structural, and optical properties.

   Provide a face that is 0.125 inch thick ±10 percent. Mark each face with the plastic name or trade name.

   Provide sign faces with a message applied to the outside. For black sign copy, provide 3M Company, Scotchcal, ElectroCut Film No. 7720 12 and for red copy, provide 3M Company Scotchlite, ElectroCut Film (E.C. Film) No. 1172, or Department-approved equals.

2. **Changeable Message Case Sign.** Provide changeable message case sign faces, designed to clearly and legibly display three distinct fiber optic messages, one message at a time, when energized under any lighting conditions. Refer to standard FHWA and MMUTCD legends to provide a single or multi message overlay.

   Form the message with single or double rows of fiber optic glass bundles. Ensure the energized bundles are highly visible within a 60-degree cone centered around the optic axis.

3. **Non-Illuminated Case Sign Panel.** Provide non-illuminated case sign panel sections meeting the requirements of subsection 919.02.C. Provide reflective sheeting material meeting the requirements of ASTM D4956, for Type IX retroflective sheeting.

   Provide one-piece case sign panel sections of Type III aluminum sheet with no vertical splices.

Apply the reflective and non-reflective legends in accordance with the sheeting manufacturers' recommendations. Provide legends that display one symbol or text message.

Insert the case sign panel into the front track in the door.

For sign panels without legends, provide aluminum panels. Coat the exterior face with a semi-gloss or gloss yellow enamel. Provide a color within the limits shown on the Highway Yellow Color Tolerance Chart for the central color, except provide a color darker than the central color. Coat the interior face with a semi-gloss or gloss white enamel.

F. **Wiring.** Provide illuminated case signs completely wired. Provide 600 volt, No. 18 AWG soft annealed copper wiring with the following characteristics:

1. Color coded,
2. At least seven strands, and
3. Insulation of 194 °F THHN thermoplastic or 194 °F neoprene and marked.

Provide wiring that runs neatly in flexible aluminum conduit between the power supply and the socket housing. Where conductors pass through an opening in sheet metal or conduit, provide bushings, grommets, or rolled edges to protect conductors.

Make splices and terminations at the terminal block, switch, lampholder leads, or ballast leads. Make splices mechanically and electrically secure using insulated pressure-type, solderless connectors. Make terminations mechanically and electrically secure using insulated pressure-type solderless terminals. Provide stainless steel or nickel-plated brass wire connecting screws, tabs, washers, and strips.

Mount switches and prevent them from turning by providing mechanical means other than friction.

G. **Painting Requirements.** Before painting the case sign, clean metal surfaces and surface treat in accordance with standard industry practice to ensure paint bonds to the metal.

Provide a coating system consisting of durable and weather-resistant enamels applied in a uniform thickness, without blisters, runs or other defects. Provide an average dry film thickness of 1.5 mils, determined by Method A, "Inductance Thickness Gauge," as specified by ASTM D7091, "Measurement of Dry Film Thickness of Nonmagnetic Coatings of Paint, Varnish, Lacquer, and Related Products Applied on a Nonmagnetic Metal Base." Coat the metal interior of the sign with a semi-gloss or gloss white enamel.

Coat the exterior of the sign with a semi-gloss or gloss yellow enamel. Provide a color within the limits shown on the Highway Yellow Color Tolerance Chart for the central color, except provide a color darker than the central color.

H. **Packing and Marking.** Provide finished signs with a permanent legible marking that includes the supplier's name, trademark, or other means of identification.

Package signs individually to prevent damage t to the sign during transportation. Mark each package is legibly with the descriptions of contents and supplier's name.

I. **Inspection.** The Department will perform inspections of illuminated and non-illuminated case signs. Provide mill test reports for aluminum extrusions upon the Department's request.

At the time of delivery, ensure the supplier provides a general certification, stating that materials meet pretreatment requirements, as specified by subsection 921.07.G. Ensure the certification references the method and material used in the pretreatment process.

921.08. Traffic Loop.

A. **Traffic Loop Wire.** Provide loop wire and loop lead-in wire meeting the requirements of subsection 918.03.

B. **Traffic Loop Sealant.** To seal and encapsulate detector loop wires in concrete or hot mix asphalt (HMA) roadway surfaces, provide sealant in cartridges for use with a common 1 quart manual caulking gun or air powered caulking gun. Provide sealant meeting the following requirements:

1. Consists of one part moisture curing and self-leveling polyurethane, not containing a level of solvents that would cause an incompatibility with asphalt. If installing traffic loop in existing pavement before placing a final asphalt wearing course, provide sealant compatible with the asphalt wearing course.
2. Minimum temperature range for application from 40 °F to 100 °F, and a minimum service temperature range from −40 °F to 200 °F.
3. Dielectric constant greater than 6 at 50 Hertz, and greater than 4 at 500 Hertz or greater.
4. Viscosity from 28,000 cPs to 48,000 cPs, tack free within 24 hours or less after application.
5. Non-stringing and capable of opening to traffic immediately after sealant recesses ⅛ inch.
6. Provides complete encapsulation of the detector loop wires in a rubber-like environment, and provides protection against moisture, wire and thermal pavement movements, and damage under normal roadway conditions.
7. Moisture cure to a tough, long lasting seal that resists weather, abrasion, oils, gasoline, anti-freeze solutions, brake fluids, and road salts and other deicers.
8. Remains permanently flexible without shrinking or pulling-out of the saw cut groves after application. Ensure cured sealant is temperature stable throughout the specified minimum service temperature range without performance degradation.

C. **Packaging and Marking.** Deliver materials in the original, tightly sealed containers, clearly labeled with the manufacturer's name, product identification, and lot number. Pack each case of

cartridges to prevent damage to the cartridges during transportation to the project. Mark each carton legibly with a description of the contents and the supplier's name.

921.09. Digital Loop Detector. Provide digital loop detectors meeting current and applicable NEMA standards. Provide high performance, four channel, inductive loop vehicle detectors with liquid crystal displays (LCD) to indicate the operational, setup, and loop diagnostic parameters of the loop detector system in accordance with the minimum design, operational, and functional performance requirements specified in this subsection.

A. **Detector Loop Requirements.** Provide detector units meeting the environmental, transient, and size requirements of NEMA Standards TS-1 1994, Section 15, TS-2, 2003 Section 6.5,.

Provide microprocessor controlled, fully digital, self tuning detector units with four operationally independent channels. Ensure the detector unit is configured as a rack-mounted printed circuit board for insertion into a NEMA TS-1 and TS-2 rack.

Provide a detector with optically isolated, solid state outputs, designed to provide a continuous "fail-safe" output in the event of power loss to the unit. Ensure each channel provides a continuous fail-safe output and indication in response to an open or shorted loop.

Provide a detector that uses two spring-loaded toggle switches per channel to setup and retrieve information from the detector.

Provide a detector unit that displays and records open loops, shorted loops, or an excess inductance change greater than 25 percent. Program the LCD and yellow fault LED to display the type of error. Program the LCD to display "Shorted loop," "Open loop," or "25% DL/L" and log the most recent 25 events. Provide units that store the information in non-volatile memory.

Ensure each channel includes two, wide angle, high visibility LED indicators.

Provide channels with a red LED to display channel detect output status, output state, and the status of the delay and extension timers, plus a yellow LED to display loop fault monitor diagnostics.

Ensure the red channel detect LED indicator flashes at a rate of 2 hertz during delay timing and flashes at a rate of 4 Hertz during extension timing.

Ensure the yellow fault LED flashes once to indicate an open loop, twice to indicate a shorted loop, and three times to indicate an excessive change in inductance.

During fault indication, ensure the red channel detect LED flashes at the same rate as the yellow fault LED to indicate a current fault. If the fault self-heals, ensure the red LED returns to normal operation and the yellow fault LED continues to flash, indicating a prior fault.

B. **Graphic Liquid Crystal Display.** Provide a graphic LCD unit capable of displaying four channels simultaneously.

Provide a unit capable of setting up channels simultaneously and resetting channels individually.

Provide a unit that uses a white back light for the LCD. Do not provide units with electro-luminescence.

C. **LCD Full Prompting Menu System.** Provide an LCD unit that prompts the user with word prompts in English for easy setup, operation, diagnostic, and information gathering operations.

Provide a menu system that prompts the end user for the input specified in this subsection during setup and operation.

1. **Sensitivity.** Ensure the LCD prompting menu offers a range of sensitivity values from 1 to 15, and an "OFF" option that disables the channel. Provide a system that displays a pie chart showing the deflection caused by vehicles on the loop, to assist in determining the correct sensitivity, and an XY chart showing the deflection values and vehicle calls over time.
2. **Frequency.** Provide an LCD prompting menu that displays eight frequency values that the user can select from, depending on the frequency of adjacent loops. Ensure the actual frequency is displayed and can be compared to adjacent detectors to achieve maximum separation between adjacent loops. Provide a unit capable of graphically displaying noise or crosstalk on the display.
3. **Operational Mode.** Provide an LCD prompting menu that allows users to select one of two operational modes: "Pulse" or "Presence." If selecting "Presence," program the unit to prompt the user for "Short," "Long," or "User Defined Presence."
4. **Timing.** Ensure the timing menu for "Delay" and "Extension" prompts the user for a "yes" or "no" response. If selecting "yes," program the unit to prompt for the delay amount and extension timing.
5. **Count.** Provide a count that controls the secondary count outputs and prompts the user for a "yes" or "no" response. If selecting "yes," program the unit to prompt the user for the loop configuration from which it will take the counts and if secondary count outputs are active.
6. **Approach ID.** Program the unit to prompt the user to select alpha-numeric characters to identify the related approach of the channel (e.g. SBLT for south bound left turn).
7. **Display.** The "Display" selection determines the display that shows during normal operation at power up. Program the unit to prompt the user for frequency (FREQ), inductance (INDUCT), and count (Count). Ensure pressing "down" cycles through the display options.
8. **Event Logs.** Ensure selecting "Logs" allows the user to view the last 25 events, the most recent first, on a per channel basis. Provide a log with the type of fault, power up, power loss, and reset events, and the time elapsed after each event.

D. **Edge Connector Description.**

Table 921-4 Edge Connector Description	
Pin No.	**Function**
A	DC Supply - (Logic Ground)
B	DC Supply + (12 VDC – 24 VDC)
C	Reset
D	Loop Input Channel 1
E	Loop Input Channel 1
F	Call Output Channel 1 (Collector)
H	Call Output Channel 1 (Emitter)
J	Loop Input Channel 2
K	Loop Input Channel 2
L	Earth Ground
S	Secondary Count Output Channel 1
W	Call Output Channel 2 (Collector)
X	Call Output Channel 2 (Emitter)
Y	Secondary Count Output Channel 2
1	Green Input Channel 1
2	Green Input Channel 2
7	Status Output Channel 1
20	Status Output Channel 2

E. **Operation Requirements.** Provide detector units designed to operate over a voltage range from 10.8 VDC to 28 VDC. Provide a power supply that operates over a voltage range from 10.8 VDC to 28.8 VDC, and at no greater than 90 milli-amperes for back light illuminated units. Provide detector units with the following characteristics:

1. Loop tuning range from 20 micro hertz to 2,500 micro hertz, plus a lead-in with a range from 15 kilo Hertz to 60 kilo Hertz;
2. Q–factor of 5 minutes;
3. Low (true) inputs of less than 8 volts, and high (false) inputs greater than 16 volts;
4. Solid state, optically isolated call output. Ensure the “On” voltage is less than 1.5 volts at 50 milli-amperes collector current;
5. Status and count outputs no greater than 50 volts collector voltage, with an “On” voltage less than 1.5 volts at 50 milli-amperes collector current;
6. The following physical dimensions:
   a. 7 inches by 4.5 inches international card with 44 pin double-sided gold-edge connector, and
   b. 1.12 inch wide faceplate with 3 inch by 1 inch handle;
7. Weight of 1 pound; and
8. Functional from −29 °F to 165 °F at a maximum non-condensing humidity of 95 percent.

F. **Functional Data and Parts Lists.** Ensure the manufacturer provides a complete set of the following items with each loop detector, directly applicable to the loop detector with which the item is supplied:

1. Schematic and wiring diagrams of the loop detector and terminal facilities,
2. Instructions for loop detector installation and maintenance, and

3. Parts list.

G. **Packing and Marking.** Package each loop detector separately to prevent damage to the loop detector during transportation. Mark each carton legibly with the loop detector description, contract number, and supplier's name.

921.10. Steel Truss Arms. Provide steel truss arms for mounting video detection cameras and radio antennae as shown on the plans and in accordance with this subsection.

A. **Truss Brackets.** Provide truss brackets formed from round tube and steel bar or plate, complete with stainless steel U-bolts, nuts, and washers for mounting to steel poles or curved plate with bolt holes for mounting to wood poles. Provide trusses with an 18-degree rise in the top arm tube, from the mounting plate to the location of the device attachment. Locate a ⅞ inch rubber grommet within 3 inches of the mounting base plate on the underside of the upper arm tube.

B. **Truss.**

1. **Wood Pole Mount.** Provide arm tubes meeting the requirements of ASTM A500/A500M, for Grade B steel, with 2⅞ inch outside diameter (OD) by 0.203 inch thick tubing overlapped and welded to 2⅜ inch OD by 0.154 inch thick stock tubing for 16 foot, 18 foot, and 20 foot arms, or 2⅜ inch OD by 0.120 inch thick for arms no longer than 15 feet.

   To form the truss, weld ½ inch by 2 inch flat bar steel, meeting the requirements of ASTM A36/A36M, between arm tubes. Provide a pole mounting plate, formed using ⅜ inch ASTM A36/A36M steel plate and plate gussets welded to the arm tubes in accordance with the mounting plate detail shown on the truss arm drawing.

   Provide one plate per arm tube. Ensure each plate incorporates two 0.562 inch diameter holes and one 0.687 inch by 1.50 inch keyhole for lagging to the wood pole.

2. **Steel Pole Mount.** For 1½ foot, 4 foot, 6 foot, 9 foot, 12 foot, 15 foot, and 18 foot arms, provide arm tubes meeting the requirements of ASTM A500/A500M, for Grade B steel, with 2⅜ inch OD by 0.120 inch thick tubing, welded to ¼ inch formed steel mounting plate meeting the requirements of ASTM A36/A36M.

   To form the truss, weld ½ inch by 2 inch flat bar steel meeting the requirements of ASTM A36/A36M, between arm tubes. Provide ¼ inch flat bar steel gussets welded between the arm tube and mounting plate.

   Use steel U-bolts and other hardware, meeting the requirements of ASTM A36/A36M, to attach trusses to the steel pole. For poles with a diameter range from 8½ inches to less than 9⅛ inches, use ⅝ inch rod bolts. For poles with a diameter range from 9⅛ inches to 10¼ inches, use ¾ inch rod U-bolts. Use hex nuts, flat, and lock washers for fastening U bolts.

C. **Finishes.** Provide truss arms, brackets, and hardware, hot-dipped galvanized after fabrication and welded in accordance with ASTM A123/A123M and ASTM A153/A153M. Weld in accordance with AWS D1.1 Structural Welding Code - Steel.

921.11. Mast Arm Mount Signal Bracket. Provide adjustable mast arm mount signal brackets in accordance with Figure 921-1 and this subsection.

A. **Adjustability.** Ensure the bracket is adjustable as shown in Figure 921-1, A through D.

B. **Attachment.** Provide the bracket with Type 201 stainless steel band to fasten the bracket to the supporting arm or structure. Provide an easily adjustable bracket to fit all sizes of round, octagonal, elliptical, or other shaped structure without special tools or equipment.

C. **Signal Accommodations.** Attach the bracket to the signal by clamping the signal from the top and bottom to ensure maximum rigidity. Provide a standard bracket, as shown in Figure 921-1, to accommodate all major signal manufacturers' signals ranging from a three-section one-way 8-inch signal to a three-section one-way 12-inch signal, or a combination of sizes including 3M and ICC configurations.

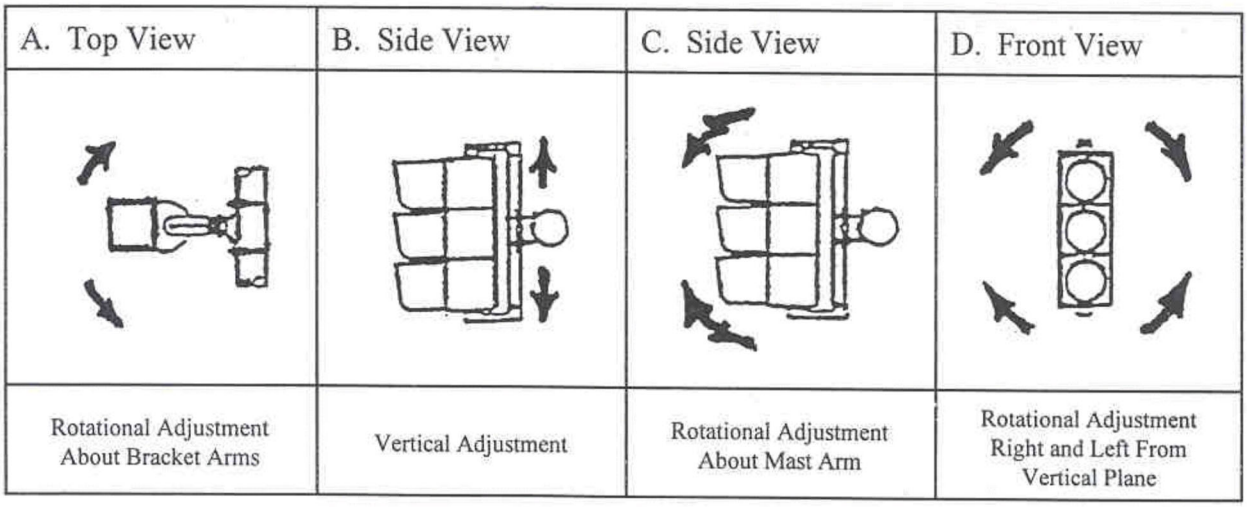

Figure 921-1: Signal Head Bracket Adjustment

Ensure electrical wiring is concealed in the bracket. Provide a gusseted, C-shaped, extruded aluminum tube for the vertical support to accommodate the signal cable, regardless of the vertical position of the tube.

D. **Material and Design.** Provide upper and lower arms cast from 319 aluminum or a Department-approved equal. Ensure the lower bracket arm is internally threaded to accommodate the threaded vertical support tube. Provide the lower arm with ABS plastic covers that will slide and snap into position without fasteners or tools. Ensure the upper and lower arms have 72 tooth serrations cast into the arm to ensure a positive lock with the signal housing,

secured around the rotational axis with setscrews. Provide upper and lower arms with a tri-bolt arrangement for attachment to the signal housing. Ensure the lower arm has an opening to accommodate at least three 12 conductor, 14 gauge cables.

E. **The Vertical Support Tube.** Provide a double gusseted, extruded 6082-T8 aluminum alloy tube for the vertical support with the cross section shown in Figure 921-2, Section "A-A." Provide each tube with a vinyl closure strip, threaded on one end to accommodate the lower arm assembly.

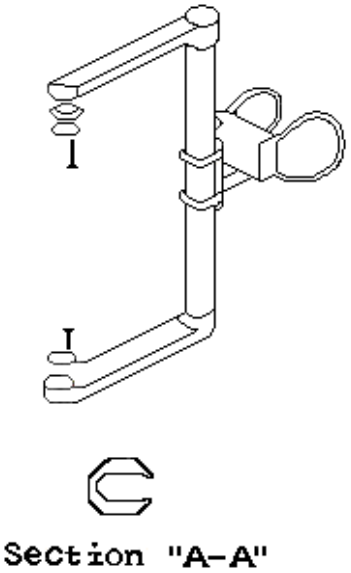

Figure 921-2: Section "A-A"

F. **The Mast Arm Clamp Assembly.** Provide a mast arm clamp assembly with male and female halves cast from 356-T8 aluminum alloy or a Department-approved equal. Ensure the male clamp half is secured in the female half, using a spring steel retainer ring. Ensure the assembly provides an unobstructed center of at least 2 inches in diameter to allow for 360-degree rotation of the clamp assembly. Ensure no internal cross bracing assembly obstructs the center opening.

Provide a mast arm clamp assembly equipped with galvanized steel cable, $^{7}/_{16}$" diameter.

G. **Hardware.** Provide each bracket with required bolts, washers, gaskets, and other hardware to attach the signal to the bracket and the bracket to the mast arm.

H. **Finish.** Provide aluminum parts with an Alodine 1200 finish or Department-approved equal.

Provide steel parts with a yellow, zinc di-chromate finish.

Section 922. TEMPORARY TRAFFIC CONTROL MATERIALS

922.01. Description. Temporary traffic control devices must meet the design requirements of the MMUTCD, Part 6, Materials Quality Assurance Procedures Manual (MQAP), and the requirements of section 922.

Provide the Engineer with certification and an FHWA acceptance letter stating that the materials and devices meet the requirements of this section. Certification documents and the FHWA acceptance letter do not waive material and device inspection, sampling, or testing requirements.

922.02. Temporary Signs.

A. **Sign Panel and Supports.** Temporary signs must meet NCHRP-350 crashworthy requirements or the requirements of the *Manual for Assessing Safety Hardware* (MASH), as applicable.

1. **Portable Sign Systems.** Portable sign systems must meet the following requirements:

   a. Signs for which the substrate totals 20 square feet or less, must be constructed with the materials and design features specified in the associated FHWA acceptance letter.
   b. Temporary ground driven sign system must be constructed as described in the Maintaining Traffic Typical WZD-100 or other NCHRP-350/MASH accepted design.

2. **Portable Sign Substrate.** Portable sign substrates must conform to the materials requirements of section 919 and the following requirements:

   a. Rigid sign panels no greater than 3 feet by 3 feet must be aluminum sheet, plywood, or corrugated plastic.
   b. Rigid sign panels larger than 3 feet by 3 feet and up to 8 feet in width must be plywood or corrugated plastic.
   c. Rigid sign panels with a width of greater than 8 feet but not greater than 12 feet must be plywood or extruded aluminum.
   d. Rigid sign panels with a width greater than 12 feet must be extruded aluminum.
   e. Temporary sign panels fabricated with plywood must have a minimum thickness of ½ inch.

   No vertical joints in sign substrates nor horizontal splices through legends or symbols are permitted.

B. **Reflective Sheeting.** Reflective sheeting must meet or exceed the requirements of ASTM D4956, for Type VIII reflective sheeting. Orange colored sheeting must be fluorescent orange reflective sheeting.

C. **Legend.** Legend fabrication and application must meet the requirements of the Michigan Standard Highway Signs Manual.

D. **Sign Covers.** Cover material for permanent signs and temporary signs on driven supports must be exterior grade plywood, hardboard, sheet metal, aluminum, or rigid plastic capable of resisting deterioration from weathering and atmospheric conditions for the duration of the project. Do not use flexible materials on permanent signs. Flexible materials are only allowed on temporary signs.

Covers must be opaque during all light and weather conditions and must cover the entire front of sign panels.

922.03. Channelizing Devices. Channelizing devices include cones, drums, 42-inch channelizing devices, and Type III barricades. Reflective sheeting for channelizing devices must meet or exceed the requirements of ASTM D4956 for reboundable Type IV reflective sheeting. The fluorescent orange sheeting must have a Daytime Luminance factor that meets or exceeds 20 based on Table 2 of ASTM D4956 - Daytime Luminance Factor (Y%)[A]. The white sheeting must have a Daytime Luminance factor that meets or exceeds 27 based on Table 2 of ASTM D4956 - Daytime Luminance Factor (Y%)[A]. Provide certification from the manufacturer that devices meet NCHRP 350/MASH requirements.

A. **Cones.** Traffic cones must be predominantly orange, at least 28 inches high, and made of material capable of withstanding impact without damaging vehicles.

B. **Drums.** Drums must be composed of a low-density polyethylene plastic. Do not use high-density polyethylene for plastic drums. The drum striping design must meet the requirements of WZD-125.

C. **42-Inch Channelizing Devices.** Forty-two-inch channelizing devices must meet the following requirements:

1. Have 42-inch minimum height and may include a “handle” or lifting device that extends above the 42-inch height;
2. Be fabricated of material capable of withstanding impact without damaging vehicles;
3. Have a base at least 8 inches in diameter and taper to at least a 4-inch diameter at the top, regardless of orientation;
4. Be predominantly orange;
5. Include ballast meeting the manufacturer’s specifications as necessary to keep them upright; and
6. Sheeting pattern must consist of four 6-inch alternating orange and white bands with no more than 2 inches between the bands, with the top band being orange and spaced no greater than 4 inches from the top of the device.

D. **Temporary Tubular Markers.** Tubular Markers must meet the following requirements:

1. Consist of a vertical tube (post) with alternating white and orange reflective sheeting, a flexible boot to provide impact rebound and prevent excessive whiplash, and a base.
2. Fabricated from material that can be struck without causing damage to the impacting vehicle and are resistant to the following; impact, ultraviolet light, ozone, and hydrocarbons, and must remain resistant at air temperatures from -20 degrees F to +120 degrees F.
3. Provide for easy and quick removal of the post from the base and boot members.
4. Exhibit good workmanship, free of burns, discoloration, contamination, and other objectionable marks or defects which affect appearance or serviceability.
5. Must be predominantly orange and must be not less than 42 inches high and 2 inches wide facing road users. Have a minimum width of 2 inches throughout the entire post and be a minimum of 42 inches above the ground surface when assembled, unless otherwise approved by the Engineer.
6. Be capable of withstanding a minimum of 15 impacts at a speed of 50 mph into the traffic face of the post and remain serviceable.
7. Meet the crashworthy requirements of NCHRP 350 or MASH (AASHTO Manual for Assessing Safety hardware).
8. Markers must have four, 4 inch to 6 inch wide alternating orange and white stripes with the top stripe being orange. The bands must be made of ASTM Type III Flexible High Intensity Sheeting, placed a maximum of 2 inches from the top.

E. **Type III Barricades.** Type III barricades consist of three horizontal reflectorized rails, supports, and warning lights. Type III barricades must have both sides of the rails reflectorized with Type IV high-intensity sheeting. Type III barricades must meet WZD-125.

F. **Temporary Delineators.** Temporary Delineators must the crashworthy requirements of NCHRP 350 or MASH (AASHTO Manual for Assessing Safety hardware).

Exhibit good workmanship, free of burns, discoloration, contamination, and other objectionable marks or defects which affect appearance or serviceability.

1. Temporary Delineator Panels. Provide temporary delineator panels meeting all of the following requirements:

   a. Panels must consist of a vertical panel that is 8 inches in width and 24 inches in height and must be mounted with a bottom height of 2 feet. They must have alternating diagonal fluorescent orange and white stripes with a thickness of 6 inches sloping downward at an angle of 45 degrees in the direction vehicle traffic is to pass, and be made of sheeting meeting the requirements of ASTM Type IV sheeting. The fluorescent orange must meet the requirements as described in the Michigan Manual of Uniform Traffic Control Devices (MMUTCD) and 23 Code of Federal Regulations (CFR) Part 655, subpart F, Appendix.

   b. Panels must be at least 3/8 inch thick corrugated plastic and attached to a sign post in accordance with subsection 810.03.B of the Standard Specifications for Construction.

2. Temporary Flexible Delineators. Provide temporary flexible delineators meeting all of the following requirements:

a. Flexible delineators must consist of a vertical post with four 6 inch alternating white and fluorescent orange reflective sheeting with the top band being fluorescent orange. The bands must be made of ASTM Type IV sheeting, placed a maximum of 2 inches from the top, a flexible boot to provide impact rebound and prevent excessive whiplash, and a base. The fluorescent orange must meet the requirements as described in the Michigan Manual of Uniform Traffic Control Devices (MMUTCD) and 23 Code of Federal Regulations (CFR) Part 655, subpart F, Appendix.

b. Fabricated from material that can be struck without causing damage to the impacting vehicle and are resistant to the following; impact, ultraviolet light, ozone, and hydrocarbons, and must remain resistant at temperatures from -20 degrees Fahrenheit (F) to +120 degrees F.

c. Allows removal of the post from the base and boot members.

d. Be predominantly orange, not less than 42 inches high, and 2 inches wide facing oncoming traffic.

e. Capable of withstanding a minimum of 15 impacts at a speed of 50 miles per hour (mph) into the traffic face of the post and remain serviceable.

922.04. Temporary Concrete Barrier and Endings. Concrete barrier, endings and associated hardware and impact attenuators must meet or exceed NCHRP-350 Test Level 3 or MASH Test Level 3 requirements.

A. **Temporary Concrete Barrier.** Temporary concrete barrier must be eligible for federal aid reimbursement by FHWA. The tested maximum deflection must not exceed 6½ feet when installed. Provide certification documenting that the concrete used in fabricating the barrier sections meets or exceeds the requirements of the concrete used in crash tested sections.

Provide temporary barrier sections of lengths equal to or greater than the sections that were successfully crash tested under NCHRP 350, TL-3 or MASH, TL-3 criteria. Ensure lengths of temporary barrier sections are adequate for achieving the required curvature or deflection in barrier alignment.

The bottom width of barrier sections must not exceed 28 inches. The top of sections must be flat and at least 6 inches wide.

Cast barriers using concrete equivalent to or exceeding the requirements of that used in similar temporary concrete barrier sections that were successfully crash tested according to the requirements of NCHRP 350, TL-3 or the MASH, TL-3. Cure in accordance with subsection

804.03.F. Cast barriers in accordance with the weather and temperature limitations specified in subsection 602.03.T. Provide a uniform, smooth finish on temporary concrete barrier surfaces.

The Contractor may use lifting devices or openings to enhance placement. Ensure lifting devices do not protrude from the sides or top of the barrier when the barrier is in place.

Install barrier reflectors on temporary concrete barrier to delineate the barrier wall. Reflectors must be trapezoidal or rectangular and include a methyl acrylate reflective area of at least 7.5 square inches. Initial photometric requirements at 0.2-degrees observation angle and 0-degree entrance angle must be at least 9 candela per lux for white markers and 6.5 candela per lux for yellow markers.

B. **Temporary Concrete Barrier Ending.** Provide concrete barrier ending meeting end Standard Plan R-126 series and section 812. The cross section and connection type for concrete barrier endings must match the cross section of the end of the in-place concrete barrier.

Impact attenuator devices must be constructed from material specified by the manufacturer and in accordance with Standard Plan R-49, R-54, and R-126 series.

Construct concrete attenuator base pads, foundations, anchor blocks, or backup units using Grade 4000 S1 concrete.

Ensure impact attenuator transition assemblies, transition panels, end panels, connections and other miscellaneous accessories required for installation meet the manufacturer's specifications.

Provide all modules in a sand module attenuator array from the same manufacturer. Do not mix different types of modules. Provide sand for filling sand module attenuators meeting the gradation and moisture content requirements specified by the manufacturer.

922.05. Temporary Guardrail. Use existing guardrail beam elements, posts and guardrail approach terminals for reconstructing guardrail if the Engineer determines this material is reusable in their present condition. If existing material is not reusable, provide new guardrail panels, posts, bolts, reflectorized washers, and other fittings.

Provide new guardrail beam elements and associated hardware and posts meeting the requirements of sections 908 and 912. Provide new guardrail posts of the same type as existing posts.

922.06. Temporary Pavement Markings. Temporary pavement markings consist of painted lines, pavement marking tape, and temporary raised pavement markers (TRPMs).

A. **Pavement Marking Materials.** Select paint, preformed tape, and temporary raised pavement markers from the Qualified Products List.

1. **Pavement Marking, Wet Reflective, Type R.** Provide wet reflective Type R temporary pavement marking as preformed tape. Select wet reflective Type R markings from the Qualified Products List (922.06A). Apply and remove preformed tape in accordance with the manufacturer's instructions. The tape must remain flexible and conform to the texture of the pavement surface during use.

2. **Pavement Marking, Wet Reflective, Type NR Paint.** Provide Wet Reflective Type NR temporary pavement markings as paint reflectorized with a wet reflective optic system recommended by the manufacturer and as approved by the Engineer, as required.

   a. **Wet Night Retro Reflective Optics.** Select WR optics from one of the following manufacturers or a Department approved alternative that meets or exceeds the requirements in Table 922-2:

   3M Corporation
   Potter's Industries
   Swarco

Table 922-2 **Temporary Wet Reflective Type NR Pavement Markings**		
Average Initial Retro reflectivity at 30-meter geometry in mcd/lux/sq m with flow of placement		
	Color	
Test Method	White	Yellow
Dry (ASTM E1710)	700	500
Wet Recovery (ASTM E2177)	250	200

   Ship the material to the job site or Contractor's yard in sturdy containers marked in accordance with subsection 920.01.A.

   Select glass beads for corresponding materials in accordance to subsection 920.02.

   Submit to the Engineer prior to the start of work a general certification from the manufacturer that when applied according to the construction methods herein, the glass beads and optics will meet the minimum requirements shown in Table 922-2.

   b. **Binder Material for Temporary Wet Reflective Type NR Pavement Markings.** Select the liquid applied pavement marking from one of the following materials from the Qualified Products List to use as a binder for the WR optics or use an alternative as approved by the Engineer:

   811.03D1 Waterborne, Liquid Pavement Marking Material
   811.03D2 Low Temperature Waterborne, Liquid Pavement Marking Material
   811.03D3 Regular Dry Paint, Liquid Pavement Marking Material

3. **Pavement Marking, Wet Reflective, Type NR Tape.** Provide Wet Reflective Type NR temporary pavement markings as preformed tape. The tape must remain flexible and conform to the texture of the pavement surface during use. Select wet reflective Type NR tape from the Qualified Products List (922.06A).

B. **Temporary Raised Pavement Markers (TRPM).** Select TRPM's from the Qualified Products List. Provide temporary raised pavement markers, reflectorized on one or both sides, depending on exposure to one-way or two-way traffic. Install TRPMs using the manufacturer's recommended adhesive and in accordance with the manufacturer's instructions.

1. **TRPM Type 1.** TRPM Type 1 consists of a flexible retroreflective strip with a protective removable plastic shield that the Contractor may use as a temporary pavement marking on a hot-mix asphalt (HMA) pavement surface before applying chip seal.

2. **TRPM Type 3.** TRPM Type 3 consists of a solid plastic device with a retroreflective face surface that the Contractor may use as a durable temporary pavement marking.

C. **Pavement Marking Cover.** Select from the Qualified Products List. Preformed polymer tape pavement marking covers must have a black non-reflective matte finish. In addition to the requirements of subsection 922.06.A.1, pavement marking cover tape must meet the following requirements and characteristics:

1. Be 6 inches wide;
2. Be at least 0.04 inches thick, not including adhesive;
3. Be pre-coated with a pressure sensitive adhesive, capable of adhering to existing markings;
4. Contain no metallic foil;
5. Consist of a mixture of high quality polymeric material, pigments, and inorganic fillers distributed throughout the base cross sectional area with a black non-reflective matte finish top layer with non-skid particles;
6. Provide an initial average surface skid resistance value of 60 BPN when tested in accordance with ASTM E303;
7. Remain in useable condition for 1 year after the receipt date when stored in accordance with the manufacturer's recommendations; and
8. Be manually removable in large pieces at temperatures greater than 40 degrees Fahrenheit without using heat, solvents, grinding, or blasting.

Ensure the tape, when applied in accordance with the manufacturer's recommendations, provides a neat, durable, masking that does not flow or distort on a stable pavement surface due to high temperature. Provide weather resistant film, capable of withstanding normal traffic wear without lifting, shrinking, tearing, rollback, or other signs or poor adhesion. Incorporate a non-metallic medium to facilitate removal.

922.07. Lighting Devices.

A. **Lighted Arrow, Types B and C.** Lighted arrows for traffic control in work zones consist of a lighted arrow panel, controller, and a power supply, mounted on a heavy-duty trailer.

1. **Lighted Arrow Panel.** Lighted arrow panels must have a flat black non-reflective surface and lights on the back to indicate which message mode is in operation.

   Type B panels must be at least 30 inches high by 60 inches wide and be equipped with 13 light emitting diode (LED) amber lights. Type C panels must be at least 48 inches high by 96

inches wide and be equipped with 15 LED amber lights. Program lights to present the following flashing message modes:

a. Left arrow,
b. Right arrow,
c. Double arrow, and
d. Caution.

2. **Controller.** Lighted arrows must have a photoelectrical control circuit that automatically adjusts the lamp intensity to ambient light conditions and with no manual override. An automatic intensity control that keeps the lamps at constant brightness when the battery is low is required.

3. **Power Supply.** Lighted arrows must have a solar power supply with a battery backup and a built-in 110 VAC battery charger. When fully charged, the arrow panel must be capable of operating for 20 days in single arrow mode with the photocell covered.

4. **Legibility.** The arrow panel must have an average legibility of 1 mile and, must be legible from ½ mile if viewed 10 degrees from center. Ensure installed arrow panels meet the legibility requirements of subsection 812.03.D.8.

5. **Trailer.** The trailer and trailer components, with the exception of the sign panel, must be painted in highway orange. Delineate the trailer with a 2-inch by-36 inch strip, or an equivalent area, of reflectorized red and white conspicuity tape, installed on each of the four sides of the trailer. Locate these strips at each corner of the trailer.

B. **Warning Lights.** Provide warning lights with LED's. Type A, Type B, and Type C warning lights must meet the Institute of Transportation Engineers Purchase Specification for Flashing and Steady Burn Warning Lights. Lights must be battery or solar powered. Provide the following types of warning lights as required:

1. Type A, low intensity flashing warning lights with a yellow lens.
2. Type B, high intensity flashing warning lights with a yellow lens and a visor to shield the lens from overhead sunlight.
3. Type C, steady burn warning lights with a yellow lens.
4. Type D, 360-degree steady burn warning lights with a yellow lens. Lenses for Type D lights must be visible for 360 degrees and the LED light source must emit light equally for 360 degrees. The LED light source must sustain constant brightness, evenly distributed throughout the lens until unable to maintain the intensity requirements specified in subsection 812.03.G.6.

C . **Portable Changeable Message Signs.** A Portable Changeable Message Sign (PCMS) consists of a message board with a Light Emitting Diode (LED) display, controller, solar/battery equipment, and power supply, mounted on a heavy-duty tow-able trailer. The materials,

equipment, and components of the PCMS will be commercial off-the-shelf products. Provide PCMS meeting the following:

1. **Message Board.** The PCMS message board must meet the following requirements:
   a. Measure at least 75 inches high by 114 inches long and be capable of displaying at least 3 lines of text, with at least 8 characters on each line. The display may be a line-matrix, or character-matrix design;
   b. Be either disk matrix, or LED, or both disk matrix and LED, capable of displaying three message lines with character height of 18 inches with 8 characters per line and a pixel matrix that is 5 pixels wide and 7 pixels high;
   c. Provide spacing between characters at least twice the element stroke width;
   d. The PCMS will be pre-loaded with at least an 18 inch standard font;
   e. The PCMS will display:
      i. All upper case letters;
      ii. Up to three lines of text per sign; and
      iii. All numerals 0 to 9.
   f. Include a photocell to regulate the internal lighting system. Disk matrix PCMS must have fluorescent lighting at the top and bottom of each message line. The PCMS must automatically adjust the display brightness based on lighting conditions to maintain legibility to motorists at all times.
   g. Include a sighting device to ensure required alignment.
   h. The display will be rainproof and use materials that resist degradation due to exposure to ultraviolet (UV) light.
   i. LED PCMS must have with forced air ventilation and with filtered inlets to maintain the interior temperature within temperature limits for LEDs.
   j. When displaying 18 inch characters, the display will be legible between distances of 200 to 1,000 feet, with a 20 degree LED viewing angle for both day and night operations. All 20 degree LEDs will have a nominal viewing cone angle of 20 degrees with a half-power angle of 10 degrees measured from the longitudinal axis of the LED.

2. **Controller.** PCMS controllers must be equipped with the following:

   a. Micro-processor based unit with a storage capacity of at least 50 preprogrammed messages;
   b. Non-volatile memory capable of retaining the messages during a non-power period;
   c. Password security feature to prevent unauthorized use;
   d. Message display capable of displaying a variable message at a rate of 0.25 second increments or correlated to 0.25 second increments; and
   e. Message display panel showing the message on the sign or created on the keyboard, and capable of giving the operator programming instructions.

3. **Electrical/Electronics.** Control cabinet for PCMS must be equipped with the following:

   a. Lockable door and an interior light for night operations.

b. Ventilated cabinet with screen covering on the vents to prevent damage from insects.
c. NEC 400-10 and NEC 400-14 compliant connections to control cabinets and sign board.
d. International Municipal Signal Association Wiring and Cable Specifications 20-1, 20-2, 20-5, and 20-6 compliant external electrical wiring.
e. Shock-mounted sign electronics, to reduce vibration. Provide shock mountings in the circuit designs, mechanical supports for drive transistors, and in the type of conformal coating.
f. Printed circuit boards mounted with spring-load tension screws for ease of access and removal.

4. **Power Supply.** Power supply to the PCMS must be a maintenance-free battery with one of the following backup systems:

   a. Generator with electric start, capable of continuous operation without refueling for 72 hours;

   b. Solar, with a built-in 115 VAC battery charger, capable of displaying a message for a minimum of 18 consecutive days without sun in 16 °F weather conditions.
   c. The power source will be able to continuously display a message of at least 24 characters, 24 hours per day, 7 days per week, for the duration that the PCMS is deployed in the field.

5. **Trailer.**
   a. The PCMS trailer must be painted highway orange.
   b. Delineate the trailer with a 2-inch by 36-inch strip, or an equivalent area, of reflectorized red and white conspicuity tape, installed on each of the four sides of the trailer. Locate these strips at each corner of the trailer.
   c. The trailer must conform to the Michigan Vehicle Code with a nonskid upper surface.
   d. The PCMS must be mounted to the trailer with a message board support that moves up, down, and rotates 360 degrees, with a safety bolt to prevent the message board from lowering once in the raised position. The support must be equipped with a hydraulic system that includes a manual pump with manual release for use as a backup for the electric hydraulic pump.
   e. The bottom of the sign panel must be at least 7 feet above the roadway in urban areas and 5 feet above the roadway in rural areas when in operating mode.

922.08. Temporary Traffic Signals and Street Lighting. The Contractor may provide used material and equipment for temporary traffic signals and street lighting with the Engineer's approval. The Contractor is responsible for performance and maintenance of used material throughout the life of the project.

922.09. Temporary Traffic Signals. Material for temporary traffic signals must meet the requirements of section 918 and section 921, the Institute of Transportation Engineers (ITE) for

Vehicle Traffic Control Signal Heads (VTCSH), "LED Circular Signal Supplement," and the MMUTCD.

922.10. Portable Temporary Traffic Signal System. Material for portable temporary traffic signal systems (PTS) must meet the requirements of section 918 and section 921, the Institute of Transportation Engineers (ITE) for *Vehicle Traffic Control Signal Heads* (VTCSH), "LED Circular Signal Supplement," and the MMUTCD.

A. **Trailer.** PTS trailer must be self-contained and meet the following requirements:

1. Consist of a vertical upright and horizontal mast arm to accommodate two 12-inch overhead traffic signal heads, mounted at the same height, and capable of providing at least 16 feet of clearance;
2. Allow at least one signal head on the horizontal mast to be placed over the traffic lane;
3. Conform to the wind load requirements specified by AASHTO, "Luminaries and Traffic Signals," with all equipment mounted, without the need for additional ballast;
4. Allow for transporting two signal trailers with one vehicle;
5. Have adequate structural integrity to allow for lifting and placing the PTS trailer, as required.
6. Conform to the Michigan Vehicle Code;
7. Be equipped with four stabilizing and leveling jacks, one on each corner of the trailer; and
8. Be delineated with a 2-inch by 36-inch strip, or an equivalent area, of reflectorized red and white conspicuity tape, installed on each of the four sides of the trailer. Locate these strips at each corner of the trailer.

B. **Traffic Signal Heads/Display Requirements.** The PTS system must meet the following requirements:

1. Conform to the physical display and operational requirements of conventional traffic signals, as specified in Part IV of the MMUTCD, ITE Specifications for LED Circular Signals, and NEMA TS-5 Standards;
2. Be equipped with two overhead, 12-inch, LED traffic signal heads with visors that extend beyond the signal head at least 10 inches;
3. Be equipped with traffic signal heads that can accommodate back plates and that rotate horizontally 180 degrees; and
4. Provide traffic signal head clearance height of at least 16 feet, measured from the bottom of the green signal housing or signal back plate, whichever is lowest, to the road surface.

C. **Power Requirements.** Each PTS trailer must be equipped with batteries capable of operating the traffic signal system for at least 21 days at 72 °F without charging. Provide a charging system that includes at least 450 watts of solar collection capability, an onboard battery charger for use with a 110 Volt power source and an onboard monitoring system, capable of regulating and providing a visual display of the battery voltage and solar input.

The PTS system must be fully operable if connected to a 110 Volt power source.

D. **PTS Operational Requirements.** PTS must have an operating system that includes a conflict monitoring system that conforms to NEMA TS-5 standards and is capable of operating in a fixed time, traffic actuated, or manual control mode. The fixed time mode operation option must be capable of providing at least five automatic traffic signal timing changes in a 24-hour period. The traffic actuation mode option must allow minimum and maximum green time programming to extend the green times in predetermined programmable segments.

In addition, the PTS operating system must meet the following requirements:

1. Control at least seven traffic phases and include programmable green times from 3 seconds to 250 seconds, and red times from 1 second to 250 seconds, in 1 second increments;
2. Facilitate standby modes of red, red flash, and yellow flash;
3. Capable of interfacing with a remote monitoring system that will report signal location, battery voltage, and system default. Ensure the monitoring system is not limited to cellular phone coverage areas, and remains operational regardless of location;
4. Can accommodate a pre-emption system with optical activation that provides a priority green phase in the direction of equipped approaching emergency vehicles;
5. Allows for connect and control of the PTS by a standard NEMA type controller;
6. Be equipped with diagnostic capabilities in the event of a system failure and can identify the failure to expedite return to full operational mode; and
7. Has an integrated mechanism, capable of recording system malfunctions, and providing a printout of this record that must be kept with the PTS, including the following:

    a. Date and time of system failure,
    b. Service and maintenance performed,
    c. A description of the equipment serviced and why the service was performed,
    d. Repairs made to the unit, and
    e. Past operational history of the unit.

E. **Actuation Requirements.** PTS system must have traffic actuation capabilities that include microwave motion sensors, video detection, and in-pavement loops. PTS system must be capable of operating with a motion and true-presence actuation system.

F. **Communication Requirements.** Equip the PTS system to communicate via hardwire connection or wireless radio link communication. If using the hardwire communication, do not obstruct vehicular and pedestrian traffic or intrude into the work area while deploying the communication cable. If using the radio link communication option, ensure the radio system conforms to Federal Communication Commission (FCC) requirements and applicable state and local requirements.

G. **Default Requirements.** Program the PTS system to revert to a red, red flash, or yellow flash mode upon system failure. Set the default setting to red flash or a preprogrammed operating

mode to ensure safety in the work zone. Upon failure, ensure the PTS system can notify Contractor personnel via the remote monitoring system.

922.11. Traffic Regulator Equipment.

A. **Stop/Slow and Stop/Stop Sign Paddle.** Equip traffic regulators with a stop/slow or stop/stop paddle meeting the MMUTCD. Do not use red flags, except in case of emergencies.

B. **Traffic Regulator's High-Visibility Safety Apparel.** Traffic regulators must wear high visibility safety apparel as specified in the MMUTCD.

C. **Traffic Regulator Apparel.** Ensure traffic regulators wear head, eye, and foot protection as specified in the provisions of Construction Safety Standard Part 6 "Personal Protective Equipment," R408.40601 et seq, of the Michigan Administrative Code.

D. **Two-Way Hand-held Radio System.** Provide a two-way hand-held radio system with power to send and receive signals over the length of the intended flagging operations. Provide a backup system on standby, readily available to the regulators. The hand-held radio system must not be attached to a vehicle.

922.12. Miscellaneous.

A. **Dust Palliative.** Calcium chloride dust palliative in solid or liquid form must conform to the requirements of ASTM D98, except as modified by this subsection

Solid-form calcium chloride must have a minimum concentration of 77 percent $CaCl_2$, with 100 percent passing the ⅜ inch sieve, and from 0 to 5 percent passing the No. 30 sieve.

Liquid-form calcium chloride must be a solution with a concentration of 33, 35, or 38 percent $CaCl_2$.

Provide two copies of a report, with each load, that includes the following information:

1. The volume in gallons or weight of solution delivered, or the weight of solids delivered;
2. The concentration of solids or solution delivered, expressed as the percent of $CaCl_2$;
3. Equivalent tons of $CaCl_2$ determined for the concentration shown on the delivery report in accordance with Table 922-1; and
4. Copy of manufacturer's certification that the calcium chloride conforms to this section.

Table 922-1 Equivalent Weight of Calcium Chloride		
Concentration, %	**Pounds of Calcium Chloride**	
	Per Gallon of Solution	**Per Pound of Solution or Solids**
33	3.7	0.33
35	3.9	0.35
38	4.4	0.38
77	N/A	0.77

If the manufacturer's certification indicates a solution does not conform to the concentration stated on the report, the Engineer will use the value from Table 922-1 for the next lower concentration to which the solution conforms to calculate the equivalent weight of calcium chloride.

If the manufacturer's certification indicates a solution has a concentration less than required for a 33 percent concentration, or a quantity of solids has a concentration less than required for 77 percent concentration, the Engineer will calculate the weight of equivalent calcium chloride using the required concentration.

If manufacturer's certification indicates a concentration of calcium chloride greater than stated on the delivery report, the Engineer will calculate the weight of equivalent calcium chloride using the concentration indicated on the report.

Section 923. WATER MAIN MATERIALS

923.01. General. Materials for water main work must meet the requirements of this section, AWWA Specifications, and the requirements of the water main owner (Municipality).

923.02. Pipe. The Department considers lines 2 inches or less in diameter to be water services not water mains. Water service pipe must be Type K copper. The minimum water service size is 1 inch.

Water main must be ductile iron pipe manufactured in accordance with ANSI/AWWA C150/A21.50 and C151/A21.51.

Pipe must be lined with a standard thickness cement mortar lining sealed with a bituminous seal coat in accordance with ANSI/AWWA C104/A21.4. The outside of the pipe must be coated with the standard bituminous seal and each length of pipe must be marked with the following information:

A. Metal thickness class;
B. Net weight of the pipe without lining;
C. The nominal size; and
D. The manufacturer's identifying symbol.

Provide “push on” joints. Provide gaskets meeting the requirements of AWWA C111/A21.11. If shown on the plans, provide nitrile gaskets. Provide, for each joint, two serrated silicon bronze electrical continuity wedges or an external conductor connection meeting the standards of the Municipality.

Provide ductile iron pipe and fittings with the standard joint restraint system required by the Municipality.

Fittings, plugs, and gaskets for ductile iron pipe must meet the requirements of AWWA/ANSI C110/A21.10, ANSI/AWWA C111/A21.11 and ANSI/AWWA C153/A21.53. Cement mortar linings for fittings must meet the requirements of ANSI/AWWA C104/A21.4.

923.03. Gate Valves. Provide resilient wedge valves, for use in water distribution systems, with a nominal diameter from 6 inches to 12 inches, rated for at least 200 psi. Valves must meet the requirements of AWWA C509.

Provide valves with the end types shown on the plans, or conforming to the conditions encountered on the project, as necessary to complete installation. Provide manually operated valves with non-rising stems and provide a standard AWWA square operating nut of the Municipality’s standard size.

923.04. Valve Boxes and Curb Boxes. Valve boxes and curb boxes must be made of cast iron, conforming to the requirements of ASTM A48/A48M for Class 30B and AASHTO M 306. Each box must be a screw type and consist of five sections: base, center, extension, top, and cover. The cover must be marked "Water".

923.05. Tapping Valves. Tapping valves include a gate valve meeting the requirements of AWWA C509 and a tapping sleeve allowing a wet tap. Size the valve body and seat opening to accommodate the tapping machine cutters. The tapping sleeve must be compatible with the existing pipe material.

923.06. Corporation Stops and Curb Stops. Corporation stops and curb stops must meet the requirements of AWWA C800.

923.07. Service Saddles. Provide solid stainless steel service saddles with a single bolt band.

923.08. Fire Hydrants. Provide Municipality-standard fire hydrants.

923.09. Polyethylene Encasement. Polyethylene encasement must be manufactured using 8 mil thick virgin polyethylene in accordance with ASTM D1248.

Provide the tube size recommended by the manufacturer to protect the pipe and fitting sizes.

Provide adhesive tape for the polyethylene tube as recommended by the manufacturer. Tape for repairing damage to the polyethylene must have a life expectancy equal to the life expectancy of the polyethylene.

923.10. Casing Chocks. Provide casing chocks or wooden skids in accordance with the requirements of the Municipality.

DIVISION 10 – CONCRETE MIXTURES

Section	Title	Page No.
1001	Concrete Production Equipment and Facilities	XX
1002	Contractor Quality Control for Concrete	XX
1003	Quality Assurance (Acceptance) for Concrete	XX
1004	Portland Cement Concrete Mixtures	XX
1005	Mortar and Grout Mixtures	XX
1006	Patching, Repair, and Overlay Mixtures	XX

NOTES

DRAFT – July 2020

Section 1001. CONCRETE PRODUCTION EQUIPMENT AND FACILITIES

1001.01. Description. This section consists of the requirements for equipment and facility requirements for making portland cement concrete.

1001.02. Materials. Provide materials in accordance with the following:

Portland Cement 901
Slag Cement 901
Fly Ash 901
Coarse Aggregate 6A, 6AA, 6AAA, 26A, 29A, 17A 902
Intermediate Aggregate 902
Fine Aggregate 2NS, 2SS 902
Concrete Admixtures 903
Water 911

1001.03. General Requirements.

A. **Certified Batching Plants.** Provide portland cement concrete from certified portable and stationary concrete batch plant facilities that meet the current requirements of the National Ready Mixed Concrete Association (NRMCA) or other Department approved certification programs for automatic control and automatic systems including the following:

1. **Plant Certification.**

   a. **Stationary Concrete Batch Plants.** Maintain plant equipment, facilities, and associated weighing and batching devices during production. Schedule inspections, and maintain valid plant certification. Provide for scale inspections at intervals no longer than six months. Enlist the services of a Michigan Registered Service Agency to certify the calibration and working order of the weighing system. Check the batching accuracy of volumetric admixture dispensers and volumetric water batching devices (including water meters) at intervals no longer than six months.

      Provide all documentation of inspections and certifications to the Engineer.

   b. **Portable Concrete Batch Plants.** At the start of production, annually thereafter, and after every move, ensure portable concrete batch plants meet the requirements of subsection 1001.03.A.1.a. Provide documentation of inspections and certifications to the Engineer.

      Clearly display current inspection reports, certifying that scales and volumetric batching devices meet the required tolerances at each plant facility. Display a photocopy of the inspection checklist, completed by the inspecting Agency, at each plant facility before providing material to the project. Display the Certificate of Conformance at each plant facility.

The Department may inspect batching equipment, facilities, and associated weighing and batching devices, and review the qualifications of private plant and scale inspectors, or inspection agencies.

2. **Batch Tolerances.** Provide batching equipment meeting the tolerances specified in the NRMCA checklist as follows:

   a. **Cementitious Materials.** Provide cementitious materials within ±1 percent of the required weight, or for loads less than 30 percent of the scale capacity, within ±0.3 percent of the scale capacity.

   b. **Aggregates.** Provide aggregates within one of the following tolerances:

      i. ±2.0 percent of the required weights;
      ii. ±1.0 percent of the required intermediate and final cumulative weights in aggregate batchers; or
      iii. ±0.2 percent of the scale capacity for intermediate weights below 15 percent of the scale capacity and for final cumulative weights, 30 percent below scale capacity.

   c. **Water.** Provide water within ±1.5 percent of the required quantity, or ±1.0 gallon, whichever is greater

   d. **Admixtures.** Provide admixtures within ±3 percent of the required quantity, or plus or minus the minimum dosage rate per 100 pounds of cementitious material, whichever is greater.

3. **Capacity.** Provide weighing and batching equipment capable of weighing, in a single weighing, the quantity of each material required to complete the final batch, unless the plant is equipped to weigh the materials using one of the following alternate methods:

   a. A device that automatically cycles to provide the required number of increments; or
   b. An automatic recording device that provides a permanent record of the quantity of cement, aggregate, and water measured in each individual batch.

4. **Ticketing System and Weekly Summary.** Provide a computer generated ticket with the following information for each batch:

   a. Name of concrete producer;
   b. Plant designation where batched;
   c. Ticket serial number;
   d. Truck number or designation;
   e. Name of Contractor;
   f. MDOT job number;

g. MDOT grade of concrete;
h. Cubic yards of concrete;
i. Delivery date;
j. Batch loading time;
k. Maximum allowable on site addition of water;
l. Extra water added on site; and
m. Contractor's signature or initials.

Provide a space on each ticket for the Engineer to sign. If producing concrete for more than one contract, the concrete producer must include a signed certification statement on each delivery ticket stating that all concrete materials are tested and approved, or certified as meeting Department specifications.

If producing concrete at a dedicated batch plant for only one paving contract, the Department does not require the Engineer's signature or the concrete batch plant's certification statement on each delivery ticket. The Department requires one signature for the daily production accompanied by the concrete batch plant's daily summary of concrete production.

Provide an automated printout of target and actual batch weights with each delivery ticket. If target and actual batch weight information is computer generated on a separate document, include the serial number of the corresponding delivery ticket, or other means of cross reference. Attach the automated printout of target and actual batch weights to the corresponding delivery ticket. Collect tickets accompanying loads of concrete and provide them to the Engineer.

Provide a sequentially numbered weekly certification report summarizing daily batching operations with shipments identified by contract to the MDOT region materials staff for contracts located in their respective region.

B. **Non-Certified Batching Plants.** Provide automatic cement and aggregate batchers.

1. **Weighing and Batching Equipment.** Provide weighing and batching equipment capable of weighing, in a single measurement, the quantity of each material required to produce proportioned concrete, unless the plant is equipped to weigh materials using one of the following methods:

   a. A device that automatically cycles to provide the required number of increments for a batch; or
   b. A Department-approved automatic recording device that shows the number of increments placed in each batch.

   With either method, make batch increments of equal size, unless the weighing equipment automatically meets the requirements specified in subsection 1001.03.A.3 for varying batch sizes.

Weigh cement and aggregates on separate scales in separate weigh hoppers except in plants equipped to weigh cement cumulatively with aggregates. In plants equipped to weigh cement cumulatively with aggregates, first weigh cement in an enclosed compartment of a single weigh hopper. If weighing cement cumulatively with aggregates, conform to the batching tolerances specified in subsection 1001.03.A.2.

Provide cement and aggregate in accordance with subsection 1001.03.A.2, except provide cement within 1 percent of the cement batch weight. Provide aggregates within 1 percent of the final cumulative weights, or 94 pounds, whichever is less.

2. **Bins and Hoppers.** Provide the following:

   a. Equipment to load aggregate bins capable of transporting and discharging the aggregate into the bins without spilling into other stockpiles, bins, or compartments;
   b. Weather tight bins for each cementitious material;
   c. Weighing hoppers of a size and shape capable of holding the material without leaking, supported entirely on the scales;
   d. Hoppers and appurtenances designed and constructed to prevent loss of material during weighing and discharge; and
   e. Protection for the material against loss or damage while transferring from the weigh hoppers to the mixer.

3. **Scales.** Enlist the services of a Michigan Registered Service Agency to certify the calibration and working order of the weighing system. Display current inspection reports certifying that scales and volumetric batching devices meet the required tolerance at each plant facility. Send current copies of inspection reports to the Engineer prior to production and at intervals no longer than six months, thereafter.

4. **Automatic Controls.** Provide automatic controls for batching equipment with individual starting mechanisms for each material, or a single starting mechanism that when actuated controls all functions of the weighing and metering operations for the materials. For each material weighed, ensure placement of the required weight in the weigh hopper and that the scale indicator balances within the required tolerances for at least 1 second before continuing succeeding operations.

   Equip the automatic control for each batching scale system with a device for stopping the automatic cycle in the underweight and overweight check positions for each material.

   Electrically operate and interlock automatic batchers to provide the following controls for each material weighed:

   a. Interlock the hopper inlet mechanism to prevent opening if the discharge gate is open; and
   b. Interlock the hopper discharge mechanism to prevent the following:

      i. Opening while filling the hopper;

ii. Opening before the full batch is in the hopper and the scale balanced;
iii. Opening if the batch in the hopper is overweight or underweight by more than the required tolerances; or
iv. Closing, locking, and starting the next batch before emptying the hopper to less than 1 percent of the batch weight for the scale.

Do not allow the automatic control system sensing mechanism to exert a force on the scale weighing mechanism or indicating mechanism within the weighing range of the indicator.

Equip each dial scale system with a removable dial puller that inspectors can attach to the dial lever system to check the automatic control system settings by moving the dial smoothly and slowly through its range.

Provide weighing systems equipped with load cells and a device capable of simulating load conditions to enable verification of proportioning setpoints and interlocking tolerances for each material. Equip the device with ranges or adjustments to enable a display of each consecutive value of digital indication, held for the time necessary for inspection.

Ensure the plant operator completes the automatic control system checkout procedure periodically, as requested by the Engineer.

5. **Dispensers and Controls for Liquid Admixtures.** Provide dispensers capable of measuring the admixture volumetrically. Ensure batching controls are clearly visible to allow the operator to monitor the accuracy of admixture delivery. Start the admixture dispenser system using the single starting mechanism for the entire batching system, or for one of the primary materials. Introduce the admixture into the sand, the water line, or directly into the mixing drum.

   Use a separate dispenser for each admixture. If using more than one admixture, avoid intermixing admixtures before introduction into the batch by dispensing admixtures as follows:

   a. Outlet into different portions of the sand in the weigh hopper;
   b. Outlet into different locations in the water line;
   c. Use separate outlets into the sand, the water line, and the mixer drum; or
   d. Cycle through a common outlet to dispense only one admixture at a time.

   Provide a dispenser piping system free of leaks with valves to prevent backflow or siphoning.

   Provide a dispenser system for admixtures capable of measuring and dispensing the quantity required for each batch. Include a device on the dispensing system showing the flow of admixture, or showing if admixture is in the dispenser.

Provide a dispensing device with an accuracy within 3 percent of the required material volume batched, or within 1.0 fluid ounce, whichever is greater. Equip the plant with the calibrated devices to check the dispensed volume to the required accuracy.

Provide batching controls that start the batching operation and stop the flow automatically when the required volume is measured. Ensure controls show when the batching operation is complete.

Interlock the admixture dispenser system with the batching operations to ensure the dispenser resets to start before charging. Interlock the dispenser to ensure it does not start admixture discharge unless the controls are cleared of the previous batch with the volumetric devices resetting to start or signaling empty.

6. **Water Measuring Equipment.** Measure water by volume or weight. If directed by the Engineer, demonstrate the accuracy of water measuring equipment. Ensure the water system discharges the required water into the mixer drum during the first one-third of the required mixing time and stops the flow automatically after discharging the required quantity of water. Provide an indicator to show the quantity of water used in each batch.

7. **Mixers.** Provide mixers meeting the requirements of this subsection. Ensure mixers combine the aggregates, cementitious materials, water, and admixtures and discharge the mixture without segregation.

   Provide central batch type mixers with a timing device that automatically locks the discharge mechanism during mixing and releases at the end of the mixing period. Provide a mixer capable of mixing the entire volume of batched material in one operation.

   Provide revolving drum truck mixers in good condition. Ensure mix materials, including water, do not leak or spill from the time of charging until discharged. Equip the mixer with a functioning revolution counter to indicate the number of revolutions of the drum. Use truck mixers capable of removing wash water collected in the mixer drum.

   Ensure mixers have an attached metal plate showing the following information:

   a. Serial number;
   b. Maximum mixing capacity in volume of mixed concrete;
   c. Mixing speed of the drum; and
   d. The maximum agitating capacity in volume of mixed concrete, or on the truck mixers and agitators, the agitating speed of the drum or blades.

8. **Concrete Hauling Units.** Provide hauling units capable of delivering concrete in a non-segregated condition. Maintain equipment in good condition. Ensure mix materials, including water, do not leak or spill from the time of loading until discharged.

9. **Continuous Batching and Mixing.** Provide continuous batching and mixing equipment meeting the requirements of ASTM C685/C685M. Use only continuous batching and mixing equipment for proportioning latex modified concrete or prepackaged hydraulic fast set patching mixtures.

10. **Inspector Facilities.** Provide space for the inspector to observe batching operations, and when requested by the Engineer, provide desk space in commercial plants, for the inspector's use.

    If the contract requires determination of the water to cementitious material ratio, provide sample-drying equipment, work, and storage areas for performing moisture tests and storing equipment.

C. **Waiver of NRMCA Certification and/or Automation Requirements.** If no fully automated certified facility is located within 25 miles of the project, the Engineer may waive certification, automation requirements, or both.

1. **Waiver of Certification.** The Engineer may allow the use of non-certified automated plants if no fully automated certified facility is located within 25 miles of the project. Provide an automated plant that meets the requirements of subsection 1001.03.B.

2. **Waiver of Automation and Certification.** The Engineer may allow the use of non-certified, manual plants if no automated plant with a batching system meeting the requirements of subsection 1001.03.B is located within 25 miles of the project.

   If no automatic plant is located within 25 miles of the project, the Engineer will not require the following devices specified in subsection 1001.03.B:

   a. Automatic incremental batch cycling devices;
   b. Interlocking devices for cement and aggregate;
   c. Electrical tolerance indicator devices; and
   d. Automatic dispensers for admixtures.

D. **Providing and Handling Materials.**

1. **Aggregates.** Provide, stockpile, and handle aggregates to minimize segregation. Place each aggregate source and type in a separate bin or stockpile. Do not intermix aggregate sources. Provide firm, level ground for stockpiles and clean the area of deleterious material before importing aggregates. Do not use the bottom 12 inches of the stockpile if the stockpile areas are not paved. Do not use lumps of frozen aggregate. Use appropriate equipment and stockpile management procedures to ensure that the aggregates are maintained within specifications.

Maintain a uniform aggregate moisture content, with no evidence of surplus water, during each day of concrete production. Keep stockpiles of highly absorptive aggregates at a uniform and well saturated condition using the methods specified in the Department-approved Contractor quality control plan for concrete.

Store aggregates for Department work in piles or bins separate from aggregates for other work. If the aggregate consists of a blend of at least two gradations, stockpile each gradation separately.

2. **Cementitious Material.** Store cementitious material provided in bulk form in separate weatherproof bins. Do not use wet or contaminated material.

   Before refilling bins with new material of a different type or source, empty bins to a quantity less than the quantity necessary for two concrete batches.

   Changes in cementitious material sources will require a new mix design and accompanying Job Mix Formula (JMF).

   If requested by the Engineer, provide a copy of the shipment notice showing the quantity of each cementitious material for each shipment and certification that material meets Department specifications.

3. **Chemical Admixtures.** Handle, store, and protect chemical admixtures in accordance with the manufacturer's recommendations.

E. **Mixing Concrete.**

1. **General.** Produce and deliver ready-mixed concrete as central-mixed or truck-mixed concrete. The Department considers central-mixed concrete completely mixed in a central mixer and transported to the project in a truck agitator, a truck mixer, or Department-approved non-agitating equipment. The Department considers truck-mixed concrete completely mixed at the plant site in a truck mixer with a functioning revolution counter.

   Provide communication service from the project to the batching plant and make the service available to the Engineer during concreting operations.

   Empty the mixer drum completely after each batch and before recharging. Do not exceed the capacity of the mixer shown on the metal plate attached to the mixer. For agitating units and truck mixers used to transport central-mixed concrete, do not exceed the manufacturer's recommended batch size for the maximum agitating capacity of the equipment.

2. **Batch Mixing.** Rotate the drum or blades at the speeds recommended by the manufacturer and shown on the metal plate attached to the mixer. Measure mixing time from the time all cementitious materials and aggregates are in the mixer until the start of concrete discharge.

For multi-compartment mixers the mixing time includes the transfer time between drums. Charge the ingredients into the mixer so some water enters before the cementitious materials and aggregate, and all the water enters the drum before ⅓ of the required mixing time elapses.

a. **Central Mixed Concrete.** Mix each batch of central mixed concrete for 45 seconds for turbine mixers and 60 seconds for revolving drum and pugmill mixers. For revolving drum and pugmill mixers with a capacity of 1 cubic yard or less, mix for at least 90 seconds.

b. **Truck Mixed Concrete.** Mix each batch of truck mixed concrete for more than 70 revolutions at mixing speed.

3. **Elapsed Time.** Do not exceed the time limits specified in Table 1001-1 from the time of charging the mixer to complete concrete discharge.

   Charging begins when the cementitious materials contacts the mixing water or damp aggregates.

   For agitating units and truck mixers, if the time from charging the mixer to complete discharge may exceed 30 minutes, continuously agitate the concrete.

Table 1001-1
Time Between Charging Mixer and Placing Concrete
(a)

Type of Unit	Concrete Temperature (ASTM C1064/C1064M)		
	<65 °F	**65 °F – 85 °F**	**>85 °F**
Open Top Trucks (b)	60	45	30
Open Top Agitating Units (b)	60	60	30
Closed Top Agitating Units and Truck Mixers	90	60	45
Truck Mixers and Closed Top Agitating Units with Concrete Containing Retarding Admixture (c)	120	90	70

a. Times shown in this table are in minutes.
b. Not allowed for structural concrete.
c. Superstructure concrete must meet the time limits for closed top agitating units and truck mixers.

4. **Additional Water at Placement Site.** The QC Administrator may add water to concrete transported in truck mixers or agitators once prior to discharge or placement. The one-time addition of water is permitted to be added in one or more increments only if it is needed for the concrete to achieve the slump specified in the approved mix design and the batch in the truck mixer or agitator does not exceed the rated mixing capacity. The final increment of water to achieve the slump specified shall be no later than 15 minutes after the first water addition. Do not add more water than specified in the Department-approved concrete mix design, based

on the maximum water content, as defined on the approved JMF, and maximum water to cementitious material ratio. After adding water, provide at least 30 revolutions of the truck mixer drum at mixing speed before discharging concrete. Complete additional mixing at the project within the maximum time specified in subsection 1001.03.E.3. Document water added after batching and the resulting water to cementitious material ratio. Provide the information to the Engineer daily. Do not add water to the concrete during or after discharge or placement. Do not add water for the purpose of retempering the concrete. Do not add water in truck chutes or pump or slipform hoppers beyond the minimum necessary to wet the surfaces for lubrication.

5. **Concrete Temperature Requirements.** Produce concrete that will ensure that at the time of concrete placement, the concrete temperature will be from 45 °F to 90 °F.

   If heating concrete constituents, heat the water, the aggregates, or both to meet the minimum required placement temperature. Do not heat aggregates to more than 150 °F. Do not exceed a plastic concrete temperature of 80 °F, except if placing concrete in insulated forms. Do not exceed a plastic concrete temperature of 70 °F if placing concrete in insulated forms. Mix the water with the aggregates before adding the cementitious materials.

   Use aggregates free of ice and frozen lumps at time of batching. Heat aggregates in stockpiles or bins using steam or hot water coils, live steam, or by indirect hot air. Do not use direct flame to heat coarse aggregate. During batching operations, compensate for accumulated condensation from heating to maintain the slump within the required limits

1001.04. Measurement and Payment. The cost of providing portland cement concrete pavement and structural mixtures is included in unit prices for related pay items.

Section 1002. Contractor Quality Control for Concrete

1002.01. Description. This work consists of providing and maintaining an effective concrete quality control plan for all concrete production and placement on the project.

The Engineer will not sample or test for quality control or assist in controlling the Contractor's production operations.

1002.02. Materials. None specified.

1002.03. General Requirements.

A. **Standard Reference Procedures.** The following ASTM test methods apply to the Department's established procedures for sampling and testing

1. ASTM C31/C31M – Standard Practice for Making and Curing Concrete Test Specimens in the Field
2. ASTM C39/C39M – Standard Test Method for Compressive Strength of Cylindrical Concrete Specimens
3. ASTM C78/C78M – Standard Test Method for Flexural Strength of Concrete (Using Simple Beam with Third-Point Loading)
4. ASTM C138/C138M – Standard Test Method for Density (Unit Weight), Yield, and Air Content (Gravimetric) of Concrete
5. ASTM C143/C143M – Standard Test Method for Slump of Hydraulic-Cement Concrete
6. ASTM C172/C172M – Standard Practice for Sampling Freshly Mixed Concrete
7. ASTM C173/C173M – Standard Test Method for Air Content of Freshly Mixed Concrete by the Volumetric Method
8. ASTM C231/C231M - Standard Test Method for Air Content of Freshly Mixed Concrete by the Pressure Method
9. ASTM C293/C293M - Standard Test Method for Flexural Strength of Concrete (Using Simple Beam with Center-Point Loading)
10. ASTM C1064/C1064M – Standard Test Method for Temperature of Freshly Mixed Hydraulic-Cement Concrete

B. **Quality Control Elements.** Prepare, implement, and maintain a quality control (QC) plan for concrete, specific to the project, that will provide quality oversight for production, testing, and control of construction processes. The QC plan must be in conformance with the contract and must identify all procedures used to control production and placement including when to initiate corrective action to maintain the quality and uniformity of the work.

Submit the QC plan to the Engineer for review a minimum of 10 working days before the start of related work. The Engineer will notify the Contractor of any objections relative to the content of the QC plan within 5 working days of receipt of the QC plan. Do not begin concrete placement before approval of the QC plan by the Engineer. If the approved QC plan fails to provide

acceptable work, or acceptable control of the work, the Engineer may require the Contractor to revise the QC plan. Revisions to the QC plan must be approved by the Engineer prior to resuming work.

If the local average minimum temperature is forecast to be below 40 °F for 10 consecutive days, submit a revised QC plan, for the Engineer's approval, addressing, in detail, changes in materials, concrete batching and mixing processes, construction methods, curing, and protection of the in situ concrete to ensure that the necessary quality characteristics of the hardened concrete product will not be compromised as a result of the cold weather. The revised QC plan must be approved by the Engineer prior to cold weather concrete placement. Do not remove supplementary cementitious material from the concrete mixture.

Project-specific items required in the QC plan include, but are not limited to the following:

1. Organization Chart;
2. QC Administrator and contact information;
3. The name(s), credentials, and contact information of the on-site QC staff responsible for QC testing and QC plan enforcement;
4. Methods for interaction between production and QC personnel to implement timely corrective action including suspension of work;
5. Coordination of activities;
6. Documentation, procedures, and submittals;
7. Project and plant specifics;
8. Certifications for concrete production facilities;
9. Current testing equipment calibration documentation, including calibration factor;
10. Sampling, testing, and initial curing facilities for QC and QA strength test specimens;
11. Stockpile management plan;
12. Corrective action plan;
13. Mixing time and transportation, including time from batching to completion of delivery and batch placement rate (batches per hour), along with the manufacturer's documentation relative to the batching equipment's capabilities in terms of maximum mixing capacity and minimum mixing time;
14. Placement and consolidation methods including monitoring of vibration, depth checks, and verification of pavement dowel bar alignment;
15. Process for monitoring stability of air content of fresh concrete during concrete production and placement;
16. Hot and cold weather protection considerations and methods;
17. Control charts with action and suspension limits;
18. Verification for non-deleterious alkali-silica reactivity (ASR), as specified in the contract;
19. Mix design, JMFs, and supporting documentation;
20. Proposed production lot size and location for use of each JMF on the project;
21. Frequency of sampling, testing, and yield verification;
22. Handling, protection, initial curing, and transporting of strength test specimens;
23. Methods to monitor construction equipment loading and open-to-traffic strengths;

24. Finishing and curing procedure;
25. Ride quality control; and
26. List of QC records to be submitted to the Engineer in accordance with subsection 1002.03.C.

C. **QC Records.** Maintain complete records of all QC tests and inspections. Document what action was taken to correct deficiencies. Include sufficient information to allow the test results to be correlated with the items of work represented.

Furnish one copy of all QC records, including test reports, to the Engineer within 24 hours after the date covered by the records in a format acceptable to the Engineer.

If the Engineer is performing QA sampling and testing at the same time the Contractor is performing QC sampling and testing, all associated QC records must include the appropriate production lot identification number that correlates with the Department's QA production lot identification number.

D. **Personnel Requirements.** Individuals performing QC tests must demonstrate that they are proficient and capable of sampling and testing concrete or aggregate in accordance with the associated test procedures and Department requirements prior to the beginning of related work. Any JMF adjustments must be made by a Michigan Concrete Association (MCA) certified Michigan Concrete Technician Level II.

The QC Administrator must have full authority and responsibility to take all actions necessary for the successful implementation of the QC plan, including but not limited to, the following:

1. Monitoring and utilizing QC tests, control charts, and other QC practices to ensure that delivered materials and proportioning meet specification requirements;
2. Monitoring materials shipped to the project, prior to their use, to ensure their continued compatibility toward producing consistent quality;
3. Periodically inspecting all equipment utilized in transporting, proportioning, mixing, placing, consolidating, finishing, and curing to ensure proper operation;
4. Monitoring stockpile management, concrete batching, mixing, transporting, placement, consolidation, finishing, and curing to ensure conformance with specification requirements;
5. Maintaining and submitting all QC records and reports;
6. Directing the necessary corrective action to ensure continual conformance within the QC action limits;
7. Suspending production for the project when suspension limits are exceeded; and
8. Conducting or monitoring adjustments to the JMF

E. **QC Laboratory Requirements.** Laboratories, including field laboratories and all associated testing equipment that prepare concrete mixes or perform QC testing, must demonstrate to the Engineer that they are equipped, staffed, calibrated, and managed to be capable of batching and testing concrete in accordance with the applicable test methods and procedures. Mix designs and their accompanying JMFs must include a statement signed by a MCA certified Michigan

Concrete Technician Level II that all applicable standard test methods have been followed in verifying the mix design and JMF.

F. **QC Sampling and Testing.** Do not continue production of nonconforming work. Perform sampling, testing, and initial curing according to ASTM C31/C31M.

1. Provide the Engineer a minimum of 24 hours notification prior to each concrete placement.

2. Conduct startup sampling and testing of concrete for temperature, slump, density (unit weight), and air content on the first load. Do not place concrete until testing verifies that the fresh concrete properties have not exceeded the QC action and suspension limit thresholds specified in Table 1002-1. Continue testing subsequent loads as described in the QC plan, for each grade of concrete delivered to the work site each day. The QC sampling and testing must be independent from the Department's QA sampling and testing.

Table 1002-1
QC Action and Suspension Limits

Quality Characteristic	Action Limits	Suspension Limits
Air Content (percent)	See Note 1 Below	< 5.0 or > 9.0
Air Content Loss (percent)		Greater than 1.5
Conc. Temp. (deg. F)	As Defined in the Contractor QC plan	< 45 or > 90 at time of placement
Slump (max.) (inch)		See Table 1004-1, footnotes a through l
Density (unit weight)		N/A
Aggregate Gradation	Refer to procedure for Optimized Aggregate Gradation included in the contract.	

Note:
1. Action limits for air content must be defined in the Contractor QC plan and cannot be < 5.5 or > 8.5.
2. Suspend work if air content is < 5.0 or > 9.0 percent after pump or paver, regardless of the air content loss.
3. Concrete exceeding the maximum specified limit for slump and temperature requirements must be rejected regardless of the total mixing time at the time of arrival to the project.

3. Prior to initial concrete placement, the testing personnel for both the Engineer's QA and Contractor's QC will conduct side-by-side correlation testing of the same concrete sample to verify correlation of both the Department's and the Contractor's test results for air content of fresh concrete. A sample is considered a representative quantity of concrete taken during production which is used to measure the quality characteristics for the concrete. Additional side-by-side correlation testing will be conducted whenever there is a change in QC's or QA's equipment or testing personnel for the project, or if the Engineer determines that there is a significant difference between the QC and QA test results.

If the air content results of the side-by-side tests conducted by the QC and QA testers and equipment differ by more than 0.8 percent air by volume of concrete, a referee air content test must be conducted by a third party, designated by the Engineer but independent of the project, before the begining or continuation of concrete placement in order to resolve issues associated with non-correlation.

4. Provide the curing facilities in accordance with subsection 1003.03.G prior to start of concrete production.

5. Perform QC sampling and testing for air content loss of fresh concrete that is either slip formed or pumped as described in the QC plan. Sample and test a representative haul unit of concrete immediately after its discharge but before the slipform paver or pump hopper. Sample and test the concrete representing the same haul unit, again, after the slipform paver or after discharge from the pump (without interruption or alteration of the pumping operation).

   If the difference in measured air content between the two test locations for the same concrete is greater than 1.5 percent air by volume of concrete, suspend operations and administer corrective action. Resume concrete placement only after taking the necessary corrective action to reduce the loss in air content of fresh concrete between the two test locations, as approved by the Engineer.

   If corrective action is required, document the corrective action(s) in the QC records and make the necessary adjustments in the QC plan. The Engineer may require the Contractor to administer additional QC sampling and testing if the Engineer determines the Contractor's current QC sampling and testing methodology is shown to be insufficient to ensure continual control of the quality of the concrete.

6. Take the appropriate corrective action, as described in the QC plan, when QC testing shows the QC action limits for any quality characteristic are exceeded. Suspend production if any of the QC suspension limits are exceeded or if the corrective action is not sufficient to restore the quality to acceptable levels.

7. Resume production only after making all necessary adjustments to bring the mixture into conformance with all applicable specifications and receiving approval to resume work from the Engineer. Document these adjustments in the QC records.

G. **Work Progress Specimens.** Ensure that the strength of pavement and structure concrete meet the requirements of subsection 104.11.B for opening to construction traffic or vehicular traffic, removing shoring or forms, or similar operations. Determine concrete strength by making a series of test cylinders or beams. Cure the specimens in the same manner as the pavements or structures they represent. Allow the Engineer to witness testing of work progress cylinder or beam specimens and non-destructive testing, including calibration tests. Work progress samples are defined as an average of two specimens. Adjust operations as necessary to conform to the specified concrete strength requirements.

The maturity method may be used at no additional cost to the Department, after submitting a plan to the Engineer for approval to estimate the in-place flexural strength and determine compliance with opening-to-traffic requirements. Establish the necessary preliminary flexural strength vs time-temperature factor correlations using the same materials and JMF as the project, and in accordance with Department procedures.

H. **Reduced QC for Small Incidental Quantities.** Reduced levels of on-site QC testing for concrete may be considered for small incidental quantities. Unless approved by the Engineer, multiple small incidental quantities, including ones that are consecutively placed throughout the project on the same day, are not eligible for reduced QC consideration if the total plan quantity of concrete for the item exceeds 100 cubic yards in volume.

Include details for reduced QC testing and oversight in the approved QC plan in accordance with following:

1. The small incidental quantity of concrete will be limited to a single day's concrete placement of a maximum 20 cubic yards;
2. The small incidental quantity of concrete is not an integral part of a structural load bearing element;
3. The Engineer has received written certification from the Contractor that the concrete supplier has a current QC plan in place and available for review upon request by the Engineer;
4. The concrete supplier employs a MCA certified Michigan Concrete Technician Level II available at the plant or on call during concrete placement to validate and authorize modifications to the concrete JMF;
5. Prior to the first concreting operation, concrete representing the JMF for the small incidental quantity has been sampled and tested by a MCA certified Michigan Concrete Technician Level I or Level II to verify that, historically, the JMF produced a concrete mixture meeting the minimum requirements for density (unit weight), slump, air content, and strength. Annual verification may be acceptable provided there are no changes to the material types or sources, including the cementitious materials and admixtures;
6. The Engineer verified that the temperature, slump, and air content conform to specification requirements at the start of the day's concreting operation associated with the small incidental quantity; and
7. The Engineer is notified and provided a minimum of 24 hours prior to concrete placement.

1002.04. Measurment and Payment. All costs associated with this work are included in the unit prices for the relevant concrete items. The Department will not pay separately for providing and maintaining an effective quality control program.

Section 1003. Quality Assurance (Acceptance) for Concrete

1003.01. Description. Unless otherwise specified, all concrete provided and placed on the project is covered by the Department's concrete quality assurance (QA) program. The Engineer will sample and test concrete for acceptance as part of its quality assurance procedures.

1003.02. Materials. None specified.

1003.03. General Requirements.

A. **Department QA Plan Considerations.** The Engineer will be responsible for administering the quality-based acceptance and will institute any actions necessary toward its successful implementation. The Engineer will not accept concrete at a reduced price as an alternate to the Contractor making adjustments to bring work into conformance.

The nominal QA strength test specimen size must be noted in the QA plan.

The Engineer will develop and follow a QA plan. The Engineer will provide the QA plan to the QC plan Administrator a minimum of 5 working days prior to the pre-production meeting. The QA plan will be reviewed at the pre-production meeting and any proposed changes will be documented.

B. **Personnel Requirements.** Sampling for concrete will be performed by a MCA certified Michigan Concrete Technician Level I or Level II. Aggregate sampling for concrete will be performed by a MCAT certified Aggregate Technician Level II.

C. **Contractor Provided Mixtures.** Provide mix design and accompanying JMFs using the methods of verification in this subsection. Include sufficient information on constituent materials, admixtures, optimized aggregate gradation analysis when required, trial batch verified physical properties of the fresh concrete, mix proportions per cubic yard and compressive strength test results necessary to allow the Engineer to fully evaluate the expected performance of the concrete mixture. All mix designs shall follow *ACI Standard 211.1*.

1. **Mixture Documentation.** Prepare mix designs for each grade of concrete required on the project. Submit JMF for each mix design and all required documentation to the Engineer for review 10 working days before the anticipated date of placement. The Engineer will notify the Contractor of any objections within 5 working days of receiving the mix documentation.

   Identify each JMF and reference all accompanying documentation to this identification. Reference each JMF to the appropriate method of verification. Mix design and JMF submittals that do not include all required documentation are incomplete and the Engineer will return them without review.

Mix documentation is valid for 2 years provided the material characteristics have not deviated beyond the requirements specified in the contract.

All mix designs and accompanying JMFs must be traceable to a laboratory meeting the requirements of subsection 1002.03.E.

Submit mix design and JMF on the MDOT Form 1976, JMF Concrete Field Communicator including project specific or historical laboratory test data. Include the recorded air content of fresh concrete using the same admixture and cementitious material sources to be used in the production of the concrete for the project. A JMF will only be approved if all of the minimum mix design requirements specified in the contract have been met.

2. **Job Mix Formula (JMF).** Select proportions for concrete mixtures according to *ACI Standard 211.1*. The volume (oven-dry-rodded) of coarse aggregate per unit volume of concrete must be 65 percent, minimum. For concrete mixtures using optimized aggregate gradation, the above specified volume of coarse aggregate per unit volume of concrete includes the intermediate aggregate. Provide the necessary ASR documentation per Department requirements.

   Four methods of verification of proposed JMF are acceptable.

   a. **Method 1 – Trial Batches.** Trial batch verification of JMF requires using the same materials and proportions in the trial batches as proposed for the project mix designs. Prepare at least one trial batch for each mix design in sufficient time before starting concrete placement to allow for review according to subsection 1003.03.C.1.

      Provide the results of temperature, slump, density (unit weight), air content of fresh concrete, 28-day compressive strength, and age of concrete at the time of strength testing, for a minimum of three independent samples. All samples may be taken from a single trial batch for a mix design provided the trial batch is at least four cubic yards in volume.

      For JMF trial batch verification purposes only, 7-day compressive strength test results which report at least 70 percent of the specified 28-day lower specification limit (LSL) will be sufficient documentation in lieu of 28-day compressive strengths. The average of at least two strength test specimens represent one compressive strength sample test result for each independent sample.

   b. **Method 2 – Same Mixture.** Verification of JMF is based on the concrete producer's experience with the same mix design, JMF, and the same materials.

      Provide the results of temperature, slump, density (unit weight), air content of fresh concrete, 28-day compressive strength, and age of concrete at the time of strength testing, for a minimum of three independent samples. The average of at least two strength test

specimens represents one compressive strength sample test result for each independent sample.

Do not substitute material types or sources, including admixtures or cementitious materials, nor change mix proportions in the JMF.

c. **Method 3 – Similar Mixture.** Verification of JMF is based on requirements described in Method 2. Substitution of coarse and intermediate aggregate sources is permitted if the new source is of the same geologic type as the original aggregates, and conforms to the specification requirements for the application. Substitution of fine aggregate is permitted only if the new source has been tested for ASR.

Provide the supporting laboratory trial batch documentation and accompanying calculations showing how the mix proportions in the JMF were adjusted, based on the documented differences in relative density (specific gravity), bulk density (unit weight), and absorption of the substituted aggregate sources, to produce a theoretical yield of 100 percent and the required fresh concrete properties.

d. **Method 4 – Annual Verification.** At the Engineer's option, verification may be accepted annually for a concrete producer rather than on a project basis, provided the sources and proportions of the constituent materials, including cementitious materials, source, and types of admixtures, do not change.

If the project is the continuation of work in progress during the previous construction season and written certification is submitted to the Engineer that materials from the same source and with the same mixture properties are to be used, the Engineer may waive the requirement for annual renewal verification of the JMF for the project.

D. **Department Provided Mixtures.** Unless otherwise specified in the contract or approved by the Engineer, the Engineer will provide the concrete JMF for the following types of concrete regardless of the total quantity for the project:

1. Structural concrete patching mixtures, mortar, and grout;
2. Bridge deck overlay concrete mixtures; or
3. Project specific concrete mixtures and grades not defined in Table 1004-1.

Provide the necessary ASR documentation per Department requirements.

E. **Changes in Materials and Properties.** Any change from one approved JMF to another for the same grade of concrete must have prior approval by the Engineer.

Prior to batching, verify that the proposed JMF changes will not affect the properties of the fresh concrete (slump, temperature, air content, density (unit weight), workability), nor result in deleterious mortar bar expansion as a result of ASR per Department requirements.

Resubmitting the mix design and its accompanying JMF is not required when adjusting the aggregate mix proportions included in the approved JMF in order to maintain optimization of the aggregate gradation in accordance with the contract.

Record all changes to JMF in the QC records along with the rationale for the change.

F. **QA Laboratory Requirements.** The testing laboratory with responsibility for acceptance testing on this project is the Region testing laboratory, or a qualified facility under the authority of the Engineer.

G. **Initial Curing Facilities.** The Contractor will provide curing facilities equipped to ensure the proper environment for the Department's QA concrete strength test specimens during initial cure. Each initial cure facility must provide ventilation or insulation, as directed by the Engineer, to ensure the ambient temperature surrounding the specimens is maintained according to ASTM C31/C31M. Each initial curing facility must be capable of being locked, using a Department provided padlock. The Contractor will ensure that all initial curing facilities are accounted for at all times and protected against theft and damage. The Contractor will place and secure each initial cure facility throughout the project limits to minimize excessive transport of the test specimens prior to initial cure, as follows:

1. Immediately after finishing molded specimens, the Engineer will move the QA concrete strength test specimens to the closest initial cure facility.
2. Immediately after all QA concrete strength test specimens are placed into the cure facility and the proper initial curing conditions have been established, the Engineer will secure the facility using the Department provided padlock. Access to the QA concrete strength test specimens, thereafter, must be coordinated with the Engineer and will only be permitted in the presence of the Engineer.
3. The Engineer will transport the QA concrete strength test specimens as described in the QA plan, within 48 hours after molding, but not prior to 8 hours after final set of the concrete, from the initial curing facility to the Department's designated testing laboratory for final curing and strength testing. The specimens will be protected with a suitable cushioning material to prevent damage from jarring during transport. The total transportation time must not exceed 4 hours prior to commencement of final curing.

H. **QA Sampling and Testing.** The Engineer will verify the Contractor's daily startup sampling and testing of temperature, slump, and air content of fresh concrete on the first load; conduct QA sampling and testing; monitor Contractor adherence to the QC plan; and inspect field placed materials in a manner to ensure all concrete for the project is represented. The testing correlation requirements of subsection 1002.03.F.3 must be met prior to concrete placement.

Samples for acceptance will be taken at the point of discharge from the haul unit, at approximately the middle one-third of the load. Mix adjustments to the concrete contained within the haul unit

selected for QA sampling and testing (beyond normal QC) will not be permitted prior to QA sampling and testing. QA sampling will be without prior notification.

The Engineer will perform QA sampling and testing for air content loss of fresh concrete that is either slip formed or pumped at least once during each day of production. Sample concrete from a representative haul unit immediately after its discharge but before the slipform paver or pump hopper. Sample and test the concrete representing the same haul unit after the slipform paver or after discharge from the pump without interruption or alteration of the pumping operation.

The Engineer may perform additional testing on concrete that is pumped whenever the pump is relocated or whenever there is a significant change in the boom configuration or operation of the concrete pump. The Engineer may perform additional testing whenever there is significant changes in the paving operation.

The location(s) within the project limits for QA testing of the fresh concrete and placement of curing facilities for initial curing of the 28-day compressive strength QA test cylinders will be determined by the Engineer in conformance with the following criteria:

1. The elapsed time between obtaining the first and the final portion of the composite sample must not exceed 15 minutes;
2. Testing for slump, temperature, and air content of fresh concrete must begin within 5 minutes after obtaining the final portion of the composite sample;
3. Molding of the 28-day compressive strength QA test cylinders must begin within 15 minutes after obtaining the final portion of the composite sample; and
4. Protect the concrete sample from the sun, wind, and other sources of rapid evaporation, and from contamination.

I. **QA Records.** The Engineer will maintain a complete record of all QA tests and inspections. The records will contain signed originals of all QA test results and raw data, random numbers when used, and resulting calculations. The QA test results will be submitted to the Contractor 24 hours after the Engineer receives the QC results.

J. **Small Incidental Quantities.** At the option of the Engineer, daily 28-day compressive strength QA test cylinders for small incidental quantities of concrete may not be required provided QA test cylinders representing the same JMF were sampled and molded at least once during the same week. Follow small incidental quantity requirements per subsection 1002.03.H.

K. **Lot Size and Makeup.** Lot size and makeup will be determined by the Engineer, based on site conditions. A production lot may consist of a single day's production, individual concrete structural elements, or a combination provided they are of the same JMF. A production lot will not include more than one grade of concrete, concrete of the same grade that have different specified slump or air content, or concrete of the same grade that have different mix designs or JMFs. Consecutively placed concrete mixes where the aggregate proportions were adjusted to

maintain an optimized gradation may be included in the same production lot provided they are the same grade and same JMF.

Each production lot will be divided into sublots of approximately equal size, as determined by the Engineer. The minimum number of sublots will be one per production lot, with the maximum number of sublots based on the anticipated total quality of concrete to be placed and site conditions. A minimum of one sublot will be required for each day of production.

L. **Random Numbers.** Random numbers are used to determine sampling locations when required by the contract.

Prior to the pre-production meeting, the Engineer will generate a list of random numbers using a spreadsheet program or a calculator. The random numbers are used to designate when QA samples are taken based on cubic yard quantities.

At the pre-production meeting, each page that lists random numbers will be signed by the QC Administator and the Engineer. Each sheet containing the random numbers will be covered by a separate sheet of paper in order to prevent disclosure of the random numbers.

The original signed list will be placed in the project file and a copy will be provided to the Engineer's field inspector for the project.

When the project is completed, a copy of the list of random numbers will be provided to the Contractor upon request.

M. **QA Stop Production Criteria.** The Engineer will issue MDOT Form 1165 and concrete production must stop when one or more of the following are observed:

1. The QA testing shows that one or more of the suspension limits for quality characteristics defined in Table 1004-1 are in non-compliance;
2. The QC plan is not being followed;
3. Segregation, excessive slumping of unsupported slip formed edges, or other notable changes in the fresh concrete properties is observed that may prevent proper placement, or consolidation and finishing of the finished product;
4. The required curing system is not being applied;
5. If the measured air content loss between the two testing locations for the same concrete is greater than 1.5 percent air by volume of concrete as described in subsection 1002.03.F.5 and 1003.03.H; or
6. If the air content of fresh concrete is less than 5.0 or greater than 9.0 percent after pump or paver, regardless of the recorded QC or QA air content loss through the pump or paver.

The Engineer will issue a Notice to Resume Work from MDOT Form 1165, only after all necessary adjustments are made to restore conformance with all applicable specifications and the appropriate documentation is made in the QC records.

1003.04. Measurement and Payment. All costs associated with this work are included in the unit prices for the relevant concrete items.

Section 1004. Portland Cement Concrete Mixtures

1004.01. Description. Concrete shall consist of a mixture specified by the grade of concrete of portland cement or blended portland cement; fine aggregate; intermediate aggregate, when required or permitted; coarse aggregate; water; and admixture, when required or permitted.

1004.02. Materials. Provide materials in accordance with the following:

Portland Cement 901
Slag Cement 901
Fly Ash 901
Coarse Aggregate 6A, 6AA, 6AAA, 26A, 29A, 17A 902
Intermediate Aggregate 902
Fine Aggregate 2NS, 2SS 902
Concrete Admixtures 903
Water 911

Select aggregates for the required grade of concrete in accordance with Table 1004-1.

Stone sand 2SS is not permitted in concrete exposed to vehicular traffic.

1004.03. General Requirements

A. **Mix Design and Documentation.** Design concrete mixtures meeting the requirements of Table 1004-1. Provide the grade of concrete for the section number reference application specified in Table 1004-1 or as specified in the contract. Concrete grades ending in HP signify high performance concrete.

Variance requests must be submitted in writing and must include the mix design, JMF, and associated trial batch verification test data. Do not use a grade of concrete with a specified 28-day compressive strength different from what is designated for the application.

B. **Cementitious Materials Content.** Type III cement is not permitted.

Use combined weight of total cementitious materials when determining compliance with the water-cementitious ratio and cementitious material requirements.

All high performance concrete requires 25 to 40 percent replacement of portland cement with supplementary cementitious materials (SCM), for all other grades of concrete replacement of portland cement with SCM is permitted. Unless otherwise specified in the contract, do not exceed 40 total percent replacement by weight of portland cement with SCMs. Acceptable SCMs are located in subsections 901.06, 901.07, and 901.08.

C. **Optimized Aggregate.** Optimized aggregate gradation is required for high performance concrete and concrete mixtures that are placed using a pump. Concrete mixtures for tremie and drilled shaft applications do not require optimized aggregate gradation. Prepare the optimized aggregate gradation and perform process control according to the procedure for optimized aggregate gradation included in the contract.

Aggregates for mixture requiring optimized aggregate gradation must meet the physical requirements specified in subsection 902.03.C. The physical requirements for aggregates used in concrete mixtures for all other applications will be according to the contract.

When high performance concrete is specified in the contract, provide Grade 3500HP for mainline pavement, shoulder, miscellaneous pavement (including ramps), concrete pavement overlay applications, and bridge substructure applications; Grade 4500HP for bridge deck applications; and either concrete Grade 3500HP or 4500HP for bridge approach slab applications. The Engineer may approve Grade 3500HP or 4500HP for other applications.

Unless otherwise specified in the contract, concrete mixtures with optimized aggregate gradation may be used instead of standard concrete mixtures, as approved by the Engineer.

D. **Air Content.** Air entrained concrete is required unless otherwise specified.

The percent air in fresh concrete must meet the requirements of Table 1004-1. The Engineer will allow non-air-entrained concrete for use in steel piles not subject to freezing.

Use ASTM C231/C231M or ASTM C173/C173M to determine the air content of normal weight concrete. Use ASTM C173/C173M to determine air content of lightweight concrete and concrete containing highly porous aggregates.

E. **Consistency.** Determine consistency by the slump test, ASTM C143/C143M. Ensure that slump does not exceed the specifications shown on Table 1004-1.

F. **Concrete Admixtures.** Unless otherwise specified in the contract, Concrete admixtures must be selected from the Qualified Products List. The different types of admixtures are located in subsection 903.02.

For night casting, a water-reducing admixture may be used instead of a water-reducing retarding admixture as long as the concrete can be placed and finished in the sequence specified on the plans prior to initial set, the concrete is not subjected to residual vibration, and is not within the areas influenced by dead load deflections as a result of adjacent concrete placement operations. When the maximum air temperature is not forecasted to exceed 60 °F for the day, the Contractor may use a water-reducing admixture or a water-reducing retarding admixture.

Ensure concrete in concrete diaphragms contains a water-reducing admixture, or a water-reducing retarding admixture.

Set accelerating admixtures are prohibited, unless otherwise specified in the contract.

De-foaming (air detraining) admixtures are prohibited.

G. **Concrete Temperature.** Use ASTM C1064/C1064M to determine concrete temperature.

1004.04. Measurement and Payment. The cost of portland cement concrete is included in unit prices for related pay items.

The Engineer's QA test results will be used to determine the pay factor and price adjustments. The Contractor's QC will not be used for pay factor and price adjustments.

Pay factor and price adjustments will be applied according to the contract.

Table 1004-1 Concrete Mixtures										
Concrete Grade		**3000**	**3500**	**3500HP**	**4000**	**4000HP**	**4500**	**4500HP**	**M**	**X**
Compressive Strength (psi)	**7day**	2200	2600	2600	3000	3000	3200	3200	Commercial grade concrete containing 517 lb/cyd. portland cement may be replaced with an SCM.	Unless otherwise specified, Grade X concrete contains 282 lb/cyd of cement.
	28 day	3000	3500	3500	4000	4000	4500	4500		
	70%	2100	2450	2450	2800	2800	3150	3150		
Flexural Strength (psi)	**7 day**	500	550	550	600	600	625	625		
	28 day	600	650	650	700	700	750	750		
	70%	420	455	455	490	490	525	525		
Slump (in)		a, b, d, f	a, b, d, f, h, i, j, k, l	a, b, d, f, h, i, j, k, l	c, e, g	c, e, g	b, d, f	b, d, f		
Cementitious Material Content (lbs/cyd)		489-517	517-611 m	470-564 m	517-611	517-611	517-658	517-658		
Class of Coarse Aggregate		n, r, s								
Maximum w/cm Ratio		0.45								
Air Content Range (percent)		5.5 – 8.5								
Section Reference		402, 403, 602, 803, 804, 806, 808, 810, 813, 814, 819	401, 602, 603, 705, 706, 712, 713, 718, 801, 802, 803, 810, 819	401, 602, 603, 706, 712, 713, 718, 801, 802, 803, 810, 819	705, 922	705, 922	706, 711, 712	706, 711, 712	N/A	N/A

a. 0-3 inch slump for mixtures for pavements.
b. 0-3 inch slump without admixtures or with Type A or D admixture.
c. 3-5 inch slump without admixtures or with Type A or D admixture.
d. 0-6 inch slump after the addition of Type MR admixture.
e. 3-6 inch slump after the addition of Type MR admixture.
f. 0-7 inch slump after the addition of Type F or G admixture.
g. 3-7 inch slump after the addition of Type F or G admixture.
h. 3-7 inch slump for tremie applications without admixture or with Type A or D admixture.
i. 3-7 inch slump for tremie applications after the addition of Type MR admixture.
j. 3-8 inch slump for tremie applications after the addition of Type F or G admixture.
k. 6-8 inch slump for dry placed drilled shafts.
l. 7-9 inch slump for wet placed drilled shafts.
m. For concrete pavement repair mixtures, use 658 lbs/cyd of cement when the weather is forcast to be above 50°F. or 752 lbs/cyd when the weather is forcast to be 50° or below.
n. Use aggregates from only geologically natural sources for pavement, shoulder, miscellaneous pavement (including ramps), concrete pavement overlay, bridge approach slab, structural concrete, drilled shaft, bridge railing, and bridge sidewalk applications.
o. HP stands for High Performance.
p. HP mixtures require optimized gradation meeting subsection 1004.03.C.
q. HP mixtures require 25 to 40 percent replacement of portland cement with a SCM.
r. Unless otherwise required, use Coarse Aggregate 6AA or 17A for exposed structural concrete in bridges, retaining walls, and pump stations.
s. The flexural and compressive strengths are not part of the specifications but are listed for informational purposes only and are the minimum strengths anticipated for the mix proportions specified for the various grades of concrete when cured under standard conditions.

SECTION 1005. Mortar and Grout Mixtures

1005.01. Description. This work consists of producing and furnishing mortars and grouts.

1005.02. Materials. Provide materials in accordance with the following:

Portland Cement Type I, Type IA.....901
Masonry Cement Type N, Type S, Type M..... 901
Hydrated Lime Type S, Type SA 901
Fine Aggregate 2NS, 2MS 902
Air-Entraining Admixture 903
Water 911

A. **Standard Mortars and Grouts.** Proportion cement and fine aggregates, as specified in Table 1005-1 and Table 1005-2, by weight for batches of at least 1 cubic yard, and by weight or volume for smaller batches. Add water to obtain a mortar or grout of the consistency required.

B. **Non-shrinking Mortar and Grout, Type H-1 (Non-metallic).** Provide Type H-1 non-shrinking mortar and grout, selected from the Qualified Products List, for filling post-tensioning stress pockets in fascia beams of prestressed box beams, under leveling plates supporting structures, for grouting dowels, and under temporary supports.

C. **Expansive Grout, Type E-1.** Provide Type E-1 expansive grout for filling the void around post-tensioned tendons in precast concrete box beams. Proportion the grout as follows:

1. Type I portland cement, 94 pounds;
2. Water, no greater than 5 gallons; and
3. Expansive admixture, as recommended by the manufacturer.

Do not use sand in the grout mixture. Do not use grout containing aluminum or other components that produce hydrogen, carbon dioxide, or oxygen gas.

Ensure grout attains a 28-day minimum compressive strength of 3,000 psi, in accordance with ASTM C942, except proportion the grout as specified in this subsection.

Do not use expansive admixtures, plasticizing or water-reducing agents that contain chloride ions in excess of 0.50 percent by weight, fluorides, sulfides, nitrates, thixotropic additives, or chemicals that may contribute to stress corrosion in steel.

Provide admixtures in liquid or solid form. Use a gas-evolving material, well dispersed throughout the admixture. Provide grout with an unrestrained expansion from 5 percent to 10 percent, in accordance with ASTM C940/C490M, except proportion the grout as specified in this subsection, and determine expansion at 3 hours.

1005.03. Construction. The contractor may remix mortars and grouts.

Do not retemper mortars and grouts or use grout and mortar after it begins to set.

Do not place mortar and grout on materials that are below 40 °F. Provide protection to maintain a temperature of 45 °F or higher during the curing period.

1005.04. Measurement and Payment. The cost of producing and furnishing mortar and grout is included in the unit prices for other relevant pay items.

Table 1005-1
Proportioning Standard Mortars and Grouts by Dry Weight

Mortar or Grout Type	General Use	Materials				Mix Proportions by Dry Weight (lb/cyd)				
		Portland Cement	Masonry Cement	Hydrated Lime	Fine Aggregate	Portland Cement	Masonry Cement	Hydrated Lime	Fine Aggregate	Net Water
R-1 (Grout)	Bond or Primer Coat	Type I, IA	—	—	2NS	1,175	—	—	964	705
R-2 (Mortar) (a)	Patching Spalls; Filling Space Between Box Beams	—	Type M	—	2MS	—	930	—	2,137	415
		Type I	Type N	—	2MS	468	349	—	1,991	415
		Type I, IA	—	Type S, SA	2MS	828	—	75	2,016	415
		Type I, IA	—	—	2MS,2NS	930	—	—	1,966	415
R-3 (Mortar) (a)	Setting Precast Concrete Barriers; Filler Between Slope Protection Blocks and Riprap	Type I, IA	—	—	2NS	765	—	—	2,266	353

a. Provide an entrained air content of 14 percent ±4 percent for mortars by using masonry cement, Type IA portland cement, Type SA lime, or an air-entraining admixture. Do not combine masonry cement and Type IA portland cement, or Type IA portland cement and Type SA lime, unless tests indicate the air content is within acceptable limits.

Table 1005-2
Proportioning Standard Mortars and Grouts by Bulk Volume Parts

Mortar or Grout Type	General Use	Materials				Mix Proportions by Bulk Volume Parts			
		Portland Cement	Masonry Cement	Hydrated Lime	Fine Aggregate	Portland Cement	Masonry Cement	Hydrated Lime	Fine Aggregate
R-1 (Grout)	Bond or Primer Coat	Type I, IA	—	—	2NS	1	—	—	1
R-2 (Mortar) (a)	Patching Spalls; Filling Space Between Box Beams	—	Type M	—	2MS	—	1	—	2½
		Type I	Type N	—	2MS	(b)	(b)	—	(b)
		Type I, IA	—	Type S, SA	2MS	(b)	—	(b)	(b)
		Type I, IA	—	—	2MS,2NS	1	—	—	2½
R-3 (Mortar) (a)	Setting Precast Concrete Barriers; Filler Between Slope Protection Blocks and Riprap	Type I, IA	—	—	2NS	1	—	—	3½

a. Provide an entrained air content of 14 percent ±4 percent for mortars by using masonry cement, Type IA portland cement, Type SA lime, or an air-entraining admixture. Do not combine masonry cement and Type IA portland cement, or Type IA portland cement and Type SA lime, unless tests indicate the air content is within acceptable limits.
b. Do not proportion by volume if blending cementitious materials (portland cement, masonry cement, or lime).

Section 1006. Patching, Repair, and Overlay Mixtures

1006.01. Description. This work consists of mortar and concrete mixtures for patching, repair, and concrete overlays in accordance with section 1001 and section 1004, except as modified by this section.

1006.02. Materials. Provide the materials in accordance with the following:

Portland cement, Type I, Type IA 901
Silica Fume 901
Coarse Aggregate 6AA, 6A, 26A 902
Fine Aggregate 2NS 902
Polypropylene Fibers 903
Concrete Admixture 903
Water 911

A. **General Requirements.** Provide air-entrained concrete or mortar unless otherwise required by the contract.

Proportion mixtures as specified in Table 1006-1, Table 1006-2, and Table 1006-03.

Do not use slag aggregates.

B. **Mortar and Concrete Patching Mixtures: Types F-L, M, C-L, C-L-HE, C, and C-HE.** Provide mortar and concrete patching mixtures for patching bridge decks or substructure elements.

Select a mixture from Table 1006-1 based on the depth of patched area and the length of curing time available before allowing traffic on patches. Provide either regular strength or high-early strength patching mixtures.

C. **Latex Modified Concrete (LMC) Overlay Mixture.** Provide 100 percent crushed 26A coarse aggregate. Ensure LMC meets the strength requirements of Grade 4500 concrete as specified in Table 1004-1.

D. **Silica Fume Modified Concrete (SFMC) Overlay Mixture.** Provide 100 percent crushed 26A coarse aggregate. Ensure SFMC meets the strength requirements of Grade 4500 concrete as specified in Table 1004-1. Supply the silica fume admixture in dry-densified form. Remove dry-densified silica fume from packaging. Do not incorporate the packaging into the concrete mix.

E. **Grade P-NC Pavement Repair Mixture.** Submit a JMF for Grade P-NC pavement repair mixture to the Engineer for approval per subsection 1003.03.C.2.

1006.03. Construction.

A. **Equipment for LMC.** Provide equipment for producing latex modified concrete by volumetric batching and continuous mixing in accordance with ASTM C685/C685M. Provide certification to the Engineer, or demonstrate by field tests, that equipment is calibrated for yield and proportioning. Obtain the Engineer's approval for equipment before starting production.

Supply hand held vibrating equipment to consolodate the repair concrete.

B. **Mixing Concrete and Mortar for Structural Patches and Overlays.** Proportion and mix latex modified mixtures in self-contained mobile continuous type mixers in accordance with ASTM C685/C685M, except the Engineer will determine requirements for certification.

Mix and transport silica fume modified concrete and mortar patching mixtures as specified in subsection 1001.03. Do not deliver more than 7.0 cubic yards of silica fume modified concrete per load to the bridge site in ready mix trucks.

Ensure silica fume modified mixtures receive at least 100 revolutions at mixing speed after adding dry-densified silica fume. Add additional high-range water reducer (HRWR) to the mixture at the project to adjust the slump to the required range. After adding the HRWR, provide at least 60 revolutions at mixing speed. Do not add water at the project.

Allow a cure time of at least 5 days for regular strength patching mixtures and at least 24 hours for high-early strength patching mixtures. Keep patches with regular strength latex modified concrete continuously damp for the first 24 hours. Remove the curinng material at the end of the 48 hour wet cure period and allow concrete to air cure for an additional 48 hours. Maintain patches with high early strength latex modified concrete continuously damp for at least 24 hours.

C. **Mixing Grade P-NC Pavement Repair Mixture.** Produce Grade P-NC pavement repair mixture according to subsection 1001.03.

1006.04. Measurement and Payment. The cost of mortar and concrete patching, repair, and resurfacing mixtures is included in the unit prices for other relevant pay items.

Table 1006-1
Structures Patching Mixtures

Depth of Patch in.	Aggregate Required (d, i)	Mixture Type (g)	Mixture Proportions per cyd, dry weight					Air Content %
			Cement lb.	Net Water (approx.) lb. (h)	Latex Admixture lb. (gal)	Fine Aggregate lb.	Coarse Aggregate lb.	
<1.5	2NS	F-L	752 (c)	(b)	235 (28.0)	2,450	N/A	6.0 ±2.0
1.5 – 4	2NS & 26A	M	799	358 (a)	N/A	1,260	1,260	7.5 ±1.5
≥1.5	2NS & 26A	C-L	658 (c)	169 (b)	143 (17.0)	1,348 (e)	1,458 (e)	4.5 ±1.5
		C-L-HE	846 (c)	(b)	228 (27.0)	1,308 (e)	1,416 (e)	4.5 ±1.5
>4 (f)	2NS & 6AA	C	705	315 (a)	N/A	1,220	1,530	6.5 ±1.5
		C-HE	846	300 (a)	N/A	1,220	1,590	5.5 ±1.5

a. Control water to provide a stiff, workable mixture with a 1 in to 2 in slump. During hot and windy weather, the Contractor may increase the slump to 3 in to 4 in, as determined by the Engineer.
b. Add water, in addition to water in the latex admixture, to control slump to within 3 in to 5 in. Measure slump from 4 min to 5 min after discharge from the mixer. During this waiting period, deposit concrete on the deck and do not disturb. If placing mixtures on sections within super-elevated curves, the Contractor may need to use the lower allowable range of the slump requirement, as determined by the Engineer. Do not exceed water-cement ratio, by weight, of 0.30 including water contained in the latex emulsion.
c. Use only Type I portland cement in these mixtures.
d. Ensure the coarse aggregate's absorption does not exceed 2.5%, in accordance with ASTM C127.
e. The aggregate proportions are approximate; due to gradation changes, the Engineer may adjust. The Contractor may increase the fine aggregate quantity by no greater than 5% by weight of total aggregate if reducing coarse aggregate by an equivalent volume.
f. Substructure repairs.
g. F, M, and C indicate fine, medium, and coarse: L indicates latex modified; HE indicates high-early strength. Type F mixtures are mortars.
h. The specified quantity of water is approximate. Use the least amount of water to provide the consistency required for the specific mixture.
i. Aggregate weights specified in the table are based on a dry bulk specific gravity of 2.65 for gravel and stone. Adjust the weights if the specific gravity of the materials used varies by more than 0.02 from the specified values.

Table 1006-2
Overlay Mixtures

Mixture Type	Aggregate	Slump in	Air Content %	Admixture Required	Mixture Proportions lb/yd³, dry weight					
					Cement (a)	Dry Densified Silica Fume (i)	Net Mix Water	Fine Agg	Coarse Agg	Latex Admixture
SFMC	2NS & 26A (b)	4 – 6	6.5±1.5	(c, d, e)	618	40	273 (f)	1,273	1,601	—
LMC	2NS & 26A (b)	(g)	4.5±1.5	—	658	—	(g)	1,490 (h)	1,300 (h)	206

a. Use only Type I portland cement.
b. Provide coarse aggregate, 95% minimum crushed materials in accordance with MTM 117, with an absorption no greater than 2.5%, in accordance with ASTM C127.
c. Water-reducing high-range admixture or water-reducing high-range and retarding admixture.
d. Virgin polypropylene collated fibers at 2 lb/yd³.
e. Air entraining admixture.
f. Provide a net water to cementitious material ratio of 0.41 (cementitious material includes cement and silica fume). Add water. In addition to water in the latex admixture, to control slump to within 3 in to 5 in. Measure slump from 4 min to 5 min after discharge from the mixer. During this waiting period, deposit concrete on the deck and do not disturb. If placing mixtures on sections within superelevated curves, the Contractor may need to use the lower allowable range of the slump requirement, as determined by the Engineer. Do not exceed water-cement ratio, by weight, of 0.30 including water contained in the latex emulsion.
g. Aggregate proportions are approximate; due to gradation changes, the Contractor may increase proportions by no greater than 5% by weight of total aggregate if reducing coarse aggregate by an equivalent volume.
h. For SFMC mixtures, the Contractor may use a blended silica fume portland cement. However, if the silica fume content of the blended material is greater than 8% of the total cementitious material, submit to the Engineer, modified mix proportions with Type I portland cement added to the blended material to achieve the equivalent individual cementitious material mixture proportions.
i. Aggregate weights specified in the table are based on a dry bulk specific gravity of 2.65 for gravel and stone. Adjust the weights if the specific gravity of the materials used varies by more than 0.02 from the specified values.

Table 1006-3
Pavement Repair Mixture

Concrete Grade	Maximum Cementitious Content (lbs/cyd)	Air Content (percent)	Coarse Aggregate	Slump (in)	Minimum Flexural Strength (psi)	28-day Compressive Strength (psi)	Section References
P-NC	658(a, b)	5.5 - 8.5	6AA (e)	0 - 6	300 (c)	3500 (d)	603, 801

a. The Engineer may permit a maximum cementitious content of 752 lbs/cyd when the weather is forecast to be below 50°F, at no additional cost to the Engineer.
b. Type III cement is not permitted.
c. Use flexural strength for opening to traffic.
d. The Engineer will not require 28-day compressive strength test cylinders for concrete pavement repair.
e. The Contractor may use an optimized aggregate gradation.