Industry Safety and Constructability Review During Design
I-69 from I-96 to Airport Road
JN 125869, 129982 and 204666

Executive Summary:

The goal of the Pilot Project is to test the waters on Industry review of maintaining traffic and staging plans early in the development process. The WZSTF sub-team (Action Team #3) has identified this review as an opportunity to obtain industry perspective on the safety and constructability of a proposed project.

To provide an open and equal opportunity for all potential bidders to review, the pilot will be placed on the Innovative Contracting Web Site (Link: https://www.michigan.gov/mdot/0,1607,7-151-9625_21539_53226---,00.html). MDOT will also post a contractor announcement on the Bid Letting webpage as well as an announcement on MITA's website. This will be reviewed by MDOT based on feedback from the industry. MDOT will provide a compilation of the number of comments submitted on the pilot for all stakeholder's benefit. This has the potential to improve safety, identify construction challenges and enhance the design during the development process. It is intended for use on projects which have complex staging with high mobility requirements.

Disclaimer:

The following documents are in DRAFT format and are provided for informational purposes only. These documents are subject to further revision and are not to be relied upon for bidding or estimating purposes. Under no circumstances are these documents to be submitted or relied upon as part of a request for additional time or compensation, or in support of any type of claim. MDOT specifically disclaims any liability arising out of the use of these documents for any purpose.

Documents:

- Summary Sheet
- Title Sheet
- Vicinity Sheet
- Staging Typicals
- Detour Routes
- Bridge Summary Sheets
- Stage Construction Plan Sheets
- Profile Sheets

Contact:

All comments must be made by E-mail to the Project Manager by **April 24, 2020**. E-mails must include I-69 Pilot Project in the E-mail Title, Name of Inquiring Person, Company Name and Phone Number. All comments will be posted on the Innovative Contracting webpage. MDOT will not reply to the provided comments.

- Project Manager – Miranda Spare - SpareM@michigan.gov

Industry Safety and Constructability Review During Design
Summary of the I-69 Project
JN 125869, 129982 and 204666

A. Scope of Work

- 5.28 miles of roadway reconstruction (including pavement and subbase) on I-69 from I-96 to Airport Road. This includes reconstruction of the ramps at I-96, Francis Road and Airport Road.

- Includes drainage, guardrail, signing and pavement marking upgrades.

- Bridge rehabilitation work to 13 bridges including epoxy overlays, deck patching, joint replacement, substructure repairs, scour countermeasures, structural steel repairs and painting, pin and hanger replacement, barrier patching and approach work.

- The project design files follow the Project PDF format. Project PDF doesn't include individual sheets for the plan and profile sheets but instead one PDF document for each.

- There are various pavement cross sections to be used on the project.

  - <u>I-69 Mainline</u>
    9" to 9.5" of HMA
    6" Dense Graded Aggregate
    18" Sand Subbase (13" from Approx. STA 361+00 to 409+00 POE)
    12" Stabilized Subgrade from Approx. STA 297+00 to 409+00 POE

  - <u>Ramps</u>
    6.5" of HMA (8.75" I-69 to I-96 Ramps)
    6" Dense Graded Aggregate
    18" Sand Subbase

- Rough Construction Cost Estimate is $40 million road and $12 million bridge.

- Anticipated Let Date of January 8, 2021.

- Project to be completed in one construction season.

B. Maintaining Traffic (Currently Proposed with 4 Stages)

- Stage 1A – Single lane closures to complete outside shoulder upgrades on WB I-69.

- Stage 1B – Single lane closures to complete median shoulder upgrades and construct temporary crossovers.

DRAFT
Not for Bidding Purposes

- Stage 2 – Maintain two lanes of WB I-69 traffic and one lane of EB I-69 traffic on WB I-69 roadbed by utilizing crossovers to reconstruct EB I-69.

- Stage 3A – Maintain two lanes of WB I-69 traffic and one lane of EB I-69 traffic on EB I-69 roadbed by utilizing crossovers to reconstruct WB I-69.

- Stage 3B – Maintain two lanes of EB I-69 on the EB I-69 roadway and detour WB I-69 to reconstruct WB I-69 at the I-96 interchange.

- Stage 4 – Single lane closures to remove temporary crossovers.

C. Complexities

- The Maintenance of Traffic has been developed based upon replacement of the existing underlying base (determined not suitable for part-width construction). The traffic staging has utilized crossovers as well as detours of mainline I-96 via I-496 as the preferred option.

DRAFT
Not for Bidding Purposes

THE IMPROVEMENTS COVERED BY THESE PLANS SHALL BE DONE IN ACCORDANCE WITH THE MICHIGAN DEPARTMENT OF TRANSPORTATION 2012 STANDARD SPECIFICATIONS FOR CONSTRUCTION.

PHYSICAL ROAD NUMBER (PR#) & MILEPOST (MP) DATA ARE FROM MICHIGAN GEOGRAPHIC FRAMEWORK VERSION # 16.

MICHIGAN DEPARTMENT OF TRANSPORTATION

ROUTE: I-69

WATERTOWN, DEWITT & DELTA TOWNSHIPS

CLINTON & EATON COUNTIES

ROAD	YEAR	TRAFFIC DATA ADT	DHV	COMM	SPEED DATA DESIGN	POSTED	LIMITS
EB I-69	2017	10,150			75	70	I-96 INTERCHANGE
	2037	11,800					
WB I-69	2017	9,850			75	70	I-96 INTERCHANGE
	2037	11,450					
EB & WB I-69	2017	30,450	11%	16.5%	75	70	I-96 TO AIRPORT RD
	2037	35,350	11%	17%			
FRANCIS RD RAMP A	2017	1,725					WB I-69 TO FRANCIS RD
	2037	1,925					
FRANCIS RD RAMP B	2017	1,350					FRANCIS RD TO EB I-69
	2037	1,475					
AIRPORT RD RAMP C	2017	1,500					EB I-69 TO AIRPORT RD
	2037	1,650					
AIRPORT RD RAMP D	2017	1,325					AIRPORT RD TO WB I-69
	2037	1,450					

SECTION	CONTROL SEC	JOB NO.	FEDERAL PROJECT	FEDERAL ITEM
1	19043, 19322, 23064	125869CON		
2	19043, 23152	129982CON		
2	19043	204666CON		

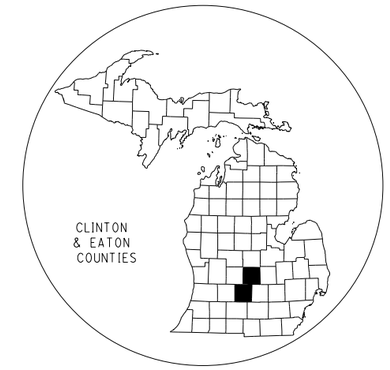

COUNTY KEY

EB I-69 NON-LEGAL (B) ALI STA EQUATION
STA 350+91.48 BK = STA 350+02.09 AH
LINE LENGTHENS 89.39'

WB I-69 NON-LEGAL (B) ALI STA EQUATION
STA 351+60.26 BK = STA 349+64.48 AH
LINE LENGTHENS 195.78'

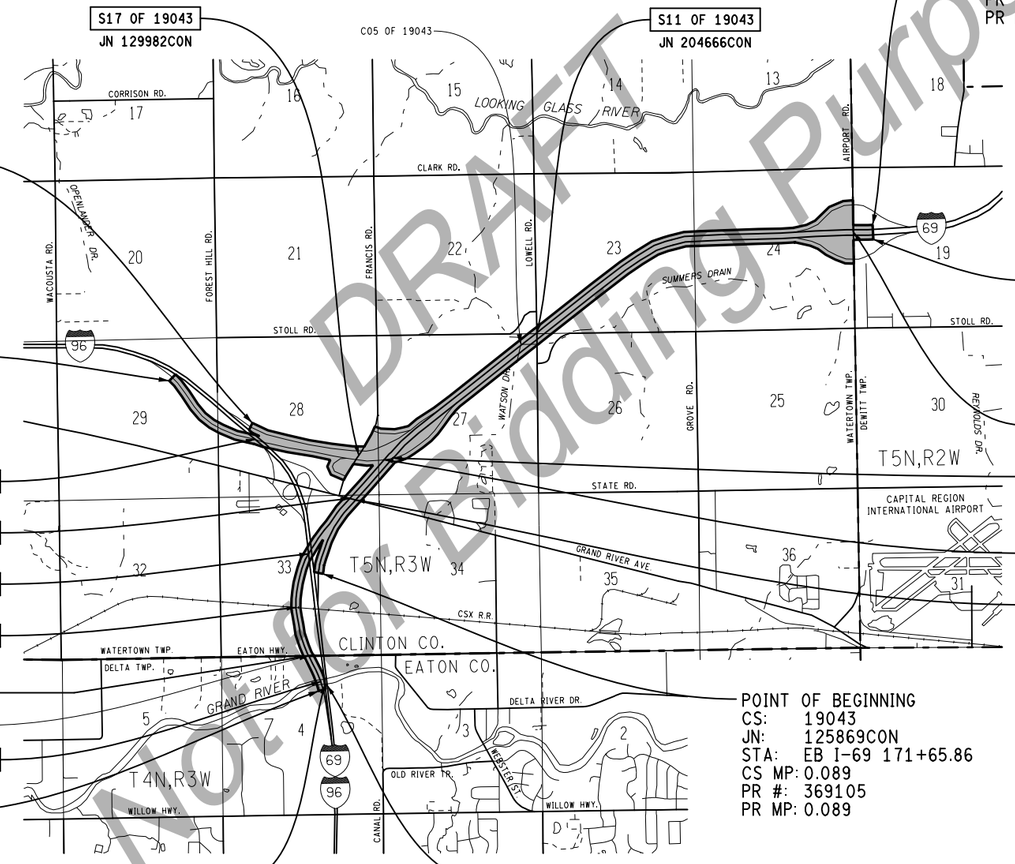

DRAFT
Not for Bidding Purposes

THESE PLANS WERE PREPARED FOR THE MICHIGAN DEPARTMENT OF TRANSPORTATION BY

PAUL CARR, P.E. - PROJECT MANAGER — DATE

HNTB MICHIGAN, INC
3100 WEST RD, SUITE 110
EAST LANSING, MI 48823
(517) 333-3330

APPROVALS

RECOMMENDED FOR APPROVAL BY:

MIRANDA SPARE, P.E. - PROJECT MANAGER — DATE

JASON EARLY, P.E., P.E. - CONSTRUCTION ENGINEER — DATE

MICHIGAN DEPARTMENT OF TRANSPORTATION

KIRK T. STEUDLE, P.E. - DIRECTOR

APPROVED BY:

BRADLEY C. WIEFERICH, P.E. - ENGINEER OF DEVELOPMENT — DATE

MILES: 5.28

CONTRACT FOR:
ROADWAY RECONSTRUCTION ALONG I-69, TURNING ROADWAYS, ASSOCIATED RAMPS AT FRANCIS RD AND AIRPORT RD, GRADING, DRAINAGE, SIGNING, PAVEMENT MARKINGS, & BRIDGE REHABILITATION FOR 13 STRUCTURES.

FINAL ROW PLAN REVISIONS (SUBMITTAL DATE:)

NO.	DATE	AUTH	DESCRIPTION	NO.	DATE	AUTH	DESCRIPTION

HNTB | MDOT Michigan Department of Transportation | NO SCALE

FILE:125869_I69_Title.dgn

DATE: 01/24/20
DESIGN UNIT: SPARE
TSC: LANSING

CS: 19043, 19322, 23064
JN: 125869CON, 129982CON, 204666CON

TITLE SHEET
I-69 RECONSTRUCTION
I-96 TO AIRPORT RD

DRAWING: I-69 TITLE 001
SHEET: SECT 1

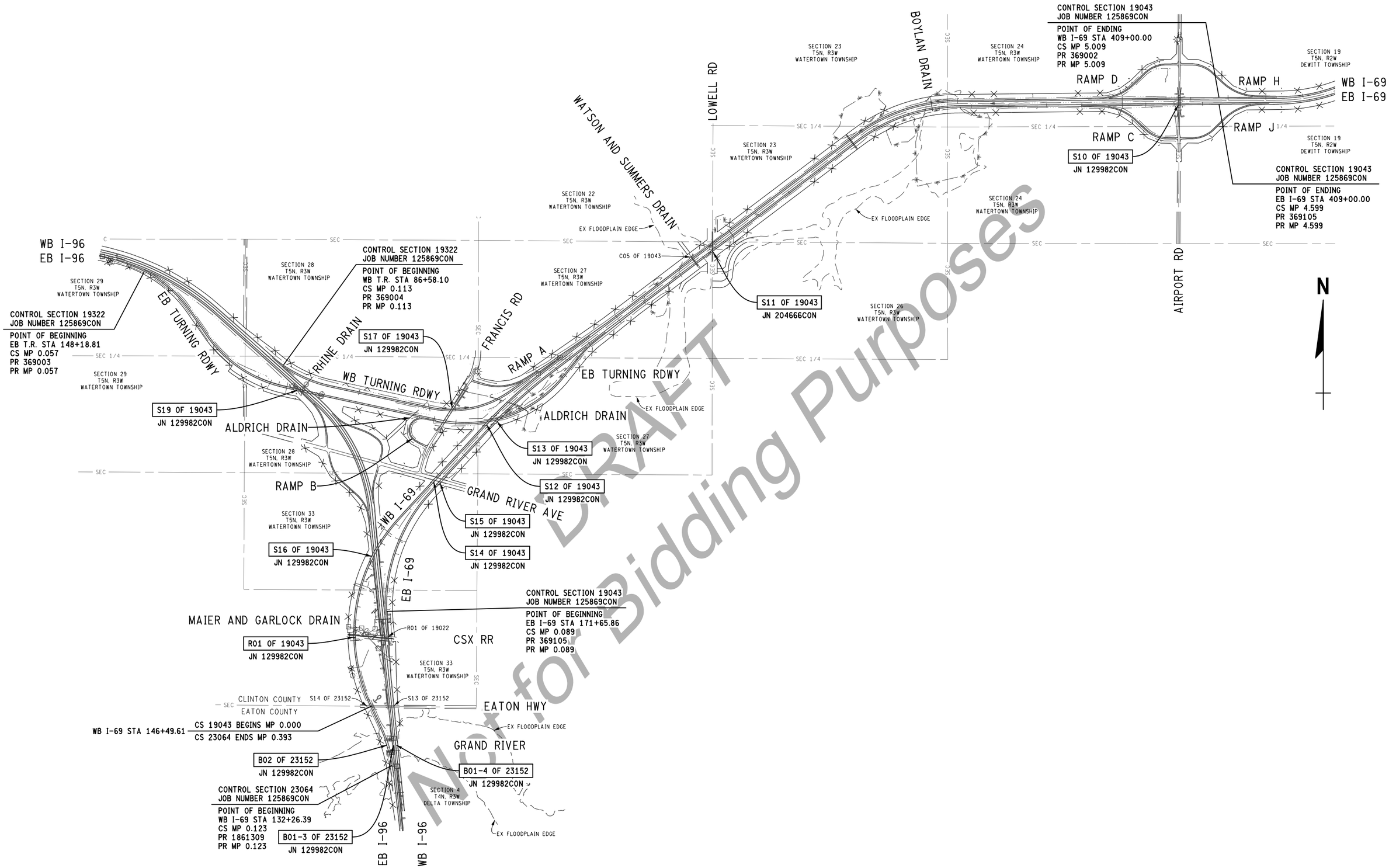

FINAL ROW PLAN REVISIONS (SUBMITTAL DATE:)							
NO.	DATE	AUTH	DESCRIPTION	NO.	DATE	AUTH	DESCRIPTION

HNTB

MDOT Michigan Department of Transportation

0 HORZ. (FT) 2000

FILE:125869_I69_Proj_Vic.dgn

DATE: 01/24/20
DESIGN UNIT: SPARE
TSC: LANSING

CS: 19043, 19322, 23064
JN: 125869CON, 129982CON, 204666CON

PROJECT VICINITY SHEET
I-69 RECONSTRUCTION
I-96 TO AIRPORT RD

DRAWING: I-69 PRJVIC 001
SHEET: SECT 1

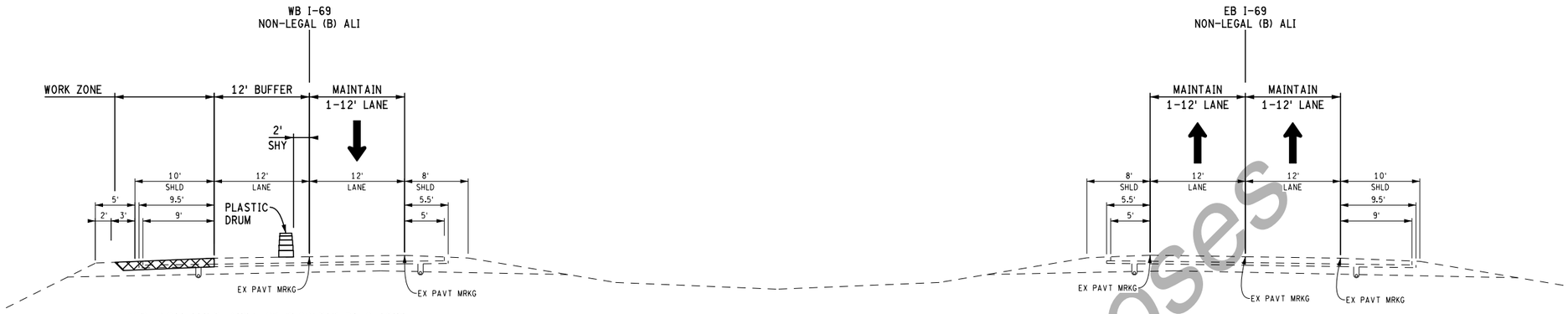

WORK ACTIVITIES: WIDEN OR RECONSTRUCT OUTSIDE SHOULDER, RUMBLE STRIP FILL, CONSTRUCT TEMPORARY GUARDRAIL

SECTION APPLIES TO:
WB I-69 STA 200+00.00 TO STA 416+58.19

STAGE 1A

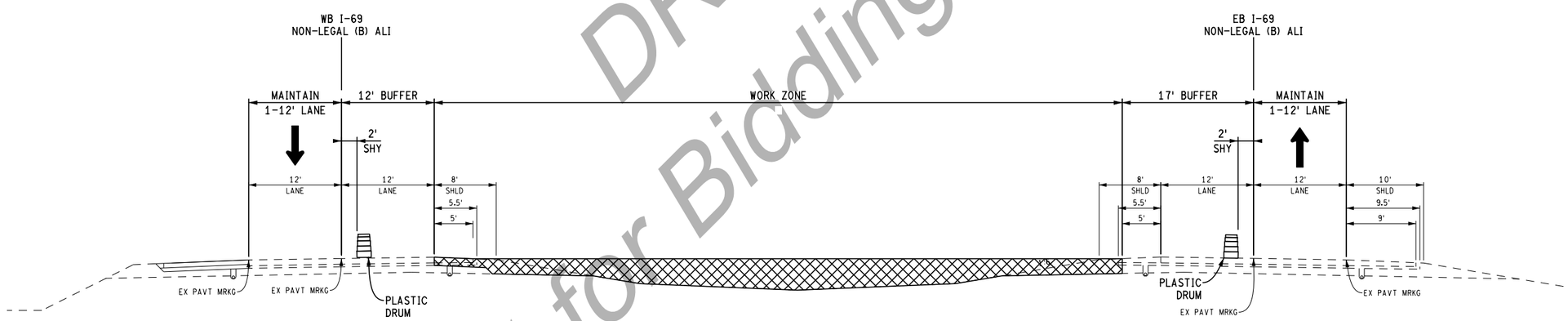

STAGE 1B

SECTION APPLIES TO:
WB I-69 STA 199+02.97 TO STA 423+24.65

WORK ACTIVITIES: WIDEN OR RECONSTRUCT MEDIAN SHOULDERS, RUMBLE STRIP FILL, CONSTRUCT TEMPORARY GUARDRAIL, CONSTRUCT TEMPORARY CROSSOVERS, INSTALL TEMPORARY DRAINAGE

SECTION APPLIES TO:
EB I-69 STA 171+71.40 TO STA 421+22.64

DRAFT
Not for Bidding Purposes

FINAL ROW PLAN REVISIONS (SUBMITTAL DATE:)							
NO.	DATE	AUTH	DESCRIPTION	NO.	DATE	AUTH	DESCRIPTION

RS Engineering, LLC

MDOT Michigan Department of Transportation

0 HORZ. (FT) 16

FILE: 125869_MOT_Typ_Base

DATE: 1/24/20
DESIGN UNIT: SPARE
TSC: LANSING

CS: 19043, 19322, 23064
JN: 125869A

MAINTAINING TRAFFIC
I-69 TO AIRPORT RD
STAGE 1A & 1B TYPICAL CROSS SECTION

DRAWING: I-69 MTTYP 001
SHEET
SECT

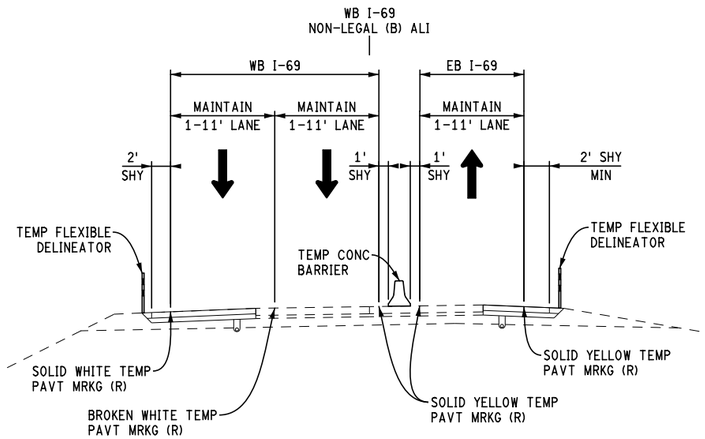

SECTION APPLIES TO:
WB I-69 STA 199+02.99 TO STA 423+24.65

STAGE 2

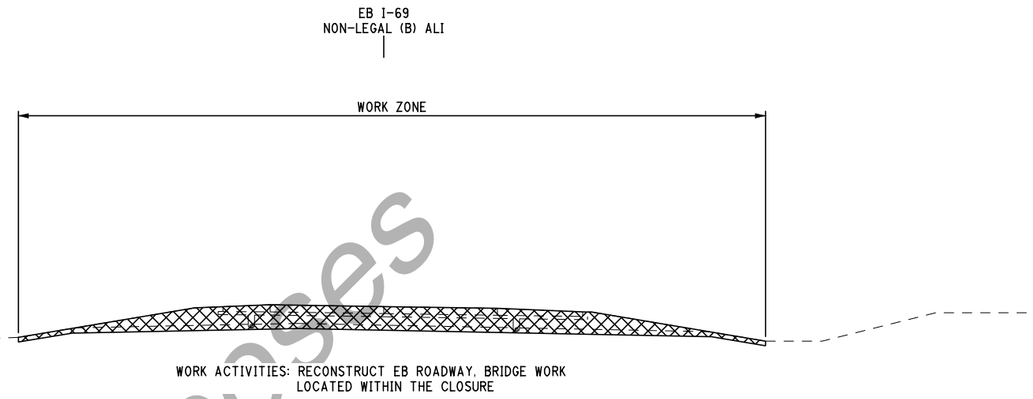

SECTION APPLIES TO:
EB T.R. STA 148+18.76 TO STA 266+31.42
EB I-69 STA 171+71.40 TO STA 421+22.64

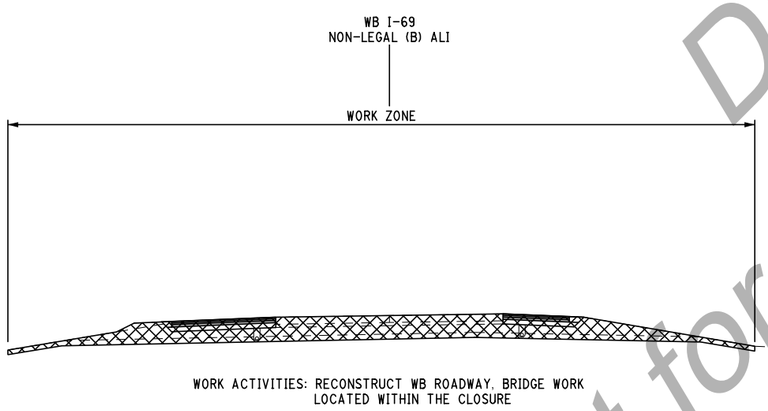

SECTION APPLIES TO:
WB T.R. STA 86+58.10 TO STA 156+03.03
WB I-69 STA 240+49.40 TO STA 423+24.65

STAGE 3A

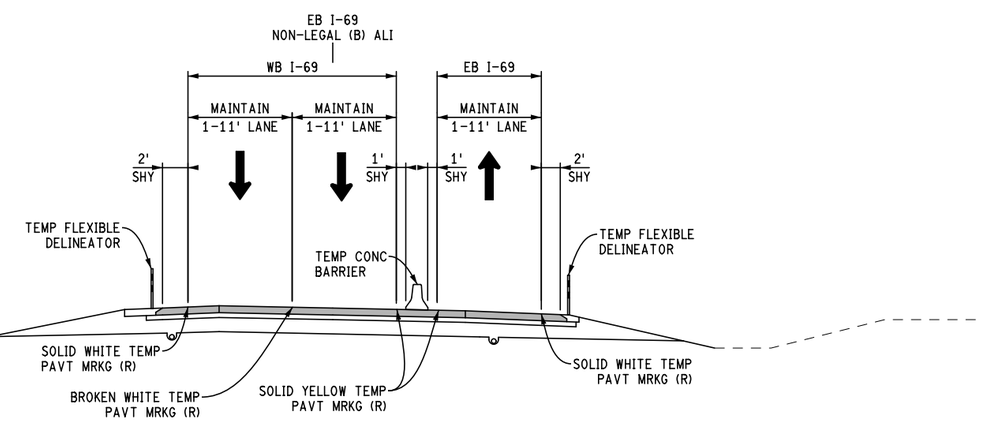

SECTION APPLIES TO:
EB I-69 STA 171+71.40 TO STA 421+22.64

DRAFT
Not for Bidding Purposes

FINAL ROW PLAN REVISIONS (SUBMITTAL DATE:)							
NO.	DATE	AUTH	DESCRIPTION	NO.	DATE	AUTH	DESCRIPTION

RS Engineering, LLC

MDOT Michigan Department of Transportation

0 HORZ. (FT) 16

FILE: 125869_MOT_Typ_Base

DATE: 1/24/20
DESIGN UNIT: SPARE
TSC: LANSING

CS: 19043, 19322, 23064
JN: 125869A

MAINTAINING TRAFFIC
I-69 TO AIRPORT RD
STAGE 2 & 3A TYPICAL CROSS SECTION

DRAWING: I-69 MTTYP 002
SHEET
SECT

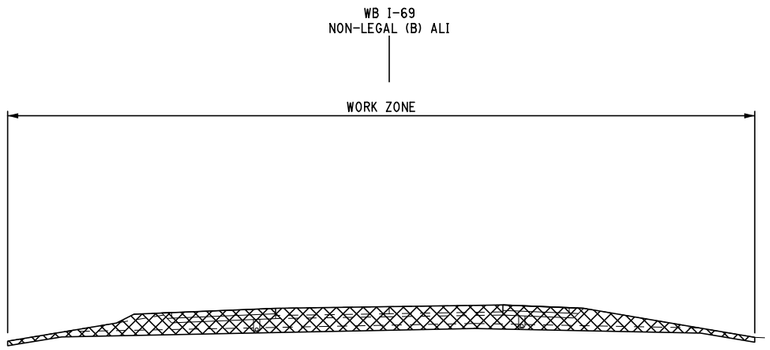

WORK ACTIVITIES: RECONSTRUCT WB ROADWAY. BRIDGE WORK
LOCATED WITHIN THE CLOSURE:
WB I-69 TRAFFIC IS DETOURED

SECTION APPLIES TO:
WB I-69 STA 132+26.30 TO STA 256+34.89

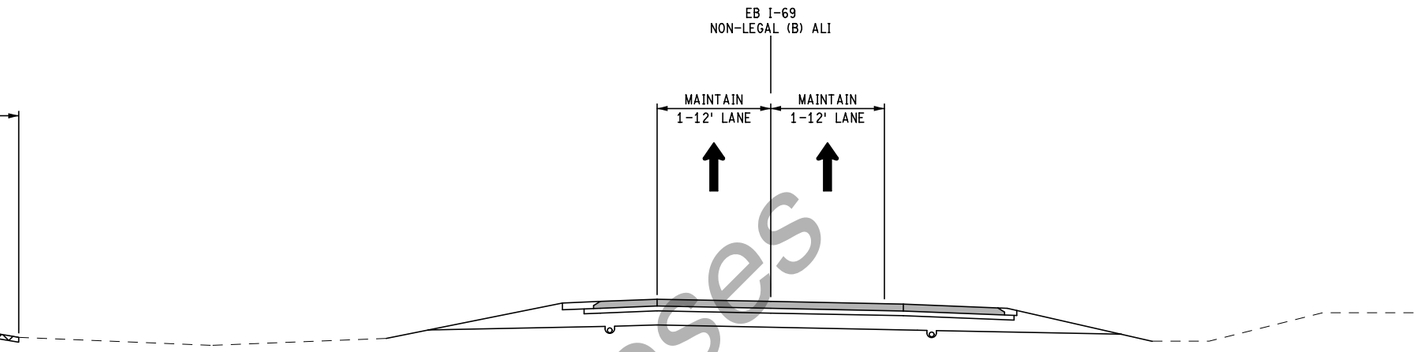

STAGE 3B

SECTION APPLIES TO:
EB I-69 STA 171+71.40 TO STA 421+22.64

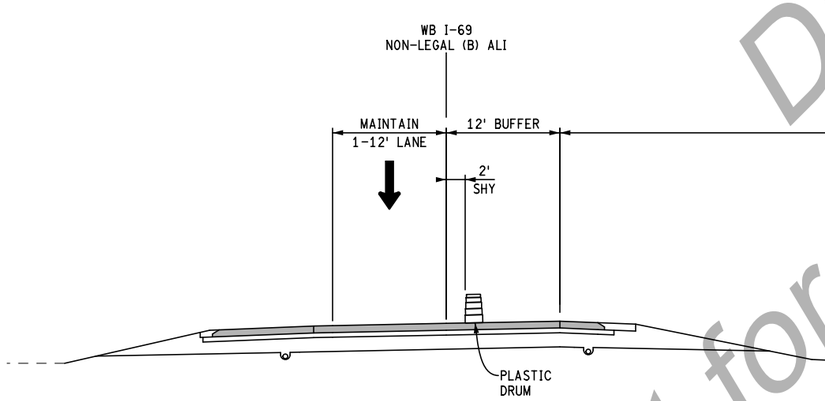

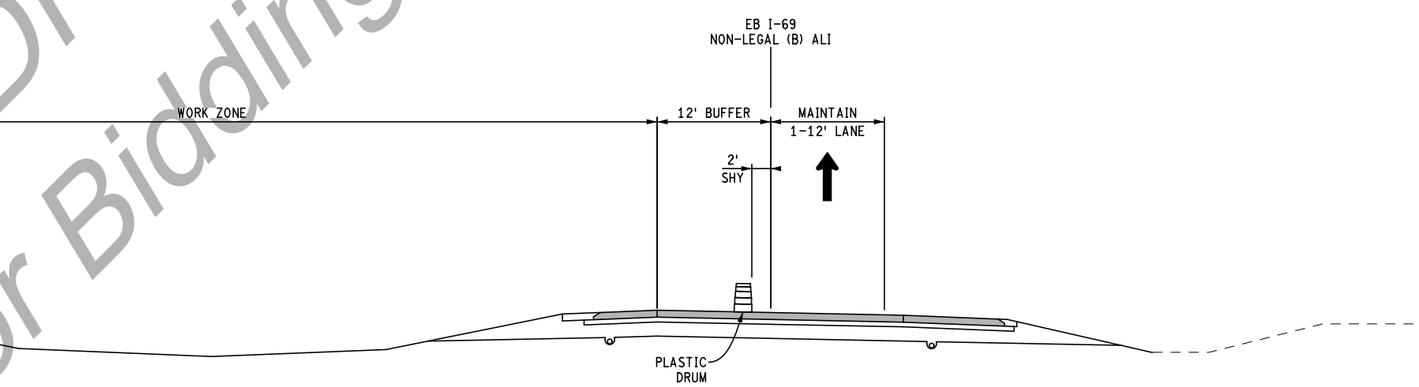

WORK ACTIVITIES: REMOVAL OF TEMPORARY CROSSOVERS,
MEDIAN SHOULDER RECONSTRUCTION,
TURF ESTABLISHMENT

STAGE 4

SECTION APPLIES TO:
WB I-69 STA 199+02.97 TO STA 423+24.65

SECTION APPLIES TO:
EB I-69 STA 171+71.40 TO STA 421+22.64

DRAFT
Not for Bidding Purposes

FINAL ROW PLAN REVISIONS (SUBMITTAL DATE:)							
NO.	DATE	AUTH	DESCRIPTION	NO.	DATE	AUTH	DESCRIPTION

RS Engineering, LLC

MDOT Michigan Department of Transportation

0 HORZ. (FT) 16

FILE: 125869_MOT_Typ_Base

DATE: 1/24/20
DESIGN UNIT: SPARE
TSC: LANSING

CS: 19043, 19322, 23064
JN: 125869A

MAINTAINING TRAFFIC
I-69 TO AIRPORT RD
STAGE 3B TYPICAL CROSS SECTION

DRAWING: I-69 MTTYP 003
SHEET
SECT

Stage 2: Proposed Detour Route for Airport Rd Ramp C Closure

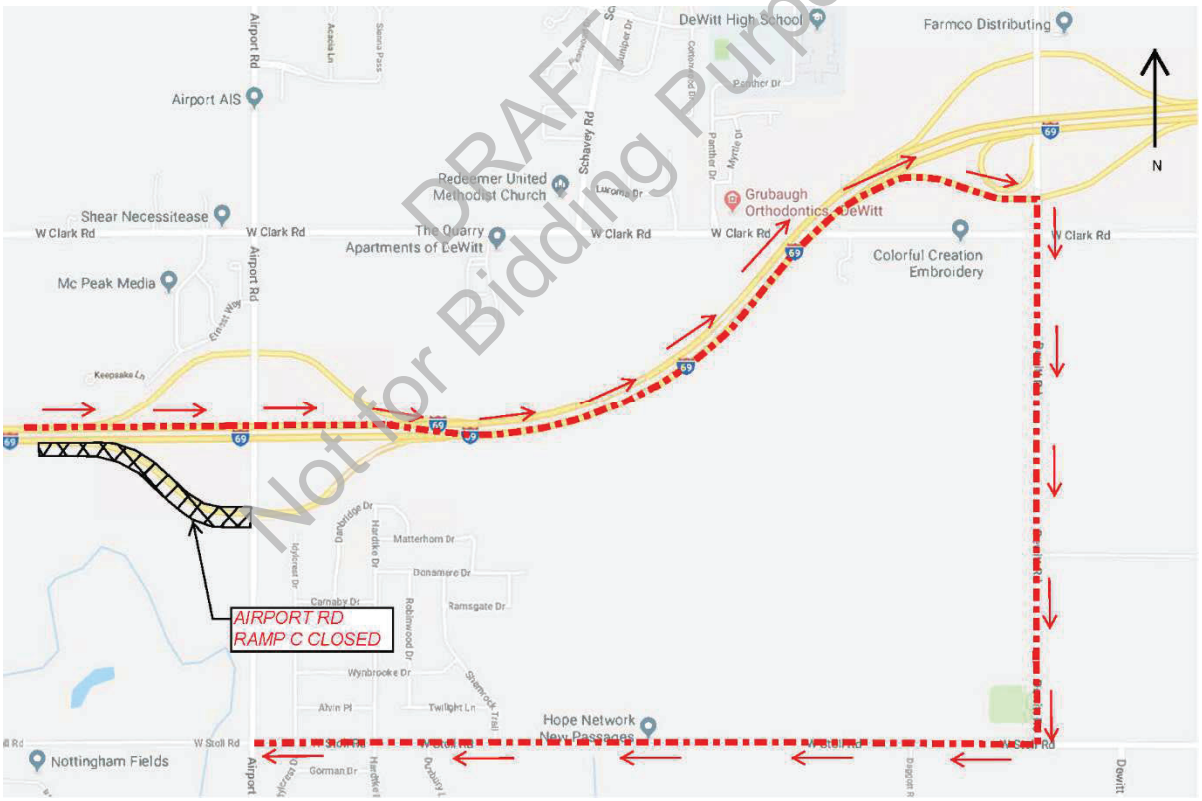

Map Data © 2019 Google

Stage 3a: Proposed Detour Route for Airport Rd Ramp D Closure

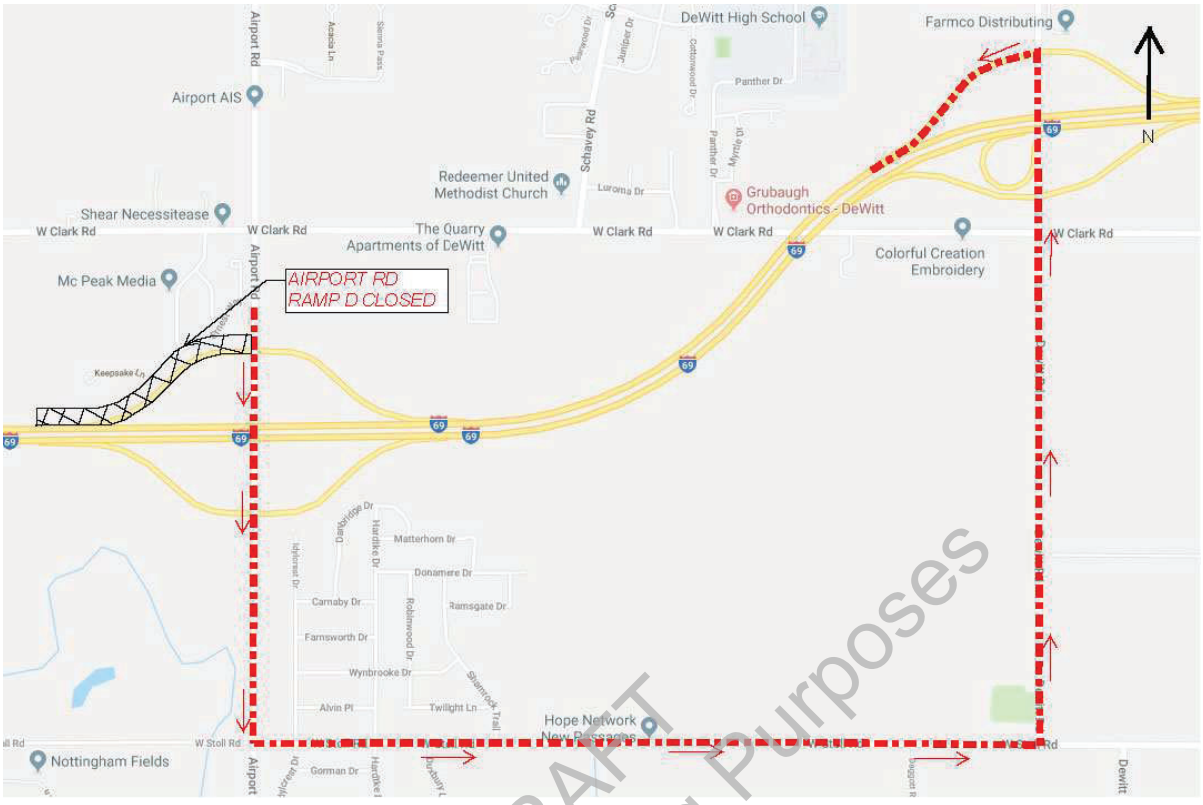

Map Data © 2019 Google

DRAFT Not for Bidding Purposes

Stage 3a: Proposed Detour Route for Francis Rd Ramp A Closure

Map Data © 2019 Google

Stage 2: Proposed Detour Route for Francis Rd Ramp B Closure

Map Data © 2019 Google

DRAFT
Not for Bidding Purposes

Stage 3a: Proposed Detour Route for EB Turning Roadway Closure

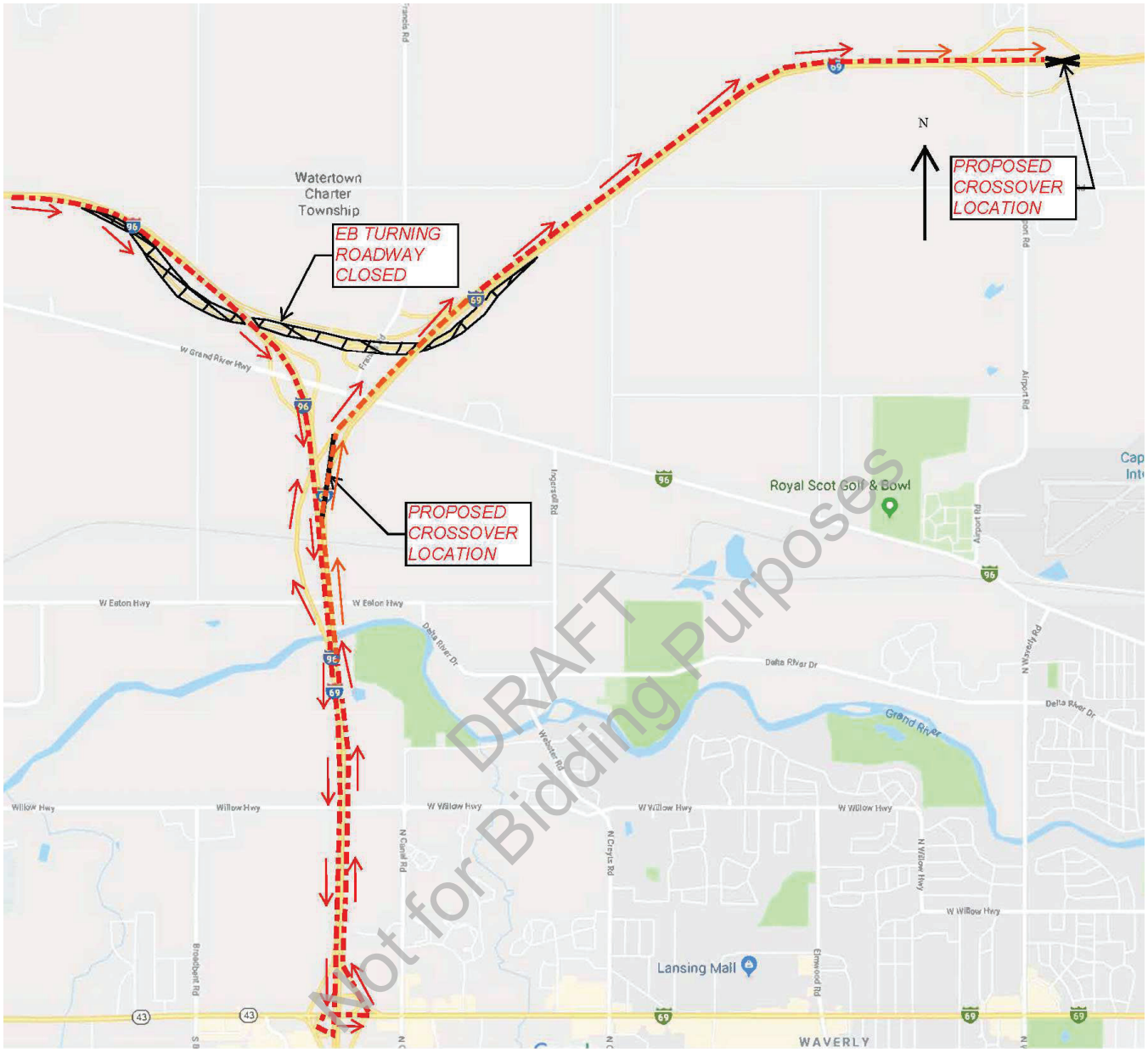

Map Data © 2019 Google

Stage 3a: Proposed Detour Route for WB Turning Roadway Closure

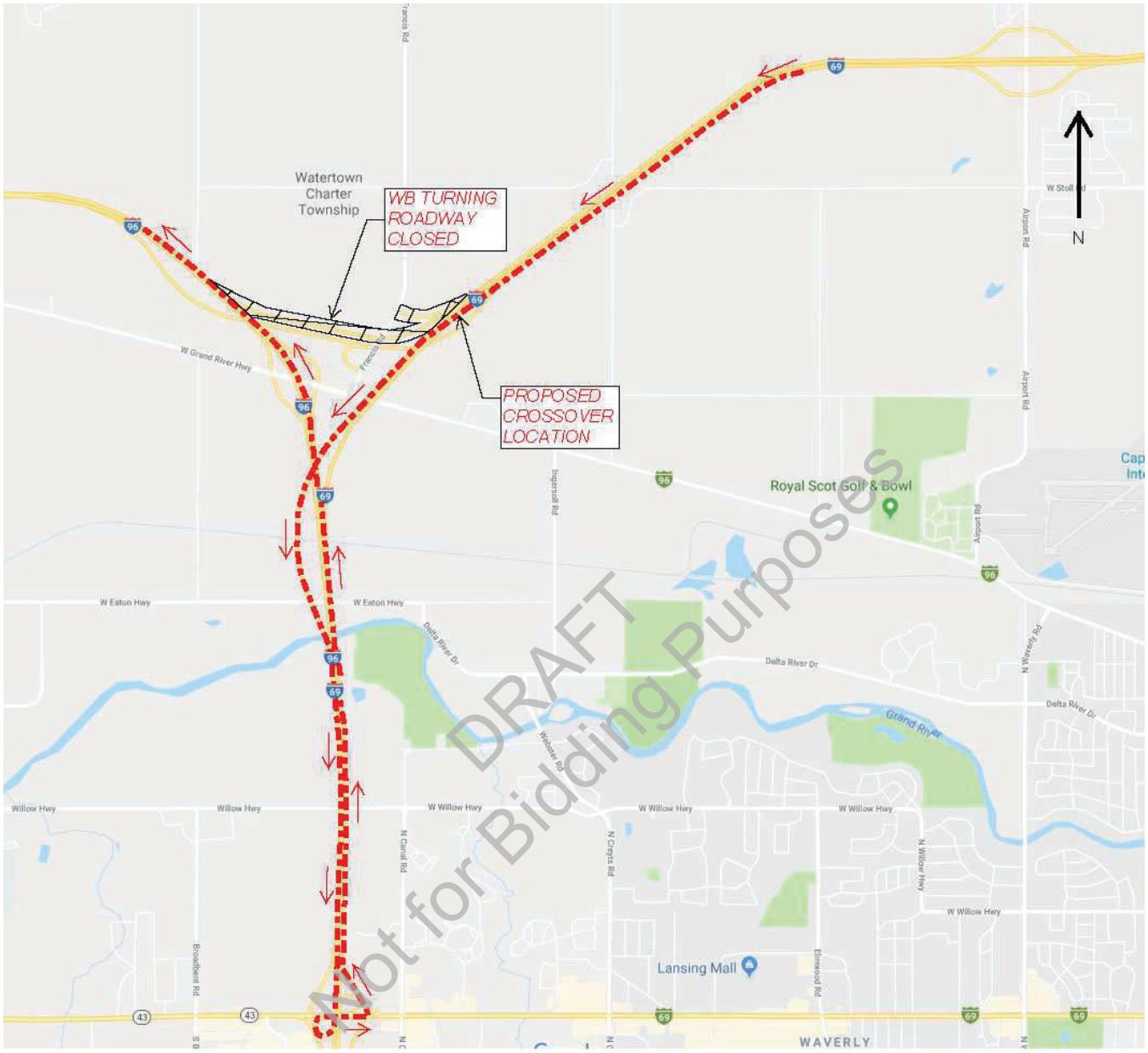

Map Data © 2019 Google

Stage 3b: Proposed Detour Route for WB I-69 to EB I-96

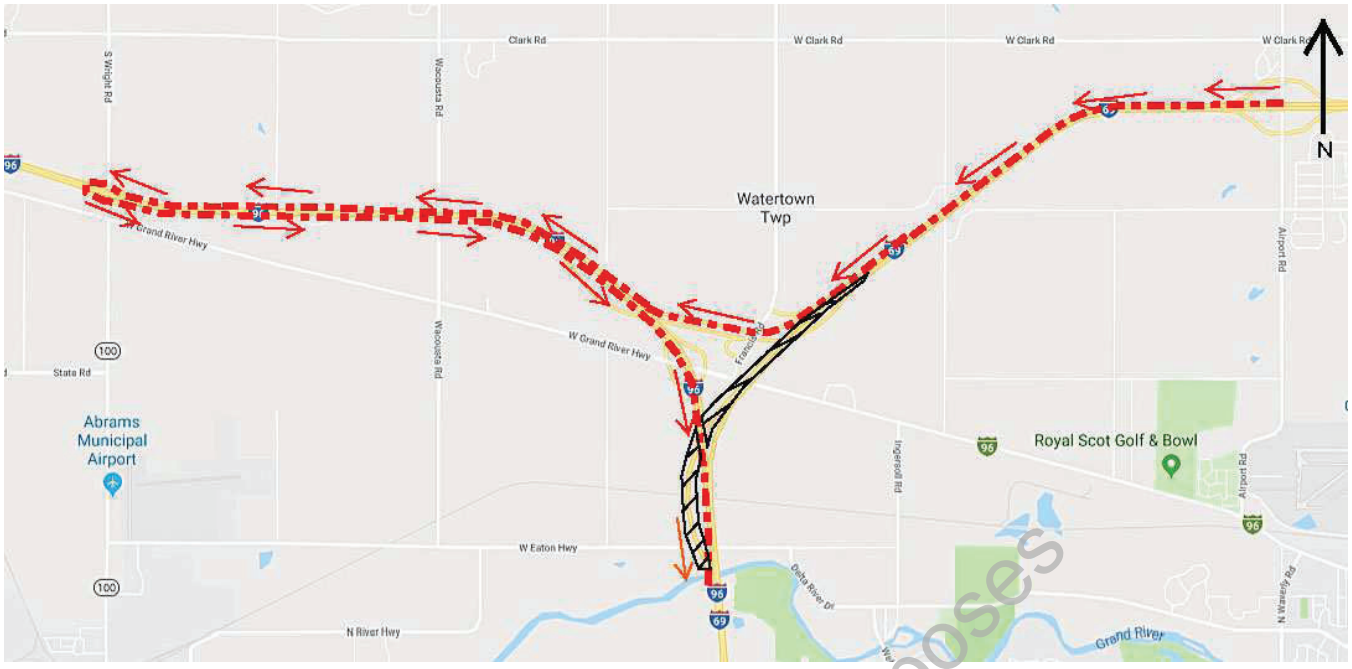

Map Data © 2019 Google

Stage 2: Proposed Detour Route for EB Turning Roadway Closure

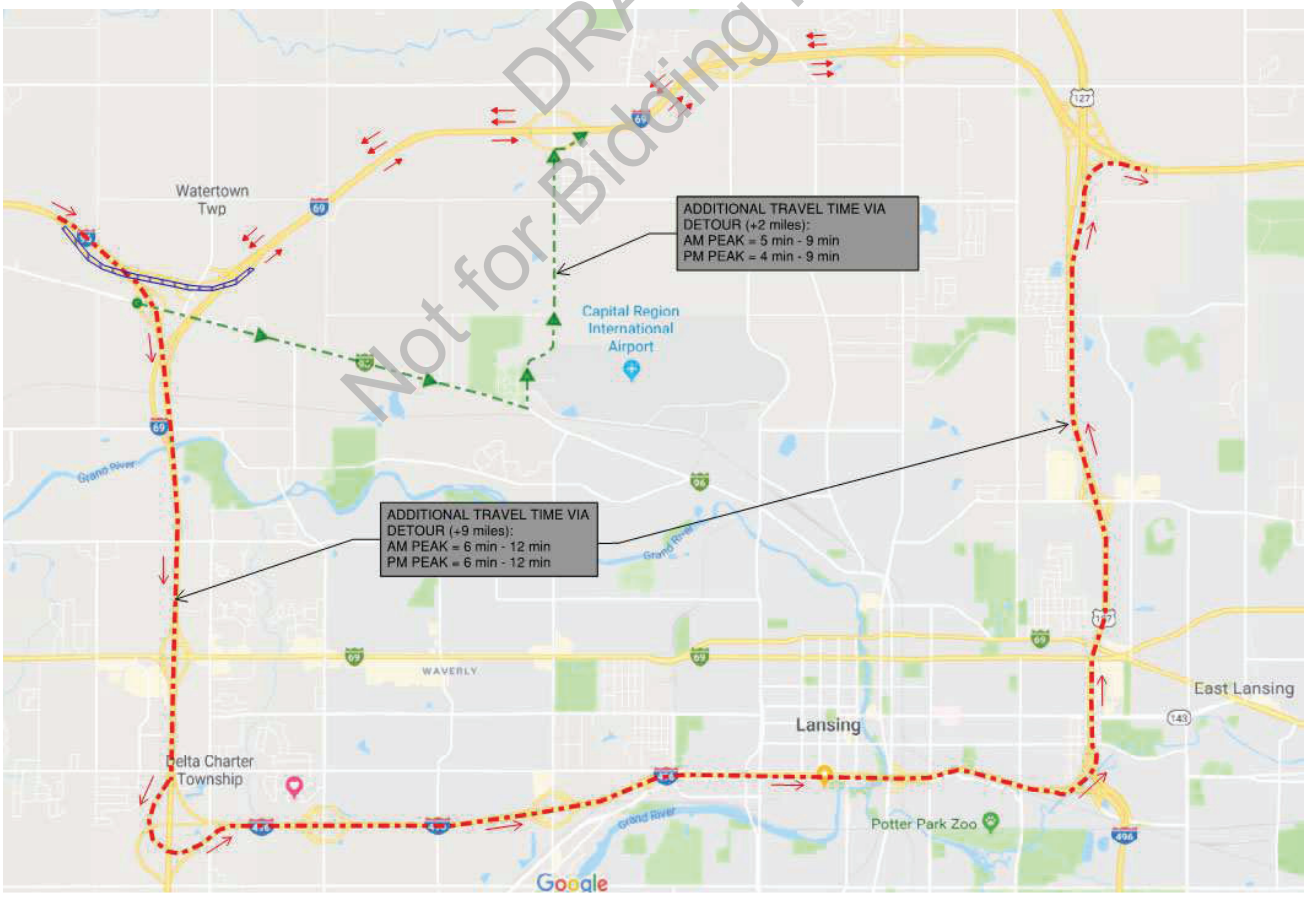

Map Data © 2019 Google

DRAFT
Not for Bidding Purposes