TRANSPORTATION COMMISSION
BARTON W. LA BELLE
RICHARD T. WHITE
ROBERT M. ANDREWS
JACK L. GINGRASS
JOHN C. KENNEDY
BETTY JEAN AWREY
LH 0-0 (6/86)

STATE OF MICHIGAN

JOHN ENGLER, GOVERNOR
DEPARTMENT OF TRANSPORTATION
TRANSPORTATION BUILDING, 425 WEST OTTAWA POST OFFICE BOX 30050, LANSING, MICHIGAN 48909
PHONE: (517) 373-2090 FAX NO.: (517) 373-0167 TDD/TTY - MICHIGAN RELAY CENTER (800) 649-3777
ROBERT A. WELKE, DIRECTOR

March 18, 1997

Mr. James Steele
Division Administrator
Federal Highway Administration
315 W. Allegan Street, Room 211
Lansing, Michigan 48933

Dear Mr. Steele:

This transmits three copies of a summary of the *Third Year Performance of the European Concrete Pavement on Northbound I-75 in Detroit, Michigan.*

This report describes the performance of the I-75 European concrete pavement reconstruction project approximately three years after construction. The design and construction attributes of the project are documented in Research Report R-1333, which was published in September 1994. Comparisons between third year and initial performance testing indicates the European pavement is performing as expected.

Sincerely,

G. D. Taylor
Chief Engineer/Bureau Director
Bureau of Highway Technical Services

BOHTS:M/T:DLS:ch
Enclosures
cc: T. A. Coleman
C. Roberts
C. J. Arnold
J. D. Culp
L. Brown
P. F. Miller
G. Kavalaris
D. L. Smiley

THIRD YEAR PERFORMANCE OF THE EUROPEAN CONCRETE PAVEMENT ON NORTHBOUND I-75 IN DETROIT, MICHIGAN

Introduction

This report describes the performance of the I-75 European concrete pavement reconstruction project approximately three years after construction. The design and construction attributes of the project are documented in Research Report No. R-1335, which was published in September 1994 as part of Research Project No. 92 B-0105. Performance results one year after construction were published in Research Report No. R-1338 in January 1995. Performance after two years was published in Research Report No. R-1343 in June 1996. The experimental features of the pavement design were assimilated from designs used in Germany and Austria. The construction project is identified as federal project IM 75-1(420) and Michigan project IM 82251-30613A.

The approximately one mile long European pavement is located on northbound I-75 between the Warren Avenue exit ramp northerly to Picquette Avenue, which is just north of I-94. Construction began in July 1993 and the pavement was opened to traffic on November 23, 1993. During the 1994 construction season, southbound I-75 traffic was detoured onto northbound I-75, while it was reconstructed. Southbound traffic was restricted to the two inner lanes (median side) on northbound I-75. The entire I-75 reconstruction project was completed and both directions reassumed normal traffic operation on October 5, 1994.

The European pavement was part of a major Michigan project to reconstruct 3.7 km (2.3 miles) of the I-75 (Chrysler) freeway in downtown Detroit between I-375 and the I-94 (Edsel Ford) freeway. I-75 is six to eight lanes wide and carries approximately 111,000 vehicles a day that includes about 11 percent trucks. The remaining portions of northbound I-75 and southbound I-75 are a conventional Michigan concrete pavement design that serves as a control section to the European design. Typical cross-sections of the European and Michigan pavements are shown in Figures 1 and 2, respectively.

Project Objective

The objective of this project is to determine whether innovative features of typical rigid pavement designs used in European countries can be applied cost effectively to conventional design and construction methods used for rigid pavements in the United States. Two concerns that currently prohibited their use in American designs are; (1) their relative high initial costs and (2) their unknown affects on life cycle costs over the pavement's service life. An adoption with Michigan rigid pavement designs depends specifically on an analysis of point 2, which will be examined in the final report after the completion of the five-year evaluation period.

PROJECT EVALUATION

The parameters to determine long term performance of the European pavement were defined in Michigan Work Plan No. 130, dated February 1993. The project agreement with the FHWA specifies a five-year monitoring period with the final report due by December 31, 1998. This report is the third performance evaluation study of the project.

Only limited data were collected during the past year regarding the performance of either the European or Michigan pavements. These data consisted of a visual distress survey made in January 1997 and ride quality measurements made in February 1997. Michigan's friction testing

vehicle was unavailable for any surface testing during the past year. Deflection data and sand patches (surface texture) measurements are typically conducted when freeway lanes are closed for routine maintenance activities, but such a convenient closure did not occur in 1996.

Surface Distress

In January 1997, a visual inspection of the entire European section was made when the surface was damp by slowly driving the outside shoulder. Surface distress features remain minimal as the pavement condition is very similar to the condition found in October 1995, which was described in the second year report. In October 1995, six panels were observed with very tight longitudinal cracks extending from a drainage structure to the next contraction joint. It's assumed they are caused by the fixed position of the structure as the pavement structure moves from expansion/contraction forces. These longitudinal cracks are still very tight with no associated distress.

The Michigan control section on northbound was also visually inspected at the same time as the European pavement. Transverse cracks still remain the only visual distress type. An actual count of the number of cracked pavement panels was made to compare with the approximated 20% cracked panels reported in the second year report. The count found twenty-eight percent of the 12.5 m (41ft) long panels had either one mid-panel or occasionally two transverse cracks at the panel's one-third points. The eight percent difference between the two surveys is an accuracy measurement between the surveys and not because more cracking is occurring. The cracks are typically irregular in direction. Only minor spalling with no faulting was observed. They are usually in only one lane and had not propagated across an adjacent lane. The cracks are equally scattered across all lanes. This initial crack pattern is typical of Michigan's 12.5 m (41ft) long reinforced pavement panels.

Ride Quality

Ride quality performance is measured by two parameters for this study: (1) the Michigan Ride Quality Index (RQI) and (2) the International Roughness Index (IRI) which is the more universally accepted method for measuring road surface roughness.

Michigan's RQI was developed about 25 years ago from a department research study that correlated the pavement's longitudinal profile with a driver's subjective rating of the pavement's ride quality. First, the pavement's longitudinal profile is measured in the lane's right wheel path by the department's Rapid Travel Inertial Profilometer, which was constructed by the department from methodology developed by General Motors in the 1960's. The profile is digitized and divided into three spatial wavelength bands by using third order Butterworth high and low pass filters. The variance of the profile in each band is then calculated from:

$$Var_i = \frac{\Sigma x^2}{N} - \Sigma\left(\frac{x}{N}\right)^2$$

Where x is a profile elevation value in inches and N is the number of x values.

i = 1 for 50-25 feet, i = 2 for 25-5 feet, and i = 3 for 5-2 feet

RQI is then given by the formula:

$$RQI = 3.077 \ln (Var_1 \times 10^8) + 6.154 \ln (Var_2 \times 10^8) + 9.231 \ln (Var_3 \times 10^8) - 141.85$$

The resulting value is an unitless number that provides a rating scale from O (a perfect pavement surface) to 100 (the roughest surface). In the original study the RQI measure was found to have a 90 percent correlation with the subjective opinion of the thirty-two pavement sections used in the study.

A scale for rating RQI values in subjective terms is:

RQI Value	Rating
0 - 30	Excellent
31 - 54	Good
55 - 70	Fair
> 70	Poor

Michigan's current ride quality specification for new concrete pavements require an RQI value of less than 54 to be acceptable. Pavements with an RQI value less than 45 receive a prorated bonus payment.

The respective RQI and IRI values for the European pavement and the Michigan control section are shown in Tables I and II, respectively. The values were derived from the longitudinal profile in the right wheel path of the outside driving lane. Both measurement methods indicate only minor fluctuations in the 1/10 mile increment in the three years since construction took place. These fluctuations are likely caused by mismatching of individual segments from year-to-year, because it's difficult to maintain the same exact starting and ending points of each roadway segment from one year to another in the state network computer file. Also, the complexity of locating the Michigan section is increased because it has two different network reference numbers. To resolve this problem, all ride quality data, except for July 1995, were derived from special runs of each pavement and not taken from the network data files. In summary, average RQI and IRI values indicate the Michigan section has maintained a slightly better ride quality than the European section and that no significant change occurred with either section.

TABLE I - EUROPEAN PAVEMENT RIDE QUALITY

EUROPEAN - (RQI) (1/10 mile segments)*				EUROPEAN - (IRI) (1/10 mile segments)*			
Dec 93	Feb 95	Jul 95	Feb 97	Dec. 93	Feb. 95	Jul. 95	Feb 97
48	54	48	48	106	139	84	105
40	43	44	41	95	74	83	65
47	52	57	50	97	111	98	88
45	50	51	50	105	111	102	91
42	45	46	42	81	101	82	72
36	46	43	41	97	98	68	71
35	44	42	41	88	99	74	72
30	43	40	40	73	85	77	69
38	45	42	42	106	99	71	77
52	48	63	48	93	104	107	86
Avg. 41	Avg. 47	Avg. 48	Avg. 48	Avg. 94	Avg. 102	Avg. 85	Avg. 80

*Segments listed as they are driven

TABLE II - MICHIGAN PAVEMENT RIDE QUALITY

MICHIGAN - (RQI) (1/10 mile segments)*					MICHIGAN - (IRI) (1/10 mile segments)*			
Dec 93	Feb 95	Jul 95	Feb 97		Dec 93	Feb 95	Jul 95	Feb 97
69	44	43	54		146	84	81	90
53	52	42	44		98	99	252	85
43	34	70**	39		66	64	166**	65
42	48	38	39		72	73	66	59
46	49	44	48		71	75	72	78
38	43	43	37		56	67	70	58
40	41	48	37		67	72	82	59
43	45	47	34		65	70	81	53
39	44	40	29		55	62	65	45
30	34	37	32		44	53	62	50
38	42	36	43		57	68	58	80
Avg. 44	Avg. 43	Avg. 44	Avg. 40		Avg. 73	Avg. 72	Avg. 96	Avg. 66

*Segments listed as they are driven

**Segment may not be on Michigan section of I-75 - probably on merging ramp

Exposed Aggregate Surface

Although surface texture is not a specific performance parameter for this project, it deserves special attention because of the unique exposed aggregate surface used on the European pavement. The construction procedure, detailed in the construction summary report (Research Report No. R-1333), is a patented process (International Patent No. 0086188) developed by Robuco, Ltd. of Belgium. Its stated benefits versus typical surface drag and transverse tining used on the Michigan pavement are less tire noise levels and higher skid resistance (FN values). Previous project reports have shown that these benefits have not occurred.

Visual observations of the exposed aggregate surface were also made during the January 1997 distress inspection. As previously reported, the surface appears erratic in texture depth and color. This appearance results from the non-uniform distribution and spacing of the exposed dark blackish gray aggregate particles, which have a nominal diameter of 6-8 mm. The larger particles

(2-3 mm) in Michigan's concrete sand caused the coarse particles to have an erratic surface distribution and spacing. The coarse aggregate particles are staying in place (currently 4th winter cycle), as very few particles were noticeable in joint cavities or lying on the shoulder.

Joint Seals

The longitudinal and transverse joints were sealed with an Ethylene Propylene Diene Terpolymer (EPDM) seal, which is another unique feature of the European pavement. Neither the transverse nor longitudinal EPDM seals show any visible change since the first inspection in October 1994. The *camelback humping* reported in the first year report has not worsened with no seal protrusion above the pavement surface. There is occasional dropping of the EPDM seal in the joint cavity. The appearance of the seal lap joint at the intersection of the transverse and longitudinal joint is fine. During the inspection, water was being held in the joint cavity above the seal indicating minimal adhesion loss. The seal supplier, Phoenix North America, Inc., reports the EPDM seal has an expected 10-12 year service life.

CONCLUSIONS

There is insufficient data to conclude whether any change in condition or unexpected performance trends are occurring with the European pavement in the three years since initial construction. Therefore, it's believed the European pavement section is generally performing as expected, as is the Michigan pavement section. Specific points of interest about the project after three years are summarized as follows:

- No significant surface distress features have developed for either the European or the Michigan pavement sections. Approximately, twenty-eight percent of the pavement panels (all lanes) in the Michigan section have one or two transverse cracks, but this is expected with longer joint spacings with reinforced panels. Six pavement panels in the European section developed (2nd year) very tight longitudinal cracks that protrude from a drainage structure. After one year the longitudinal cracks have remained very tight and are not readily noticeable.

- The appearance of the exposed aggregate surface has not changed in the past year. There is minimal loss of coarse aggregate particles from weather action or snow plowing. An intangible benefit is less windshield spray from traffic than with the tinned surface.

- The EPDM joint seals are performing satisfactorily. In the second year report occasional *camelback humping* and some dropping of the seal material were reported indicating that excessive elongation of the seal took place during installation. The situation has not worsened in the past year. After a recent rain, water was evident in the joint cavity indicating an effective seal was being maintained.

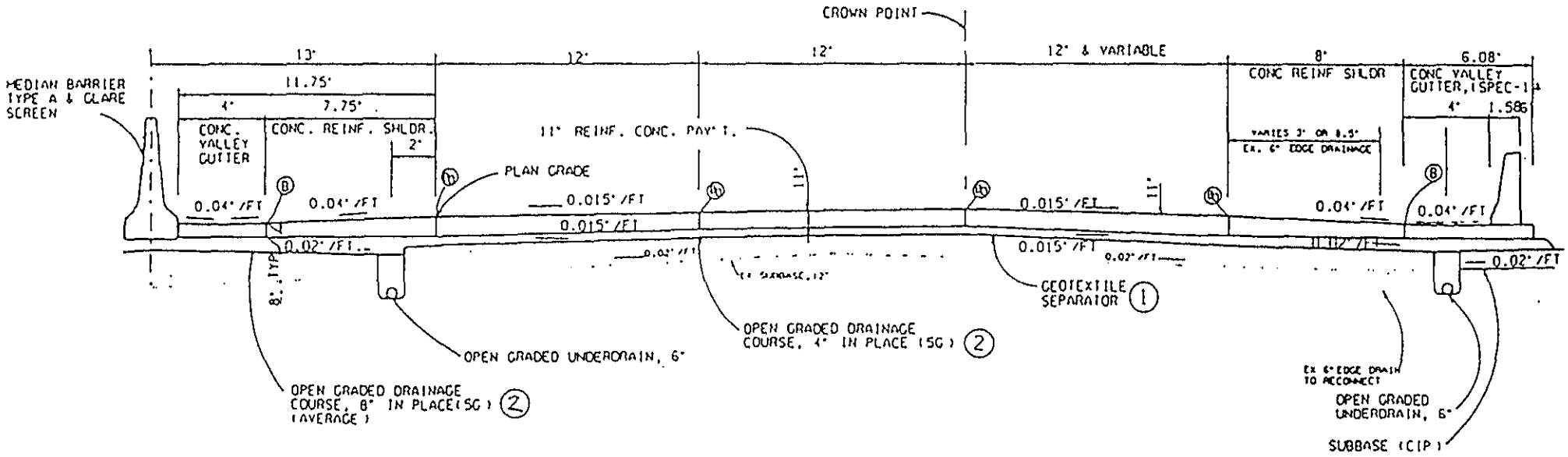

MICHIGAN CONVENTIONAL SECTION
NB I-75

NOTES:

(1) GEOTEXTILE SEPARATOR WAS INADVERTENTLY SHOWN TO BE PLACED ACROSS TRENCH OPENING FOR OPEN-GRADED UNDERDRAIN.

(2) CONTRACTOR HAS OPTION BY SPECIFICATION TO COAT SG AGGREGATE WITH EITHER CEMENT OR ASPHALT.

Figure 2

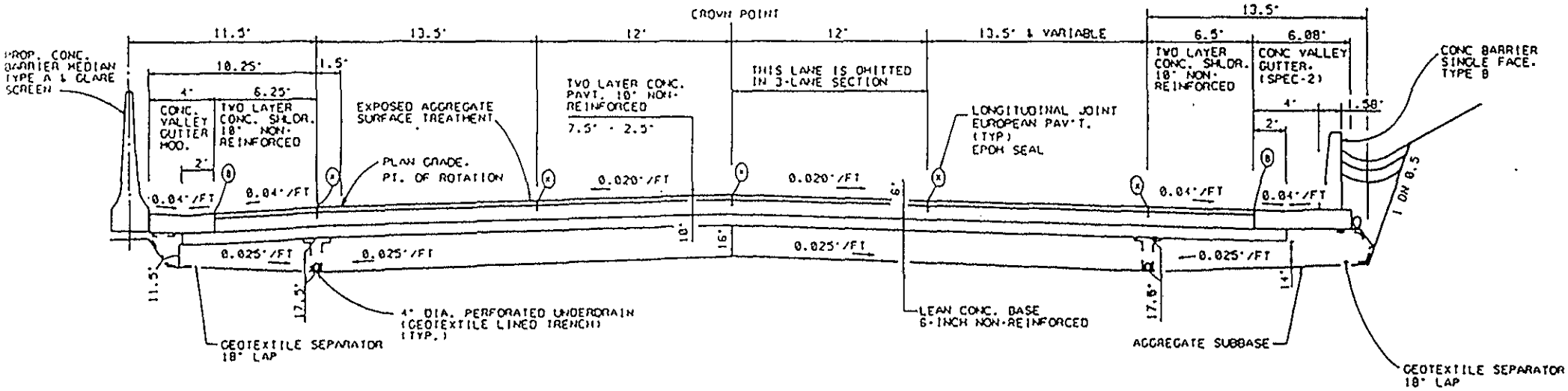

EUROPEAN PAVEMENT SECTION

NBD I-75

Figure 1