MANUAL FOR THE MICHIGAN TEST METHODS (MTM)

Michigan Department of Transportation

CONSTRUCTION FIELD SERVICES DIVISION

Last Revised: August 2020

FOREWORD

This manual has been prepared by the Michigan Department of Transportation to describe the procedures used in testing certain materials, equipment, or operations. The Department generally uses test methods developed by national organizations, such as AASHTO or ASTM. In some cases, no method promulgated by a national organization has been found suitable, so a Michigan Test Method (MTM) has been written in its entirety. In other cases, certain provisions of a national method have been modified by an MTM to meet Department needs.

Each Michigan Test Method has a unique designation shown in the bottom right corner of each page. General classification is indicated by the first digit of the sequential number (1, Aggregates; 2, Concrete; 3, Hot Mix Asphalt; 4, Soils; 5, Metals and Welds; 6, Chemicals and Coatings; 7, Miscellaneous). The number following the dash indicates the year of original adoption, or, in the case of revision, the year of the last revision. Thus, an MTM adopted or revised in 2004 will have as its final number, 04. A letter following this number indicates that an editorial change has been made since the last revision; 04a for the first change, 04b for the second change, etc. Editorial changes include corrections of typographical errors, changes in contact information, business unit names, or formatting changes.

PROCEDURES FOR WRITING AND ADOPTING TEST METHODS Any work unit in the Department may prepare a Michigan Test Method. In general, the format should conform to that used by AASHTO for test methods and recommended practices, although substantial abbreviation is permissible when the method is only to provide limited modifications to a national standard. The test method must start with a paragraph on the scope to define the use of the method.

Each new or revised (major change) test method is reviewed by the Construction Field Services (CFS) Division prior to submittal to the Engineering Operations Committee for final approval. New test method designations will be assigned by the Pavement Operations Engineer at CFS.

All MDOT quality assurance procedures are reviewed and updated by the area that owns the procedure. Procedures are posted on the Department website. It may be necessary to retain superseded pages for reference on projects which have been advertised prior to the date revisions are implemented.

The values stated in either inch-pound units (English) or SI units (metric) are to be regarded as the standard; within the text and tables, metric units are shown in parentheses. The values stated in each system may not be exactly equivalent; therefore, each system must be used independently of the other. Combining values from the two systems may result in nonconformance with the specification.

MDOT MISSION STATEMENT

Providing the highest quality integrated transportation services for economic benefit and improved quality of life.

For copies of this manual, contact the MDOT Publications Office
Telephone: (517) 636-0650

MICHIGAN TEST METHODS

TABLE OF CONTENTS

Part 1. AGGREGATES

MTM 101 Michigan Test Method for Water Asphalt Preferential Test

MTM 102 Michigan Test Method for Abrasion Resistance of Aggregate by the Los Angeles Machine

MTM 103 Michigan Test Method for Determination of Insoluble Residue in Carbonate Aggregates

MTM 104 Michigan Test Method for Petrographic Analysis of Aggregates

MTM 105 Michigan Test Method for Determining Specific Gravity and Absorption of Coarse Aggregates in Petrographic Analysis Samples

MTM 106 Michigan Test Method for Determining Adsorption of Coarse Aggregates in Petrographic Analysis Samples

MTM 107 Michigan Test Method for Sampling Aggregates

MTM 108 Michigan Test Method for Materials Finer than No. 75 µm (No. 200) Sieve in Mineral Aggregates by Washing

MTM 109 Michigan Test Method for Sieve Analysis of Fine, Dense Graded, Open Graded and Coarse Aggregates in the Field

MTM 110 Michigan Test Method for Determining Deleterious and Objectionable Particles in Aggregates

MTM 111 Michigan Test Method for Determining an Aggregate Wear Index (AWI) by Wear Track Polishing Tests

MTM 112 Michigan Test Method for Determining An Aggregate Wear Index (AWI) From Sample Petrographic Composition and Wear Track AWI Factors

MTM 113 Michigan Test Method for Selection and Preparation of Coarse Aggregate Samples for Freeze-Thaw Testing

MTM 114 Michigan Test Method for Making Concrete Specimens for Freeze-Thaw Testing of Concrete Coarse Aggregate

MTM 115 Michigan Test Method for Testing Concrete for Durability by Rapid Freezing in Air and Thawing in Water

MTM 116 Michigan Test Method for Identifying Aggregates That Produce Calcium Carbonate Precipitate

MTM 117 Michigan Test Method for Determining Percentage of Crushed Particles in Aggregates

MTM 118 Michigan Test Method for Measuring Fine Aggregate Angularity

MTM 119 Michigan Test Method for Sampling Open-Graded Drainage Course (OGDC) Compacted In Place

MTM 120 Michigan Test Method for Preparing Concrete Pavement Cores to Be Tested For Durability by Rapid Freezing in Air and Thawing in Water

MTM 121 Michigan Test Method for Testing Concrete Pavement Cores For Durability by Rapid Freezing in Air and Thawing in Water

MTM 122E Michigan Test Method for Determination of the Drainability Characteristics of Granular Materials (English)

MTM 122M Michigan Test Method for Determination of the Drainability Characteristics of Granular Materials (Metric)

MTM 123 Michigan Test Method for Field Determination of the Dry Unit Weight (Loose Measure) of Coarse Aggregates

MTM 124 Michigan Test Method for Determining Aggregate Freeze-Thaw Durability by Unconfined Freeze-Thaw Testing

MTM 128 Michigan Test Method for Determination of Iowa Pore Index of Coarse Aggregates

MTM 129 Michigan Test Method for Leachate Determination of Iron Blast Furnace Slag Used for Lightweight Aggregate Fill

Part 2. CONCRETE

MTM 201	Michigan Test Method for Determination of Pavement Thickness and Depth of Steel Reinforcement in Concrete Pavement by the Coring Method
MTM 203	Michigan Test Method for Testing Concrete Blocks Used for Precast Concrete Slope Paving
MTM 205	Michigan Test Method for Consolidation Method of Concrete Cylinder Test Specimens
MTM 206	Michigan Test Method for Use of Unbonded Caps in Determination of Compressive Strength of Hardened Concrete Cylinders
MTM 207	Michigan Test Method for Testing Concrete
MTM 208	Michigan Test Method for Shotcrete Core Evaluation

Part 3. HOT MIX ASPHALT

MTM 306	Michigan Test Method for Air and Water Method of Determining the Actual Specific Gravity by Single Operator for a HMA Mixture
MTM 308	Michigan Test Method for the Asphalt Immersion Method (Beaker Method) for Determining the Theoretical Maximum Specific Gravity of HMA Paving Mixtures
MTM 309	Michigan Test Method for HMA Marshall Mix Design Procedure
MTM 311	Michigan Test Method for Determining Aggregate Gradation for HMA Mixture
MTM 313	Michigan Test Method for Sampling HMA Paving Mixtures
MTM 314	Michigan Test Method for Theoretical Maximum Specific Gravity and Density of HMA Paving Mixtures
MTM 315	Michigan Test Method for Bulk Specific Gravity and Density of Compacted HMA Mixtures Using Saturated Surface-Dry Specimens
MTM 319	Michigan Test Method for Determination of Asphalt Content From Asphalt Paving Mixtures By the Ignition Method
MTM 320	Michigan Test Method for Determining Specific Gravity and Absorption of Coarse Aggregates
MTM 321	Michigan Test Method for Determining Specific Gravity and Absorption of Fine Aggregates
MTM 322	Michigan Test Method for HMA Mix Design Procedure
MTM 324	Michigan Test Method for Sampling HMA Paving Mixtures Behind the Paver
MTM 325	Michigan Test Method for Quantitative Extraction of Bitumen from HMA Paving Mixtures
MTM 326	Michigan Test Method for Quantitative Measurement of Hot Mix Asphalt (HMA) Pavements

Part 4. SOILS

MTM 401	Michigan Test Method for Transverse Shearing Resistance of Cohesive Soils
MTM 403	Michigan Test Method for Determining the Liquid Limit of Soils
MTM 404	Michigan Test Method for The Moisture-Density Relations of Soils Using a 5.5 pound (2.5 kg) Rammer and a 12 inch (305 mm) Drop
MTM 405	Michigan Test Method for Unconfined Compressive Strength of Cohesive Soil
MTM 406	Michigan Test Method for Natural Moisture-Density Determination of Undisturbed Liner Samples
MTM 407	Michigan Test Method for Natural Moisture Content Determination of Disturbed Soil Samples
MTM 409	Michigan Test Method for Magnetic Particle Determination for Soils or Aggregates
MTM 410	Michigan Test Method for Electrochemical Testing for Mechanically Stabilized Embankments
MTM 411	Michigan Test Method for Compressive Properties of Prefabricated Drainage Systems
MTM 412	Michigan Test Method for Hydraulic Bursting Strength of Nonwoven Geotextile Fabrics - Diaphragm Bursting Strength Tester Method
MTM 413	Michigan Test Method for the Moisture-Density Relations of Recycled Mixtures Using a 10.0 Pound (4.5 kg) Rammer and an 18 Inch (457 mm) Drop

Part 5. METALS AND WELDS

MTM 501 Michigan Test Method for Turn-of-Nut

Part 6. CHEMICALS AND COATINGS

MTM 601	Michigan Test Method for Epoxy Coated Dowel Bars for Load Transfer in Concrete Pavement Joints
MTM 605	Michigan Test Method for Determination of Chloride Ion Content in Hardened Concrete
MTM 613	Michigan Test Method for Determining the Amount of Zinc and Clear Coat on a Fence Post with a Multi-Coated System
MTM 614	Michigan Test Method for Bond Release Agents for Epoxy Coated Dowel Bars

Part 7. MISCELLANEOUS

MTM 704	Michigan Test Method for Wiping Cloths for Laboratory and General Use
MTM 707	Michigan Test Method for Minimum Soil Resistivity
MTM 709	Michigan Test Method for Plastic Traffic Cones
MTM 711	Michigan Test Method for Glass Beads for Pavement Marking
MTM 712	Michigan Test Method for Physical Tests of Paint for Pavement Marking
MTM 713	Michigan Test Method for Sampling Timber Guardrail Posts, Blocks and Sign Posts to Test for Retention and Penetration of Chemical Treatment
MTM 716	Michigan Test Method for Inspection and Pull Testing of Temporary Concrete Barrier Loops
MTM 717	Michigan Test Method for Sign Post Driving Heads
MTM 718	Michigan Test Method for Testing Corrugated Polyethylene Pipe and Corrugated Polyethylene Tubing
MTM 719	Michigan Test Method for Tungsten Carbide Inserts in Underbody Blades
MTM 720	Michigan Test Method for Corrugated Polyethylene Pipe (Bell and Spigot Fused Couplings)
MTM 721	Michigan Test Method for Soil Anchor Driving Heads
MTM 722	Michigan Test Method for Surface Smoothness
MTM 723	Michigan Test Method for Water Tightness Testing of Culvert and Sewer Joints Up to 24 Inches (600 mm) in Diameter
MTM 724	Michigan Test Method for Smooth-Wall Coilable Polyethylene (PE) Conduit and Pipe
MTM 725	Michigan Test Method for Determining Ride Quality Using a California Type Profilograph
MTM 726	Michigan Test Method for Determining Ride Quality Using a GM Type Rapid Travel Profiler
MTM 727	Michigan Test Method for Manual Analysis of California Type Profilograms
MTM 728	Michigan Test Method for Corrugated Polyvinyl Chloride (PVC) Pipe - AASHTO M 304

MTM 729 Michigan Test Method for Certification of California Type Profilographs.

MTM 730 Michigan Test Method for Certification of Profilers

MICHIGAN TEST METHOD
FOR
WATER ASPHALT PREFERENTIAL TEST

1. Scope

1.1 This test covers the determination of the water-resisting properties of mineral filler to be used in HMA mixtures.

2. Applicable Document

AASHTO T-88

3. Equipment

3.1 *Stirring Apparatus* - A mechanically operated stirring apparatus consisting of an electric motor suitably mounted to turn a vertical shaft at a speed not less than 10,000 rpm without load and a replaceable stirring paddle made of metal, plastic, or hard rubber (equipment similar to that in AASHTO T-88).

3.2 *Water Bath* - A water bath that can be maintained at a temperature of 140 F (60 C).

3.3 *Glass Bottles* - Two 236 mL wide mouth, round, glass bottles with screw caps.

4. Procedures

4.1 Place 50 mL of liquid asphalt, SC -250, in a loosely covered sample bottle and heat in an oven at 140 F (60ºC) for approximately one hour. Add a 10-gram sample of mineral filler, passing the No. 200 (75 μm) sieve, to the bottle and place it in a water bath having a temperature of 140 F (60ºC). While still in the bath, mix the materials in the bottle by use of a mechanical mixer for a period of 5 minutes. Add 100 mL of distilled water at a temperature of 140 F (60ºC) and continue mixing for an additional period of 5 minutes. Remove from the bath and allow the mixture to stand until the uncoated particles settle to the bottom and the water becomes clear.

5. Measure of Results

5.1 The percentage of uncoated particles in the bottom of the bottle is determined by visually comparing the depth of mineral filler with a reference bottle containing 25 percent by weight of the same material in clear water. Test results are satisfactory if not more than an estimated 25 percent of the mineral filler in the sample has separated from the HMA material and settled to the bottom of the bottle.

6. Precaution

6.1 If readings are delayed for a period longer than 3 hours, a portion of all of the mixture of HMA material and mineral filler may settle and obscure the reading.

MICHIGAN TEST METHOD
FOR
ABRASION RESISTANCE OF AGGREGATE
BY THE LOS ANGELES MACHINE

1. Scope

1.1 This method covers a procedure for testing aggregates for resistance to abrasion using the Los Angeles machine.

1.2 Except as described herein, the method will be in conformance with AASHTO Method T 96. This modification of T 96 is to provide additional standard gradations of aggregate, which more nearly conform to the coarse fraction of dense-graded aggregates and some coarse aggregates for HMA mixtures used by the Michigan Department of Transportation.

2. Abrasive Charge

2.1 The tabulation of abrasive charges shown in T 96 will be extended as follows:

Grading	Number of Spheres	Weight of Charge, g
E	10	4166 ± 25
F	10	4166 ± 25

3. Test Sample

3.1 Table 1 of T 96, Gradings of Test Samples, will be revised as follows to include "E" and "F" gradings.

(SEE NEXT PAGE)

TABLE 1
Gradings of Test Sample

Sieve Size (inches)		Weight of Indicated Sizes, g, Grading					
Passing	Retained On	**A**	**B**	**C**	**D**	**E**	**F**
1 1/2	1	1250 ± 25	---	---	---	---	---
1	3/4	1250 ± 25	---	---	---	---	---
3/4	1/2	1250 ± 10	2500 ± 10	---	---	---	---
1/2	3/8	1250 ± 10	2500 ± 10	---	---	2500 ± 10	1250 ± 10
3/8	No. 3	---	---	2500 ± 10	---	---	1250 ± 10
No. 3	No. 4	---	---	2500 ± 10	---	2500 ± 10	2500 ± 10
No. 4	No. 8	---	---	---	5000 ± 10	---	---
TOTAL		5000 ± 10	5000 ± 10	5000 ± 10	5000 ± 10	5000 ± 10	5000 ± 10

4. Retests

4.1 One retest will be conducted on a sample when the initial test result is 41 or 42 percent loss for a specification limit of 40 percent loss.

4.1.1 When the specification limit is 45 percent loss, one retest will be conducted if the initial test result is 46, 47 or 48 percent loss.

4.1.2 If the initial test result is 51, 52 or 53 percent loss, one retest will be done when the specification limit is 50 percent loss.

4.2 Both L.A. Abrasion tests will be averaged and rounded off to the nearest whole percent. The average must be less than or equal to the specific specification limit.

MICHIGAN TEST METHOD
FOR
DETERMINATION OF INSOLUBLE RESIDUE IN CARBONATE AGGREGATES

1. Scope

1.1 This method covers the determination of the quantity of insoluble residue present in carbonate aggregates using hydrochloric acid solution to react the carbonate material.

2. Referenced Documents

2.1 ASTM Standards:

C 294 Standard Descriptive Nomenclature for Constituents of Natural Mineral aggregate.
C 702 Standard Practice for Reducing Field Sample of Aggregates to Testing Size
E 11 Standard Specification for Wire Cloth Sieves for Testing Purposes

3. Apparatus and Supplies

3.1 Balance with capacity of 150 g or more, accurate to 0.1 g.

3.2 Oven capable of maintaining a temperature of 110°C + 5°C.

3.3 Fume hood.

3.4 Sieves conforming to ASTM E 11, having a diameter of 3 inches (75 mm), including the No. 100 (150 μm) and No. 200 (75 μm) sizes.

3.5 Glassware (or plasticware) - 2000 mL beaker, 2000 mL filtering flask, 111 mm Buchner funnel, and miscellaneous supplies, including blue litmus paper or other pH sensitive indicator, sample containers, and hot plate.

3.6 Aspirator or other vacuum filtration apparatus.

3.7 Filter paper, Whatman No.40 or equivalent with 110 mm diameter.

3.8 De-ionized water.

3.9 Hydrochloric acid (1 + 1) - Mix a quantity of concentrated hydrochloric acid (sp gr 1.19) with an equal volume of de-ionized water. When mixing fresh one to one solution, allow it to cool to room temperature before use. (Follow OSHA precautions for hazardous materials).

3.10 Trichloroethylene (follow OSHA precautions for hazardous chemicals.)

4. Sample

4.1 The sample shall be representative of the source. Unless otherwise provided, reduce the sample to an appropriate quantity according to ASTM C702. Grade the sample into aggregate particles passing the d inch (9.5 mm) sieve and retained on the No. 8 (2.36 mm) sieve, using sieves per ASTM E 11. Using de-ionized water, rinse the sample to remove surface coatings, then oven-dry at 110°C + 5°C to constant weight.

4.2 If the aggregate contains exposures of HMA material, place the sample in a 2000 mL glass beaker and immerse with 600 mL of trichloroethylene. Allow to soak for two hours, stirring occasionally. After the soak period, decant the trichloroethylene, taking care to avoid loss of any solids, then oven-dry at 110°C + 5°C to constant weight. Follow OSHA procedures for handling and disposal of the trichloroethylene. (Trichloroethylene treatment must be done under a fume hood).

4.3 Prepare a sample quantity of approximately 100 g, following ASTM C702.

5. Procedure

5.1 Weigh the sample to 0.1 g and place in a 2000 mL beaker. Add 300 mL of 1:1 hydrochloric acid in small amounts, stirring occasionally to prevent evolved foam from over-filling the beaker. Let stand until effervescence ceases. (Acid treatment must be performed under a fume hood.)

5.2 Add an additional 100 mL of 1:1 hydrochloric acid, then stir. If effervescence recurs, add an additional 100 mL of acid. Continue acid treatment until no further effervescence occurs. Gentle heating on a hot plate will aid in dissolving dolomitic materials that may be slow to react. Allow insoluble residue to settle, then decant clear solute, taking care to avoid loss of residue. Refill beaker with water. Stir, then allow insoluble residue to settle. Test rinse water for pH. Repeat rinsing process until pH of approximately 7 indicates that acid has been removed from the sample.

5.3 Decant excess rinse water, then pour the insoluble residue onto a No. 200 (75 jtm) sieve protected by a No. 100 (150 jtm) sieve over a clean beaker, taking care to avoid loss of insoluble residue. Using de-ionized water, rinse until all insoluble residue finer than the No. 200 (75 jtm) sieve is collected in the beaker. Transfer the insoluble residue collected on the No. 100 (150 jtm) and No. 200 (75 jtm) sieves into a container, then oven-dry at 110°C + 5°C to constant weight.

5.4 Record the weight of a filter paper, then place in a Buchner funnel or other filtration apparatus. Filter the rinse water and insoluble residue finer than the No. 200 (75 jtm) sieve. Transfer the filter paper and insoluble residue to a container, then oven-dry at 110°C + 5°C to constant weight.

5.5 Weigh and record the weights of the insoluble residue fractions to the nearest 0.1g. If desired, grade the insoluble residue retained on the No. 200 (75 jtm) sieve into sieve fractions for examination.

5.6 Examine the insoluble residue fractions, retained and passing the No. 200 (75 tm) sieve, by stereomicroscope to identify the insoluble residue constituents, according to ASTM C294.

6. Calculations

6.1 Calculate the percent insoluble residue retained on the No. 200 (75 tm) sieve, as follows:

Insoluble Residue Retained No. 200 (75 tm), % = $(W_2/W_1) \times 100$

Where:
W_1 = Wt. of original sample, g
W_2 = Wt. of insoluble residue retained on No. 200 (75 tm) sieve, g

6.2 Calculate the percent insoluble residue passing the No. 200 (75 tm) sieve, as follows:

Insoluble Residue Passing No. 200 (75 tm), % $=[(W_3 - W_4) / W_1] \times 100$

Where:
W_3 = Wt. of insoluble residue passing No. 200 (75 tm) + filter paper, g
W_4 = Wt. of filter paper

6.3 Calculate the total insoluble residue as the sum of the percentages determined in 6.1 and 6.2.

7. Report

7.1 Report the percentages of insoluble residue calculated in 6.1, 6.2, and 6.3, and composition of the insoluble residue.

Figure 1.

WORKSHEET FOR DETERMINATION OF
INSOLUBLE RESIDUE IN CARBONATE AGGREGATES

Sample No. 94A-3297
Sample Source Ozark Pit 49-98
Sample Type Quarried Ledgerock
Initial Oven-dry Wt., g 103.1
Filter Paper Tare Wt.,g 0.9
<No. 200 Can Wt., g 33.1

Date Analyzed 10-05-94

Gradation of Insoluble Residue				
Sieve No.	**I.R. + Tare, g**	**Tare, g**	**I.R. - Tare, g**	**I.R., %**
No. 4 (4.75 mm)	--.-	--.-	--.-	--.-
No. 8 (2.36 mm)	33.2	33.2	TR	TR
No. 16 (1.18 mm)	33.4	33.4	TR	TR
No. 30 (600 mm)	33.0	33.0	TR	TR
No. 50 (300mm)	32.8	32.8	TR	TR
No. 100 (150 mm)	33.1	33.1	TR	TR
No. 200 (75 tm)	33.0	33.0	TR	TR
<No. 200 (75 tm)	34.1	34.0	0.1	0.1

Total Insoluble Residue > No. 200 (75 tm).....TR
Total Sample Insoluble Residue 0.1

Composition of Insoluble Residue > No. 200 (75 tm) :

Insoluble residue coarser than No. 200 (75 tm) is composed of trace amounts (less than 0.1 percent) of white quartz grain clusters and grains, rounded, frosted quartz grains, and few pyrite grains.

Composition of Insoluble Residue < No. 200 (75 tm):

Insoluble residue finer than No. 200 (75 tm) is composed of gray argillaceous material, quartz grains, and pyrite fragments.

Research Laboratory Section
Secondary Governmental Complex
0373 P.O. Box 30049
Lansing, Michigan 48909

File 300

Job Number
Control Section
Laboratory Number MR 94-19A
Date

REPORT OF TEST

Report on Sample of: COARSE AGGREGATE (Crushed Rock)

Date Sampled: 9/ 30/ 94 Date Received: 10/4/94

Source of Material: Ozark Pit No. 49-98

Sampled From: Stockpile at Source Quantity Represented: 40,000 Tons

Submitted By: J. Dierck, Dist. Materials Supervisor

Intended Use: HMA Mixtures Specification: 2003 MDOT Standard Specifications

TEST RESULTS

Testing Laboratory Sample No.	94A-3297
Insoluble Residue, percent Ret. No. 200 (75 tm)	Trace
Insoluble Residue, percent Pass No. 200 (75 tm)	0.1
Total Insoluble Residue, percent	0.1

REMARKS: Tested for Information

Insoluble residue coarser than No. 200 (75 tm) is composed of white quartz grain clusters and fragments, few rounded, frosted quartz grains, and few pyrite fragments. Insoluble residue finer than No. 200 (75 tm) is composed of gray argillaceous material, quartz grains, and pyrite fragments.

cc: J. Dierck - District 2
A. Robords

Signed: Supervisor - Chemical Technology Unit

For questions concerning analytical results, please contact David Long at (517)322-6138.

MICHIGAN TEST METHOD
FOR
PETROGRAPHIC ANALYSIS OF AGGREGATES

1. Scope

1.1 This practice outlines procedures for the petrographic examination of samples of aggregates. The samples examined may have been taken from (1) construction projects; (2) hauling units; (3) stockpiles at sources; (4) exposed faces at non-producing quarries or sand and gravel deposits; and (5) undeveloped sand and gravel deposits.

1.2 The petrographic procedures outlined herein are applicable to the examination of all types of coarse and fine aggregates including quarried material, natural sand and gravel, blast furnace, steel furnace and reverberatory furnace slags and other synthetic aggregate materials.

1.3 Petrographic examinations are made to (1) describe and classify the constituents of the sample; (2) determine the relative amounts of the sample constituents; and (3) determine the physical and chemical properties of the constituents of the sample that have a bearing on the quality of the material for its intended use. These may include specific gravities, absorption, adsorption, mohs hardness, insoluble residue, and calcite-dolomite ratio.

NOTE: This practice is based on ASTM C 295, to which the user may refer for additional information. Reference should also be made to ASTM C 294 for proper nomenclature.

2. Applicable Documents

2.1 ASTM Standard Test for:

C 117 Material Finer than No. 200 (75μm) Sieve in Mineral Aggregates by Washing

C 127 Specific Gravity and Absorption of Coarse Aggregates

C 136 Sieve Analysis of Fine and Coarse Aggregates

C 294 Descriptive Nomenclature of Constituents of Natural Mineral Aggregates

C 295 Practice for Petrographic Examination of Aggregates for Concrete

C 702 Reducing Field Samples of Aggregates to Testing Size

2.2 *MTM Standards*:

MTM 103 Test Method for Determination of Insoluble Residue in Carbonate Aggregate Materials

MTM 105 Practice for Specific Gravity and Absorption of Coarse Aggregates in Petrographic Analysis Samples

3. Apparatus and Supplies

3.1 The items listed below are recommended for the proper analysis of materials to be examined. The list is not intended to exclude other items which would serve a similar function or to require that all items must be available. The selection of apparatus and supplies to be used is left to the judgment of the petrographer doing the analyses.

3.1.1 Apparatus and supplies for sample preparation:

- Rock cutting saw.
- Horizontal grinding wheel.
- Polishing wheel.
- Abrasives.
- Microscope slides and accessories.

3.1.2 *Apparatus and supplies for examination of specimens*:

- Polarizing microscope.
- Stereoscopic microscope.
- Microscope lamps.
- Immersion media.
- Photo-micro-graphic camera and accessories.
- Assorted bottles for acid, water and other reagents.
- Assorted forceps, needle holders and points.

NATURAL SAND AND GRAVEL

4. Selection of Samples For Examination

4.1 Samples of gravel and sand for petrographic examination should be sieved in accordance with ASTM C 136, including washing as described in ASTM C 117, to provide samples of each sieve size. An additional portion of fine aggregate should then be sieved without washing to provide a sample of the material finer than the No. 200 (75 μm) sieve. Each sieve fraction should be examined separately, starting with the largest size available, as rocks are more easily recognized in larger pieces.

4.2 The number of particles examined, identified, and counted in each sieve fraction will depend on the required accuracy of the estimate of constituents present in small quantities. At least 300 particles of each sieve fraction should be identified and counted in order to obtain reliable results. Precise determinations of small quantities of important constituents will require counts of larger number of particles. Rock particles are to be identified in a surface wet condition which enhances the color and structure of the particles making identification easier.

5. Examination of Natural Gravel

5.1 *Coatings* - The particles should be examined to determine if exterior coatings are present.

If present, the coating material is to be identified to determine if it may be deleterious (opal, gypsum, easily soluble salts, organic matter). The firmness of bond also should be determined.

5.2 *Rock Types* - Each sieve fraction should be sorted into individual types by visual examination. If all the rock groups present are identifiable by examination of a natural or broken surface, and by scratch or acid tests, no further identification is needed. Fine grained rocks that cannot be identified megascopically or that may contain constituents known to be deleterious should be examined with a stereo-microscope. If they cannot be identified by that means, they should be identified by means of a petrographic microscope. In some instances petrographic methods such as X-ray diffraction may be required to identify fine grained rock materials.

5.2.1 The separated groups belonging to each rock type should be examined to determine whether a further separation by physical condition is necessary. Frequently particles in several degrees of weathering will be found in a group. They should be sorted into categories based on condition. The types of categories intended are: (1) fresh, dense; (2) moderately weathered; (3) severely weathered; or (1) dense; (2) porous (or porous and friable). It usually is not practicable to recognize more than three conditions per rock type and one or two may be sufficient. An important constituent present in larger quantities may sometimes require separation into four groups by condition. The conspicuous example is chert when it may be an important constituent of the sample. It may be present as dense, unfractured chert; as vuggy chert; as porous chert; as dense but highly fractured chert; or as any combination of the above.

5.3 *Record* - Notes should be taken during the examination. Each rock type should be described. The relevant features may include the following:

- Particle shape.
- Particle surface.
- Grain size.
- Texture and structure, including packing and cementation of grains.
- Color.
- Mineral composition.
- General physical condition of the rock type.
- Presence of constituents known to cause deleterious chemical reaction in concrete.
- Mohs hardness, if applicable.

5.4 Particle counts should be recorded so that tables can be made for inclusion in the report. Tables should be prepared showing the composition and condition of the sample by sieve fraction, and the weighted average composition based on the identification of at least 300 particles on each sieve fraction. Descriptions of constituent groups should be prepared containing the relevant features among those enumerated above and should include any additional pertinent data.

5.5 Specific gravities and absorptions shall be determined on all constituent groups. The adsorption of the material shall be determined on a representative portion of the sample. These tests shall be conducted in accordance with Michigan Test Methods and will be included in the report (See 12.6).

6. <u>Examination of Natural Sand</u>

6.1 The procedure for the examination of natural sand is similar to that for the examination of gravel, with the modification necessitated by the differences in particle size.

6.2 Sizes coarser than No. 30 (600 jtm) - Each sieve fraction present that is coarser than the No. 30 (600 jtm) sieve should be reduced in a sample splitter (ASTM C 702) until a split or splits containing at least 300 particles are obtained. The reduced sample of each sieve fraction should be examined, and its constituents identified and counted, using the stereoscopic microscope. It is convenient to spread out the sample in a flat bottom glass dish such as a Petri dish and manipulate the grains with a forceps and dissecting needle. The identification of grains in the coarser sand sizes is often easier when the grains are just submerged in water. The submergence generally lessens reflection from the outer surfaces and may show diagnostic features that cannot be seen when the grains are dry.

6.3 Sizes finer than No. 30 (600 jtm) - The sieve fractions finer than the 600 jtm (No. 30) sieve should be reduced in a sample splitter to about 4 or 5 grams. These splits should be further reduced on a miniature splitter or by coning and quartering with a spatula on a clean sheet of paper. A representative portion of each reduced split should be mounted in immersion oil on a clean glass slide and covered with a clean cover glass. No entirely satisfactory method of reducing a split to about 300 grains is known. The reduced split can be sampled by spreading it in a thin layer on glass or clean paper, dragging the end of a dissecting needle moistened in immersion oil through the sample and transferring the grains that adhere to the needle to a drop of immersion oil on a clean slide. If the dissecting needle is made of magnetized steel, a concentration of magnetic minerals may result. It is usually necessary to make several mounts on the No. 50 (300 jtm) and No. 100 (150 jtm) sieve fractions to obtain at least 300 grains of each. The index of the immersion oil should be selected to make the identification of the important constituents as easy and as definite as possible.

The use of an immersion oil with an index of or just below the lower index of quartz (1.544) is recommended. The slide should be mounted on a petrographic microscope equipped with a mechanical stage. Several traverses should be made, and each grain that passes under the cross hairs should be identified and counted. Care should be taken to move the slide on the north-south adjustment between traverses so that no grain will be counted twice. Each sieve fraction passing the No. 30 (600 jtm) sieve and retained on the No. 200 (75 jtm) sieve should be examined in this way. Ordinarily the material passing the No. 200 (75 jtm) sieve is mounted on a glass slide following the procedure described above, examined by means of the petrographic microscope, and its composition estimated.

DRILLED CORE, LEDGE ROCK, CRUSHED STONE AND MANUFACTURED SAND

7. Examination of Drilled Core

7.1 Each core should be examined and a log prepared showing the following: (1) footage of core recovered, core loss and location; (2) location and spacing of fractures and parting planes; (3) lithologic type or types; (4) alteration of types; (5) physical condition and variations in condition; (6) hardness; (7) obvious porosity; (8) grain size, variations in grain size and texture; and (9) the presence of constituents capable of deleterious reaction in concrete. If the surface of the core being examined is wetted, it is usually easier to recognize significant features and changes in lithology. Most of the information usually required can be obtained by careful visual examination and scratch and acid tests. In case

of fine-grained rocks, it may be necessary to examine parts of the core, using the stereoscopic microscope, or to prepare thin sections of selected portions. Some considerations and procedures are more applicable to particular rock types than to others. Ordinarily, the layered rocks considered for concrete aggregate will be carbonates. One of the most important questions arising in the examination of carbonates is that of the presence and distribution of chert and argillaceous impurities. Where argillaceous impurities are present, it should be determined whether they actually consist of clay minerals or of other minerals in clay sizes. X-ray diffraction analysis is especially valuable in identification and quantitative determination of clay minerals. If sand grains are present in the carbonate, they should be described as to percent of sample, size, shape of grains, mineralogy and any other feature deemed necessary.

8. Examination of Ledge Rock

8.1 The procedure used in examination should be the same as for core samples to the extent that the spacing of samples and size of the individual pieces allow. If the sample consists of a relatively large quantity of broken stone produced by blasting, it is desirable to inspect the whole sample, estimate the relative abundance of rock types or varieties present, and sample each type before further processing. Subsequent procedure should be the same as given in Section 9 for crushed stone.

9. Examination of Crushed Stone

9.1 The procedure for examination of crushed stone should be similar to that for natural gravel, except that necessary quantitative date should be obtained by particle counts of the separate sieve fractions.

9.2 When called for, the percentage of insoluble residue shall be determined on quarried carbonate aggregates in accordance with Michigan Test Method 103.

10. Examination of Manufactured Sand

10.1 If no samples of the rock from which the sand was produced are available, the examination procedure should be similar to that for natural sand, with particular emphasis on the amount and extent of fracturing developed by the milling operations.

0. Examination of Synthetic Aggregates

11.1 The procedure for examination of synthetic aggregates should be similar to that for examination of natural gravels. The particles should be sorted into categories such as (1) porous; (2) dense; (3) glassy.

CALCULATIONS AND REPORT

1. Calculations

12.1 Calculate the composition of each sieve fraction of a heterogeneous sample and the weighted average composition of the whole sample.

12.2 Express the composition of each sieve fraction by summing the total number of particles of that fraction counted, and calculating each constituent in each condition as

a percentage of that total amount (as number of particles in percent, in each sieve fraction). It is convenient to calculate and record the percentages to tenths at this stage. An example of these calculations is given in the upper half of Table 1.

12.3 Obtain the weighted percent of the sieve fraction in the whole sample (individual percentages retrained on consecutive sieves) from the gradation of the sample as determined by ASTM C 136, but in the case of coarse aggregates ignoring any material finer than a No. 4 (4.75 mm) sieve (or other sieve designated as the nominal minimum size for the aggregate).

12.4 By adding the weighted percentages of each constituent in each sieve fraction, obtain the weighted percentage of each constituent in the whole sample (see under Weighted Composition of Sample in Table 1).

12.5 Construct a table to show the composition of each sieve fraction. Report values to the nearest whole number. Report constituents amount to 0.5 percent or less of a sieve fraction or of the whole sample as traces. Table 2 is an example constructed from the data obtained in Table 1. As a convention, the total in each sieve fraction and the total in the whole sample shall each be 100 percent without the traces. Difficulties in abiding by this convention can usually be avoided by grouping minor constituents of little engineering importance. It is preferable to tabulate constituents known to react deleteriously in concrete so that their distribution will be apparent from inspection of the table, even though the amount in the whole sample or in any fraction is very small.

12.6 Construct a table to show the Specific Gravity and Absorption data on each constituent group and the average values for the total sample. The table also shall show the adsorption value of a representative portion of the sample. Table 3 is an example of this data.[1] Table 3 also shall contain a "Calculated Aggregate Wear Index Number" based on the computed composition of the sample.[2]

13. Report

13.1 The report of the petrographic examination should consist of two principal parts, the summary report and the detailed report. The summary report customarily consists of two paragraphs which summarize, respectively, (1) the essential data needed to identify the sample as to source, type of treatment or production processing prior to sampling, and proposed use, (2) a brief description, including the essential data on composition and properties of the material as revealed by the examination. The complete report records the test procedures employed, the data developed on the composition of the material, and a description of the nature and features of each important constituent of the sample, accompanied by such tables and photographs as may be required to adequately present the findings of the examination. Petrographic

[1] See MTM 105 for the procedure for calculating specific gravity and absorption.

[2] The Calculated Aggregate Wear Index Number is computed from values obtained on the Department's Wear Track for typical rock types as reported in Research Report No. R-1228 and the computed sample composition. See MTM 112.

data in the summary should be expressed in terms likely to be intelligible to the Engineer who must make the ultimate decision as to the suitability of a material for its intended use.

13.2 The petrographic report should be a statement of the findings of the examination. When the sample has been found to possess properties or constituents that are known to have specific unfavorable effects for the aggregate's intended use, those properties or constituents should be described qualitatively and, to the extent practicable, quantitatively. The unfavorable effects that may be expected to ensue should be mentioned also. When appropriate, it should be stated that a given sample was not found to contain any undesirable features. The report should not, however, contain a general statement of opinion by the petrographer concerning the quality of the material. The petrographer should avoid such general statements of opinion, since they are subjective and therefore not properly a part of a report of objective findings, and since they can properly be made only when data on different materials can be compared in connection with the requirements for a specific use.

13.3 The petrographic report should include recommendations regarding any additional petrographic, chemical, physical, or geologic investigations that may be required to evaluate adverse properties that are indicated by the petrographic examination that has been performed. Supplementary petrographic investigations might include qualitative or quantitative analysis of the aggregate or of selected portions thereof by X-ray diffraction, differential thermal methods, or other procedure that are directed to identification and description of the constituents of the aggregate.

TABLE 1

Calculation of Results of Particle Count
Testing Laboratory Sample No. 00A-000

Composition of Fractions Retained on Sieves Shown Below

Rock Type	3/4 inch (19.0 mm)		2 inch (12.5 mm)		3/8 inch (9.5 mm)		No. 4 (4.75 mm)	
	Number of Particles	percent	Number of Particles	percent	Number of Particles	percent	Number of Particles	percent
A	186	62	210	70	210	70	150	50
B	111	37	87	29	75	25	129	43
C	3	1	3	1	15	5	21	7
Totals	300	100	300	100	300	100	300	100
Individual Percentage retained on sieve		17.4		32.6		29.5		20.5

Weighted Percentages of Constituents in Each Sieve Fraction

	3/4 inch (19.0 mm)	2 inch (12.5 mm)	3/8 inch (9.5 mm)	No. 4 (4.75 mm)	Weighted Composition of Sample
A	10.8	22.8	20.7	10.3	64.6
B	6.3	9.4	7.3	8.8	31.8
C	0.3	0.4	1.5	1.4	3.6
Total in Sieve Fraction	17.4	32.6	29.5	20.5	

TABLE 2

Petrographic Composition
Testing Laboratory Sample No. 00A-000

Sieve Fraction Analyzed

Rock Type	3/4 inch (19.0 mm)	2 inch (12.5 mm)	3/8 inch (9.5 mm)	No. 4 (4.75 mm)	Computed Sample Composition
A	62	70	70	50	65
B	37	29	25	43	32
C	1	1	5	7	3
Total	100	100	100	100	100

NOTE: Computed sample composition is based upon counts of 300 particles contained in each of the sieve fractions noted.

TABLE 3

Specific Gravity, Absorption, and Adsorption Data
Testing Laboratory Sample No. 00A-000

Rock Type	Specific Gravity			Absorption Percent	Adsorption Percent	Composition Percent By Weight
	Bulk Dry	Bulk SSD	Apparent			
A	2.64	2.66	2.70	0.68		65
B	2.52	2.59	2.69	2.47		32
C	2.72	2.75	2.82	1.31		3
Total Sample	2.68	2.72	2.74	1.07		100

NOTE: Values are computed from determinations made on all sample material contained in the categories noted.

Calculated Aggregate Wear Index Number - XXX

MICHIGAN TEST METHOD
FOR
DETERMINING SPECIFIC GRAVITY AND ABSORPTION OF COARSE AGGREGATES IN PETROGRAPHIC ANALYSIS SAMPLES

1. Scope

1.1 This method covers the determination of bulk and apparent specific gravities and absorption of individual petrographic rock types obtained from petrographic analysis samples.

2. Referenced Documents

2.1 *ASTM Standards*:

C127 Standard Test for Specific Gravity and Absorption of Coarse Aggregate

2.2 *MDOT Standards*:

MTM 104 Practice for Petrographic Analysis of Aggregates

3. Apparatus

3.1 *Balance* - A weighing device with a 2000 gram capacity, which meets the requirements of ASTM C127 for sensitivity, readability, and accuracy. The balance shall be equipped for suspending the sample container from the center of the scale pan or balance. The suspension wire shall be of the smallest practical diameter.

3.2 *Container* - A bucket or wire basket of approximately equal breadth and height with drain holes smaller than the finest materials to be weighed, and of a large enough capacity to accommodate the sample.

3.3 *Oven* - An oven capable of maintaining a temperature of 110°C + 5°C.

4. Sample

4.1 The sample shall be the individual petrographic rock fractions of the sample as separated in the petrographic examination, according to MTM 104.

4.2 Each petrographic rock fraction for specific gravity and absorption shall contain all rock particles from all sieve fractions analyzed.

4.3 Specific gravity and absorption values shall not be determined on petrographic rock types identified as present in trace amounts.

5. Procedure

5.1 The petrographic rock types to be tested shall be clean and free of dust before being dried to a constant weight in an oven at a temperature of 110ºC + 5ºC. Allow sample to cool to room temperature, then weigh to obtain the oven-dry weight. This weighing yields A (below). Immerse the sample in water for a period of 24 + 4 hours.

5.2 Remove the sample from water after the 24 + 4 hour soak period and dry to a saturated, surface-dry condition by rolling the particles on an absorbent material to remove any visible water film. Weigh the sample immediately to avoid evaporation of absorbed water. This weighing yields B (below).

5.3 Immediately after obtaining the saturated, surface-dry weight, place the sample in the sample container, and obtain the weight in water. This weighing yields C (below).

6. Calculations

6.1 Calculate values for specific gravity and absorption from the following terms:

A = Weight of oven-dry sample fractions in air, g
B = Weight of saturated surface dry (ssd) sample fractions in air, g
C = Weight of saturated sample fractions in water, g

A = Combined weights of oven dry sample fractions in air, g
B = Combined weights of ssd sample fractions in air, g
C = Combined weights of saturated sample fractions in water, g

6.1.1 Bulk Specific Gravity (Dry Basis)

Rock Type Fraction = $\frac{A}{B - C}$

Total Sample = $\frac{A}{B - C}$

6.1.2 Bulk Specific Gravity (Saturated Surface Dry Basis)

Rock Type Fraction = $\frac{B}{B - C}$

Total Sample = $\frac{B}{B - C}$

6.1.3 Apparent Specific Gravity

Rock Type Fraction = $\frac{A}{A - C}$

Total Sample = $\frac{A}{A - C}$

6.1.4 Absorption, %

Rock Type Fraction = $\frac{B - A}{A}$ X 100

Total Sample = $\frac{B - A}{A}$ X 100

6.2 As an alternative to the above procedure for calculation of the specific gravity and absorption of the total sample, the methods in ASTM C127 for calculation of average values may be used.

7. Report

7.1 The specific gravity and absorption values shall be incorporated into the Petrographic Analysis report described in MTM 104. The tabulation shall include the specific gravity and absorption values for all petrographic rock types identified, except trace amounts. The tabulation shall also include the total sample specific gravity and absorption values.

MICHIGAN TEST METHOD
FOR
DETERMINING ADSORPTION OF COARSE AGGREGATES
IN PETROGRAPHIC ANALYSIS SAMPLES

1. Scope

1.1 This method covers the determination of adsorption of coarse aggregates. The sample tested may consist of rock types obtained from petrographic analyses or may be produced aggregate submitted for laboratory tests. Only material coarser than the No. 4 (4.75 mm) sieve is to be utilized.

1.2 This practice describes the procedure for determining the ability of an aggregate to adsorb water at two levels of relative humidity, 45% and 95%, giving an indication of the material's pore size, pore size distribution and internal surface area.

2. Referenced Documents

2.1 *MDOT Standards*:

MTM 104 Standard Practice for Petrographic Analysis of Aggregates

3. Apparatus and Supplies

3.1 *Balance* - a weighing device with a 2000 gram capacity, accurate to the nearest 0.01 g.

3.2 *Sample containers* - Glass jars with a capacity of 1000 g and covers fitting tight enough to prevent possible loss or contamination and rapid change in humidity in the containers.

3.3 *Humidity cabinet* - A specially designed cabinet sealed against air flow in or out and capable of holding 36 sample jars. The cabinet will be maintained at a temperature of 25 ^{o}C + 2 ^{o}C and be equipped with a fan to circulate air. Mechanical humidity controls will be permitted in lieu of salts.

3.4 *Oven* - The oven must be capable of maintaining a temperature of 110°C + 5°C.

3.5 *Salts* - The following salts will be used to maintain the stated relative humidities:

Potassium carbonate ($K_2CO_3.2H_2O$) for R. H. 45%
Sodium sulfite ($Na_2SO_3.7H_2O$) for R. H. 95%

4. Sample

4.1 The sample may consist of rock types separated from a petrographic analysis sample (as described in MTM 104) or may be a split of a representative sample submitted for routine laboratory tests or mix design, and weigh approximately 100 g.

4.2 Each sample for adsorption determination will contain all rock particles from all sieve fractions analyzed.

4.3 Adsorption determinations will not be made on petrographic rock types identified as present in trace amounts.

5. Procedure

5.1 If using an automatically controlled humidity cabinet, set controls to maintain a relative humidity of 45 percent. Allow humidity to stabilize before use.

5.2 If maintaining humidity by use of salts, place a tray containing a supersaturated solution of potassium carbonate in the humidity cabinet, using a sufficient quantity to maintain a relative humidity of 45 percent.

5.3 Prepare approximately 100 g of representative sample, using only material coarser than a No. 4 (4.75 mm) sieve. The test specimens (see 3.1, 3.2, and 3.3) will be clean and free of surface dust (washed, if necessary). Place the specimens in sample jars and dry for 24 hours in a forced draft oven at a temperature of 100ºC + 5ºC.

5.4 When dried, remove the sample jars from the oven, place in a desiccator with sample covers loosened, and allow to cool to room temperature.

5.5 Remove sample containers from the desiccator, immediately cap securely, and weigh the samples in the covered jars to the nearest 0.01 g to determine the dry mass.

5.6 Uncap the sample jars, then place the uncapped jars on a tray in the humidity cabinet. Allow to remain for 3 days.

5.7 Remove the tray of sample jars from the humidity cabinet, immediately recap the specimen jars, and weigh to determine the water adsorbed at relative humidity of 45 percent.

5.8 Replace the tray containing the potassium carbonate with a tray of similar size containing sodium sulfate, using a sufficient quantity to maintain a relative humidity of 95 percent in the cabinet. Repeat steps 5.5 and 5.6.

6. Calculations

6.1 Calculate the adsorptions from the following terms:

A = Weight of oven dry sample, g

B = Weight of sample at equilibrium in 45 % R. H., g

C = Weight of sample at equilibrium in 95 % R. H., g

6.1.1 Adsorption, % at 45 % R. H. = 100(B-A)/A

6.1.2 Adsorption, % at 95 % R. H. = 100(C-A)/A

7. Report

7.1 Incorporate the adsorption values in the Petrographic Analysis report described in MTM 104 or include on a laboratory test report.

MICHIGAN TEST METHOD
FOR
SAMPLING AGGREGATES

1. Scope

1.1 This method covers procedures for obtaining aggregate samples for physical property evaluation and for acceptance testing.

2. Applicable Documents

2.1 MDOT Procedures for Aggregate Inspection

2.2 *Michigan Test Methods*:

MTM 113 Selection and Preparation of Coarse Aggregate Samples for Freeze-Thaw Testing

MTM 119 Sampling Open-Graded Drainage Course (OGDC) Compacted in Place

2.3 AASHTO T96 Resistance to Degradation of Small-Size Coarse Aggregate by Abrasion and Impact in the Los Angeles Machine

3. Significance and Use

3.1 Sampling is equally as important as the testing, and the sampler shall use every precaution to obtain samples that will show the nature and condition of the materials which they represent.

4. Equipment

4.1 *Obtain the following tools prior to sampling*:

- Square nosed shovel
- Square nosed scoop
- Sample thief - 1.25 inches (30 mm) to 1.5 inches (40 mm) diameter thin wall conduit approximately 30 inches (750 mm) long.
- Bucket auger
- Template(s) - Conforming to the shape of the conveyor belts to be sampled
- Sample container or containers capable of holding approximately 50 pounds (25 kg).
- All necessary personal safety equipment required by MDOT Bureau of Highways Personal Protective Equipment Policy, OSHA and MIOSHA for construction sites and MSHA requirements for mining operations.

5. Sampling

5.1 *General* - Where practical, samples to be tested for quality shall be obtained from the finished product. The inspector shall notify the person in charge upon arrival at the sample location. The company representative shall make the necessary arrangements to assist the inspector in obtaining a sample. The company representative should be encouraged to accompany the inspector to the site where the sample is to be obtained.

5.2 *Visual Inspection* - Before sampling, the methods used to build the stockpile and the loader operator's load out procedures should be noted because they determine the sample pattern. Look around the stockpile, making careful note of the size and distribution of the aggregate particles. When more than fifty percent of the aggregate pieces, within a randomly selected five lineal foot section of the loading or stockpile face appear to be of the same size, that face shall be considered segregated. If the material is determined to be segregated, the "Mini" Stockpile Method (Section 5.4.1.2) of sampling shall be used.

5.3 *Los Angeles Abrasion Samples* - Samples from the finished product to be tested for abrasion loss shall not be subject to further crushing or manual reduction in particle size in preparation for the abrasion test unless the size of the finished product is larger than the maximum size allowed to be tested using ASHTO T96.

5.4 Stockpile Sampling

5.4.1 *Sampling from Radial Stacker or Fixed Stacker Built Stockpiles* - There are four approved methods for obtaining representative samples from these stockpiles.

5.4.1.1 *Back Blading Method* - This method may be used if it is necessary to acquire a sample after the stockpile has been built, but prior to shipping. The front-end loader operator back blades the surface of the stockpile at each location until the pile's upper portion can be blended with the materials previously pulled down by the back blading process. Several different locations from the side farthest away from the stacker around to the side closest are prepared in this manner. Each location is then sampled with a squared nosed shovel or square nosed scoop and sample container by digging into the pile about one foot and then bringing the shovel up the vertical face, obtaining one sample increment. This procedure is repeated at several randomly selected sites until a field sample is obtained whose mass equals or exceeds the amount stated in section 5.4. Field samples procured in this manner tend to be coarser than those obtained from the shipping face.

5.4.1.2 *"Mini" Stockpile Method* - This is the preferred method for obtaining a field sample from any type of stockpile. This method provides the highest probability of getting a representative sample. The front end loader operator takes several scoops of aggregate across the stockpile's shipping face. These are placed in a small pile separated from the main stockpile. This material is then thoroughly mixed. When the mixing is done, the operator back blades the

"mini" stockpile, exposing more of the material. Randomly select at least six sample sites to make up the composite field sample. At the first site, dig about one foot into the "mini" stockpile and bring the shovel or square-nosed scoop up the vertical face, acquiring a shovel or scoop full of aggregate. If the aggregate exposed in the hole appears uniform, the inspector may elect to finish acquiring the field sample by shoving the sampling tool into the pile and removing one portion. This process is repeated until a composite sample of at least 50 pounds (25 kg) is obtained. If the sample is from a new shipping face, the aggregate may be coarser than material from deeper in the stockpile and it would be a good idea to re-sample after a few loads of aggregate have been shipped.

5.4.1.3 *Modified "Mini" Stockpile Method* - This method may also be used if it is necessary to obtain a sample after the stockpile has been built, but prior to shipping. The front end loader operator sets aside the first bucket full of aggregate from at least three locations, beginning with the side farthest from the stacker to the side closest. The operator goes back to each original sample site and obtains a second bucket full of aggregate. This material is placed in a small separate pile which is thoroughly mixed and back bladed to expose more of the aggregate prior to sampling. At least six random sites are selected from this small pile for sampling. Dig approximately one foot into the "mini" stockpile and bring the shovel or scoop up the vertical face obtaining one sample increment. After the first sample site has been prepared, and the aggregate exposed in the hole appears uniform, the inspector may opt to finish obtaining the composite field sample by simply pushing the shovel or scoop into the "mini" stockpile and extracting a sample increment. A composite field sample of at least the quantity stated in section 6.1 should be acquired.

5.4.1.4 *Hand Sampling* - If it is safe to scale the stockpile's shipping face, and there is no power equipment available, a sample may be obtained by hand, using a square nosed shovel or squared nosed scoop and a sample container capable of holding at least the quantity of aggregate stated in section 6.1. At least six sample sites are selected so that they are distributed over the shipping face in proportion to the volume of materials in the top, middle and bottom thirds of the stockpile. For example, approximately 11 percent of the stockpile volume is in the top third, 33 percent of the volume of the stockpile is in the middle third and 56 percent in the bottom third. Therefore, 11 percent of the sample sites should be located in the top third of the shipping face, 33 percent in the middle third and 56 percent from the bottom third. At each sample site, dig into the stockpile about one foot. Bring the square-nosed shovel or scoop up the vertical face. If the aggregate is very loose, it will not be possible to develop a vertical face. When this occurs, push the shovel or scoop into the stockpile as far as possible and lift the sampling tool upward, obtaining one sample increment.

5.4.2. *Sampling from Truck Dump, Front End Loader, and Dumpster Built Stockpiles* - There are four approved methods for acquiring representative field samples from these stockpiles.

5.4.2.1 *Hand Sampling During Stockpile Construction* - During the construction of the stockpile, a composite field sample may be obtained by hand using a square nosed shovel or square nosed scoop. Randomly choose at least five individual aggregate dumps. Select a sample site from each dump. These sites should be located on the front, right side, back, left side, and top of the randomly chosen individual aggregate dumps. Dig into each pile about one foot, forming a vertical face to remove the segregated or dried surface material. The shovel or scoop is brought up the entire vertical face. Whenever dumps are placed so closely that portions of samples may not be obtained from the front, sides, and back of the piles, the inspector should wait until these are bladed flat.

5.4.2.2 *Modified Channel Sample* - The stockpile will be bladed flat after each layer is completed. A modified channel sample is procured from at least six sites by traversing diagonally across the full width and trend of all the dumps. At each site, dig down approximately one foot and form a vertical face. Bring the shovel or scoop up the vertical face, obtaining one sample increment. The final field sample should always equal or exceed the mass stated in section 6.1.

5.4.2.3 *Shipping Face Samples* - Use the "Mini" Stockpile Method as described in section 5.4.1.2, except in the case of large stockpiles, the representative sample may be obtained from the area equal to that required to fill one truck.

5.4.2.4 *Hand Sampling of Shipping Face* - If it safe to approach the shipping face of the stockpile, a hand sample may be procured. Randomly select at least six sample sites. Some of these sites may be located in the sluff at the base of the stockpile. To sample the sluff, dig down approximately one foot to form a vertical face. Bring the shovel or scoop up the vertical face. To sample the main portion of the vertical shipping face, shave or scrape the pile's surface until approximately three shovels full of material is scraped loose. One shovel or scoop full is then scooped up and placed in the sample container.

5.4.3 *Sampling from a Bottom Dump or Pan Built Stockpile* - There are four approved ways to procure a representative field sample from this type of stockpile.

5.4.3.1 *Modified Channel Sample* - The field sample will consist of at least six sample locations randomly distributed diagonally across the full length and width of the stockpile. Each sample increment will be obtained as described in section 5.4.2.2.

5.4.3.2 *Bucket Auger Method* - The sample sites are distributed the same as the modified channel method. However, more individual sample sites will normally be required to obtain the quantity of material stated in section 6.1, due to the smaller capacity of the bucket auger.

5.4.3.3 *Shipping Face Samples* - Use the "Mini" Stockpile Method as described in section 5.4.1.2, except in the case of large stockpiles, the representative field sample may be obtained from the area required to fill one truck.

5.4.3.4 *Hand Sampling of Shipping Face* - Use the hand sample method described in 5.4.2.4 to procure the field sample.

5.5 *Stockpile Sampling of Fine Aggregate* - The following ways to get a representative field sample are used regardless of the stockpiling method.

5.5.1 *Sample Thief* - A sample thief can only be used to sample fine aggregate. A composite sample of 25 to 30 randomly selected locations is procured by moving up and down and across the shipping face of the stockpile while pushing the thief into the fine aggregate. The entrapped material is emptied into the sample container. If the surface of the stockpile has dried, the dry material should be removed before inserting the sample thief. The field sample should equal or exceed the mass stated in Section 6.

5.5.2 *Sample Scoop* - Remove the dry surface material plus some of the damp material to form a vertical face. Bring the scoop up the vertical face. Repeat this process in at least six randomly selected locations across the face of the stockpile, until the quantity stated in Section 6.1 is obtained.

5.5.3 "*Mini" Stockpile* - It is permissible to build a "mini" stockpile and sample it as described in Section 5.4.1.2.

5.6 *Conveyor Belt Sampling* - There are four ways to obtain a representative field sample from a conveyor belt.

5.6.1 *Sampling Directly from a Conveyor Belt* - Obtain a least three approximately equal increments, selected at random, from the conveyor belt and combine to form a field sample whose mass equals or exceeds the minimum recommended in paragraph 6.1. Stop the conveyor belt for sampling. A template conforming to the shape of the belt should be used if the aggregate will roll down the belt. Press the template completely through the aggregate on the belt. The material immediately below the template is gathered and placed in the sample container. Move the template approximately one foot down the belt. After pressing the template through the aggregate, remove the material immediately above it. After sampling, the amount of fines remaining on the belt's surface should be about the same as the material clinging to the underside of the belt.

5.6.2 *Sampling the Flowing Aggregate Stream* - The use of a specially constructed sample pan to catch the aggregate is required to safely obtain a sample. Pass

the sample pan through the entire aggregate stream where one belt discharges onto another or into a hopper. At least three randomly selected, approximately equal weight, sample increments are combined to form the field sample whose mass shall equal or exceed the quantity stated in section 6.1. In addition, conveyor belts may be equipped with commercially available automatic sampling devices.

5.6.3 *Slinger Belt Sampling* - Some HMA plants are equipped with a slinger belt at the inlet to the drum mixer. This belt can be reversed and discharge material into a container, such as a wheelbarrow. Place the wheelbarrow underneath the slinger belt. Step away from the wheelbarrow. Signal the HMA plant operator to discharge the aggregate. Enough material should be discharged to form a field sample of the proper size.

5.6.4 *Front End Loader Sampling* - If it is possible to position the bucket of a front end loader into the aggregate stream where it is discharged from one belt to another or into a bin, this method may be used. Position the bucket under the aggregate stream so that all the material being discharged is caught. When the bucket is full, but not overflowing, remove the bucket. Empty the bucket away from the stockpile and using a squared nosed shovel, proceed to sample the material as if it were a "mini" stockpile. At least six sample sites are required to form a field sample.

5.7 *Hauling Units* - Hauling units consist of rail cars, trucks, and barges. There are two ways to sample from a hauling unit.

5.7.1 *Inside the Hauling Unit* - Randomly select at least six sites, or one site in each of the following quadrants - front half, back half, right side, left side and middle - for building the composite field sample. Dig down about one foot at each location. Bring the shovel or scoop up the vertical face, collecting one sample increment. Sampling coarse and open-graded aggregates from inside hauling units may produce test results with coarser gradations than samples obtained at the aggregate source.

5.7.2 *After Unloading of Hauling Unit* - Randomly select a hauling unit for sampling. Have the unit discharge its aggregate load separate from any other aggregate loads. Sample the individual dump as if it was a "mini" stockpile, provided at least one sample increment is located in each of the following quadrants - front, back, right side, left side and middle. Another option would be to sample six different loads after they were discharged, using the same distribution of sample locations as stated earlier.

5.8 *Job Site Sampling* - Sampling from the job site can consist of either sampling from a temporary stockpile or in place on the grade.

5.8.1 *Temporary Stockpiles* - Usually this stockpile will be a truck dump stockpile. However, the type of stockpile should be observed prior to sampling. Follow the stated sampling procedure in 5.4 or 5.5 for the type of stockpile encountered.

5.8.2 *On the Grade Sampling* - When aggregate is delivered to the job site, it is either dumped directly on the grade and then spread out by a road grader, or it is dumped from the trucks into a spreader. For certain aggregate classes, particularly 21AA, the act of spreading generates segregation. This must be accounted for when sampling. If the aggregate has been placed on the grade, Michigan Test Method 119 may be used to obtain the field sample. If a geotextile fabric separator is used, be careful not to puncture the fabric.

6. Field Sample Size

6.1 The field sample mass, which is predicated on the type and number of tests to which the material is to be subjected, shall be as follows:

6.1.1 Fine aggregates and Granular Material Class IIIA for independent assurance or acceptance tests	25 pounds (11 kg) minimum
6.1.2 Coarse, Dense Graded, Open Graded aggregates and Granular Materials (except Class IIIA) for independent assurance or acceptance tests	50 pounds (25 kg) minimum (one full bag)
6.1.3 Aggregates for abrasion tests (As produced)	100 pounds (50 kg) minimum (two full bags)
6.1.4 Aggregates for mix design	50 pounds (25 kg) minimum (one full bag)
6.1.5 For both abrasion and mix design	100 pounds (50 kg) minimum (two full bags)
6.1.6 Aggregates for freeze thaw tests	See Michigan Test Method 113
6.1.7 Aggregates for wear track tests	
(Material passing 3/8 in (9.5 mm) sieve and retained on No. 4 (4.75 mm) sieve)	50 pounds (25 kg) minimum (one full bag)
(Material not pre-screened)	100 pounds (50 kg) minimum (two full bags)

MICHIGAN TEST METHOD
FOR
MATERIALS FINER THAN No. 200 (75-μm) SIEVE
IN MINERAL AGGREGATES BY WASHING

1. Scope

1.1 This test method covers determination of the amount of unbound material finer than a No. 200 (75μm) sieve in aggregates by washing.

1.2 Except as described herein, the testing will be in conformance with ASTM C 117. Procedure A of ASTM C 117 will be followed for all aggregates except crushed concrete and those which are sampled after passing through a HMA plant dryer, or extracted from a HMA mixture. Procedure B of ASTM C 117 will be followed when testing crushed concrete. Loss by Washing of extracted HMA aggregates will follow ASTM C 117, Procedure B, and applicable HMA Michigan Test Methods. This modification of ASTM C 117 provides a method for mechanical washing of aggregates and the substitution of open stoves or microwave ovens for conventional ovens, and minimum test sample weights.

1.2.1 The use of a mechanical washer to perform the washing operation is not precluded, provided the results are consistent with those obtained using manual operations.

NOTE: If Loss by Wash results using a mechanical washer are either just within specification or on the low side or out of specification on the high side, a hand wash should be conducted on the other half of the saved final sample split.

1.3 The paragraph numbering conforms to the numbering in ASTM C 117. Only those sections containing modifications are printed in this MTM.

5. Apparatus

5.4 Drying Device - A conventional oven of appropriate size capable of maintaining a minimum temperature of 220 °F (105 °C), a microwave oven, or a gas or electric stove, or hot plate.

5.6 Mechanical Washer - A mechanical washer with a rotating container of sufficient capacity to hold the largest size sample required which permits flushing with water without loss of any part of the sample or water except that portion directed through a No. 200 (75μm) sieve.

6. Sampling

6.2 Coarse, dense-graded, open-graded and granular material field samples may be reduced to testing size using a sample splitter or the quartering method. Damp-fine aggregate field samples may be reduced to testing size using the quartering or miniature stockpile methods. Dry fine aggregate samples will be reduced using a sample splitter. The minimum weight of the test sample will be the same as the weights used for sieve analysis, as listed in 4.2, 4.3 and 4.4 of Michigan Test Method 109.

8. Procedure

8.1 The completeness of drying when using a stove, microwave oven or hot plate may be determined by placing a slip of paper on the sample. Curling of the paper indicates the

presence of moisture. Drying is to be continued until the paper placed on the sample remains flat. Using the curling of a piece of paper is not reliable for some aggregates with large stones such as coarse and open-graded limestone, slags and crushed concrete. Drying to constant weight is recommended for these aggregates. When using a gas or electric stove, hot plate or microwave oven, the temperature of the aggregate particles will not exceed 400 °F. (Some particles will degrade or may fracture due to steam pressure developed if the aggregate is dried at too high a temperature). Weigh the sample after drying to the nearest gram.

8.3 After drying and determining the mass, place the test sample in the container and add sufficient water to cover it. Agitate the sample with just enough vigor to result in complete separation of the unbound particles finer than the No. 200 (75 tm) sieve from the coarser particles, and to bring the fine material into suspension. Particles composed of material finer than the No. 200 (75 tm) sieves that do not degrade during the normal agitation of the wash will be considered aggregate. Immediately pour the wash water containing the suspended and dissolved solids over the nested sieves, arranged with the coarser sieve on top. Take care to avoid, as much as feasible, the decantation of coarser particles of the sample.

8.4 Add a second charge of water to the sample in the container, agitate, and decant as before. Repeat this operation until the wash water is clear. The wash water is considered clear if the suspended sediment settles to the bottom in approximately ten (10) seconds.

8.5 Carefully wash the fine material retained on the No. 200 (75 tm) sieve to ensure all particles have had a chance to pass through the sieve. Return all material retained on the nested sieves by flushing back to the washed sample. Dry the washed aggregate to constant mass. Determine the mass to the nearest gram.

8.6 ASTM C 117 does not adequately consider the fact that some aggregates are degraded by the action of the mechanical washer. Place the test specimen in the tilted container, start the wash water, and rotate the container. After a predetermined time, turn off the motor and wash water[3]. The mechanical washing operation is complete if the suspended sediment settles to the bottom in approximately ten (10) seconds. Continue washing if the water is still cloudy. If no improvement in water clarity is observed after additional wash time, stop the mechanical wash process. Excessive mechanical wash time may result in increased Loss by Wash values. All wash water discharged from the tilted container must pass through the No. 200 (75tm) sieve.

8.7 Upon completion of washing, the rotating container is tilted downward to discharge the test specimen into a pan. The container is flushed with water to remove any remaining material. Discharge excess water from the pan through the No. 200 (75 tm) sieve. Add sufficient water to cover the sample and agitate to bring any fines into suspension. If the suspended sediment settles to the bottom in approximately 10 seconds, the wash will be considered complete. Carefully wash the fine material retained on the No. 200 (75 tm) sieve to ensure all particles have had a chance to pass through the sieve. Return all materials retained on the No. 200 (75 tm) sieve by rinsing it back into the washed specimen. Dry the washed aggregate as noted in 8.1 above and weigh to the nearest gram.

---

3 The predetermined time will be less for coarse, open-graded and fine aggregates compared to dense-graded aggregates.

10. Calculation

10.1 Calculate the amount of material lost by washing finer than No. 200 (75 μm) sieve as described in 10.1 of ASTM C 117.

11. Report

11.1 Report the loss by washing to the nearest 0.1 percent for fine, coarse and open-graded aggregates, and to the nearest whole number for dense-graded aggregates and granular materials.

MICHIGAN TEST METHOD
FOR
SIEVE ANALYSIS OF
FINE, COARSE, DENSE GRADED, OPEN GRADED AND GRANULAR MATERIAL AGGREGATE IN THE FIELD

1. Scope

6.2 This method covers the determination of the particle size distribution of fine, coarse, dense graded, open graded and granular material aggregates by sieving.

1.2 Except as described herein, the testing will be in conformance with ASTM C 136. This modification of C 136, for use in the field or district laboratory, specifies the minimum test sample weights for acceptance and independent assurance testing, the specified method of sieve agitation and drying methods. It also deletes the requirement of separation of coarse and fine aggregates in dense graded and granular material aggregates prior to sieving.

2. Applicable Documents

2.1 *ASTM Standards*:
C 136 Sieve Analysis of Fine and Coarse Aggregates
C 125 Standard Terminology Relating to Concrete and Concrete Aggregates

2.2 *Michigan Test Methods*:
MTM 108 Materials Finer than No. 200 (75 µm) Sieve in Mineral Aggregates by Washing

3. Apparatus

3.1 Drying devices - A conventional oven of appropriate size capable of maintaining a minimum temperature of 220 F (105 C), a microwave oven, a gas or electric stove or hot plate.

4. Test Sample

4.1 Coarse, Dense Graded, Open Graded and Granular Material aggregate field samples may be reduced to testing size using a sample splitter or the quartering method. Damp fine aggregate field samples may be reduced to testing size using the quartering or miniature stockpile methods. Dry fine aggregate samples will be reduced using a sample splitter.

4.2 Fine Aggregate and Granular Material IIIA test samples will weigh, after drying, between 500 and 700 g.

4.3 The weight of Granular Material class II, IIA and III test samples will be determined by the actual nominal maximum size. The actual nominal size is ascertained by reducing the aggregate sample to a minimum initial damp weight of 5000 g. The material is passed through all the sieves from the specification maximum down to the No. 4 (4.75 mm). If more than 10 percent of the initial sample weight is retained on any sieve greater than the No.4 (4.75 mm), the nominal size will be the largest sieve on which10 percent of the material is retained. Use this sieve size to determine the sample weight from the table in paragraph 4.4. However, note in the remarks if a single rock larger than two inches is found in the sample and do not use the single rock to determine the sample=s nominal

maximum size.

4.4 Coarse, Dense Graded, Open Graded Aggregates and Granular Material test sample weights will conform to the following:

Nominal Maximum Size, Square Openings	Minimum Weight of Test Sample, g.
No. 4 (4.75mm)	500
3/8 inch (9.5 mm)	1,000
2 inch (12.5 mm)	2,000
3/4 inch (19.0 mm)	2,500
1inch (25.0 mm)	3,500
1 2 inch (37.5 mm)	5,000

*The nominal maximum size of aggregate is the largest sieve size listed in the applicable specification upon which any material is permitted to be retained.

4.5 In the case of mixtures of fine and coarse aggregates (Dense-Graded Aggregates and/or Granular Materials), the fine and coarse aggregates will not be separated on the No. 4 (4.75 mm) sieve for the sieve analysis.

5. Procedure

5.1 The completeness of drying when using a stove with an open flame or microwave oven will be determined by placing a slip of paper on the sample. Curling of the paper indicates the presence of moisture. Drying is to be continued until the paper placed on the sample remains flat. Temperatures used for drying will not be so high as to cause degradation of the particles. (Some particles may fracture due to steam pressure developed if the aggregate is dried at too high a temperature.) Weigh the sample after drying to the nearest one gram.

5.2 Continue sieving for a sufficient period of time and in such manner that, after completion, not more than 1 percent by weight of the residue on any individual sieve will pass that sieve during one minute of continuous hand sieving. The method of agitating the sieve is not specified, but should include both vertical and lateral motion.

5.3 The determination of the material finer than the No. 200 (75 µm) sieve is done according to Michigan Test Method 108 for coarse and fine aggregates. Fine aggregate sieve analysis is completed using dry washed material and all sieves specified for the gradation. Coarse aggregate sieve analysis may be completed on aggregates which have not been washed and dried. However, the sieve analysis on coarse aggregate independent assurance samples must always be done on washed and dried material.

6. Report

6.1 The report will include the total percentage of material passing each sieve. The percentages will be reported to the nearest whole number, except that the percentages passing the No. 200 (75 µm) sieve (Loss by Washing) for coarse, fine, open-graded and aggregates for HMA mixtures will be reported to the nearest tenth of a percent.

MICHIGAN TEST METHOD
FOR DETERMINING
DELETERIOUS AND OBJECTIONABLE PARTICLES IN AGGREGATE

1. Scope

1.1 This method covers procedures for the identification of deleterious and objectionable particles in coarse aggregates for Portland cement concrete and HMA mixtures, and in the coarse fraction of dense-graded aggregates used in HMA mixtures. Special procedures are included for use when the aggregate has been produced by crushing Portland cement concrete.

1.2 Only the type of deleterious or objectionable particles for which there are limiting values in the specifications, for the series and class of aggregate being tested, should be determined on a given sample of material.

2. Referenced Documents

2.1 MDOT Standards:

Standard Specifications for Construction

2.2 ASTM Standard:

E 11 Specification for Wire Cloth Sieves for Testing Purposes

3. Terminology

3.1 *Crushed Concrete Aggregates* - Aggregate produced by crushing salvaged Portland cement concrete.

3.2 *Deleterious Particles* - Aggregate particles which are non-durable in freezing and thawing, and are detrimental to the quality of the product in which they are used.

3.3 *Objectionable Particles* - Aggregate particles which are detrimental to the quality of the product in which they are used, but for reasons other than weathering.

3.4 *Soft Particles* - As defined in the Standard Specifications, includes shale, siltstone, friable sandstone, ochre, coal, clay-ironstone, and particles which are structurally weak or are found to be non-durable in service.

3.5 *Structurally Weak Particle* - A rock particle that can be broken or crumbled with the fingers of one hand.

0. Apparatus and Supplies

4.1 *Balance* - A weighing device with a capacity sufficient for the largest sample to be weighed (5 kilogram for field testing), accurate and readable to 1 gram.

4.2 *Sieves* - Conforming to ASTM E 11, and including at least the 3/8 inch (9.5 mm) and No. 4 (4.75 mm) sieves and sieve pan.

4.3 *Sample Pans* - Of sufficient size to hold the sample to be tested (5000 gram maximum for field testing).

4.4 *Rat Tail File* - Approximately 1/4 inches (6 mm) in diameter for separating and scratch testing deleterious and objectionable particles from the sample.

4.5 *Water Bottle* - With a squirt or spray nozzle attachment.

5. Sample

5.1 The sample for this test is a portion of the aggregate sample used for the sieve analysis, MTM 109. Save and combine material retained on all sieves down to and including -

No. 4 (4.75 mm) sieve for:
a. Open Graded Aggregates
b. 26A
c. Aggregates for HMA Mixtures

3/8 inch (9.5 mm) sieve for:
a. Coarse Aggregates for Portland Cement Concrete (except 26A)
b. Dense Graded Aggregates (except for HMA mixtures)

NOTE: Remember to include this sieve when testing for gradation. It may not be required for the sieve analysis.

6. Procedure

6.1 Calculate the sum of the weights retained on all sieves down to and including the sieve listed in 5.1. This is the test sample weight.

6.2 Use water to wet the surface of the particles to be examined, and maintain them in a surface wet condition with a light spray as necessary, except when the only particles to be picked are those with HMA coating.

6.3 Pick from the sample those types of deleterious or objectionable particles that are restricted by the specification applicable to the sample being tested. Descriptions of the particles are given in Section 7. Place each type of deleterious or objectionable particles in a separate pile for later weighing. If the specification limitations is for a grouping of several types (example: soft particles), all types in the group may be placed in a common pile. Clay-ironstone has a separate specification limit from the soft particle requirement.

NOTE: The picking may be performed most expeditiously by using the file to separate a few particles from the sample pile, quickly examining them and removing the deleterious and/or objectionable particles, then pushing the acceptable particles into a container placed under the edge of the examining surface. Some particles may require

rolling or picking up to view all surfaces or to otherwise test the particles for identification.

6.3.1 For crushed concrete aggregates, determine by estimation if the deleterious or objectionable material is more or less than 50 percent of the volume of the particle. This may occur when mortar adheres to a deleterious particle, or HMA material coats a particle. Place in separate piles those particles with greater than 50 percent and those with less than 50 percent of the particular deleterious or objectionable material. If the deleterious or objectionable material is of a size that would pass a No. 4 (4.75 mm) sieve, do not classify the particle as deleterious or objectionable.

6.3.2 For all aggregates, if the deleterious or objectionable material is 50 percent or more of the volume of the particle that entire particle is to be considered deleterious. If the deleterious or objectionable material is less than 50 percent of the volume of the particle the particle is not considered deleterious.

6.4 Weigh each of the different piles of deleterious and/or objectionable material, and record on the worksheet.

7. <u>Descriptions of Deleterious and Objectionable Particles</u>

7.1 *HMA Particles* - In crushed concrete aggregate, particles of aggregate with partial or complete coating of asphalt (bitumen), or particles of HMA mortar (asphalt and sand) resulting from incomplete removal of HMA patches or surfacing prior to salvaging the concrete. For coated particles, do not consider them as objectionable particles, if the bitumen is a thin coating covering less than one-third of the surface.

7.2 *Chert Particles* - Chert is present in many aggregate sources in a variety of colors, varying in appearance from a dull to vitreous (glassy) luster and ranging in porosity from porous to dense. All varieties are very hard, except chalky chert. Scratching these particles with a knife or file leaves a gray mark on the chert particle. Chert particles will scratch glass. All aggregate particles that contain any chert are considered all chert. Chert particles appear as follows:

7.2.1 *White to Light Gray* - These particles are light colored, porous, dull and in general are of low specific gravity.

7.2.2 *Mottled* - These particles are of mottled coloration, are generally porous and dull.

7.2.3 *Vitreous (Glassy) Lustered and Medium Gray to Black* - These particles vary from vitreous (glassy) to sub-vitreous lustered, are dense and generally are of higher specific gravity and generally are of darker colors.

7.3 *Clay Ironstones* - These particles are siderite concretions which are derived from various shale formations. These particles are present in produced aggregates in the following four forms

7.3.1 *Shells* - These particles are the relatively thin exterior portion of the siderite concretions. They are generally smooth on the exterior and rough on the interior. The thicker particles often display a laminated structure. The particles are soft, porous, and are yellowish brown to dark brown in color.

7.3.2 *Centers* - These particles are the irregularly shaped central portion of some siderite concretions. Some surfaces are hard while others exhibit a thin, soft, clay type surface over a hard, dense center. These particles are generally buff to brown on the surface with a dark gray colored interior.

7.3.3 *Fossiliferous* - These particles are generally dark brown, soft, porous and contain traces of fossil shells to particles composed almost entirely of shell fragments.

7.3.4 *Massive* - These particles are dark brown, soft, porous and are generally structureless or may be very finely laminated.

7.4 *Coal* - Coal particles are black in color, have dull to shiny surfaces, are moderately soft, brittle, and may have a laminated structure.

7.5 *Friable Sandstone* - These particles are sandstones from which individual sand grains may be easily abraded by rubbing the particle between the thumb and finger.

7.6 *Non-Durable in Service* - This category is for those particles not listed elsewhere in this section which may be found to be non-durable in service. This category shall be used only for specific types of particles when directed by the Construction and Technology Division.

7.7 *Ochre* - These particles are earthy in texture, extremely soft, porous, vary from yellowish to brown and red, often disintegrate when wet, and leave distinct color streaks on hands.

7.8 *Shale* - Shale particles generally vary from dark brown to black, are very soft, laminated, and have an earthy texture.

7.9 *Siltstone* - These particles consist of cemented silt and range in color from whitish to yellowish-brown, are soft, porous, and have a powdery feel when dry and a slippery feel when wet.

7.10 *Structurally Weak* - These particles include those not fitting the descriptions elsewhere in this section but which may be readily broken apart by hand and those particles which are severely weathered.

8. Calculations

8.1 Except as described in 8.2, determine the percentage of each type, or combinations of types, of deleterious or objectionable material by the following formula:

$$P = \frac{100 \times W}{S}$$

Where:

P = Deleterious or objectionable material in the sample, %
W = Weight, g, of deleterious or objectionable particles as determined in 6.4
S = Weight, g, of the sample as determined in 6.1

8.2 In the case of crushed concrete aggregate where the deleterious or objectionable material is separated in portions with particles having more or less than 50% deleterious or objectionable material, calculate the percentage of each type by the following formula:

$$P = \frac{100 \times W_1 + 0.5\ W_2}{S}$$

Where:

P = Reported percentage of deleterious or objectionable material in the sample, %
W_1 = Weight, g, of particles having more than 50% deleterious or objectionable material
W_2 = Weight, g, of particles having less than 50% deleterious or objectionable material
S = Weight, g, of sample from which deleterious or objectionable particles were picked, as determined in 6.1

9. Report

9.1 Report the percentage of each type, or combinations of types of particles, which are indicated by the specification as deleterious or objectionable. Report the results to the nearest 0.1 percent.

MICHIGAN TEST METHOD
FOR
DETERMINING AN AGGREGATE WEAR INDEX (AWI)
BY WEAR TRACK POLISHING TESTS

1. Scope

1.1 This method covers the determination of an Aggregate Wear Index (AWI) for aggregates or blends of aggregates proposed to be used in HMA wearing course mixtures.

1.2 The AWI determined by this method is the result of wear track polishing tests conducted on the exposed aggregate or blend of aggregates cast into test slabs. The AWI represents the average initial peak force measurement determined on duplicate test slabs after four million wheel passes of wear track polishing. Only material finer than the 3/8 inch (9.5 mm) sieve and coarser than the No. 4 (4.75 mm) sieve is to be used in the wear track tests for aggregates to be used in HMA wearing course mixtures. Sizes of aggregates may be adjusted for special investigations or research projects.

2. Referenced Documents

2.1 *ASTM Standards*:

C 136 Test for Sieve Analysis of Fine and Coarse Aggregates

E 29 Standard Recommended Practice for Indicating Which Places of Figures are to be Considered Significant in Specific Limiting Values

2.2 MDOT Research Reports:

Research Report R-1098	MDOT Circular Wear Track-Results of Preliminary Aggregate Polishing Tests

3. Significance and Use

3.1 Aggregates that are readily traffic-polished have been shown to contribute to the wet-road slipperiness of HMA pavements. Aggregate Wear Index ratings are used in conjunction with traffic count data to develop HMA top course mixtures that will resist the anticipated amount of traffic polishing for the design life of pavements.

3.2 AWI determinations by wear track testing are conducted on quarried carbonates, slags and other aggregates that cannot be analyzed by MTM 112, Test Method for Determining an Aggregate Wear Index (AWI) From Sample Petrographic Composition and Wear Track AWI Factors.

4. Apparatus and Supplies

4.1 Double mold and vibratory table for casting test slabs (Figure 1).

4.2 Concrete mixer and assorted tools for casting of test slabs.

4.3 Medium-etch concrete retarding agent for coating the molds to produce an exposed-aggregate surface.

.

4.4 Sand, oven-dry and graded to Michigan Aggregate No. 2NS with material coarser than the No. 4 (4.75 mm) sieve removed.

4.5 Portland cement, Type I.

4.6 Molds and vibratory table for casting wear track test slabs, (Figure 1).

4.7 Circular Wear Track Assembly, (Figure 2).

4.8 Static Friction Tester with a load sensor calibrated to detect force impulses up a maximum of 1000 lbf, and a recording oscillograph or other device with sensitivity and range to record the friction test measurements, (Figure 3).

5. Samples

5.1 A minimum quantity of 60 pounds of aggregate from produced stock from each source to be evaluated shall be submitted for tests.

5.2 Wash each sample, then sieve according to ASTM C 136, using the 3/8 inch (9.5 mm) and No. 4 (4.75 mm) sieves.

5.3 Cast duplicate test slabs for each sample, using the sample material finer than the 3/8 inch (9.5 mm) sieve and coarser than the No. 4 (4.75 mm) sieve, following the detailed procedure outlined in MDOT Research Report R-1098.

6. Procedure

6.1 Test the prepared test slabs, after curing, on the static friction tester to obtain initial friction values.

6.2 Place a complete set of 16 test slabs on the wear track, and polish for increments of 500,000 wheel passes, with friction testing on the static tester at the end of each increment, through four million wheel passes, as described in MDOT Research Report R-1098.

7. Calculations

7.1 Determine the Aggregate Wear Index (AWI) for each aggregate sample by plotting the average friction values versus wheel passes at the 1.5 million through 4.0 million wheel pass increments. Report the least-square best fit friction value for each sample at 4.0 million wheel passes as the sample AWI.

7.1.1 Computations shall be made according to the rounding off procedure described in ASTM E 29.

8. Report

8.1 Include the AWI values determined for the submitted aggregates in standard test reports. Wear track AWI values are also to be entered into the MDOT Aggregate Source AWI Summary.

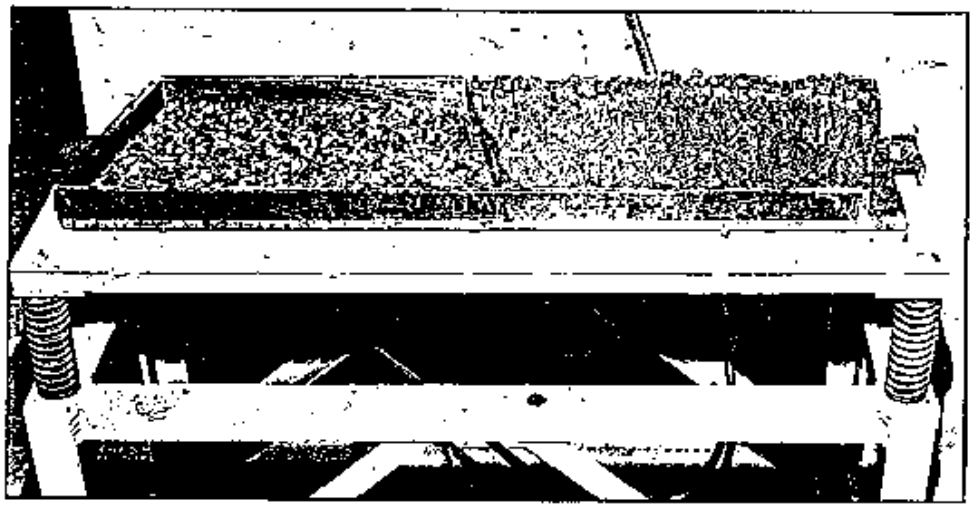

Figure 1. Vibratory table and test slab molds.

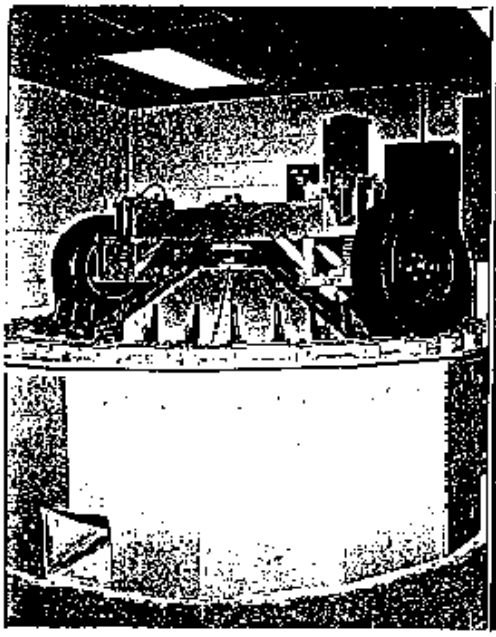

Figure 2. MDOT wear track.

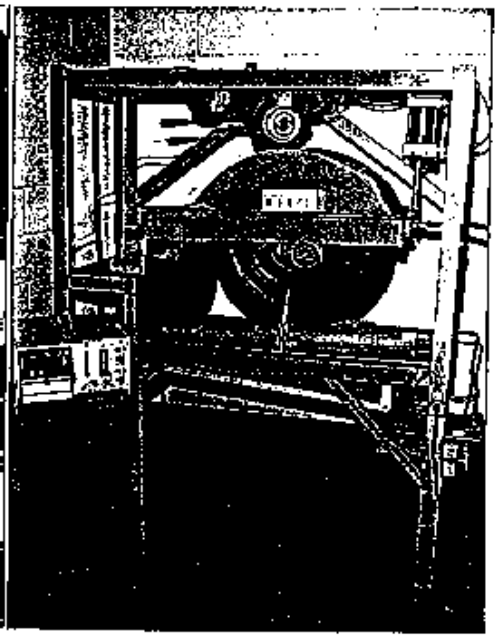

Figure 3. MDOT static friction tester.

MICHIGAN TEST METHOD
FOR
DETERMINING AN AGGREGATE WEAR INDEX (AWI)
FROM SAMPLE PETROGRAPHIC COMPOSITION
AND WEAR TRACK AWI FACTORS

1. Scope

1.1 This method covers the determination of an Aggregate Wear Index (AWI) for gravel aggregates or blends of aggregates proposed to be used in HMA wearing course mixtures.

1.2 The AWI determined by this method is computed from the petrographic composition of the aggregate sample and reference AWI factors established for rock types contained in Michigan glacial gravels. The reference AWI factors were determined on 100 percent crushed particles.

1.3 The final computed AWI is based upon a grading-weighted summation of the calculated AWI values for the rock type categories present in the sample. In the case of blended aggregates, the AWI of the composite material is determined from the grading-weighted AWI of each aggregate and the given blend ratio.

1.4 The final computed AWI of the sample is reduced by a factor of 0.26 percent for each percent of uncrushed material in the sample, based upon wear track tests comparing the polishing resistance of crushed versus uncrushed aggregates with similar composition.

1.5 The AWI is determined for only the sample fraction coarser than a No. 4 (4.75 mm) sieve. The sample fraction coarser than the No. 4 (4.75 mm) sieve may be changed for special investigations or research projects.

2. Referenced Documents

2.1 *ASTM Standards*:

C 136 Test for Sieve Analysis of Fine and Coarse Aggregates

C 294 Descriptive Nomenclature of Constituents of Natural Mineral Aggregates

C 95 Practice for Petrographic Examination of Aggregate for Concrete

C 702 Methods for Reducing Field Samples of Aggregate to Testing Size

E 11 Wire Cloth Sieves for Testing Purposes

E 29 Standard Recommended Practice for Indication Which Places of Figures Are to be Considered Significant in Specified Limiting Values

2.2 *MDOT Standards*:

MTM 111 Test Method for Determining an Aggregate Wear Index (AWI) by Wear Track Polishing Tests

2.3 *MDOT References*:

Research Report R-1098	MDOT Circular Wear Track-Results of Preliminary Aggregate Polishing Tests
Research Report R-1232	An Aggregate Wear Index Reduction Factor for Uncrushed Material in Gravel

3. Significance and Use

3.1 This procedure is used to evaluate the polish resistance of gravel coarse aggregates for HMA top course mixtures. The evaluation is based on wear track tests of aggregates tested according to MTM 111 and as reported in Research Report R-1098.

3.2 This procedure was developed as a rapid means for determining the Aggregate Wear Index of typical gravel aggregates as an alternative to the actual wear track procedure that requires three months for completion. The procedure may also be used to determine the Aggregate Wear Index of recycled asphalt and Portland cement concrete pavement material.

3.3 Wear track testing as reported in Research Report R-1232 indicates that naturally smooth aggregate particle surfaces polish to a greater extent than the fractured surfaces of crushed particles. A reduction factor developed from wear track comparison tests is included to adjust the AWI results for samples with rounded (uncrushed) particles.

4. Apparatus and Supplies

4.1 *The following items are recommended for the proper analysis of the aggregate samples*.

- Sample splitter
- Mechanical sieve shaker
- Sieves conforming to ASTM E 11, with openings of 1 inch (25.0 mm), 3/4 inch (19.0 mm), 2 inch (12.5 mm), 3/8 inch (9.5 mm) and No. 4 (4.75 mm)

5. Computations

5.1 Computations shall be made according to the rounding-off procedure in ASTM E-29.

6. Samples and Sample Preparation

6.1 Samples submitted for AWI determination shall be accompanied by proper identification per MDOT procedures.

6.2 minimum of 1500 grams of aggregate coarser than a No. 4 (4.75 mm) sieve is required for an AWI determination. A 60-pound sample of dense-graded aggregate provides adequate material. Approximately 1500 grams of aggregate coarser than a No. 4 (4.75 mm) sieve are also required for an AWI determination on material extracted from HMA pavements.

6.3 A separate sample must be submitted for each aggregate to be combined in an blend. Sample information must include the blend ratio, the total amounts retained above the No. 4 (4.75 mm) sieve, and the percent crushed for each aggregate in the blend.

6.4 Prepare a sieve analysis sample of approximately 1500 grams by reducing the sample to the required quantity according to ASTM C 702. Samples containing clay lumps must be washed and dried before sieving.

6.5 Prepare a petrographic analysis sample of 300 representative particles retained in each of the following sieve fractions:

1 inch (25 mm) to 3/4 inch (19 mm)

3/4 inch (19 mm) to 2 inch (12.5 mm)

2 inch (12.5 mm) to 3/8 inch (9.5 mm)

3/8 inch (9.5 mm) to No. 4 (4.75 mm)

6.5.1 Material from the sieve analysis sample fraction may be incorporated in the petrographic analysis sample fraction after completion of the sieve analysis. Use all particles in a size fraction if less than 300 particles are present. If the sample contains less than 30 particles in a size fraction, that material shall be combined with the next smaller size fraction before selection of particles for examination.

7. Sieve Analysis

7.1 Conduct a sieve analysis of the sample portion prepared in 6.4, following ASTM C 136. Determine the grading on the basis of 100 percent retained on the No. 4 (4.75 mm) sieve, as shown in Table 1. Since the AWI determination is conducted on the sample fraction coarser than the No. 4 (4.75 mm) sieve, material passing the No. 4 (4.75 mm) sieve may be discarded after the sieve analysis if not needed for other tests.

TABLE 1:
EXAMPLE DATA SHEET FOR AWI SIEVE ANALYSIS

Sieve Size Opening	Grading of Sample, Amount Retained on Individual Sieve		Grading of AWI Fraction Amount Retained on Individual Sieve	
	Wt., g	Percent	Wt., g.	Percent
1 inch (25 mm)	0	0.0	0	0.0
3/4 inch (19 mm)	0	0.0	0	0.0
2 inch (12.5 mm)	88	3.5	88	5.0
3/8 inch (9.5 mm)	620	24.8	620	35.2
No. 4 (4.75 mm)	1052	42.1	1052	59.8
Pan	740	29.6		
TOTALS	2500	100.0	1760	100.0

8. Petrographic Analysis

8.1 Determine the petrographic composition of the sample portion prepared in 6.5, following ASTM C 294 and ASTM C 295, as shown in Table 2, using the rock type categories indicated.

Additional categories may be used, providing wear track factors are available from actual wear track tests.

TABLE 2:
EXAMPLE DATA SHEET FOR GRADING-WEIGHTED PETROGRAPHIC COMPOSITION

Rock Type	Sieve Fraction Analyzed								Grading-Weighted Petrographic Sample Composition, Percent
	1 inch (25 mm) to 3/4 inch (19 mm)		3/4 inch (19.0 mm) to 2 inch (12.5 mm)		2 inch (12.5 mm) to 3/8 inch (9.5 mm)		3/8 inch (9.5 mm) to No. 4 (4.75 mm)		
	Count	Weighted Percent	Count	Weighted Percent	Count	Weighted Percent	Count	Weighted Percent	
Igneous/ Metamorphic	0	0.0	60	1.0	57	6.7	67	13.4	21.1
Sedimentary									
Carbonates	0	0.0	230	3.8	225	26.4	217	43.2	73.4
Sandstone	0	0.0	0	0.0	5	0.6	14	2.8	3.4
Siltstone	0	0.0	0	0.0	0	0	0	0.0	0.0
Shale	0	0.0	0	0.0	0	0	0	0.0	0.0
Clay Ironstone	0	0.0	0	0.0	0	0	0	0.0	0.0
Chert	0	0.0	10	0.2	13	1.5	2	0.4	2.1
AWI Sample Grading, %		0.0		5.0		35.2		59.8	100.0
Particle Counts	0		300		300		300		

8.1.2 Calculate a grading-weighted sample petrographic composition, shown in Table 2, as follows:

Grading-weighted composition, percent = (P/TP) x F

Where: P = Particle count of rock type, from 6.5

TP = Total particles in sieve fraction, from 6.5

F = AWI sample grading, percent, from 7.1

8.2 Either use the percent crushed stated on the mix design communication sheet or calculate the grading-weighted uncrushed particle content in each size fraction of the sieve analysis sample prepared in 6.4, shown in Table 3, as follows:

Grading-weighted uncrushed content, percent = U x F

Where: U = Uncrushed content in sieve fraction, percent, from 8.1

F = AWI sample grading, percent, from 7.1

8.2.1 Uncrushed particles are those which have no fractured faces, except that all sandstone particles are to be considered as crushed particles. The grading-weighted uncrushed composition is the summation of the weighted percent values.

8.2.2 Crag, a lime-cemented conglomerate of sand and gravel particles common in some gravel deposits, presents a special case when determining crushed content. By convention, when the largest rock fragment in a crag particle comprises less than 50 percent of the particle, the crag particle is classified as a crushed particle; when the largest rock fragment comprises greater than 50 percent of the particle, and that fragment, by itself, would be retained on a No. 4 (4.75 mm) the crag particle is considered as a crushed particle if the rock fragment has a fractured appearance. When the largest rock fragment would pass a No. 4 (4.75 mm) the crag particle is included in the sandstone rock type category.

TABLE 3:
EXAMPLE DATA SHEET FOR GRADING-WEIGHTED UNCRUSHED CONTENT

Material in Sample	Sieve Fraction Analyzed								Grading-Weighted Uncrushed Content, Percent
	1 inch (25 mm) to 3/4 inch (19 mm)		3/4 inch (19 mm) to 2 inch (12.5 mm)		2 inch (12.5 mm) to 3/8 inch (9.5 mm)		3/8 inch (9.5 mm) to No. 4 (4.75 mm)		
	Percent by Weight	Weighted Percent	Percent by Weight	Weighted Percent	Percent by Weight	Weighted Percent	Percent by Weight	Weighted Percent	
Crushed	0	0.0	80	4.0	70	24.6	62	37.1	65.7
Uncrushed	0	0.0	20	1.0	30	10.6	38	22.7	34.3
AWI Sample Grading, percent		0.0		5.0		35.2		59.8	100.0
Material Analyzed, percent	0		100		100		100		

9. AWI Determination

9.1 Calculate a grading-weighted sample AWI from the results of 7.1 and the wear track AWI factors for each rock type as shown in Table 4. Note that the calculated AWI for each rock type category is computed from the sample percent expressed as a decimal, as follows:

Grading-weighted rock type AWI = RT x AWIF

Where: RT = Grading-weighted rock type sample content, percent, from Table 2.

AWIF = Wear track AWI factor

The grading-weighted sample AWI is the summation of the calculated AWI values determined for the rock type categories contained in the sample.

9.1.1 The rock types listed in Table 4 are typical of Michigan gravel deposits. If particles of indeterminate type are encountered in samples, it is appropriate to classify them with known types with similar texture and hardness for the purpose of the AWI determination.

9.1.2 Quarried carbonate material of indeterminate origin contained in samples of recycled asphalt or Portland cement concrete shall be assigned the wear track control limestone AWI factor of 170.

9.1.3 Sand-cement fragments in samples of recycled Portland cement concrete shall be assigned the wear track AWI factor of 360. Crag (lime-cemented sand and gravel) shall be assigned the wear track AWI factor of 435.

TABLE 4:
DATA SHEET FOR DETERMINATION OF GRADING-WEIGHTED AWI

COMPOSITION OF SAMPLE			
Rock Type	Percent	Wear Track AWI Factor	Calculated AWI
IGNEOUS/METAMORPHIC	21.1	370	78.1
SEDIMENTARY			
Carbonates	73.4	250	183.5
Sandstone	3.4	490	16.7
Siltstone	0.0	475	0.0
Shale	0.0	335	0.0
Clay Ironstone	0.0	275	0.0
Chert	2.1	345	7.2

Grading-Weighted Sample AWI (E)..... 285.5
Grading-Weighted Uncrushed Particles, Percent (U) 34

AWI Reduction Based on Uncrushed Reduction in Percent 8.8
Adjusted Sample AWI 260.3

9.2 Calculate an adjusted sample AWI, shown in Table 4, as follows:

Adjusted sample AWI = E (1 - 0.0026U)

Where: E = Grading-weighted sample AWI, from 9.1

U =Grading-weighted uncrushed content, percent, from Table 3

9.3 *Calculate the AWI for a blend, as follows:* **Refer to Note at the end of this section.**

$$\text{Blend AWI} = \frac{[(AWI_A \times P_{A4} \times P_A \times F_A) + (AWI_B \times P_{B4} \times P_B \times F_B)]}{[(P_{A4} \times P_A \times F_A) + (P_{B4} \times P_B \times F_B)]}$$

Where: AWI_A = AWI of Aggregate A

AWI_B = AWI of Aggregate B

P_{A4} = percent of Aggregate A > No. 4 (4.75 mm) in blend

P_{B4} = percent of Aggregate B > No. 4 (4.75 mm) in blend

P_A = percent of Aggregate A in blend

P_B = percent of Aggregate B in blend

F_A = specific gravity factor of Aggregate A

F_B = specific gravity factor of Aggregate B

9.3.1 The percentages of aggregates in the blend are obtained from the blend ratio and gradation information submitted with the sample.

9.3.2 The use of specific gravity factors is required in AWI computations for blends since the AWI is related to the surface area of the aggregates exposed on a pavement surface, which is related to the volumes of the various aggregate components in the blend. A specific gravity adjustment for blend aggregates with markedly different specific gravity values is particularly important. In general, the use of the given specific gravity factors in lieu of actual values determined for the aggregate components in a blend will result in a blend AWI that is sufficiently accurate for acceptance/rejection purposes. However, if the specific gravities of the blend aggregates differ considerably from those indicated, actual specific gravity factors should be determined.

The following specific gravity factors to be used are based upon averages of typical samples analyzed in the laboratory:

Bulk Specific Specific Gravity

	Gravity	Factor
Natural Aggregates	2.68	1.0
Blast Furnace Slag	2.24	1.2
Steel Furnace Slag	3.24	0.8

Note: Calculate the AWI for the blend using the cumulative percent retained on the No. 16 sieve for each of the individual aggregates as follows:

Quarried Stone, Mine Rock, and Slag sources will use the AWI number established by MDOT's circular wear track testing.

Natural Aggregate Sand and Gravel sources with established nomographs will run the Michigan Test Method for Measuring Fine Aggregate Angularity (MTM 118) on all aggregates with more than 80 percent passing the No. 4 sieve. The percent crushed in these fine aggregates for use in determining the AWI value from the nomograph is obtained from Table 5.

TABLE 5:
AWI VALUES

ANGULARITY INDEX	PERCENT CRUSHED
< = 3.0	30
> 3.0 to < = 4.0	70
> 4.0	95

Natural Aggregate Sand and Gravel sources without a nomograph must follow the Procedures Manual for Mix Design Processing for submitting aggregate samples, but must include approximately 200 grams of each of the No. 8 and No. 16 fractions. MDOT will conduct the necessary tests and report the results to the aggregate supplier.

Natural Aggregate Sand and Gravel sources with an established nomograph and less than 80 percent passing the No. 4 sieve, will use the percent crushed of the retained No. 4 aggregate to determine the appropriate AWI from the nomograph.

10. Report

10.1 A report summarizing the results of the AWI determination shall include the grading-weighted petrographic composition, computation of the grading-weighted AWI, computed adjustment for uncrushed material, and the grading-weighted adjusted AWI.

MICHIGAN TEST METHOD
FOR
SELECTION AND PREPARATION OF COARSE AGGREGATE SAMPLES FOR FREEZE-THAW TESTING

1. Scope

1.1 This method covers the procedures for securing samples of coarse aggregate, methods of processing and conditioning for freeze-thaw testing in concrete, and related tests required to provide detailed information about the aggregate under consideration.

1.2 This method specifically describes procedures for evaluating coarse aggregate for Portland cement concrete. With suitable modifications, it may also be used for evaluation of aggregate for other uses.

2. Related Documents

2.1 STM Standards:

C 29 Test Method for Unit Weight and Voids in Aggregate
C 127 Test Method for Specific Gravity and Absorption of Coarse Aggregate
C 131 Test Method for Resistance to Degradation of Small-Size Coarse Aggregate by Abrasion and Impact in the Los Angeles Machine
D 75 Methods for Sampling Aggregates

2.2 MDOT Publications:

Standard Specifications for Construction
Procedures for Aggregate Inspection
MTM 102 Abrasion Resistance of Aggregate by the Los Angeles Machine
MTM 110 Deleterious and Objectionable Particles in Coarse Aggregate

3. Apparatus And Materials

3.1 The apparatus and materials required to perform the many tests outlined in this procedure are listed in the respective ASTM standards and MDOT test procedures noted in Section 7.

4. Sampling of Aggregate For Freeze-Thaw Testing

4.1 Samples for freeze-thaw testing are taken at the direction of the Structural Materials Testing Engineer of the Materials and Technology Division or the appropriate District Materials Engineer/Supervisor.

4.2 Samples of coarse aggregate obtained from sources for freeze-thaw durability shall be representative of materials to be furnished to Departmental projects. The plant operation is especially critical with regard to density of heavy media or other procedures used for beneficiation. Production at the time of sampling should not be from an area of the pit, quarry or slag pile which is of limited extent or is not typical of the source.

4.3 Samples of coarse aggregate for freeze-thaw durability testing must contain the following sizes and quantities:

	Series 6	Series 17	Series 26
$^3/_4$ inch to 1 inch (19.0 mm to 25 mm)	100 pounds (45 kg)	0 pounds (0 kg)	0 pounds (0 kg)
$^1/_2$ inch to $^3/_4$ inch (12.5 mm to 19.0 mm)	100 pounds (45 kg)	160 pounds (75 kg)	0 pounds (0 kg)
_ inch to $^1/_2$ inch (9.5 mm to 12.5 mm)	100 pounds (45 kg)	120 pounds (55 kg)	160 pounds (75 kg)
No. 4 to _ inch (4.75 mm to 9.5 mm)	100 pounds (45 kg)	120 pounds (55 kg)	240 pounds (110 kg)

For example, if a series 6 sample is sieved through a Gilson Sieve Shaker (or equivalent) in the Region, 100 pounds (45 kg)(1-1/2 to 2 bags) of each of the four sizes are to be submitted to the Testing Laboratory. If series 6 samples are not separated by size in the Region, a minimum of ten (10) bags of aggregate plus two (2) full bags of scalped material (3/4 to 1 inch)[19 mm to 25 mm] are to be submitted to the Testing Laboratory.

If material is sampled from a stockpile, the sample should be from areas of the stockpile that appear to contain coarser material. If material is sampled from a belt or other area and appears to be lacking in any of the required sizes, additional bags of material should be submitted. Failure to submit sufficient material of the proper sizes prolongs the time until results are available. Hand sieving of coarse aggregate is not thorough enough to replace separation by a Gilson Sieve Shaker.

4.4 In addition to the sample for freeze-thaw testing, one full bag of coarse aggregate representing the gradation being produced must also be submitted for complete mechanical analysis, deleterious and crushed particle content. This bag will be clearly marked with a big "X". The deleterious particle content test results shall be reported as the "production pick" on the Report of Test form.

4.5 Samples from stockpiles shall be taken at a number of widely separated points so as to provide the greatest chance of obtaining material produced over a period of time. If material is obtained from bins or belt discharge, small increments should be taken over a period of time to avoid the effect of any short term variations. Sampling otherwise shall be according to ASTM D 75, unless specifically covered in *Procedures for Aggregate Inspection*.

4.6 Samples shall be accompanied by a "Sample Identification".

5. <u>Regrading of Aggregate</u>

5.1 Production-run coarse aggregate received in the Testing Laboratory will be separated by sieving on the Gilson Sieve Shaker, using the 1-inch (25 mm), 3/4-inch (19.0 mm), $^1/_2$-inch (12.5 mm), 3/8-inch (9.5 mm), and No. 4 (4.75 mm) sieves as required. Material retained on the coarsest sieve required for the series or passing the No. 4 (4.75 mm) sieve shall be discarded. The remaining size fractions shall be retained for recombining as necessary for subsequent tests. Resieving in the Testing Laboratory will not be required for coarse aggregates thoroughly separated on a Gilson Sieve Shaker by Region personnel.

5.2 The coarse aggregate will be recombined in the proportions, by weight, shown in Table 1 except as described in 5.2.1 and 5.2.2. The Series 6 grading shall be used unless otherwise specified for freeze-thaw tests.

TABLE 1 - GRADING OF COARSE AGGREGATES

	% PASSING			
Sieve Size	Series 6	Series 17	Series 26	Peastone (As Rec'd Grading)
1-inch (25.0 mm)	100			
3/4-inch (19.0 mm)	75	100		Grading Typical
1/2-inch (12.5 mm)	50	60	100	of Source, as
3/8 inch (9.5 mm)	25	30	60	produced
No. 4 (4.75 mm)	0	0	0	

5.2.1 Specific Gravity, Absorption, Crushed Particles, Deleterious Particles, and Unit Weight Tests - Coarse aggregate shall be recombined to the grading used for the freeze-thaw tests, except that the deleterious particles determination shall not include the 3/8-inch (9.5 mm) to No. 4 (4.75 mm) fraction for Series 6 and 17 aggregate. Absorption shall be determined with the aggregate in the moisture condition specified in Section 6.

5.2.2 Abrasion Resistance - Coarse aggregate shall be used in separate size fractions or recombined as required.

5.2.3 Deleterious Particle Content - In addition to the production (Bag X) deleterious particle content test, a separate deleterious particle content test will be run on the recombined material and reported as the "F-T pick" on the Report of Test form.

5.3 Fine aggregate used in the concrete for freeze-thaw testing shall meet the requirements for 2NS of the materials division of the Standard Specifications for Construction.

6. Moisture Conditioning

6.1 Before incorporating in concrete, prepare the aggregate to ensure a definite and uniform condition of moisture. Fine aggregate will be used in the moist condition with moisture content determined. Coarse aggregate shall be oven dried prior to moisture conditioning and prepared in one of the following procedures. The method of 6.1.1 is standard for gravel, crushed stone, and crushed concrete while the method in 6.1.2 is standard for blast furnace slag.

6.1.1 Subject the coarse aggregate to a vacuum of 28.5 inches Å 0.2 inches of mercury (96.2 kPa + 0.7 kPa) for one hour, flood the confining chamber with water, release the vacuum, and soak the aggregate for 23 hours. At the end of the 24-hour period, open the chamber, drain the excess water and proceed with concrete batching for freeze-thaw testing.

NOTE: Minimum of 28 inches (94.6 kPa) vacuum must be maintained in the confinement chamber until water covers the entire coarse aggregate sample.

6.1.2 Immerse the coarse aggregate in water for 24 hours. At the end of the 24-hour period, drain the excess water and proceed with the specific gravity and absorption testing of Section 7.1, or the making of concrete for freeze-thaw testing.

6.1.3 Same as 6.1.2 but the 24-hour period shall be changed to some other number of hours as directed by the Engineer in charge.

7. Testing For Material Properties

7.1 Specific Gravity and Absorption - Bulk specific gravity and absorption of coarse aggregate will be determined in accordance with ASTM C 127, using the prescribed 24-hour soak. In addition, the vacuum saturated absorption will be determined using some of the aggregate prepared in paragraph 6.1.1. Record the data and report the results as shown in Figures 1 and 2.

7.2 Deleterious and Crushed Particles Determination ("Pick") - Deleterious particles are soft and chert particles as identified in the "Procedures for Aggregate Inspection." Detailed procedures for picking deleterious and crushed particles are outlined in MDOT's "Procedures For Aggregate Inspection," and MTM 110. Freeze-Thaw samples to be tested for deleterious content shall be picked after the sample has been washed but prior to the particles becoming surface dry. The deleterious particle content for Portland cement concrete coarse aggregate shall be determined on the material retained down to and on the 3/8-inch (9.5 mm) sieve for Series 4, 6 and 17 aggregates, and on the material retained down to and on the No. 4 (4.75 mm) sieve for the Series 26 and peastone aggregates.

7.3 Abrasion Resistance - The abrasion resistance of coarse aggregate particles smaller than 1 inch (25 mm) will be tested in accordance with ASTM C 131 and MTM 102.

7.4 Unit Weight of Aggregate - The unit weight of coarse aggregate will be determined in accordance with ASTM C 29, Shoveling Procedure.

8. Reports

8.1 Report the following data on Form 1804 "Report of Test - Freeze-Thaw Durability In Concrete" as shown in Figure 2.

8.1.1 Report the bulk specific gravity results to the nearest 0.01.

8.1.2 Report the absorption result(s) to the nearest 0.01%, and indicate if saturated by 24-hour soak, vacuum saturation, or other moisture conditioning.

8.1.3 Report the percentage of deleterious particles to the nearest 0.1%, for the material retained on 3/8-inch (9.5 mm) sieve for Series 6 and 17 aggregates and for the material retained on the No. 4 (4.75 mm) sieve for Series 26 and peastone aggregates.

8.1.4 Report the abrasion result to the nearest 1%.

8.1.5 Report the percentage of crushed particles to the nearest 1%.

8.1.6 Report the unit weight of the coarse aggregate to the nearest 1 lb/ft^3 (1 kg/m^3) (for internal use in mix designs only).

Figure 1

Figure 1

DETERMINATION OF SPECIFIC GRAVITY AND ABSORPTION

OF COARSE AGGREGATE USED FOR DURABILITY SPECIMENS

Laboratory Number: 00A-1020 F-T No. 00FT-85 Date: 5-25-00

Identification: ABC Gravel Company, 89-23, 6AA

Condition of Sample	Indication	Weight in grams: Vacuum Saturation		24 hr. Cold Water Immersion	
Saturated Surface Dry in Air	B	2560.0	2500.0	2515.5	2465.5
Saturated Sample in Water	C	1624.0	1582.5	1590.5	1558.0
Oven Dry in Air	A	2514.0	2456.0	2476.0	2425.0
Moisture Content of Sample	B - A	46.0	44.0	39.5	40.5
Volume of Sample in cc.	B - C	936.0	917.5	925.0	907.5
Bulk Specific Gravity (SSD Basis)	B / B - C	2.7350	2.7248	2.7195	2.7168
Average =		2.7299		2.7182	
Bulk Specific Gravity (Oven Dry Basis)	A / B - C	2.6859	2.6768	2.6768	2.6722
Average =		2.6814		2.6745	

Average: 2.68

Absorption Percent	B-A x 100 / A	1.8298	1.7915	1.5953	1.6701
Average =		1.81		1.63	

Unit Weight (lbs/ft^3) 95 X 16.02 = Unit Weight (kg/m^3) 1522

Remarks:

Tested By: K.B. Computed By: K.B. Checked By: R.G.

Figure 2

1804 **REPORT OF TEST**
Freeze-Thaw Durability
In Portland Cement Concrete

File 300

MDOT
Michigan Department of Transportation

Freeze-Thaw No.	00FT-85
Job No.	GENERAL
Laboratory No.	00A-1020
Date:	June 15, 2000

Report on sample of Coarse Aggregate

Date sampled December 29, 1999 Date received January 6, 2000

Source of material ABC Gravel Company, Pit No. 89-23

Sampled from Stockpile @ Source Quantity represented _____

Submitted by J. Smith

Intended use Portland Cement Concrete Specification Grade 6AA, 1996 Std. Specs.

PROPERTIES OF COURSE AGGREGATE

			F-T Pick	Production
Bulk Specific Gravity	2.68	Deleterious Particles	1 inch- 3/8 inch	1 inch- 3/8 inch
Absorption %		Soft Particles, %	0.0	0.0
24- hour soak	1.63	Chert, %	0.0	0.0
Vacuum-Saturation	1.81	Sum of Soft and Chert, %	0.0	0.0
Crushed Material In Sample	40	Coke & Coal		
Los Angeles Abrasion, % of wear	22	Unit Weight of Agg. (Dry, loose) lbs/ft^3	92	

		BATCH NUMBER			
CONCRETE MIX DATA		1	2	3	Average
Date Made		6-22-95	6-29-95	7-6-95	
Slump, in		2.5	2.25	2.0	2.25
Unit Weight of Concrete, lbs/ft^3		146.1	145.6	144.9	145.0
Actual Cement Content, lbs/yd^3		519	517	512	516
Water-Cement Ratio, by weight		0.46	0.45	0.44	0.45
Air Content, %		6.3	7.0	7.2	6.8
Compressive Strength, psi	7 Days	4030	3890	3800	3910
	28 Days	4750	4600	4550	4630
Freeze-Thaw Durability, Expansion per 100 Cycles, %	Beam 1	0.008	0.018	0.008	
	Beam 2	0.016	0.006	0.015	
	Beam 3	0.012	0.010	0.009	
	Beam 4	0.012	0.011	0.011	0.011

Remarks: Tested for Information
Freeze-Thaw Testing conducted in T-3

MICHIGAN TEST METHOD
FOR
MAKING CONCRETE SPECIMENS FOR
FREEZE-THAW TESTING OF CONCRETE COARSE AGGREGATE

1. Scope

1.1 This method describes the procedure for making concrete beams to be tested according to MTM 115, for determining the durability of concrete coarse aggregate in freezing and thawing. The method includes criteria for design of the concrete mixture, tests on the freshly mixed concrete, fabrication of specimens, and tests for strength of hardened concrete.

2. Applicable Documents

2.1 ASTM Standards:

C 39 Test Method for Compressive Strength of Cylindrical Concrete Specimens
C 128 Test Method for Specific Gravity and Absorption of Fine Aggregate
C 138 Test Method for Unit Weight, Yield, and Air Content (Gravimetric) of Concrete
C 143 Test Method for Slump of Portland Cement Concrete
C 150 Specification for Portland Cement
C 173 Test Method for Air Content of Freshly Mixed Concrete by the Volumetric Method
C 185 Test Method for Air Content of Hydraulic Cement Mortar
C 188 Test Method for Density of Hydraulic Cement
C 192 Method of Making and Curing Concrete Test Specimens in the Laboratory
C 231 Test Method for Air Content of Freshly Mixed Concrete by the Pressure Method
C 490 Specification for Apparatus for Use in Measurement of Length Change of Hardened Cement Paste, Mortar, and Concrete
C 566 Test Method for Total Moisture Content of Aggregate by Drying
C 617 Method of Capping Cylindrical Concrete Specimens
C 1064 Test Methods for Temperature of Freshly-Mixed Portland Cement Concrete

2.2 ACI Standards:

211.1 Practice for Selecting Proportions for Concrete

2.3 MDOT Publications:

MTM 113 Method of Selection and Preparation of Coarse Aggregate Samples for Freeze-Thaw Testing
MTM 115 Method of Testing Concrete for Durability by Rapid Freezing in Air and Thawing in Water

3. Equipment and Materials

3.1 Equipment Required - Equipment shall be as described in ASTM C 192, including concrete mixer, cylinder molds 4 by 8 inches (102 mm by 203 mm), tamping rods, slump apparatus, air content apparatus including pressure meter (Type A or B) and volumetric meter (Rollameter), unit weight container, curing facilities, and small tools.

3.1.1 Beam molds shall conform to the requirements of ASTM C 192, and in addition shall be constructed to provide test beam specimens with dimensions of 3 inch (76 mm) height, 4 inch (102 mm) width, and 15-1/2 inch (394 mm) length as cast for length change measurements. Thread gage studs into the end plates to provide an overall length of 16.0 inches (406 mm) and a gage length of 13.5 inches (343 mm), based on distance from under the heads of the gage stud bolts. See ASTM C 490 for general concept for gage stud attachment. One monitor beam specimen 3 by 4 by 16 inches (76 mm by 102 mm by 406 mm) per source will be cast with a center embedded type T thermocouple.

3.1.2 Gage studs shall be 1-1/4 by 1/4 inch (32 mm by 6.35 mm) stainless steel bolts or machine screws with 1/4 inch (6.35 mm) - 20 UNC threads. The ends shall be rounded to 3/16 inch (4.75 mm) radius.

3.1.3 Scales shall be as described in ASTM C 192, with capacity of at least 100 pounds (45 kg), and able to weigh small quantities of water to 0.01 lb. (0.01 kg).

3.1.4 Armored thermometer, Fahrenheit (Celsius) scale, as described in ASTM C 1064.

3.1.5 Unit weight apparatus as described in ASTM C 138.

3.1.6 Capping apparatus as described in ASTM C 617.

3.1.7 Compressive strength apparatus as described in ASTM C 39.

3.2 Materials:

3.2.1 Portland cement, Type I, conforming to ASTM C 150. Cement from three sources is to be blended. Alkali content of cement will be monitored by review of mill reports from cement producers.

3.2.2 Fine aggregate from laboratory stock material conforming to MDOT specification 2NS.

3.2.3 Coarse aggregate as furnished for test per MTM 113.

3.2.4 Air entraining admixture, neutralized vinsol resin. Dilution may be required to measure the small quantities used.

4. <u>Concrete Mix Design</u>

4.1 Mix Parameters - Use the following constants for the proportioning of concrete mixtures:

4.1.1 Cement Content - 5.5 sk/yd^3 (517 lb/yd^3) [307 kg/m^3].

4.1.2 Consistency (slump) - 2-1/2 inch (65 mm) (based on Relative Water Content of 1.15).

4.1.3 Air content - 7% for Series 6 and 17, 8% for Series 26 and 8.5% for peastone.

4.1.4 Coarse aggregate content (b/b_o) - 0.75 for Series 6 and 17, 0.66 for Series 26 and 0.57 for peastone (based on dry, loose unit weight of recombined coarse aggregate).

4.2 Mix Design Procedure - Determine the concrete mixture proportions by use of the modified "Mortar-Void Theory" by Talbot and Richart (Bulletin 137, University of Illinois Engineering Experiment Station), specifically as contained in MDOT Portland Cement Concrete mix design computer program. (The procedure described in ACI 211.1 will provide similar proportions for users outside of MDOT, provided the proportioning is based on the parameters shown in 4.1). The values for specific gravity of cement shall be the average of all cements according to ASTM C 188 (or the standard value of 3.15). The specific gravity and absorption of the fine aggregate shall be as determined according to ASTM C 128. The specific gravity and absorption of the coarse aggregate, for the moisture condition in which it is to be used, shall be as described in MTM 113. Express the proportions in pounds per cubic yard (kg/m^3) of concrete, based on dry weight of aggregates, total of absorbed and free mixing water, and the dry, loose unit weight of coarse aggregate. A typical computer printout of proportions is shown in Figure 1.

4.3 Determine batch weights as shown on the design sheet in Figure 2. Batches for the tests and specimens described in Sections 6 and 7 will require 0.9 ft^3 (0.025 m^3) when the air content is determined by the pressure method. Adjust the nominal batch size as necessary if other tests or specimens are required. Cement weights are to be equal proportions of three different sources of cement unless otherwise provided. Coarse aggregate weights are to be proportioned as described in 5.2 and Table 1 of MTM 113.

5. <u>Mixing Concrete</u>

5.1 General - Complete testing of coarse aggregate for durability in freezing and thawing requires three test beams from each of three batches made on different days. In addition, one monitor beam shall be made from one of the batches, usually batch #1. The following procedure describes the method of making a single batch. If results from the first batch deviate from the desired properties by a moderate (but not excessive) amount, corrections may be made for subsequent batches so that the average is within allowable limits. If the water used differs appreciably from the design water content, a redesign of the mixture proportions may be necessary. Due to limited amount of coarse aggregate available, a batch should be discarded only for substantial departure from the desired mix parameters.

5.2 Weighing Materials - Weigh the materials in the quantities determined on the computation sheet as illustrated in Figure 3.

5.2.1 Coarse Aggregate - Weigh the size fractions dry in the following order: 3/4 to 2 inch (19 mm to 12.5 mm), 3/8 to No. 4 (9.5 mm to 4.75 mm), 2 to 3/8 inch (12.5 mm to 9.5 mm), and 1 to 3/4 inch (25 mm to 19 mm), presuming all size fractions are used. (Placing a coarser fraction in the bottom of the container prevents small particles from sticking when the aggregate is placed in the mixer). Moisture-condition the coarse aggregate as described in 6.1 of MTM 113. At the end of the moisture-conditioning period and immediately before batching to the mixer, decant excess water until that remaining in the container is less than the total water computed for the batch (see 5.2.4). Weigh the container with coarse aggregate and water, so that the water can be adjusted to the proper amount.

5.2.2 Fine Aggregate - Determine the total moisture content of the fine aggregate according to ASTM C 566. Adjust the batch weight by the amount of moisture in the sample. Protect the fine aggregate from drying between sampling for moisture content and introducing into the mixer.

5.2.3 Cement - Weigh the three amounts as illustrated on the computation sheet, Figure 3.

5.2.4 Water - Weigh the amount of water indicated by the mixture design less the quantity of water included with the coarse aggregate and with the fine aggregate. The quantity of water other than that included with the coarse and fine aggregates, to be held back from the water as designed, and added during mixing as necessary to achieve the specified slump, should be a minimum of 1.5 pounds (0.70 kg). A small additional quantity may be weighed in case the design quantity is slightly less than that required to provide the desired slump.

5.3 Batching and Mixing - After "buttering" the mixer as described in ASTM C 192, charge the materials into the mixer in the following order:

5.3.1 The coarse aggregate and the water in that container (see 5.2.1).

5.3.2 Air entraining admixture, as required for desired air content. 5.3.3

Fine aggregate.

5.3.4 Start mixer and add the cement.

5.3.5 Start timer when all cement is in mixer, then mix for 3 minutes. Add water during the mixing period until the concrete appears to exhibit the required consistency of 2 to 3 inch (50 mm to 75 mm) slump.

5.3.6 Stop mixer for 3 minute rest period. Cover concrete in mixer during this period with damp burlap or the mixer lid to prevent evaporation losses.

5.3.7 Restart mixer and mix the concrete for 2 minutes additional. Add water if necessary to obtain the desired consistency. Only a small amount of water addition during this period is desirable.

5.4 Weigh the water remaining and record on the computation sheet, Figure 3.

6. Tests on Freshly Mixed Concrete

6.1 Consistency - Determine the slump of the concrete according to ASTM C 143. Return the concrete sample to the mixer after the test.

6.2 Temperature - Determine the temperature of the concrete in the mixer according to ASTM C 1064.

6.3 Unit Weight - Determine the unit weight of the concrete according to ASTM C 138. Return the concrete sample to the mixer after test.

6.4 Air Content - Determine the air content of the concrete by the pressure method according to ASTM C 231 for most natural aggregates (use of type A or B air meter is presumed). Use the volumetric method according to ASTM C 173 for blast-furnace slag and other aggregates with high absorption (>2.50%) properties. The air content should be within a +2% to -1% tolerance band around the nominal specified in 4.1.3. All batches outside these limits will be discarded. Air contents should be on the higher end of the range, rather than the low end. If the pressure method is used, at the end of the test carefully release the cover of the meter to allow the water to escape, tilt the bowl so that all water drains from the surface, and return the concrete sample to the mixer. If the volumetric method is used, the concrete from the air content test is discarded.

6.5 Remixing - Following tests on the freshly mixed concrete and the return of those portions to the mixer, remix the concrete for approximately 20 to 30 seconds, prior to molding specimens.

7. Molding Specimens

7.1 Number of Specimens - Mold 4 cylinder specimens, 4 inch (102 mm) diameter by 8 inch (203 mm) height, for compressive strength tests. Mold 3 beam specimens, 3 by 4 by 15-1/2 inch (76 mm by 102 mm by 394 mm) with reference gage studs imbedded in the ends, for freeze-thaw testing. Mold 1 monitor beam specimen (without gage studs) with Type T thermocouple embedded in the center, usually from batch #1 only.

7.2 Procedure:

7.2.1 Cylinders - Mold the cylinders as described in ASTM C 192, consolidating the concrete by rodding. After molding is completed, cover the specimens with steel plates.

7.2.2 Beams - Mold the beams as described in ASTM C 192, using the rodding procedure for consolidation and with special care to consolidate the concrete around the gage studs (if present). Strike off and finish the surface using a wood float. After the concrete has hardened sufficiently to prevent damage to the surface, cover with multiple layers of damp burlap.

8. Curing

8.1 Demold the specimens 20 to 24 hours after casting. Take care in removing beam end plates to avoid loosening gage studs or thermocouple lead. Mark the specimens with identifying numbers. After demolding, cure the specimens as described in ASTM C 192, except the beam specimens shall be cured in lime-saturated water until the day prior to the start of freeze-thaw testing (day 13). At that time, the beams shall be placed in a 40 °F + 1 °F (4.4 °C + 0.5 °C) water bath for approximately 16 hours before initial length readings are taken and they are placed in the freeze-thaw machine. Cylinder specimens may be cured either in moist air or in lime-saturated water.

9. Tests on Hardened Concrete

9.1 Compressive Strength - Test the concrete for compressive strength according to ASTM C 39. Test 2 cylinders at 7 days and 2 cylinders at 28 days age. Record results on a data sheet as shown in Figure 4.

9.2 Freeze-Thaw Durability - Test 3 specimens for freeze-thaw durability as described in MTM 115, starting at an age of 14 days.

10. Computations

10.1 Compute the unit weight of concrete, volume per batch, actual cement content, net water used, and water-cement ratio as shown on the yield data sheet as shown in Figure 5.

11. Report

11.1 Report the following data on the "Report of Test Freeze-Thaw Durability in Concrete" as shown in Figure 6.

11.1.1 Date each batch was made.

11.1.2 Slump, inch (mm).

11.1.3 Unit weight of concrete, lb/ft^3(kg/m^3).

11.1.4 Actual cement content, lb/yd^3(kg/m^3).

11.1.5 Water-cement ratio, by weight.

11.1.6 Air Content, %.

11.1.7 Compressive strength, psi (MPa), at 7 and 28 days.

11.1.8 Moisture condition of coarse aggregate, i.e. vacuum saturated, 24-hour soaked, or other conditioning in remarks if non-standard.

FORM 1830 **MICHIGAN DEPARTMENT OF TRANSPORTATION** FILE 300

CONCRETE PROPORTIONING DATA

CONTROL SECTION ID: GENERAL
JOB NUMBER: FREEZE-THAW
LAB NUMBER: 00A-1020
GRADE OF CONCRETE: FT
INTENDED USE OF CONCRETE: FREEZE THAW DURABILITY

DATE: 6/21/00
SPECIFICATION: MTM 114
MIX DESIGN NUMBER: 00FT-85

CONCRETE MATERIALS

MATERIAL	SOURCE	SOURCE NUMBER	CLASS	SPECIFIC GRAVITY	ABSORPTION PERCENT
CEMENT	(SEE REMARKS)		I/IA		
FINE Agg.	BIN	19-58	2NS	2.65	0.90
COARSE Agg.	ABC GRAVEL COMPANY	89-23	6AA	2.68	1.81

CEMENT CONTENT, LB/CU YD: 517 (SK/CU YD): 5.5
AIR CONTENT (DESIGN): 7.0 % (SPECIFIED): 7.0%
R.W.C.: 1.15
FLY ASH CONTENT, LB/CU YD: 0
THEORETICAL YIELD = 99.96

B/Bo: 0.75
SPECIFICATION TOLERANCE (+ -) = 1.5%

	AGGREGATE AND WATER PROPORTIONS QUANTITIES, LB/CU YD OF CONCRETE		
WEIGHT OF COARSE AGG. (DRY, LOOSE) LB/CU FT	FINE AGG. (OVEN DRY)	COARSE AGG. (OVEN DRY)	TOTAL WATER
90	1291	1822	276
91	1274	1842	276
92	1256	1863	275
93	1239	1883	274
94	1222	1903	273
95	1205	1923	272
96	1187	1944	272
97	1170	1964	271
98	1153	1984	270
99	1136	2004	269
100	1118	2025	268

THIS CHART FOR USE WITH CEMENTS OF THE CLASS SHOWN FROM APPROVED SOURCES.
TYPICAL UNIT WEIGHT (DRY, LOOSE) OF COARSE AGGREGATE AS DESCRIBED ABOVE IS 95 LB/CU FT.

SPECIAL MESSAGES:

CC: Tom Woodhouse

John Staton
MATERIALS RESEARCH & TESTING ENGINEER

FREEZE-THAW DURABILITY MIX DESIGN
WORKSHEET

	Freeze-Thaw No. 00FT-85	Lab. No.	Sp. Gr.	Abs.
Cement, Blend of:	Blue Circle (Detroit), Lafarge (Alpena), Lafarge (Paulding)		3.11	
Coarse Aggregate:	ABC Gravel Company 89-23 6AA	00A-1020	2.68	1.81
Fine Aggregate:	Bin, Pit No. 19-58		2.65	0.90

MATERIAL	WEIGHT LBS PER YD;	BATCH PROPORTIONS, POUNDS
CEMENT	5.5 Sack= 517 lb	0.90 ft; = 5.74 1/3 5.74 1/3 5.75 1/3 17.23 Total Cement (c)
COARSE AGGREGATE (DRY)	1923	Pass Ret. 16.02 1" - 3/4" 25% 16.02 3/4" - 2" 25% 16.02 2" - 3/8" 25% 16.03 3/8" - #4 25% 64.09 Total Coarse Agg. (a)
FINE AGGREGATE (DRY)	1205	40.16 Total Fine Aggregate (b)
TOTAL WATER AND ABSORBED WATER C. AGG. 1923 F. AGG. 1205	Total Water 272 X 0.0181 = 34.81 + X 0.0090 = 10.84 = Abs. Water 45.65	9.07 Total Water (d)

Total Aggregate Contains 39 % Fine Aggregate

*lb/yd; x 0.03333 = 0.90 ft; Batch

Computed By: T.W. Checked By: K.B.

BATCH COMPUTATIONS FOR MAKING CONCRETE FOR AGGREGATE DURABILITY SPECIMENS (WEIGHT IN POUNDS)

Freeze-Thaw No. 00FT-85

COARSE AGGREGATE				BATCH NO.	00A-1020 – 1
CAN # 1	14.82		64.09		
	1" - 3/4"	16.02	14.82	COARSE AGGREGATE	ABC GRAVEL CO, PIT NO. 89-23
	30.84		**78.91**		
3/4 - 2	16.02				6AA
	46.86				
1/2 - 3/8	16.02			DATE: (MOISTURE CONDITIONED)	6 - 21 - 00
	62.88				
3/8 - #4	16.03			(BATCH MADE)	6 - 22 - 00
TOTAL	**78.91**				
FINE AGGREGATE				WATER MEASUREMENT	
			b) 40.16		
PAIL # 1	2.58		0.0251		
			1.01	COARSE AGG + CAN	
DRY WT.	40.16				9.07
MOIST.(LB)	1.01			78.91	-2.00
TOTAL	**43.75**			+ TOTAL WATER	7.07
				9.07	
CEMENT				- RESERVE WATER	
				2.00	
	PAIL # 1 2.60	)	17.23		
			2.60		
	1/3	5.74	**19.83**	= 2.42 – 0.65 Surplus AGG WATER	
	8.34			Reserve Water	2.00
1/3	5.74			- Surplus Water	- 0.65
	14.08			= 1.35	+
1/3	5.75			= Subtotal of Water in Batch	=
TOTAL	**19.88**			**+** Moisture0.42 in Fine- 0 42Agg.	8.42
AIR ENTRAINING ADMIXTURE			10 ml	= TOTAL WATER IN BATCH (d)	= d) **9.43**
Summary of Proportions					
a) Coarse Agg. as Designed			64.09	Wt.of Concrete and Unit Wt. Bucket	89.39
b) Fine Agg. as Designed			40.16		
c) Cement as Designed		1	7.23	= Weight of Concrete (f)	= f) **72.69**
d) Total Water of Batch			9.43	SLUMP =	2.5
e) Total Weight of Batch		**130.91**			
Design Weights: Computed By:		T.W.		AIR CONTENT =	6.5
Checked By:		K.B.		- Factor of Agg. Porosity	- 0.2
				= Percent Air	= 6.3
Mixed Weights: Computed By:		K.B.		CONCRETE TEMPERATURE =	73
Checked By:		K.B.			

FREEZE-THAW DURABILITY
COMPRESSIVE STRENGTH TESTS

Laboratory Number: 00A-1020 **Freeze-Thaw Number: 00FT-85**

Coarse Aggregate: ABC GRAVEL COMPANY **Batch Number**

89-23	1	2	3
Date of Mix	6-22-00	6-29-00	7-6-00
Date of 7 Day Tests A & B	6-29-00	7-6-00	7-13-00
Date of 28 Day Tests C & D	7-20-00	7-27-00	8-10-00

Batch #	Specimen	Diameter inches	Area in5	Total Load	Comp. St. psi	Average psi
1	A	3.99	12.50	39500	3160	
	B	3.99	12.50	37800	3020	3090
	C	3.99	12.50	49400	3950	
	D	3.99	12.50	49600	3970	3960
2	A	4.00	12.57	41600	3310	
	B	4.00	12.57	43900	3490	3400
	C	3.99	12.50	57900	4630	
	D	3.99	12.50	55400	4430	4530
3	A	3.99	12.50	38500	3080	
	B	3.99	12.50	38000	3040	3060
	C	4.00	12.57	50400	4010	
						4140

		MPa
Compressive strength in psi x 0.0068948 = MPa	1-A & E	21.3
	1-C&D	27.3
	2-A&B	23.4
Average MPa		31.2
	2-C & D	21.1
	3-A & B	28.5
	3-C & D	

	D	4.00	12.57	53700	4270	

Remarks: Checked by: K. B.

YIELD DATA
AGGREGATE DURABILITY CONCRETE MIXES

Coarse Aggregate: ABC Gravel Company, 89-23, 6AA **F-T No. 00FT-85**

	Formulae for Computation	Computation Details			Yield Data			
		Batch No. 00A-1020						
		1	**2**	**3**	**1**	**2**	**3**	
g	Unit Weight of Concrete f / 0.	72.69 / 0.503	73.24 / 0.503	72.26 / 0.503	144.51	145.61	143.66	lb/ft;
h	Volume of e one batch / g of Concrete	130.91 / 144.51	131.04 / 145.61	130.34 / 143.66	0.9059	0.8999	0.9073	ft;/ batch
i	Cement used for one yd; of Concrete / 17.23 x 27 / h	465.21 / 0.9059	465.21 / 0.8999	465.21 / 0.9073	514	517	513	lb/yd;
j	Net Water Used for one yd; of Concrete / d x 27 -Abs.H20 / h	9.43 x 27 / 0.9059 = 281.06 - 45.65 = 235.41	9.27 x 27 / .08999 = 278.13 - 45.65 = 232.48	9.17 x 27 / 0.9073 = 272.89 - 45.65 = 227.24	235.41	232.48	227.24	lb/yd;
k	Water/cement j Ratio / i	235.41 / 514	232.48 / 517	227.24 / 513	0.46	0.45	0.44	w/c

Computed by: K.B. K.B. K.B.

Note: c, d, e & f are to be taken from the design computation sheets.

Checked by: T.W.

REPORT OF TEST
Freeze-Thaw Durability
In Portland Cement Concrete

Form 1804 File 300

Freeze-Thaw No.	00FT-85
Job No.	GENERAL
Laboratory No.	00A-1020
Date:	June 15, 2000

Report on sample of Coarse Aggregate

Date sampled December 29, 1999 Date received January 6, 2000

Source of material ABC Gravel Company, Pit No. 89-23

Sampled from Stockpile @ Source Quantity represented

Submitted by J. Smith

Intended use Portland Cement Concrete Specification Grade 6AA, 1996 Std. Specs

PROPERTIES OF COURSE AGGREGATE

			F-T Pick	Production
Bulk Specific Gravity	2.68	Deleterious Particles	1 inch- 3/8 inch	1 inch- 3/8 inch
Absorption %		Soft Particles, %	0.0	0.0
24- hour soak	1.63	Chert, %	0.0	0.0
Vacuum-Saturation	1.81	Sum of Soft and Chert, %	0.0	0.0
Crushed Material In Sample	40	Coke & Coal		
Los Angeles Abrasion, % of wear	22	Unit Weight of Agg. (Dry, loose) lbs/ft;	92	

		BATCH NUMBER			
CONCRETE MIX DATA		1	2	3	Average
Date Made		6-22-95	6-29-95	7-6-95	
Slump, in		2.5	2.25	2.0	2.25
Unit Weight of Concrete, lbs/ft;		146.1	145.6	144.9	145.0
Actual Cement Content, lbs/yd;		519	517	512	516
Water-Cement Ratio, by weight		0.46	0.45	0.44	0.45
Air Content, %		6.3	7.0	7.2	6.8
Compressive Strength, psi	7 Days	4030	3890	3800	3910
	28 Days	4750	4600	4550	4630
Freeze-Thaw Durability, Expansion per 100 Cycles, %	Beam 1	0.008	0.018	0.008	
	Beam 2	0.016	0.006	0.015	
	Beam 3	0.012	0.010	0.009	
	Beam 4	0.012	0.011	0.011	0.011

Remarks: Tested for Information
Freeze-Thaw Testing conducted in T-3

MICHIGAN TEST METHOD
FOR
TESTING CONCRETE FOR DURABILITY
BY RAPID FREEZING IN AIR AND THAWING IN WATER

1. Scope

1.1 This method describes the procedure for testing concrete beams to evaluate their durability in rapid freezing and thawing, specifically for the evaluation of coarse aggregate used in the concrete. The method uses concrete beam specimens prepared according to MTM 114 and describes the freeze-thaw cycling and evaluation of the beams by the length change (dilation) procedure. This method conforms to the general requirements of ASTM C 666, Procedure B.

2. Applicable Documents

2.1 ASTM Standards:

C 490 Specification for Apparatus for Use in Measurement of Length Change of Hardened Cement Paste, Mortar, and Concrete
C 666 Test Method for Resistance of Concrete to Rapid Freezing and Thawing
E 178 Practice for Dealing with Outlying Observations

2.2 MDOT Publications:

MTM 113 Method of Selection and Preparation of Coarse Aggregate Samples for Freeze-Thaw Testing
MTM 114 Method for Making Concrete Specimens for Freeze-Thaw Testing of Concrete Coarse Aggregate

3. Apparatus

3.1 The equipment for freeze-thaw testing shall be as described in ASTM C 666, including an automatic freezing-and-thawing apparatus as necessary for testing by Procedure B (without specimen containers), temperature-measuring equipment, length change comparator, and tempering tank.

3.2 The length change comparator shall conform to the requirements of ASTM C 490, except that the comparator and reference bar shall be set for a nominal overall length of 16 inches (406 mm) (13.5-inch [343 mm] gage length). Dial gage micrometers for use on the length change comparator shall meet the graduation interval and accuracy requirements for C 490 for the inch calibration requirements. Prior to the start of measurements on any specimens, fix the comparator at an appropriate length to accommodate all of the specimens to be monitored for length change.

4. Freezing-And-Thawing Cycle

4.1 The nominal freezing-and-thawing cycle for this method shall consist of alternately lowering the temperature of the specimens from 40ºF to 0ºF (4.4ºC to -17.8ºC) and raising it from 0ºF to 40ºF (-17.8ºC to 4.4ºC), within the temperature limitations of ASTM C 666. The nominal cycle length shall be 3 hours. Table 1 is a tabulation of temperature versus time that is achieved by MDOT equipment.

4.2 The thawing portion of the cycle may be extended when necessary in order to use the freeze-thaw chamber as a tempering tank while testing specimens.

5. Test Specimens

5.1 The specimens for use in this test shall be beams made and cured according to MTM 114. Three beams from each of 3 batches of concrete shall constitute a test, or a minimum of 7 beams (with no more than 1 damaged beam per batch) if there should be mechanical damage to specimens.

6. Test Procedure

6.1 Except as otherwise stated herein, all testing shall be according to ASTM C 666. So that the freezing-and-thawing apparatus works under constant load at all times, fill all spaces with either test beams, control beams, or dummy beams.

6.2 On the day prior to starting the beams in freeze-thaw, place them in a 40°F 1°F (4.4°C + 0.5°C) water bath for approximately 16 hours before being placed in the machine and determine the initial length comparator reading for each specimen in accordance with ASTM C 490.

6.3 Start freezing-and-thawing tests by placing the specimens in the freeze-thaw apparatus during the thawing cycle. Remove the specimens approximately 24 hours after the start of freezing and thawing (approximately 8 cycles) and test for length change. Subsequently, test the specimens for length change twice weekly (at intervals not exceeding 36 cycles when possible).

6.4 Continue freezing and thawing until the specimens have been exposed to 300 cycles, or until the length change reaches 0.100%, whichever occurs first. Determine the final length comparator reading of the specimen at the end point. For beams failing before 300 cycles (i.e., reaching 0.100% total dilation), use the number of cycles at that point to calculate dilation per 100 cycles. For beams tested to over 300 cycles (due to holidays or weekends, etc.), interpolate for total dilation at 300 cycles for the value to be used in calculating dilation per 100 cycles.

6.5 Record the values of length change, number of cycles, and location in the freeze-and-thaw apparatus on a worksheet as shown in Figure 1.

7. Calculations

7.1 Length Change - Calculate the length change in inches and in percent as indicated in Figure 1. At the end of test calculate the average expansion per 100 cycles as:

$$L_c = \frac{E' \times 100}{n}$$

Where:

L_c = length change at end of test per 100 cycles, %
E' = total length change in percent
n = number of cycles at end of test

7.2 Outlier Tests - Evaluate any suspected outliers according to the methods of ASTM E 178 for possible elimination in the average length change calculations. See attached Annex A.1, Identification of Outliers in Freeze-Thaw Dilation Results, for proper application.

8. Report

8.1 Report the following data on the "Report of Test - Freeze-Thaw Durability in Concrete" as shown in Figure 2, for each beam and the average of the nine beams in the test (less any excluded according to 7.2, or due to mechanical damage) where indicated.

8.1.1 Expansion per 100 cycles in percent, individual values and average.

8.2 Combine the results of testing under this method with the results obtained under MTM 113 and 114 to provide a complete report on the aggregate being tested, as shown in Figure 2.

TABLE 1: TEMPERATURE VERSUS TIME CYCLING

Function	Time	Sample Tank Air/Water Temp °C (F)	Beam (At Center) Temp °C (F)
Start Cooling	0	+40 (+4.4)	+40 (+4.4)
	10	+8 (-13.3)	+31 (-0.6)
	20	+4 (-15.6)	+25 (-3.9)
	30	+3 (-16.1)	+21 (-6.1)
	40	+2 (-16.6)	+17 (-8.3)
	50	+1 (-17.2)	+13 (-10.6)
	60	0 (-17.8)	+10 (-12.2)
	70	0 (-17.8)	+8 (-13.3)
	80	0 (-17.8)	+6 (-14.4)
	90	0 (-17.8)	+4 (-15.6)
	100	0 (-17.8)	+2 (-16.7)
Stop Cooling	105	0 (-17.8)	+1 (-17.2)
	110	0 (-17.8)	0 (-17.8)
Flood Sample Tank	112	(Air/Water Transition)	0 (-17.8)
	120	+34 (+1.1)	+25 (-3.9)
	130	+37 (+2.8)	+33 (+0.6)
	140	+39 (+3.9)	+37 (+2.8)
	150	+40 (+4.4)	+39 (+3.9)
	160	+40 (+4.4)	+40 (+4.4)
Empty Sample Tank	170	+40 (+4.4)	+40 (+4.4)
Start Cooling	180	+40 (+4.4)	+40 (+4.4)

Note: There is a 3 F (1.7° C) tolerance band around the above temperature curves.

ANNEX
(Mandatory Information)

A1 IDENTIFICATION OF OUTLIERS IN FREEZE-THAW DILATION RESULTS

A1.1 Identify outliers according to ASTM E 178. Type of outliers and method of analysis are as follows:

A1.1.1 Case A is the most common case where the smallest or the largest observation in the set of nine dilation values *appears* to be an outlier. Use the one-sided T test.

A1.1.2 Case B is the case where the two smallest or two largest observations *appear* to be outliers. Use the Grubbs test.

A1.1.3 Case C is the least frequent case where the smallest <u>and</u> the largest observation *appear* to be outliers. Use the Tietjen-Moore statistic.

Note A1.1 All three of these methods are explained in ASTM E 178.

A1.2 For Case A, use the critical value of 2.323 from Table 1 for n = 9 observations and an upper 1% significance level. If the suspected outlier is on the low end, T_1 is the comparison statistic while for the high end, T_9 is used. The smallest observation x_1 is an outlier provided that T_1 is greater than the critical value. The largest observation x_9 is an outlier if T_9 is greater than the critical value.

A1.3 For Case B, use the critical value of 0.1082 from Table 4 for n = 9 observations and an upper 1% significance level. The two smallest observations x_1 and x_2 are outliers if $S^2_{1,2}/S^2$ is less than the critical value. The two largest observations x_8 and x_9 are outliers if $S^2_{8,9}/S^2$ is less than the critical value.

A1.4 For Case C, use the critical value of 0.078 from Table 14 for n = 9, alpha = 0.01 as a comparison with the calculated E_2 value. The original smallest observation x_1 and largest observation x_9 are outliers provided E_2 is smaller than the critical value.

A1.5 The appropriate critical value must be applied for a given value of (n) observations. The number of observations may vary from n = 7 to n = 9. If, however, it is determined that less than seven observations remain after eliminating outliers, a new set of dilations will be determined from the same aggregate source.

A1.6 Several test reports have been analyzed. The attached worksheet (Figure A1.1) identifies the outliers and shows the resulting overall dilation results after excluding the verified outliers. This outlier test will be performed as part of the test report preparation by the Structural Services Unit. Some statistical judgment is required to determine which of the three cases characterizes the given data set in question. Once an outlier has been confirmed and eliminated, further checks in an attempt to eliminate additional results should not be applied. Calculations for the three cases above are performed by the Freeze-Thaw Dilation Program (FTD) in the Structural Services Unit.

Figure 1

FREEZE-THAW DURABILITY EXPANSION WORKSHEET

Laboratory No. 90A-1020-2-2 Pit No. 89-23 Beam No. 17
Pit Name ABC Gravel Company Spec. 6AA F-T No. 00FT-85
Batch Made 6-29-00 Starting Date 7-13-00 End Date 8-21-00
Gage Length: 13.5 inches (343 mm)
All Measurements To Be Made At 40 EF V 1 EF (4.4 EC V 0.5 EC)
Comparator Reading - Reference Bar = 0.1900 (RR)

Date	Time	Number of Cycles (n)	Specimen Comparator Reading (RS)	Expansion+ or Contraction (E)	Percent Expansion (E')		Space Number
7/13	8:00	0	0.1733			8	9
7/14	8:00	8	0.1737	0.0004	0.003	9	23
7/18	8:00	40	0.1739	0.0006	0.004	8	37
7/21	8:00	64	0.1740	0.0007	0.005	9	74
7/25	8:00	96	0.1739	0.0006	0.004	8	50
7/28	8:00	120	0.1742	0.0009	0.007	9	31
8/1	8:00	152	0.1743	0.0010	0.007	8	4
8/4	8:00	176	0.1745	0.0012	0.009	9	23
8/8	8:00	208	0.1742	0.0009	0.007	8	62
8/11	8:00	232	0.1751	0.0018	0.013	9	16
8/15	8:00	264	0.1752	0.0019	0.014	8	28
8/18	8:00	288	0.1752	0.0019	0.014	9	45
8/21	8:00	312	0.1760	0.0027	0.020	8	
						9	
						8	
---	---	300			0.017	9	
						8	
						9	
						8	

Expansion, (E) = RSn - RS

Expansion, % (E') = [(E x 25.4))343]100

$$\text{Length Change, LC (per 100 cycles)} = \frac{E' \times 100}{\text{No.of cycles completed}} = \frac{0.017 \times 100}{300} = 0.006$$

Calculated By: R.G.
Checked By: K.B. F-T Machine No.: T-3

Figure 2

1804

REPORT OF TEST
Freeze-Thaw Durability

Freeze-Thaw No. 00FT-85 **Job No.** GENERAL **Laboratory No.** 00A-1020
Date: June 15, 2000

Report on sample of Coarse Aggregate
Date sampled December 29, 1999 Date received January 6, 2000
Source of material ABC Gravel Company, Pit No. 89-23
Sampled from Stockpile @ Source Quantity represented
Submitted by J. Smith
Intended use Portland Cement Concrete Specification Grade 6AA, 1996 Std. Specs

PROPERTIES OF COURSE AGGREGATE

			F-T Pick	Production
Bulk Specific Gravity	2.68	Deleterious Particles	1 inch- d inch	1 inch- d inch
Absorption %		Soft Particles, %	0.0	0.0
24- hour soak	1.63	Chert, %	0.0	0.0
Vacuum-Saturation	1.81	Sum of Soft and Chert, %	0.0	0.0
Crushed Material In Sample	40	Coke & Coal		
Los Angeles Abrasion, % of wear	22	Unit Weight of Agg. (Dry, loose) lbs/ft;	92	

		BATCH NUMBER			
CONCRETE MIX DATA		1	2	3	Average
Date Made		6-22-95	6-29-95	7-6-95	
Slump, in		2.5	2.25	2.0	2.25
Unit Weight of Concrete, lbs/ft;		146.1	145.6	144.9	145.0
Actual Cement Content, lbs/yd;		519	517	512	516
Water-Cement Ratio, by weight		0.46	0.45	0.44	0.45
Air Content, %		6.3	7.0	7.2	6.8
Compressive Strength, psi	7 Days	4030	3890	3800	3910
	28 Days	4750	4600	4550	4630
Freeze-Thaw Durability, Expansion per 100 Cycles, %	Beam 1	0.008	0.018	0.008	
	Beam 2	0.016	0.006	0.015	
	Beam 3	0.012	0.010	0.009	
	Beam 4	0.012	0.011	0.011	0.011

Remarks: Tested for Information
Freeze-Thaw Testing conducted in T-3

MICHIGAN TEST METHOD
FOR
IDENTIFYING AGGREGATES THAT PRODUCE
CALCIUM CARBONATE PRECIPITATE

1. Scope

1.1 This method covers the determination of the presence of calcium carbonate precipitate resulting from the reaction of atmospheric carbon dioxide and carbonate-producing constituents in aggregates.

1.2 Calcium carbonate precipitate has been shown to progressively decrease water flow through geotextile filters and perforated drain lines underneath pavements.

2. Referenced Documents

2.1 *ASTM Standards*:

C 294 Standard Descriptive Nomenclature for Constituents of Natural Mineral Aggregates

C 702 Standard Practice for Reducing Field Samples of Aggregates to Testing Size

E 11 Standard Specification for Wire Cloth Sieves for Testing Purposes

3. Apparatus and Supplies

3.1 Balance with a capacity of 500 g or more, and accurate to 1 g.

3.2 Oven capable of maintaining a temperature of 110°C + 5°C.

3.3 Sieves conforming to ASTM E 11, including the No. 4 (4.75 mm) and No. 200 (75 μm) sieves.

3.4 Shallow, flat-bottom glass dishes such as 100 mm by 15 mm petri culture dishes, and miscellaneous containers.

3.5 De-ionized water.

3.6 Hydrochloric acid (1:10) - Prepare dilute hydrochloric acid using one part concentrated hydrochloric acid (sp. gr.1.19) to ten parts deionized water.

3.7 Tester, or pH indicators such as pHydrion papers capable of measuring pH range from 3.0 to 12.0.

4. Sample

4.1 The sample shall be representative of the source.

4.1.1 *Coarse Aggregate* - Separate aggregate into individual sieve fractions, if desired, for more detailed analysis. Reduce the sample test fraction to approximately 100 g, following ASTM C702. Using de-ionized water, rinse the sample test fraction over a No. 200 (75 μm) sieve, then oven-dry at 110°C + 5 °C. Crush the oven-dried sample test fraction to size passing the No. 4 (4.75 mm) sieve, retaining all material. Reduce the sample test fraction to approximately 25 g, following ASTM C702.

4.1.2 *Fine Aggregate* -- Reduce sample to approximately 25 g, following ASTM C702. Using de-ionized water, rinse sample over a No. 200 (75 μm) sieve, then oven-dry at 110°C + 5°C.

5. Procedure

5.1 Place the prepared sample in a shallow flat-bottom dish. Add de-ionized water to immerse the sample, agitating to evenly distribute the sample. Determine and record the initial pH of the leachate. Let stand exposed to room atmosphere for 24 hours. Examine the surface of the leachate and aggregate for calcium carbonate precipitate. If precipitate is present, test with a few drops of dilute hydrochloric acid. Carbonate precipitate will effervesce and dissolve.

6. Report

6.1 Report the presence or absence of calcium carbonate precipitate and the initial leachate pH. The presence of calcium carbonate precipitate and an initial leachate pH of 10 or higher indicates that an aggregate has a high potential for producing precipitate.

MICHIGAN TEST METHOD
FOR
DETERMINING PERCENTAGE OF
CRUSHED PARTICLES IN AGGREGATES

1. Scope

1.1 This method covers the determination of percent of particles, which, by visual inspection, have the essential characteristics of crushed aggregate.

2. Referenced Documents

2.1 *ASTM Standards*:

E 11 Specification for Wire-Cloth Sieves for Testing Purposes

3. Terminology

3.1 *Fractured Face* - Broken surface constituting an area equal to at least 50 percent of the projected area of the particle, as viewed perpendicular to the fractured face.

3.1.1 A fractured face is defined as being caused either by mechanical means or by nature. Natural fractures, to be accepted, must be similar to fractures produced by a crusher. The fractured face should have sharp or slightly blunted edges.

3.2 *Crushed Particle* - A particle of aggregate having at least one fractured face, or at least two fractured faces, as specified for the class of aggregate.

3.3 *Sandstone Particles* - Considered as crushed particles regardless of shape due to angular nature of sand grains in the particle.

3.4 *Crag or Recycled Portland Cement Concrete Particles* - When the largest rock fragment is less than 50 per cent of the total particle volume, the entire particle is considered crushed due to the angular nature of the sand grains or adhering concrete matrix. When the largest rock fragment is greater than 50 per cent of the total particle volume, count the particle as crushed only if the visible portion of the rock fragment has one or two fractured faces, depending on the specification provisions.

4. Significance and Use

4.1 The specifications contain requirements for percentage of crushed particles, with the purpose of maximizing shear strength in either bound or unbound aggregate mixtures. This method can be used in determining the acceptability of coarse, dense-graded, and open-graded aggregates with respect to such requirements.

NOTE 1: The intended purpose of determining percent of crushed particles is to indicate a degree of internal friction between particles.

NOTE 2: Crushed particles for the Aggregate Wear Index Determination (MTM 112) takes into account the type of particles (i.e. igneous, metamorphic, carbonate) and the qualities of these particles that cause them to wear differently. Igneous/metamorphic particles have a tendency to wear slowly causing a “rounded but angular” particle that can be found in some Western Upper Peninsula sources in significant quantity. The Aggregate Wear Index Determination has more stringent standards on what is considered a crushed particle and does not count “rounded but angular” particles as crushed. This may cause the AWI to be determined on a significantly different crush percentage than is used for any other tests or standards. Please contact Aggregate Quality Control for further clarification.

5. Apparatus

5.1 *Balance* - A balance or scale accurate to within 1 gram for all aggregates except HMA aggregates. HMA aggregates require a balance or scale accurate to within 0.1 gram.

5.2 *Sieves* - Sieves conforming to ASTM E 11.

6. Sample

6.1 The sample for testing is the aggregate used for the sieve analysis. Save and combine material retained on all sieves down to and including the -

No. 4 (4.75 mm) sieve for: a. Open Graded Aggregates
b. Aggregates for HMA Mixtures

3/8 inch (9.5 mm) sieve for: a. Dense Graded Aggregates (except for HMA mixtures)
b. Coarse Aggregates

NOTE: Remember to include this sieve when testing for gradation. It may not be required for the sieve analysis.

7. Procedure

7.1 Weigh the test sample to the nearest gram or 0.1 gram for HMA mixtures and record as "test sample weight."

7.2 Inspect and separate into crushed particles (using criteria of "one or more fractured faces" or "two or more fractured faces" as is appropriate for the aggregate under test), or uncrushed particles.

7.3 Determine the weight of crushed particles and record as "weight of crushed particles".

8. Calculation

8.1 Calculate the percentage of crushed particles as follows:

$$CP = 100\ (Wf/Wa)$$

Where: CP = percentage of particles with fractured faces (crushed particles)

Wf = weight of particles with at least the specified number of fractured faces, g

Wa = weight of test sample (or portion of test sample from which crushed particles were selected), g

9. Report

9.1 Report the percentage of crushed particles for all aggregates except HMA aggregates to the nearest 1 percent. The percentage of crushed particles for HMA aggregates will be reported to the nearest 0.1 percent.

APPENDIX

X. Guide to Features of Crushed Particles

X1. The following discussion is intended to convey the intent of this method with regard to description of crushed particles and not to define rigidly enforced limits.

X2. Angle at edge of fractured face:

The angle between two fractured faces, or between a fractured face and the remaining surface of the particle should normally be moderately abrupt, approximately 60 minimum from the plane of the fractured face.

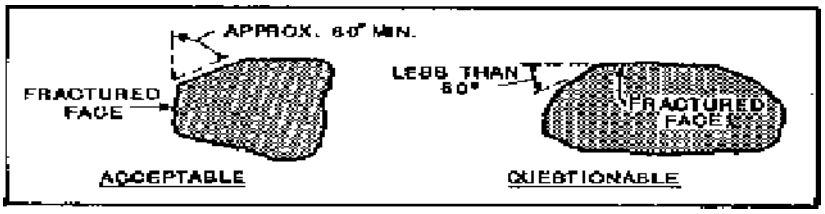

X3. Edge Condition:

The edge of a fractured face should be sharp or only slightly blunted. For example, a processed piece of crushed carbonate will have a small amount abraded from the sharp edge, making it slightly rounded. This is still acceptable.

MICHIGAN TEST METHOD
FOR
MEASURING FINE AGGREGATE ANGULARITY

1. Scope

1.1 This method covers the determination of the angularity of a fine aggregate as an overall measure of particle shape characteristics. For this test method, fine aggregate is defined as that passing the No. 4 (4.75 mm) sieve and retained on the No. 200 (75 μm) sieve. More specifically, the fine aggregate used in this method shall be that material which passes the No. 8 (2.36 mm) sieve and retained on the No. 30 (0.60 mm) sieve.

2. Applicable Documents

2.1 *ASTM Standards*:

C 136 Sieve Analysis of Fine and Coarse Aggregates

C 702 Reducing Field Samples of Aggregate to Testing Size
Practice for Random Sampling of Construction Materials

E 11 Specification for Wire-Cloth Sieves for Testing Purposes

2.2 *MDOT Publications*:

MTM 107 Sampling Aggregates

3. Significance and Use

3.1 The method provides a numerical value representing the angularity of the particles in the sample. The greater the value of the angularity, the more angular the particles.

4. Interferences

4.1 The test must be performed in an atmosphere free of vibration. The presence of vibration will provide erroneous angularity values.

5. Apparatus

5.1 *Graduated Cylinder* - A glass and/or plastic graduated cylinder having a capacity of 250 mL, 1½ inch (37 mm) inside diameter and readable to the nearest 2 mL.

5.2 *Sieves* - Sieves conforming to ASTM E 11. The following sieve sizes will be used: No. 8 (2.36 mm) and No. 30 (0.60 mm).

5.3 *Scale* - A scale or balance accurate to 0.1 gram.

5.4 *Oven* - An oven capable of maintaining a temperature of 110°C 5°C.

5.5 *Funnel* - See drawing for specification dimensions.

6. Sampling

6.1 Sample the aggregate to be tested in accordance with Methods D 3665 and D 75, and reduce to the appropriate test sample size in accordance with Method C 702.

7. Test Specimen

7.1 Obtain a dry sample of such size that it will yield at least 750 grams of the aggregate described in 7.2.

7.2 Wash the sample of aggregate through the No. 30 (0.60 mm) sieve until the water runs clear. Dry the sample to a constant weight at a temperature of 110°C 5°C. Sieve the material in accordance with Method C 136 into the following sieve fraction:

Passing	Retained
No. 8 (2.36 mm)	No. 30 (0.60 mm)

8. Procedure

8.1 Place 100 mL of distilled water into a 250 mL capacity graduated cylinder.

8.2 Weigh 200 grams of the retained No. 30 (0.60 mm) material.

8.3 Position the funnel into the cylinder such that the end of the funnel is approximately 1 inch (25 mm) above the water level.

8.4 At a steady rate, pour weighed sample into the funnel, raising the funnel as the water level rises such that the end of the funnel is always approximately 1 inch (25 mm) above the water level. This process should take approximately 10 seconds to complete. Read total volume of sample + water (Vt) to the nearest mL and record on the attached data sheet.

8.5 Read sample volume (Vsa) to the nearest ml and record on the attached data sheet.

8.6 Repeat steps 8.1 - 8.5 three times.

9. Calculations

9.1 *Calculate the angularity void ratio (e) as follows*:

$$e = \frac{\text{Volume of Voids (Vv)}}{\text{Volume of Solids (Vs)}}$$

Where: $Vs = Vt - 100\ mL$

$Vv = Vsa - Vs$

9.2 Calculate the angularity index (A.I.) as follows:

A.I. = 10 * (e,avg. - 0.60)

Where: e,avg. = average angularity void ratio from step 9.1.

10. Report

10.1 The angularity index (AI) as calculated above will be shown on the attached data summary sheet.

11. Precision

11.1 The angularity void ratio (e) can be measured by the angularity index method to within 0.05, therefore, the angularity index can be calculated to within 0.5.

ANGULARITY INDEX OF FINE AGGREGATES

Control Section _____ Sieve Fraction

Job Number _____Tested By __

Sample No. _____ Date _____

WEIGHT OF SAMPLE, g Ws	TOTAL VOLUME, mL Vt	SAMPLE VOLUME, mL Vsa	VOLUME SOLIDS, Vs = Vt-100 mL	VOLUME VOIDS, Vv = Vsa-Vs	ANGULARITY VOID RATIO E = Vv/Vs
				AVG. V. RATIO E, avg.=	

ANGULARITY INDEX = 10 * (e, avg. - 0.6) =

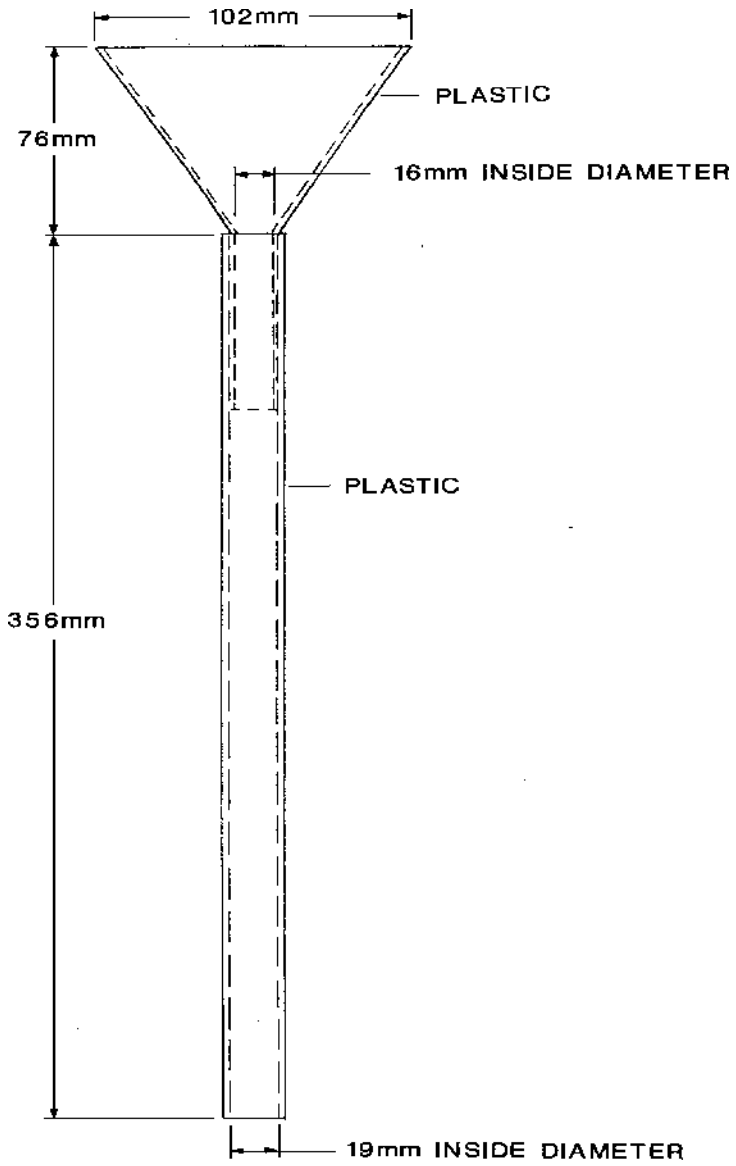
102mm
PLASTIC
76mm
16mm INSIDE DIAMETER
PLASTIC
356mm
19mm INSIDE DIAMETER

MICHIGAN TEST METHOD
FOR
SAMPLING OPEN-GRADED DRAINAGE COURSE (OGDC)
COMPACTED IN PLACE

1. Scope

1.1 This method covers the procedures for sampling open-graded drainage course (OGDC) compacted on the grade. This procedure is suitable for both unbound and asphalt stabilized OGDC.

1.2 Except as described herein, the method will be in conformance with MTM 107.

1.3 The samples obtained as described in this method are to be used to verify the grading and physical properties of the open-graded aggregate. In the case of asphalt stabilized OGDC, the samples are also to be used to verify the asphalt content.

2. Referenced Documents

2.1 ASTM Standards:

C 702 (AASHTO T 248) Practice for Reducing Field Samples of Aggregate to Testing Size

D 3665 Practice for Random Sampling of Construction Materials

2.2 MDOT Publications:

MTM 107 Sampling Aggregates

3. Sampling

3.1 Sample the OGDC compacted in place on the project.

3.2 Sampling Frequency - Obtain one composite sample across the full width of the OGDC. The length sampled should contain approximately 1000 tons. If the OGDC is placed in less than full roadway width (in the case of part width construction), sample the width as placed.

3.3 Number of Increments - Prepare each composite sample by taking 10 increments from each section.

3.4 Sampling Pattern - Use either the procedure in 3.4.1 on 3.4.2 as preferred.

3.4.1 Random Locations - Select the locations for the sample increments, both longitudinally and transversely, using a system of random numbers as described in ASTM D 3665.

3.4.2 Fixed Locations

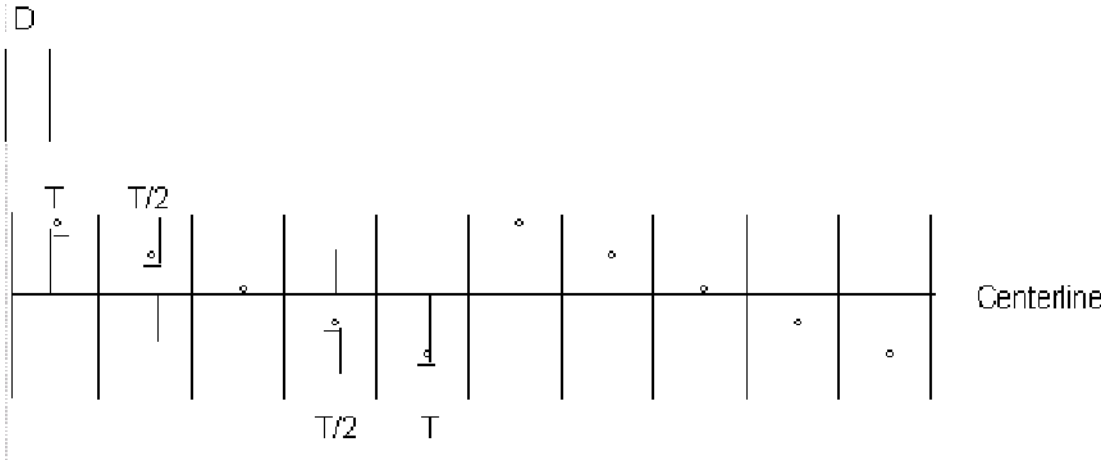

10 equal increments, usually 200 feet.

D = your choice, but same for each increment in the lot.

T = 8 feet for 2 lanes, 16 feet for 3 lanes, 22 feet for 4 lanes, 28 feet for 5 lanes.

Distances to the sampling points may be measured by pacing.

3.5 Sample Size - The composite sample shall be a minimum of 50 pounds; therefore, each increment must be at least 5 pounds. If the total of the increments provides substantially more than 50 pounds of aggregate, reduce the sample size by means of a sample splitter or quartering as described in ASTM C 702 (AASHTO T 248).

3.6 Securing Samples - Secure the sample increments at the locations selected according to 3.4. Remove all of the OGDC from the full depth, including all fines in the open-graded aggregate, but no material from underlying layers. If a geotextile fabric is used under the OGDC, use caution not to puncture the fabric.

3.6.1 In removing the material, use care to prevent larger material surrounding the hole from rolling into the sample hole, since such material will cause the increment to have a non-representative portion of large particles.

3.6.2 A metal Rainhart shield with a 6-inch diameter hole is recommended. Carefully excavate the OGDC with a spoon forming a vertical face. Be very careful to recover all the OGDC without contaminating with the underlying subbase or damaging the underlying geotextile, whichever the condition may be. Place the OGDC on a sample bag or plywood sheet. Thoroughly mix and then take one scoopful as the sample. An alternate method would be to dig a hole in the OGDC large enough to contain the scoop. Dig a vertical face at one end of the hole. Place the scoop at the bottom of the OGDC and work vertically upward filling the scoop.

4. Sample Identification and Testing

4.1 Identify the composite sample by project number, stationing (and roadway) represented by the sample, date, material description, and person taking the sample.

4.2 Submit the composite sample to the field laboratory, or district or central laboratory as directed for appropriate testing.

MICHIGAN TEST METHOD
FOR
PREPARING CONCRETE PAVEMENT CORES
TO BE TESTED FOR DURABILITY BY RAPID FREEZING IN AIR
AND THAWING IN WATER

1. Scope

1.1 This method describes the procedure for preparing concrete pavement cores to be tested for durability in rapid freezing and thawing, specifically for the comparison of concrete pavements before and after recycling. The method describes the procedure for preparing core specimens for freeze-thaw testing, including trimming, installation of gage studs, and moisture conditioning.

2. Applicable Documents

2.1 ASTM Standards:

C 295 Petrographic Examination of Aggregates for Concrete

C 490 Specification for Apparatus for Use in Measurement of Length Change of Hardened Cement Paste, Mortar, and Concrete

C 856 Petrographic Examination of Hardened Concrete

2.2 *MDOT Publications*:

MTM 121 Method of Testing Concrete Pavement Cores for Durability by Rapid Freezing in Air and Thawing in Water

3. Apparatus

The equipment for preparing concrete pavement core specimens shall include the following:

- Trim saw capable of slicing 4 inch (100 mm) diameter concrete pavement cores
- Fixture to hold cores for drilling the stud holes
- Holding tank for moisture conditioning cores before freeze-thaw testing
- Miscellaneous equipment, including drill with 1/4 inch (6.35 mm) masonry bit, wrenches, etc.

4. Supplies

The supplies for preparing concrete pavement cores shall include the following:

- Stainless steel gage studs, two per specimen, as described in ASTM C 490
- Epoxy adhesive
- Miscellaneous items, including mixing spatulas, applicators, etc.

5. Preparing Specimens

5.1 Trim each core to nominal 8 inch (200 mm) length using a trim saw. Reject broken or severely cracked cores.

5.2 Place each core in a fixture, then using a drill with a 1/4 inch (6.35 mm) masonry bit, drill holes 2 inch (13 mm) deep dead center in the core ends.

5.3 Insert epoxy adhesive and a gage stud into each prepared hole in the ends of each core. Allow epoxy to harden before moving specimen.

5.4 Submit cores to a petrographer for petrographic examination per ASTM C 295 and C 856 before freeze-thaw testing.

5.5 Receive cores after completion of petrographic examination and immerse in a holding tank maintained at a temperature of 4ºC + 0.5ºC for a minimum of 40 hours before the start of freeze-thaw testing according to MTM 121.

MICHIGAN TEST METHOD
FOR
TESTING CONCRETE PAVEMENT CORES FOR DURABILITY
BY RAPID FREEZING IN AIR AND THAWING IN WATER

1. Scope

1.1 This method describes the procedure for testing concrete pavement cores for durability in rapid freezing and thawing, specifically for the comparison of concrete pavements before and after recycling. The method uses concrete pavement core specimens prepared according to MTM 120, and describes the freeze-thaw cycling and the evaluation of the cores by the length change (expansion) procedure. This method conforms to the general requirements of ASTM C 666, Procedure B.

2. Applicable Documents

2.1 *ASTM Standards*:

C 295 Petrographic Examination of Aggregates for Concrete

C 490 Specifications for Apparatus for Use in Measurement of Length Change of Hardened Cement Paste, Mortar, and Concrete

C 666 Test Method for Resistance of Concrete to Rapid Freezing and

Thawing C 856 Petrographic Examination of Hardened Concrete

2.2 *MDOT Publications*:

MTM 120 Method for Preparing Concrete Pavement Cores to be Tested for Durability by Rapid Freezing in Air and Thawing in Water

3. Apparatus

3.1 The equipment for freeze-thaw testing shall be as described in ASTM C 666, including an automatic freezing-and-thawing apparatus as necessary for testing by Procedure B, temperature-measuring equipment, length change comparator, scales for weighing, and tempering tank.

3.2 The length change comparator shall conform to the requirements of ASTM C 490, except that the comparator and reference bar shall be set for a nominal overall length of 220 mm. Dial gage micrometers for use on the length change comparator shall meet the gradation interval and accuracy requirements for ASTM C 490 for the mm calibration requirements. Prior to the start of measurements on any specimens, the comparator should be adjusted to an appropriate length to accommodate all of the specimens to be measured for length change.

4. Freezing-and-Thawing Cycle

4.1 The nominal freezing-and-thawing cycle for this method shall consist of alternately lowering the temperature of the specimens from 40EF (4ºC) to 0EF (!18ºC) and raising it from 0EF (!18EC) to 40EF (4EC) temperature limitations of ASTM C 666. The nominal cycle length shall be 4 hours.

4.2 The thawing portion of the cycle may be extended when necessary in order to use the freeze-thaw chamber as a tempering tank while measuring specimens for length change.

5. Test Specimens

5.1 The specimens for use in this test shall be 4 inches (102 mm) diameter concrete pavement cores prepared according to MTM 120. The number of cores in a test set, nominally 6 to 12, may vary according to the condition of the specimens as received. Broken or severely cracked cores shall be excluded from freeze-thaw testing.

6. Test Procedure

6.1 Except as otherwise stated herein, all testing shall be performed according to ASTM C 666, Procedure B. The freezing-and-thawing apparatus shall be operated with all spaces filled to maintain constant load conditions. Dummy specimens shall be used if necessary to fill empty spaces.

6.2 When the specimens have been prepared and moisture-conditioned at 40EF + 1EF (4EC + 0.5EC) according to MTM 120, the initial length shall be measured. Record the initial comparator length reading in accordance with ASTM C 490. Record the initial weight of each core specimen.

6.3 Start freezing-and-thawing tests by placing the specimens in the freeze-thaw apparatus during a thawing cycle. Remove the specimens after 42 cycles of freezing and thawing and determine the specimen length and weight as in 6.2. Return the specimens to random locations in the freezing-and-thawing apparatus for subsequent 42-cycle increments.

6.4 Continue the freeze-thaw test until the specimens have been exposed to 378 cycles (9 weeks) of freezing and thawing, or until specimens break or lose end-studs.

6.5 Record the values of length and weight changes on a worksheet as shown in Figure 1.

6.6 Submit specimens for petrographic examination per ASTM C 295 and C 856 after freeze-thaw testing is completed. Petrographic examination shall include noting of broken beams and cracks resulting from the freezing-thaw testing.

7. Calculations

7.1 Calculate the expansion, in percent, for each specimen after completion of each 42-cycle increment of freezing and thawing as:

$$L_c = \frac{(l_2 - l_1)}{L_g} \times 100$$

Where:

L_c = length change of the test specimen after c cycles of freezing and thawing, %,
l_1 = length comparator reading at 0 cycles,
l_2 = length comparator reading after c cycles, and
L_g = the effective gage length between the innermost ends of the gage studs.

7.2 Enter results of computations on a data sheet as indicated in Figure 2, and determine, by interpolation, the expansions at 350 cycles.

7.3 Computations may be done by computer.

8. Report

8.1 Combine the results of the freeze-thaw tests and petrographic examinations on a report sheet as in Figure 3. Expansions of 0.06 percent or greater at 350 cycles are considered to indicate unacceptably low resistance to freezing and thawing, and shall be noted in the report. Graphs may be included. Prepare a separate report sheet for each core set, to be included in a memorandum report or project report.

Figure 1.

FREEZE-THAW MEASUREMENTS

Initial Standard:					Set No.:				Group No.:			
WEIGHT-LENGTH-SONIC												
core number	date: cycle: std:				date: cycle: std:				date: cycle: std:			
	cp*	weight	length	sonic	cp*	weight	length	sonic	cp*	weight	length	sonic
core number	date: cycle: std:				date: cycle: std:				date: cycle: std:			
	cp*	weight	length	sonic	cp*	weight	length	sonic	cp*	weight	length	sonic

Figure 2.

Date: 08/22/89
Project Number: IR 80024-24755A
Project Location: I-94 Recycle
Series I.D.: OR
Specimen Type: 100 mm Cores
Concrete Type:

EXPANSION, %

Specimen I.D.	Number of Cycles								
	42	84	126	168	210	252	294	336	378
1	0.006		0.007	0.011	0.01				
2	0.01	0.011	0.021	0.034	0.0				
3	0.09	70.009	0.01	0.014	0.0				
4	0.014		0.016	0.020	.02				
5	0.009		0.010	0160	.021				
6	0.00	70.007	0.01	0.013	0.0				
7	0.01	0.009	0.013	0.019	0.0				
8	0.00	90.009	0.011	0.017	0.0				
9	0.016		0.021	0.04	0.05				
10	0.00	90.009	0.011	0.014	0.0				
Average	0.01	0.011	0.016	0.023	0.02				

Project IR 9=024755A Westharnet 1414 Paw Paw Vitinny	Year COMSOUCted					Original Coarse Aggregate					
	1988					Type			SOurCe		F-T DF
						Gravel			344		SS (1959)
						Gravel			41.16		14 (1960)
						Gravel			39.1		7 (1959)
CCceS From Recycled Pavement	1	2	3	4	5	6	7	8	9	10	Avg.
Exp., **Percent 32 378 Cycles**	.021	.069	.019	.044	.043	.014	.038	.084	.120	.023	.042
Petrographic Examination: Corn developed few day ironStOne popcnts *and* few to moderate Cfedc3 after freeze-thaw **testing.**											
Two of ten cores. representing 20 percent ce the pavement, exceeded .06 percent expansion et 350 cyole:s.											

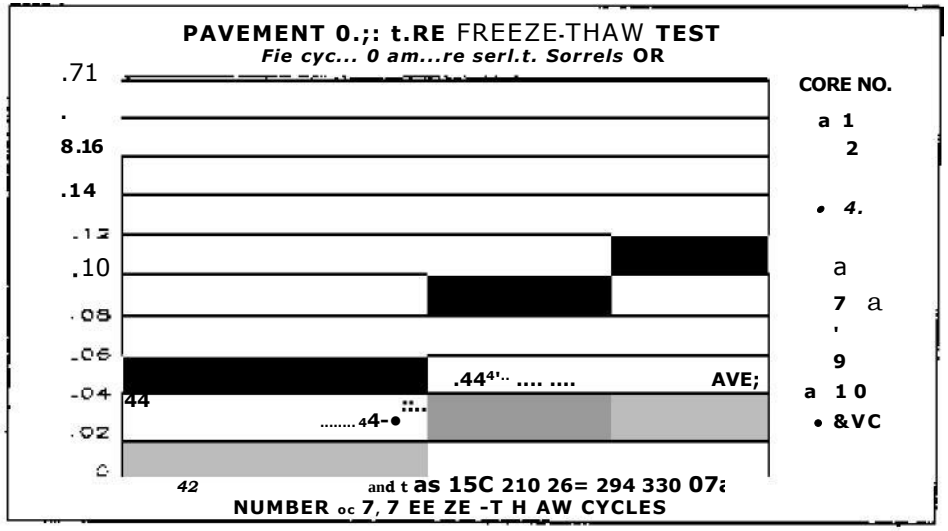

rigor e 3.

MICHIGAN TEST METHOD
FOR
DETERMINATION OF THE DRAINABILITY
CHARACTERISTICS OF GRANULAR MATERIALS

1. Scope

1.1 This test method describes the procedure used to determine the various DRAIN ABILITY characteristics of granular materials including permeability, effective porosity, and drained percent saturation attained by gravity.

2. Applicable Documents

2.1 MDOT Publications:

MDOT Density Control Handbook

Research Report No. R-805

3. Terminology

3.1 *Permeability* - The rate at which water can be conducted by a material.

3.2 *Effective Porosity* - The ratio of the volume of the voids of a soil mass that can be drained by gravity to the total volume of the mass.

3.3 *Percent Saturation* - The percent of voids in a compacted sample that are filled with water.

4. Apparatus

4.1 A permeability test assembly as shown in Fig. 1 consisting of a test cylinder with a 4 inch inside diameter, 6 inches long, with top and bottom extensions, a rigid frame, and a test stand.

4.2 Compaction assembly as shown in Fig. 2 consisting of a permeability test cylinder, top retaining ring, and a bottom support plate.

4.3 Compaction equipment including a T-180 rammer, wood block, and strike off bar.

4.4 A 100-mL graduate, a 250-mL graduate, and two 250-mL beakers.

4.5 A stopwatch or electric timer.

4.6 A balance with 3000g capacity and accurate to the nearest 0.1g.

4.7 A Speedy moisture meter.

4.8 A standard Michigan sand cone and pounding block as described in the MDOT Density

Control Handbook.

4.9 Miscellaneous hand tools, such as pans, scoops, spoons and brushes.

5. Sample

5.1 Obtain a representative sample of at least 50 pounds. If the material is above or near 100 % saturation, dry it until it becomes friable. Drying may be done in air or by use of a suitable drying apparatus, but the temperature of the sample should not exceed 140°F.

5.2 Sieve the entire sample over a : inch sieve, and discard the coarse material retained on the : inch sieve.

6. Procedure

6.1 Determine the materials maximum density and optimum moisture content using the standard one-point Michigan Cone Test Method described in the MDOT Density Control Handbook. If these values have been determined in the field for density control, then the field values can be used.

6.2 Adjust the moisture content of the material to approximately 1 or 2 percent below optimum by air drying or adding water as needed. If water is added be sure to completely mix the sample to insure a uniform moisture content.

6.3 Place the compaction assembly on the wood pounding block provided with the Michigan cone equipment. The block must rest on a rigid foundation, such as a concrete cube weighing not less than 200 pounds, or on a concrete floor. Form a specimen by compacting the material in five equal layers to give a total compacted depth of about 6 2 inches. Compact each layer with 25 uniformly distributed blows from the 10-pound T180 rammer dropping free from a height of 18 inches above the elevation of the soil. Scarify the surface of each layer before placing the next layer. Half way through the compaction procedure determine the moisture content of the remaining material with a Speedy moisture meter and record results on the data sheet. Following compaction remove the extension collar and carefully trim the compacted soil even with the top of the mold by means of a straight edge. Remove the mold from the base plate, weigh to the nearest 0.1g., and record results on the data sheet. Determine the percent compaction of the molded specimen based on the one-point cone maximum density. The specimen must be between 95 -100 percent compaction. If the specimen is outside of this range it must be remolded by first adjusting the moisture content and then increasing (higher density) or decreasing (lower density) the number of layers as required.

6.4 Place the molded specimen in the permeability test assembly and place assembly on the test stand.

6.5 Saturate the sample from the top by slowly flooding the surface of the sample with de-aired water taking care not to erode the surface. If de-aired water is not available draw a supply of hot tap water and allow it to sit at room temperature for at least 12 hours before using. Continue to increase the supply of water until the overflow outlet is reached, then adjust the supply until a constant amount of water overflow is maintained. The sample is saturated when discharge appears. If no discharge appears within 30 minutes, the material can be considered impermeable and the test can be discontinued.

6.6 Place a beaker under the sample and observe the discharge flow rate. When the discharge flow rate appears to be constant begin collecting the water at one minute intervals. Take at least three consecutive 1 - minute readings of constant flow and record both the elapsed time and quantity of water for each time interval on the data sheet. The flow is considered constant if the individual values are within 2 percent of the average value. If the quantity of water collected in one minute is less than 10 cc then the time interval can be increased as needed and must be noted on the data sheet. If no water passes through the sample after 30 minutes it is considered essentially impermeable, the test is terminated, and it is so noted on the data sheet.

6.7 After all flow readings are taken, shut off the water supply, pour the excess water from the top of the sample, and allow the sample to gravity drain. When the length of time between drops of water coming out of the bottom of the sample is greater than one minute the sample is considered gravity drained. Immediately remove the sample from the mold and determine it's moisture content from a sample obtained from the middle of the specimen. Record this moisture content on the data sheet where indicated.

7. Calculations

Perform the following calculations and record the results on the data sheet where indicated.

7.1 Permeability, K (ft/day)

$$K = \frac{(Q_t)(L)}{(h)(A)(T_t)} \times C$$

Q_t = Total quantity of water measured, cc

L = Length of sample, cm

h = Head of water on sample, cm
(Measured from the overflow spout to the top of the porous stone)

A = Cross section area of sample, cm^2

T_t = Total time, minutes

C = 47.24, conversion factor to change mm/min to ft/day

7.2 Volume of Solids, V_s

$$V_s = \frac{d}{G_s \times 1000}$$

d = Dry density of test sample, g/cc

G_s = Specific gravity of test material
(Assumed to be 2.68 unless determined by testing to be otherwise.)

7.3 Volume of Water after Gravity Drained, V_w

$$V_w = \frac{d \times W_e}{1000}$$

W_e = Gravity drained moisture content expressed as A decimal.

7.4 Volume of Voids, V_v

$$V_v = 1 - V_s$$

7.5 Gravity Drained Percent Saturation, % Sat.

$$\% \text{ Sat.} = \frac{V_w \times 100}{V_v}$$

7.6 Effective Porosity, N_e

$$N_e = 1 - V_s\,[(G_s \times W_e) + 1]$$

7.7 Permeability, Effective Porosity Ratio

$$\text{Ratio} = \frac{K}{N_e}$$

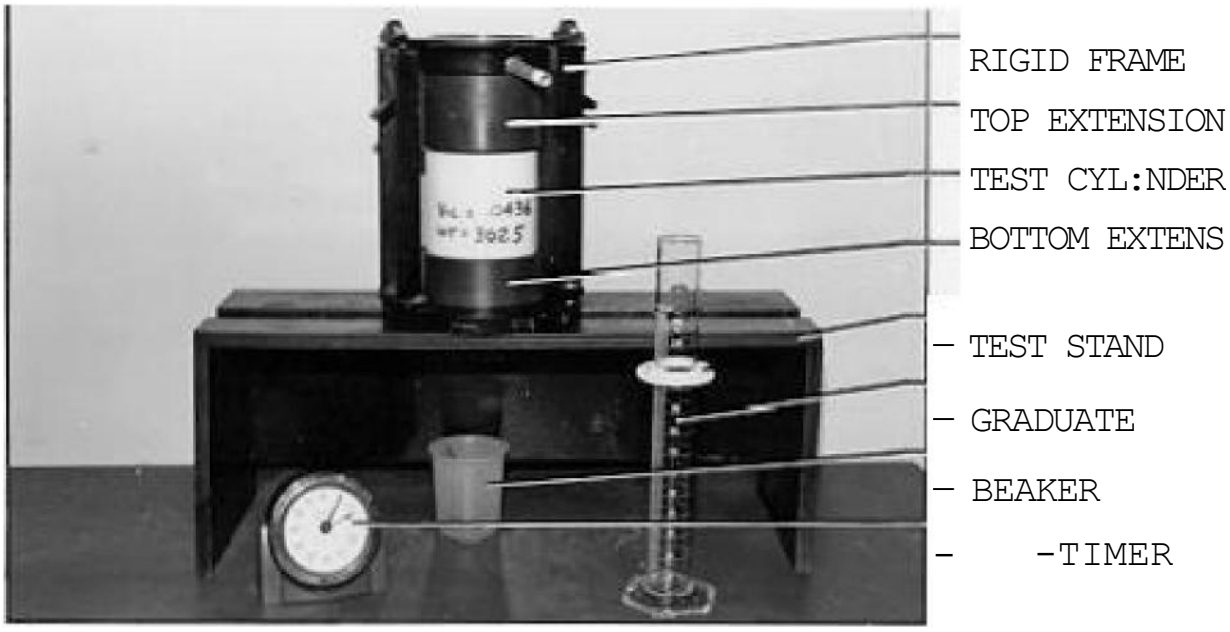

Figure 1. Permeability test assembly.

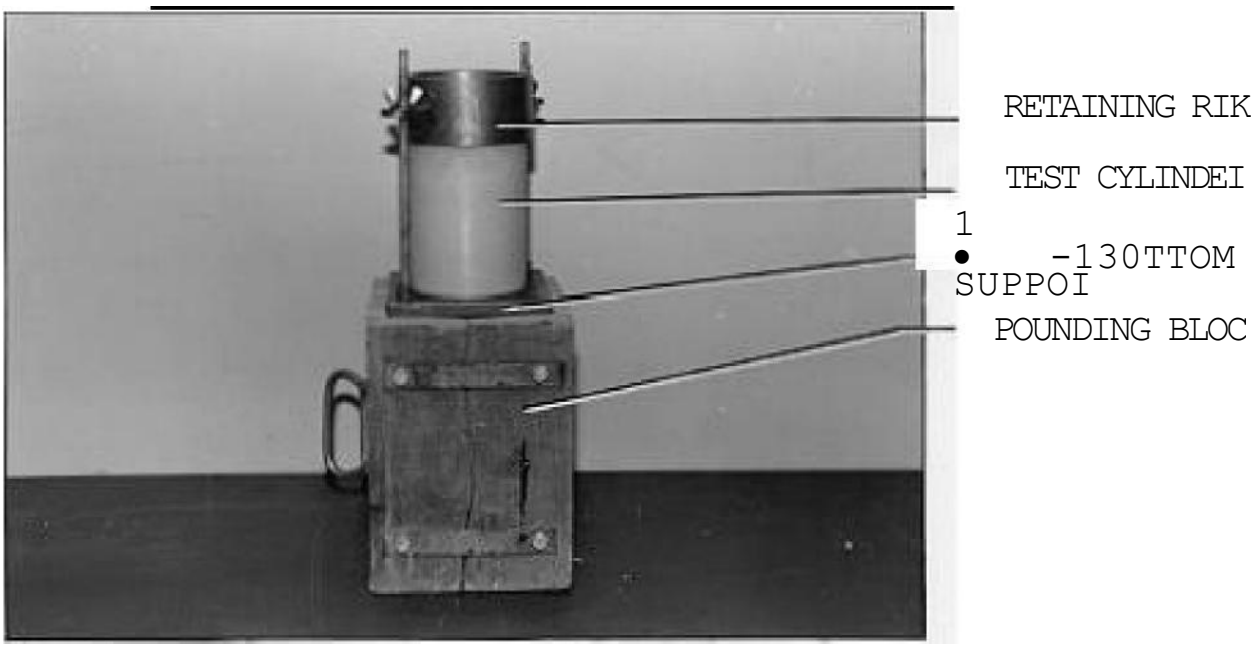

Figure 2. Permeability compaction assembly.

Michigan Department
of Transportation
1005 (5/95)

FIELD PERMEABILITY DATA

DATE	OPERATOR	PROJECT NO.

TEST ID	MOLD + WET SOIL gms.	WT. MOLD, gms.	WT. WET SOIL, gms.	WT. WET SOIL Kg.	VOL. MOLD Cu. M	WET DENSITY Kg/m³	MOIST. CONTENT, FROM SPEEDY	DRY DENSITY, Kg/m³	QT. TOTAL FLOW, mm³	L LENGTH OF SAMPLE, mm	h HEAD, mm	A CROSS SECT. AREA mm²	Tt TOTAL TIME, min.	k PERM mm/min	k PERM m/day	SPECIFIC GRAVITY
COL. NOS.	1	2	3	4	5	6	7	8	9	10	11	12	13	14	15	16

TEST DATA

TEST ID	FLOW ML	TIME MIN.	TEST ID	FLOW ML	TIME MIN.	TEST ID	FLOW ML	TIME MIN.

TEST ID	Vs VOLUME SOLIDS	Vv VOLUME VOIDS	We DRAINED MOIST. CONTENT, SPEEDY	Vw VOLUME WATER	% SATURA. DRAINED	e VOID RATIO	Ne EFFECT POROSITY	k/ne RATIO
	17	18	19	20	21	22	23	24

CALCULATIONS

Col. 4 = Col. 3 / 1000

Col. 6 = Col. 4 / Col. 5

Col. 8 = Col. 6 / (Col. 7 + 1)

Col. 9 = Flow, ML x 1000

Col. 14 = (Col. 9) (Col. 10) / (Col. 11) (Col. 12) (Col. 13)

Col. 15 = Col. 14 x 1.44

Col. 17 = Col. 8 / Col. 16 x 1000

Col. 18 = 1 - Col. 17

Col. 20 = (Col. 8) (Col. 19) / 100

Col. 21 = Col. 20 / Col. 18 x 100

Col. 22 = Col. 18 / Col.

Col. 23 = 1 - Col. 17 [(Col. 19) (Col. 16) + 1]

Col. 24 = Col. 15 / Col. 23

Not es: Col. 7 and Col. 19 Mo ist ure cont ent expr essed as a decimal. Col. 16 is assumed t o be 2.68 unless det ermined by t est ing t o be ot herw ise.	Mat erial Requirement s: Col. 21 Maximum allow able percent sat urat ion = 95% Col. 15 Minimum allo w able Permeabilit y.	Col. 24 Minimum allow able k/ne Rat io Circle all values failing to meett hese requirement	s.

REMA RKS:

MICHIGAN TEST METHOD
FOR
DETERMINATION OF THE DRAINABILITY
CHARACTERISTICS OF GRANULAR MATERIALS

1. Scope

1.1 This test method describes the procedure used to determine the various DRAIN ABILITY characteristics of granular materials including permeability, effective porosity, and drained percent saturation attained by gravity.

2. Applicable Documents

2.1 MDOT Publications:

MDOT Density Control Handbook

Research Report No. R-805

3. Terminology

3.1 *Permeability* - The rate at which water can be conducted by a material.

3.2 *Effective Porosity* - The ratio of the volume of the voids of a soil mass that can be drained by gravity to the total volume of the mass.

3.3 *Percent Saturation* - The percent of voids in a compacted sample that are filled with water.

4. Apparatus

4.1 A permeability test assembly as shown in Fig. 1 consisting of a test cylinder with a 102 mm inside diameter, 152 mm long, with top and bottom extensions, a rigid frame, and a test stand.

4.2 Compaction assembly as shown in Fig. 2 consisting of a permeability test cylinder, top retaining ring, and a bottom support plate.

4.3 Compaction equipment including a T-180 rammer, wood block, and strike off bar.

4.4 A 100-mL graduate, a 250-mL graduate, and two 250-mL beakers.

4.5 A stopwatch or electric timer.

4.6 A balance with 3000g capacity and accurate to the nearest 0.1g.

4.7 A Speedy moisture meter.

4.8 A standard Michigan sand cone and pounding block as described in the MDOT Density Control Handbook.

4.9 Miscellaneous hand tools, such as pans, scoops, spoons and brushes.

0. Sample

5.1 Obtain a representative sample of at least 23 kg. If the material is above or near 100 % saturation, dry it until it becomes friable. Drying may be done in air or by use of a suitable drying apparatus, but the temperature of the sample should not exceed 60 ^{o}C.

5.2 Sieve the entire sample over a 19 mm sieve, and discard the coarse material retained on the 19 mm sieve.

6. Procedure

6.1 Determine the materials maximum density and optimum moisture content using the standard one-point Michigan Cone Test Method described in the MDOT Density Control Handbook. If these values have been determined in the field for density control, then the field values can be used.

6.2 Adjust the moisture content of the material to approximately 1 or 2 percent below optimum by air drying or adding water as needed. If water is added be sure to completely mix the sample to insure a uniform moisture content.

6.3 Place the compaction assembly on the wood pounding block provided with the Michigan cone equipment. The block must rest on a rigid foundation, such as a concrete cube weighing not less than 91 kg, or on a concrete floor. Form a specimen by compacting the material in five equal layers to give a total compacted depth of about 165 mm. Compact each layer with 25 uniformly distributed blows from the 4.5 kg T180 rammer dropping free from a height of 457 mm above the elevation of the soil. Scarify the surface of each layer before placing the next layer. Half way through the compaction procedure determine the moisture content of the remaining material with a Speedy moisture meter and record results on the data sheet. Following compaction remove the extension collar and carefully trim the compacted soil even with the top of the mold by means of a straight edge. Remove the mold from the base plate, weigh to the nearest 0.1g., and record results on the data sheet. Determine the percent compaction of the molded specimen based on the one-point cone maximum density. The specimen must be between 95 -100 percent compaction. If the specimen is outside of this range it must be remolded by first adjusting the moisture content and then increasing (higher density) or decreasing (lower density) the number of layers as required.

6.4 Place the molded specimen in the permeability test assembly and place assembly on the test stand.

6.5 Saturate the sample from the top by slowly flooding the surface of the sample with de-aired water taking care not to erode the surface. If de-aired water is not available draw a supply of hot tap water and allow it to sit at room temperature for at least 12 hours before using. Continue to increase the supply of water until the overflow outlet is reached, then adjust the supply until a constant amount of water overflow is maintained. The sample is saturated when discharge appears. If no discharge appears within 30 minutes, the material can be considered impermeable and the test can be discontinued.

6.6 Place a beaker under the sample and observe the discharge flow rate. When the discharge flow rate appears to be constant begin collecting the water at one minute intervals. Take at least three consecutive 1 - minute readings of constant flow and record both the elapsed time and quantity of water for each time interval on the data sheet. The flow is considered constant if the individual values are within 2 percent of the average value. If the quantity of water collected in one minute is less than 10 mL then the time interval can be increased as needed and must be noted on the data sheet. If no water passes through the sample after 30 minutes it is considered essentially impermeable, the test is terminated, and it is so noted on the data sheet.

6.7 After all flow readings are taken, shut off the water supply, pour the excess water from the top of the sample, and allow the sample to gravity drain. When the length of time between drops of water coming out of the bottom of the sample is greater than one minute the sample is considered gravity drained. Immediately remove the sample from the mold and determine it's moisture content from a sample obtained from the middle of the specimen. Record this moisture content on the data sheet where indicated.

7. Calculations

Perform the following calculations and record the results on the data sheet where indicated.

7.1 Permeability, K (m/day)

$$K = \frac{(Q_t)\,(L)}{(h)\,(A)\,(T_t)} \times C$$

Q_t = Total quantity of water measured, mm^3

L = Length of sample, mm

h = Head of water on sample, mm
(Measured from the overflow spout to the top of the porous stone)

A = Cross section area of sample, mm^2

T_t = Total time, minutes

C = 1.44, conversion factor to change mm/min to m/day

7.2 Volume of Solids, V_s

$$V_s = \frac{}{G_s \; 1000}$$

d = Dry density of test sample, k^3/m^3

G_s = Specific gravity of test material
(Assumed to be 2.68 unless determined by testing to be otherwise.)

7.3 Volume of Water after Gravity Drained, V_w

$$V_w = \frac{d \times W_e}{1000}$$

W_e = Gravity drained moisture content expressed as A decimal.

7.4 Volume of Voids, V_v

$$V_v = 1 - V_s$$

7.5 Gravity Drained Percent Saturation, % Sat.

$$\% \text{ Sat.} = \frac{V_w \times 100}{V_v}$$

7.6 Effective Porosity, N_e

$$N_e = 1 - V_s\,[(G_s \times W_e) + 1]$$

7.7 Permeability, Effective Porosity Ratio

$$\text{Ratio} = \frac{K}{N_e}$$

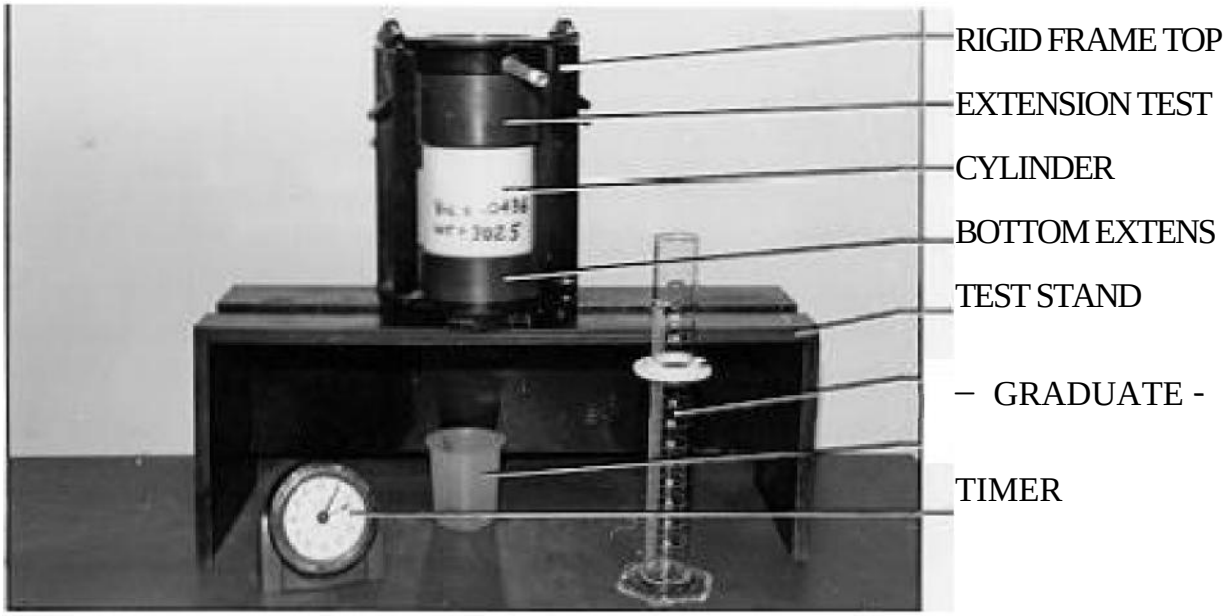

Figure 1. Permeability test assembly.

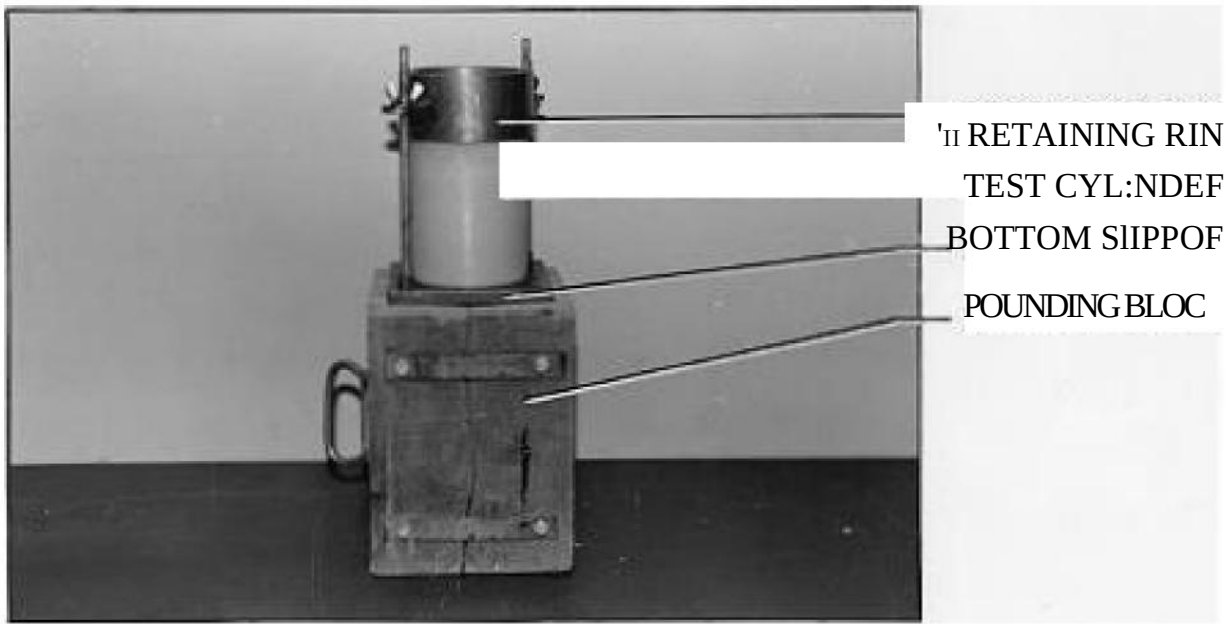

Figure 2. Permeability **compaction assembly.**

Michigan Department
of Transportation
1005 (5/95)

FIELD PERMEABILITY DATA

DATE	OPERATOR	PROJECT NO.

TEST ID	MOLD + WET SOIL gms.	WT. MOLD, gms.	WT. WET SOIL,	WT. WET SOIL Kg.	VOL. MOLD Cu. M	WET DENSITY	MOIST. CONTENT, FROM SPEEDY	DRY DENSITY, Kg/m³	QT. TOTAL FLOW, mm³ OF	L LENGTH SAMPLE, mm	h HEAD, mm	A CROSS SECT. AREA mm²	Tt TOTAL TIME, min.	k PERM mm/min	k PERM m/day	SPECIFIC GRAVITY
COL. NOS. →	1	2	3	4	5	6	7	8	9	10	11	12	13	14	15	16

TEST ID	Vs VOLUME SOLIDS	Vv VOLUME VOIDS	We DRAINED MOIST. CONTENT, SPEEDY	Vw VOLUME WATER	% SATURA.	e VOID RATIO	Ne EFFECT POROSITY	k/ne RATIO
COL. NOS. →	17	18	19	20	21	22	23	24

TEST DATA

TEST ID	FLOW ML	TIME MIN.	TEST ID	FLOW ML	TIME MIN.	TEST ID	FLOW ML	TIME MIN.

CALCULATIONS

Col. 4 = Col. 3 / 100 0

Col. 6 = Col. 4 / Col. 5

Col. 8 = Col. 6 / Col. 7 + 1

Col. 9 = Flow, ML x 1000

Col. 14 = (Col. 9) (Col. 10) / (Col. 11) (Col. 12) (Col. 13)

Col. 15 = Col. 14 x 1.44

Col. 17 = Col. 8 / Col. 16 x 1 000

Col. 18 = 1 - Col. 17

Col. 20 = (Col. 8) (Col. 19) / 10 00

Col. 21 = Col. 20 / Col. 18 x 1 00

Col. 22 = Col. 18 / Col. 17

Col. 23 = 1 - Col. 17 [(Col. 19) (Col. 16) + 1]

Col. 24 = Col. 15 / Col. 23

Notes:
Col. 7 and Col. 19 Moisture content expressed as a decimal.
Col. 16 is assumed to be 2.68 unless determined by test ing to be otherwise.

Material Requirements:
Col. 21 Maximum allowable percent saturation = 95%
Col. 15 Minimum allowable Permeability.
k = _____ m/day

Col. 24 Minimum allowable k/ne Ratio = _____

Circle all values failing to meet these requirements.

REMARKS

MTM 122M (metric); MTM 122E (English)

MTM 122E-01

MICHIGAN TEST METHOD
FOR
FIELD DETERMINATION OF THE
DRY UNIT WEIGHT (LOOSE MEASURE) OF COARSE AGGREGATES

1. Scope

1.1 This test method describes the field procedure for determining the unit weight of those coarse aggregates normally specified in concrete mix designs.

1.2 This method may be used to quickly determine the unit weight of the aggregates using their existing moisture content, provided there is no free water or glisten on the exposed aggregate surfaces.

1.3 Except for the following modifications or additions, the determination of the unit weight conforms to ASTM C-29.

2. RelatedDocuments

2.1 ASTM C 29 Test method for Unit Weight and Voids in Aggregates.

2.2 Procedures for Aggregate Inspection Manual - Test Method for Moisture Determination.

3. Procedure

3.1 The shoveling procedure section of ASTM C 29 is to be followed.

3.2 Weigh the unit weight sample to the nearest 0.1 kg.

3.3 The moisture content is to be determined as described in the Procedures for Aggregate Inspection Manual, and sampled from the material after the unit weight has been performed. If the moisture content is to be determined later, the moisture sample is to be placed in an airtight container.

4. Calculation

4.1 Calculate the dry unit weight using the worksheet on page 2 of this MTM.

4.2 Round the dry unit weight to the nearest kilogram/cubic meter, note both values on the sample I.D. when submitting coarse aggregate for concrete mix design.

WORKSHEET FOR UNIT WEIGHT COMPUTATION

MATERIAL _____ **PIT #** _____

WET WEIGHT OF SAMPLE

T otal weight (3 samples)

#1 _____ kg

#2 _____ kg _____ kg

#3 _____ kg Average = Total / 3 = (a)

UNIT WEIGHT (WET)

(a) Average weight (incl. measure) _____ kg

(b) Weight of measure _____ kg

(c) Wet weight (a - b) _____ kg

(d) Volume of measure _____ m3

(e) Unit weight, wet (c / d) _____ kg/m^3 (nearest 0.01) **MOISTURE CONTENT DETERMINATION**

(f) Weight of sample (wet) _____ gms

(g) Weight of sample (dry) _____ gms

(h) Weight of moisture (f - g) _____ gms

(i) Moisture factor (h / g) _____ (nearest 0.0001)

(j) Moisture content (i x 100) _____ %(nearest 0.01)

UNIT WEIGHT (DRY)

$\frac{(e)}{1+(i)}$ = _____ kg/m **(English Conversion from Metric)**

(kg/m)/ 16.02 = lbs/ft

REMARKS:

TESTED BY: **DATE:**

MICHIGAN TEST METHOD
FOR
DETERMINING AGGREGATE DURABILITY
BY UNCONFINED FREEZING AND THAWING

1. Scope

1.1 This method covers a procedure for determining the durability of unconfined aggregate by rapid freezing and thawing.

1.2 As determined by this test, the durability of a sample is a measure of the mass loss after 300 cycles of unconfined freezing in air and thawing in water.

1.3 The test was developed for evaluating aggregates such as railroad ballast samples that contain particle sizes too large for conventional testing according to MTM 115. The test can be used for screening evaluation of aggregates submitted for freeze-thaw tests.

2. Referenced Documents

2.1 MDOT Standards:
Michigan Test Method 115 Method of Testing Concrete for Durability by Rapid Freezing in Air and Thawing in Water.

2.2 AASHTO Standards:
T 103 Standard Method of Test for Soundness of Aggregates by Freezing and Thawing.

2.3 ASTM Standards:
E 11 Specification for Wire Cloth Sieves for Testing Purposes.
C 666 Test Method for Resistance of Concrete to Rapid Freezing and Thawing.

3. Apparatus

3.1 *Freezing Equipment* - The equipment for freezing and thawing shall be as described in ASTM C 666, including an automatic freezing and thawing apparatus as necessary for testing by Procedure B, temperature-measuring equipment, and tempering containers.

3.2 *Mechanical sieve shaker* - The equipment shall have a timer to control sieving time.

3.3 *Sample Containers* - The sample containers shall be of non-corroding, perforated material, with size of openings adequate to permit free drainage of water but small enough to retain the sample and any subsequent fractional loss after testing. The use of cloth liners is recommended to prevent loss of disintegrated sample material from the containers.

3.4 *Sieves* - The sieves used shall meet the requirements of ASTM E11.

3.5 *Balance* - Balance shall be readable and accurate to 0.5 g or 0.1% of the test load, whichever is greater, at any point in the range of use.

3.6 *Drying oven* - The drying oven shall provide a free circulation of air throughout the oven and shall be capable of maintaining a temperature of 110°C 5 C.

4. Sample

4.1 Aggregate for the test shall consist of particles finer than the 2 2 inches (63.0 mm) sieve and coarser than the No. 4 (4.75 mm) sieve.

5. Preparation of Sample

5.1 The sample of aggregate shall be thoroughly washed and dried to constant mass at a temperature of 110 C 5 C and shall be separated into size fractions by grading with a mechanical shaker to refusal (until no particles pass the sieve). Particles sticking in the mesh shall not be used for the test. Amounts retained on the individual sieves shall be recorded to determine the original gradation of the sample as shown in the example in Table 1.

TABLE 1.
Example Gradation of Sample

Sieve Opening		**Grading of Sample, Amount Retained**	
inches	**mm**	**g**	**%**
2	50.0		
1 2	37.5	1340	20
1	25.0		
:	19.0	3015	45
2	12.5		
d	9.5	1541	23
No. 4	4.75	804	12
Totals		6700	100

5.2 The required mass for each fraction shall be weighed out and placed in separate containers for the test. Quantities required for the test fractions are shown in Table 2. Several containers may be required for the larger size fractions.

TABLE 2.
Sieve Fractions and Quantities Before Test

Passing Sieve Opening		Retained Sieve Opening		Test Fraction Quantity Required	Test Fraction Quantities Used for Example
inches	mm	inches	mm	g	g
2 2	63.0	2	50.0	6500 V 350	
2	50.0	1 2	37.5	5000 V 250	4883
1 2	37.5	1	25.0	3500 V 150	
1	25.0	:	19.0	2500 V 100	2525
:	19.0	2	12.5	1500 V 50	
2	12.5	d	9.5	1000 V 30	10008
d	9.5	No. 4	4.75	300 V 10	298

6. Procedure

6.1 The samples in tempering containers shall be immersed in water at a temperature of approximately 4EC V 5EC for 24 hours without vacuum treatment prior to the start of freezing and thawing.

6.2Immediately after the 24-hour soak period the samples shall be placed in the automatic freeze-thaw apparatus.

7. Cycles of Freezing and Thawing

7.1 Alternate freezing and thawing shall be repeated per MTM 115 until the samples have been subjected to a total of 300 cycles.

8. Determination of Mass Loss

8.1 To prevent large percentage losses due to minor changes in particle size, as resulting from loss of material from sharp edges, the sieves used for regrading after freeze-thaw testing are slightly smaller than those used for preparing the sample fractions, per AASHTO T 103. Sieves used for regrading the test fractions after freeze-thaw testing are shown in Table 3.

8.1.1 After completion of the final cycle, the sample fractions shall be dried to constant mass at 110 EC V 5 EC, then regraded, using a mechanical sieve shaker, to determine the individual sample fraction mass losses.

8.1.2 Record the amounts retained on the designated sieves after testing, as shown in the example in Table 3.

TABLE 3.
Example Sieve Sizes For Regrading After Test

Sieve Opening				Example Test Fractions Retained
Before Test		After Test		
inches	mm	inches	mm	g
2	50.0	1 :	45.0	
1 2	37.5	1 3	31.5	4649
1	25.0	f	22.4	
:	19.0	e	16.0	2323
2	12.5	7/16	11.2	
d	9.5	5/16	8.0	911
No. 4	4.75	No. 5	4.00	265

8.1.3 Compute the sample fraction mass losses from the sample fraction weights before and after testing, as shown in the example in Table 4.

TABLE 4.
Example Computation of Sample Fraction Mass Losses

Sieve Before Test		Quantity Retained Before Test	Sieve After Test		Quantity Retained After Test	Sample Fraction Mass Loss After Test	
inches	mm	g	inches	mm	g	g	%
2	50.0		1 :	45.0			
1 2	37.5	4883	1 3	31.5	4649	234	4.8
1	25.0		f	22.4			
:	19.0	2525	e	16.0	2323	202	8.0
2	12.5		7/16	11.2			
d	9.5	1008	5/16	8.0	911	97	9.6
No. 4	4.75	298	No. 5	4.00	265	33	11.1

9.1.1 Compute the gradation-weighted sample mass loss from the sample gradation and the sample fraction mass losses as shown in the example in Table 5.

TABLE 5.
Example Computation of Gradation-Weighted Sample Mass Loss

Sieve Before Test		**Original Sample Gradation Amount Retained**	**Sample Fraction Mass Loss**	**Gradation - Wtd. Sample Mass Loss**
inches	mm	%	%	%
2	50.0			
1 2	37.5	20	4.8	1.0
1	25.0			
:	19.0	45	8.0	3.6
2	12.5			
d	9.5	23	9.6	2.2
No. 4	4.75	12	11.1	1.3
Totals		100		8

9. Report

9.1 The report shall include the following information:
- Gradation of the original sample
- Mass of each fraction before testing
- Actual loss in each fraction, expressed as a percentage of the original mass of the fraction, reported to the nearest 0.1 percent
- Total gradation-weighted loss, reported to the nearest whole number
- Types of failure, such as random cracking, splitting along laminations, or disintegration
- Test procedure used

MICHIGAN TEST METHOD
FOR
DETERMINATION OF IOWA PORE INDEX OF COARSE AGGREGATES

1. Scope

1.1 This practice describes the procedure for determining the Iowa Pore Index of coarse aggregates for use in portland cement concrete.

1.2 It may be necessary to perform a petrographic examination and sort the aggregate into appropriate lithological groupings for detailed analysis of the material.

1.3 The test is used as an investigative screening method rather than for specification enforcement. It is intended to supplement data from field service records, petrographic examinations, and acceptance tests of aggregate used in concrete.

2. Applicable Documents

2.1 *Applicable Standards*:

C 136 Sieve Analysis of Fine and Coarse Aggregates
C 295 Petrographic Examination of Aggregates for Concrete
E 11 Wire Cloth Sieves for Testing Purposes

2.2 *Other References*:

Iowa Pore Index Test, Iowa Dept. of Transportation, 1980
Transportation Research Record 853

3. Significance and Use

3.1 This practice was developed as a rapid screening procedure for the evaluation of aggregates submitted for freeze-thaw testing.

3.2 High freeze-thaw dilation measurements have been recorded for concrete specimens containing vacuum-saturated, absorptive aggregates that register high primary load values (water uptake during the first minute of absorption) during the Iowa Pore Index test.

3.3 Aggregates that record pore index values in excess of 27 have in turn been correlated with the development of D-cracking in concrete pavements.

3.4 Therefore, if aggregate samples are found to have pore index value greater than 27, there is a high probability that these aggregates may contribute to D-cracking in concrete pavements.

4. Apparatus

4.1 Pore Index meter with calibrated vertical cylinder for measuring aggregate water uptake during pressure-saturation.

4.1.1 A large pore meter chamber with six-liter capacity that will hold approximately 9000g of aggregate is used to precondition aggregates for separation into absorptive versus nonabsorptive types for pore index evaluation.

4.1.2 A small pore meter with 0.8 liter capacity that allows rapid filling and pressurization is used for the pore index determinations.

4.2 Balance, with capacity of 4000 g or more, accurate to 1 g.

4.3 Sieves conforming to ASTM E-11: one ： inch (19 mm), and one 2 inch (12.5 mm).

4.4 Stereoscopic microscope.

4.5 Oven capable of maintaining a temperature of 110 + 5 C.

4.6 Accessory equipment and utilities, including water and compressed air lines, timer and calculator.

5. Sample Preparation

5.1 Separate by sieving approximately 16 kg of 2 inch (12.5 mm) to ： inch (19 mm) size particles from a coarse aggregate sample.

5.2 Sort sample into rock type categories and record petrographic information as shown on page four.

Note: If the sample contains substantial amounts of deeply weathered or absorptive material in any rock type category, the procedure in 5.4 should be followed, and separate pore index determinations should be conducted on the subcategories.

5.3 Oven dry the carbonate fraction.

5.4 Further separate the carbonates into dense and absorptive subcategories by pressure-saturation in the large pore index chamber for 15 minutes at 35 psi (241 kPa), following the pore index determination procedure described in 6.3 and 6.4. Immediately towel-dry the aggregate and blow compressed air over them. The surfaces of dense particles will appear dry and surfaces of absorptive particles will appear damp.

5.5 Oven dry the carbonate fractions separated by the procedure in 5.4, then weigh and record on worksheets as shown on page four.

6. Procedure

6.1 Make preliminary calculations on worksheets before starting pore index tests, as shown on page four.

6.2 Place a weighed, oven-dried sample fraction in the pore index chamber, then attach lid and lines for air and water.

6.3 Open air bleeder valve, then open water line and fill meter. Agitate to expel trapped air bubbles while filling, until water level is at 0.0 in the vertical cylinder.

6.4 Quickly close water valves and air bleeder valve, then open compressed air valve and start timer. Maintain 35 psi (241 kPa) air pressure during the test by adjusting the air pressure controller if necessary.

6.5 Record water level readings at 1-minute and 15-minutes as shown on the worksheet on page 4. Water level readings at 15, 30, 45 seconds and intermediate 1-minute intervals may be recorded to generate absorption curves if desired.

6.6 Repeat the pore index determination procedure for the sample fractions using quantities of aggregate sufficient to fill the pore index chamber.

Note: For a highly absorptive aggregate, use a smaller quantity to prevent complete loss of water from the vertical cylinder during the test.

7. Computations

7.1 Determine the Iowa Pore Index value by subtracting the 1-minute reading from the 15-minute reading and then performing the computation as shown on the worksheet on page 4 using the factors described in sections 9 and 10 below.

8. Report

8.1 Report the Iowa Pore Index determination results on a test report sheet or in a summary report. Include the pore index values and corresponding percentages of the constituents in the sample shown on page 4. Primary load values (water uptake during the first minute), and total amounts of water uptake during the test may be included for additional information. The report may include a statement of Iowa Pore Index criteria for interpretation of the test results.

ANNEX
(Mandatory Information)

A1. Determination of the Pore Meter Expansion Factor (EF)

A.1.1 To determine the expansion factor (EF) fill the pore meter with water until the water level is at 0.0, then close all valves and pressurize to 35 psi (241 kPa). The expansion factor is the water level reading during pressurization.

A2. Determination of the Pore Meter Calibration Factor (CF)

A.2.2 To determine the calibration factor (CF) fill the pore meter until the water level is at 0.0, then drain the water into a graduated cylinder until the bottom scale reading is reached. The amount of water removed from the vertical graduated cylinder of the pore meter is used to calculate the ml per division of the pore meter scale.

PETROGRAPHIC ANALYSIS WORKSHEET
FOR
IOWA PORE INDEX DETERMINATION

Sample: _____
Sample No: _____
Particle Size: _____
Date Tested: _____

Rock Type	Weight, g	Sample Content,	?Soft@, %
Igneous/Metamorphic, *Dense*	.	.	.
* Ig/Metamorphic, *Absorptive*			
Sedimentary	.	.	.
Carbonates, *Dense*			.
Carbonates, *Absorptive*	.	.	.
Sandstone, Nonfriable.	.	.	.
* Sandstone, Friable....	.	.	.
* Siltstone			.
* Shale			.
* Clay Ironstone			.
Chert			.
Totals			.

Total ASoft@ + Chert ..... _____

Asterisks indicate rock types classified as soft and nondurable in

service. REMARKS:

_____
_____
_____
_____
_____
_____
_____

WORKSHEET FOR
IOWA PORE INDEX DETERMINATION

Sample: _____
Sample No.:
Sample Wt., g. (oven-dry) : _____
Particle Size: _____
Date Tested: _____

Elapsed Time	Water Level	Water Level - EF	Absorption, ml Per 9000 g Sample
00 sec.	0.0	0.0	0.0
15	.	.	.
30	.	.	.
45 1	.	.	.
min.	.	.	.
2	.	.	.
3	.	.	.
4	.	.	.
5	.	.	.
6	.	.	.
7	.	.	.
8	.	.	.
9	.	.	.
10	.	.	.
11	.	.	.
12	.	.	.
13	.	.	.
14	.	.	.
15	.	.	.

Absorption, ml per 9000 g Sample = (WL-EF)* (CF*WF)

EF = Pore Meter Expansion Factor ..... _____
CF = Pore Meter Calibration Factor ..... _____
WF = Sample Wt. Factor = 9000 g/Sample Wt.,g .... _____
(CF*WF) ..... _____
Pore Index = Abs @ 15 Min. - Abs @ 1 Min ..... _____

Tested in _____liter chamber.

REMARKS:

MICHIGAN TEST METHOD
FOR
LEACHATE DETERMINATION OF IRON BLAST FURNACE SLAG USED FOR LIGHTWEIGHT AGGREGATE FILL

1. Scope

1.1 This method covers the procedure for sampling and testing iron blast furnace slag for determination of leachate from the aggregate.

1.2 This procedure will apply to all uses of slag except for use in HMA or PCC.

2. Applicable Documents

2.1 MTM 113 - Michigan Test Method for Sampling Aggregates

2.2 AASHTO Standards:

M 92 Wire Cloth Sieves for Testing Purposes
M 231 Standard Specifications for Weighing Devices Used in Testing Materials
T 248 Reducing Samples of Aggregate to Testing Size

2.3 ASTM Standards:

D 1193Specification for Reagent Water
E 70 pH of Aqueous Solutions with the Glass Electrode
E 832 Specification for Laboratory Filter Paper
E 960 Specification for Laboratory Glass Beakers

3. Significance and Use

3.1 This MTM will be used to evaluate iron blast furnace slag for determination of leachate from the aggregate. The slag will meet the requirements of this test method prior to acceptance and use, except when used in HMA and PCC.

4. Equipment and Materials

Balance, Class G20, in accordance with AASHTO M 231
No. 4 sieve, conforming to AASHTO M 92
Filter paper, medium grade, conforming to ASTM E 832
The Geological Society of America Rock Color Chart
Plastic five-gallon bucket with lid
Funnel
Glass beaker, 150 mL conforming to ASTM E 960
pH meter
Tamping rod, round, steel, approximately 5/8 inch in diameter and approximately 24 inches long
Deionized or distilled water conforming to ASTM D 1193

5. General Requirements

5.1 Sampling and testing shall be conducted by the Aggregate Producer.

5.2 Material shall be stockpiled for a minimum of one month prior to testing aggregate for leachate determination.

5.3 Aggregate Sampling shall be conducted in accordance with MTM 107.

5.4 Stockpile location, stockpile identification and test results shall be maintained at the slag source and be made available upon request.

6. Procedure

6.1 Place the test sample in a five gallon bucket, fill with distilled or deionized water until the sample is covered with at least $^1/_2$ inch and not more than 1 inch of water and place a lid on the bucket. No additional water shall be added after the test is started. Allow the sample to soak for one day.

6.2 After the one-day soaking period, thoroughly stir the sample with the tamping rod and collect a water sample of approximately 100 mL.

6.3 Using a funnel, filter the water sample through the filter paper into a glass beaker.

6.4 Observe the color of the water.

6.5 Calibrate a pH meter in accordance with the manufacturer's instructions and ASTM E 70 and then determine the pH of the water sample to the nearest 0.1.

6.6 If the water color is equal to or darker than the moderate greenish- yellow color(Hue10 y) from the rock color chart, or the pH is not within 6.0 to 10.5, the material is not acceptable and the test is completed. Upon the completion of the color observation and pH measurement, the 100 mL water sample is discarded.

6.7 If the water color is lighter than the moderate greenish-yellow color (Hue 10 y) from the rock color chart and the pH is within 6.0 to 10.5, then allow the sample to soak for another six days. The bucket shall be covered with the lid and the sample stirred after three days and seven days of soaking.

6.8 Repeat steps 6.2 through 6.5 after three days and seven days of soaking.

7. Acceptance Criteria

7.1 If after one day, three days or seven days of soaking, the water color is equal to or darker than the moderate greenish-yellow color (Hue 10 y) from the rock color chart, the material will not be acceptable for use.

7.2 If after one day, three days or seven days of soaking, the pH is not within 6.0 to 10.5, the material will not be acceptable for use.

7.3 If after seven days of soaking, the water color is lighter than the moderate greenish-yellow color (Hue 10 y) from the rock color chart and the pH is within 6.0 to 10.5, the material is acceptable for use.

8. Report

8.1 All pH values shall be reported to the nearest 0.1 unit.

8.2 The color of the water shall be reported as lighter than, equal to or darker than the moderate greenish-yellow color (Hue 10 y) from the rock color chart.

MICHIGAN TEST METHOD
FOR
DETERMINING PERCENTAGE OF
FLAT PARTICLES, ELONGATED PARTICLES, OR
FLAT AND ELONGATED PARTICLES IN AGGREGATE

1. Scope

1.1 This test method covers the determination of the percentages of flat particles, elongated particles, or flat and elongated particles in coarse aggregates.

1.1.1 Except as described herein, the testing will be in conformance with ASTM D4791. This modification of ASTM D 4791 is to allow for the determination of the percent Flat and Elongated particles using material sieved during the standard Mechanical Analysis Test. This modification also addresses situations where requirements of the testing are not stated in the specification being followed.

1.1.2 The paragraph numbering conforms to the numbering in ASTM D4791. Only those sections containing modifications are printed in this MTM.

6. Apparatus

6.2 If the specification does not designate the aspect ratio that is to be used, use a 5:1 aspect ratio for HMA aggregates. For Chip Seal and all other aggregates use a 3:1 aspect ratio.

7. Sample

7.1 The sample for testing is the aggregate used for the sieve analysis. Separate and save the material retained on all sieves down to and including the sieve required by the specification. The #4 sieve is the smallest sieve size to be tested using this test method.

8. Procedure

8.1 If determination by mass is required, oven dry the sample to a constant mass at a temperature of 230 ± 9°F (110 ± 5°C). If determination is by particle count, drying is not necessary.

8.1.1 If the specification does not designate which procedure is to be used, both will apply to the limit given in the specification.

8.2 Sieve the sample to be tested in accordance with Test Method C136. Using the

material retained on the sieve required by the specification being used, reduce each size fraction present in the amount of 10% or more of the original sample in accordance with Practice C702 until approximately 100 particles are obtained for each size fraction required.

8.2.1 If the specification does not designate a sieve size, use all the sieves down to and including the sieve that will include more than 50% of the original sample mass, or the #4 sieve, whichever is larger.

8.5 If the specification does not designate which of the three test methods is to be followed, the procedure in section 8.4 *Flat and Elongated Particle Test* will be followed.

9. Calculation

9.1 Calculate the percentage of flat and elongated particles to the nearest 1% for each sieve size required.

10. Report

10.2 If a limit is not designated in the specification, the limit will be 10% for HMA aggregates. For Chip Seal aggregates the limit will be 15%. For all other aggregates the limit will be 20%.

MICHIGAN TEST METHOD
FOR
DETERMINATION OF PAVEMENT THICKNESS AND DEPTH OF STEEL REINFORCEMENT IN CONCRETE PAVEMENT BY THE CORING METHOD

1. Scope

1.1 This test method describes the procedure for selection of pavement units to be cored, requirements for number of cores to be taken, method of measurement for length of core and depth of pavement reinforcement, and procedure for reporting results.

1.2 Reference to Standard Specifications shall be interpreted as the Michigan Department of Transportation Standard Specifications for Construction, for the edition applicable to the project from which the cores are obtained.

1.3 Reference to Core Types A, B, and C, and Types X, Y, and Z, refer to ranges of pavement thickness and depth of pavement reinforcement, respectively, as described in Section 602.04H of the Standard Specifications with regard to contract price adjustments.

2. Referenced Documents

2.1 MDOT Standards:

Standard Specifications for Construction

2.2 AASHTO Standards:

R 11 Practice for Indicating Which Places of Figures Are to Be Considered Significant in Specified Limiting Values
T 148 Measuring Length of Drilled Cores

2.3 MDOT Forms:

502 Pavement Core Record
1872 Concrete Pavement Cores - Worksheet

3. Terminology

3.1 *Additional Core* - A core taken because the initial core from a pavement unit indicates pavement thickness or depth of steel in a penalty range.

3.2 *Alternate Core* - A core taken to replace an initial core from reinforced pavement when the initial cores did not contain reinforcing steel.

3.3 *Initial Core* - The first core taken from a pavement unit.

3.4 *Pavement Unit* - An area of pavement selected for coring for determination of pavement thickness and depth of reinforcement.

3.5 *Random* - Having no specific pattern.

3.6 *Straddler Core* - A core taken to determine the limits of pavement in a C and/or Z penalty range.

3.7 *Substitute Additional Core* - A core taken outside a pavement area having a deficiency in the C and/or Z penalty range which is substituted from an additional core from the pavement unit.

3.8 *Substitute Initial Core* - A core taken outside a pavement area having a deficiency in the C and/or Z penalty range which is substituted for the initial core from the pavement unit.

4. Determination of Pavement Units

4.1 To determine the frequency of coring, divide the pavement into units. The width of a unit is a lane. The width of each lane is determined by the mandatory and/or optional joints indicated on the cross sections shown on the plans.

4.2 *Determine the length of a unit as described in 4.2.1 or 4.2.2*.

4.2.1 Divide areas 2000 feet (600 meters) or more in length and 3 feet (1 meter) or more in width into units of 1000 linear feet (300 linear meters) of pavement for each lane, starting at the end of the pavement bearing the smaller station number. The length of the last unit will be variable to conform to the remaining pavement limits, and will be from 500 to 1500 feet (150 to 450 meters) in length.

4.2.2 Divide areas less than 2000 feet (600 meters) in length but at least 2500 square feet (250 square meters) in each lane into units of 500 linear feet (150 linear meters). Areas of 2500 square feet (250 square meters) or more but less than 500 linear feet (150 linear meters) will be considered as one unit. The length of the last unit will be variable to conform to the remaining pavement limits, and will be from 250 to 750 feet (75 to 225 meters) in length.

NOTE 1: The Standard Specifications provide that temporary concrete pavement, and pavement within 4 feet (1.2 meters) of an obstruction, pavement areas of less than 2500 square feet (250 square meters), or pavement less than 3 feet (1 meter) in width, will be cored at the discretion of the Engineer.

NOTE 2: While requirements for coring are different depending on the area of pavement, any price adjustments (or requirement for replacement) should be as indicated in the Standard Specifications.

5. Coring Procedure

5.1 *Identification of Cores* - Each core taken for project acceptance purposes shall be numbered with consecutive numbers starting January 1 each year. A consecutive core

number is assigned to the initial core of each added pavement unit regardless of the core's location within the limits of a single project or from within various projects. All cores taken from a pavement unit shall bear the same number as the initial core. Suffixes, as described in 5.1.1 through 5.1.4, shall be added to cores other than initial cores to identify their core type, as described in 5.3. The assignment of suffixes shall represent the order in which the cores were taken.

5.1.1 When cores are required to determine deficiencies in pavement thickness, the suffix shall be the letters A, B, C, etc.

5.1.2 When cores are required to determine the out of tolerance depth range of reinforcement, the suffix shall be the letter "S" plus a number, as: S1, S2, S3, etc.

5.1.3 When cores are required for both pavement thickness deficiencies and steel reinforcement depth range determination, both suffixes shall be used, as 503AS1, 503BS2, etc.

5.1.4 When an alternate core is taken, the suffix shall be the letter "X".

5.2 *Initial Core* - Take one core (the "initial" core) from each prescribed pavement unit. Select the longitudinal location at random, except that cores will not be taken within 2 feet (0.60 meters) of transverse joints. Select the transverse location at random, except that cores will not be taken within 2 feet (0.60 meters) of a longitudinal joint, or in the area of thickened edges of lanes.

5.2.1 If a core from a reinforced pavement does not include a section of pavement reinforcement, take an "alternate initial" core (or "alternate additional" core - see 5.5) not less than 10 feet (3 meters) nor more than 100 feet (30 meters) up stationing of the initial core. Use this alternate core for the determination of the depth of pavement reinforcement only.

5.2.2 Record the stationing of each core to the nearest foot (0.5 meters). Record the transverse location relative to centerline, edge of pavement, or other reference to the nearest 0.1 foot (50 mm).

5.3 *Classification of Cores* - After measuring the core as described in Section 6, classify the core in accordance with the results for both the measurement for concrete thickness and the depth of steel in accordance with the ranges indicated in Tables 6023A and 602-3B of the Standard Specifications. The resulting classification will determine the procedure to be followed, as described in 5.4 and 5.5.

5.4 *Core Type AX* - When the initial core from a pavement unit is classified as Type AX, no additional cores will be taken from that pavement unit.

5.5 *Core Type Other Than AX* - When the initial core from a pavement unit is classified as other than Type AX, take "additional" cores as described in 5.5.1 or 5.5.2.

NOTE 3: The Standard Specifications provide that additional cores are to be used only for evaluating the pavement unit as related to the deficiency found in the initial core. Thus, if the initial core is classified as Type BX, additional cores would be evaluated only for pavement thickness, and depth of reinforcement would not be considered even though it may be in a Z range in an additional core.

5.5.1 *Core Types AY, BX, and BY* - When the initial core is classified as one of these core types, take two additional cores within the pavement unit. When the coring is being done on a linear basis, take one additional core not less than 100 feet (30 meters) nor more than 300 feet (90 meters) in each direction from the initial core. When the second additional core cannot be taken as described above due to the limits of the pavement unit, take the second additional core at least 300 feet (90 meters) from the initial core and at least 100 feet (30 meters) but not more than 300 feet (90 meters) from the first additional core. When the coring is being done on a square meter area basis, take the two additional cores at random within the pavement unit.

5.5.1.1 If the measurements of the two additional cores are within the Type A, B, X, or Y range for the measurement for which the initial core was deficient, no further cores will be taken within the pavement unit.

5.5.1.2 If the measurements for either or both of the additional cores are in a C and/or Z range for the measurement for which the initial core was deficient, follow the requirements in 5.5.2.2.

5.5.2 *Core Types AZ, BZ, CX, CY, and CZ* - When the initial core or either or both of the additional cores, is classified as one of these core types, take "straddler" cores at random transversely within the pavement unit, but spaced at 10 foot (3 meter) longitudinal intervals in each direction from the C and/or Z core until, in each direction, a core is obtained which is no longer in a C and/or Z range. The first core taken in each direction which is not in the C and/or Z range will determine the extent of the area having a deficiency in the C and/or Z range (C/Z deficiency area). The procedure to be followed after defining the limits of the C/Z deficiency area is as described in 5.5.2.1 for cases where the initial core indicated a C and/or Z deficiency, or 5.5.2.2 for cases where an additional core indicated a C and/or Z deficiency.

5.5.2.1 *Initial Core Classified as C and/or Z* - The first straddler core taken that is not in the C and/or Z range will become the "substitute initial" core for the pavement unit. The second straddler core taken that is not in the C and/or Z range will be used only in the determination of the extent of pavement in the C and/or Z range. If the first straddler (substitute initial core) is classified as Type AX, no additional cores will be taken, as described in 5.4. If the first straddler (substitute initial core) is classified as Type AY, BX, or BY, taken two additional cores as described in 5.5.1.

5.5.2.2 *Additional Core Classified as C and/or Z* - The first straddler core taken that is not in the C and/or Z range will become a "substitute additional" core and will meet the requirements for one of the two additional cores to be taken as described in 5.5.1.1. The second straddler core taken that is not in the C and/or Z range will be used only in the determination of the extent of pavement in the C and/or Z range.

6. Measurement of Cores

6.1 Measurement for Thickness of Pavement - Make measurements for the length of a core for determining pavement thickness in accordance with AASHTO T 148, and round the results using the rounding off method of AASHTO R 11. Due to construction practices, the base course material may vary between core locations of contiguous pavement coring units. The measurement of a core as described in 6.1.1 and 6.1.2 will be governed by the actual base course material displayed at a core location. Measuring apparatus shall be constructed as stated in AASHTO T 148 except, the three symmetrically placed supports that contact the lower end of the specimen may be rounded to a radius of not more than 0.75 inch, and the end of the measuring rod or other device that makes contact with the end surface of the specimen for measuring may be rounded to a radius of not more than 0.25 inch.

6.1.1 For concrete placed over a dense-graded aggregate, clean the bottom of cores by tooling and wire brushing as necessary to remove sand and loosely attached coarse particles. Measure the length of the core, round the result to 0.1 inches (1 mm) and report as "actual depth" on the field worksheet (Figure 1).

6.1.2 For concrete placed over an open-graded aggregate (OGA), tool the bottom of cores to remove particles of the OGA projecting significantly beyond the lower surface of the mortar, then measure the length of the core. Record the length of the core (thickness of pavement) to the nearest 0.1 inch (1 mm) as the "actual depth" on the worksheet. Deduct 0.25 inches (6 mm) from the actual depth (before rounding the raw data) and report to the nearest 0.1 inch (1 mm) as the "adjusted depth".

NOTE 4: The 0.25 inch (6 mm) deducted is based on laboratory testing and is the approximate increase in length of the core over the thickness of concrete placed, due to mortar separating from the concrete and surrounding and bonding to particles in the OGA. The increased quantity of concrete required due to loss of mortar into the OGA is estimated to be less than 2 percent of the volume of concrete required.

6.2 *Measurement for Depth of Reinforcement* - Make measurements for depth of reinforcement from the top surface of the core to the top of the longitudinal bar or wire to the nearest 0.1 inch (1 mm) and report as "depth of steel". When two or more longitudinal bars or wires are present in a core, record the depth of each bar or wire individually and report the depth of reinforcement as described in 6.2.1, 6.2.2, 6.2.3, or 6.2.4.

6.2.1 *Cores with Reinforcement in X and/or Y Depth Ranges* - For cores with two or more longitudinal bars or wires positioned in the X and/or Y depth ranges, the reinforcement measurements will be averaged.

6.2.2 *Cores with Reinforcement in X or Y and Lower Z Depth Ranges* - For cores with longitudinal bars or wires positioned in the lower Z depth range and also in the X and/or Y range, only the measurements in the X and/or Y range will be used for determining the depth of reinforcement, as described in 6.2.1.

6.2.3 *Cores with Reinforcement in X or Y and Upper Z Depth Ranges* - For cores with longitudinal bars or wires positioned in the upper Z range, and also in the X and/or Y range, only the measurements in the upper Z range will be used to classify the core.

6.2.4 *Cores with Reinforcement in Upper and/or Lower Z Ranges* - For cores with longitudinal bars or wires in either or both Z ranges, the measurements will be reported individually for each Z range.

NOTE 5: The Standard Specifications provide for an adjustment of the X, Y, and Z reinforcement maximum depth ranges where the "actual depth" or "adjusted depth" (as determined in 6.1.1 or 6.1.2) exceeds the pavement plan thickness by 0.2 inches (5 mm) or more. Therefore it is necessary that each core used to determine depth of reinforcement also be measured for thickness of pavement. No adjustment is made in any of the recorded measurements due to an adjustment in reinforcement depth range.

7. Report

7.1. Report the results of the determinations by this test method on the Pavement Core Record (Form 502). When laboratory results are reported, use the Concrete Pavement Cores - Worksheet (Form 1872).

7.2 *Form 502* - Report the project limits of roadways and the individual limits of ramps, shoulders, and other pavement areas by their P.O.B. and P.O.E. stations. Stationing limits of bridges and gaps will be reported but will not be included in the determination of the length of a unit. Station equations will be reported. All cores taken on a project will be reported. Each core in the report will be identified by core number, station, transverse location, actual depth and adjusted depth as described in 6.1, core length surplus or shortage, depth of reinforcement, date core was taken, lane description, and lane width.

NOTE 6: The Standard Specifications provide that individual core length measurements in excess of the plan thickness by more than 0.2 inches (5 mm) will be considered as the specified thickness plus 0.2 inches (5 mm) and will be reported as a "surplus" of 0.2 inches (5 mm).

7.3 *Form 1872* - Report the laboratory identification number, core number, actual or adjusted depth, and depth of reinforcement.

7.4 When three cores are taken from a pavement unit as described in 5.5.1, the measurements for thickness and/or depth of reinforcement will be averaged as provided in 7.4.1 and 7.4.2.

NOTE 7: The Standard Specifications provide for using the measurement from additional cores only for the defect that required the taking of the additional cores.

7.4.1 When averaging the lengths of the three cores, include the length in excess of specified pavement thickness only as permitted by the Standard Specifications (See NOTE 6).

7.4.2 For cores with reinforcement in the Y or Z depth range, the thickness of pavement shall also be determined for each core, so that the limits of the depth range may be determined for pavement having excess thickness. In this case, the actual or adjusted value of pavement thickness (as appropriate) from 6.1 is used to determine average pavement thickness.

fvfichigan Department
of Transportation
502 (5/00)

PAVEMENT CORE RECORD

FILE 305

DISTRIBUTION. Project File/Project Engineer. Region C & T (as applicable)

SHEET ----------
OF ----------

CONTROL SECTION JOB NO. FA NC

CONTRACTOR

PAVING CONTRACTOR

LOCATION OF PROJECT

CORE NO.	STATION	LOCATION RELATIVE TO	ACTUAL DEPTH	ADJUSTED DEPTH	SURPLUS	SHORTAGE	DEPTH OF STEEL	DATE DRILLED

REM, RKS

502-R (5/00)

FILE 30

CORE NO.	STATION	LOCATION RELATIVE TO	ACTUAL DEPTH	ADJUSTED DEPTH	SURPLUS	SHORTAGE	DEPTH OF STEEL	DATE DRILLED	REMARKS

REMARKS:

PROJECT ENGINEER

OPERATOR

REGION

FORM 1 8 72

UABNm Doponorro of Trona Won len genisl

CONCRETE PAVEMENT CORES

(WORK SHEET)

LAB. NO.

[DATE RECEIVED (DATE MEASUREMENTS DATE STRENGTHS REPORTED

PROJ. NO.

LABORATORY NO.	CORE NO	LENGTH mm (As Rec'd.1	DEPTH OF STEP	DIAM. mm	LENGTH CAPPED SPEC., m m	TOTAL LOAD NEWTONS	AREA mm'	HEIGHT FACTOR	TESTED	DATE BROKEN
									COMPUTED	
									CHECKED	
									COMPRESSIVE	

REMARKS:

STRENGTH MPa (H/D -= 21

TESTS

FINAL REPORT BY: DATE PROOFREADBY

FORM 1 8 72 R

107211 16./

LENGTH AS RECEIVED , mm

LAB. NO.										
CORE NO.										
			I(pr							
TOTAL										
AVERAGE										
6AX)										

DEPTH OF ram

TOTAL										
AVERAGE										

MEASURED BY: COMPUTED BY: !CHECKED BY:

SAMPLE

Figure 2. Form 1872/1872R

MICHIGAN TEST METHOD
FOR
TESTING CONCRETE BLOCKS USED FOR
PRECAST CONCRETE SLOPE PAVING

1. Scope

1.1 This method describes the procedures for testing precast concrete blocks used for slope paving for compressive strength and absorption. Except for the size and preparation of the test specimens, the units shall be tested according to ASTM C 140, Sampling and Testing Concrete Masonry Units.

2. Number of Specimens

2.1 The number of units representing a sample, and the number of samples taken, shall be as described in the Materials Source Guide of the Department. In general, four units will form a sample, three of which will be tested and the fourth reserved as a "save sample" or to be used in place of a defective specimen.

3. Compressive Strength

3.1 Compression test specimens having surface dimensions of 4 by 4 inches (100 mm) will be sawed from the units. The specimens will be tested with the load applied in the direction of the thickness of the unit.

4. Absorption

4.1 The test specimen for determination of the absorption shall be one-half of a unit, sawed from the same unit from which the compression test specimen was sawed. Slurry from the sawing shall be washed from the specimen before proceeding with the absorption test.

MICHIGAN TEST METHOD
FOR
CONSOLIDATION METHOD OF CONCRETE CYLINDER TEST SPECIMENS

1. Scope

1.1 This test method describes the consolidation method of concrete cylinder test specimens used in determining the compressive strength of concrete.

1.2 Except as described herein, the method will be in conformance with ASTM C 31.

2. Applicable Documents

2.1 ASTM C31 Specification for Making and Curing Concrete Test Specimens in the Field.

3. Procedure

3.1 All concrete test specimens shall be formed and cured in accordance with ASTM C 31.

3.2 Concrete cylinder test specimens, regardless of slump, may be consolidated either by rodding or vibrating as described in Section 8.3 of ASTM C 31.

MICHIGAN TEST METHOD
FOR
USE OF UNBONDED CAPS IN DETERMINATION OF COMPRESSIVE STRENGTH OF HARDENED CONCRETE CYLINDERS

1. Scope

1.1 This test method describes requirements for a capping system using unbonded caps for testing concrete cylinders in accordance with AASHTO T 22.

1.2 Unbonded capping systems must be qualified as specified in ASTM C 1231, Section 8, prior to use for acceptance testing.

2. Referenced Documents

AASHTO T 22 Standard Method of Test for Compressive Strength of Cylindrical Concrete Specimens

ASTM C 1231 Practice for Use of Unbonded Caps in Determination of Compressive Strength of Hardened Concrete Cylinders.

ASTM D 2240 Test Method for Rubber Property - Durometer Hardness

3. Terminology

3.1 Definition of terms:

3.1.1 *Unbonded cap* refers to a steel extrusion controller and an elastomeric pad.

3.1.2 *Pad* refers to an unbonded elastomeric pad.

4. Significance and Use

4.1 This method describes the use of elastomeric pads and steel extrusion controllers in testing hardened concrete cylinders. It may be used as a suitable alternate as described in AASHTO T 22, Annex A3.1.

4.2 The elastomeric pads deform in initial loading to conform to the contour of the ends of the cylinder. They are restrained from excessive lateral spreading by metal rings to provide a uniform distribution of load from the bearing blocks to the ends of the concrete cylinder.

5. Summary of Method

This method establishes requirements for the unbonded capping system. Except for **qualification testing**, the procedures for aligning specimens in the testing machine and initial application of load, conduct the testing, recording, and reporting according to the requirements of AASHTO T 22.

6. Materials and Apparatus

6.1 Use pads made of elastomeric material that will accommodate surface irregularities in ends of the cylinder and have the necessary toughness to withstand repeated use. The pads shall be 0.5 inches 0.0625 inches (13 mm + 2 mm) thick and the diameter shall not be more than 0.0625 inches (2 mm) less than the inside diameter of the retaining ring. Use pads that have a **minimum** Type A durometer hardness as required by Table 1 of ASTM C1231. Type A durometer hardness is defined by ASTM D2240.

6.2 The same surface of the neoprene cap shall bear on the concrete cylinder in all tests performed with an individual cap. Use caps for a maximum of 100 tests. If the pad shows a crack or other signs of excessive wear, as described in Section 7.2 of ASTM C1231, then it is to be discarded.

6.3 Steel extrusion controllers must be durable in repeated use. The cavity in the metal retainers must have a depth of at least twice the thickness of the pad. The inside diameter of the retaining rings shall not be less than 102 percent or greater than 107 percent of the diameter of the cylinder. The surfaces of the metal retainers that contact the bearing blocks of the testing machine shall be plane to within 0.002 inches (0.05 mm). The bearing surfaces of the retainer shall not have gouges, grooves, or indentations greater than 0.01 inches (0.25 mm) deep or greater than 0.05 in5 (3.2 mm^2) in surface area.

7. Test Specimens

7.1 Neither end of a cylinder may depart from perpendicularity to the axis by more that 0.5 degrees. No individual diameter of a cylinder may differ from any other diameter by more than 2 percent.

7.2 Depressions under a straight edge measured with a round wire gage across any diameter shall not exceed 0.20 inches (5 mm). If cylinder ends do not meet this tolerance, the cylinder shall not be tested using this method unless irregularities are corrected by sawing or grinding.

8. Precautions

8.1 Concrete cylinders tested with neoprene caps rupture more intensely than comparable cylinders tested with sulphur - mortar caps. As a safety precaution, the cylinder testing machine should be equipped with a protective cage.

9. Procedure

9.1 Examine the pads for excessive wear or damage. Replace pads with cracks or splits exceeding 0.375 inches (10 mm) in length regardless of depth. Insert the pads in the retainers before the assembly is placed on the cylinder.

9.2 Center the unbonded caps on the cylinder and place the cylinder on the lower bearing block of the testing machine. Align the axis of the cylinder with the center of thrust of the testing machine. As the spherically seated block is brought to bear on the upper steel extrusion controller, rotate its movable portion by hand so that uniform seating is obtained. After application of load, but before reaching 10 percent of the anticipated specimen strength, check to see that the axis of the cylinder is vertical within a tolerance of 0.125 inches (3 mm) in 12 inches (300 mm). Also check to see that the ends of the cylinder are centered within the retaining rings. If the cylinder alignment does not meet these requirements, release the load, check compliance with 7.1 and recenter the specimen. Reapply load and recheck the specimen centering and alignment. A pause in load application to check cylinder alignment is permissible.

9.3 Complete the load application, testing, calibration, and reporting of results according to AASHTO T 22. Unbonded capped cylinders may develop early cracking but continue to carry increased load. Therefore, cylinders must be tested to complete failure.

MICHIGAN TEST METHOD
FOR
TESTING CONCRETE

1. Scope

1. ASTM C 172 is to be followed for sampling freshly mixed concrete except for these modifications. Concrete samples should be representative of the entire concrete batch. For structure concrete being placed with a transfer bucket, take samples after more than 2 cubic yard (2 cubic meter) has been discharged. If it is necessary to take samples from a stream of concrete where the concrete is being placed directly into the forms, make a representative sample by mixing several pailfuls of concrete taken from the stream. Pavement concrete may be sampled after the concrete is placed on the grade if taken from 2 or more locations to make a composite sample. Concrete sampled from pumped concrete should be taken at the discharge end of the pump. For convenience, routine tests may be made on concrete samples from the pump hopper provided sufficient correlative tests have been made between the truck discharge and the pump discharge.

MICHIGAN TEST METHOD
FOR
SHOTCRETE CORE EVALUATION

1. Scope

1.1 This test method is used to determine a nozzleman's core grades and score on a shotcrete test panel, and to establish approval status for application of shotcrete on Michigan Department of Transportation (MDOT) projects. This test method covers the following processes, which are used to determine a nozzleman's ability to place shotcrete:

- Construction of test panels
- Shotcrete application to test panels
- Coring at specified locations
- Grading of cores
- Calculation of test panel score
- Determining approval status

2. Referenced Documents:

2.1 ASTM Standards:

C1604 Standard Test Method for Obtaining and Testing Drilled Cores of Shotcrete.

2.2 ACI Standards:

ACI 506.2-95 Specifications for Shotcrete.

3. Procedure:

3.1 For standard work with no unique geometries or close spacing of steel reinforcement, use the standard test panel. Construct the standard test panel according to Figure 1.

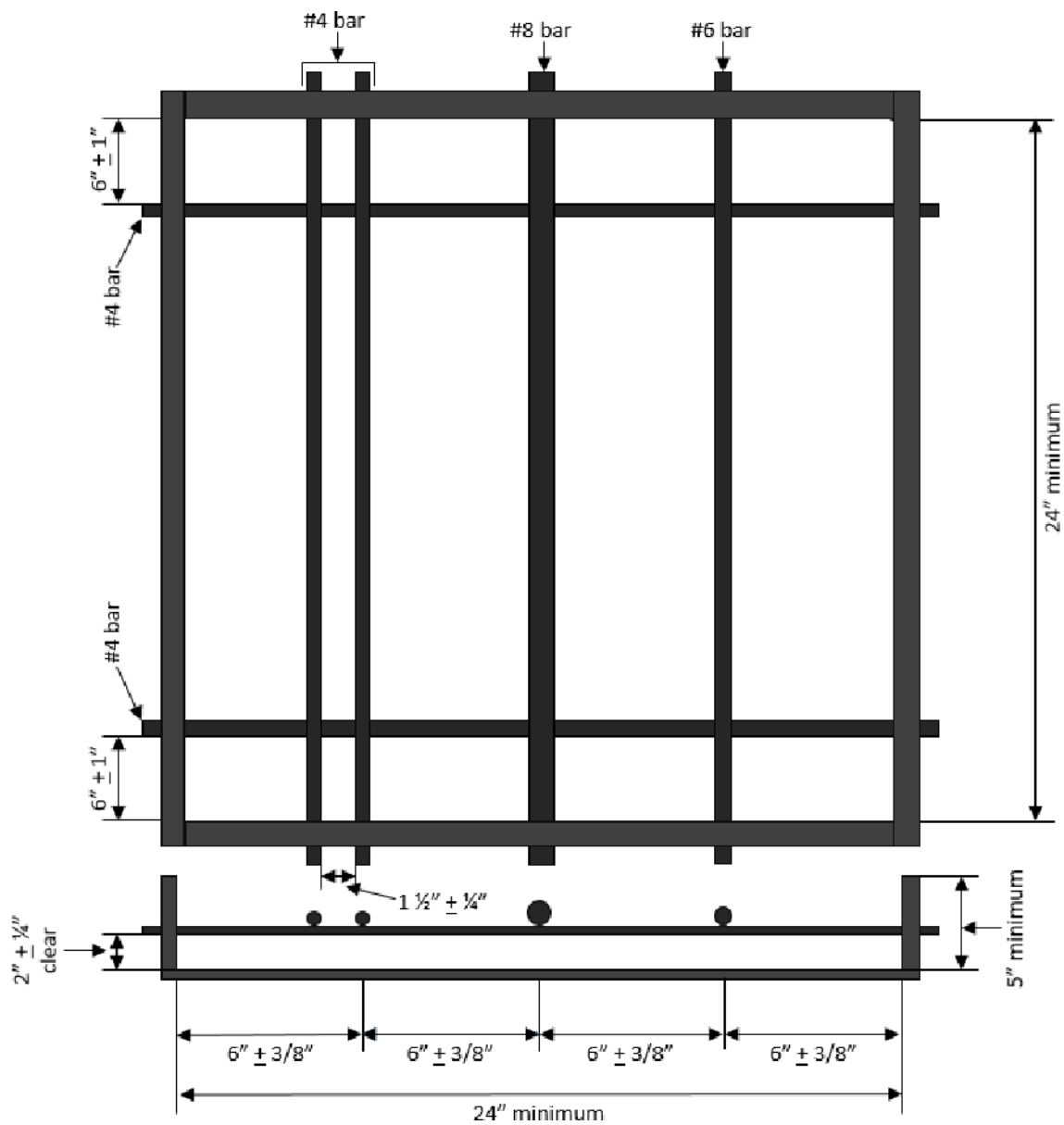

Figure 1. Standard Test Panel Layout

For nonstandard work, construct a modified test panel. Construct the modified test panel to ensure the project-specific features (geometry, reinforcing bar alignment, reinforcing bar spacing, etc.) are adequately represented.

Construct all test panel forms using either wood or steel. Test panels must have the minimum width, length and depth shown in Figure 1. Wood test panel sides must be a minimum of 1.5" thick. Wood test panel backs must be plywood at least 0.75" thick. Steel test panel sides and back must be at least 3/16 in. thick.

3.2 Orient test panels to best represent the shotcrete application for the project. Test panel(s) must be oriented to one or more of the following application orientation(s):

- Horizontal application:
  - Place test panel on a flat surface

- Vertical application:
  - Place test panel perpendicular to grade
  - Brace the test panel to prevent excessive vibration, failure of the test panel, and from tipping either forward or backward
- Overhead application:
  - Place test panel horizontally, facing downward
  - Position test panel approximately 8 feet above the grade
  - Reinforce or brace the test panel to prevent excessive vibration, failure of the test panel, and from falling or tipping either forward or backward

3.3 Apply shotcrete to one test panel for each combination of orientation, shotcrete material, equipment, nozzleman, and environment as will be used on the project.

3.4 Take cores from each test panel as described below. Allow the shotcrete to cure for a minimum of 24 hours prior to coring. Cores must be full depth, with a 4" diameter.

Take cores from standard test panels as shown in Figure 2.

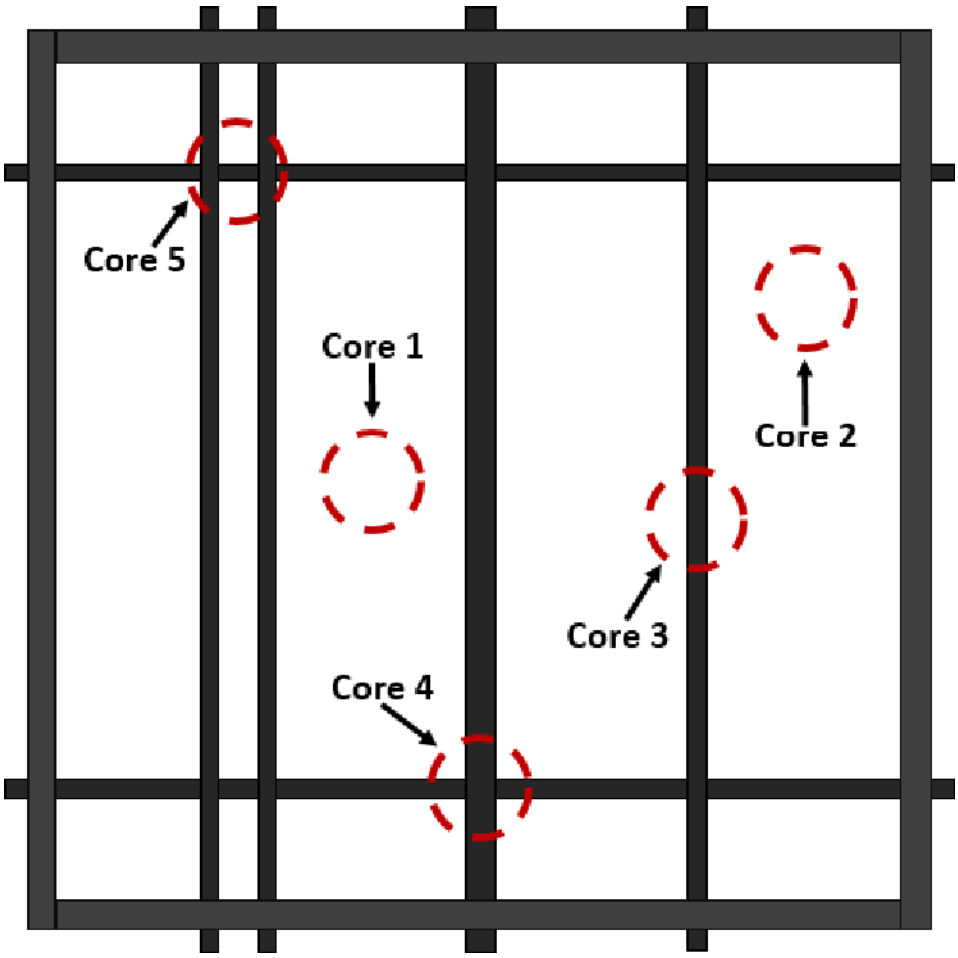

Figure 2. Coring Locations for a Standard Test Panel

Take cores from modified test panels from locations that are representative of the scope of the work which will be performed and typical of the most congested area of steel reinforcement present in the structure. Take a minimum of 5 cores. Take a minimum of two cores from areas free of reinforcement and a minimum of 3 cores from areas with reinforcement.

3.5 Clearly label shotcrete cores with the following information: project number, test panel orientation (horizontal, vertical, or overhead) and the core number. Submit the General Information and Shooting Orientation/Description of Work section of the MDOT Shotcrete Test Panel Evaluation form (form #1446) with the cores. Form 1446 can be obtained from the MDOT form repository website.

3.6 Grade cores according to section 4.1 of this Michigan Test Method.

3.7 Determine the test panel score from a minimum of 5 cores according to the following equation:

$$Test\ Panel\ Score = \frac{\sum core\ grades}{number\ of\ cores}$$

3.8 Approval of the nozzleman, shooting orientation(s), materials and application method(s) will be based on a passing shotcrete test panel. Requirements for a passing test panel are provided in section 4.2 of this Michigan Test Method.

3.5 Core grading, shotcrete test panel evaluation, and determination will be recorded on form 1446's and distributed to the parties listed in the distribution box.

4. <u>Grading:</u>

4.1 Each individual shotcrete core will be given a grade from 1 to 5. Grade each individual core using only whole numbers. To determine the grade of each shotcrete core, the following information and diagrams provided by ACI 506.2-95 are to be used:

Grade 1: Shotcrete specimens are solid; there are no laminations, sandy areas or voids. Small air voids with a maximum diameter of 1/8 in. and maximum length of 1/4 in. are normal and acceptable. Sand pockets, or voids behind continuous reinforcing steel are unacceptable. The surface against the form or bond plane shall be sound, without a sandy texture or voids.

Grade 1

Grade 2: Shotcrete specimens shall have no more than two laminations or sandy areas with dimensions not to exceed 1/8 in. thick by 1 in. long. The height, width and depth of voids shall not exceed 3/8 in. Porous areas behind reinforcing steel shall not exceed 1/2 in. in any direction except along the length of the reinforcing steel. The surface against the form or bond plane shall be sound, without a sandy texture or voids.

Grade 2

Grade 3: Shotcrete specimens shall have no more than two laminations or sandy areas with dimensions exceeding 3/16 in. thick by 11/4 in. long, or one major void, sand pocket, or lamination containing loosely bonded sand not to exceed 5/8 in. thick and 11/4 in. in width. The surface against the form or bond plane may be sandy with voids containing overspray to a depth of 1/16 in.

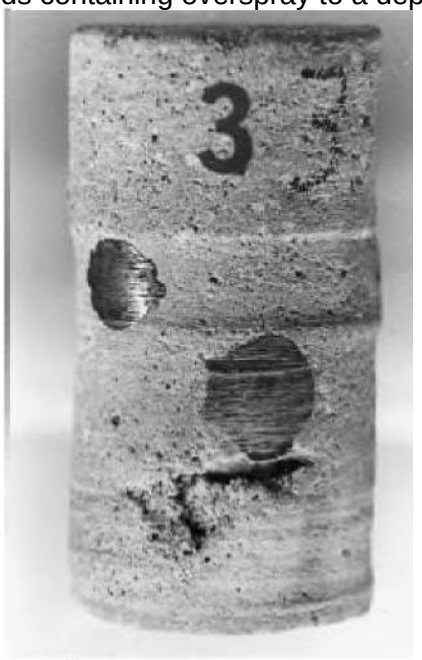

Grade 3

Grade 4: The core shall meet in general the requirements of Grade 3 cores, but may have two major flaws such as described for Grade 3 or may have one flaw with a maximum dimension of 1 in. perpendicular to the face of the core with a maximum width of 11/2 in. The end of the core that was shot against the form may be sandy and with voids containing overspray to a depth of 1/8 in.

Grade 4

Grade 5: A core that does not meet the criteria of core grades 1 through 4, by being of poorer quality, shall be classified as Grade 5.

Grade 5

4.2 Once each core is graded and the average is determined for the test panel, the panel must be evaluated according to the following criteria:

- Each individual test panel core must be less than or equal to a grade of 3 (< 3)
- Test panel score must be less than or equal to a grade of 2.5 (< 2.5)

If the test panel meets the above criteria the panel will be deemed passing. If the test panel does not meet the above criteria then the panel will be deemed failing.

5. Report:

6.1 Report all information on the MDOT Test Panel Evaluation Form #1446. This form must be submitted to the Construction Field Service's Materials Section at the following email address MDOT-ConcreteEngineer@michigan.gov, the Project Engineer, and all other parties determined applicable.

6. Example:

Michigan Department of Transportation
1446 (01/11/19)

SHOTCRETE TEST PANEL EVALUATION

PAGE 1 of 1

GENERAL INFORMATION	
NOZZLEMAN John Doe	CONTROL SECTION 12345
SHOTCRETE CONTRACTOR Super Shotcrete Inc.	JOB NUMBER 123456
PRIME CONTRACTOR We-Build-Bridges	LOCATION 1-496 over Cedar
JOB DESCRIPTION Substructure repair consisting of columns and caps present in the piers.	DATE Friday 09/13/2019

SPECIFICATIONS

Shotcrete test panels are scored according to the Michigan Department of Transportation's Michigan Test Method (MTM) For Shotcrete Core Evaluation (MTM 208).

SHOOTING ORIENTATION/DESCRIPTION OF WORK

HORIZONTAL a VERTICAL OVERHEAD

DESCRIPTION
This work will require vertical and overhead applications. Multiple small patches and repairs to the structure. Must be able to apply shotcrete behind and around steel reinforcement. No unique geometries present in the shotcrete application area.

PATCH MATERIAL
Awesome Patch

WEATHER
Sunny, high 80s

TEST PANEL SCORING

HORIZONTAL SHOOTING ORIENTATION			VERTICAL SHOOTING ORIENTATION			OVERHEAD SHOOTING ORIENTATION		
CORE 1	2	CORE 4 2	CORE 1	3	CORE 4 3	CORE 1	1	CORE 4 1
CORE 2	1	CORE 5 1	CORE 2	2	CORE 5 2			CORE 5 1
CORE 3	1		CORE 3	3		CORE 3 5		
Average		1.4	Average		2.6	Average		2.0
Pass/Fail		Pass	Pass/Fail		Fail	Pass/Fail		Fail

COMMENTS

John Doe created an acceptable test panel for a horizontal shooting orientation.

John Doe's vertical and overhead test panels were not acceptable. The vertical panel failed because the average of the five cores was greater than 2.5. The overhead panel failed because core 3 was graded greater then a value of 3.

Orientations which the nozzleman is approved to perform:

☐ Horizontal ☐ Vertical ☐ Overhead

(Check box to approve an orientation)

Examiner's Signature: Thomas Ethan Bohmes

DISTRIBUTION

Please distribute all results to the following:

- Project Engineer
- Construction Field Service's Materials Section: MDOT-ConcreteEngineeraMichician.gov

MICHIGAN TEST METHOD
FOR
AIR AND WATER METHOD OF DETERMINING
THE ACTUAL SPECIFIC GRAVITY BY SINGLE OPERATOR
FOR A HMA MIXTURE

1. Scope

1.1 This method covers the determination of the actual specific gravity of compacted HMA paving mixtures.

2. Definition

2.1 Actual Specific Gravity as determined by this method is defined by the ratio of the weight of a HMA mixture to its volume divided by the density of water.

3. Apparatus

3.1 One balance with a submerged weighing platform (V0.1 gm accuracy). See Figure 1.

4. Preparation of Apparatus

4.1 Add water to the bucket illustrated in Figure 1 such that the temperature of the bath is brought to 77 BF V 0.4 BF (25 BC V 0.2 BC).

4.2 Adjust the balance such that the reading is zero with the submerged weighing platform attached.

5. Conditioning

5.1 Before testing, dry each specimen thoroughly and remove any loose material that could possibly fall off in the course of the test.

6. Procedure

6.1 Record the weight of the sample in air.

6.2 Gently place the specimen into the bath and onto the weighing platform so that the sample specimen is completely submerged.

6.3 Record the weight of the sample in water.

6.4 Complete calculations.

7. Calculations

7.1 Actual Specific Gravity =

$$\frac{\text{(Weight in Air)}}{\text{([Weight in Air] - Weight in Water)}}$$

8. Precision and Accuracy

8.1 The actual or bulk specific gravity can be established to within three decimal place accuracy (0.001).

8.2 All tests conducted by single operator should be within 0.012 for any group of test samples to be acceptable.

9. References

ASTM Standards:

D 1188 Test Method for Bulk Specific Gravity and Density of Compacted HMA Mixtures, Using Paraffin-Coated Specimens

D 2041 Test Method for Theoretical Maximum Specific Gravity of HMA Paving Mixtures

D 2726 Test Method for Bulk Specific Gravity of Compacted HMA Mixtures Using Saturated Surface-Dry Specimens

D 3549 Test Method for Thickness or Height of Compacted HMA Paving Mixture Specimens

E 12 Definitions of Terms Relating to Density and Specific Gravity of Solids, Liquids, and Gases

AASHTO Test:

T 166-83 Bulk Specific Gravity of Compacted HMA Mixtures using Saturated Surface-Dry Specimens

MICHIGAN TEST METHOD
FOR
THE ASPHALT IMMERSION METHOD (BEAKER METHOD) FOR DETERMINING THE THEORETICAL MAXIMUM SPECIFIC GRAVITY OF HMA PAVING MIXTURES

1. Scope

1.1 This method covers the determination of the theoretical maximum specific gravity of HMA paving mixtures by the immersion of samples in asphalt cement.

2. Applicable Documents

2.1 *ASTM Standards*:
D 979 Sampling HMA Paving Mixtures
D 70 Specific Gravity and Density of Semi-Solid HMA Materials
C 702 Reducing Samples of Aggregate to Testing Size

3. Summary of Method

3.1 A representative sample of HMA paving mixture is immersed in asphalt cement in order to drive out all air and achieve a voidless mass. The entire mass (mixture, asphalt cement used for immersion, stainless steel beaker used for containment, and brass rod used for stirring) is weighed in air and water. The theoretical maximum specific gravity of the mixture is calculated based on the following knowns: the mass and volume of the beaker, rod, and asphalt cement (used for immersion) and the mass of the mixture.

4. Significance

4.1 The theoretical maximum specific gravity is necessary to conduct a proper voids analysis of a compacted paving mixture.

4.2 *This* particular *method is significant for several reasons*:

4.2.1 This method correlates well with Michigan Department of Transportation MTM 307-77 and is simpler, more efficient and more economical to run.

4.2.2 Since asphalt cement is the immersion medium, this method (as did MTM 307-77) eliminates problems associated with absorption of the medium by aggregate in porous mixtures. Absorption of materials other than asphalt (since the absorption rates are different) will lead to erroneous results.

4.2.3 The method appears to be one which can be easily used in the field.

5. Definitions

5.1 *Theoretical* Maximum Specific Gravity - Specific gravity of a mixture without air voids.

6. Apparatus

6.1 *Container* - 1200 mL, seamless, stainless steel beaker.

NOTE 1: Larger beakers may be used provided a balance with ample capacity and sufficient sensitivity is used, and provided the water bath used for weighing in water is suitable as described in 6.4.2.

6.2 *Stirring Instrument* - Brass rod approximately 0.315 inches (8 mm) in diameter and approximately 7.87 inches (200 mm) long.

6.3 *Balance* - With ample capacity and sufficient sensitivity to enable calculations to at least four significant figures (to at least three decimal places). The balance shall be equipped with a suitable suspension apparatus and holder to permit weighing a sample which is suspended in a water bath.

6.4 *Water Bath*:

6.4.1 A constant temperature water bath deep enough to maintain the water level 3/4 the height of the beaker. The bath shall be thermostatically controlled as to maintain the specified test temperature V 2^{E}F (V 1^{E}C) at any point in the tank.

6.4.2 A bath suitable for total immersion of the beaker and immersed mixture sample while suspended under the balance. The bath shall be equipped with an overflow outlet for maintaining a constant water level.

6.5 *Oven* - *oven* shall be provided which will maintain the specified temperature V 5^{E}F (V 3^{E}C).

7. Materials

7.1 Asphalt *cement* (500-1000 grams) of known specific gravity (see Method D 70).

8. Calculation

8.1 Weigh rod *and* beaker in air and water at 77 ^{E}F V 2 ^{E}F (25^{E}C V 1^{E}C) and record weights as R_A, R_w, B_A, B_w.

9. Sampling

9.1 Obtain the sample in accordance with Method D 979 or as quartered from a laboratory prepared mixture sample.

9.2 The *weight* of the test sample shall conform to the following requirements. Samples larger than the capacity of the container should be quartered (in a manner similar to that described in ASTM C 702, Method B) and tested a portion at a time.

Maximum Aggregate Size, Square Openings, inch (mm)	Minimum Weight of Test Sample (gms) Per Test Point
1 2 (37.5)	4000
1 (25.0)	2500
3/4 (19.0)	1000
2 (12.5)	500
3/8 (9.5)	500
No. 4 (4.75)	500

10. <u>Procedure</u>

10.1 Heat to 290^{E}F (143^{E}C) a sufficient amount of asphalt cement to conduct the test.

10.2 Place *the* sample of loose mixture in a beaker or beakers (never fill more than 2 of beaker) and weigh the beaker, rod and mixture in air. Record the weight as M_A. If a compacted specimen is used, then it shall be warmed in an oven to a temperature where the mixture is workable and manually separated.

10.3 Reheat mixture to 290 ^{E}F (143 ^{E}C) and add a sufficient amount of asphalt cement to cover the mixture allowing for mix consolidation and air removal (usually fill 2/3 - 3/4 of beaker).

10.4 Place *beaker*, rod, mixture and asphalt cement in the oven so that the mixture is at 290^{E}F (143^{E}C). Remove in twenty-minute intervals and stir slowly and thoroughly allowing entrapped air to be released. Return to oven.

10.5 Once it has been determined that all entrapped air is removed (when no air bubbles rise to the surface), allow the sample to cool to room temperature (usually over night).

10.6 Weigh the *beaker*, rod, mixture and asphalt cement in air and record the weight at T_A.

10.7 Place the *beaker* or beakers (including rod) in a constant temperature water bath at 77 ^{E}F (25 ^{E}C)

10.8 Allow *beaker* or beakers to attain a temperature of 77 ^{E}F (25^{E}C) for approximately two hours.

10.9 Remove *beaker* or beakers from water bath and weigh in 77 ^{E}F (25^{E}C) submersion tank. Record weight as T_w.

11. Calculations

11.1 Calculate the theoretical maximum specific gravity of the mixture as follows:

$$Gmm = \frac{M_A - R_A - B_A}{(T_A - R_A - B_A) - (T_w - R_w - B_w) - \frac{(T_A - M_A)}{G_b}}$$

Where:

Gmm = Theoretical maximum specific gravity of mixture.

M_A = Total weight in air of the beaker, rod and mixture.

T_A = Total weight in air of the beaker, rod, mixture and asphalt cement.

R_A = Weight of rod in air.

B_A = Weight of beaker in air.

T_w = Total weight (while suspended in water at 77 ^{EF} (25 ^{E}C) of the beaker, rod, mixture and asphalt cement.

B_w = Weight of beaker while suspended in water at 77 ^{EF} (25 ^{E}C)

R_w = Weight of rod while suspended in water at 77 ^{EF} (25 ^{E}C)

G_b = Specific gravity of asphalt cement at 77 ^{E}F (25 ^{E}C)

12. Report

12.1 Report the *theoretical* maximum specific gravity of the mixture to the nearest 0.001 at 77 ^{E}F (25 ^{E}C).

12.2 Type of *mixture*.

12.3 Sample *identification* information.

13. Precision

13.1 Ninety-five percent of tests conducted by a single operator should be within 0.012 based on 118 pairs of tests conducted at the Michigan Department of Transportation.

13.2 Multi-*laboratory* precision. This method has not yet had multi-laboratory correlation.

MICHIGAN TEST METHOD
FOR
HMA MARSHALL MIX DESIGN PROCEDURE

1. Scope

1.1 This procedure is intended to describe modifications to ASTM standards, and to provide appropriate references for the design of HMA paving mixtures by the Marshall Method.

2. Referenced Documents

2.1 ASTM *Standards:*
D 1559
D 2726

2.2 MTM Standards:
MTM 306
MTM 308

2.3 Other *Documents:*
Asphalt Institute Manual MS-2

3. Definitions

3.1 Definitions are in accordance with the Asphalt Institute Manual MS-2 except that absorbed asphalt is included as part of the voids in mineral aggregate.

4. Modification of Marshall

4.1 Preparation of mixture, compaction of specimens and specimen testing for resistance to plastic flow are all performed in accordance with ASTM D 1559 with the following exceptions:

4.1.1 *D 1599, Preparation of Mixtures*: Rather than a separate batch for each specimen, one batch is made for all specimens at each asphalt content.

4.1.2 *D 1599, Determination of Mixing and Compacting Temperatures*: Mix preparation and specimen compaction are both done at 290 F (143 C) rather than varying temperature according to viscosity.

5. Specific Gravity Marshall Specimens

5.1 Testing for the Specific Gravity of compacted Marshall specimens is performed in accordance with ASTM D 2726.

6. Maximum Theoretical Specific Gravity

6.1 Testing for maximum theoretical specific gravity (Gmm) is performed in accordance with Michigan Test Method 308-91.

NOTE: Two theoretical Gmm tests are conducted for each of the four test points when a full mix design is conducted. The effective specific gravity (Gse) is calculated based on each Gmm. The average Gse of each test point must differ by no more than 0.015. A minimum of three Gmm tests are conducted for one-point designs. Allowable variance for the three Gmm tests for one-point designs is 0.012 for top and leveling course designs and 0.020 for base course designs.

7. Calculations

7.1 Calculations are performed in accordance with The Asphalt Institute Manual MS-2, except that absorbed asphalt is included as part of the voids in mineral aggregate (VMA).

8. Optimum Asphalt Content

8.1 The Michigan Department of Transportation procedure for targeting optimum asphalt content is as follows:

8.1.1 *For* shoulders, design for 2.0 percent air voids.

8.1.2 *For* most low traffic volume trunk lines, design for 3.0 percent air void.

8.1.3 For trunk lines with high traffic volumes, design for 2.5 to 3.5 percent air voids - usually 3.0 percent.

8.1.4 For *temporary* roadways (two seasons use or less), design for 3.0 to 4.0 percent air voids - usually 3.5 percent.

8.1.5 For all *designs*, the fines to asphalt ratio shall not exceed 1.2 percent.

9. Rejected Mix Designs

9.1 If at the optimum asphalt content the mixture fails to meet stability, flow or VMA requirements, the mix design is rejected and a new mix design with a different gradation and/or different aggregates will be required. On trunk lines with high traffic volumes, close attention is made to the maximum unit density to try to avoid designing a mix with the optimum asphalt content exceeding this value.

0. Modifications

10.1 It should be noted that this procedure is a guideline only, and variations from it are sometimes necessary. Other factors which should be taken into account when determining optimum asphalt content are: roadway vertical alignment; traffic turning movements; commercial traffic volumes; environmental conditions; construction conditions; previous behavior of the aggregate in HMA mixtures; and the surface upon which the mixture is being placed.

MICHIGAN TEST METHOD
FOR
DETERMINING AGGREGATE GRADATION FOR BITUMINOUS MIXTURE

1. Scope

7 This test method describes a rapid procedure for determining the aggregate gradation in a bituminous mixture.

2. Applicable Documents

2.1 ASTM Standards:
C136 Sieve analysis of fine and coarse aggregates.
E11 Wire Cloth Sieves for testing purposes.

2.2 MDOT Publications:
Bituminous Plant Procedures Manual.

3. Reagents

3.1 An effective biodegradable solvent which produces a non-hazardous waste must be used.

4. Apparatus

4.1 Pans or bowls - 10 quart (9.5 liter) capacity.

4.2 Balance or scale accurate to within 0.1% of the initial weight of the test sample at any point within the range used.

4.3 Sieves conforming to ASTM E11: one No. 8 (2.36 mm) and one No. 200 (75 µm).

5. Procedure

5.1 Obtain a representative sample of the bituminous mixture according to MDOT Bituminous Plant Procedures Manual.

5.2 Reduce sample to proper size (approx. 2500 grams) using MDOT box method or quartering method.

5.3 Dry reduced sample for 15 to 30 minutes in an oven at 280 F 25 F (138 C + 14 C) and weigh to the nearest 0.1 gram.

5.4 *Determine asphalt cement content for the mixture sample as follows*:

$$P_b = \frac{100 \times G_b \times (G_{se} - G_{mm})}{G_{mm} \times (G_{se} - G_b)}$$

Where:

P_b = percent asphalt (%)

G_b = specific gravity of asphalt

G_{se} = effective specific gravity of aggregate from mix design.

G_{mm} = maximum theoretical specific gravity of mixture (tested valve).

5.5 Place the mixture in a pan or bowl and cover with solvent for 15 to 30 minutes. Frequently agitate the sample gently with a spatula during this time.

5.6 Decant solvent over No. 8 (2.36 mm) and No. 200 (75 µm) sieves. Dispose of solvent by an approved method. Add water to the sample, agitate and decant over the No. 8 (2.36 mm) and No. 200 (75 µm) sieves. Continue washing with water until wash water is clear. Care should be taken to avoid the loss of particles.

5.7 Dry sample to a constant weight in an oven or on a hot plate. Avoid excessive temperature in the drying process.

5.8 Conduct a sieve analysis of the aggregate according to ASTM C136.

6. Calculations

6.1 Calculate the total dry weight of the aggregate as follows:

$$W_{agg} = W_{mix} \times (1 - P_b/100)$$

Where:

W_{agg} = total dry weight of the aggregate

W_{mix} = total dry weight of the mix

P_b = percent asphalt (%) determined in Section 5.4

MICHIGAN TEST METHOD
FOR
STANDARD PRACTICE OF SAMPLING
HMA PAVING MIXTURES

1. Scope

8 This practice covers sampling of HMA paving mixtures at points of manufacture, storage, or delivery.

1.2 The values stated in acceptable metric units are to be regarded as the standard. The values in parentheses are provided for information purposes only.

2. Referenced Documents

2.1 ASTM Standards:

C 702	Practice for Reducing Field Samples of Aggregate to Testing Size[2]
D 979	Standard Practice for Sampling HMA Paving Mixtures[5]
D 2234	Test Method for Collection of a Gross Sample of Coal[3]
D 3665	Practice for Random Sampling of Construction Materials[5]
E 105	Practice for Probability Sampling of Materials[4]
E 122	Practice for Choice of Sample Size to Estimate the Average Quality of a Lot of Process[4]
E 141	Practice for Acceptance of Evidence Based on the Results of Probability Sampling[4]

3. Significance and Use

3.1 General:

3.1.1 Sampling is equally as important as the testing, and the sampler shall take every precaution to obtain samples that will yield an acceptable estimate of the nature and conditions of the materials that they represent.

3.1.2 Samples for the development of preliminary data are obtained by the party responsible for the development of the data. Samples for control of the product at the source of manufacture or storage, or at the site of use, are obtained by the manufacturer, Contractor, or other parties responsible for accomplishing the work. Samples for tests to be used in acceptance or rejection decisions by the purchaser are obtained by the purchaser or his authorized representative.

4. Procedure

4.1 Inspection - The material shall be inspected to determine discernible variations. The seller shall provide equipment needed for safe and appropriate inspection and sampling.

4.2 Sampling - The procedures for selecting locations or times for sampling are described in Practice D 3665.

4.2.1 *Sampling from a Conveyor Belt* - Stop the conveyor belt. Randomly select at least three areas of approximately equal size on the belt for sampling. In each of the locations to be sampled, insert templates, the shape which conforms to the shape of the belt. From the selected areas obtain approximately equal increments of material which will form a sample whose quantity equals or exceeds the minimum recommended in 4.3.2. Carefully scoop all material between templates into a suitable container.

4.2.2 *Sampling from Truck Transports or Paver Hoppers* - By a random method, select the units to be sampled from the production of materials delivered. Obtain at least three approximately equal increments. Select at random from the unit being sampled and combine to form a field sample whose quantity equals or exceeds the minimum recommended in 4.3.2. The sample may be obtained by collecting the increments with a scoop or shovel.

4.2.3 *Sampling from the Roadway Prior to Compaction* - When only one sample is to be taken, obtain at least three approximately equal increments, selected at random from the unit being sampled, and combine to form a field sample whose quantity equals or exceeds the minimum recommended in 4.3.2.

4.2.3.1 When three or more samples are to be taken in order to evaluate a lot of material, utilize a random method to locate the locations to be sampled. Select a sample from each location, assuring the quantity of each sample exceeds the minimum recommended in 4.3.2.

4.2.3.2 Take all increments or samples from the roadway for the full depth of the material, taking care to exclude any underlying material. When necessary, place templates on the existing roadway to exclude any underlying material. Clearly mark the specified area from which each increment or sample is to be removed. Templates which are placed before the mixture is spread will be a definite aid in securing approximately equal increment weights.

4.2.4 *Sampling from a Skip Conveyor Delivering Mixture to Bin Storage* - Select the units to be sampled from the skip conveyor by a random method based on the bin's storage capacity. Stop the skip conveyor immediately following pug mill discharge. Dig a furrow 6 in. (150 mm) in depth extending from the top to the bottom of the pile. Obtain three approximately equal increments from the top, middle, and bottom of the furrow depositing each portion in a container. The combined portions should form a field sample whose quantity equals or exceeds the minimum recommended in 4.3.2.

4.2.5 *Sampling from a Funnel Device Feeding a Conveyor for Mixture Delivery to Storage* - Select the units to be sampled from the funnel device by a random method based on the bin's maximum storage capacity. Obtain at least three approximately equal increments of material for each sample by passing a bucket or pan or other suitable container across the full flow of materials as it drops from the funnel device onto the conveyor. The combined portions should form a field sample whose quantity equals or exceeds the minimum recommended in 4.3.2.

4.2.6 *Sampling from Roadway after Compaction* - Select the units to be sampled by a random method from the material in place. Obtain at least three approximately equal increments selected at random from the unit being sampled. Test each increment and average the test results to determine the acceptability. Take all increments from the roadway for the full depth of the material, taking care to exclude any underlying material. Each increment shall be obtained by coring, sawing, or other methods in such a manner as to ensure a minimum disturbance of the material.

4.2.7 *Sampling HMA Loose Mix from Wedging* – Stick the mat to find the width that meets the minimum thickness required for coring. The width subject to loose mix sampling and coring will need to meet the minimum thickness required for coring for the particular nominal max aggregate size in the mix. If this width is less then 3 feet use a mini-stockpile for sampling.

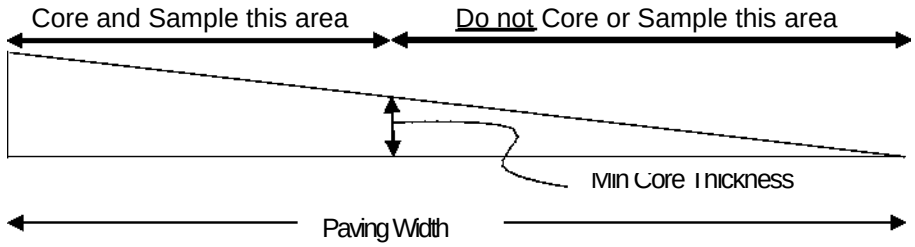

Figure 2: Sampling from Wedging; only sample from pavement area that meets minimum core thickness.

4.2.8 *Sampling HMA Loose Mix from Mini-Stockpile* - Select the tonnage to be sampled by a random method. Have the Contractor form a mini-stockpile (approximately 3 to 5 tons). For one composite sample, take at least four approximately equal increments of material from around the stockpile (front, back, right, and left) and at different heights. At each location around the stockpile, obtain an increment of the sample by digging into the pile approximately one foot, forming a vertical face to remove the segregated material. The shovel is then brought up the entire vertical face to obtain the sample; this material will be placed in a bucket with all other

increments sampled from that stockpile to form one composite sample.

4.3 Number and Quantities of Field Samples:

4.3.1 The number of field samples (obtained by one of the methods described in 4.2) required depends on the criticality of, and variation in, the properties to be measured. Designate each unit from which a field sample is to be obtained prior to sampling. The number of field samples from the production should be sufficient to give the desired confidence in test results.

NOTE 1- Guidance for determining the number of samples required to obtain the desired level of confidence in test results may be found in Method D 2234, Practice E 105, Practice E 122, and Practice E 141.

4.3.2 A guide to the quantity of material in field samples is given in Table 1. The quantities depend on the type and number of tests to which the material is to be subjected, and sufficient material must be obtained to provide for the proper execution of these tests. Standard control and acceptance tests are covered by ASTM Standards and specify the portion of the field sample required for each specific test.

TABLE 1
Guide for Estimating Quantity of Sample

Maximum Nominal Size, of Aggregates[A]	Approximate Weight of Uncompacted Mixture, min, lb (kg)	Approximate Area of Compacted Mixture, min, in^2 (cm^2)
No. 8 (2.36-mm)	4 (1.8)	36 (232)
No. 4 (4.75-mm)	4 (1.8)	36 (232)
3/8" (9.5-mm)	8 (3.6)	36 (232)
2" (12.5-mm)	12 (5.4)	64 (413)
3/4" (19.0-mm)	16 (7.3)	100 (645)
1" (25.0-mm)	20 (9.1)	144 (929)
1-1/2" (38.1-mm)	25 (11.3)	144 (929)
2" (50-mm)	35 (15.9)	225 (1453)

[A]**The nominal maximum size of aggregate is the largest sieve size listed in the applicable specification upon which any material is permitted to be retained.**

Generally, the amounts specified in Table 1 will provide adequate material for routine testing. Extract test portions from the field sample by quartering or splitting in a similar manner to Practice C702 or as required by other applicable test methods.

NOTE 2 - The approximate areas of a sample for a given weight are given in Table 1. These dimensions are based on normal lay down thicknesses for each aggregate size. Differences in thickness, specific gravity of the aggregate and mix design will cause some variance in these areas.

5. Shipping Samples

5.1 Transport samples in containers so constructed as to preclude loss or contamination of any part of the sample, or damage to the contents from mishandling during shipment.

5.2 Samples shall have individual identification attached giving the information required by the sample user. Typical information that may be useful could include, but not necessarily be limited to, the following:

5.2.1 Job for which the material is to be used, giving project number, highway route number, county, and other pertinent geographical information.

5.2.2 Source of sample, including for plant-mixed samples the name of owner or operator of plant, location of plant, type of plant, size of batch, and identification of bitumen and mineral aggregates used in the mixture.

5.2.3 Point at which sampled, for samples taken from roadway, both by station number and location transversely in pavement; also whether sampled from completed pavement windrow, etc.

5.2.4 Quantity represented.

5.2.5 By whom sampled and title.

5.2.6 Date of most recent mixing, if road-mixed.

5.2.7 Date sampled.

5.2.8 By whom submitted and address.

5.2.9 Purpose for which sample was taken.

5.2.10 To whom report is to be made.

APPENDIX
(Non-mandatory Information)

NUMBER AND SIZE OF INCREMENTS NEEDED TO ESTIMATE CHARACTER OF UNIT SAMPLED

X. Scope

X1. This appendix presents the rationale used by the responsible committee in the development of this Practice.

X2. Descriptions of Terms Specific to This Standard

X2.1 Field sample - a quantity of the material to be tested of sufficient size to provide an acceptable estimate of the average quality of a unit.

X2.2 Lot - a sizable isolated quantity of bulk material from a single source, assumed to have been produced by the same process (for example, a day's production or a specific mass or volume).

X2.3 Test portion - a quantity of the material of sufficient size extracted from the larger field sample by a procedure designed to ensure accurate representation of the field sample, and thus of the unit sampled.

X2.4 Unit - a batch of finite subdivision of a lot of bulk material (for example, a truckload or a specific area covered).

X3. Test Unit, Size, and Variability

X3.1 The unit to be represented by a single field sample should not be so large as to mask the effects of significant variability within the unit. Neither should a unit be so small as to be affected by the inherent variability between small portions of any bulk material.

X3.2 A unit of bulk material composed of graded aggregate or aggregate mixtures might consist of a full truckload. If it were possible, the entire load might be tested; as a practical matter, a field sample is composed of three or more increments chosen at random from the material, as it is loaded or unloaded from the truck. Research has shown that such a procedure permits an acceptable estimate to be made of the average gradation that might be measured from 15 or 20 increments from the truck.

X3.3 Significant variability with a lot of material, where it might exist, should be indicated by statistical measures, such as the standard deviation between units selected at random from within the lot.

[2] Annual book of ASTM Standards, Vol 04.02.
[3] Annual book of ASTM Standards, Vol 05.05.
[4] Annual book of ASTM Standards, Vol 14.02.
[5] Annual book of ASTM Standards, Vol 04.03.

MICHIGAN TEST METHOD
FOR
THEORETICAL MAXIMUM SPECIFIC GRAVITY
OF HMA PAVING MIXTURES

1. Scope

1.1 This test method covers the determination of the theoretical maximum specific gravity and density of uncompacted HMA paving mixtures at 77 EF (25 EC).

1.2 The values stated in SI units are to be regarded as the standard.

2. Referenced Documents

2.1 *ASTM Standards*:

D979	Test Methods for Sampling HMA Paving Mixtures[2]
D 2041	Standard Test Method for Theoretical Maximum Specific Gravity and Density of HMA Paving Mixtures[2]
D4311	Practice for Determining Asphalt Volume Correction to a Base Temperature[2]
E 1	Specification for ASTM Thermometers[3]
E 12	Terminology Relating to Density and Specific Gravity of Solids, Liquids, and Gases[4]

3. Terminology

3.1 The terms specific gravity and density used in this test method are in accordance with Terminology E 12.

3.2 *Definitions:*

3.2.1 *Density, as determined by this test method* - the mass of a cubic meter of the material at 77 EF (25 EC) in SI units, or the mass of a cubic foot of the material at 77 EF (25 EC) in inch-pound units.

3.2.2 *Residual pressure, as employed by this test method* - the pressure in a vacuum vessel when vacuum is applied.

3.2.3 *Specific gravity*, as determined by this test method - the ratio of a given mass of material at 77 EF (25 EC) to the mass of an equal volume of water at the same temperature.

4. Summary of Test Method

4.1 A weighed sample of HMA paving mixture in the loose condition is placed in a vacuum vessel. Sufficient water at a temperature of 77 ∀ 1.8 EF (25 ºC ∀ 1.0 EC) is added to completely submerge the sample. Vacuum is gradually applied

to reduce the residual pressure in the vacuum vessel to 25 +/-2 mm of Hg and then held for 15 +/- 2 min. At the end of the vacuum period, the vacuum is gradually released. The volume of the sample of paving mixture is obtained by immersing the vacuum container with sample into a water bath and weighing. At the time of weighing, the temperature is measured as well as the mass. From the mass and volume measurements, the specific gravity or density at 77 EF (25 EC) is calculated

5. Significance and Use

5.1 The theoretical maximum specific gravities and densities of HMA paving mixtures are intrinsic properties whose values are influenced by the composition of the mixtures in terms of types and amounts of aggregates and HMA materials.

5.1.1 They are used to calculate values for percent air voids in compacted HMA paving mixtures.

5.1.2 They provide target values for the compaction of paving mixtures.

5.1.3 They are essential when calculating the amount of bitumen absorbed by the internal porosity of the individual aggregate particles in a HMA paving mixture.

6. Apparatus

6.1 *Vacuum container,* for weighing in air and water shall be a 4500 mL metal vacuum pycnometer with a clear plastic lid.

6.2 *Balance*, with ample capacity, and with sufficient sensitivity to enable the specific gravity of samples of uncompacted paving mixtures to be calculated to at least four significant figures, that is, to at least three decimal places. It shall be equipped with a suitable apparatus to permit weighing the specimen in water while suspended from the center of the scale. Use wire or fish line of the smallest practical size to suspend the specimen holder. Do not use chains, strings, or sash cords. The balance shall conform to Specification D 4753 as a class GP2 balance.

6.3 *Vacuum pump or water aspirator*, capable of evacuating air from the vacuum container to a residual pressure of 25 +/- 2 mm of Hg.

6.3.1 When a vacuum pump is used, a suitable trap of one or more 1000 mL filter flasks, or equivalent, shall be installed between the vacuum vessel and vacuum source to reduce the amount of water vapor entering the vacuum pump.

6.4 *Residual pressure manometer*[5] *or calibrated digital absolute pressure gage (either)*, must be connected directly to the vacuum vessel at the end of the

vacuum line and be capable of measuring residual pressure down to 25 +/- 2 mm of Hg.

NOTE 1 - An example of a correct arrangement of the testing equipment is shown in Fig. 1.

NOTE 2 - Residual pressure in the vacuum vessel measured in millimeters of mercury, is the difference in the height of mercury in the Torricellian vacuum leg of the manometer and the height of mercury in the other leg of the manometer that is attached to the vacuum vessel.

6.5 *Manometer or vacuum gauge*, suitable for measuring the vacuum being applied at the source of the vacuum. This is required to check the reading given by the residual pressure manometer attached directly to the vacuum vessel.

NOTE 3 - The Torricellian vacuum leg of the manometer occasionally acquires one or more bubbles of air that introduce error into the residual pressure reading. By the addition of the vacuum gage, this error can often be quickly detected by the differences between two vacuum measurements.

6.6 *Thermometers*, calibrated liquid-in-glass thermometers of suitable range with subdivisions and maximum scale error of 0.9 EF (0.5 EC), or any other thermometric device of equal accuracy, precision and sensitivity shall be used. Thermometers shall conform to the requirements of Specification E 1.

6.7 *Water Bath,* when weighing-in-water, must be suitable for immersion of the suspended container with its de-aerated sample and capable of maintaining a constant temperature between 68 EF (20 ºC) and 86 EF (30 EC). The use of an overflow outlet is mandatory.

6.8 *Bleeder valve*, attached to the vacuum train to facilitate adjustment of the vacuum being applied to the vacuum vessel and the slow release of vacuum pressure.

6.9 *Mechanical agitation device,* capable of applying a gentle but consistent agitation of the sample. This device shall be equipped with a means of firmly anchoring the container so that it does not move on the surface of the device.

6.10 *Protective gloves*, used when handling glass equipment under vacuum.

7. Sampling

7.1 Obtain the sample in accordance with Test Methods D979.

7.2 The size of the sample shall conform to the following requirements. Sample Sizes greater than about two thirds of the volume of the container shall be tested in portions with none of the portions tested being less than 1250 g.

Nominal Maximum Aggregate Size

	in. (mm)	Minimum Sample Size, g
1	(25.0) or greater	2500
¾	(19.0) or smaller	2000

8. Calibration of Pycnometer

8.1 Calibrate the container by accurately determining the mass of the container dry (B) and in water (E) at 77 E ∀ 1.8 EF (25 EC ∀ 1.0 EC). Verify the dry weight (within ∀ 0.1g) daily.

8.2 The equipment must be kept clean.

9. Procedure

9.1 Separate the particles of the sample of paving mixture by hand, taking care to avoid fracturing the aggregate, so that the particles of the fine aggregate portion are not larger than 1/4 inch (6.3 mm).

9.2 Cool the sample to room temperature, place it in the container and weigh. Designate the net mass of the sample as sample and bowl weight in air (A). Add water at a temperature of approximately 77 EF (25 EC) to cover the sample with a minimum of 1 inch of water. The water level surface should be at least 1 ½ inches from the top of the pycnometer bowl.

9.3 Remove air trapped in the sample by starting the agitation and gradually increasing the vacuum until the residual pressure manometer reads 25 +/- 2 mm of Hg. Maintain this residual pressure for 15 +/- 2 minutes. Agitate the container and contents during the vacuum period continuously by a mechanical device.

9.4 At the end of the vacuum period, gradually release the vacuum using the bleeder valve. Suspend the container and contents in the water bath and determine the mass after 10 minute ∀ 1 minute immersion. Record the mass of the sample and bowl weight in water (D) at 77 EF (25 EC).

10. Calculations

10.1 Calculate the theoretical maximum specific gravity of the sample at 77 EF (25 EC) as follows:

Sample and Bowl Wt. in Air, grams	A	_____
Bowl Wt. in Air, grams	B	_____
Sample Wt. in Air, grams	C=A-B	_____
Sample and Bowl Wt. in Water, grams	D	_____
Bowl Wt. in Water, grams	E	_____
Sample Wt. in Water, grams	F=D-E	_____
Volume, cc	G=C-F	_____
Gmm	C/G	_____

10.2 If the sample was tested in several portions, report the weighted average maximum specific gravity for all portions tested.

11. Report

11.1 *Report the following information*:
- Specific gravity of the mixture to the third decimal place
- Type of mixture,
- Size of sample,
- Number of samples.

[2]Annual Book of ASTM Standards, Vol 04.03.
[3]Annual Book of ASTM Standards, Vol 14.03.
[4]Annual Book of ASTM Standards, Vol 15.05.
[5]Sargent Welch, 39745 Gauge-Vacuum, Mercury Pre-filled (or equivalent).

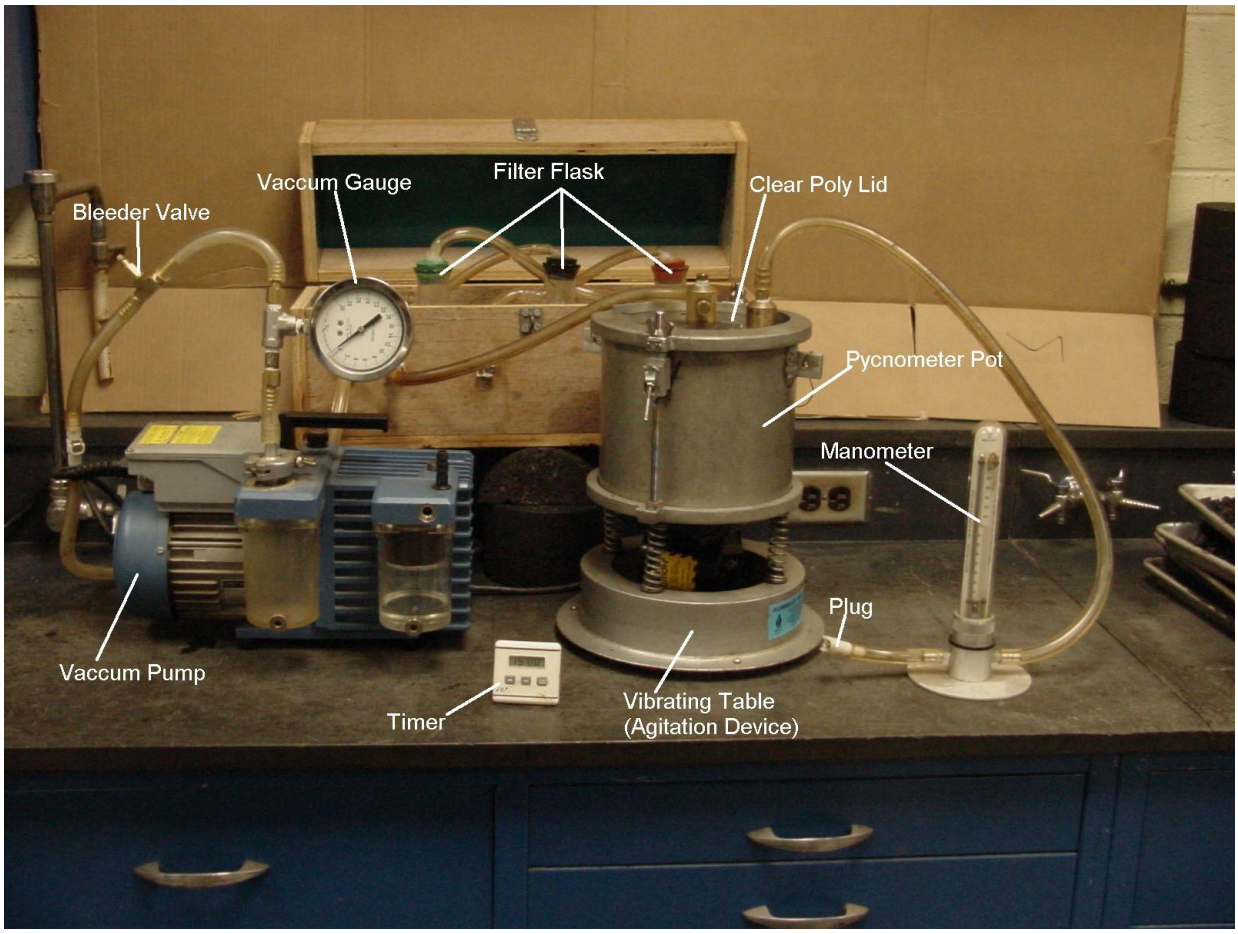

Figure 1

MICHIGAN TEST METHOD
FOR
BULK SPECIFIC GRAVITY AND DENSITY OF COMPACTED HMA MIXTURES USING SATURATED SURFACE-DRY SPECIMENS

1. Scope

1.1 This test method covers the determination of bulk specific gravity and density of specimens of compacted HMA mixtures.

1.1.2 This test method should be used only with dense graded or practically nonabsorptive compacted mixtures.

1.2 The values stated in SI units are to be regarded as the standard.

2. Referenced Documents

2.1 *ASTM Standards*:
C 670 Practice for Preparing Precision and Bias Statements for Test Methods for Construction Materials[2]
D 979 Practice for Sampling HMA Paving Mixtures[3]
D 1461 Test Method for Moisture or Volatile Distillates in HMA Paving Mixtures[2] D 2726 Standard Test Method for Bulk Specific Gravity and Density of Compacted HMA Mixtures Using Saturated Surface-Dry Specimens[3]
D 3203 Test Method for Percent Air Voids in Compacted Dense and Open HMA Paving Mixtures[3]
D 3666 Practice for Evaluating and Qualifying Agencies Testing and Inspecting HMA Paving Material[3]
D 4753 Specification for Evaluating, Selecting, and Specifying Balances and Scales for Use in Testing Soil, Rock, and Related Construction Materials[4]

3. Terminology

3.1 Descriptions of Terms:

3.1.1 *Bulk density* - as determined by this test method, the mass of a meter cubed of the material at 77 BF (25 BC).

3.1.2 *Bulk specific gravity* - as determined by this test method, the ratio of the mass of a given volume of material at 77 BF (25 BC) to the mass of an equal volume of water at the same temperature.

4. Summary of Test Method

4.1 The specimen is immersed in a water bath at 77 BF (25 BC). The mass under water is recorded, and the specimen is taken out of the water, blotted quickly with a damp towel, and weighed in air. The difference between the two masses is used to

measure the mass of an equal volume of water at 77 F (25 C). Correction factors are provided for converting the mass of water to that of the reference 77 F (25 C) if from a practical point of view the weighing was done at different temperatures.

4.2 This test method provides guidance for determination of the oven dry or thoroughly dry mass of the specimen. The bulk specific gravity is calculated from these masses. Then the density is obtained by multiplying the specific gravity of the specimen by the density of the water.

5. Significance and Use

5.1 The results obtained from this test method can be used to determine the unit weight of compacted dense HMA mixtures and in conjunction with Test Method D 3203, to obtain percent air voids. These values in turn may be used in determining the relative degree of compaction.

5.2 Since specific gravity has no units, it must be converted to density in order to do calculations that require units. This conversion is made by multiplying the specific gravity at a given temperature by the density of water at the same temperature.

NOTE 1 -The personnel and equipment used in performing this test can be evaluated in accordance with Practice D 3666.

6. Apparatus

6.1 Balance, with ample capacity, and with sufficient sensitivity to enable bulk specific gravities of the specimens to be calculated to at least four significant figures, that is, to at least three decimal places. It shall be equipped with a suitable apparatus to permit weighing the specimen while suspended in water. The balance shall conform to Specification D 4753 as a class GP2 balance.

NOTE 2 - Since there are no more significant figures in the quotient (bulk specific gravity) than appear in either the dividend (the mass of the specimen in air) or in the divisor (the mass of the volume of water equal to the volume of the specimen, obtained from the difference in weight of the saturated surface-dry specimen in air and in water), this means that the balance must have a sensitivity capable of providing both mass values to at least four figures. For example, a sensitivity of 0.1 g would provide four significant figures for mass in the range from 100.1 g to 999.9 g.

6.2 Water Bath, for immersing the specimen in water while suspended, equipped with an overflow outlet for maintaining a constant water level.

7. Sampling

7.1 Specimens may be either laboratory-molded HMA mixtures or from HMA pavements.

7.2 Obtain field samples in accordance with Practice D 979.

7.3 Pavement specimens shall be taken from pavements with a core drill, diamond or a carborundum saw, or by other suitable means.

8. Test Specimens

8.1 Size of Specimens - it is recommended, (1) that the diameter of cylindrically molded or cored specimens, or the length of the sides of sawed specimens, be at least equal to four times the maximum size of the aggregate; and (2) that the thickness of specimens be at least one and one half times the maximum size of the aggregate.

8.2 Care shall be taken to avoid distortion, bending, or cracking of specimens during and after removal from pavements or mold. Specimens shall be stored in a safe, cool place.

8.3 Specimens shall be free of foreign materials such as seal coat, tack coat, foundation material, soil, paper, or foil. When any of these materials are visually evident, they shall be removed by sawing in accordance with 8.6.

8.4 If desired, specimens may be separated from other pavement layers by sawing or other satisfactory means.

9. Procedure

9.1 For Specimens that Contain Moisture or Solvent, or Both:

9.1.1 *Mass of Specimen in Water* - Immerse the specimen in a water bath at 77 BF (25 BC) for 3 to 5 minutes, then weigh in water. Designate this mass as "C". If the temperature of the specimen differs from the temperature of the water bath by more than 2 ^{o}C, the specimen shall be immersed in the water bath for 10 to 15 minutes.

9.1.1.1 Measure the temperature of the water and if different from 77 BF V 1.8 BF (25 BC V 1 BC) a correction to the bulk specific gravity to 77 BF (25 BC) must be made in accordance with 10.2.

9.1.2 *Mass of Saturated Surface-Dry Specimen in Air* - Surface dry the specimen by blotting quickly with a damp towel and then weigh in air. Designate this mass as B.

9.1.3 *Mass of Oven-Dry Specimen* - Thoroughly dry the specimen to constant mass at 230 BF V 9 BF (110 BC V 5 BC). Allow the specimen to cool and weigh in air. Designate this mass as A.

9.2 For Thoroughly Dry Specimens:

9.2.1 *Mass of Dry Specimen in Air* - Weigh the specimen after it has been standing in air at room temperature for at least 1 h. Designate this mass as A.

9.2.2 *Mass of Specimen in Water* - Use the same procedure as described in 9.1.1.

9.2.3 Mass of Saturated Surface-Dry Specimen in Air - Surface dry the specimen by blotting quickly with a damp towel and then weigh in air. Designate this mass as *B.*

10. Calculation

10.1 *Calculate the bulk specific gravity of the specimen as follows*:

Bulk sp gr = A / (B - C)

where:

A = mass of the dry specimen in air, g,
(B-C) = mass of the volume of water for the volume of the specimen at 77 BF (25 BC),
B = mass of the saturated surface-dry specimen in air, g, and
C = mass of the specimen in water, g.

10.2 The bulk specific gravity of the specimen at 77 BF (25 BC) can be calculated from bulk specific gravity of the specimen measured at any other temperature as follows:

Bulk sp gr at 77 BF (25 BC) = K x Bulk sp gr measured at any other temperature

Where:

K is determined from Table 1.

10.2.1 This calculation is valid for the precision of the test method if the temperature of the water differs from 77 BF (25 BC) by less than 5.4 BF (3 BC). For a difference of temperature greater than 5.4 BF (3 BC), a correction to the mass of water displaced shall be made using the following equation:

Correction =_ΔT x Ks x (B - C)

Where:

ΔT = 77 BF (25 BC) - the temperature of the water bath, and
Ks = 6×10^{-5} mL/mL/^{0}C average coefficient of cubical thermal expansion of HMA concrete.

TABLE 1		
Absolute Density of Water and Conversion Factor K for Various Temperatures		
Temperature, ^{o}C	Absolute Density of Water[A]	Correction Factor K
10	0.999728	1.002661
11	0.999634	1.002567
12	0.999526	1.002458
13	0.999406	1.002338
14	0.999273	1.002204
15	0.999129	1.002060
16	0.998972	1.001903
17	0.998804	1.001734
18	0.998625	1.001555
19	0.998435	1.001364
20	0.998234	1.001162
21	0.998022	1.000950
22	0.997801	1.000728
23	0997569	1.000495
24	0.997327	1.000253
25	0.997075	1.000000
26	0.996814	0.999738
27	0.996544	0.999467
28	0.996264	0.999187
29	0.995976	0.998898
30	0.995678	0.998599
[A]Data taken from Handbook of Chemistry and Physics, 55th ed., CRC Press, Inc.		

10.3 Calculate the density of the specimen as follows:

Density = Bulk sp gr x 997.0 (or 62.24)

Where:

997.0 = density of water in kg/m^3 at 25 ^{o}C (0.9970 g/cm^3)

10.4 This test method has been written using the absolute system for density (kilograms per meter cubed) in SI units. The conversion to the gravitational system of unit weight in pounds per foot cubed and the recording of density in pounds force per foot cubed is acceptable with this test method.

11. <u>Report</u>

11.1 Report the following:

- Bulk specific gravity of the mixture to three decimal places as: bulk specific gravity at 77 F (25 C),

- Density of the mixture with four significant figures in kg/m^3 or lb/ft^3 as: density at 77 F (25 C),
- Type of mixture, and
- ,Size of sample.

12. Precision and Bias

12.1 Criteria for judging the acceptability of bulk specific gravity test results obtained by this test method are given in the following table:[5]

	Standard Deviation test and Type Index (IS)	Acceptable Range of Two Results (D 2S)
Single operator precision	0.0124	0.035
Multi-laboratory precision	0.0269	0.076

NOTE 3 - Samples for the inter-laboratory study were prepared in three HMA mixing plants and were compacted by the individual laboratories with Marshall compaction equipment using 75 blows each end of the specimen. Mechanical compactors were also used, but they were calibrated to give compaction equivalents for the 75 blows of the manual equipment.

In a report[6] dated March 22, 1988, The University of Nevada-Reno concluded that "The ASTM D 2726 precision statement accurately reflects variances caused by either method of compaction (Marshall or Hveem), or by aggregate type (rounded or angular)."

12.2 The figures given in Column 2 are the standard deviations that have been found to be appropriate for the conditions of test described in Column 1. The figures given in Column 3 are the limits that should not be exceeded by the difference between the results of two properly conducted tests.

12.3 The values in Column 3 are the acceptable range for two tests. When more than two results are being evaluated, the range given in Column 3 must be increased. Multiply the standard deviation(s) in Column 2 by the multiplier given in Practice C 670, Table 1, for the number of actual tests. Example: for three tests - 0.0124 x 3.3 = 0.041. Additional guidance and background is given in Practice C 670.

12.4 Bias - Since there is no accepted reference material suitable for determining the bias for the procedure for measuring density, no statement on the bias of this test method is being made.

[2] Annual Book of ASTM Standards, Vol 04.02.
[3] Annual Book of ASTM Standards. Vol 04.03.
[4] Annual Book of ASTM Standards, Vol 04.08.
[5] Basis of estimate: 4 replicates, 6 materials, 16 laboratories.
[6] Supporting data available from ASTM headquarters. Request RR: 1004.

MICHIGAN TEST METHOD
FOR
DETERMINATION OF ASPHALT CONTENT
FROM ASPHALT PAVING MIXTURES BY THE IGNITION METHOD

1. Scope

1.1 This test method covers the determination of asphalt content of hot-mixed paving mixtures by ignition of the asphalt cement in a furnace. The aggregate remaining can be used for sieve analysis following ASTM C 136, ASTM C 117 and Crush Count MTM 117.

1.2 The values stated in metric units are to be regarded as the standard.

1.3 This process may involve hazardous materials, operations and equipment. This standard does not claim to address all of the safety and health issues associated with its use. It is the responsibility of each user to consult and establish appropriate safety and health practices and determine the applicability of regulatory limitations prior to use.

2. Referenced Documents

2.1 *ASTM* Standards
E 29 Rounding Method
D 979 Practice for Sampling HMA Paving Mixtures
C 136 Mechanical Analysis of Extracted Aggregate
C 117 Test Method for Material Finer Than No. 200 (75µm) Sieve in Mineral Aggregates by Washing
C 702 Practice for Reducing Field Samples of Aggregate to Testing Size
C 566 Total Moisture Content of Aggregate by Drying
D 75 Sampling Aggregates
D 140 Sampling HMA Materials

2.2 Furnace manufacturer=s instruction manual

2.3 *MDOT* Standards
MTM 117 Determining Percentage of Crushed Particles in Aggregates

3. Summary of Test Method

3.1 Asphalt in a sample of hot-mix paving material is burned by ignition. The asphalt content is calculated from the change in mass of the sample and is expressed as mass loss and a percentage of the total sample.

4. Apparatus

4.1 A forced air ignition furnace, capable of maintaining the temperature at 1202 F (650 C), with an internal balance thermally isolated from the furnace chamber

accurate to 0.1 gram. The balance must be capable of weighing a 3,000-gram sample in addition to the sample baskets. The furnace must calculate a temperature compensation factor for the change in the weight of the sample baskets and provide for the input of a correction factor for aggregate loss. The furnace must provide a printed ticket with the initial sample weight, sample weight loss, temperature compensation, correction factor, corrected asphalt content (%), test time and test temperature. The sample chamber dimensions must be at least 14 inches (356 mm) by 10.5 inches (267 mm) by 14 inches (356 mm) (W x H x D). A method for reducing furnace emissions must be provided.

The furnace must provide an audible alarm and an indicator light to indicate when the sample weight loss has remained constant for two consecutive minutes. The furnace door must be equipped with a locking mechanism to keep the door locked until the test procedure is complete.

NOTE: The National Center for Asphalt Technology (NCAT) Asphalt Content Tester manufactured by Barnstead/Thermolyne and distributed by QC Resource, (800) 296-7171, or an approved equal may be used.

4.2 A set of two or three tempered stainless steel No. 8 (2.36 mm) mesh or otherwise perforated baskets having an area for the sample of approximately 232 in.^{2} (0.15m^2). The baskets must have a minimum depth of 2 inches (50 mm) and be nested. A minimum of 1 inch (25 mm) air space is required between the catch pan the lower basket and must be open on all sides. A screen top to confine the aggregates, and a basket guard to keep the assembly together, must be provided with the assembly. A basket transfer device for placing and removing sample baskets from the furnace must also be included.

4.3 One stainless steel catch pan, dimensions (L x W x H) of 11 inches (280 mm) by 11 inches (280 mm) by 1 inch (26 mm).

4.4 Oven capable of maintaining 257 BF V 9 BF (125 BC V 5 BC).

4.5 Balance, 8 kg capacity, sensitive to 1.0 gram for weighing the sample in the baskets.

4.6 Safety Equipment: safety glasses or face shield, high temperature gloves and long-sleeve jacket. Additionally, a heat-resistant surface capable of withstanding 1202 BF (650 BC) and a protective cage capable of surrounding the sample baskets must be provided.

4.7 Miscellaneous Equipment: A pan or bowl of adequate size for transferring samples after ignition, spatulas, bowls and wire brushes.

5. <u>Sampling</u>

5.1 HMA test samples must be obtained according to ASTM D 979. The test sample must be the result of quartering a larger sample according to ASTM C 702. Sample size must be equal to calibration size V 10 grams if method I is used. Sample size

must be 100 10 grams greater than the calibration sample if method II is used. Samples must not exceed 2000 grams. If larger size samples are needed, the test sample may be divided into suitable increments, tested, and the results appropriately combined for calculation of asphalt content.

TABLE 1 Size of Sample	
Nominal Maximum Aggregate Size Standard	Minimum Mass of Sample Grams
No. 4 (4.75 mm)	1200
3/8 in. (9.5 mm)	1200
1/2 in. (12.5 mm)	1500
3/4 in. (19.0 mm)	2000
1 in. (25.0 mm)	3000
1 1/2 in.(37.5 mm)	4000

5.2 Aggregate used for the calibration samples will be sampled from the aggregate weigh belt or stockpiles, in accordance with ASTM D 75.

5.3 If RAP is used in the hot asphalt mix, it will be obtained from the RAP weigh belt, and calibration method I must be used.

5.4 Obtain samples of asphalt cement in accordance with ASTM D 140.

6. Calibration

6.1 Two calibration procedures are provided. Either method may be approved by the engineer. For mix designs containing RAP, the binder content of the RAP will be as reported on the mix design. If stockpiled aggregate samples are used for calibration samples, the aggregate must be blended to the proportions reported on the mix design.

6.2 Certain aggregate types may result in a high correction factor. Aggregate with a correction factor higher than 0.5 must be calibrated and tested at a lower temperature, as specified in section 6.6.11.

6.3 The calibration procedure for a given mix must be repeated for every 50,000 tons of mixture produced or as requested by the engineer.

6.4 A copy of the computer printout and a completed copy of Form 1912 must be submitted to the engineer or his representative.

6.5 Method I (Mixture Calibration)

6.5.1 This method may be affected by the type of aggregate in the mixture. Accordingly, to optimize accuracy, a calibration factor must be established with the testing of a set of calibration samples for each mix type. This procedure must be performed before any acceptance testing is completed.

6.5.2 Dry samples to a constant weight in oven 257 EF V 9 EF (125 EC V 5 EC) in accordance with ASTM C 566.

6.5.3 Heat the aggregates and asphalt cement to approximately 302 EF V 9 EF (150 EC V 5 EC). Heat all mixing bowls and tools to approximately 302 EF V 9 EF (150 EC V 5 EC).

6.5.4 Prior to mixing of calibration samples, an initial or Abutter@ mix is required to condition the mixing equipment. Remove and discard the Abutter@ mix from the bowl by scraping, leaving a uniform coating of asphalt mix residue. The butter mix prevents the calibration samples from being biased by the residual asphalt mix retained in the mixing bowl.

6.5.5 Prepare three calibration samples at the design asphalt cement content.

6.5.6 Preheat the ignition furnace to 1000 EF (538 EC) or to an approved established test temperature.

6.5.7 Input a correction factor of zero into the ignition furnace controller.

6.5.8 Weigh and record the weight of the sample baskets and catch pan (with cover and guard in place).

6.5.9 The freshly mixed samples may be placed directly in the sample baskets. If allowed to cool, the samples must be preheated in a 257 EF V 9 EF (125 EC V 5 EC) oven.

6.5.10 Distribute approximately equal portions of the calibration sample among the baskets, starting with the bottom basket in the catch pan. Use a spatula or trowel to level the sample, taking care to keep material away from the edges of the basket. Re-nest baskets in the catch pan as the sample is being distributed. Replace cover and guard on basket assembly.

6.5.11 Weigh and record the sample, baskets, catch pan and basket guard. Calculate and record the initial weight of the sample (total weight - the weight of the sample basket assembly) on form 1912.

6.5.12 Input the initial weight of the sample to the nearest gram into the ignition furnace controller. Verify that the correct weight has been entered.

6.5.13 Open the chamber door, then using the sample transfer device, place the baskets with the sample into the furnace. Close the chamber door and verify that the sample weight (including the baskets) displayed on the furnace's scale equals the total weight recorded in Section 6.5.8 within V 5 grams. Differences greater than 5 grams or failure of the furnace balance to stabilize may indicate that the sample baskets are in contact with the furnace wall and will invalidate the test. Initiate the test by pressing the

start/stop button. This will lock the sample chamber and start the combustion blower.

6.5.14 Allow the test to continue until the stable light and audible stable indicator indicates that the test is complete. Press the start/stop button. This will unlock the sample chamber and cause the printer to print out the test results.

6.5.15 Open the chamber door, then using the sample transfer device, remove the baskets with the sample. Place hot sample and basket assembly on a heatproof surface and place the protective cage over it. Allow to cool to room temperature (approximately 30 minutes).

6.5.16 Record the weight of the sample after ignition to the nearest 0.1 gram and calculate the calibration factor as follows.

$$C_F \quad \frac{(M_I \; M_L)\; 100\; P}{M_I}$$

Where:

C_F	=	calibration factor
M_I	=	total mass of the mixture calibration sample prior to ignition
M_L	=	total mass of the mixture calibration sample after ignition
P	=	percentage of actual asphalt cement in the mix by mass of the total mix expressed as a percent

6.5.17 Repeat these steps for the two additional calibration samples. Calculate the average calibration factor by averaging the three C_F values.

6.6 Method II (Virgin Aggregate Only - RAP Excluded)

6.6.1 This method may be affected by the type of aggregate in the mixture. Accordingly, to optimize accuracy, a calibration factor must be established with the testing of a minimum of three calibration samples for each mix type. This procedure must be performed before any acceptance testing is completed.

6.6.2 A minimum of three blended, aggregate only, calibration specimens are obtained from aggregate weigh belt or aggregate stockpile in accordance with ASTM D 75. One additional blended, aggregate only sample is batched and tested in accordance with ASTM standards C 117, C 136, C 566, and MTM 117, to verify gradation meets JMF tolerances.

6.6.3 Dry samples to a constant weight in oven 257 F 9 F (125 C 5 C) in accordance with ASTM C 566.

6.6.4 Preheat the ignition furnace to 1072 BF V 9 BF (578 BC V 5 BC). Record the furnace temperature set point prior to the initiation of the test.

6.6.5 Input a correction factor of zero in the ignition furnace controller and record on form 1912.

6.6.6 Weigh and record the weight of the sample baskets and catch pan (with cover and guard in place).

6.6.7 Distribute approximately equal portions of the calibration sample among the baskets, starting with the bottom basket in the catch pan. Use a spatula or trowel to level the sample, taking care to keep material away from the edges of the basket. Re-nest baskets in the catch pan as the sample is being distributed. Replace cover and guard on basket assembly.

6.6.8 Weigh and record the sample, baskets, catch pan and basket guards. Calculate and record the initial weight of the sample (total weight - the weight of the sample basket assembly).

6.6.9 Input the initial weight of the sample to the nearest gram into the ignition furnace controller. Verify that the correct weight has been entered.

6.6.10 Open the chamber door, then, using the sample transfer device, place the baskets with the sample into the furnace. Close the chamber door and verify that the sample weight (including the baskets) displayed on the furnace's scale equals the total weight recorded in Section 6.6.8, within V 5 grams. Differences greater than 5 grams or failure of the furnace balance to stabilize may indicate that the sample baskets are contacting the furnace wall and will invalidate the test. Initiate the test by pressing the start/stop button. This will lock the sample chamber and start the combustion blower.

6.6.11 Allow the sample to remain in the furnace for forty-five (45) minutes. The stable light and audible stable indicator may come on after 15 to 30 minutes; do not stop the test at this time. Press the start/stop button when the furnace timer indicates 45:00. This will unlock the sample chamber and cause the printer to print out the test results. If the mass loss exceeds 0.5 percent, lower the test temperature to 972 BF V 9 BF (522 BC V 5 BC) and repeat the test. If the mass loss continues to exceed 0.5 percent, lower the test temperature to 873 BF V 9 BF (467 BC V 5 BC) and repeat the test. If mass loss continues to exceed 0.5 percent or if the sample fails to stabilize in 45 minutes, Method I (6.5) must be used.

6.6.12 Open the chamber door, then using the sample transfer device, remove the baskets with the sample. Place hot sample and basket assembly on a heat proof surface and place the protective cage over it. Allow to cool to room temperature (approximately 30 minutes) before emptying baskets.

6.6.13 Record the weight of the sample after ignition to the nearest 0.1 gram and calculate the calibration factor of C_F using the formula in Section 6.5.16.

6.6.14 Repeat these steps for the two additional calibration samples. Calculate the average calibration factor by averaging the three C_F values.

7. Asphalt Content Test Procedure

NOTE: The increase in temperature when burning an asphalt mixture is approximately 104 BF (40 BC). Therefore, the temperature for calibration is 104 BF (40 BC) greater when burning a calibration aggregate than when burning a mix.

7.1 Preheat the ignition furnace to 1000 BF V 9 BF (538 BC V 5 BC), or to an approved test temperature. If method II was used for calibration use a temperature 104 BF (40 BC) less than that used for calibration.

7.2 Input the correction factor for the specific mix to be tested as determined in Section 6, into the ignition furnace controller, and record on form 1912.

7.3 Weigh and record the weight of the sample baskets and catch pan (with guards in place).

7.4 If the mixture is not sufficiently soft to separate with a spatula or trowel, place it in a large flat pan and warm to 257 BF V 9 BF (125 BC V 5 BC) for twenty-five (25) minutes. Distribute approximately equal portions of the sample among the baskets, starting with the bottom basket in the catch pan. Use a spatula or trowel to level the sample, taking care to keep material away from the edges of the basket. Re-nest baskets in the catch pan as the sample is being distributed. Replace cover and guard on basket assembly.

7.5 Weigh and record the sample, baskets, catch pan and basket guards. Calculate and record the initial weight of the sample (total weight - the weight of the sample basket assembly).

7.6 Input the initial weight of the sample to the nearest gram into the ignition furnace controller. Verify that the correct weight has been entered.

7.7 Open the chamber door, then using the sample transfer device, place the baskets with the sample into the furnace. Close the chamber door and verify that the sample weight (including the baskets) displayed on the furnace's scale equals the total weight recorded in Section 7.4, within V 5 grams. Differences greater than 5 grams or failure of the furnace balance to stabilize may indicate that the sample baskets are contacting the furnace wall and will invalidate the test. Initiate the test by pressing the start/stop button. This will lock the sample chamber and start the combustion blower.

7.8 Allow the test to continue until the stable light and audible stable indicator signify that the test is complete. Press the start/stop button. This will unlock the sample chamber and cause the printer to print out the test results.

7.9 Open the chamber door, then using the sample transfer device, remove the baskets with the sample. Place hot sample and basket assembly on a heatproof surface and place the protective cage over it. Allow to cool to room temperature (approximately 30 minutes).

8. Gradation

8.1 Allow the sample to cool to room temperature in the sample baskets.

8.2 Empty the contents of the baskets into a pan or bowl. Use a small wire sieve brush to ensure that all fines are removed from the baskets.

8.3 Perform the gradation analysis according to ASTM C 566, ASTM C 117, ASTM C 136 and MTM 117.

9. Report

9.1 Attach a copy of original printed ticket and form (1912) to the daily report (1903).

MICHIGAN TEST METHOD
FOR
DETERMINING SPECIFIC GRAVITY AND
ABSORPTION OF COARSE AGGREGATES

1. Scope

1.1 This test method covers the determination of specific gravity and absorption of coarse aggregate. The specific gravity may be expressed as bulk specific gravity, bulk specific gravity (SSD) (saturated-surface-dry) or apparent specific gravity. The bulk specific gravity (SSD) and absorption are based on aggregate after 24 hour soaking in water.

2. Referenced Documents

2.1 ASTM Standards:
C 128 Test Method for Specific Gravity and Absorption of Fine Aggregate
C 136 Test Method for Sieve Analysis of Fine and Coarse Aggregate
C 702 Practice for Reducing Field Samples of Aggregate to the Testing Size
E 11 Specification for Wire-Cloth Sieves for Testing Purposes
E 12 Terminology Relating to Density and Specific Gravity of Solids, Liquids, and Gases

2.2 AASHTO Standards:
T 85 Specific Gravity and Absorption of Coarse Aggregates

2.3 MDOT Standards:
MTM 107 Sampling Aggregates

3. Significance and Use

3.1 Bulk specific gravity is the characteristic generally used for calculation of the volume occupied by the aggregate in HMA mixtures that are proportioned or analyzed on an absolute volume basis.

4. Terminology

4.1 Definitions

4.1.1 *Absorption* - the increase in the weight of aggregate due to water in the pores of the material, but not including water adhering to the outside surface of the particles, expressed as a percentage of the dry weight. The aggregate is considered “dry“ when it has been maintained at a temperature of 230 °F ± 9°F (110 °C ± 5°C) for sufficient time to remove all the uncombined water.

4.1.2 *Specific gravity* - the ratio of the mass (or weight in air) of a unit volume of a material to the mass of the same volume of water at stated temperatures. Values are dimensionless.

4.1.2.1 *Apparent specific gravity* - the ratio of the weight in air of a unit volume of the impermeable portion of aggregate at stated temperature to the weight in air of an equal volume of water at a stated temperature.

4.1.2.2 *Bulk specific gravity (dry)* - the ratio of the weight in air of a unit volume of aggregate (including the permeable and impermeable voids in the particles but not including the voids between particles) at a stated temperature to the weight in air of an equal volume of water at a stated temperature.

4.1.2.3 *Bulk specific gravity (SSD)* - the ratio of the weight in air of a unit volume of aggregate, including the weight of water within the voids filled to the extent achieved by submerging in water for approximately 24 hours (but not including the voids between particles) at a stated temperature, compared to the weight in air of an equal volume of water at a stated temperature.

NOTE: The terminology for specific gravity is based on terms in Terminology E 12.

5. Summary of Test Method

5.1 A sample of oven washed, dry aggregate is immersed in water for approximately 24 hours to essentially fill the pores. It is then removed from the water, the water dried from the surface of the particles and the sample weighed. Subsequently the sample is weighed while submerged in water. Finally, the sample is oven-dried and weighed a third time. Using the weights thus obtained, and formulas in this test method, it is possible to calculate three types of specific gravity and absorption.

6. Apparatus

6.1 Balance - A weighing device that is sensitive, readable and accurate to 0.1 g. The balance shall be equipped with suitable apparatus for suspending the sample container in water.

6.2 Sample container - A bucket or container capable of being suspended and of a size appropriate for the sample. The container shall be constructed in a manner, which will prevent trapping air or loss of aggregate when the container is submerged.

6.3 Water Tank - A watertight tank into which the sample container may be placed while suspended below the balance.

6.4 Sieves - A No. 4 (4.75-mm) sieve or other size as needed (see 7.2), conforming to Specification E 11.

7. Sampling

7.1 Sample the aggregate in accordance with MTM 107.

7.2 The weight of the test sample shall be a minimum of 2000 grams but no more than 3000 grams.

8. Procedure

8.1 Thoroughly mix the sample of aggregate and reduce it to the approximate quantity needed, using the applicable procedures in Method C 702. Remove all material passing a No. 4 (4.75 mm) sieve by dry sieving. If the sample contains 25% or more of material passing the No. 4 (4.75 mm) sieve, but retained on the No. 8 (2.36 mm) sieve, the material retained on the No. 8 (2.36 mm) sieve shall be tested separately as a coarse aggregate. In calculating the percentage of material in each size fraction, ignore the quantity of material finer than No. 4 (4.75 mm) sieve if the sample contains less than 25% retained on the No.8 (2.36 mm) sieve.

8.2 Dry the test sample to a constant weight at a temperature of 230 °F ± 9 °F (110 °C ± 5°C) and cool in air at room temperature until the aggregate has cooled to a temperature that is comfortable to handle.

8.3 Wash material (retained on the No. 4 [4.75 mm] sieve and/or on the No. 8 [2.36 mm] sieve) to remove dust or other coatings from the surface. Subsequently immerse the aggregate in water at room temperature for a period of 24 ± 4 hours.

8.4 Remove the sample from the water and roll it in a large absorbent cloth until all visible films of water are removed. Take care to avoid evaporation of water from aggregate pores during the operation of surface drying. Immediately weigh the test sample in the saturated surface dry condition. Record this weight as the “weight of the saturated surface dry test sample”. This weight and all subsequent weights shall be recorded to the nearest 0.1 g.

8.5 After weighing, immediately place the saturated-surface-dry test sample in the sample container and determine its weight in water at 77°F ± 3°F (25°C ± 1.7°C). Take care to remove all entrapped air before weighing by agitating the sample. Record this weight as the “weight of saturated test sample in water”.

NOTE 2: The container should be immersed to a depth sufficient to cover it and the test sample during weighing. Wire suspending the container should be of the smallest practical size to minimize any possible effects of a variable immersed length.

8.6 Remove the aggregate from the sample container and place into an ovenproof pan, taking care not to lose any material. Dry in an oven at a temperature of 230 °F ± 9 °F (110°C ± 5°C) to a constant weight. Cool the sample until the aggregate has reached a temperature that is comfortable to handle. Weigh the sample and record the weight as "weight of oven-dry test sample in air”.

9. <u>Calculation</u>

9.1 Specific Gravity:

9.1.1 Bulk Specific Gravity (Dry) - Calculate the bulk specific gravity 77°F (25°C), as follows:

Bulk specific gravity (dry) = J / (C-F)

Where:

J = weight of oven-dry test sample in air, g.
C = weight of saturated-surface dry test sample, g.
and
F = Weight of saturated test sample in water, g.

9.1.2 Bulk Specific Gravity (Saturated Surface-Dry) - Calculate the bulk specific gravity, 77°F (25°C), on the basis of weight of saturated-surface-dry aggregate as follows:

Bulk sp gr (saturated-surface-dry) = C / (C-F)

9.1.3 Apparent Specific Gravity - Calculate the apparent specific gravity 77°F (25°C), as follows:

Apparent sp gr = J / (J-F)

9.2 Average Specific Gravity Values -- When the sample is tested in separate size fractions, the average value for bulk specific gravity (dry), bulk specific gravity (SSD), or apparent specific gravity can be computed in accordance with 9.1 using the following equation:

$$G = \frac{1}{\frac{P_1}{100\,G_1} + \frac{P_2}{100\,G_2} + \frac{P_n}{100\,G_n} + \ldots}$$

Where:

G = average specific gravity. All forms of expression of specific gravity can be averaged in this manner.
G_1, G_2, ... G_n = appropriate specific gravity values for each size fraction depending on the type of specific gravity being averaged.

P_1, P_2, ...P_n = weight percentages of each size fraction present in the original sample.

9.3 Absorption - Calculate the percentage of absorption as

follows: Absorption, % = [(C-J) / J] x 100

9.4 Average Absorption Value - When the sample is tested in separate size fractions, the average absorption value is the average of the values as computed in 9.3, weighted in proportion to the weight percentages of the size fractions in the original sample as follows:

$$A = (P_1A_1 / 100) + (P_2A_2 / 100) + ...(P_nA_n / 100)$$

Where:

A = average absorption, %
A_1, A_2, ... A_n = absorption percentages for each size fraction, and
P_1, P_2, ...P_n = weight percentages of each size fraction present in the original sample.

10. Report

10.1 Report specific gravity results to the nearest 0.001 and indicate the type of specific gravity, whether bulk (dry), bulk (saturated-surface-dry) or apparent.

10.2 Report the absorption results to the nearest 0.1%.

11. Precision and Bias

11.1 The criteria for judging the acceptability of the specific gravity test results obtained by this method are given in the following table:

Table 1 Precision

	Standard Deviation	Acceptable Range of Two Results
Single-Operator Precision:		
Bulk specific gravity (dry)	0.009	0.025
Bulk specific gravity (SSD)	0.007	0.020
Apparent Specific gravity	0.007	0.020
Absorption, %	0.088	0.25
Multi-laboratory Precision:		
Bulk specific gravity (dry)	0.013	0.038
Bulk specific gravity (SSD)	0.011	0.032
Apparent Specific gravity	0.011	0.032
Absorption, %	0.145	0.41

MICHIGAN TEST METHOD
FOR
DETERMINING SPECIFIC GRAVITY AND ABSORPTION OF FINE AGGREGATES

1. Scope

This test method covers the determination of specific gravity and absorption of fine aggregate. The specific gravity may be expressed as bulk specific gravity, bulk specific gravity (SSD) (saturated-surface-dry) or apparent specific gravity. Bulk specific gravity (SSD) and absorption are based on aggregate after soaking in water for 24 hours.

2. Referenced Documents

2.1 ASTM Standards
C 70 Test Method for Surface Moisture in Fine Aggregate
C 127 Test Method for Specific Gravity and Absorption of Coarse Aggregate
C 136 Test Method for Sieve Analysis of Fine and Coarse Aggregate
C 702 Practice for Reducing Field Samples of Aggregate to the Testing Size
E 11 Specification for Wire-Cloth Sieves for Testing Purposes
E 12 Terminology Relating to Density and Specific Gravity of Solids, Liquids, and Gases
E 29 Practice for Using Significant Digits in Test Data to Determine Conformance with Specifications

2.2 AASHTO Standards
T 84 Specific Gravity and Absorption of Fine Aggregates

2.3 MDOT Standards
MTM 107 Method for Sampling Aggregates

3. Significance and Use

3.1 Bulk specific gravity is the characteristic generally used for calculation of the volume occupied by the aggregate in HMA mixtures which are proportioned or analyzed on an absolute volume basis.

4. Terminology

4.1 Definitions

4.1.1 *Absorption* - the increase in the weight of aggregate due to water in the pores of the material, but not including water adhering to the outside surface of the particles, expressed as a percentage of the dry weight. The aggregate is considered "dry" when it has been maintained at a temperature of 200 °F ± 5 °F (93°C ± 3 °C) for sufficient time to remove all the uncombined water.

4.1.2 *Specific gravity* - the ratio of the mass (or weight in air) of a unit volume of a material to the mass of the same volume of water at stated temperatures. The terminology for specific gravity is based on ASTM E 12. Values are dimensionless.

4.1.2.1 *Apparent specific gravity* - the ratio of the weight in air of a unit volume of the impermeable portion of aggregate at stated temperature to the weight in air of an equal volume of water at a stated temperature.

4.1.2.2 *Bulk specific gravity (dry)* - the ratio of the weight in air of a unit volume of aggregate (including the permeable and impermeable voids in the particles but not including the voids between particles) at a stated temperature to the weight in air of an equal volume of water at a stated temperature.

4.1.2.3 *Bulk specific gravity (SSD)* - the ratio of the weight in air of a unit volume of aggregate, including the weight of water within the voids filled to the extent achieved by submerging in water for approximately 24 hours (but not including the voids between particles) at a stated temperature, compared to the weight in air of an equal volume of water at a stated temperature.

4.1.3 *Fine Aggregate* - For the purposes of this procedure, fine aggregate is defined as the aggregate passing the No. 8 (2.36 mm) sieve.

5. Summary of Test Method

5.1 A sample of washed, oven dry fine aggregate is immersed in water for approximately 24 hours to saturate the material. The water is then removed and the sample is exposed to a current of air and is stirred to remove the water from the surface of the particles. Two portions of the sample are placed in volumetric flasks and weighed. The flasks are filled with water, air bubbles are removed, and the samples are weighed again. Finally the samples are placed in pans, oven-dried, and weighed a third time. Using the weights thus obtained, and formulas in this test method, it is possible to calculate three types of specific gravity and absorption.

6. Apparatus

6.1 Balance - A weighing device having a capacity of 2 kg or more, sensitive to 0.1 g or less.

6.2 Two Pycnometers - Each being a volumetric flask of 500ml capacity.

6.3 Mold - A metal mold in the form of a frustum of a cone with the dimensions as follows: 1.57 inches ± 0.12 inches (40 mm ± 3 mm) inside diameter at the top, 3.54 inches ± 0.12 inches (90 mm ± 3 mm) inside diameter at the bottom, and

2.95 inches ± 0.12 inches (75 mm ± 3 mm) in height, with the metal having a minimum thickness of 0.03 inches (0.8 mm).

6.4 Tamper - A metal tamper weighing 340 g ± 15 g and having a flat circular tamping face 1 inch (25 mm) ± 0.12 inches (3 mm) in diameter.

7. Sampling

7.1 Obtain approximately 1200 g of fine aggregate from the sample using the applicable procedures described in Practice C 702.

8. Procedure

8.1 Dry the sample in a suitable pan or vessel to constant weight at a temperature of 230 °F ± 5 °F (110 °C ± 3 °C).

8.2 Allow the sample to cool to room temperature, then wash sample over a No. 200 (75 ,um) sieve until water runs clear. Place material retained on the No. 200 (75 ,um) sieve in a container and immerse in water at room temperature for a period of 24 ± 4 hours.

8.3 Remove excess water from the washed sample being careful to avoid loss of material. Spread the sample on a flat non-absorbent surface exposed to a gently moving current of 60 to 85 °F (15 to 29 °C) air and stir frequently to secure homogeneous drying. When the test sample approaches a free flowing condition, follow the procedure in 8.3.1 to determine whether or not surface moisture is present on the fine aggregate particles. It is intended the first trial of the cone test will be made with some surface water in the sample. Continue drying with constant stirring and test at frequent intervals until the test indicates the sample has reached a surface-dry condition. **If the first trial of the surface moisture test indicates moisture is not present on the surface, it has dried past saturated-surface dry condition. This will invalidate the test and the material must be re-tested.**

8.3.1 Cone Test for Surface Moisture - **Hold the mold down firmly** on a smooth non-absorbent surface with the large diameter down. Place a portion of the partially dried fine aggregate loosely in the mold by filling it to overflowing. Remove loose material from around the outside of the base of the mold. Tamp the fine aggregate into the mold with 25 drops of the tamper. Each drop should start about 0.25 inches (5 mm) above the surface of the aggregate. Permit the tamper to fall freely on each drop. Adjust the starting height to the new surface elevation after each drop and distribute the drops over the surface. Lift the mold vertically. If surface moisture is still present, the fine aggregate will retain its shape. When the fine aggregate slumps slightly it indicates that it has reached a surface-dry condition.

8.4 Immediately introduce approximately 250 g of saturated surface-dry fine aggregate into each of two calibrated pycnometers. Weigh each pycnometer and

record each weight as "weight of saturated-surface dry test sample". Record this and all subsequent weights to the nearest 0.1 g. Follow the rounding method described in ASTM E 29.

8.5 Fill each pycnometer with water to approximately 90% of capacity. Roll, invert, and agitate each pycnometer to eliminate all air bubbles (Note 1). Adjust the temperature of each pycnometer to 77 °F ± 3 °F (25 °C ± 1.7 °C) by immersion in circulating water and allow samples to settle for a minimum of five (5) minutes. Then remove the pycnometers from the circulating water and bring the water level in each of the pycnometers to the calibrated capacity. (Note 2) Determine the total weight of each of the pycnometers containing the sample and **water. Record these weights as "weight of flask filled with sample and water to calibration mark."**

NOTE 1: It normally takes about 3 to 7 minutes to eliminate air bubbles.

NOTE 2: Dipping the tip of a paper towel into the pycnometer has been found to be useful in dispersing the foam that sometimes builds up when eliminating the air bubbles.

8.6 Remove the fine aggregate from each of the two pycnometers and place each sample into a separate ovenproof container. Be certain to remove all the material from the pycnometers, taking care not to lose any. Dry the material in an oven at a temperature of 200 °F ± 5 °F (93 °C ± 3 °C) to a constant weight. Cool the samples until the aggregate has reached a temperature that is comfortable to handle. Weigh the sample**s and record as "weight of oven-dry test sample in air". Complete the** calculations according to Section 9 for each of the two samples (indicated by the subscript i in the formulae below).

9. <u>Calculations</u>

9.1 Specific Gravity:

9.1.1 Bulk Specific Gravity (Dry) - Calculate the bulk specific gravity 77 °F (25 °C), as follows:

$$\textit{Bulk specific gravity (dry)} = J_i / (E_i + C_i - F_i)$$

Where:

J = weight of oven-dry test sample in air, g.
E = weight of flask filled with water to calibration mark
C = weight of saturated-surface dry test sample in air, g.
F = Weight of flask with sample and water to calibration mark, g.

9.1.2 Bulk Specific Gravity (SSD) - Calculate the bulk specific gravity, 77 °F (25 °C), on the basis of weight of saturated-surface-dry aggregate as follows:

$$\textit{Bulk specific gravity (SSD)} = C_i/(E_i + C_i - F_i)$$

9.1.3 Apparent Specific Gravity - Calculate the apparent specific gravity 77 °F (25 °C), as follows:

$$\textit{Apparent specific gravity} = J_i / (E_i + J_i - F_i)$$

9.2 Absorption - Calculate the absorption as a percent of the dry weight as follows:

$$\textit{Absorption} = [(C_i - J_i) / J_i] \times 100$$

9.3 Compare the two sets of results obtained to the precision limits in Section 11. If the Single Operator Precision Acceptable Range of Two Results are exceeded on any parameter, the test is invalid and a retest must be performed.

9.4 If the results are valid, average the two results for specific gravity and for absorption. These are the results of this test method.

10. Report

10.1 Report specific gravity results to the nearest 0.001 and indicate the type of specific gravity, whether bulk (dry), bulk (saturated-surface-dry) or apparent.

10.2 Report the absorption results to the nearest 0.1%.

11. Precision

11.1 The criteria for judging the acceptability of the specific gravity test results obtained by this method are given in the following table:

Table 1: Precision Limits for Specific Gravity and Absorption

	Standard Deviation	Acceptable Range of Two Results
Single-Operator Precision:		
Bulk specific gravity (dry)	0.011	0.032
Bulk specific gravity (SSD)	0.0095	0.027
Apparent Specific gravity	0.0095	0.027
Absorption, %	0.11	0.31
Multilaboratory Precision:		
Bulk specific gravity (dry)	0.023	0.066
Bulk specific gravity (SSD)	0.020	0.056
Apparent Specific gravity	0.020	0.056
Absorption, %	0.23	0.66

MICHIGAN TEST METHOD
FOR
HMA MIX DESIGN PROCEDURE

1. Scope

1.1 This method is used to determine that the aggregates and HMA mixtures meet gradation and physical requirements stated in Standard Specifications, Supplemental Specifications or Special Provisions. This method is used to determine the optimum asphalt content for virgin and recycled HMA mixtures.

2. Referenced Documents

ASTM C 702	Reducing Samples of Aggregate to Testing Size
ASTM C 136	Standard Method for Sieve Analysis of Fine and Coarse Aggregates
ASTM C 117	Standard Test Method for Materials Finer Than No. 200 (75 m) Sieve in Mineral Aggregates by Washing
MTM 118-97	Test Method for Measuring Fine Aggregate Angularity
MTM 117-97	Test Method for Determining Percentage of Crushed Particles in Aggregates
MTM 112-97	Test Method for Determining an Aggregate Wear Index (AWI) from Sample Petrographic Composition and Wear Track AWI Factors
ASTM C 535	Standard Test Method for Resistance to Degradation of Large-Size Coarse Aggregate by Abrasion and Impact in the Los Angeles Machine
ASTM D 5	Standard Test Method for Penetration of HMA Materials
ASTM D 1559	Standard Test Method for Resistance to Plastic Flow of HMA Mixtures Using Marshall Apparatus
ASTM D 2726	Standard Test Method for Bulk Specific Gravity and Density of Compacted HMA Mixtures Using Saturated Surface-Dry Specimens
ASTM D 2041	Standard Test Method for Theoretical Maximum Specific Gravity And Density of HMA Paving Mixtures
ASTM D 2172	Standard Test Method for Quantitative Extraction of Bitumen from HMA Paving Mixtures Asphalt Institute Manual MS-2

3. Definitions

3.1 Definitions are in accordance with the Asphalt Institute Manual MS-2, except absorbed asphalt is included as part of the voids in mineral aggregate.

4. Apparatus

4.1 Sample Splitter - shall be comparable to a Gilson SP-1 sample splitter with adjustable bars. Shall be able to reduce a 60-pound (27.2 kg) aggregate sample to appropriate sample size.

4.2 Mechanical Sieve Shaker - shall be comparable to a Gilson PS-3 or PS-4 Porta-Screen. The unit shall be capable of running for 15 minutes.

4.3 Electronic Scale - shall be comparable to a Mettler PM-16 scale. Minimum 16,000-gram capacity, sensitive to 0.1 gram. Equipped with suitable suspension apparatus and holder to permit weighing specimens while suspended from center of scale pan.

4.4 Oven - shall be comparable to BLUE M DC-246F batch oven. Equipped with a 24-hour timer. Additional ovens comparable to VWR 1350F constant temperature oven. Both ovens capable of holding a constant test temperature. The ovens shall be used for heating aggregates, HMA materials, specimen molds, compaction molds and other equipment to the required mixing and molding temperatures.

4.5 Water Bath - shall be comparable to BLUE M Model MW 1140A-1, Magni Whirl Constant Temperature Bath. The water bath shall be at least 6 inches (15.24 cm) deep and shall be thermostatically controlled to maintain the bath at either 77 F (25 C) or 140 F (60 C). The tank shall have a shelf for supporting specimens 2 inches (5.08 cm) above the bottom of the bath.

4.6 Mixing Apparatus - shall be comparable to a Hobart mixer with appropriate bowl and mixing apparatus to provide efficient and thorough mixing of a 6000-gram sample.

4.7 Mechanical Compactor - shall be comparable to Rainhart Series 110 Automatic Compactor with a non-rotating base and a flat, circular tamping face and a 10-pound (4.536 kg) sliding weight with a free fall of 18 inches (45.72 cm). The compactor shall be equipped with compaction pedestal and specimen mold holder that meet specifications of ASTM D 1559. To be used in compacting all Marshall specimens. This compactor shall be equipped with an adjustable electronic counter/shut off switch comparable to Pine Instrument Company Model ACCCR. The mechanical compactor shall be calibrated to give results comparable to the hand-operated hammer.

4.8 Specimen Extractor - may be a mechanically or manually operated jack.

4.9 Marshall Testing Equipment - shall be comparable to Rainhart Automatic Tester and Recorder. The recorder may be either a chart recording or digital recording with direct hookup to a computer.

4.10 Manometer - capable of measuring a residual pressure of 30 mm Hg or less.

4.11 Humboldt Universal Penetrometer

4.12 Extractor - shall be comparable to a Soiltest air-driven extractor using a continuous flow centrifuge.

5. <u>Identification of Submitted Aggregate Samples and Paperwork</u>

5.1 Each submittal must include a completed MDOT Form 1820 - Contractor=s HMA Mix Design Communication.

5.2 Each aggregate sample must be submitted in oven-proof containers, preferably canvas bags.

5.3 Each bag of aggregate must have a correctly <u>completed</u> MDOT Form 1923.

5.4 MDOT assigns a mix design number to each aggregate sample and corresponding

paperwork.

5.5 Work sheets for the individual aggregate tests are completed.

6. Aggregate Test Specimens

6.1 Preparation of Aggregates - oven dry entire sample (1) using the BLUE M DC-246F batch oven prior to mechanical processing to remove all moisture. A sample splitter comparable to Gilson SP-1 shall be used to reduce the aggregate down to a workable size according to the procedures in ASTM C 702. The proper sample sizes are:

Coarse aggregate	-	2500 grams maximum
Dense graded	-	2000 grams maximum
Fine aggregate	-	1300 grams maximum
Crusher dust	-	800 grams maximum

6.2 Mechanical processing - according to the procedures in ASTM C 136 a mechanical shaker comparable to Gilson PS-3 or PS-4 shall be used to separate each aggregate into the following size fractions:

P 1½ inch (37.5 mm)	R 1 inch (25.0 mm)
P 1 inch (25.0 mm)	R 3/4 inch (19.0 mm)
P 3/4 inch (19.0 mm)	R ½ inch (12.5 mm)
P ½ inch (12.5 mm)	R 3/8 inch (9.50 mm)
P 3/8 inch (9.50 mm)	R No. 4 (4.75 mm)
P No. 4 (4.75 mm)	R No. 8 (2.36 mm)
P No. 8 (2.36 mm)	R No. 16 (1.18 mm)
P No. 16 (1.18 mm)	R No. 30 (0.60 mm)
P No. 30 (0.60 mm)	R No. 50 (0.30 mm)
P No. 50 (0.30 mm)	R No. 100 (0.15 mm)
P No. 100 (0.15 mm)	R No. 200 (0.075 mm)
P No. 200 (0.075 mm)	R PAN

Shaking time is 15 minutes. Two samples of each aggregate are tested. The samples are recorded as wash #1 and wash #2 respectively. Each sample is identified with:

Mix design number
Aggregate type
Sieve size
Wash #1 or #2

Weigh the material accurately to 0.1 grams on electronic scales. Record this weight in the BEFORE WASH column for the respective sieve on MDOT Aggregate Wash Record (Form 1899). Proceed until all sieve sizes are weighed. The second sample is recorded under WASH #2 columns.

6.3 Washed Sieve Analysis - each sample will be washed according to the procedures in ASTM C 117. With one exception, MDOT washes each sieve individually. A wetting agent is not used. Once the material has been washed and dried, accurately weigh the

aggregate to 0.1 grams and record as the AFTER WASH weight for each sieve size respectively. Enter the wash #1 and wash #2 weights into MDOT=s computer program, which will calculate the amount of P 200 (0.075 mm) material that is retained on each aggregate sieve size. This program also calculates the total amount of material needed for the mixture by sieve size. Both washes are averaged and correct batch weights for each sieve size are proportioned back to a 5500 gram mix sample.

6.4 Aggregate Tests - using the combined aggregates from the wash #1 and wash #2, the following tests shall be performed to determine aggregate properties:

6.4.1 The Angularity Index (AI) tests shall be conducted according to the procedures in MTM 118-97. An AI test is run on individual aggregate samples if at least 7% is retained on the #30 (0.60 mm) sieve. However, all aggregates with material retained on the #30 (0.60 mm) sieve must be included in the blended sample. Minimum Angularity Index values must be met by the virgin material in mixtures that contain RAP. Record test results and calculations on MDOT Form 1828.

6.4.2 The Aggregate Wear Index (AWI) tests shall be conducted according to the procedures in MTM 112-97. The AWI petrographic pick is performed by the Aggregate Quality Control Unit. If a nomograph exists for an aggregate source, the AWI from the nomograph will be used for the design. An AWI value of 240 will be assigned to all RAP unless documented evidence is presented by the Contractor of a different value. Record test results on MDOT Form 1820.

6.4.3 The percent of crushed particles of the aggregate shall be conducted according to the procedures in MTM 117-97. Record test results on MDOT Form 1820.

6.4.4 A current Los Angeles abrasion test is required before the HMA mix design is received in the laboratory. Requirements for L.A. Abrasion are as follows:

L.A. < 35 minimum one every 5 years *
L.A. > 35 minimum one per year
* provided there are three L.A.s at 35 or under on record.

7. <u>Preparation of Aggregate Mixture</u>

7.1 Aggregate Preparation - using the same Gilson shakers, sample weights and procedures used in the washes, shake down enough of each aggregate to prepare a minimum of 4 - 5500 gram mixture samples. This sample size will result in a sufficient quantity of mix to produce three Marshall specimens and one TMD sample. Store each aggregate by sieve size in separate pans. ID each pan.

7.2 Mixing Temperature - heat the aggregate in the BLUE M batch oven for a minimum of 3 hours. The oven should be set at 290 F (143.3 C).

7.3 Batching Aggregates - from the aggregate washes and the resulting MDOT computer program, fill out a mixture blend sheet. This states the correct weights needed on each sieve size by aggregate type to batch the material to the combined gradation.

7.4 Blending Aggregates - one aggregate, one sieve at a time, remove the pans from the

oven and weigh out the required weight for each of the samples into a large bowl.

7.5 Final Check - once all the aggregates have been blended, dry mix thoroughly and weigh the sample to ensure the correct weight was achieved. Make adjustments if necessary.

7.6 RAP - when RAP is included in the mix design, split down a minimum of 4 samples to the weight required for the mix design, using the Gilson sample splitter. Put in pans and set aside.

NOTE: The RAP should be air-dried before this process is started.

8. Preparation of Mixtures

8.1 Preheating - the day before the mix design testing, pre-set BLUE M batch oven at 290 EF (143.3 EC) to come on a minimum of 3 hours before mixing time. MDOT mixes and compacts its HMA mixtures at 290 EF (143.3 EC). If a polymer modified asphalt is used in the mix design, the oven temperature will be set per the polymer manufacturer=s recommendations for mixing and compaction temperature. The following materials and equipment are placed in the oven at this time:

8.1.1 The blended aggregate mixtures - a thermometer is placed in the aggregate to assure the mixing temperature is achieved.

8.1.2 A 1-gallon (3.8 liter) can of the specified asphalt grade - the lid is on the can, but not tightly closed. Any excess asphalt left over from the design is discarded.

8.1.3 Mixing equipment - which includes the mixing bowl, mixing paddles, trowels, spoons, etc.

8.1.4 RAP (if included in the mix design) - is placed in the oven 1 hour before mixing.

8.2 At the start of the workday the compactor and the hot plate for the Marshall hammer are turned on.

8.3 Marshall Volume - the MS-2 Manual (Sixth Edition, Mix Design Methods for Asphalt Concrete) from the Asphalt Institute recommends the correct size of a compacted 4-inch (10.16 cm) Marshall is 2.5 inches V 0.049 inches (63.5 mm V 1.27 mm) in height. This is equivalent to a volume of 515 cm^3 V 8 cm^3. MDOT makes a trial mix at 1230 grams aggregate plus predicted optimum asphalt content. The Marshall specimen is weighed out at 1230 grams, compacted, cooled, extruded and the volume measured. If the volume is not 515 cm^3, a formula is used to determine the correct weight needed for the Marshalls to achieve this volume.

$$\text{Adjusted weight of mix} = \frac{515 * \text{weight of mix used}}{\text{Measured Volume}}$$

8.4 Mixing - test a minimum of 4 points at asphalt contents in increments of 0.5 %, with at least one full point above or below optimum asphalt content.

8.4.1 The mixing bowl is removed from the oven and tared on the electronic scale. The first batch of aggregate is removed from the oven and poured into the mixing bowl. The aggregate weight is checked to ensure 5500 grams. The scale is tared again. A pocket is created in the middle of the aggregate and the correct amount of asphalt is poured in.

8.4.2 The mixing bowl is attached to the Hobart mixer. The mixing paddle is removed from the oven and attached. The aggregate and asphalt is mixed for 12 minutes.

8.4.3 The mixture is placed in stainless steel bowls. Excess material on both the mixing bowl and paddle are scraped into the bowl. The bowls are covered and placed back into the oven for a 2-hour oven- cure time. The mixing bowl and paddle are placed back into the oven in preparation for the next test point.

8.4.4 Repeat this process for the remaining points.

NOTE: Keep track of the times when each point is put into the oven to ensure proper cure-time.

8.4.5 After the 2-hour oven cure-time, the mixture is removed from the oven and dumped onto a heated quartering table. The mixture is worked with a heated trowel to help ensure that segregation does not exist. The mix is quartered into 3 Marshall samples and one TMD sample. The TMD sample is placed on a large aluminum rectangular pan, spread out and allowed to cool. The 3 Marshall samples are checked for correct weight to produce a Marshall with a volume of 515 cm^3 8 cm^3. The Marshall tins are covered and placed back into the oven. A calibrated thermometer is placed in each tin.

9. Mixture Testing

9.1 Marshall Compaction - once the Marshall samples have reached compaction temperature, they are compacted per ASTM D 1559.

EXCEPTION: MDOT makes a 5500-gram batch for 3 Marshalls and one TMD sample instead of making one batch per Marshall. Also, MDOT mixes and compacts exclusively at 290 F (143.3 C).

9.1.1 The Marshall hammer shall have a flat, circular tamping face with a non-rotating base.

9.1.2 The Marshall molds are preheated in a VWR 1350 F constant-temperature oven.

9.1.3 The Marshalls are compacted at 290 F (143.3 C), 50 blows per side. If a polymer-modified asphalt is used in the mixture, compaction temperature is recommended by the supplier.

9.1.4 After compaction the Marshall is marked with an ID and placed on its side to cool. The Marshall is left overnight before being extruded.

9.1.5 Smooth the rough edges.

9.2 Marshall Bulk Specific Gravity - ASTM D 2726 procedures are followed.

9.2.1 Calculate the Bulk Specific Gravity to 3 decimal places.

9.2.2 All Marshall volume should be within the 515 cm^3 8 cm^3 tolerance limits.

9.2.3 The average G_{mb} from each individual asphalt content (3 Marshalls) should be within 0.012 spread. Any Marshalls outside this spread should be evaluated and re-done. If 4 Marshalls per point are run, and one falls outside this tolerance, it can be tossed out.

9.2.4 The Marshall weights and calculations are recorded on MDOT Form 1822, Marshall Mix Design Worksheet.

9.3 Marshall Stability and Flow - ASTM D 1559 procedures are followed.

9.3.1 MDOT uses a Rainhart Stability Machine to measure the stability and flow.

9.3.2 The Rainhart gauges are hooked up to a computer and the data is recorded electronically on a disk. Stability, flow and graphs are printed out on a laser printer. Data is also recorded on MDOT Form 1822.

9.3.3 The stability value for each Marshall is corrected when the specimen volume is other than 509 to 522. Table 1 from ASTM D 1559 lists the correlation ratios for other volumes.

9.4 Theoretical Maximum Specific Gravity (G_{mm}) - ASTM D 2041 procedures are

followed. 9.4.1 MDOT=s minimum sample size is 2000 grams.

9.4.2 One G_{mm} test per point.

9.4.3 The mix is spread out on a large aluminum tray and allowed to cool. The mixture is broken down by hand so the particles of the fine aggregate portion are not larger than 1/4 inches (6.35 mm).

9.4.4 MDOT uses an aluminum pycnometer, calibrated weekly. The dry weight is checked daily.

9.4.5 MDOT uses a Humboldt vibrating table to apply the 15-minute agitation.

9.4.6 After agitation the pycnometer is filled with water, attached to an electronic scale and is hung in a water bath at 77 F (25 C) for 15 minutes. The final weight is taken.

9.4.7 Calculate the theoretical maximum specific gravity to 3 decimal places. Calculate the aggregate effective specific gravity (GSE) to 3 decimal places. The maximum spread between all GSE tests should be 0.012. If one of the values is outside this tolerance, re-testing should be considered.

9.4.8 Record data on MDOT Form 1806.

10. Calculations

10.1 Bulk Specific Gravity of the Compacted Mix (G_{mb}) - calculate the G_{mb} to 3 decimal places as follows:

$$G_{mb} \frac{\text{weight in air}}{\text{SSD weight - weight in water}}$$

10.2 Theoretical Maximum Specific Gravity (G_{mm}) - calculate the G_{mm} to 3 decimal places for each asphalt content as follows:

$$G_{mm} \frac{\text{mixture weight in air}}{\text{mixture weight in air - mixture weight in water}}$$

10.3 Aggregate Effective Specific Gravity (GSE) - calculate the GSE to 3 decimal places for each asphalt content as follows:

$$GSE \frac{100 \quad P_b}{100 - P_b} \quad G_{mm} \; G_b$$

Average the GSE for all asphalt content. Record on MDOT Form 1806.

10.4 Computed Theoretical Maximum Specific Gravity (G_{mm}) - using the average GSE from the mix design, calculate the G_{mm} for each asphalt content as follows:

$$G_{mm} \frac{100}{\frac{100 \; P_b \; P_b}{GSE \; G_b}}$$

Record the computed G_{mm} on MDOT Form 1806.

10.5 Air Voids - calculate the air void content at each asphalt content to one decimal place as follows:

$$\text{Air Voids \%} \quad \frac{G_{mm} - G_{mb}}{G_{mm}} \; 100\%$$

10.6 Voids Filled With Asphalt (VFA) - calculate the VFA at each asphalt content to 2 decimal places as follows:

$$VFA \quad 100 \quad \frac{P_b}{(G_b \quad AV)} \quad \frac{G_{mb}}{(P_b \; G_{mb})}$$

10.7 Voids in Mineral Aggregates (VMA) - calculate the VMA at each asphalt content to one decimal place as follows:

$$VMA \; \% \quad 100 \quad \frac{AV}{100 \quad VFA}$$

Absorbed asphalt is included as part of the VMA.

10.8 Asphalt Blend Ratio (ABR) - calculate as part of the VMA.

$$ABR \quad \frac{\log_{At,} pen \quad \log_{As,} pen \; 100}{\log_{a,} A \; pen \quad \log_{s,} A \; pen}$$

10.9 Percent RAP Allowed in Mix (S,%) - calculate S,% as follows:

$$S, \% \quad \frac{ABR \quad A_{t,\%} \quad 100}{100 \quad A_{s,\%}}$$

11. <u>Report</u>

11.1 Data Entry - the following information is entered into MDOT=s Mix Design computer program.

11.1.1 Project information, control section number, project number, etc. Data from MDOT Form 1820.

11.1.2 Contractor=s aggregate gradations, aggregate sources, % of blends, crush counts, AWI values, AI values, etc. Data from MDOT Form 1820.

11.1.3 Marshall test values. Data from MDOT Form 1822.

11.1.4 TMD test values. Data from MDOT Form 1806.

11.1.5 RAP data from MDOT Form 1814.

11.1.6 Desired air voids.

11.2 Test Report - the test report is generated.

11.2.1 The data entry page is reviewed for correct data entry.

11.2.2 The test report page is reviewed for correct data entry.

11.2.3 Target air voids are per specification for the project.

11.2.4 If desired air voids are achieved with at least one full test point above or below optimum asphalt content, proceed. If not, another asphalt content needs to be run.

11.2.5 All specification items are checked. If they meet, proceed. If not, the design is stopped.

11.2.6 The test results for unit weight, stability, flow, air voids and VMA versus asphalt content are plotted on a graph.

11.3 Review.

11.3.1 The design is reviewed by the HMA Mix Design Supervising Technician.

11.3.2 If confident with the results, proceed. If not, more testing may be necessary.

11.3.3 Notify the Traveling Mix Inspector (TMI), Project Engineer, Consultant and Contractor as to status of the mix design.

11.3.4 The HMA Mix Design Engineer gives the final review and approval of the mix design.

11.3.5 The HMA Mix Design is reported out.

12. Submitted Mix Designs

12.1 Mix design submittal shall be made to:

Michigan Department of Transportation
Construction and Technology Laboratory
HMA Mix Design Unit
8885 Ricks Road
P.O. Box 30049
Lansing, MI 48909

The hours for the laboratory are Monday through Friday from 5:30 am until 3:30 p.m.

12.1.1 MDOT will only accept one passing design per course, per project. The maximum number of designs per course, per project, any one Contractor/consultant may submit is two.

12.1.2 Upon acceptance of a submitted mix design (SMD) MDOT will have 7 calendar days to evaluate. SMDs received after 11:45 am will start the 7-day clock on the next scheduled workday.

12.2 Material Submittal - upon initial submittal of a mix design a representative of the HMA Services Unit must review the design for completeness of documentation and materials.

12.2.1 3 - 5000 gram samples of mixture at point closest to/at optimum asphalt content.

12.2.2 1 - 6700 gram sample of mixture at optimum asphalt

content. 12.2.3 2 - 1400 gram samples of blended aggregate.

NOTE: If Recycled Asphalt Pavement (RAP) is used in the mix design, these aggregate samples are not required.

12.2.4 800 grams sample passing No. 8 (2.36 mm) sieve and retained No. 30 (0.60 mm) sieve for the final Angularity Index blend. All material must be washed and dried.

12.2.5 Individual Aggregate Wear Index (AWI) samples. For each aggregate requiring an AWI value.

12.3 Documentation

12.3.1 MDOT Form 1820 - Contractor=s HMA Mix Design Communication

12.3.2 MDOT Form 1923 - Sample Identification (include with each submitted sample)

12.3.3 MDOT Form 1813 - Submitted Mix Design Summary Sheet

12.3.4 MDOT Form 1806 - Theoretical Maximum Specific Gravity of HMA Paving Mixtures

12.3.5 MDOT Form 1822 - Marshall Mix Design Worksheet

12.3.6 MDOT Form 1814 - Contractor Submitted Mix Design Worksheet for Recycled Mixtures

12.3.7 Documentation of RAP stockpile testing. One complete mixture analysis every 1000 tons of RAP (minimum of 3). One penetration test on the recovered asphalt cement every 3000 tons of RAP (minimum of 2).

12.3.8 Mix design regression analysis

12.3.9 Letter from the Contractor authorizing the consultant as the Contractor=s agent on mix design issues for the project.

12.3.10 MSDS for polymer modified asphalt, if used in the

mixture. 12.4 MDOT Review

12.4.1 Any sample submissions that are deficient in amount or lacking proper and complete identification will be rejected.

12.4.2 MDOT will review the submitted mix design for compliance with project specifications.

12.4.3 MDOT will evaluate the submitted mix design tests by entering and running this data with MDOT=s HMA Mix Design computer program.

12.4.4 MDOT will evaluate Reclaimed Asphalt Pavement (RAP) mix designs and determine if the percent virgin to percent recycled conforms with MDOT procedures.

12.4.5 MDOT will test the physical properties of the aggregate samples for aggregate wear index (AWI), angularity index (AI), soft stone and percent crushed for compliance to specification.

NOTE: If a nomograph exists for an aggregate source, its value will be used for the mix design.

12.4.6 Submitted mix designs that meet MDOT evaluation of materials, documentation, mix design computer run and proper asphalt cement percent recycle for RAP mix designs will be accepted by MDOT for actual lab testing.

12.4.7 MDOT will then prepare Marshall specimens for testing stability and flow (ASTM 1559), bulk specific gravity (ASTM 2726) and prepare specimens for maximum theoretical specific gravity (ASTM 2041).

NOTE: MDOT does not oven-cure these samples. The mixture is warmed just long enough to quarter out the TMD and Marshall samples. The Marshall samples are then put in tins and into the oven to bring up to test temperature.

12.4.8 MDOT will run an extraction on mixture submitted and compare results to the mix design and evaluation of the percent of recovered asphalt cement, recovered asphalt cement penetration, aggregate gradation and percent crush.

12.5 Tolerance Limits for MDOT verification of submitted mix design.

12.5.1 Bulk Specific gravity of mixture V 0.026.

12.5.2 Theoretical maximum specific gravity V 0.019

12.5.3 Air Voids V 1.0%

12.5.4 Asphalt content V 0.3%

12.5.5 Percent crush must meet specification for project

12.5.6 Verification tolerance for crush particle content V 15%

12.5.7 Angularity Index must meet specification for project.

12.5.8 Stability must meet specification for project.

12.5.9 Flow must meet specification for project.

12.5.10 Aggregate gradation must meet design master gradation specification.

12.5.11Sieve 1 inch (25.0 mm) through 3/8 inch (9.50 mm) V 3.0%

12.5.12Sieve No. 4 (4.75 mm) through No. 50 (0.30 mm) V 2.0%

12.5.13Sieve No. 100 (0.15 mm) through No. 200 (0.075 mm) V 1.0%

12.5.14 If the penetration results from the extracted mixture qualify for a price reduction per Table 4.00-3 of the Special Provision, the mix design will be considered a failing design.

12.5.15 For all designs, the fines to asphalt ratio shall not exceed

1.200 percent. 12.6 Submitted Mix Design Review

12.6.1 All specification items and the tolerance limits between the submitted design and MDOT test results are reviewed.

12.6.2 Submitted mix designs that meet all tolerance limits will be reported out as passing. If not, the design process is stopped.

12.6.3 Notify the Traveling Mix Inspectors (TMIs), Project Engineer and Consultant as to the status.

12.6.4 The HMA Mix Design Engineer gives the final review and approval of the mix design.

12.6.5 The HMA Mix Design is reported out.

13. Modifications

13.1 It should be noted this procedure is a guideline only and variations from it are sometimes necessary. Other factors to be taken into account when determining optimum asphalt content are: roadway vertical alignment, traffic turning movements, commercial traffic volumes, environmental conditions, construction conditions, previous behavior of the aggregate in HMA mixtures and the surface upon which the mixture is being placed.

MICHIGAN TEST METHOD
FOR
SAMPLING HMA PAVING MIXTURES
BEHIND THE PAVER

1. Scope

1.1 This method covers the procedures for sampling HMA paving mixtures at the point of delivery immediately behind the paver and before initial compaction.

1.2 The values stated are to be regarded as the standard.

1.3 These procedures may involve hazardous materials, operations and equipment. They do not claim to address all of the safety and health issues associated with their use. It is the responsibility of each user to consult and establish appropriate safety and health practices and determine the applicability of regulatory limitations prior to use.

2. Significance and Use

2.1 Sampling is equally as important as testing, and the sampler will use every precaution to obtain samples that will show the nature and condition of the materials which they represent.

2.2 This sampling method may be used for:

2.2.1 Contractor Quality Control

2.2.2 Agency Quality Assurance

2.2.3 Investigations

3. Equipment

3.1 Sampling Plates - (3 each) The sampling plates used for all mixtures shall be rectangular and have a minimum size of 14 x 28 inches (360 x 720 mm) or 14 x 14 inches (360 x 360 mm). All plates will have a hole approximately 0.25 inches (6 mm) in diameter drilled through each of the four corners.

3.2 Lifting Handles and Wire Lead - Attach a 24 inch (600 mm) length of wire to the two holes on each side of the plate to serve as lifting handles. An additional wire lead is attached to one of the lifting handles for locating the buried plate in the pavement. This wire will extend to the edge of the pavement.

3.3 Non-absorbent containers with a suitable capacity of either 3.5 gallons (13 liters) or 5 gallons (19 liters).

3.4 Hammer and nails for securing plates and wire lead.

3.5 MDOT Approved Sampling Shovel (Fig. 2).

3.6 MDOT Approved Splitter

4. Composite Sample

4.1 Sample the HMA paving mixtures at the point of delivery immediately behind the paver and before initial roller compaction. One composite sample consists of a minimum of three increments collected within 10 feet longitudinally and across the width of the paving operation (Fig. 1).

4.2 Sample Size - The composite sample shall be governed by the special provision in the contract.

5. Sampling With Plates and Shovel – Use this method when sampling HMA directly over aggregate base, rubblized concrete, crush and shape HMA base, or a cold milled surface when paving operation is 3 feet or greater.

5.1 Determine the sample locations according to the special provision for QC/QA in the contract.

5.2 Place the plate with the wire lead attached to one of the handles at the designated location ahead of the paver. If conditions on the project require restricting movement of the plate, drive a nail through one of the holes in the plate and into the pavement.

5.3 Extend the wire lead beyond the edge of the pavement. Trucks, pavers, and/or materials transfer devices will be allowed to cross over the plate and/or wire lead.

5.4 After the mixture is placed, use the wire lead to locate the plate. Find and lift the wire handles out of the pavement. This will locate the four corners of the plate.

5.5 Once the plate edges are defined, use the shovel and dig downward through the thickness of the pavement until it is in contact with the plate. Push the shovel forward until the shovel is full. Lift the shovel up slowly, being careful not to lose any HMA. Place materials from shovel directly into sample container.

5.6 Remove sampling plates from pavement.

5.7 The Contractor will fill and level the void left in the pavement with HMA obtained from the paver's auger system. This material will first be placed in sampling buckets.

5.8 Distribute samples.

6. Sampling With Shovel (Without Plates) – Use this method when sampling over HMA and concrete surfaces when paving operation is 3 feet or greater. When paving operation is utilizing a windrow pickup machine, this sampling method shall also be used.

6.1 Determine the sample locations according to the special provision for QC/QA in the contract.

6.2 Using a sampling shovel at the random location dig directly downward into pavement until it comes into contact with the pavement surface. When in contact, push shovel

forward until sampling shovel is full of HMA and lift the shovel up slowly, being careful not to lose any HMA. Place materials from shovel directly into sample container.

6.3 The Contractor will fill and level the void left in the pavement with HMA obtained from the paver's auger system. This material will first be placed in sampling buckets.

6.4 Distribute samples.

7. Documentation

7.1 After the sample has been obtained, the attached form titled **Sample Identification for HMA Mixture Street Samples** will be filled out completely and included with the sample.

SAMPLE IDENTIFICATION FOR HMA MIXTURE STREET SAMPLES

CONTROL SECTION:	JOB NUMBER:	PROJECT ENGINEER:
DATE SAMPLED:	TIME SAMPLE TAKEN:	CONTRACTOR:
LOT, SUBLOT NUMBER AND LOCATION:	HMA MIX TYPE:	TONNAGE REPRESENTED:
REMARKS:		
SAMPLED BY:		

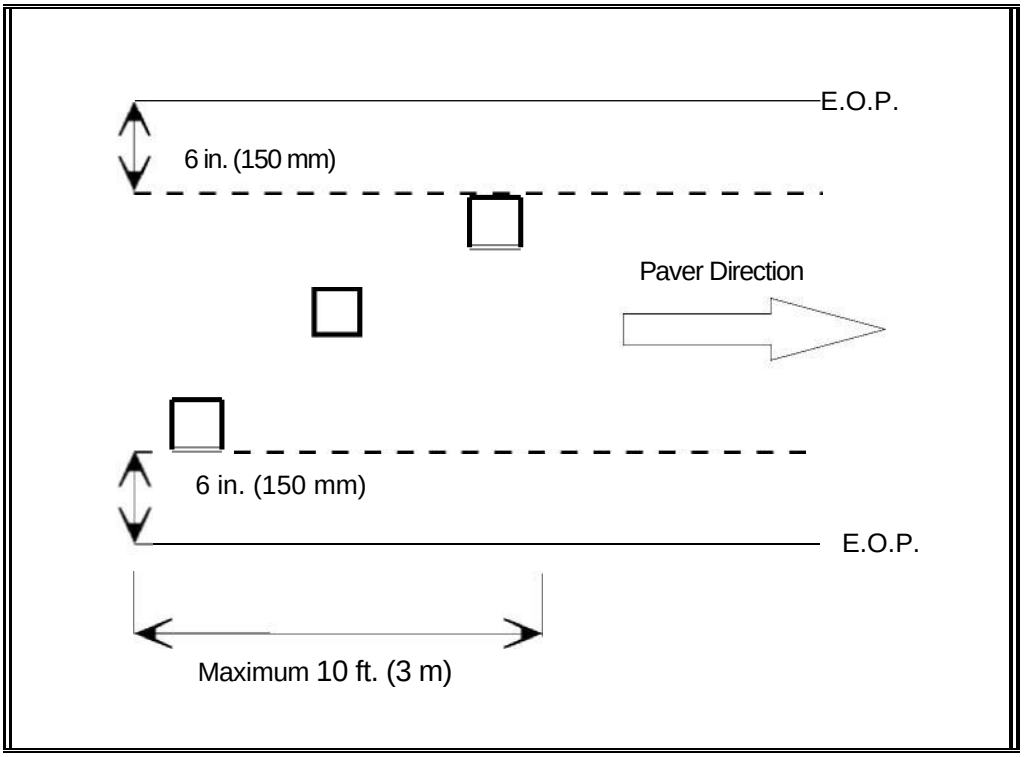

Figure 1: Sampling Pattern Behind the Paver

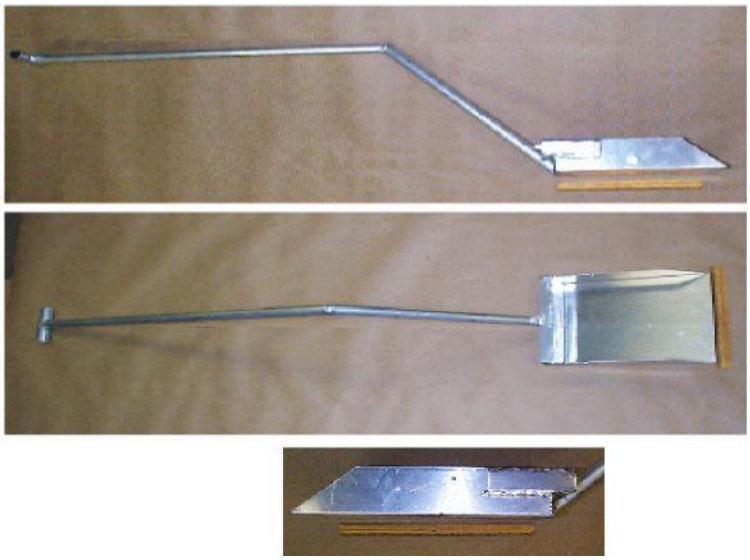

Figur 1: Incremental Sampling Pattern Behind the Paver

Figure 2: MDOT Approved Sampling Shovel

Dimensions: Overall Length = 5 Feet
Shovel Width = 10 Inches
Shovel Length = 12 Inches
Shovel Sides = 3 Inches (Minimum)

MICHIGAN TEST METHOD
FOR
QUANTITATIVE EXTRACTION OF BITUMEN
FROM HMA PAVING MIXTURES

1. Scope

1.1 These methods cover the quantitative determination of bitumen in HMA paving mixtures and pavement samples.

1.2 Except as described herein, the method will be in conformance with AASHTO T 164-14.

2. Modification

2.1 The "Checklist for HMA Mixture Analysis Vacuum Extraction", of the HMA Production Manual, will replace the procedure within Section 25 of AASHTO T 164-14.

2.2 The bitumen will be extracted using a non-hazardous, non-toxic, terpene based asphalt extraction solvent from Section 3, in place of those listed in Section 7 of AASHTO T 164-14.

3. Approved Extraction Solvents

3.1 The approved extraction solvents for Section 7 of AASHTO T 164-14 are as follows:

Hisol Plus
ASTEC Corporation
7750-650 Zionsville Road
Indianapolis, IN 46268
(800) 743-7770

Biogenic SE 374
Rochester Midland Corporation
P. O. Box 31515
Rochester, NY 14603
(800) 388-4762

Asphalt Solvent-DL
Wausau Chemical Corporation
2001 N. River Drive
Wausau, WI 54403
(800) 950-6656

Asphalt Extractor
Hydro-Chem Systems, Inc.
5550 Clay Ave. SW
Grand Rapids, MI 49548
(800) 666-1992

Asphalt XL-71
Hydro-Chem Systems, Inc.
5550 Clay Ave. SW
Grand Rapids, MI 49548
(800) 666-1992

3.2 MDOT will select the type of non-hazardous, non-toxic, terpene based asphalt extraction solvent selected from the approved extraction solvent list and notify the Contractor of the type to be used at the pre-production meeting. The asphalt extraction solvent selected for the project will not change during the project.

4. Evaluation Procedure

4.1 This evaluation procedure outlines the Department's approval process for non-hazardous, non-toxic, terpene based asphalt extraction solvents used for extraction of HMA mixtures.

4.2 Applying for an approved non-hazardous, non-toxic, terpene based asphalt extraction solvent must be done in writing and must contain the following information:

4.2.1 Name of the extraction solvent

4.2.2 Name of extraction solvent supplier

4.2.3 Location of the extraction solvent supplier

4.2.4 Quality control plan for manufacturing, product quality control, and delivery

4.2.5 A copy of the Safety Data Sheet (SDS)

4.2.6 Certification statement stating the asphalt extraction solvent is non-hazardous, non-toxic, and terpene based (by volume).

4.2.7 Test results for the following: (Test results must be from an independent Environmental Protection Agency (EPA) certified laboratory. The test results must be submitted to the Construction Field Services Hot Mix Asphalt Technical Services Unit). A copy of the laboratories certification must also be provided.

4.2.7.1 Flash point of 140 °F or above (closed-cup).

4.2.7.2 A maximum Specific Gravity of 0.90.

4.2.7.3 Total Toxic Organic (TTO) scan for constituents listed in table 2.3 of the MDEQ Michigan Manufacturers' Guide to Environmental, Health, and Safety Regulations: http://www.michigan.gov/documents/deq/deq-ess-caap-manufguide-chap2_313406_7.pdf.

4.2.7.3.1 Asphalt extraction solvent supplier must provide certification statement that asphalt extraction solvent meets all criteria found in Table 2.3 of the

MDEQ Michigan Manufacturers' Guide to Environmental, Health, and Safety Regulations. All hazardous constituents listed in Table 2.3 of the MDEQ Michigan Manufacturers' Guide to Environmental, Health, and Safety Regulations must be addressed. The hazardous constituents listed in Table 2.3 that cannot be analyzed at the regulatory levels can be covered with a certification statement, stating that those hazardous constituents are not present in the solvent.

4.2.8 Extract asphalt cement from a 2000 gram, 5.5% AC, polymer modified asphalt mix within 0.2% of the amount of asphalt used to construct the standard mix. (Submitted test results must be from an independent AASHTO accredited laboratory or successfully participate in the MDOT HMA Laboratory and Technician Qualification Program.) Please provide a copy of the laboratories accreditation or proof of successful participation in the MDOT HMA Laboratory and Technician Qualification Program. The following requirements must be met:

4.2.8.1 Using an amount of solvent not to exceed 2.0 gallons.

4.2.8.2 Using an amount of rinse water not to exceed 2.5 gallons

4.2.8.3 Must rinse through filter without evidence of clumping or coagulation of the solvent.

4.2.8.4 The solvent must be used at room temperature.

4.2.9 One 5 gallon sample of the extraction solvent shall be submitted with the application letter.

4.2.10 MDOT reserves the right for final approval of the submitted nonhazardous, non-toxic, terpene based asphalt extraction solvent used for extraction of HMA mixtures.

5. <u>Producer Requirements</u>

5.1 Companies with products on this list will be expected to comply with the following to stay on the list:

5.1.1 Produce the same quality of material as the material supplied for the original evaluation.

5.1.2 Provide only approved products to Department projects.

5.1.3 Promptly report to the Department any changes in company name, product name, company address or company ownership.

5.1.4 Notify the Department of any changes in production of the product. Any alteration that will change the product physically will require a reevaluation of the product.

6. Disqualification

6.1 Products may be removed from this list for any of the following:

6.1.1 Mislabeling products or substitution of products other than those originally submitted.

6.1.2 Failure of the product to meet any of the Department's requirements for this type of material.

6.1.3 Failure to work satisfactorily on the job.

7. Requalification

7.1 A product that has been disqualified and removed from the above list will be considered for re-evaluation only after submission of a written request, along with acceptable evidence that the problems causing the disqualification have been corrected.

8. Correspondence

8.1 Letters and samples referred to in this document should be directed to the following:

Michigan Department of Transportation
Construction Field Services
Secondary Complex
Attn: Hot Mix Asphalt Technical Services Unit
8885 Ricks Road
P. O. Box 30049
Lansing, MI 48909

MICHIGAN TEST METHOD
FOR
QUANTITATIVE MEASUREMENT OF HOT MIX ASPHALT (HMA) PAVEMENTS

1. Scope

This method shall be used to help assist the Contractor and Engineer in identifying segregation and taking corrective action to eliminate segregation when it is present in Hot Mix Asphalt (HMA) pavements.

2. Significance and use

2.1 This method requires the use of a nuclear density gauge and the MDOTMBITSEG2 computer program to assist in locating segregated areas and identifying limits of such areas. Contact the HMA Operations Unit at Construction Field Services for a copy of the MDOTBITSEG2 computer program. The HMA pavement materials shall be produced, transported, placed and compacted with the proper construction processes to provide uniform volumetric properties throughout the entire cross section of pavement.

2.2 This method may be used for:

2.2.1 Agency Acceptance Testing

2.2.2 Contractor Quality Control

2.2.3 Investigations

3. Equipment

3.1 Nuclear density gauge

3.2 MDOTMBITSEG2 computer program

4. Terminology

Segregation - Areas of Bituminous Pavement exhibiting non-uniform distribution of coarse and fine aggregate particles that is visually identifiable or can be identified by other methods.

Heavy Segregation - An area showing stone against stone, with little or no matrix visible.

Medium Segregation - An area showing significantly more stone than surrounding pavement with a lack of matrix.

5. Procedure

When heavy segregation is identified visually in the pavement by the Contractor or the Engineer, a set of six to fifteen one minute nuclear density measurements shall be taken by the Engineer in the segregated area, a similar set of readings shall also be taken in an adjacent non segregated area. The mean value of the density of the two areas shall be compared using MDOT's MBITSEG2 computer program. When it is determined that corrective action, as identified and recommended by the MDOTMBITSEG2 computer program, is needed, the Contractor shall implement corrective actions immediately and report them to the Engineer before the next day's paving begins. The Contractor shall also provide, in writing, the actions that will be taken to eliminate segregation. The Contractor, with the Engineer, shall closely monitor the in-place pavement when paving resumes. If, once paving resumes, heavy segregation is identified, the Contractor shall stop production and a complete evaluation of the manufacturing and paving process shall be completed. This evaluation shall follow the troubleshooting guide and suggested changes according to the equipment manufacturer's recommendations or the guide manual **AASHTO Segregation Causes and Cures for Hot Mix Asphalt.** Areas identified as heavy segregation by the MDOTMBITSEG2 computer program do not meet the Departments acceptance criteria for HMA pavement and full removal and replacement is required in these areas.

6. Measurement & Payment

No additional compensation will be made for corrective action required or operational changes to prevent segregation. This work will be considered as included in other contract items.

MICHIGAN TEST METHOD
FOR
TRANSVERSE SHEARING RESISTANCE OF COHESIVE SOILS

1. Scope

1.1 This method covers the determination of the transverse shearing resistance of cohesive soils by measuring the force required to cause failure in two shear planes of a soil cylinder. It is dependent upon minimal disturbance of the soil sample. This test is for strength information as opposed to specification requirements.

1.2 The limitations of the technique are defined by the following factors:

1.2.1 Soil materials such as sand, silt, peat, or gravel should not be tested for transverse shear.

1.2.2 Normal stress on the shear plane is unknown.

1.2.3 The shear plane is pre-determined.

NOTE 1 - When doubt exists as to soil composition, the test should be run and appropriate remarks noted. The user's judgement is essential.

2. Applicable Documents

2.1 MDSH&T, "Transverse Shearing Resistance of Cohesive Soil", Field Manual of Soil Engineering (Fifth Edition), January 1970, pp. 261-264.

2.2 Housel, W.S., "Method ST-14", Applied Soil Mechanics - Laboratory Manual of Soil Testing Procedures, 1957, pp. 61-66.

3. Summary of Method

3.1 An undisturbed soil sample is obtained in the field through the use of a standard core liner sampler. The soil core liner is transferred from the shipping tube to the transverse shear cylinder. This device suspends the small center section of the steel liner which produces two soil shear planes. Displacement of this center section is induced by adding equal weight increments to an attached load bucket at designated time intervals until failure. Deformation readings are taken from a dial gage and plotted on a graph against elapsed time. A second graph is prepared to determine the yield load (L_y). The value for transverse shearing resistance (S_C) is calculated from a given formula and reported in pounds per square foot (psf).

3.2 After the transverse shearing resistance of the sample has been determined, the Natural Moisture-Density Test (a separate test not included in this procedure) is performed on the soil recovered from the small section of the cylinder.

3.3 The exposed ends of the two remaining 3 inch cylinders are sealed with paraffin and stored for later use in the Unconfined Compressive Strength of Cohesive Soils Test (AASHTO Designation: T-208) or for a re-test of S_C.

4. Significance

4.1 A value for the strength of cohesive soils is necessary to accurately determine the bearing capacity of spread footings, pilings, lateral pressures against retaining walls, the stability of slopes and embankment foundations. This method provides a direct measurement of the static yield value (S_C) for these and other design purposes.

4.2 When four or more loads result in failure, the final results are essentially independent of the dynamic resistance and the rate of loading. It is assumed these results represent the applied stress capable of being sustained in static equilibrium.

4.3 Shearing stress is assumed to be independent of normal stress.

4.4 The slope of the curve representing the last 7 minutes of deflection for each cumulative load increment is taken to approximate the long term behavior of the soil sample.

4.5 The advantages of this technique include the following:

4.5.1 This method provides a direct measurement of the static yield value (S_C) of cohesive soils.

4.5.2 Vast MDOT experience with this method is a major aid in the interpretation of most Michigan cohesive soils.

4.5.3 All equipment and special apparatus for sampling and testing are readily available.

5. Definitions

5.1 Transverse Shearing Resistance or Static Yield Value (S_C) - the maximum load per unit area at which the soil sample will not suffer progressive deformation.

6. Interferences

6.1 Pebbles, pieces of wood, sand pockets, or other similar obstructions within the area of either shear plane may lead to erratic and undependable results.

6.2 Strong vibrational disturbances on the soil cylinder prior to or during the test may lead to undependable results.

7. Apparatus

7.1 Transverse Shear Device - A specially designed three-piece cylinder (see Figure 1c) shall be constructed of steel, aluminum, or other durable material. The cylinder ID shall

be 1.51 inches + 0.005 inches to readily accommodate the loading of the stainless steel liner containing the soil core. The cylinder shall supply the support for the dial gage.

NOTE 2: Dimensional drawings for the Transverse Shear Test apparatus are on file in the Geotechnical Services Unit. The materials used for the construction of the removable 1.0 inch shear section will limit the minimum load that can be initially applied to the soil core during the test procedure.

7.1.1 The removable shear section shall be held in place by two opposing thumb screws. An eye bolt shall be located at the bottom of this section to hold a shot bucket.

7.2 Static Loading Equipment - Galvanized steel shot buckets ranging in capacity from 100 to 500 in^3 shall be used to contain the increments of steel shot. The size of the bucket selected for the test is dependent upon the estimated failure load. Various sizes and loads of steel shot shall be used to produce the intended stress across the shear planes.

7.3 Transfer Jig - A transfer jig shall be used to support the shear cylinder in a substantially horizontal position. It must allow for the coaxial transfer of the soil sample and liner from the shipping tube into the shear cylinder with a minimum degree of disturbance (see Figure 1d).

7.4 Deformation Indicator - The deformation indicator shall be a dial gage graduated to 0.001 inches and shall have a minimum travel range of 1.0 inches.

7.5 Timer - A timing device shall be used to measure the elapsed testing time to the nearest second.

7.6 Balance - The balance shall have a sensitivity not less than 0.5% of any load within the range of 0 to 10 pounds.

7.7 Hand Mandrel - The hand mandrel shall have a plane circular pushing face with a 1.5 inch OD and a minimum overall length of 15.0 inches. This tool shall be used to eject the steel liner containing the soil sample from the shipping tube with negligible lateral disturbance (see Figure 1a).

7.8 Soil Extruder - The soil extruder shall consist of a solid steel shaft with a minimum length of 3.0 inches. The extruder shall have a plane circular pushing face with a 1.37 inches + 0.001 inches OD. This tool shall be used to eject the soil specimen from the 1.0 inch liner (see 8.4.2) and the soil sample from a 3.0 inch liner (see Figure 2).

7.9 Test Railing - The test railing shall consist of two identical steel bars. They shall be parallel, level, and separated by a distance of 2.15 inches + 0.05 inches. They shall be mounted at a height of no less than 16.0 inches from the work surface to accommodate a loading bucket. The test railing shall be designed to suspend the shear cylinder and to catch the 1.0 inch shear section after failure.

8. Procedure

8.1 The measurement procedure consists of applying uniform forces to two 1.5 in^2 shear planes at designated time intervals. Figure 3 shows a typical equipment set-up with the test in progress.

8.2 Sample preparation:

8.2.1 Remove the tape and paraffin seal from the ends of the brass shipping tube. Align the shear cylinder and the shipping tube on the transfer jig. Insert the hand mandrel into the shipping tube and push the steel liners containing the soil sample directly into the shear cylinder as shown in Figure 4. Avoid placing any lateral force on the steel liners. Pull the shipping tube straight back 1.0 inch while holding the steel liners in the shear cylinder with the hand mandrel. Use a trimming knife to carefully cut off the 3.0 inch soil liner that remains outside of the shear cylinder but still partially inside the shipping tube. Remove the remaining 3.0 inch soil liner from the shipping tube.

NOTE 3 - Seal the exposed ends of the severed soil section and store it for later use in either the Unconfined Compressive Strength Test or for a possible re-test of transverse shearing resistance (see Annex 1).

8.2.2 Estimate the failure load to the nearest 1.0 pound by physically feeling the exposed ends of the soil core. Line up the 1.0 inch liner sections with the 1.0 inch shear section. Re-seal the exposed ends of the sample with paraffin to prevent evaporation of soil moisture during the test. Place the loaded shear cylinder on the test railing.

8.3 Load Application:

8.3.1 Divide the estimated failure load by 6 to determine the weight of a single load increment. Weigh each load increment to within 1% of the incremental load. Pour the first increment of steel shot into the bucket and hang it on the eye bolt beneath the small shear section and remove the 2 thumb screws. Set the dial gage at zero and start the timer. Take deformation readings to the nearest 0.0001 inch at the end of 1, 3, 5, 7, 9 and 10 minute intervals (cumulative). Record all data on the Transverse Shear Test Worksheet, Form 1861C (see Figure 5). Express the deformation readings as the deflection x 10^{-3} inch. Immediately after 10-minute reading, carefully pour the next increment of steel shot into the bucket. Avoid any sudden jarring of the small shear section. Repeat the procedure for taking deformation readings.

8.3.1.1 Continue the loading and reading procedures every 10 minutes until the cumulative load causes complete failure.

NOTE 4: The first load increment cannot be less than 0.5 pounds. This is the approximate initial load resulting from the combined weight of the following items: (a) the 1.0 inch liner section containing the soil specimen, (b) the 1.0 inch shear section, (c) the shot bucket, and (d) the force exerted by the foot of the dial gage. Since the stress load is cumulative, only the first increment of steel shot shall be adjusted by this amount.

8.4 Remove all the soil liners from the shear cylinder after failure has been achieved. Examine the shear planes for obstructions (especially air or sand pockets). If an obstruction is found, refer to Annex 1. Otherwise, record "good shear" under "Remarks".

8.5 Specimen Recovery and Analysis:

8.5.1 Record the data determined from the recovery and analysis procedure on the Volumetric Analysis of Undisturbed Soil Worksheet, Form 1861 C-R (see Figure 6). An example of a completed form is shown in Figure 6a.

8.5.2 Smooth the shear planes on the 1.0 inch liner with a spatula. If additional soil is needed to completely fill either shear plane of the 1.0 inch liner, take a small amount of soil from the corresponding shear end of the 3.0 inch liner. Seal the exposed ends of the two 3.0 inch liners with paraffin and store them (see 3.3).

8.5.3 Weigh the 1.0 inch liner and specimen to the nearest 0.1 gram. Remove the specimen with the soil extruder. Place it in a tared container. Take care to recover the small amounts of soil left inside the 1.0 inch liner and on the soil extruder. Weigh the specimen and container to the nearest 0.1 gram. Weigh the 1.0 inch liner to the nearest 0.1 gram. Compute the wet weight of the specimen (W_1 - W_C = W) from both the tared container and 1.0 inch liner weighings. The difference, if any, between the two specimen weights must be no greater than 0.1 gram or an error has occurred in the recovery procedure.

8.5.4 Record the length of the sheared soil core to the nearest millimeter. For this method the core length shall be 1.0 inch, as determined from the specified shear cylinder dimensions (see Figure 1c).

8.5.5 Classify the specimen according to the properties listed under the heading "Classification of Wet Sample". Circle the appropriate terms.

NOTE: The last step in the Transverse Shearing Resistance Test procedure usually includes the first step in preparing the soil for the Natural Moisture-Density Test (see 3.2). Place the specimen in a pre-heated oven set at 230 F + 9 F for a minimum of 24 hours.

9. <u>Plotting and Calculation</u>

9.1 Deformation-Time Graph:

9.1.1 Prepare a graph of the deformation readings versus time for each load increment (see Annex 2). Refer each time-rate curve to a common origin by subtracting the deflection for the preceding 10-minute interval. The resulting series of curves expresses the tendency of the soil specimen to reach static equilibrium under increasing stress load.

9.2 Deformation-Load Graph:

9.2.1 Represent the slope of each deformation-time curve by taking the difference between the 3 minute and 10 minute deformation readings. Plot a graph of these differences against their respective cumulative loads (see Annex 3). Draw the best straight line through the points representing elastic deformation and a second line through the points representing plastic deformation. The ordinate at the point of intersection shall represent the ultimate load value or yield value (L_y) of the soil specimen. This value is recorded to the nearest 0.1 pound.

9.3 Calculation:

9.3.1 Calculate the transverse shearing resistance value (S_C) from the following equation:

$$S \quad L_y$$

$$c \; A \; t$$

where:

S_C = transverse shearing resistance value in psf

L_y = yield value in pounds

A_t = total area of the shearing planes in ft^2

9.3.2 The determination of the total area (A_t) is discussed in Annex 4.

9.3.3 To convert to kilopascals (kPa), multiply S_c by 0.04788 (SI conversion factor from ASTM E-380).

10. <u>Report</u>

10.1 The results of the Transverse Shearing Resistance Test (Sc) shall be reported in the Report of Test "Soil Mechanics" Form 1861 and the Soil Mechanics Analysis Form 1841A (see Figures 7, 8). These reports shall also include the results obtained from supporting tests (see Note 6).

10.1.1 The value for S_C shall be reported in pounds per square foot (psf).

10.1.2 All pertinent information regarding any deviation from the procedure or from acceptable limits shall be recorded under "Remarks".

NOTE 6: No single sample can adequately represent the regional characteristics of soil properties necessary for the evaluation of foundation stability. No single test can effectively determine soil strength. Therefore, the results for the Transverse Shearing Resistance Test are normally reported with the test results for (a) compression shearing resistance, (b) dry density, and (c) natural moisture characteristics. These results are further combined with the information obtained by the boring crew in the field. All of this data is represented graphically on individual boring charts and composite subsoils analysis charts (see Figure 8). When additional information is needed in evaluating soils of critical strengths, questionable plasticity, etc., the following supplemental tests may be performed and reported with S_C: (d) gradation, (e) Atterberg limits, (f) specific gravity, and (g) organic content.

11. Precision

11.1 Since soil is a natural material having inherent variability, this method may show a similar variability in results (often exceeding + 20%) for similar soil samples such as retests.

11.2 Since the gradual transition from elastic deformation to progressive deformation often results in the best approximation of the yield value L_y, this method is designed to show a similar transition in deformation and an approximation of L_y to the nearest 0.1 pound.

ANNEXES

A.1 Basis and Procedure for Re-test

A.1.1 For the following reasons the determined value for S_C may not represent true transverse shearing resistance of the cohesive soil sample:

A.1.1.1 An overestimation of the failure load causes the specimen to shear prematurely. Not enough points are plotted to adequately define the deformation-load curve. The results of the test shall be discarded and a retest performed.

A.1.1.2 An outlier appears in the results of several shear tests for samples obtained from the same soil deposit. An outlier usually reflects an error occurring in the test procedure, a damaged sample or an obstruction in either shear plane. The results of the test in question shall be discarded after a re-test has confirmed such an error.

NOTE A1: An outlier may reflect a real change in soil stratification. If the results of a re-test confirm a soil change, the shear value of both tests shall be included in the report.

A.1.2 The following procedure shall be used to perform a re-test of the cohesive soil sample:

A.1.2.1 Remove the paraffin from the ends of one of the remaining 3.0 inch steel liners. Vertically transfer the soil core from the 3.0 inch liner into the sectional re-test liner as shown in Figure 2. When possible, eject the soil core in the same direction in which it initially entered the liner. Estimate the failure load and reseal the exposed ends with paraffin. Use the transfer jig to insert the sectional re-test liner into the shear cylinder. Line up the middle 1.0 inch liner section with the 1.0 inch shear section.

A.1.2.2 Proceed with the re-test as described in the main text from "Load Application" (8.3) to the end of "Calculation" (9.3).

A.1.2.3 With the exception of a re-test that confirms a change in soil stratification, discard the results of the first test and report the results of the re-test as described in "Report" (10). If the re-test confirms a soil change, report the results of the first test with the re-test.

NOTE A2: It is not always evident whether an error occurred in the initial test or in the re-test. A second re-test may be necessary to determine the reliability of a value for S_C. In the rare case of two re-tests, all information pertaining to the difficulty shall be included in the report. One of the three 3.0 inch liners must be reserved for the Unconfined Compressive Strength Test.

A.2 Preparation of the Deformation-Time Graph

A.2.1 The following discussion provides an expansion of the procedure for preparing the deformation-time graph (9.1). Reference should be made to Figure 5a when reviewing this material.

A.2.2 The deformation readings taken from the dial gage are expressed as the deflection x 10^{-3} inches. The time intervals are expressed in minutes.

A.2.3 For the first test load the deformation readings (column labeled "Reading") and the increments of deflection (column labeled "Inc.") are the same. For each successive load application, the first increment of deflection (C) is found by subtracting the preceding 10 minute reading (A) from the 1 minute reading (B); 1.4 - 0.6 = 0.8, as shown in the typical example for the fourth load application (cum. load = 4). The increase in deflection (D - B) for each time interval is added to the preceding increment (C) and recorded as the increment for the next time interval (E). In the example 1.6 - 1.4 = 0.2 and 0.2 + 0.8 = 1.0, is the recording for the 3 minute increment. To determine the increment of deflection for each succeeding time increment within one load increment, use the formula: (D - B) + C = E. Thus, the increment of deflection for the 5 minute interval is (1.9 - 1.6) + 1.0 = 1.3, for the 7 minute interval is (2.3 - 1.9) + 1.3 = 1.7, for the 9 minute interval is (2.7 - 2.3) + 1.7 = 2.1, and for the 10 minute interval is (2.8 - 2.7) + 2.1 =2.2.

A.2.4 Each increment of deflection is plotted against its corresponding time interval within each load increment. A straight line is drawn between successive points to determine one curve. Points (C) and (E) belong to the curve for the fourth load increment. Each curve is referred to a common origin by subtracting the deflection for the preceding 10 minute interval as described in A.2.3.

A.2.5 A completed graph and worksheet is shown in Figure 5c.

A.3 Preparation of the Deformation-Load Graph

A.3.1 The following discussion provides an expansion of the procedure for preparing the deformation-load graph (9.2). Reference should be made to Figure 5b when reviewing this material.

A.3.2 The deflection difference represents the last 7 minutes of each load increment (box labeled "Diff."). This is found by subtracting the reading at the 3 minute interval from the reading at the 10 minute interval; 0.6 - 0.1 = 0.5 as recorded in "Diff." for the first load increment.

NOTE A3: It is assumed the dynamic effects of each load increment will have substantially subsided by the 3 minute reading. Thus, the slope of the curve representing the last 7 minutes of deflection is taken to approximate the long-term behavior of the soil sample.

A.3.3 The deflection difference is plotted against its corresponding cumulative load. At least four complete load increments are needed to determine the yield value L_y. Figure 5b shows L_y as 9.0 pounds.

A.3.4 A completed graph and worksheet is shown in Figure 5c.

A.4 Procedure for Calculation of S_C

A.4.1 The calculation of S_C is fixed by the particular design of the steel liners which house the soil sample. In accordance with the stated specifications for the manufacture of steel liners (see Figure 1b) the total area (A_t) of the two shear planes is derived as follows:

$$A_t = 2 \times (\pi d^2 / 4)$$

where:

A_t = total area of the two shear planes in inch^2

d = 1.375", the inside diameter of the steel liner per specification.

solving: $A_t = 3.0 \text{ in}^2$

The equation for transverse shearing resistance thus becomes:

$$S_C = \frac{L_y (144)}{A_t}$$

where:

S_C = transverse shearing resistance in psf

L_y = yield value in pounds

At = 3.0 in^2

144 = conversion factor for ft^2

A.4.2 To convert to kilopascals (kpa) multiply S_c by 0.04788 (SI conversion factor).

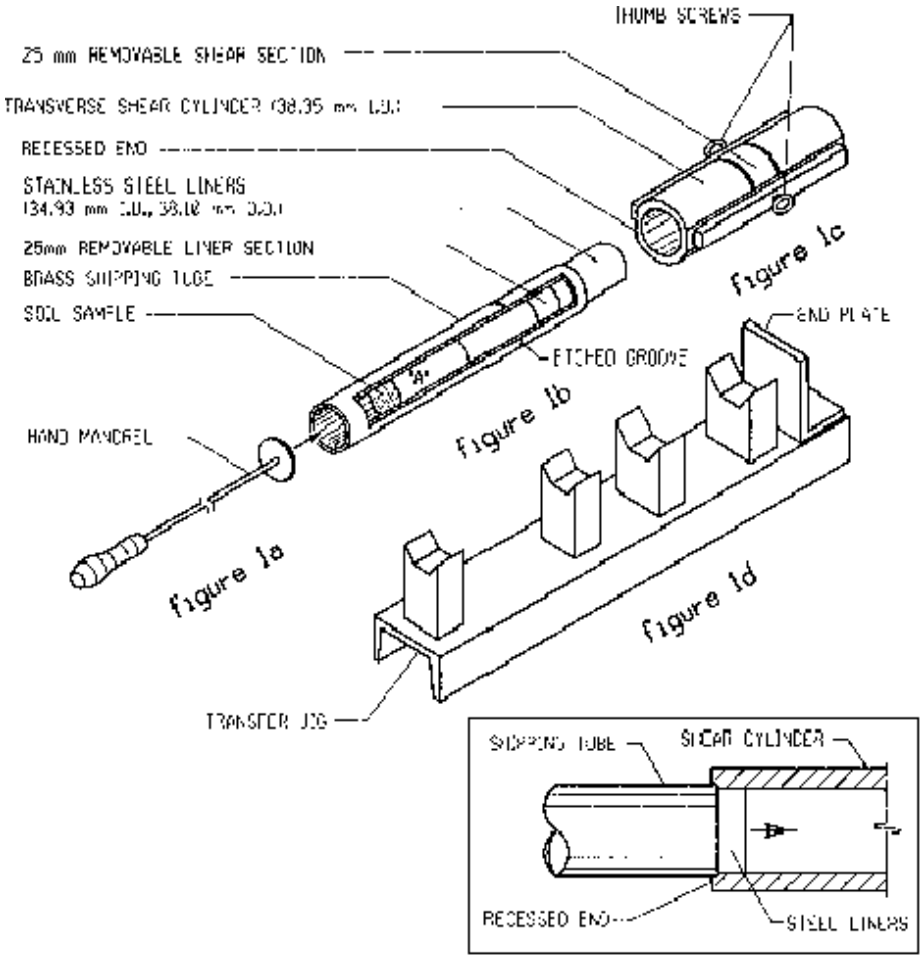

NOTE 1 THE ALIGNMENT OF THE SHEAR CYLINDER AND THE SHIPPING TUBE ON THE TRANSFER JIG SHALL BE COAXIAL AND HORIZONTAL. THE SHEAR CYLINDER SHALL ADJOIN THE END PLATE.

NOTE 2 THE GROOVE ETCHED ON ONE END OF THE SHIPPING TUBE MARKS THE LOCATION OF THE 25mm LINER SECTION. THIS END SHALL POINT TOWARDS THE RECESSED END OF THE SHEAR CYLINDER.

NOTE 3 DURING THE TRANSFER OPERATION THE SHIPPING TUBE SHALL FIT INTO THE RECESSED END OF THE SHEAR CYLINDER AS SHOWN IN THE BOXED ILLUSTRATION.

NOTE 4 THE 76mm SECTION OF THE STEEL LINER (MARKED "A") SHALL REMAIN OUTSIDE OF THE SHEAR CYLINDER UPON COMPLETION OF THE CORE TRANSFER.

Figure 1 - Transverse Shear and Core Transfer Apparatus

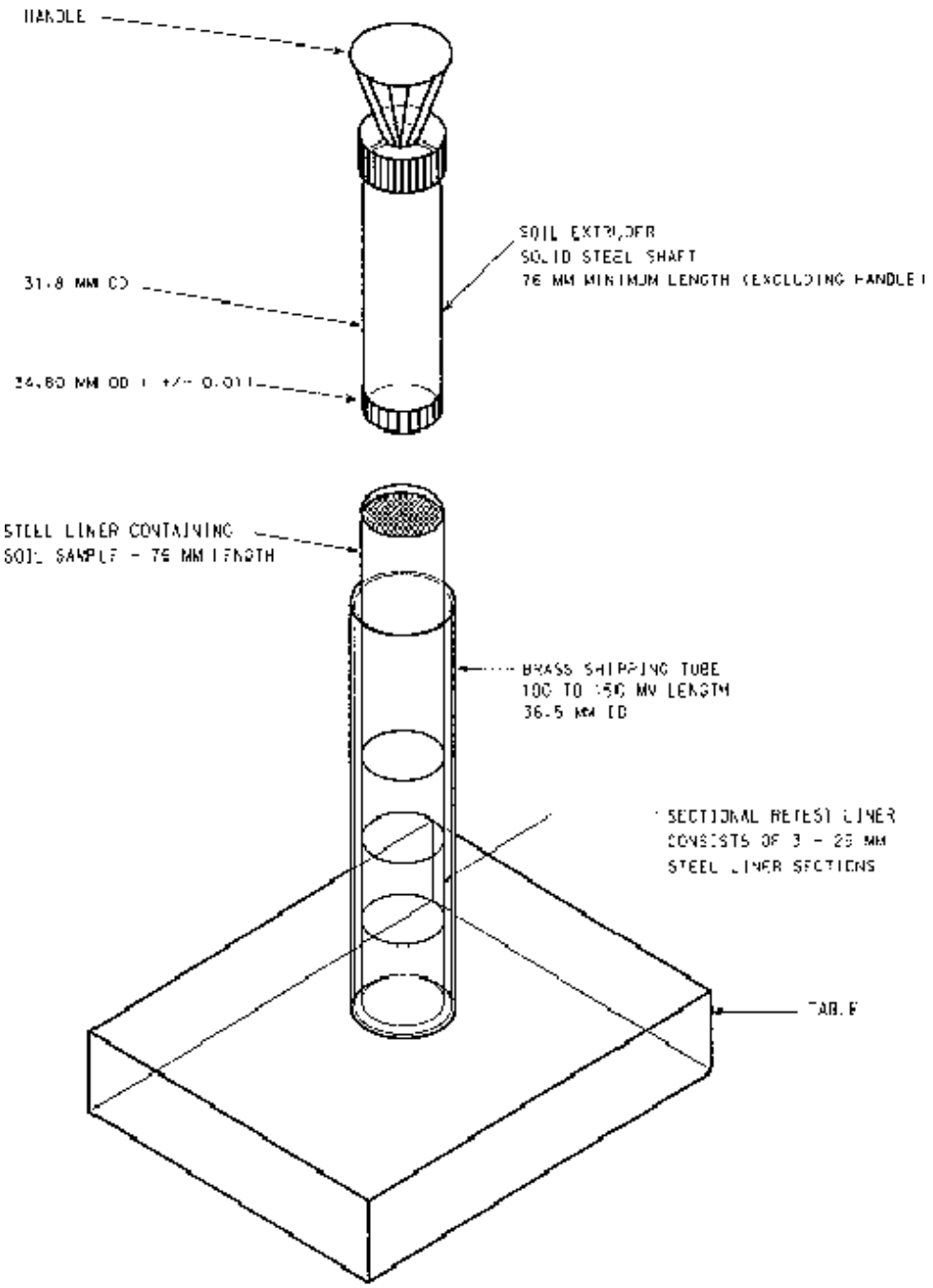

Figure 2 - Soil Extruder.

Michigan Department of Transportation
1861C (8/95)

TRANSVERSE SHEAR TEST
(WORK SHEET)

PROJECT NO.	LOCATION	LABORATORY NO.
BORING	FIELD SAMPLE NO.	DEPTH
TESTED BY:	DATE	CHECKED BY:	DATE

	Inc. Load =		Inc. Load =		Inc. Load =		Inc. Load =		Inc. Load =	
	Cum. Load =		Cum. Load =		Cum. Load =		Cum. Load =		Cum. Load =	
	Reading	Inc.	Reading	Inc.	Reading	Inc.	Reading	Inc.	Reading	Inc.
1										
3										
5										
7										
9										
10										
	Difference		Difference		Difference		Difference		Difference	

	Inc. Load =		Inc. Load =		Inc. Load =		Inc. Load =		Inc. Load =	
	Cum. Load =		Cum. Load =		Cum. Load =		Cum. Load =		Cum. Load =	
1										
3										
5										
7										
9										
10										
	Difference		Difference		Difference		Difference		**Difference**	

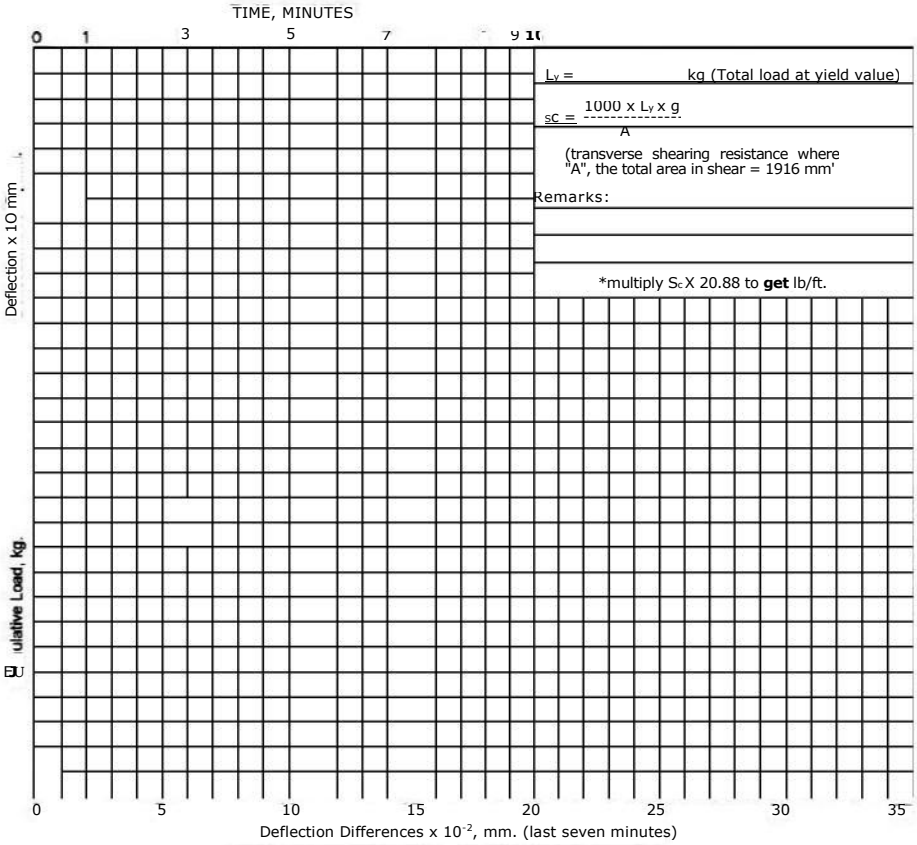

L_Y = kg (Total load at yield value)

$S_C = \frac{1000 \times L_Y \times g}{A}$

(transverse shearing resistance where "A", the total area in shear = 1916 mm'

Remarks:

*multiply S_C X 20.88 to **get** lb/ft.

1861C -R (8/95) **VOLUMETRIC ANALYSIS OF UNDISTURBED SOILS** | LABORATORY NO.

Length of core	L _____ cm.	
Volume of Core (L x 9.58), 3.492 cm diameter core basis	V _____ cc.	
Weight of core and container	Wi _____ **g.**	
Weight of container	W, _ _____ **g.**	
Wet weight of core	W1 - We = **W** _____ **g.**	
Wet bulk specific **gravity**	**w/v = G_B**	

Classification of Wet Sample:

(a) Consistency - very soft, soft, plastic, firm, stiff, very stiff, hard

(b) Color - gray, green, blue, yellow, brown, red, mottled, etc.

(c) Qualifying texture - sandy, fine sandy, gravelly, silty, pebbly

(d) Texture - sand, silt, clay, gravel, peat, muck

(e) Others - trace **of pebbles, trace of fine sand,** _____

Volumetric Analysis

Wet weight of sample + container		
Dry weight of sample + container	w_2	
Weight of container	W_e _____ **g.**	_____ **g.**
Wet weight of sample	W_1 - We = W - _____ **9.**	
Oven-dried weight of sample	W_o _____ **g.**	_____ **g.**
Moisture of sample	**W Wo = WW**____	
Percent moisture, dry weight basis	100 (W - W_o) /W_o =w _____	
Percent moisture, wet weight basis	100 (W - W.) /W = w_w _____	
	Volume of sample = V _____ cc.	
Wet bulk specific gravity	W/V = **G_B** _____	
Wet density	1000 x **G_B** = D $_{wet}$	kg/m^3
Dry bulk specific gravity	W_o /V = G.	
Dry density	1000 x G_o = D $_{dry}$ _____	kg/m'
Apparent specific gravity	**G_A**	

Refer to ST-5, ST-6, ST-9E

Summary of Volumetric Analysis Refer to ST-9

(a) Percent solids	100(G_o/G_A) = 1001V, /V)
(b) Percent liquids	100(W - W_o 1/V = 100 (W_w/V) = 100(V_w/V
(c) Percent air	100[1 - (V_s + V_w)1/V = 100(V_a /V)
(d) Percent voids (porosity)	100(1 - G_o /G_A) = 100I(V_w + V_a)/V1 = 100(V „/V) = n _
(e) Void ratio	V_v/V, = n/(1 - n) = e

Classification of Dry Sample:

_____ _____

_____ _____ _____

_____

_____ _____

_____ _____

MICHIGAN TEST METHOD
FOR
DETERMINING THE LIQUID LIMIT OF SOILS

1. Scope

1.1 This method covers an abbreviated procedure for production determination of liquid limit of soils.

1.2 Except as described herein, the method will be in conformance with AASHTO Method T89.

2. Modifications to Method B

2.1 Change in Section 10.2: A single 0.5 inch groove closure will be considered satisfactory when achieved at the required number of blows.

2.2 Change in Section 10.3: The required number of blows for a single groove closure shall be 25.

MICHIGAN TEST METHOD
FOR
THE MOISTURE-DENSITY RELATIONS OF SOILS USING A 5.5 POUND (2.5 kg) RAMMER AND A 12 INCH (305 mm) DROP

1. Scope

1.1 This test method is used to determine the relation between the moisture content and density of soils compacted in a 4-inch (107 mm) mold using a 5.5 pound (2.5 kg) rammer dropped from a height of 12 inches (305 mm).

1.2 Except as described herein, the method will be in conformance with AASHTO T99, Method C. This modification is to conform with field practice utilizing all soil particle sizes passing a 1-inch (25.0 mm) sieve.

0. Modification

2.1 In Methods C, change 0.75 inch (19.0 mm) to 1.0 inch (25.0 mm) to include the following sections: 2.7, 7.2, 8.4 and 13.1.4.

MICHIGAN TEST METHOD
FOR
UNCONFINED COMPRESSIVE STRENGTH OF COHESIVE SOIL

1. Scope

1.1 This method covers the determination of the unconfined compressive strength of cohesive soil in the undisturbed and remolded conditions, using strain-controlled application of the test load. The primary purpose of the unconfined compression test is to obtain quickly approximate quantitative values of the compressive strength of soil possessing sufficient coherence to permit testing in the unconfined state.

1.2 Except as described herein, the method will be in conformance with AASHTO Method T208. These modifications document MDOT standard practice. The Section numbering conforms to the numbering in ASSHTO method T 208.

8. Calculations (Replaces Sections 8.1 through 8.4)

8.1 Prepare a load-deformation curve from the information recorded during the test procedure (Section 7.1).

NOTE: A continuous load-deformation chart will be generated automatically by constant strain-rate compression machines such as those manufactured by the Instron Corporation.

8.2 From the load-deformation curve, determine the maximum recorded load, P, in Pound Force, which is achieved prior to exceeding 15 percent deformation.

8.3 Calculate the unconfined compressive strength, q_u, to three significant figures, or nearest 20 psf, as follows:

$q_u = (P/A) \times 144$

where:

P = maximum applied load in lbf, which is achieved at or before 15 percent deformation is reached, as determined in Section 8.1

A = uncorrected cross-sectional area of the specimen in square inches

8.4 Calculate the unconfined Compressive Shearing Resistance, S_{uc}, to three significant figures, or nearest 20 psf, as follows:

$S_{uc} = (q_u/2)$

MICHIGAN TEST METHOD
FOR
NATURAL MOISTURE-DENSITY DETERMINATION
OF UNDISTURBED LINER SAMPLES

1. Scope

1.1 This method covers the determination of the natural moisture content and dry density of a portion of an undisturbed liner sample following transverse shear testing.

2. Significance

2.1 For cohesive soils for which this test is appropriate, this method supplies a reasonable approximation of in-place moisture-density conditions.

3. Apparatus

3.1 *Liner Ring* - A stainless steel liner ring 1.0 inch long and 1.37 inches internal diameter.

3.2 *Soil Extruder* - the soil extruder shall consist of a solid steel or brass shaft with a minimum length of approximately 3.0 inches. It shall have a plane circular pushing face with a 1.36 inches outside diameter perpendicular to the long axis of the shaft.

3.3 *Glass Plate* - Approximately 4 inches x 4 inches or larger.

3.4 *Spatula* - With stiff, straight edged blade at least 3.0 inches long.

3.5 *Drying Container* - May be can lid, watch glass, or other suitable container approximately 80 mm in diameter.

3.6 *Balance* - Sensitive to 0.1 gram and at least 200 grams capacity.

3.7 *Oven* - A thermostatically-controlled drying oven capable of maintaining temperatures of 230 ^{o}F + 9 ^{o}F for drying samples.

4. Procedure

4.1 Upon completion of the Transverse Shearing Resistance Test of Cohesive Soils (MTM 401-01), the 1.0 inch ring shall be pulled on free of the testing machine and placed one soil side down on the glass plate. The top surface shall be carefully smoothed with the straight edge of the spatula supported by the upper edges of the liner. No voids, depressions, humps or projections may be permitted. The sample shall then be reversed and the second side of the sample similarly smoothed.

4.2 Weigh the ring containing the wet soil and record the weight, (W_1), on line 3 of the data sheet (see example attached).

4.3 With the soil extruder, push the sample carefully from the stainless steel ring and place the entire sample on the pre-weighed drying container, being careful to scrape all the material from the sides of the ring.

4.4 Weigh the empty liner ring (W_c) and subtract from the weight obtained in 4.2 to obtain the wet weight, (W), of the soil core (upper portion of sheet).

4.5 Weigh the sample in the drying container and subtract container weight to confirm that the entire sample was transferred (under Volumetric Analysis, middle portion of sheet). If a small weight loss occurs, a slight pro-rated volume correction may be made.

4.6 Dry the sample to constant weight in the 230 ^{o}F + 9 ^{o}F oven. Overnight drying will clearly be sufficient for samples of this size without extra weighings to assure no further weight loss.

4.7 Weigh and record the dry weight of sample and container, (W_2), and subtract container weight, (W_c), to establish net dry weight of sample (W_o).

4.8 Complete calculations as shown on the attached example work sheet for weight of moisture (W_w), percent moisture, dry weight basis (w), dry bulk specific gravity (G_o) and dry density (D_{dry}). Wet bulk specific gravity (G_o), percent moisture, wet weight basis (w_w), wet density (D_{wet}) and percent liquids by volume may also be determined as shown in those calculations with an asterisk.

1861C-R (8/95) **VOLUMETRIC ANALYSIS OF UNDISTURBED SOILS** rABORATORY NO.

Length of core L _____ CM.

Volume of Core (L x 9.58), 3.492 cm diameter core basis cc.

Weight of core and container W_t_____ g.

Weight of container W_e_____ g.

Wet weight of core 1We = W _____

Wet bulk **specific gravity** **w/v = G_B**_____

Classification of Wet Sample:

(a) Consistency - very soft, soft, plastic, firm, stiff, very stiff, **hard**

(b) Color - gray, green, blue, yellow, brown, red, mottled, etc.

(c) Qualifying texture - sandy, fine sandy, gravelly, silty, pebbly

(d) Texture - sand, silt, clay, gravel, peat, muck

(e) Others - **trace of pebbles, trace of fine sand,** _____

Volumetric Analysis

Wet weight of sample + container **W1 - -** **g.**

Dry weight of sample + container **W2** **g.**

Weight of container **w_c** **9.** **9.**

Wet weight of sample **W_1 - *Wc* = W** **.9.**

Oven-dried weight of sample **w_c.** _____ **g.** **g.**

Moisture of sample **W - W_o = W_W** _____ **g.**

Percent moisture, dry weight basis **100 1W - Wo) /Wo = w** _

Percent moisture, wet weight basis **100 1W - W_o)** *NV = w_w* _____

Volume of sample = V cc.

Wet bulk specific gravity **W/V = G_B** _____

Wet density **1000 x G_B =** ()wet kg/m'

Dry bulk specific gravity W_oN = G.

Dry density 1000 x G. = D dry _____ **kg/m'**

Apparent specific gravity **G_A** _____

Refer to ST-5, ST-6, ST-9E

Summary of Volumetric Analysis Refer to ST-9

(a) Percent solids 100(G_o/G_A) = 100(V_s/V)

(b) Percent liquids 1001W - W_o1/V = **1001W** **= 100(V_w/V)**

(c) Percent air 10011 - (V_s + V_w1l/V = 100(V_s/V) _____

(d) Percent voids (porosity) 100(1 - G_o /G_A) = 100[(V_w + V_o)/V] = 100(V„ /V) = n

(e) Void ratio V_v/V_s = n/(1 - n) = e

Classification of Dry Sample: _____

MICHIGAN TEST METHOD
FOR
NATURAL MOISTURE CONTENT
DETERMINATION OF DISTURBED SOILS SAMPLES

1. Scope

1.1 This method covers the determination of the natural moisture content of a disturbed soils sample which is immediately sealed in an appropriate container and kept there until tested.

1.2 This procedure is appropriate for soil of any classification.

2. Apparatus

2.1 *Sample Container* - An appropriate vessel which will not deteriorate on contact with water and soil, can be sealed easily to retain soil moisture, and will readily withstand the 230 EF V 9 EF drying temperature. Sixteen ounce seamless tin cans with cover have worked well, sealed with masking tape, duct tape, etc., and are recommended.

2.2 *Balance* - Sensitive to at least 1 gram and having at least 1000 grams capacity.

2.3 *Oven* - A thermostatically controlled drying oven capable of maintaining a temperature of 230 EF V 9 EF for drying samples.

3. Procedure

3.1 The sample is received as sealed in the field and should first be examined for any break in the seal. If the seal is satisfactory, the sealing should be removed and the sample with container weighed immediately and recorded on the first line of the work sheet (see attached sample). If moisture has condensed on the inside of the cover, the cover should be weighed as part of the container. (If sample is not adequately sealed when received, the sample should be rejected.)

3.2 Dry the sample and container in the drying oven for at least 12 hours or to constant mass, weigh, and record on line 2 and line 5 of the work sheet (wt. of dry soil and dish).

3.3 Subtract the dry weight from the wet weight to obtain mass of water in sample.

3.4 Carefully remove all of the dried soil from the container and determine the mass of the empty container. Record on line 6, and subtract from line 5, to determine the net mass of the dry soil - line 7.

3.5 Determine percentage moisture (dry basis) from mass of water and mass of dry soil - line 4.

Project No. _____ Job No.
Lab No. Soils No. _____
Date Received _____ Date Tested
Tested by _____
Checked by_____

NATURAL MOISTURE

	A	B	C	D	
Wt. of Wet Soil and Dish(g)					Line 1
Wt. of Dry Soil and Dish(g)					Line 2
Wt of Water.....(g)					Line 3
Percent of Moisture					Line 4
Wt. of Dry Soil and Dish(g)					Line 5
Wt. of Dish ..... (g)					Line 6
Wt. of Dry Soil .....(g)					Line 7

MICHIGAN TEST METHOD
FOR
MAGNETIC PARTICLE DETERMINATION FOR SOILS OR AGGREGATES

1. Scope

1.1 This method provides a uniform means of determining the magnetic particle content of the coarser portion of soils or aggregates, including industrial byproducts. It is not a means of determining iron content.

2. Apparatus

2.1 Balance, 1000 g minimum capacity, accurate to nearest gram.

2.2 Magnet of 10 pound 1 pound (4.5 kg .45 kg) lifting capacity, with keeper bar. See Figure 1 for configuration of ends of current magnet, which should be approximated if possible.

2.3 No. 8 (2.38 mm) sieve.

2.4 Stencil brush (stiff bristles).

2.5 Spatula.

2.6 Collection container, large enough and with sufficiently high walls that magnet may be held within it and retained material brushed off without loss of material.

Figure 1

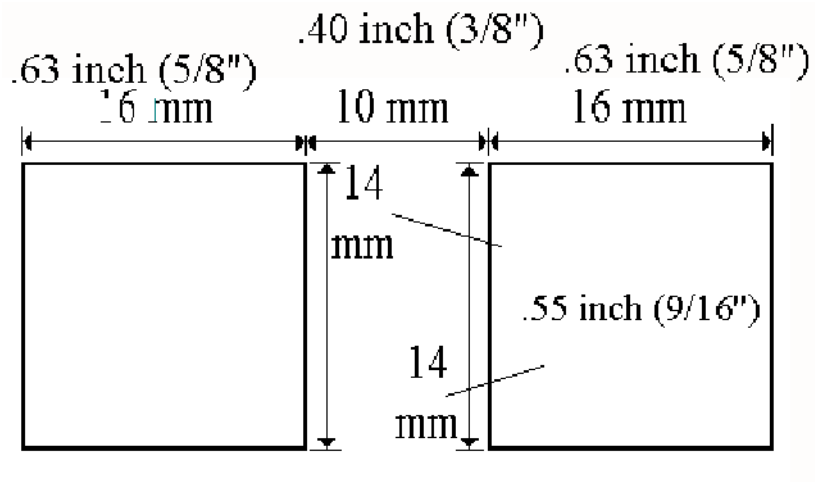

Approximate end configuration of magnet

3. Procedure

3.1 The sample shall be dried to constant weight at a temperature no greater than 140 ^{oF} (60 C).

3.2 Quartering may be done before or after drying. Sample size should range from about 200 grams (finer grained samples) to 1000 grams (larger grained samples).

3.3 The dry sample shall be sieved over a No. 8 (2.38 mm) sieve with only the retained portion used for magnetic separation. Note that the sample can be run on retained No. 10 (2.00 mm) or retained No. 4 (4.76 mm) material, but the deviation must be noted with the results.

3.4 Determine the mass of the material to be magnetically separated to the nearest gram.

3.5 Spread the material on a counter covered with brown counter paper and move the magnet through the materials slowly, picking up all particles that the magnet will pick up. The spatula will assist in spreading and sorting. As each load of material is picked up, empty it into the collection container, using the stencil brush to clean the magnet each time.

3.6 Determine mass of separated magnetic particles to the nearest gram and calculate percentage relative to the initial retained mass.

4. Report

4.1 Results should be shown as Magnetic Particles, percent. If determined on other than retained No. 8 (2.38 mm) material, add the note: "Retained _____ basis", showing on what sieve the separation was made.

MICHIGAN TEST METHOD
FOR
ELECTROCHEMICAL TESTING OF MECHANICALLY STABILIZED EMBANKMENTS

1. Scope

1.1 These tests evaluate the suitability of backfill to be used with metals required in various Mechanically Stabilized Embankments.

2. Purpose

2.1 Supplemental Specification 2.08(8) was written to protect various metals located in Mechanically Stabilized Embankments from accelerated corrosion. It may be used to protect other metals also, such as, water mains, load bearing piling and sheet piling.

The following table shows acceptable limits:

TABLE - ELECTROCHEMICAL PROPERTIES

PROPERTY	LIMITS
Hydrogen-ion concentration (pH)	5-10
Electrical Resistivity, min.	3,000 ohm-cm
Chlorides, max.	200 ppm *
Sulfates, max.	1,000 ppm *

*Tests not required when pH is at least 6.0 but less than 8.0, and the resistivity is greater than 5,000 ohm-cm.

The testing procedures for determining the electrochemical properties are as follows:

3. Field Determination of Hydrogen-Ion Concentration (pH)

3.1 Apparatus and Materials

3.1.1 Portable pH meter suitable for rapid determination of soil pH including probe and support equipment.

3.1.2 pH standard solution of pH 7.

3.1.3 Disposable cups, 2.0 ounces min., wax coated or plastic type.

3.1.4 Teaspoon or small scoop.

3.1.5 Wash bottle with distilled water.

3.2 Procedure

3.2.1 At five randomly selected sites within the proposed source, a sample of soil shall be obtained from below the "A" horizon.

3.2.2 Place 2 to 4 level spoonfuls of soil sample into the disposable cup and add an equivalent number of teaspoons of distilled water to the soil in the cup.

3.2.3 Mix water and soil by stirring. The specimen is now ready for testing.

3.2.4 Standardize pH meter using standard solution. Follow instructions provided with pH meter.

3.2.5 Insert pH probe into test specimen and read. If the pH reading is unstable when the electrode is immersed in the soil slurry, leave the electrode immersed until the pH reading has stabilized. In some cases, this waiting period for the stabilization of pH reading may be as long as five minutes.

3.3 *Reporting* - Record the following data on acceptable forms:
- Identify location where samples were taken.
- Depth at which sample taken.
- Record pH readings.

4. Determination of Resistivity

The resistivity test is an indication of the soluble salts in the soil. The backfill material shall be tested by an approved portable earth resistivity meter either at the source or in the laboratory.

4.1 Field Determination of Resistivity

4.2. Apparatus and Materials

4.2.1 Portable earth resistivity meter suitable for rapid in place determination of soil resistivity including probes, rods, and necessary support equipment.

4.2.2 Distilled or deionized water.

4.3 Test Procedure

4.3.1 At five randomly selected sites within the proposed source, insert the field probe into the soil between 6 and 12 inches. Electrode spacing shall be in accordance with manufacturer's recommendations for the depth of proposed excavation. Measure the resistivity.

4.3.2 Remove the field probe and pour about 2.0 ounces of distilled water into the hole.

4.3.3 Re-insert the probe, while twisting to mix the water and soil, then measure the resistivity.

4.3.4 Withdraw the probe and add an additional 2.0 ounces of distilled water.

4.3.5 Re-insert the probe and again measure the resistivity of the soil.

4.3.6 Record all three readings. The lowest of the three readings will be considered the resistivity of the material at that location.

4.4 *Reporting* - Record the following data on acceptable forms:
- Identify location of test site(s).
- Record electrode spacing.
- Identify meter units and record readings.
- Compute and record ohm-centimeter values.

4.5 Laboratory Determination of Resistivity

4.6 Apparatus and Materials

4.6.1 Earth resistivity meter suitable for laboratory testing, a.c. type, such as manufactured by Associated Research, Inc.; Biddle, Inc.; Soil Test, Inc.; Bison Instrument Co., Inc. or approved equal.

4.6.2 Soil box, see Figure 1.

4.6.3 U.S. Standard Sieve, No. 8 (2.36 mm).

4.6.4 Pans, metal, 12 x 12 x 2 inch approximate.

4.6.5 Oven, 200 ^{o}F maximum, constant temperature cabinet.

4.6.6 Balance, 5 kg. capacity, accurate to 10 grams.

4.6.7 Distilled or deionized water.

4.7. Test Procedure

4.7.1 At five randomly selected sites within the proposed source, a sample of approximately 4000 gm shall be obtained from below the "A" horizon.

4.7.2 Screen each sample through a No. 8 (2.36 mm) sieve.

4.7.3 If the sample is too moist to be sieved, dry it in a 140 ^{o}F oven and then break up all clods. Do not crush rocks. Only natural material passing the No. 8 (2.36 mm) sieve is to be used for the test.

4.7.4 Quarter or split out about 1,300 gm of the passing No. 8 (2.36 mm) material.

4.7.5 If the sample has been dried, add about 150 mL of distilled water to the 1,300 gm of soil and thoroughly mix. If the sample has not been dried, see 4.7.12.

4.7.6 After the soil sample is thoroughly mixed, place and compact it (moderate compaction with the fingers is sufficient) in the soil box. The soil box shall be completely filled and level with the top.

4.7.7 Measure the resistivity of the soil in accordance with the instructions furnished with the meter.

4.7.8 Remove the soil from the soil box and add an additional 100 mL of distilled water and again thoroughly mix.

4.7.9 Again place and compact the soils in the soil box and measure its

resistivity. 4.7.10 Repeat this procedure once more.

4.7.11 If the resistivity of the soil has not followed a trend of high resistivity, low resistivity, and then an increase in resistivity for the preceding additions of distilled water, continue to add water to the soil in about 50 mL increments; mixing, placing, compacting, and measuring resistivity for each increment, until a minimum resistivity is obtained.

4.7.12 If the sample has not been dried, begin the test procedure by adding 50 mL of distilled water in lieu of 150 mL specified above. Continue to add 50 mL increments of distilled water followed by mixing, placing, compacting, and measuring until a minimum value of resistivity is measured.

4.7.13 Record the test value that is the minimum value of soil resistivity at any moisture content.

4.8 *Reporting* - Record the following data on acceptable forms.
- Identify location where samples were taken.
- Depth at which sample taken.
- Identify meter units and record all readings.
- Compute and record ohm-centimeter values.

(See Figure 1.)

5. Trimetric Determination of Soluble Chloride in Soils

5.1 Apparatus and Materials

5.1.1 Silver nitrate solution (1 mL of solution is equivalent to 1 mg of chloride). Dissolve 4.79 grams of reagent grade silver nitrate in distilled water and dilute to one liter.

5.1.2 Potassium chromate indicator solution. Dissolve 10 grams of reagent grade potassium chromate in distilled water and dilute to 100 mL. Add enough of the silver nitrate solution prepared in section 5.1.1 to produce a slight red precipitate. Filter to remove any precipitate.

5.1.3 A pH meter including probe and calibrated buffers.

5.1.4 Sodium hydroxide solution. Dissolve 2 gram of reagent grade sodium hydroxide in 100 mL of distilled water.

5.1.5 Acetic acid, 5 percent. Pour 10 mL of reagent grade glacial acetic acid into 190 mL of distilled water. Mix.

5.1.6 Buret, 50 mL capacity, with 0.1 mL graduations.

5.1.7 Class A volumetric pipet, 30 mL (and smaller if needed).

5.1.8 Erlenmeyer flask, 500 mL and 250 mL.

5.1.9 Laboratory balance accurate to 0.1 gram.

5.1.10 Distilled water.

5.1.11 Filtering funnel, 75 mm top diameter.

5.1.12 Filter paper 12.5 cm, Whatman No. 41, or equivalent.

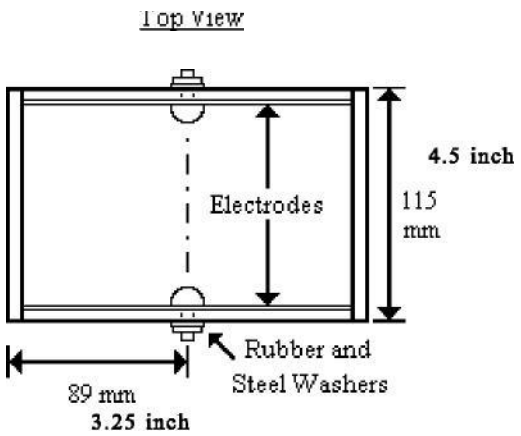

Figure 1

Materials List:

Bottom - 1 piece plastic 6.5 x 4.5 x 0.25 inch (165 x 115 x 6.4 mm)
Ends - 2 pieces plastic 4.5 x 1.75 x 0.25 inch (115 x 45 x 6.4 mm)
Sides - 2 pieces plastic 6.0 x 1.75 x 0.25 inch (152 x 45 x 6.4 mm)
Electrodes - 2 pieces 20 gauge stainless steel 6.0 x 1.75 inch (152 x 45 mm)
Machine Screw - 2 each No. 8 - 32 x 0.75 inch (19 mm) round head with washer and nut, stainless steel
Washers - 2 each rubber

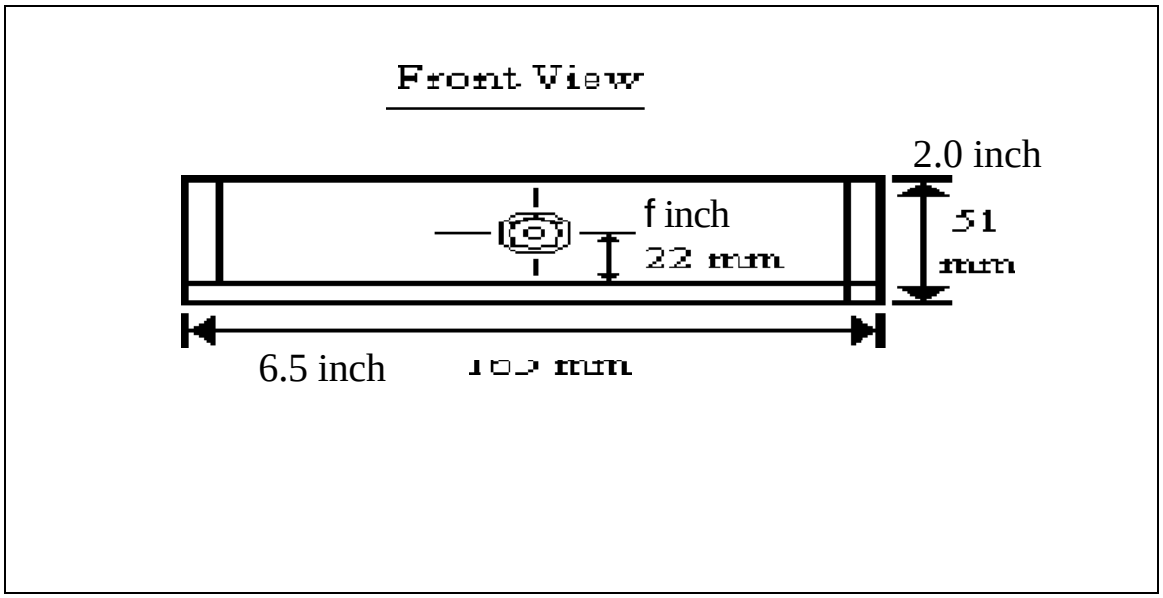

Figure 2

Figures 1 and 2 Shows the Soil Box for Laboratory Resistivity Determination

5.2 Procedure

5.2.1 At each of five randomly selected sites within the proposed source, a sample of approximately 200 grams shall be obtained from below the "A" horizon and placed in approved containers (five samples, five containers).

5.2.2 Weigh 100.0 gm of a soil (passing a No. 40 (425 μm) sieve) sample into a 500 mL Erlenmeyer flask. Add 300 mL of distilled water, then stopper the flask and shake it vigorously for about 30 seconds. After one hour, repeat the shaking. Let the sample settle overnight.

5.2.3 Slowly decant, and filter about 100 mL to 150 mL of the liquid (supernatant extract) through Whatman No. 41 filter paper.

5.2.4 Pipet 30.0 mL of the filtered extract into a 250 mL Erlenmeyer flask. Add 20 mL of distilled water.

5.2.5 Check the pH; the range should be between 6.3 and 10.0. If the pH is below 6.3, add sodium hydroxide solution to adjust to the above range; if the pH is above 10.0, add acetic acid to adjust to the above pH range.

5.2.6 Add two drops of potassium chromate indicator solution.

5.2.7 With vigorous stirring, titrate with silver nitrate solution (from the 50 mL buret) until the faint reddish-brown tinge of the indicator persists for at least 30 seconds. If the titration is over 30 mL, take a smaller sample aliquot so as

to keep the titration volume below this value. Dilute any smaller sample to about 50 mL with distilled water before pH adjustment and titration.

5.2.8 Calculate chloride content of soil as follows:

ppm chloride = 100 x (mL titration - 0.2 mL blank)*
*for a 30 mL sample aliquot

5.3 Reporting

5.3.1 Record the following data on acceptable forms:
- Identify location(s) at which samples were taken
- Depth at which sample was taken
- ppm chloride in soil

6. Gravimetric Determination of Soluble Sulfate in Soils

6.1 Apparatus and Materials

6.1.1 Muffle furnace

6.1.2 Hot plate

6.1.3 Beaker, 400 mL

6.1.4 Graduated cylinder, 100 mL

6.1.5 Porcelain crucible, 30 or 40 mL capacity, low or high form

6.1.6 1:1 hydrochloric acid. Carefully pour 100 mL of reagent grade 37% hydrochloric acid into 100 mL of distilled water. Mix.

6.1.7 Barium chloride, 20% solution. Dissolve 100 grams of reagent grade barium chloride in distilled water and dilute to 500 mL.

6.1.8 Distilled water

6.1.9 Laboratory balance accurate to 0.1 gram

6.1.10 Analytical balance accurate to 0.0001 gm

6.1.11 Erlenmeyer flask, 500 mL

6.1.12 Metal or suitable cooling pad

6.1.13 Stirring rod, glass

6.1.14 Filtering funnel, 75 mm top diameter

6.1.15 Filter paper, 12.5 cm, Whatman No. 41 and Whatman No. 40

6.1.16 Small brush

6.1.17 Class A volumetric pipet, 30 mL

6.2 Procedure

6.2.1 At each of five randomly selected sites within the proposed source, a sample of approximately 200 grams shall be obtained from below the "A" horizon and placed in approved containers (five samples, five containers).

6.2.2 Weigh 100.0 gm of a soil (passing a No. 40 (425 μm) sieve) sample into a 500 mL Erlenmeyer flask. Add 300 mL of distilled water, then stopper the flask and shake it vigorously for about 30 seconds. After one hour, repeat the shaking. Let the sample settle overnight.

6.2.3 Slowly decant, and filter about 100 mL to 150 mL of the liquid (supernatant extract) through Whatman No. 41 filter paper.

6.2.4 Pipet 30.0 mL of the filtered extract into a 250 mL beaker. Add 10 mL of 1:1 hydrochloric acid, 100 mL of distilled water, and a stirring rod. Heat to boiling, then remove from hot plate and allow to cool slightly.

6.2.5 Filter through an acid-washed Whatman No. 41 filter into a 400 mL beaker. Wash the filter paper six times with hot distilled water.

6.2.6 Add enough distilled water to make the beaker slightly more than half full. Place a stirring rod in the beaker and heat to boiling.

6.2.7 While stirring, add 5 mL of 20% barium chloride solution dropwise to the boiling sample. Continue stirring while boiling for five minutes.

6.2.8 Cover the beaker and place it on a warm hot plate. Allow to settle overnight.

6.2.9 To filter, decant the supernatant liquid through Whatman No. 40 paper. Wash the precipitate by decantation in the beaker with a 25 mL portion of hot distilled water. Then transfer the precipitate quantitatively to the filter paper and was six times with hot distilled water from a wash bottle, taking care not to allow the precipitate to "creep" over the top edge of the filter paper.

6.2.10 Remove the paper from the funnel and fold it to fit in the porcelain crucible. In the muffle, carefully burn off the paper with free access to air. After the paper is carbonized or burned off, ignite for 30 to 45 minutes in the closed muffle at 1450 ^{o}F to 1650 ^{o}F.

6.2.11 Remove the crucible from the muffle; set it on a pad to cool.

6.2.12 When the crucible is cool to the touch, weight it to the nearest milligram. Dump the contents, brush out any residue, and reweigh the crucible. Record both weights in grams.

6.2.13 Calculate the sulfate content as follows:

ppm sulfate = 41150 [(wt of crucible plus residue) - (wt of empty crucible)].

6.3 Reporting

6.3.1 Record the following data on acceptable forms:

- Identify location(s) where samples were taken
- Depth at which sample taken
- ppm sulfate in soil

MICHIGAN TEST METHOD
FOR
COMPRESSIVE PROPERTIES OF PREFABRICATED DRAINAGE SYSTEMS

1. Scope

1.1 This method describes a procedure for determining the compressive properties of prefabricated drainage systems.

1.2 Except as described herein, the testing shall be in conformance with Procedure A of ASTM D 1621. The section numbering conforms to the numbering in ASTM D 1621.

4. Compressive Strength

4.1 *Procedure A* - the stress at the yield point if a yield point occurs before 18% deformation (as in figure 1a). In the absence of such a yield point it is the stress at 18% deformation (as in figure 1b). Figures 1a and 1b can be found in ASTM D 1621.

5. Apparatus (Replaces portion of section 5.1 in Apparatus)

5.1 *Testing Machine* - A compression testing machine capable of operating at a constant rate of motion of the movable cross head shall be used. It must be capable of loading to 72.5 psi (500 kPa). Two fixed, parallel and aligned plates of 1.6 inches (40 mm) minimum thickness shall be used for the upper and lower loading platen.

6. Test Specimen (Replaces portion of sections 6.1 and 6.4 of Test Specimen)

6.1 The test specimen shall have 8.0 inches (208 mm) maximum length by the full product width, up to 18.0 inches (468 mm) maximum width. The specimen shall be cut equidistant from core support columns.

6.4 A minimum of 3 specimens shall be tested for each sample. Specimens that fail at some obvious flaw should be discarded and retests made, unless such flaws constitute a variable the effect of which it is desired to study.

7. Conditioning (Replaces portion of sections 7.1 and 7.2 of Conditioning)

7.1 *Conditioning* - Condition the test specimens at 73.4 BF V 3.6 BF (23 BC V 2 BC) for not less than 24 hours prior to test in accordance with procedure A of Methods D 618, for those tests where conditioning is required.

7.2 *Test Conditions* - Conduct test in the standard laboratory atmosphere of 73.4 BF V 3.6 BF (23 BC V 2 BC), unless otherwise specified.

8. Procedure A

(Cross head Motion) (Replaces portions of sections 8.2, 8.4, 8.4.1 of Procedure A)

8.2 Apply the load to the specimen in such a manner that it is distributed as uniformly as possible over the entire loading surface of the specimen. The rate of cross head movement shall be 0.5 inches (13 mm) per minute.

8.4 Continue until a yield point is reached or until the specimen has been compressed approximately 21% of its original thickness, whichever occurs first.

8.4.1 When specified, a deformation other than 18% may be used as the point at which stress shall be calculated. In such a case, compress the specimen approximately 3% more than the deformation specified. Substitute the specified deformation wherever "18% deformation" is cited in sections 10 and 11.

10. Calculation (Replaces portion of section 10.3 of Calculation, change values of x_1 and x_2, figure 1a and 1b)

10.3 Measure from point 0 along the zero load line a distance representing 18% deformation. At that point (Point M in figures 1a and 1b), draw a vertical line intersecting the load deflection or load-strain curve at Point P.

Figure 1a and 1b

X_1 = Procedure A: 18% core deformation
X_2 = Deflection (approximately 21%)

11. Report (Replaces Section 11.1.5, delete Section 11.1.6)

11.1.5 Average compressive strength.

MICHIGAN TEST METHOD
FOR
HYDRAULIC BURSTING STRENGTH OF NONWOVEN GEOTEXTILE FABRICS *c*
DIAPHRAGM BURSTING STRENGTH TESTER METHOD

1. Scope

1.1 This test method covers the determination of the resistance of nonwoven geotextile fabrics to bursting using the Hydraulic Diaphragm Bursting Tester.

1.2 Except as described herein, the testing shall be in conformance with ASTM D 3786. The paragraph numbering as follows corresponds to the paragraph numbering in D 3786-87.

8. Apparatus and Materials (Replaces portion of section 8.1 and 8.1.4 in Apparatus and Materials)

8.1 *Hydraulic Diaphragm Bursting Tester* - A motor driven tester that meets the requirements of 8.1.1 through 8.1.4 shall be used.

8.1.1.1 The upper and lower clamping surfaces shall have a circular opening at least 3.0 inches (76 mm) in diameter and coaxial apertures of 1.25 inches (32 mm) in diameter. The surfaces of the clamps between which the specimen is placed shall have concentric grooves spaced not less than 1/32 inches (.80 mm) apart and shall be of a depth not less than 1/1700 inches from the edge of the aperture. The surfaces of the clamps shall be metallic and any edge which might cause a cutting action shall be rounded to a radius of not more than 1/64 inches (.40 mm). The lower clamp shall be integral with the chamber in which a screw shall operate to force a liquid pressure medium at a uniform rate of 170 mL 5 mL/minute against the rubber diaphragm.

8.1.4 Hydraulic Pressure System - A means of applying controlled increasing hydrostatic pressure to the underside of the diaphragm until the specimen bursts through a fluid displaced at the rate of 6.7 inches 0.2 inches (175 mm 5 mm) per minute. The fluid is displaced by a piston in the pressure chamber of the apparatus. The recommended chamber fluid is USP chemically pure 96 percent glycerin. The hydraulic system, including the gages, shall be mounted so as to be free of externally induced vibrations. Means shall be provided at the instant of rupture of the specimen for stopping any further application of the loading pressure and for holding unchanged the contents of the pressure chamber until the total bursting pressure and the pressure required to inflate the diaphragm indicated on the gage have been recorded.

MICHIGAN TEST METHOD
FOR
THE MOISTURE-DENSITY RELATIONS OF RECYCLED MIXTURES
USING A 10.0 POUND (4.5 kg) RAMMER AND AN 18 INCH (457 mm) DROP

1. Scope

1.1 This test method is used to determine the relation between the moisture content and density of soils and soil mixtures containing recycled material compacted in a 4-inch (107 mm) mold using a 10.0 pound (4.5 kg) rammer dropped from a height of 18 inches (457 mm).

1.2 Except as described herein, the method will be in conformance with AASHTO T180, Method C. This modification is to conform with field practice utilizing all soil particle sizes passing a 1-inch (25.0 mm) sieve.

2. Modification

2.1 In Method C, change 0.75 inch (19.0 mm) to 1.0 inch (25.0 mm) to include the following sections: 2.7, 7.2, 8.4 and 13.1.4.

MICHIGAN TEST METHOD
FOR
TURN-OF-NUT

1. Scope

1.1 This method is used to verify the minimum preload tension force specified for bolts in pretensioned and slip-critical connections.

1.2 Subsection 906.07 of the Materials Acceptance Requirements Table located in the MDOT Materials Quality Assurance Procedures Manual requires all ASTM F 3125 Grade A 325 Type 1 high strength bolts (if size allows) to be tested.

2. Referenced Documents

2.1 Materials Quality Assurance Procedures Manual

2.2 ASTM F 3125

2.3 AASHTO LRFD Bridge Construction Specifications

2.4 RCSC Specification for Structural Joints Using ASTM A 325 or A 490 Bolts

3. Equipment

3.1 Skidmore-Wilhelm tension calibrator device (calibrated annually as recommended by AASHTO LRFD Bridge Construction Specifications)

3.2 Impact wrench

3.3 Felt tip pen

4. Testing

4.1 Attach appropriate fixtures to tension calibrator device and impact wrench. Place bolt in tension calibrator device with head held in place by fixture. Place washer under nut with manufacturer's markings facing outward. Use appropriate spacers so that nut is approximately even with end of bolt.

4.2 Using impact wrench or spud wrench tighten nut to bring bolt to snug tight condition (defined as 10,000 pounds).

4.3 Using felt tip pen mark base metal, nut and bolt (see Fig. 1) so that rotation can be identified. The base metal is marked in order to verify that the bolt did not rotate.

Figure 1. Typical turn-of-nut marking system.

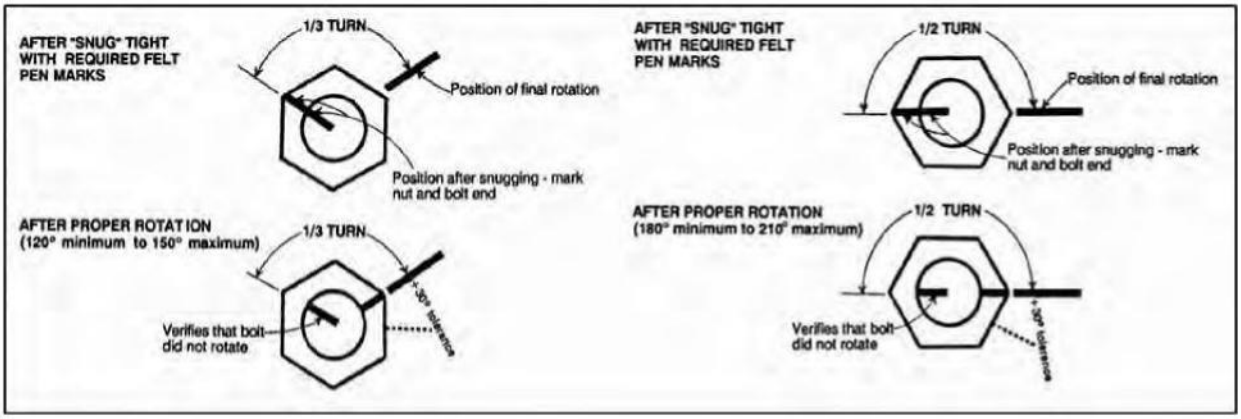

4.4 Using impact wrench turn nut as specified in Table 1 based on the bolt length. As seen in the table, the nut may be turned slightly more than required (30° or 45° depending upon bolt size) and the test will still be valid; however, the nut must not be turned less than the required rotation. Impact wrenches must be of adequate capacity and sufficiently supplied with air to perform the required tightening of each bolt in a maximum of 10 seconds. If tightening takes longer than 10 seconds then the galvanized coating may be damaged.

Table 1. Nut rotation from snug tight condition for turn-of-nut pretensioning.

Nut Rotation from Snug Tight Condition[a]	
Bolt Length[b]	**Both Faces Normal to Bolt Axis**
Not more than $4d_b$	120° + 30°
More than $4d_b$, but not more than $8d_b$	180° + 30°
More than $8d_b$, but not more than $12d_b$	240° + 45°
More than $12d_b$	The required nut rotation must be determined by actual testing in a suitable tension calibrator that simulates the conditions of solidly fitting steel.
Notes: a. Nut rotation is relative to bolt regardless of the element (nut or bolt) being turned. b. Nominal bolt length (d_b) is measured from underside of head to end of bolt.	

5. <u>Acceptance Criteria</u>

5.1 Tension achieved after rotation must meet requirements in Table 2.

Table 2. Minimum bolt pretension for pretensioned and slip-critical joints using ASTM F 3125 Grade A 325 bolts.

Nominal Bolt Diameter, d_b, (inch)	Specified Minimum Bolt Pretension (pounds)
5/8	19,200
3/4	28,400
7/8	39,250
1	51,500
1-1/8	56,450
1-1/4	71, 700

MICHIGAN TEST METHOD
FOR
EPOXY COATED DOWEL BARS FOR LOAD TRANSFER
IN CONCRETE PAVEMENT JOINTS

1. Scope

1.1 These test methods are intended for use in qualifying epoxy coatings for use on steel dowel bars used for load transfer in concrete pavement joints, to prevent corrosion of the dowel bars.

1.2 Procedures for determining coating thickness for lot-by-lot acceptance testing are also described herein.

1.3 The bars on which the coating is applied are separately described in the MDOT Standard Specifications.

1.4 The requirements for epoxy coatings are described in the MDOT Standard Specifications for Construction.

2. Referenced Documents

2.1 MDOT Standards:

Standard Specifications for Construction

2.2 AASHTO Standards:

M 6	Fine Aggregate for Portland Cement Concrete
M 80	Coarse Aggregate for Portland Cement Concrete
M 85	Specification for Portland Cement
T 253	Method for Testing Coated Dowel Bars

2.3 ASTM Standards:

A 123	Specification for Zinc Coatings on Iron and Steel Products
D 658	Test Method for Abrasion Resistance of Organic Coatings by the Air Blast Abrasion Test
D 1186	Method for Nondestructive Measurement of Dry Film Thickness of Nonmagnetic Coatings Applied to a Ferrous Base
E 376	Practice for Measuring Coating Thickness by Magnetic-Field or Eddy-Current (Electromagnetic) Test Methods
G 14	Test Method for Impact Resistance of Pipeline Coatings (Falling Weight Test)

2.4 ACI Standard:

211.1 - Practice for Selecting Proportions for Concrete

3. Materials

3.1 Coated Dowel Bars - All dowel bars used for evaluation testing shall have an epoxy coating thickness as specified, or as recommended by the supplier. The ends of the dowel bars shall be saw cut or sheared (by an approved process).

3.2 Concrete Mixture:

3.2.1 Materials and proportions for the concrete mixture used for encasing the dowel bars for the various tests shall be as follows:

Cement: AASHTO M 85
Fine Aggregate: AASHTO M 6 (MDOT 2NS)
Coarse Aggregate: AASHTO M 80, No. 57 (MDOT 6A)
Selecting Proportions: ACI 211.1-70
Cement Factor: 6 Sacks (335 kg per cubic meter)
Water-Cement Ratio, by Weight: 0.44 maximum
Air Content: 6-7 percent
Consistency: 2 inches 2 inch (50 mm 13 mm) slump

3.2.2 The concrete shall be placed into the molds and consolidated by vibration. Curing shall be at room temperature under wet burlap and/or polyethylene sheeting.

4. Corrosion and Pull-Out Resistance Test

4.1 Specimens - Saw cut 4 coated dowels to a length of 12 2 inches (320 mm). Coat two of the dowels with an approved bond breaker. Fit the dowels into a 6 x 6 x 12 2 inch (150 x 150 x 320 mm) mold, and support the ends of the dowels by placing in holes (equal to the diameter of the dowel) drilled in the center of 6 x 6 x 3 inch (150 x 150 x 6 mm) steel plates, which are placed inside the ends of the mold. Place a third similar steel plate, cut in half, at the center of the bar as a parting strip, and support in position by means of clips fastened to the mold. Fill the mold with concrete, consolidate and cure as described in Section 3.

4.2 Initial Pull-Out Resistance - After 24 hours 1 hour, remove the specimens from the

molds. Apply a tensile force to the concrete blocks, at a strain rate of 0.2 inches per minute (0.5 mm/minute), until a space of 2 inch (13 mm) between the 2 concrete blocks is obtained (3 inch [6 mm] movement).

4.2.1 Calculate the shear bond stress as the maximum force divided by the contact surface of one end of the bar.

Shear bond stress = Force/(it x diameter x length)

4.3 Corrosion Treatment -

4.3.1 Place the test specimens into moist storage and allow to cure to an age of 14 days, then place in room air and allow to dry at 75 F (24 C) for 14 days. After this drying period, place the specimens in water up to the level of the

dowel bar axis for 24 hours. After the 24 hour immersion, replace the water with a 4 percent (by weight) calcium chloride solution.

4.3.2 Subject the specimens to 50 cycles of freezing and thawing consisting of 16 hours exposure at -9 BF V 5 BF (-23 BC V 3 BC) and eight (or more) hours of thawing at room temperature. Replace the calcium chloride solution with fresh solution after every five cycles.

4.4 Final Pull-Out Resistance - At the end of the freeze-thaw cycling, apply a tensile force to the blocks, as in 4.2, until a space of 1 inch (25 mm) between the two concrete blocks is obtained (1/2 inch [13 mm] additional movement) and record the maximum force during this period.

4.4.1 Calculate the final pull-out resistance as in 4.2.1

4.5 Corrosion Examination - Continue the tensile force to the blocks until the dowel is completely removed from one concrete block. Saw or split the block and examine for evidence of corrosion staining at the dowel-concrete interface. Examine the dowel for corrosion, or tearing or perforation of the coating.

5. Deflection Test

5.1 Test Specimen - The specimen shall consist of two concrete end blocks and a concrete center block, connected by two coated dowel bars, generally as illustrated in Figure 1. Two test specimens are required for duplicate tests.

5.1.1 Support each dowel bar, 18 inches (460 mm) long, by means of a 1/4 inch (6 mm) thick steel plate in the end of the mold, having a hole in the center equal to the diameter of the bar, and a second similar steel plate, cut in half, at a distance 8 1/2 inches (220 mm) from the end support plate. Support the intermediate plates in true position normal to the axis of the bar by chips in the mold. The cross-section dimensions of the concrete shall be a minimum of 6 inch x 6 inch (150 mm x 150 mm).

5.1.2 Fill the mold with concrete, consolidate, and cure as described in 3.2.2. At 24 hours V 2 hours, remove the mold, including the 1/4 inch (6 mm) divider plates, and cure in a moist room to age of 14 days. If the gap between the end blocks and the center block increased to more than 5/16 inch (8 mm), apply force to the ends of the specimen so that each gap is between 1/4 inch and 5/16 inch (6 mm and 8 mm).

5.2 Load Test - At the end of the curing period, mount the specimen in a loading frame such as shown in Figure 2. Fasten the end blocks to prevent possibility of rotation during loading. Place a top loading member (steel beam or similar) with a length equal to the center concrete block length minus 4 inches (100 mm), centered on the center block. Thin padding may be used under the top loading member to compensate for surface irregularities in the concrete.

5.2.1 Apply a force of 4000 pounds (17,800 N) at a rate of approximately 2000 pounds per minute (8,900 N/minute) to the top loading member. Measure the deflection of the ends of the center block relative to each of the end blocks

under the 4000 pound (17,800 N) load to the nearest 0.001 inch (0.025 mm), as indicated in Figure 3.

6. Abrasion Resistance Test

6.1 Determine the resistance of dowel bar coatings to abrasion in accordance with ASTM D 658, modified to use sandblasting equipment such as a Uni-Blaster, Model SB4, produced by Industrial Products Division of Inland Manufacturing Company, Omaha, Nebraska. Use new silica sand passing a No. 20 (850 μm) sieve and retained on a No. 120 (125 μm) sieve. Apply air pressure of 100 psi (700 kPa) to the gun.

6.2 Direct a stream of sand at a spot on a coated dowel, normal to the dowel, from a sand blast gun equipped with a 0.1 inch (2.4 mm) jet and a $^{3}/_{16}$ inch (4.8 mm) nozzle. Clamp the gun in position so that there is 1 : inches (45 mm) between the gun nozzle and the dowel surface.

6.3 Determine the length of time for penetration of the coating and report it as the time of penetration per mil of coating. Use the average result of three penetrations as the test value. Run the test on at least two dowels.

7. Mar Resistance Test

7.1 Determine the ability of dowel coatings to withstand damage during transportation and handling by use of modified ASTM A 123 and ASTM G 14 procedures. Perform the modified test by placing a firmly supported coated dowel in a horizontal position and subjecting at least 5 areas to a blow from the rounded end of a 3 pound (1.4 kg) ball-peen hammer. Mount the modified hammer, pivoted at the end of the handle, to swing in a 12 inch (300 mm) radius, 90 degree arc, from vertical to horizontal. Strike the bar normal to its surface. Perform the test at 75 BF V 2 BF (24 BC V 1 BC) and on at least 2 coated dowels.

5. Chemical Resistance Test

8.1 Conduct the test as described in AASHTO T 253.

6. Coating Thickness Measurement

9.1 Measurements for coating thickness may be made by either of the procedures described in 9.2 or 9.3, except in case of dispute, the method in 9.2 shall be used.

9.2 Micrometer Method - Make measurements for coating thickness as follows. Measure (with a micrometer caliper) the diameter of the coated bar at 5 points in one plane through the axis of the bar, subtracting from each of these measurements the diameter of the bar in that plane as measured on an uncoated portion of the bar, and dividing the difference by 2 to provide the average thickness of 2 diametrically opposite points on the bar. Repeat the procedure in a plane at 90 degrees to the first measurements. Report the average of the 10 determinations, to the nearest 0.001 inch (0.025 mm), as the average coating thickness of the specimen, and also the minimum single thickness reading on 2 diametrically opposite points.

9.3 Magnetic Thickness Gage Method - Use a magnetic thickness gage as described in ASTM E 376 or D 1186. Standardize the magnetic thickness gage using foil or shims on the bare portion of a bar having size and type of steel similar to that on which the coating thickness is to be determined. Measure the thickness on a minimum of 12 points on 4 elements of the dowel bar spaced at 90 degrees to each other, with an equal number of points on each element. Report the average value and the minimum thickness, to 0.001 inch (0.025 mm).

10. Report

10.1 Include the following information in the report:

10.1.1 Identification of sample (producer, type of coating, nominal thickness, nominal diameter of dowel bars on which it is applied).

10.2 For the corrosion and pull-out resistance test:

10.2.1 The maximum shear bond stress for initial movement;

10.2.2 The maximum shear bond stress for final movement (after 50 cycles of freezing and thawing); and

10.2.3 Evidence of corrosion of the dowel bar or disruption of the coating.

10.3 For the load deflection test, the relative deflection under load for each joint gap and the average of the measurements.

10.4 For the abrasion resistance test, the individual and average time of penetration per mil of coating for each dowel bar.

10.5 For the mar resistance test, report number of impact areas that show rupture or fracture of the coating and that show flaking-off of the coating.

10.6 For the chemical resistance test, evidence of blistering, softening, disbonding, development of holidays, or undercutting from drilled holes with any of the solutions or distilled water.

10.7 For coating thickness, report the average coating thickness and also the minimum coating thickness, along with the procedure used.

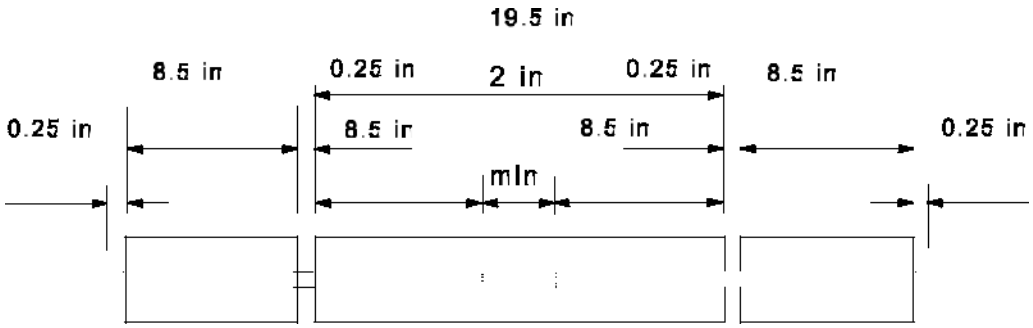

Figure 1: Specimen

Figure 2: Loading Frame

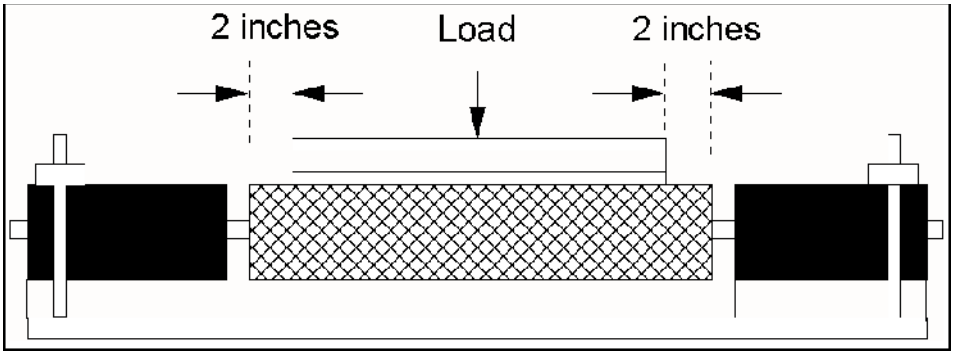

MICHIGAN TEST METHOD
FOR
DETERMINATION OF CHLORIDE ION CONTENT IN HARDENED CONCRETE

1. Scope

1.1 This method describes a procedure for determining the amount of chloride ion in pulverized samples of hardened concrete, due to inclusion of calcium chloride as a set accelerator or permeation of sodium chloride or calcium chloride used for snow and ice removal. The results are reported in pounds (kilograms) of chloride ion per cubic yard (meter) of concrete.

1.2 The results of the tests aid in determining how much concrete should be removed prior to bridge deck resurfacing.

2. Applicable Documents

2.1 AASHTO Standards:

T 260 Sampling and Testing for Total Chloride Ion in Concrete and Concrete Raw Materials

3. Summary of Method

3.1 Samples obtained by field personnel consist of cores or powdered samples. If cores, slices are taken at the desired depth(s) from the surface and pulverized so that all material passes a 300 μm sieve. Powdered samples are obtained using a rotary impact drill, with companion samples taken at the level of the upper reinforcing steel in bridge decks, and immediately below the level of the upper reinforcement. Detailed sampling procedures are included in AASHTO T 260.

3.2 A weighed sample is digested with nitric acid, filtered, and the chloride ion is precipitated with excess silver nitrate. The excess silver ion is titrated with potassium thiocyanate. The concentration of chloride ion is then calculated.

4. Equipment, Supplies, and Reagents

4.1 Equipment:

- Convection oven, capable of maintaining a temperature of approximately 230 F (110 C)
- Electric hot plate, capable of a heating surface temperature up to 390 F (200 C)
- Balance, accurate to 0.0001 gram, capacity of 100 grams
- Magnetic stirrer and Teflon stirring bars
- Buret, with 0.1 mL graduations

4.2 Supplies:

- Graduated beakers, 250 mL and 600 mL with watch glasses
- Funnels, 100 mm diameter
- Filter paper, Whatman No. 1, 185 mm diameter
- Pipets

4.3 Reagents:

- Distilled water
- Concentrated nitric acid, HNO_3 (Reagent 69-71%)
- Benzyl alcohol
- Ferric nitrate, $Fe(NO_3)_3$ indicator solution (40g/L)
- Standardized silver nitrate $AgNO_3$, 0.05N
- Standardized potassium thiocyanate, KSCN, 0.05N

5. Sample Preparation

5.1 Place the powder or pulverized samples in the oven (in specimen cans, uncovered), and dry overnight at a temperature of approximately 230 F (110 C).

5.2 Cover the samples and allow to cool to room temperature.

6. Procedure

6.1 Extraction:

6.1.1 Weigh out a 4.0000 0.0020 gram sample into a 250 mL graduated beaker. Add hot distilled water to the sample and swirl the beaker to form a slurry. Dilute the slurry by adding additional distilled water to the 125 mL graduation on the beaker.

6.1.2 SLOWLY add 15 mL of concentrated HNO_3 while constantly stirring. Cover with a watch glass and digest on the hot plate, below boiling, for 15 minutes. Raise the temperature to approximately 347 F (175 C) until the samples start to boil, with the watch glass in place.

6.1.3 Remove sample from the hot plate and allow to cool to room temperature. Filter the sample through the filter paper into a 600 mL beaker. Filtering should be started as soon as the sample reaches room temperature. Rinse the filter with warm distilled or deionized water.

6.2 Titration:

6.2.1 Using a pipet or dispensing pipet, add 3.00 mL of the $AgNO_3$ to the filtrate in the 600 mL beaker. Mix vigorously using a magnetic stirrer until precipitation is complete. Add 3 to 5 mL of benzyl alcohol using a dropping pipet.

6.2.2 Add $Fe(NO_3)_3$ indicator (1 mL per 100 mL of solution) and titrate the solution with KSCN to a faint pink endpoint that persists for at least 4 seconds. If the end point appears immediately upon the addition of KSCN, add an additional 3.00 mL of $AgNO_3$ and continue titration to the faint pink endpoint.

6.3 Quality control

6.3.1 With each batch of samples, a method blank, standard solution, sample spike and sample repeat are analyzed.

6.3.2 Recoveries for the standard solution should be 90% to 110% of the known value. Sample spike recovery should be 85% to 115% of the spike value and repeats should not differ by more than 15%.

6.3.3 If values fall outside these ranges, corrective action should be taken and the batch repeated.

7. Calculations

7.1 Calculate the concentration of chloride ion in the concrete using the appropriate formula below. For chloride ion per cubic yard of concrete, the following unit weights of concrete shall be used when the true weight is not known: for concrete containing natural aggregates, 144 pounds per cubic foot (2310 kilograms per cubic meter); for concrete containing blast furnace slag aggregate, 134 pounds per cubic foot (2150 kilograms per cubic meter).

Chloride as NaCl, lb/yd; of concrete = 0.04973D $\frac{A - K}{W}$

(Chloride as NaCl, kg/m^3 of concrete = 0.07895D $\frac{A - K}{W}$)

where:

A = quantity of $AgNO_3$ used, mL

K = quantify of KSCN used, mL

W = weight of sample, g

D = unit weight [of concrete or aggregate], lb/ft; (kg/m;)

For gravel, D = 0.8710 lb/ft; (13.952 kg/m;)

For slag, D = 0.8110 lb/ft; (12.991 kg/m;)

8. Report

8.1 Report the test results for each test sample together with appropriate data on location from which the sample was taken, as reported on the sample identification.

8.2 Report the results to the nearest 0.1 lb/yd; (kg/m;).

MICHIGAN TEST METHOD
FOR
DETERMINING THE AMOUNT OF ZINC AND CLEAR COAT
ON A FENCE POST WITH A MULTI-COATED SYSTEM

1. Scope

1.1 This method applies to the testing of coating systems for multi-coated fence posts (pipe sections only) for compliance to specifications.

1.2 The multi-coated system consists of 0.9 ounces per square foot (0.275 kg/m^5) of zinc applied to both the interior and the exterior of the post according to ASTM A 123 (Hot-Dipped). On top of the zinc on the exterior, a clear coat system shall be applied. The clear coat shall have a minimum thickness of 0.3 mil (7.6 micrometers).

2. Referenced Documents

2.1 MDOT Standard Specifications for Construction.

2.2 MDOT Special Provision, Posts for Fence and Gates - Zinc Coating.

2.3 ASTM A 123 - Specification for Zinc (Hot-Dip Galvanized) Coatings on Iron and Steel Products.

3. Equipment

3.1 Positector, for measuring coating thickness.

3.2 Saw, for cutting pipe sections.

3.3 Compression Testing Machine, for flattening cut pipe sections.

4. Sampling

4.1 From the post received for testing randomly select two 6 inch (150 mm) long sections and cut them out.

5. Sample Preparation

5.1 Cut the two 6 inch (150 mm) specimens longitudinally into halves exposing the interior surfaces.

5.2 Flatten all four 6 inch (150 mm) specimens using a Compression Testing Machine (machine). Specimens should be placed in the machine with the outside diameter of the pipe facing up. The head of the machine should be carefully lowered until it is in contact with the specimen. Both the head of the machine and the surface which the specimen is on should be level. Once in contact, the specimen should be flattened with the load being applied at a rate of approximately 225 lbf/second (4.4 kN/sec) until it is completely flat. Caution should be taken to avoid extensive damage to the clear

coat. It is not acceptable to flatten the specimens by pounding on them with a hammer. Lubricant can be used if needed.

6. Testing

6.1 Visually examine the remaining length of post (minus the two 6 inch [150 mm] specimens that have been cut out) for the existence of clear coat. With a knife scrape a few random areas, if the clear coat exists it should come off with scraping. Record observations.

6.2 Visually examine the interior and exterior coating on the post by looking at each of the flattened 6 inch (150 mm) specimens. Hot-dip galvanizing should be visually apparent on the interior and the exterior of the pipe. Record observations.

6.3 Using a positector, measure six randomly selected spots on the interior side of each flattened 6 inch (150 mm) specimen. Measurements should not be taken within 3 inch (6 mm) of any cut edge. Record all of the measurements taken.

6.4 Using a positector measure six randomly selected spots on the exterior side of each flattened 6 inch (150 mm) specimen. Measurements should not be taken within 3 inch (6 mm) of any cut edge. Record all of the measurements taken.

7. Computations

7.1 Average the six interior measurements for each of the flattened 6 inch (150 mm) specimens. Perform the same calculation for the exterior measurements.

7.2 For each of the flattened 6 inch (150 mm) specimens subtract the interior average from the exterior average.

8. Acceptance Criteria

8.1 The sample must have clear coat on the exterior and be Hot-Dipped galvanized on both the interior and the exterior.

8.2 The averaged positector reading for the interior of the post for each flattened specimen shall be greater than or equal to 1.5 mils (39 micrometers). For each flattened specimen no more than three of the six measurements shall fall below 1.5 mils (39 micrometers).

8.3 The averaged positector reading for the exterior of the post for each flattened specimen shall be greater than or equal to 1.8 mils (46 micrometers). For each flattened specimen no more than three of the six measurements shall fall below 1.8 mils (46 micrometers).

8.4 For each of the flattened specimens the averaged exterior and interior difference shall be greater than or equal to 0.3 mil (7.6 micrometers). This is the average thickness of the clear coat.

MICHIGAN TEST METHOD
FOR
BOND RELEASE AGENTS
FOR EPOXY COATED DOWEL BARS

1. Scope

1.1 This test method is intended for use in qualifying bond release agents for use on epoxy coated steel dowel bars used for load transfer in concrete pavement joints.

1.2 The steel dowel bars and epoxy coating are separately described in the MDOT Standard Specifications for Construction.

2. Referenced Documents

2.1 MDOT Standards –

Standard Specifications for Construction

2.2 ACI Standards –

211.1 - Practice for Selecting Proportions for Concrete

3. Materials

3.1 Coated Dowel Bars – All dowel bars used for evaluation shall meet requirements for dimensions, steel grade, and epoxy coating. The ends of the dowel bars shall be saw cut and deburred.

3.2 Bond Release Agent – The bond release agent being evaluated shall be applied in a manner and to a thickness typical with the manufacturer's standard production process.

3.3 Test Molds – Standard 6 inch diameter by 12 inch long concrete cylinder testing molds shall be used. A system of braces and spacers is required to ensure that the dowel is plumb, centered, and placed at the correct depth in the mold.

3.4 Concrete Mixture –

3.4.1 Material specifications and proportions for the concrete mixture used for encasing the dowel bars for the pull-out shear bond stress tests shall be as follows:

Cement: AASHTO M85
Fine Aggregate: AASHTO M6 (MDOT 2NS)
Coarse Aggregate: AASHTO M80, No. 57 (MDOT 6A)
Selecting Proportions: ACI 211.1
Cement Factor: 6 sacks
Water-Cement Ratio, by Weight: 0.44 maximum

Air Content: 6-7 percent
Consistency: 2 inches ± $^1/_2$ inches slump

3.4.2 The concrete shall be placed into the molds and consolidated by vibration. Curing shall be at room temperature under wet burlap and/or polyethylene sheeting.

4. Pull-Out Shear Bond Stress Test

4.1 Specimens –

4.1.1 Label, measure, and record (to 0.05 inches) the lengths of five 1-1/4 inch diameter by 18 inch long dowels. Measure (average four readings to 0.01 inches) and record the dowel diameters.

4.1.2 Apply the bond release agent at the manufacturer's recommended application rate for a length of 10 inches from one end of the dowels. Dowels with the release agent pre-applied by the manufacturer may be used.

4.1.3 Fit the dowels into the cylinder molds such that 9 inches ± $^1/_4$ inches of the bond release coated end will be embedded in concrete (see Figure 1). Ensure that the dowels remain centered, plumb, and clearances are maintained.

4.1.4 Implement a method that will allow the cured cylinder to be mounted to the crosshead of a universal testing machine. Figure 1 shows one option.

4.1.5 Fill the molds with concrete, consolidate, and cure as described in Section 3.4.2.

4.2 Pull-Out Resistance –

4.2.1 After 72 hours ± 2 hours, remove the specimens from the molds.

4.2.2 Measure the length (to 0.05 inches) of the portion of each dowel not embedded in concrete. Subtract this distance from the total dowel length and record the result as length of embedment.

4.2.3 Attach necessary mounting hardware as described in Section 4.1.4. Mount the specimen in a universal testing machine.

4.2.4 Apply a tensile force at a strain rate of 0.2 inches per minute for five minutes to achieve a one inch pull-out of the dowel from the concrete. Record the maximum achieved tensile force in pounds.

4.2.5 Calculate the shear bond stress as the force divided by the embedded surface contact area of the dowel.

Shear bond stress = Force / (π x diameter x embedment

length). 4.2.6 Record the calculated shear bond stress.

5. Report

5.1 Complete and submit the Physical Requirements for Bond Release Agents form in the Qualification Procedure for Bond Release Agents for Epoxy Coated Dowel Bars.

Figure 1: Specimen

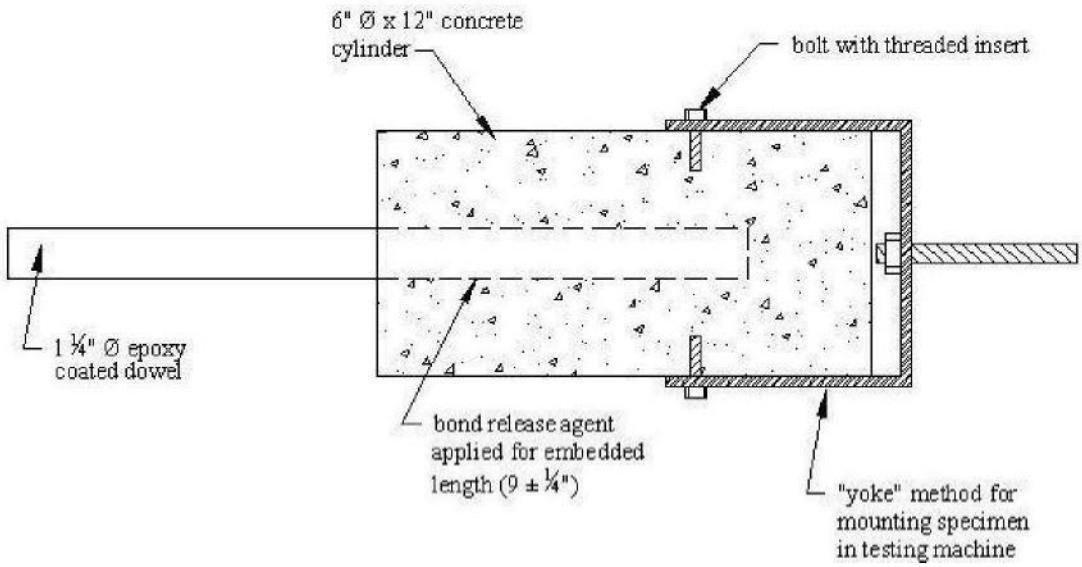

MICHIGAN TEST METHOD
FOR
WIPING CLOTHS FOR LABORATORY AND GENERAL USE

1. Scope

1.1 This method covers the determination of acceptability of both "white" wiping cloths for laboratory use and "mixed color" cloths for general use.

2. Applicable Documents

2.1 Michigan 4480-S2, September 1986, State of Michigan, Department of Management and Budget Purchasing Office, Specifications for White Wiping Cloths.

2.2 Michigan 4480-S1, November 12, 1982, State of Michigan, Department of Management and Budget Purchasing Office, Specifications for "Mixed Color" Wiping Cloths.

3. Summary of Method

3.1 The test procedure involves the determination of specification adherence as to size, weight, color, absorption, and a visual inspection for deficiencies.

4. Significance

4.1 This procedure provides a means of ensuring quality wiping cloths from the suppliers and is necessarily highly subject to the tester's judgment. His judgment is the determining factor regarding the final acceptance or rejection.

5. Apparatus

5.1 Balance accurate to 0.1 g.

6. Procedure

6.1 Weigh the container and sample together noting the total weight, and then remove the cloths from the container and weigh the container. The difference in weight will give the net weight of the sample which is recorded on the work sheet (Figure 1).

6.2 *Size* - Divide the sample into four categories based on the size of the individual cloths.

The four categories are:

- larger than 9 square feet (0.8 m^5).

- 18 x 18 inches (457 x 457 mm) or larger, but less than 9 square feet (0.8 m^5).

- less than 18 x 18 inches (457 x 457 mm), but larger than 12 x 12 inches (305 x 305 mm).

- less than 12 x 12 inches (305 x 305 mm).

Weigh the cloths in each of the categories and determine the percent by weight in each category to the nearest whole percent and record on work sheet.

6.3 *Weight* -

6.3.1 Sort through the entire sample and separate out two groups of material - one group that appears unusually light and another group that appears unusually heavy.

NOTE 1: After some experience, a technician will be able to judge the acceptable weight of cloths by "feel" and as a result the two groups of unusually light and usually heavy cloths may be quite small. An inexperienced technician may not feel as sure of himself and may have a larger number of cloths that he feels are not within tolerable limits. However, if he has to separate the entire sample into the two groups this will in no wise affect the final test results.

6.3.2 Cut out a measured square piece of cloth (at least 12 x 12 inches [305 x 305 mm]) from each piece in the "unusually light" group, and weigh on a balance to determine the weight per square yard (m^5). Record the percent by weight that is less than 3 ounces per square yard (100 g per m^5) on the work sheet (Figure 1).

6.3.3 Similarly cut out a measured square piece of cloth from each piece in the "unusually heavy" group, and weigh on a balance to determine the weight per square yard (m^5). Record the percent by weight that is greater than 7 ounces per square yard (235 g per m^5) on the work sheet. **If no material exceeds these bounds, the material passes the weight requirement**.

6.4 *Color* -

6.4.1 If the wiping cloths are "mixed color," separate into two groups - the light from the dark cloths. Determine the percentage by weight of light colored and record on work sheet.

6.4.2 If the wiping cloths are "white" wiping cloths for laboratory use, similarly determine the percentage of white cloths (which should be 100 percent) and record on work sheet.

6.5 *Absorption* -

6.5.1 Determine the absorption of "white" and "mixed color" wiping cloths by laying the material on a flat wooden surface and applying one drop of water with an eye-dropper. If the water spreads or fans out into the surrounding fabric within 10 seconds to a diameter of ^{2} inch (13 mm), the cloth shall be considered absorptive. If the water is not absorbed, but rolls on top of the cloth, or passes through the mesh of the cloth shall be considered non-absorptive. Weigh the cloths that are non-absorptive and record the percentage on the work sheet.

6.6 *Visual Deficiencies* -

6.6.1 Visually inspect the wiping cloths for cleanliness, stains, buttons and other attachments.

NOTE 2: Dyes may not be used to remove stains.

6.6.2 Generally determine if the cloths are free of materials such as: cuffs, collars, pockets, ruffles, elastic and heavy seams. Other deficiencies include stiff fronts, bathrobes, bedspreads, duck, tapestry, curtain material, ticking, poplin, sateen, drapery, rayons, and lustrous fabrics of all descriptions. Cloths which are deficient in any respect will be considered unsatisfactory.

FIGURE 1

WIPING CLOTHS - WORK SHEET

PRODUCER _____ _____

Mixed _____ ColorsWhite _____

Laboratory Number Date Received

P.O. Number _____ Date Reported

TEST	SPEC. MIN.	REQ. MAX.	RESULTS	TESTED BY	REMARKS
Size (by weight) %					
Larger than 9 square feet (0.8 m5)		0			
Smaller than 9 square feet (0.8 m5), but larger than 12 x 18 inches (305 x 457 mm)	100				
Smaller than 12 x 18 inches (305 x 457 mm)		0			
Weight %					
Less than 3 ounces per square yard (100 g/m5)		0			
More than 7 ounces per square yard (235 g/m5)		0			
Color (by weight) %					
White, no print (white)	100				
Light in color (mixed)	70				
Absorption (by weight) %					
Non-Absorptive					
(Water)		0			
General Requirements					
Quality, Texture Cleanliness, etc.	Pass	Pass			

REMARKS:

cc: File

MICHIGAN TEST METHOD
FOR
MINIMUM SOIL RESISTIVITY

1. Scope

1.1 This method covers the procedure for determining the minimum resistivity of a soil. These values are used to establish the aggressiveness of the proposed site. The minimum value is obtained through an incremental addition of distilled water to a selected soil sample. After each increment, the soil resistivity is measured in a soil box.

2. Summary of Method

2.1 Assumptions

2.1.1 The sampled soil as obtained in its natural state exists at or above its minimum resistivity.

2.1.2 As more distilled water is added to the sample, more salts will be dissolved and result in a lower resistivity.

2.1.3 The addition of distilled water after all the salts have been dissolved will cause an increase in the resistivity.

2.1.4 Minimum resistivity = $\frac{\text{Box Factor}}{\text{Conductivity Reading}}$

2.2 Applications

2.2.1 Soil

2.3 Terminology

2.3.1 Box Factor - Standard value for each soil box - arrived at by dividing the surface area of the electrodes in cm^2 by the distance between the electrodes.

2.3.2 Soil Box - A fabricated box containing two opposed stainless steel electrodes and calibrated for measuring resistivity.

2.4 Significance

2.4.1 Advantage - Soil moisture content is a controlling factor in resistivity measurements. In place resistivity measurements are then subject to the natural moisture content at the time of measurement and, therefore, does not necessarily represent the most aggressive condition attainable by the soil. Minimum resistivity represents a base level of the lowest possible resistivity attainable by an increase in moisture.

2.4.2 Interferences -

Stones larger, than the openings in a No. 8 (2.36 mm) sieve.

Air voids in the soil as compacted into the soil box.

Soil not level with the top of the soil box.

Ice on the electrodes

Box contaminated by a previous soil.

2.4.3 Limitations - The quantity of water added in each increment is a function of the soil type. The basic procedure is for a granular soil. Cohesive and organic soils will allow a somewhat larger addition. Experience is the best aid in estimating these quantities. These quantities can be adjusted as the test progresses. As the minimum value is approached, the quantity should be reduced. The test shall be considered complete when the resistivity value increases for three consecutive frames.

3. Applicable Documents

3.1 Apparatus

- Conductivity instrument with leads suitable for soil box measurements.
- Soils box calibrated for use with the conductivity meter (see Figure 1).
- No. 8 (2.36 mm) sieve
- Pail
- Spoon
- Spatula
- Graduate cylinder
- Table top
- Tripod short leg
- Scrub brush
- Rubber gloves
- Apron
- One liter Nalgene bottle
- One squirter bottle
- Calculator

3.2 Materials

- Distilled water
- Rags
- Notebook

5. Selection and Preparation of Sample

5.1 Thoroughly mix the soil sample selected by in place resistivity.

5.2 Classify and record soil type.

5.3 Select approximately 1,300 grams of soil passing the No. 8 (2.36 mm) sieve.

6. Test Procedure

6.1 Test Steps

6.1.1 Place the soil in the soil box and compact it (moderate compaction with the fingers is sufficient).

6.1.2 Strike off excess soil with spatula.

6.1.3 Connect the leads from the conductivity meter to the two terminals on the box.

6.1.4 Measure the conductivity and record.

6.1.5 Remove the soil from the box.

6.1.6 Add 50 mL of distilled water to the soil and thoroughly mix.

6.1.7 Place contents back into soil box, compact and again measure the conductivity.

6.1.8 Repeat the procedure until a minimum value has been established.

6.1.9 Record the minimum value as the resistivity of the soil.

6.2 Precautions

6.2.1 Make sure a good contact between the meter and soil box is obtained through the leads.

6.2.2 Thoroughly clean all equipment that comes in direct contact with the soil before and after testing.

7. Calculations

$$P = \frac{\text{Box Factor}}{\text{Conductivity Reading}}$$

where: P equals the soil resistivity in ohm cms.
Box factor in centimeters is given for each box.
Conductivity reading in mohs per centimeter.

8. Precision and Accuracy

8.1 Data Recording

8.1.1 Record all conductivity measurements to the nearest micro mho.

8.1.2 Record resistivity values to the nearest ohm cm.

9. Report

9.1 Presentation of Data

9.1.1 Form - All raw data and readings along with the final minimum resistivity will be entered on attached form.

The resistivity values are plotted on the back of the form. Percent moisture on the X axis and resistivity on the Y axis.

MINIMUM RESISTIVITY TEST

Laboratory Number **Tested By _**
Soil Type _____ **Checked By**
Date Tested

Specific Resistivity of Distilled Water
Weight of Dry Sample _____
Box Factor

Water Added	Percent	Reading	Resistivity

MICHIGAN TEST METHOD
FOR
PLASTIC TRAFFIC CONES

1. Scope

1.1 These testing procedures cover departmental tests used to determine the acceptability of polyvinyl chloride traffic cones for use as an aid in traffic control.

2. Applicable Documents

2.1 The following ASTM specifications are used in testing the cones:

ASTM D 412 Tension Testing of Vulcanized Rubber
ASTM D 2240 Indentation Hardness of Rubber and Plastics by Means of a Durometer

3. Summary of Method

3.1 The test procedures cover tests used to determine the physical dimensions and properties of the molded cones.

4. Significance

4.1 These tests are conducted to insure that the cone will have the flexibility and stability required to insure its usefulness as a traffic controlling device.

5. Procedure

5.1 Physical Dimensions and Weights - All dimensional measurements shall be made using a suitable device capable of measuring to the nearest 0.01 inch (0.3 mm). All weights shall be determined on a suitable device capable of weighing to the nearest 0.10 pound (0.05 kg).

5.2 Bond Strength Test - Three reduced-section specimens shall be prepared from the cone. The reduced section at the joint between the base and conical section shall be neatly trimmed to 1 inch (25 mm) in width and the area at this point calculated for each specimen. The load required to cause failure will be determined on a suitable testing machine of a cross-head speed of 5 inches V 1 inch (125 mm V 25 mm) per minute.

5.3 Low Temperature Resistance - The cone shall be conditioned a minimum of two hours at -9 BF V 3 BF (-23 BC V 2 BC) in a cold box. A steel ball weighing 0.2 pounds V 0.1 pound (.09 kg V 0.05 kg) shall be dropped a distance of 60 inches (1.5 meters) through a vertical tube to impact the conical surface of the cone. The cone shall be positioned so that the conical surface is in a horizontal plane. The cone shall be subjected to three impact tests spaced at least 6 inches (150 mm) apart. Fracturing, cracking, or splitting of the conical section of the cone shall constitute failure of the test.

5.4 Heat Resistance - The cone shall not exhibit any slump when conditioned in an upright position for 4 hours at 150 BF V 3 BF (66 BC V 2 BC).

5.5 Specimen Conditioning - Unless otherwise stated the cones shall be conditioned at least 48 hours at standard laboratory condition prior to the commencement of testing.

6. Report

6.1 The report shall list the test results for the tests conducted as follows:

- Total Height, inch (mm)
- Square Base, inch (mm)
- Inside Diameter at Base, inch (mm)
- Inside Diameter at Top, inch (mm)
- Inside Diameter (2 inch (13 mm)from Top), inch (mm)
- Wall Thickness, Conical Section, Top, inch (mm) min.
- Wall Thickness, Conical Section, Bottom inch (mm) min.
- Weight, Total, pound (kg), min.
- Weight, Base, pound (kg), min.
- Hardness, Shore A (Conical Section)
- Tensile Strength, psi (kPa), min.
- Elongation @ Rupture, %, min.
- Tensile Stress @ 200% Elongation, psi (kPa), min.
- Tensile Strength of Bond Between Base and Conical Section, psi (kPa), min.
- Low Temperature Resistance
- Heat Resistance

MICHIGAN TEST METHOD
FOR
GLASS BEADS FOR PAVEMENT MARKING

1. Scope

1.1 This standard covers five procedures for testing glass beads used in pavement marking paint, including: (1) Gradation, (2) Imperfect Particles, (3) Index of Refraction, (4) Chemical Stability, and (5) Color.

2. Applicable Documents

2.1 ASTM Standards:

C 702 Reducing Field Samples of Aggregate to Testing Size

D 1214 Sieve Analysis for Glass Spheres

E 11 Wire Cloth Sieves for Testing Purposes

3. Summary of Methods

3.1 *Gradation* - This test is conducted according to ASTM D 1214 with certain modifications and using No. 20 (850 jtm), No. 30 (600 jtm), No. 40 (425 jtm), No. 50 (300 jtm), No. 80 (180 jtm), and No. 100 (150 jtm) sieves.

3.2 *Imperfect Particles* - Beads are inspected under a microscope for irregularly shaped particles and other imperfections using No. 30 to No. 40 (600 jtm to 425 jtm), No. 40 to No. 50 (425 jtm to 300 jtm), No. 50 to No. 80 (300 jtm to 180 jtm), and No. 80 to No. 100 (180 jtm to 150 jtm) size range.

3.3 *Index of Refraction* - The glass beads are placed in index of refraction oils and viewed through a polarizing microscope lens to determine index of refraction.

3.4 *Chemical Stability* - The beads are boiled in water to determine the degree of alkalinity.

3.5 *Color* - Beads are checked for color by comparing them with four vials of beads of desired and acceptable standards.

4. Field Sampling

4.1 Sample each shipment at the delivery point. Select a number of bags at random, equivalent to the cube root of the total bags in shipment. The following table shows the number of bags to be selected from shipments of various sizes.

Number of Bags in Shipment	Number of Bags to be Sampled
2-8	2
9-27	3
28-64	4
65-125	5
126-216	6
217-343	7
344-512	8
513-729	9
730-1000	10
1001-1331	11
(etc.)	(etc.)

4.2 Mix the contents of each of the bags selected by rolling them through at least two revolutions to reduce segregation of sizes within the bag.

4.3 Lay one of the selected bags on a board, open the bag's self-seal closure and insert a sampling thief diagonally through the beads until the tube contacts the diagonally opposite corner of the bag, sealing further entry of beads into the tube. A piece of thin-walled tubing, 1.0 to 1.25 inch (25 to 32 mm) in diameter and about 36 inches (915 mm), makes a satisfactory sample thief. Seal the bag closure about the tube and tilt the board with the bag of beads, allowing the sample to flow out of the tube into a container. About 1.0 to 1.25 pounds (450 to 570 g) of beads are collected in this manner.

4.4 Repeat the operation described above until all of the selected bags have been sampled. Consolidate the samples representing a single shipment into one container and forward a minimum of 4.5 pounds (2 kg) of beads to the Laboratory for testing. If the number of bags sampled results in an excessively large sample, the size may be reduced by use of a riffle sample splitter.

5. <u>Method for Determining Gradation</u>

5.1 *Apparatus*:

- Balance, accurate and sensitive to 0.05g with a minimum capacity of 160 g.

- Sieves, 203 mm diameter, conforming to ASTM Specification E 11, and using No. 20 (850 jtm), No. 30 (600 jtm), No. 40 (425 jtm), No. 50 (300 jtm), No. 80 (180 jtm), and No.100 (150 jtm) sieves.

- Drying oven capable of maintaining a temperature of 110 ^{o}C 5

^{o}C. - Riffle sample splitter conforming to ASTM C 702.

5.2 *Procedure*:

5.2.1 Split the sample to approximately 100g using a sample splitter. Dry the sample to substantially constant weight at a temperature of 110 ^{o}C 5 ^{o}C in drying oven.

5.2.2 Weigh the test sample of dried glass beads to the nearest 0.1 g and place on the sieve with the largest opening in the series specified for the test. Hold the sieve, with pan and cover attached, in one hand in a slightly inclined position so that the sample will be well distributed over the sieve, at the same time gently striking the side about 150 times per minute against the palm of the other hand on the upstroke. Turn the sieve every 25 strokes about one-sixth of a revolution in the same direction. Continue the operation until not more than 0.1 g passes through the sieve in 1 minute of continuous sieving. Each time, before weighing the material passing through the sieve, tap the side of the sieve with the brush handle in order to remove any material adhering to the wire cloth.

5.2.3 When the sieving has been finished, carefully remove the residue remaining on the sieve to a tared container. Invert the sieve over a pan and clean the wire cloth by brushing the underside. Add the material thus removed from the wire cloth to the residue removed from the sieve.

5.2.4 Weigh the portion of the sample retained on the sieve to the nearest 0.1 g and record on worksheet (See Figure 1). Place each fraction retained in a properly marked container. Place the material passing through the largest sieve on the sieve with the next smaller opening for the series selected for the sieve analysis. Continue sieving in a similar manner, using successively each of the sieves in the order of decreasing size of opening, and recording the weight retained on each sieve. Calculate the percent retained on each sieve and the percentage of the sample passing each of the sieves, and record on worksheet. Report results for No. 20 (850 jtm), No. 30 (600 jtm), No. 50 (300 jtm), and No. 100 (150 jtm) sieves for compliance with specification limits.

6. <u>Method for Imperfects Determination</u>

6.1 *Apparatus*:

6.1.1 Sieves No. 30 (600 jtm), No. 40 (425 jtm), No. 50 (300 jtm), No. 80 (180 jtm), and No. 100 (150 jtm).

6.1.2 Transparent double-stick tape.

6.1.3 4 inch X 4 inch (102 mm x 102 mm) glass plates.

6.1.4 Stereo-Microscope - 7 to 30 power.

6.2 *Procedure*:

6.2.1 Record the weight retained of each fraction on the worksheet from the gradation test, and determine the percent retained for each of the four fractions considering only material between the No. 30 (600 jtm) and No. 100 (150 jtm) sieves (See Figure 1). Pass the beads retained from the gradation test, of the given size range (No. 30 - No. 40 [600 - 425 jtm], No. 40 - No. 50 [425 - 300 jtm], No. 50 - No. 80 [300 - 180 jtm], and No. 80 - No. 100 [180 - 150 jtm]) through the larger sized sieve of the range with a piece of double-stick transparent tape adhering to the underside of the sieve, and a pan to collect the beads not adhering to the tape. The sieve openings will locate the beads in neat rows and columns on the tape.

6.2.2 Remove the tape from the sieve and stick it on a 4 x 4 inch (102 x 102 mm) glass plate. With the plate back lighted under a stereo-microscope, isolate five groups of 40 beads each (5 rows of 8 beads per group) in different areas of the tape. This is accomplished by scraping away the beads immediately adjacent to each group of 40 beads.

6.2.3 Defective or imperfect beads are counted from each group of 40 and the number is recorded on the worksheet. The number of imperfects in each size fraction is totalled, and the percentage determined.

NOTE 1: Examples of imperfect beads include: (a) angular chips, broken beads and internal fractures, (b) encrusted, dull, and non-reflective colored beads, (c) fused cluster, twinned beads with smaller bead diameter greater than one tenth of the larger bead, dumbbell twins with internal plane at the point of attachment, (d) flat or thin beads, and beads with pronounced spikes or other protrusions, and (e) oblong beads with major axis more than twice the length of the minor.

6.3 *Calculations*:

6.3.1 Multiply the percent imperfects for each size fraction by the percent retained in each fraction to get the weighted percent imperfect. Similarly calculate the weighted percent imperfect for the other fractions and determine the total. Record all percentages to the nearest 0.1%.

7. <u>Method for Determining Index of Refraction</u>

7.1 *Apparatus*:

- Polarizing microscope 200X.

- Microscope slides and cover slides.

- Refractive Index Oils from 1.49 to 1.53.

7.2 *Procedure*:

7.2.1 Prepare a microscope slide by placing one drop of index of refraction oil on the slide (usually the oil used to start the test is a standard 1.516). With tweezers, place several glass beads (from the No. 80 - No. 100 [180 - 150 μm] size fraction from the gradation test) on the oil droplet, and place a cover slide on top of the oil and beads.

7.2.2 Place slide under microscope and locate beads through the microscope using a tungsten light source. Focus on several beads and then move the microscope platform down and then up to observe in which direction the bright ring surrounding the individual beads moves. If, when lowering the microscope stage, the bright ring of light moves into the bead, the index of refraction of that bead is higher than that of the surrounding oil standard. If the bright ring of light moves away from the bead, the bead has a lower index than the surrounding oil.

7.2.3 If the bead has a lower index of refraction than the oil, repeat using the next lower index oil until the index of the bead is higher than the oil. This locates the index of the bead between that of the two oils.

7.2.4 If the bead was a higher index of refraction than the oil, repeat using the next higher index oil until the index of the bead is lower than the oil. This locates the index of the bead between that of the two oils. Report the results to the nearest 0.01 on the final report form (See Figure 2).

NOTE 2: A more accurate determination can be made by combining oils. For example, if one drop of 1.512 oil is added to one drop of 1.516, the resulting index will be approximately 1.514, but this precision is not normally warranted.

8. <u>Method for Determining Chemical Stability</u>

8.1 *Definitions*:

8.1.1 Alkalinity number - The number of mL of 0.1N HC1 required to reach the titration end point.

8.2 *Apparatus*:

8.2.1 10 mL buret with 0.05 mL divisions.

8.3 Procedure:

8.3.1 Place 100 mL of distilled water in a 250 mL Erlenmeyer flask and bring to a boil. Remove from heat and pour a 10g sample of glass beads (unsieved) into the flask. Place back on heat and boil gently or five minutes. At the end of the 5 minute boiling period, remove the beads from the water by filtering. Rinse the inside of the flask and rinse the glass beads with distilled water and drain the washings into the original filtrate. Stopper the flask containing the filtrate and

allow to cool to room temperature.

8.3.2 After cooling, add 4 or 5 drops of phenolphthalein as a color indicator to the filtrate, and then titrate with 0.1N HC1. The titration end point is reached when there is no longer a trace of pink coloration to the filtrate.

8.3.3 The number of mL of a 0.1N solution of HC1 required is equivalent to the alkalinity number. For example, if it takes 0.4 mL of 0.1 N HC1 to reach the titration end point, then the alkalinity number is 0.4. Record the alkalinity number to the nearest 0.1 on the worksheet and the report form (Figures 1 & 2).

9. Method for Color Determination

9.1 *Apparatus*:

9.1.1 Four standard vials of desired and acceptable colors.

9.2 *Procedure*:

9.2.1 Place a vial of the sample beads next to the standard beads and visually match the beads with the standards for color. The four acceptable colors are: very light gray, very light gray tinge, colorless, and bright white.

9.2.2 Report as "passes" or "fails". A note describing the beads' color (light gray tinge, or bright white) may be put in the laboratory notes area on the report form.

10. Resampling

10.1 If the material does not meet the specification requirements, a resample is ordered from the field and the resample is included under the same laboratory number as the original sample.

11. Report

11.1 Transfer the information from the calculation worksheet (Figure 1) to the report form (Figure 2), with the gradation and imperfects percentages rounded to the nearest whole percent.

11.2 If a resample is run, report the results as the average of the two tests.

FIGURE 1

Glass Beads for Pavement Marking
Calculation Worksheet

Lab. No. _____

Gradation: Tested by:

Sieve Size	Retained, g	Retained, %	Total Passing, %
No. 20 (850 µm)			
No. 30 (600 µm)			
No. 40 (425 µm)			
No. 50 (300 µm)			
No. 80 (180 µm)			
No. 100 (150 µm)			
Passing No. 100 (150 µm)			
Total			

Imperfects Determination: Tested by:

Size Fraction	Retained, *g	Retained, %	Imperfects		Weighted Percent
			Count	%	Imperfect
No. 30-40 (600-425 µm)			200/		
No. 40-50 (425-300 µm)			200/		
No. 50-80 (300-180 µm)			200/		
No. 80-100 (180-150 µm)			200/		
Total			800/		

*Weights as determined for gradation (except total).

Fraction	No. 30 - 40		No. 30 - 40		No. 30 - 40		No. 30 - 40	
	(600 to 425 µm)		(600 to 425 µm)		(600 to 425 µm)		(600 to 425 µm)	
	Count	Imp.	Count	Imp.	Count	Imp.	Count	Imp.
	40		40		40		40	
	40		40		40		40	
	40		40		40		40	
	40		40		40		40	
	40		40		40		40	
Total	200		200		200		200	

Total mL of 0.1N HCL _____

FIGURE 2

GLASS BEADS FOR PAVEMENT MARKING

Report Form

Type						Lab. No.
Producer						
Date Received		Date Reported				P.O. No.
Sample	TEST RESULTS			Specs.		
	Original	Resample	Average	Min.	Max.	
Color						
Gradation, % passing						
No. 20 Sieve, (850 μm)				100		
No. 30 Sieve, (600 μm)				75	95	
No. 50 Sieve, (300 μm)				15	35	
No. 100 Sieve, (150 μm)				0	5	
Chemical Stability, Alkalinity Number					2.0	
Index of Refraction				1.50		
Imperfect Particles, %					25	
Average Net Weight per bag - kg				23.0		

REMARKS:

MICHIGAN TEST METHOD
FOR
PHYSICAL TESTS OF PAINT FOR PAVEMENT MARKING

1. Scope

1.1 These methods cover the testing of physical properties of pavement marking paint. There are eight procedures for the following properties: (1) Weight per liter, (2) Drying time, (3) Viscosity (KU), (4) Pigment Content, (5) Total Solids (Nonvolatile Content), (6) Vehicle Solids, (7) Reflectance, and (8) Color.

2. Applicable Documents

2.1 Federal Test Method Standard No. 141a:

Method 4184.1 Weight Per Liter

Method 4281 Consistency of Pigmented Materials Krebs-Stormer

Method 4021.1 Pigment Content

Method 4041.1 Volatile & Nonvolatile Content (Ordinary Lab Oven)

Method 4051 Vehicle Solids (Ordinary Centrifuge)

Method 4252 Color Specifications from Photoelectric Tristimulus Data

2.2 ASTM Standards:

D 711 No-Pick-Up Time of Traffic Paint

E 308 Color in CIE 1931 System

3. Summary of Methods

3.1 *Weight per Liter* - Determine the weight per liter of paint by weighing a known volume and converting the weight in grams to grams per liter.

3.2 *Viscosity* - By use of the Krebs-Stormed instrument, determine the viscosity in Krebs Unit (KU) (Time-weight ratio per given resistance).

3.3 *Pigment Content* - Extract pigment from the whole paint by use of ordinary centrifuge and solvents, and calculate the residue as percent pigment.

3.4 *Volatile and Nonvolatile Content* - Weigh samples of whole paint and drive off the vocatives by heating in an oven. Reweigh and calculate loss as vocatives and the residue as nonvolatile.

3.5 *Vehicle Solids* - Using test results of 3.3 and 3.4, calculate the vehicle fraction and determine the vehicle nonvolatile.

3.6 *Color* - Draw down a film of paint on an aluminum panel, allow to dry, then measure the X and Y co-ordinates on a colorimeter.

3.7 *Reflectance* - Measure the reflectance on the same panel as the X and Y color co-ordinates, using a different set of standards with the colorimeter.

3.8 *Drying Time* - Draw down a film of paint, add glass beads to the wet film and run a drying time wheel over the film within one minute. Continue to run the drying time wheel over the film until no paint is picked up by the wheel's rubber tires.

4. Sampling

4.1 Submit three 500 mL friction-top cans filled to the top and sealed.

4.2 Take samples from the producers filling lines while the batch is being packaged and label each can with the batch number. Fill out a Michigan Department of Transportation ID form #1923, package and ship samples to the Construction and Technology Chemistry Laboratory.

4.3 Samples taken at the point of delivery should be taken from thoroughly agitated containers so that the samples will be well mixed. Samples should be taken by MDOT inspectors, packaged, and shipped to MDOT, Construction and Technology Chemistry Laboratory with a completed sample ID.

4.4 Sample Preparation:

4.4.1 Mix the paint in the sample can by shaking for 2 to 3 minutes on a paint shaker.

4.4.2 When the sample is removed from the paint shaker, place it in a constant temperature water bath at 25 ^{o}C for thirty minutes minimum so that the sample will adjust to the 25 C temperature and air bubbles may dissipate.

4.4.3 After preconditioning the paint sample, run the nonvolatile, pigment, weight per liter, color and reflectance, and drying time from the first 500 mL can as quickly as possible after opening. A 20 mL syringe is filled once for use in weighing the nonvolatile test samples, and the pigment content test sample. A second 500 mL can is opened after preconditioning and the viscosity run immediately. The third 500 mL can is saved for retests, or special tests.

5. Determining Weight per Liter (FTMS 141a, Method 4181.1 modified)

5.1 *Apparatus*:

Balance - Capable of weighing to the nearest 0.01 gram.

Cup - A smoothly finished aluminum cup with a snug fitting plug cover having a small hole in its center, and a capacity of 83.2 grams of water.

5.2 *Procedure* - Weigh the empty cup and cover. Fill the cup almost to the rim, or to the ring engraved inside the cup, with a preconditioned paint sample. Carefully place the cover on the cup, seat it with a rotary motion, and wipe off the paint that comes out the cover hole and along the rim. Weigh the cup filled with paint to the nearest 0.1 gram.

5.3 *Calculation* - Determine the actual weight of the paint in the cup, by subtracting the weight of the empty cup from its weight full (see worksheet).

6. Determining Consistency (Viscosity) (FTMS 141a, Method 4281)

6.1 *Apparatus*:

Viscometer - Krebs-Stormed with a paddle rotor.

Container - 500 mL friction top can with a diameter of approx. 85 mm.

Thermometer - A range of 20 ^{o}C to 70 ^{o}C.

Timer - A stopwatch or other timing device graduated in 0.2 second or less.

6.2 *Procedure*:

6.2.1 After preconditioning sample, run the viscosity test immediately upon opening the can, so that loss of volatile matter is not a factor. Place the container on the platform of the viscometer so that the rotor is immersed in the sample to the mark on the rotor shaft.

6.2.2 Before starting the actual test, turn the rotor through 100 revolutions and adjust the weights to get as near as possible to 30 seconds per 100 revolutions of the rotor. Then from a running start (at least ten revolutions) run the test two or three times and average the Krebs Unit readings (see worksheet).

6.2.3 From the chart supplied with the Krebs-Stormed viscometer, determine the Krebs Units, based on the weight required to produce the specified speed.

7. Determining Pigment Content (FTMS 141a, Method 4021.1 with modifications)

7.1 *Apparatus*:

Balance - Capable of weighing to the nearest 0.001 gram.

Centrifuge - Multi-unit head, speed of approximately 2000 rpm.

Oven - Gravity convection, well ventilated, thermostatically controlled to 105 C.

Centrifuge Tubes - Glass, 100 mL capacity.

Syringe - Plastic disposable, 20 mL capacity.

7.2 *Reagents*:

Extraction Mixture A - 1 part Acetone, 2 parts Toulene by volume.

Ethyl Ether (ACS).

7.3 *Procedure*:

7.3.1 Fill a 20 mL disposable syringe with preconditioned paint, and weigh.

7.3.2 Place from 10 to 15 grams of paint from the syringe into a preweighed glass centrifuge tube, and reweigh the syringe. The weight of the paint is determined from the difference in the weights of the syringe.

7.3.3 Add 20 to 30 mL of Mixture A to the centrifuge tube, mix thoroughly with a glass rod. Wash off rod and add Mixture A to approximately 60 mL.

7.3.4 Place tube in centrifuge and counterbalance each arm used. Centrifuge until well settled (usually 15 to 30 min) or until the supernatant liquid is clear.

7.3.5 Pour off the clear liquid and repeat the procedure in 7.3.3 and 7.3.4 twice more. For the fourth wash use 30 or 40 mL of ethyl ether (the ether wash aids in drying the extracted pigment) but otherwise following the steps in 7.3.3 and 7.3.4.

7.3.6 After the ether wash has been poured off, tap the tube in the palm of the hand to dislodge the pigment from the bottom of the tube. Place the tube in a fume hood and allow the ether that remains in the pigment to evaporate slowly. After the ether has evaporated, once again tap the tube to dislodge the pigment, and place the tube and pigment inside an oven at 105° C 2 ^{o}C for two hours.

7.3.7 Cool and weigh. This procedure assumes that all of the vehicle constituents are soluble in extraction mixture A and have been dissolved and decanted away, and all that remains in the tube is pigment.

7.4 *Calculations* - (See Worksheet):

7.4.1 Pigment Content -

$$Pg = \frac{PW}{S_1} \times 100$$

Where:

	Pg	= Pigment content, %
	Pw	= Weight of pigment after extraction, g
	S_1	= Sample weight, g

7.4.2 Vehicle Content -

$$V = 100 - Pg = \frac{S_1 - Pw}{S_1} \times 100$$

Where: V = Vehicle content, %

7.4.3 Vehicle Fraction -

$$VF = 0.01\ V = \frac{S_1 - Pw}{S_1}$$

Where: VF = Vehicle fraction (used to calculate percent nonvolatile content in the vehicles)

8. Determining Volatile and Non Volatile Matter (Ordinary Oven) (FTMS 141a, Method 4041.1 Modified)

8.1 *Apparatus*:

Aluminum weighing dish - flat bottom, 60mm diam.

Convection type oven - 105 ^{o}C.

Analytical Balance - 0.0001 gram accuracy.

Disposable Syringe - 20 mL capacity.

8.2 *Procedure*:

8.2.1 As described in Federal Standard No. 141a, Method No. 4041.1 except Section 4.1 is modified as follows:

8.2.2 Use a 20 mL syringe instead of a dropping bottle, to reduce exposure to the air. Use a sample weight of 1 to 2 grams, determined by loss in weight of the syringe, and dissolve in 6 mL of reagent grade toluene. Dry in the oven at 105 C for two hours.

8.3 *Calculations* - (See Worksheet):

8.3.1 Volatile Matter -

$$PV = \frac{S_2 - R}{S_2} \times 100$$

Where: PV = Volatile Matter in paint, %

S_2 = Sample weight, g

R = Weight of residue after drying, g

8.3.2 Nonvolatile Matter -

$$PNV = 100 - PV$$

Where: PNV = Nonvolatile matter in paint, %

8.3.3 Vehicle Solids -

$$VS = \frac{(S_2 - R)}{S_2 \times VF} \times 100 = \frac{PV}{VF}$$

Where: VS = Vehicle solids by weight of vehicle, %

VF = Vehicle fraction (see 7.4.3)

9. <u>Determining Color and Reflectance (FTMS 141 a, Method 4252 Modified)</u>

9.1 *Apparatus*:

Colorimeter - Capable of determining Reflectance X, Y, and Z tristimulus values.

Film Applicator - Wet film of 380 μm + 15 μm.

Aluminum Panels - 150 mm x 200 mm approx.

9.2 *Procedure*:

9.2.1 Apply a film of paint on an aluminum panel 380 μm + 15 μm wet thickness using the film applicator, and allow to dry in a horizontal position overnight.

9.2.2 Turn on the colorimeter and allow to warm up for 30 minutes.

9.2.3 Standardize the colorimeter with the proper set of standards then take readings on the paint film.

9.3 *Calculation*:

9.3.1 Calculate the tristimulus values X, Y, Z, as per colorimeter instructions, then calculate and report chromaticity coordinates x and y.

9.3.2 *Reflectance* - Recalibrate the colorimeter using a new set of reflectance standards. Using the same panels of sample paint films, read reflectance of the paint directly from the instrument.

10. Determining No-Pick-Up Time (ASTM Method D 711 Modified)

10.1 *Apparatus*:

Traffic Paint Drying Time Wheel - Figure 1 of ASTM D 711.

Film Applicator - 380 μm + 15 μm wet film thickness.

Timing Device - Stopwatch or electric timer.

10.2 *Procedure*:

10.2.1 As described in ASTM D 711 except as follows:

10.2.2 Weigh 11.6 grams of glass beads and place in a salt shaker. Immediately after casting the paint film, sprinkle the beads evenly over the paint film and continue the test procedure as in ASTM D 711. The 11.6 grams of beads uniformly distributed over a 100 mm by 450 mm surface is equivalent to 600 g of beads per liter of paint.

11. Reporting Results

11.1 Test results are recorded on the test report including disposition of material.

PAINT ANALYSIS WORKSHEET

Laboratory No.

WEIGHT PER LITER

Bottle + Sample

Bottle
Sample
Kg/L = = _____
83.3 mL

Wt./Liter = Wt. Sample / Vol. Bottle

% PIGMENT

Tube + sample

Tube _____
Wt. Sample _____

Tube + pigment

Tube _____
Wt. Pigment _____

% Pigment = Wt. Pigment / Wt. Sample X 100

% Pigment = _____

% VEHICLE

100% - % Pigment = _____

100% - _____= _____ % Vehicle; Veh. fraction =

% VOLATILE THINNER

	Sample	Sample	Sample	Sample
Bottle + sample				
Bottle				
Sample				
Dish				
Dish + sample				
Dish + residue				

Vol. thinner
Sample x veh. fr.
% Volatile thinner

Avg. _____

% Volatile Thinner = Wt. Volatile thinner / Wt. Sample x Vehicle Fraction X 100

% Resins and Oils 100% - Volatile Thinner = %Resins and Oils
100% - = %Resins and Oils

Viscosity Wt. Grams	Krebs Units Time Sec.	Krebs	Ford Cup Time Sec.
		Avg.	Avg.

Gardner Tube _____ Viscosity: poises

MICHIGAN TEST METHOD
FOR
SAMPLING TIMBER GUARDRAIL POSTS, BLOCKS, AND SIGN POSTS FOR CHEMICAL TREATMENT TESTS

1. Scope

1.1 This method describes the procedure for sampling guardrail posts and blocks and sign posts to check the preservative retention and penetration.

2. Referenced Documents

2.1 MDOT Standards

Standard Specifications for Construction

2.2 American Wood Preservers= Association
Standard A3, M2 (Section 5.2 and 5.3) and M6

3. Equipment

3.1 Increment borer
Extractor
Specimen holder, cutting block, knife
Gloves (latex)
Plastic container and marking pen

4. Procedure for Sampling

4.1 Determine the number of treated charges to be sampled. The treater may supply this number. The number of posts and/or blocks for each charge shall also be obtained from the treater.

4.2 The number of stacks/piles of posts/blocks in each charge shall be determined visually without closely examining each stack/pile.

4.3 Twenty borings per charge shall be spread equally over the stacks/piles making up that charge.

4.4 Borings are taken at approximately the center of the widest face of the post/block. Exceptions are permissible if stacking arrangements or banding does not permit this procedure. No boring shall be taken closer than 1 inch (25 mm) from any edge.

4.5 Do not take borings from splits, knots, resin areas, or wild grain.

4.6 Mark area to be bored with a lumber crayon or felt tipped marker. Drill through this mark to identify the specimen.

4.7 Complete sample identification. List type of material (i.e., posts, blocks, sign posts, etc.), size, type of treatment (CCA or Penta), and species of wood, if known.

4.8 If any post or block needs to be resampled because of the lack of an adequate number of posts or blocks, resample following the above procedure; however, do not take a second boring within 2 inches (50 mm) of the first boring. The second boring should be taken along the same grain pattern as the first boring.

4.9 Plug each hole with a treated plug driven home or with the excess flattened to within c inch (3 mm) of the surface.

MICHIGAN TEST METHOD
FOR
INSPECTION AND PULL TESTING OF
TEMPORARY CONCRETE BARRIER LOOPS

1. Scope

1.1 This test method describes the equipment, procedure and test frequency for pull testing loops on temporary concrete barriers.

1.2 This MTM is used with the Certification Procedure described in C-3 of the Materials Quality Assurance Procedures Manual.

1.3 The purpose of testing temporary concrete barriers is to ensure the end cable attachment assemblies conform to the requirements of Standard Plan R-52 Series 1996 Standard Specifications for Construction and Special Provision. With proper installation, the barrier end cables should meet or exceed the minimum pullout test requirement and be properly sized to allow field assembly of barrier sections within the specified tolerances.

1.4 The project engineer or Region materials staff will be provided the opportunity to witness all sampling and testing conducted by the Contractor.

2. Referenced Documents

2.1 MDOT Standards
Standard Plan R-52 Series
Standard Specifications for Construction
Special Provisions
Materials Quality Assurance Procedures Manual

3. Testing Equipment

3.1 30 ton (178 kN), hollow plunger, testing ram

3.2 Hydraulic pump

3.3 Clevis, thimble, threaded rod and pin

3.4 Horseshoe and miscellaneous leveling pins

3.5 Calibration chart psi gauge reading to pounds force of load (kPa gauge reading to newton of load)

NOTE: All testing equipment must be calibrated annually. MDOT equipment will be returned to the Structural Research Laboratory for calibration (Construction and Technology Building, Secondary Governmental Complex, 8885 Ricks Road, Lansing). The Contractor must provide a copy of calibration certification for their equipment to the project engineer.

4. Dimensional Measurements

4.1 The Contractor is responsible for dimensional measurements of all Temporary Concrete Barrier as shown on Standard Plan R-52 Series.

4.1.1 Measure the distance from the face of the barrier to the inside edge of the cable. This measurement is to be taken at the center of the loop, perpendicular to the barrier. Any individual loop that fails to meet this dimension will be rejected.

NOTE: Cables that have been pull tested may not meet this requirement. Therefore, dimensions should be checked prior to pull testing.

4.1.2 Measurement from one outside edge of the cable to the other outside edge, along the end of the barrier, can be checked by placing the horseshoe over the loop. If the horseshoe does not fit down over the loop, the loop is too wide and will be rejected.

4.1.3 Check to make certain loops are within allowable limits of center on the end of the barrier.

4.1.4 Check to make certain the loops are within allowable distances from the top and bottom of the barrier.

5. Field Inspection

5.1 MDOT personnel will perform a careful visual inspection of all barrier sections used on a job. The inspector will look for damaged or frayed cables, severely rusted loops, spalled concrete, exposed rebar, etc., all of which are reasons for rejecting the barrier sections. While inspecting, look for loops that do not have any bonding material extruded around the cables. These end attachments are improperly grouted and will generally provide the lowest pull out strengths. Any cable which appears suspect is to be pull tested by MDOT personnel following the procedures in Section 7.

5.2 After the barriers have been placed, the pins installed, and the loops snugged, the construction inspector will check for the 4 inch (100 mm) dimension between the barrier sections.

5.3 If the overall inspection of the temporary concrete barriers as placed on the project is satisfactory to the engineer, and a complete Type D Certification has been received, a statement should be made on the Inspector=s Daily Record (IDR) to indicate the inspection was performed.

6. Frequency of Test and Retest

6.1 Contractor Testing

6.1.1 Prior to placing barrier sections and following the procedures in Section 7, the Contractor will perform pull tests on a minimum of 15 percent of the untested barrier loops selected from new barrier sections and newly retrofitted sections.

6.1.2 If one of the loops fails the pull test, twice the number of loops shall be tested. If another loop fails the pull test, all of the remaining loops shall be tested. (Example: a Contractor has 500 loops on a job. Fifteen percent (75) loops must be tested. If one loop fails the test, the Contractor must now test 150 loops. If another loop fails, all 500 loops must be tested).

6.1.3 MDOT reserves the right to review pull testing results upon request.

6.2 MDOT testing

6.2.1 Following the procedures in Section 7, MDOT personnel reserve the right to conduct pull testing.

6.2.2 Whenever loops are found which appear damaged, they should be tested even if testing has previously been done.

7. Pull Test Procedure

7.1 Included in the MDOT pull test equipment box is a calibration sheet that relates psi (kPa) gauge readings to pounds (newton) of load. Each calibration sheet corresponds to an individual ram. Be certain the calibration sheet and test ram go together.

7.2 Place the horseshoe over the loop to be tested. Place the thimble against the inside of the loop to be tested. Attach the ram to the cable by inserting the pin through the clevis and the thimble. The thimble is used to reduce the probability of breaking the cable. If testing must be done without the thimble and the cable breaks in the radius, **DO NOT** count this test as a failure as this is not a test of the epoxy anchor system. Although the loop must be replaced, only failures of the epoxy anchor system are used for evaluation of the loop integrity. If the cable extrudes from the concrete any distance, this is a failure of the anchoring system and would be counted for rejection.

7.3 Once the pin is in place, hand tighten the nut at the end of the ram to take up as much slack as possible. This will be necessary to avoid the possibility of the ram reaching full stroke and the clevis hitting the back of the device before the cable reaches the full test load.

7.4 Begin loading the ram and continue loading until the pressure gauge reaches a reading which corresponds to the required test load of 32,000 lbf (142,000 N) (approximately 7,000 psi (48,000 kPa) on the gauge for most MDOT pumps). At this point begin timing for one minute. During this time, the gauge reading should not drop below the psi (kPa) reading that corresponds to the minimum specified load of 30,000 lbf (133,000 N) (approximately 30,000 lbf (45,000 kPa) on the MDOT gauge). If the load falls only slightly below the 30,000 lbf (133,000 N) requirement, the loop should be reloaded and tested again.

Be careful to avoid the clevis hitting the back of the device. If this occurs, the device may show a passing loop that actually failed.

CAUTION: When applying load to the cable, do not stand in front of the ram. Sudden release could occur causing the unit to fly back.

NOTE: Under normal test procedure, once 32,000 lbf (142,000 N) is reached you may see a slow drop in pressure due to cable stretching or possible concrete crushing at the

base of the ram. This slow drop should not cause the gauge reading to drop below the 30,000 lbf (133,000 N) mark in the one minute time limit.

7.5 Any loop which fails the pull test is to be spray painted bright orange. All loops which pass the pull test will be painted green.

8. Rejection of Barrier Sections

8.1 Individual Barrier sections can be rejected for reasons including but not limited to:

8.1.1 Physical condition (spalling, exposed rebar, etc.)

8.1.2 Incorrect loop dimensions.

8.1.3 Failure to meet loop pull out strength requirements.

8.2 The entire supply of barrier sections can be rejected for reasons including but not limited to:

8.2.1 Failure to provide all Type D Certification documentation

8.2.2 Failure of more than two loops subjected to pull testing by the Contractor.

8.2.3 Failure of more than two loops to meet the dimensional requirements.

8.2.4 Failure of more than two loops subjected to testing by MDOT.

9. Reporting Procedure

9.1 The Contractor shall provide a report of all pull tests conducted as a part of the Type D certification for all temporary concrete barrier sections placed on a project.

MICHIGAN TEST METHOD
FOR
SIGN POST DRIVING HEADS

1. Scope

1.1 This method covers the sampling and testing of large sign post driving heads.

2. Referenced Documents

2.1 *ASTM Standards*:
A 322 Standard Specifications for Steel Bars, Alloy, Standard Grades
A 681 Standard Specification for Tool Steels Alloy

2.2 MDOT Materials Quality Assurance Procedures Manual

3. Testing Equipment

3.1 Rockwell Hardness Tester

3.2 Micrometer for Measuring Material Thickness

3.3 Ruler Graduated to 0.02 inch (0.5 mm)

3.4 Calipers

3.5 Carbide Saw

4. Material Requirements

4.1 Each sign post driving head shall be fabricated from material as specified in the purchase order conforming to the requirements of either ASTM A 322 Grade 6150, or A 681 Type S7.

4.2 The final surface hardness of the final sign post driving head shall meet the following:

Material Designation	Hardness Range (Rockwell-c)
A 322 Grade 6150	48 - 55
A 681 Type S7	50 - 55

4.3 The shipment of sign post driving heads shall be furnished with a Type "A" certification, including final surface hardness tests and chemical analysis documentation, with identification to the heat number of the steel, and to furnace lot number if heat treated.

4.4 All sign post driving heads shall be stamped prior to heat treatment with the lot identification numbers to identify them with a specific test report. Markings shall be located on the flat surface as indicated in the attached figures.

4.5 In addition to the Type "A" certification, a minimum of one percent of the total shipment or one driving head per heat per shipment will be sampled and tested by the department's Construction and Technology Division before final acceptance and

payment is made. Each specimen sampled will be tested for final surface hardness and conformance with dimensional requirements. Chemical analysis testing may be performed by the Construction and Technology Division. The department will allow a retest if it is determined that original test specimen does not meet final surface hardness and/or chemical analysis requirements. Sampling for the retest will be at twice the frequency as that of the original test. Failure to meet specification requirements will be justification for rejection and the entire shipment will be returned at the expense of the supplier.

5. Testing Procedures

5.1 Each sign post driving head sampled by the department will be tested at the Construction and Technology Division laboratory as follows:

5.1.1 Type "A" certification documentation, as described in Subsection 4.3 of this test method, will be reviewed for conformance.

5.1.2 If chemical analysis testing is to be conducted, material to be tested will be removed from the driving head as shown in the attached figures.

5.1.3 Critical dimensions will be verified as shown in the attached figures.

5.1.4 Final surface hardness testing of the driving head will be verified. Hardness tests will be performed at approximately 2 inch (50 mm) intervals randomly along the length of the driving head. A minimum of six tests will be conducted on the driving head.

6. Report

6.1 The Construction and Technology Division will produce a laboratory test report. The test report will include the specific physical and chemical test results for each sample tested and the final disposition of the shipment.

'CRITICAL 013ENSIONS MUST SF MAINTAINED. CRITICAL PNGTIIS

±1 .0 run. CRITICAL RADII SHAG. BE b <5

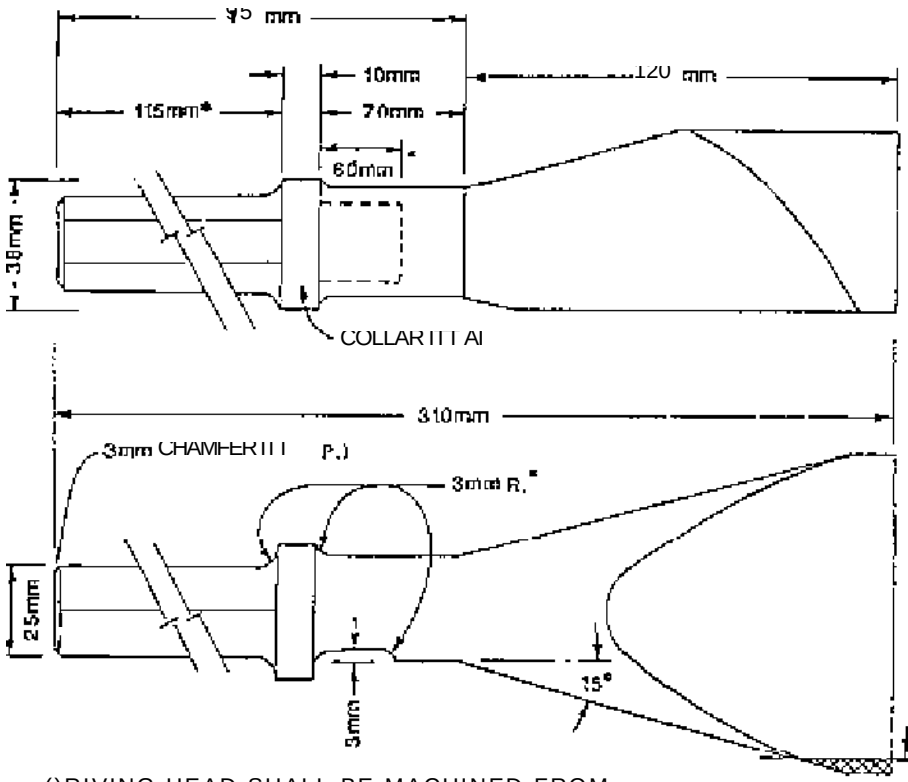

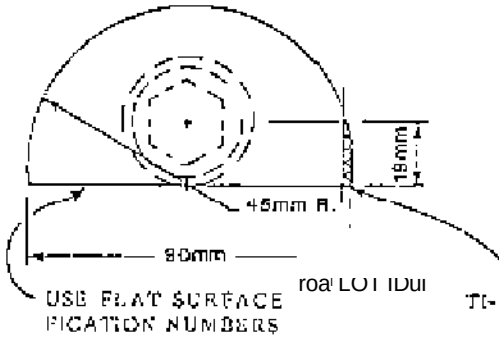

PIECE TO R9 REMOVED WOES o HEW-CAL ANALYSIS TESTING IS TO SIR

OUC F:

RUIREM ENOS OF THE ELEMENTS INVOLVED.

()RIVING HEAD SHALL BE MACHINED FROM 90mn, DIAM. ROUND BAR.

FL SURFACE HA DRESS SHALL MEET SPECIFIED HARDNESS RANGE (ROCK WELL —CI ON ALL SURFACES.

HEX SHAFT SHALL BE ABOVE COLLAR ONLY.

SIGN POST DRIVER, LARGE
WAREHOUSE PART 99 5567-2102

12-15-92 MOOT

SCALE: NONE

DRAWN BY. IP MOREHOUSE

CHECKED DV: R. MCCRUM

7MM

MICHIGAN TEST METHOD
FOR
TESTING CORRUGATED POLYETHYLENE PIPE
AND CORRUGATED POLYETHYLENE TUBING

1. Scope

1.1 This method covers the procedures for testing corrugated polyethylene pipe 12 to 36 inch (300 to 900 mm) diameter and corrugated polyethylene tubing 3 to 10 inch (75 to 250 mm) diameter once samples have reached the Central Laboratory.

1.2 This method describes specific modifications (additions and deletions) from the AASHTO and referenced ASTM standards.

2. Related Documents

2.1 AASHTO Standards

M 252 Standard Specification for Corrugated Polyethylene Drainage Tubing.
M 294 Standard Specification for Corrugated Polyethylene Pipe, 300 to 1200 mm diameter

2.2 ASTM Standards

As referenced in AASHTO M 252 and M 294.

2.3 MDOT Publications

Standard Specifications for Construction
Supplemental Specifications
Special Provisions

3. Equipment

3.1 Equipment shall be as described in AASHTO M 252, M 294 and documents referenced therein.

4. Test Procedure

4.1 Except as otherwise stated herein, all testing shall be according to AASHTO M 252 or M 294.

4.2 Subject pipe and tubing shall be tested for the following: markings, workmanship, visible defects, inside diameter, perforations, elongation, pipe stiffness, pipe flattening, brittleness, and fitting requirements as described in related AASHTO standard.

4.3 Subject pipe and tubing shall not be tested for environmental stress cracking, high temperature strength or low temperature flexibility as described in related AASHTO standard.

4.4 Pipe stiffness and pipe flattening tests will be conducted according to AASHTO (i.e.: specimens "B" and "C" shall be rotated 45 and 90 degrees respectively from the orientation of specimen "A" as described in AASHTO).

MICHIGAN TEST METHOD
FOR
TUNGSTEN CARBIDE INSERTS IN UNDERBODY BLADES

1. Scope

1.1 Testing of the brazed connection between the tungsten carbide inserts and the underbody blades will determine if the underbody blades meet the current MDOT Specifications.

2. Testing Equipment

2.1 Electro-hydraulic test machine.

2.1.1 Fixture for shear testing of the brazed connection.

2.1.2 Microscope (20X minimum).

3. Selection and Quantity of Samples to be Tested

3.1 Two blades per shipment (a shipment shall be considered any delivery that takes place within a three [3] week period) or four (4) blades per yearly order, whichever is greater; shall be sampled and tested by the MDOT Construction and Technology Division before final acceptance and payment is made.

3.2 From each blade four sample specimens shall be taken. Two samples shall be taken from each third point of the blade for a total of four specimens.

4. Brazing Requirements

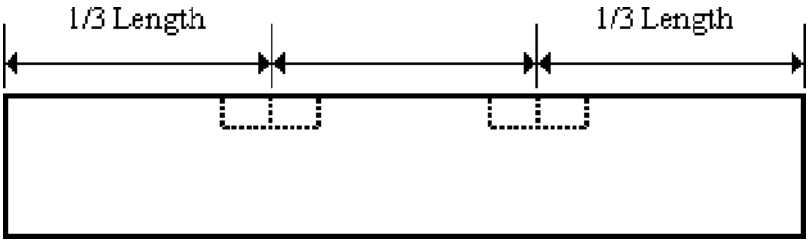

4.1 The MDOT specification for cutting edges with tungsten carbide inserts for moldboard assemblies requires that the inserts be securely brazed over the entire length and surface of the blade groove. Workmanship shall be consistent with sound brazing practice with no evidence of voids or use of shims. A visual inspection will be performed to determine if there are any voids present. Any observed voids in the brazing shall be noted on the test report. Brazing gaps, excessive voids, or oxidated surface not holding brazing material shall be cause for rejection of the shipment.

4.2 The brazing material shall be a high strength alloy type with a minimum rated shear strength of 30,000 psi (207,000 kPa). A "Type D" certification from the manufacturer of the brazing material is required to be submitted with the invoices to the Central Office. This certification will be forwarded to the Aggregate and Metals Laboratory.

5. Preparation of the Test Specimen

5.1 Each underbody blade to be tested shall be sawed so that an individual insert and the blade base materials surrounding that insert are removed from the overall blade. The test specimen shall be machined to 3/4 x 3/4 x 1 inch (19 x 19 mm thickness x 25 mm long).

6. Procedure

6.1 The test load shall be applied to the insert along the longitudinal axis at a rate not to exceed 350 lbf/sec (1560 N m/sec). The peak load value is observed and recorded (failure of the insert does not change the peak loading value observed).

6.2 The peak load is divided by the actual surface area of the insert to blade interface (approximately 0.0104 square feet (0.000968 square meters) to obtain the shear loading value in pounds force per square foot (Newtons per square meter).

6.3 The inserts may shatter during shear testing, causing a lower psi (kPa) value. If the primary mode of specimen failure is shattering of the insert and the shear strength value is less than 20,000 psi (138,000 kPa) the tester may elect to either test additional samples or exclude the specimen from the average test value for that blade. A minimum of three (3) shear test values per blade must be used to calculate a valid average.

6.4 The shear loadings values from the test specimens from each blade shall be averaged to obtain a final test value for each blade.

7. Acceptance or Rejection of the Shipment

7.1 In addition to the brazing workmanship specified in Section 4.1 the shear strength of the brazed connection is evaluated to determine if the shipment is to be accepted or rejected. If the averaged shear strength of each blade tested meets or exceeds the 20,000 psi (138,000 kPa) minimum requirement the entire shipment shall be considered accepted and payment made.

7.2 If for any reason the averaged shear strength of any originally sampled blade falls below a minimum of 20,000 psi (138,000 kPa) one of two things shall occur:

7.2.1 If one originally sampled blade fails to meet the 20,000 psi (138,000 kPa) requirement, a second blade from the same shipment delivery point shall be tested. Failure of this second test blade constitutes a cause for rejection of the entire shipment.

7.2.2 If two or more originally sampled blades fail to meet the 20,000 psi (138,000 kPa) minimum shear strength requirement this shall constitute a cause for rejection of the entire shipment being tested.

MICHIGAN TEST METHOD
FOR
CORRUGATED POLYETHYLENE PIPE
(BELL & SPIGOT FUSED COUPLINGS)

1. Scope

1.1 This method covers the procedures for testing corrugated polyethylene pipe 12 to 36 inch (300 to 900 mm diameter) bell and spigot fused couplings.

1.2 This method describes specific modifications (additions and deletions) from the AASHTO and referenced ASTM standards.

2. Related Documents

2.1 AASHTO Standards
M 294 Standard Specification for Corrugated Polyethylene Pipe, 300 to 1200 mm diameter.

2.2 ASTM Standards
As referenced in AASHTO M 252 and M 294.

2.3 MDOT Publications
Standard Specifications for Construction
Supplemental Specifications
Special Provisions

3. Equipment

3.1 Equipment shall be as described in AASHTO M 294 and documents referenced therein.

4. Test Procedure

4.1 Except as otherwise stated herein, all testing shall be according to AASHTO M-294.

4.2 Coupling shall be cut from pipe specimen leaving at least 6 inches (150 mm) of pipe extending from fused joint. A section of pipe at least 12 inches (300 mm) in length, with the gasket installed on the first corrugation, shall be inserted into the open end of the fitting to complete the assembly of the joint.

4.3 Brittleness of bell and spigot coupling at the butt fused joint/pipe interface may be tested by conditioning the assembled specimen at 25 ^{o}F (-4 ^{o}C) for 24 hours and impacting it one time each at 4 locations approximately 90 degrees apart, using a 10 pound (4.5 kilogram) type-B tup from a height of 10 feet (3 meters) as described in AASHTO. Coupling, pipe or fused interface shall not split, crack or break during this test or the subsequent joint integrity test.

4.4 Subject pipe couplings will be inspected or tested for the following: workmanship, visible defects, joint integrity, as described in related AASHTO standard.

MICHIGAN TEST METHOD
FOR
SOIL ANCHOR DRIVING HEADS

1. Scope

1.1 This method covers the sampling and testing of soil anchor driving heads.

2. Referenced Documents

2.1 *ASTM Standards*:
A 322 Standard Specifications for Steel Bars, Alloy, Standard Grades

2.2 MDOT Materials Quality Assurance Procedures Manual

3. Testing Equipment

- Rockwell Hardness Tester
- Micrometer for Measuring Material Thickness
- Ruler Graduated to 0.02 inches (0.5 mm)
- Calipers
- Carbide Saw

4. Material Requirements

4.1 Each soil anchor driving head shall be fabricated from material as specified in the purchase order conforming to the requirements of ASTM A 322 Grade 6150.

4.2 The final surface hardness of the final soil anchor driving head shall meet the following:

Material Designation	Hardness Range (Rockwell-c)
A 322 Grade 6150	48 - 55

4.3 The shipment of soil anchor driving heads shall be furnished with a Type "A" certification, including final surface hardness tests and chemical analysis documentation, with identification to the heat number of the steel, and to furnace lot number if heat treated.

4.4 All soil anchor driving heads shall be stamped prior to heat treatment with the lot identification numbers to identify them with a specific test report. Markings shall be located on the flat surface as indicated in the attached figures.

4.5 In addition to the Type "A" certification, a minimum of one percent of the total shipment or one driving head per heat per shipment will be sampled and tested by the Department's Construction and Technology Division before final acceptance and payment is made. Each specimen sampled will be tested for final surface hardness and conformance with dimensional requirements. Chemical analysis testing may be performed by the Construction and Technology Division. The Department will allow a retest if it is determined that original test specimen does not meet final surface

hardness and/or chemical analysis requirements. Sampling for the retest will be at twice the frequency as that of the original test. Failure to meet specification requirements will be justification for rejection and the entire shipment will be returned at the expense of the supplier.

5. Testing Procedure

5.1 Each soil anchor driving head sampled by the Department will be tested at the Construction and Technology Division laboratory as follows:

5.1.1 Type "A" certification documentation, as described in Subsection 4.3 of this test method, will be reviewed for conformance.

5.1.2 If chemical analysis testing is to be conducted, material to be tested will be removed from the driving head as shown in the attached figures.

5.1.3 Critical dimensions will be verified as shown in the attached figures.

5.1.4 Final surface hardness testing of the driving head will be verified. Hardness tests will be performed at approximately 2 inch (51 mm) intervals randomly along the length of the driving head. A minimum of six tests will be conducted on the driving head.

6. Report

6.1 The Construction and Technology Division will produce a laboratory test report. The test report will include the specific physical and chemical test results for each sample tested and the final disposition of the shipment.

SOIL ANCHOR DRIVER

USS AT SURFACE FOR
LOT IDENTIFICATION
NUMBERS

SEmen HEX CHUCK

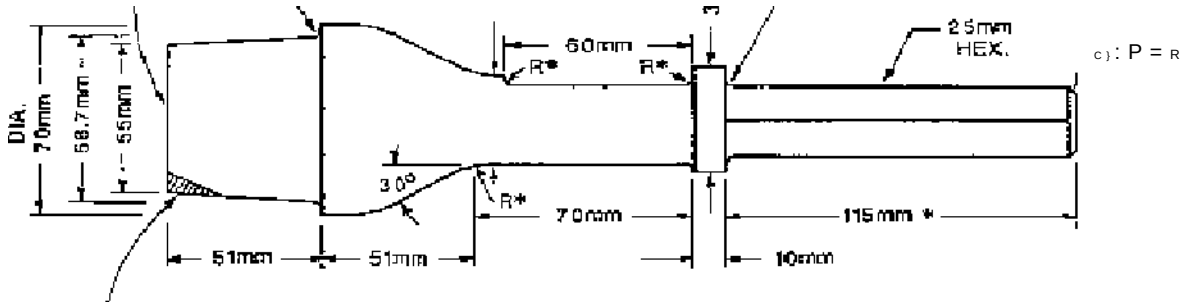

HEX SHAFT SHALL SE ABOVE COLLAR ONLY

PIECE TO BE REMOVED WHEN CHEMICAL ANALYSIS TESTING IS TO SE PERFORMED PIECE SHALL BE LARGE ENOUGH TO MEET THE REQUIREENT OF THE ELEMENTS INVOLVEDM. S_

MACHINE FROM TOrnin BAR. ROUND USE ASTM A322 GRADE MPS ALLOY STEEL HEAT, Olt OUENCH, AND TEN ER WHOLE PIECE PER STANDARD PRACTI E TO ACHIEVE ROCKWELL C *4S-55* HARDNESS LEVEL AT SURFACE OF ENT'S PIECE. MUST MEET THE REOLIREMENTS ISTM721-95

* CRITiCAL DIMENSIONS MUST **BE** MAINTAINED. CRITCAL LENGTHS SHALL **BE** ACCURATE TO mo- HIN ELDrnm CRITICAL RADII SHALL BE AS rCATED. nm aUT <Smn „UNLESS OTHER WISE INDI

SOIL ANCHOR DRIVER
WAREHOUSE PART 0 5 587—

SCALE. imin -
DRAWN BY: R. MOREHOUSE
CHECK Et R. MOCRUM

3
3d

MICHIGAN TEST METHOD
FOR
SMOOTHNESS OF SURFACE

1. Scope

1.1 This test method is used to measure the smoothness of paving courses using a 10 foot (3 m) straightedge, as called for in the Standard Specifications.

2. Referenced Documents

2.1 Standard Specifications for Construction, Section 4.00.12 - 1990 (502.03.H. - 1996).

3. Apparatus

3.1 *Straightedge* - a rigid beam at least 10 feet (3 m) long, supported on equal-sized blocks one inch (25 mm) or greater in thickness at each end, as shown in Figure 1.

3.2 *Ruler or scale graduated in 1/16 inch (1 mm) increments*.

4. Procedure

4.1 Move the straightedge over the surface and parallel to the centerline until the alleged high or low point is found, as in Figure 1. With the ruler in a vertical position, measure the distance between the bottom edge of the straightedge and the surface. Perform the measurement at the point of the highest surface elevation or lowest surface elevation. The difference between the measurement (at the highest or lowest surface elevation) and the block thickness will be the measure of smoothness, as called for in Section 4.00.12 - 1990 (502.03.H. - 1996).

5. Report

5.1 Report the location of the measurement (station and distance right or left) and mark the site on the pavement if correction is required.

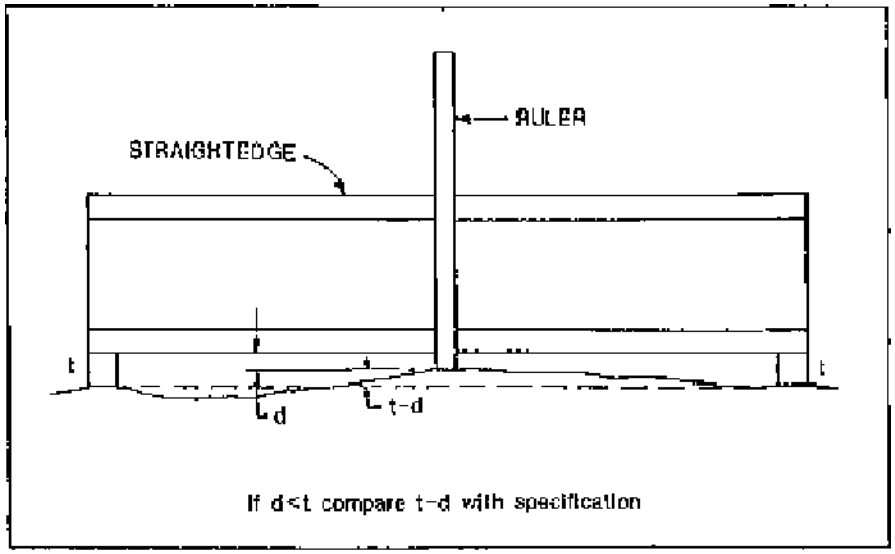
RULER
STRAIGHTEDGE
t
t
d
t-d
If d<t compare t-d with specification

Figure 1.

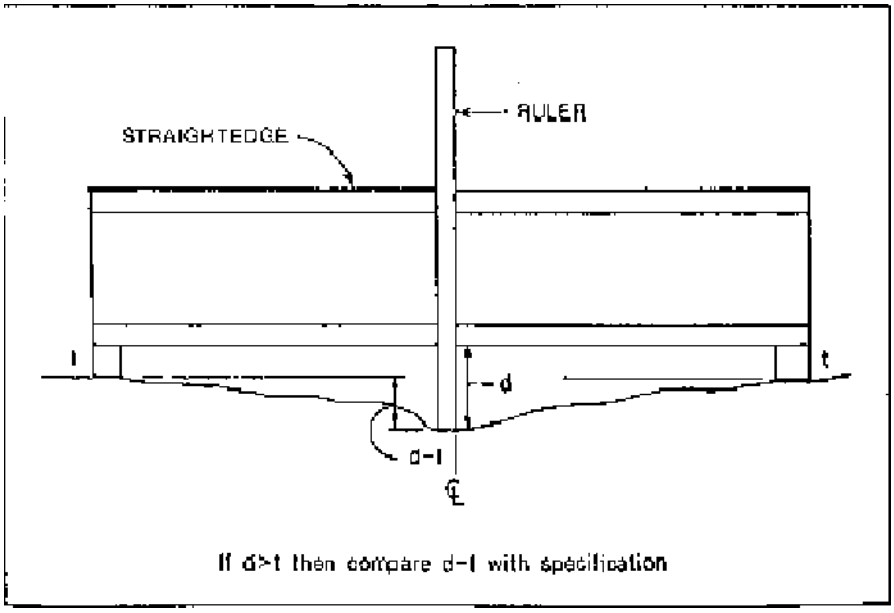
RULER
STRAIGHTEDGE
t
t
d
d-t
℄
If d>t then compare d-t with specification

MICHIGAN TEST METHOD
FOR
WATER TIGHTNESS TESTING OF
CULVERT AND SEWER JOINTS UP TO 24 INCHES (600 MM) IN DIAMETER

1. Scope

1.1 This test method describes the requirements for independent laboratory testing of culvert and sewer joints, up to 24 inches (600 mm) in diameter, to verify water tightness. Laboratory test results will be considered valid once they have been reviewed and accepted by MDOT. Retesting will be required whenever the joint configuration or materials are changed.

1.2 Testing may be conducted by the manufacturer when witnessed and certified by an authorized representative of an independent laboratory. This authorized representative must verify the design and calibration of the testing apparatus.

1.3 Two procedures are included in this MTM either of which may be used to verify the water tightness of sewer and culvert joints. The rate of water leakage from the test section or the rate of air pressure drop in the test section may be measured.

2. Referenced Documents

2.1 ASTM Standards

C828	Standard Practice for Low-Pressure Air Test of Vitrified Clay Pipe Lines
C969	Standard Practice for Infiltration and Exfiltration Acceptance Testing of Installed Precast Concrete Pipe Sewer Lines
C1091	Standard Test Method for Hydrostatic Infiltration and Exfiltration Testing of Vitrified Clay Pipe Lines
F1417	Standard Test Method for Installation Acceptance of Plastic Gravity Sewer Lines Using Low Pressure Air
F949	Standard Specification for Poly (Vinyl Chloride) (PVC) Corrugated Sewer Pipe With a Smooth Interior and Fittings
D3212	Joints for Drain and Sewer Plastic Pipes Using Flexible Elastomeric Seals

2.2 AASHTO Standard

R 82	Standard Practice for Pipe Joint Selection for Highway Culvert and Storm Drains

3. Significance and Use

3.1 Culvert and sewer joints, 24 inches (600 mm) or less in diameter, tested and approved in accordance with this MTM will be evaluated for placement on the Qualified Products List.

4. Apparatus

4.1 Testing may be carried out using either air pressure or hydrostatic pressure. Provide plugs capable of sealing the sewer or culvert test section for the appropriate test method.

4.2 The pressure gauge used, for either method, must have a range of 0 to 10 psi (70 kPa) gauge pressure. The gauge must read to the nearest 0.1 psi (0.7 kPa) with an accuracy of ±0.01 psi (0.1 kPa). Note that henceforth, units of pressure will refer to gauge pressure, unless otherwise noted.

4.3 The pressure test apparatus must include a 6.0-psi (40-kPa) pressure-relief device.

4.4 When testing plastic pipe, the pipe must be deflected five percent (5%) during the entire testing period to represent the maximum allowable deflection at the time of field installation. The apparatus described in ASTM F949 must be used to deflect the plastic pipe.

5. Test Section

5.1 The pipe section to be pressurized using the air or hydrostatic test procedure described in Section 6 must consist of two pipe segments each having a minimum length of four feet, properly connected in accordance with the watertight joint design.

5.2 Jointing procedures used in the laboratory must be readily adaptable for use in the field to allow verification testing.

5.3 The test section must be clean and free of debris at the time of testing.

6. Test Procedure

6.1 The test procedures presented have been adapted from ASTM field installation acceptance methods for hydrostatic (ASTM C969, C1091) and air pressure (ASTM C828, F1417) testing.

6.2 Hydrostatic Pressure Testing

6.2.1 Securely plug the ends of the test section to provide a watertight seal. Provide additional bracing to withstand the expected test pressure. Bracing must not create longitudinal compressive forces within the test section. One of the plugs must be fitted with an orifice through which water can be introduced into the test section. A water supply line must be fitted with suitable control valves and a pressure gauge allowing continuous monitoring of the hydrostatic pressure at the top of the pipe.

6.2.2 Photograph the test section in the test apparatus. Ensure that all photos include a timestamp. Take sufficient photos to show the assembled test section, bracing, and test apparatus. Photos of plastic pipe must show the test section deflected.

6.2.3 Fill the test section completely with water.

6.2.4 For concrete and clay pipe, the water filled test section is to stand for a minimum of four hours and a maximum of 72 hours to allow for water absorption by the pipe material. Refill the test section as necessary before continuing with testing.

6.2.5 Bring the hydrostatic pressure in the test section to 4.0 psi (28 kPa) and begin timing the test. Measure the leakage from the pipe joint while maintaining 4.0 psi (28 kPa) for 20 minutes.

6.3 Air Pressure Testing

6.3.1 Securely plug the ends of the test section to provide an airtight seal. Provide additional bracing to withstand the expected test pressure. Bracing must not create longitudinal compressive forces within the test section. One of the plugs must be fitted with an orifice through which air can be introduced into the test section. An air supply line must be fitted with suitable control valves and a pressure gauge allowing continuous monitoring of the air pressure.

6.3.2 Photograph the test section in the test apparatus. Ensure that all photos include a timestamp. Take sufficient photos to show the assembled test section, bracing, and test apparatus. Photos of plastic pipe must show the test section deflected.

6.3.3 Pressurize the pipe to 4.0 psi (28 kPa). Allow a minimum of two minutes for the air pressure to stabilize to between 3.5 psi (24 kPa) and 4.0 psi (28 kPa). If necessary, add air to the test section to maintain the pressure between 3.5 psi (24 kPa) and 4.0 psi (28 kPa).

6.3.4 After the air pressure has stabilized between 3.5 psi (24 kPa) and 4.0 psi (28 kPa), close the air supply valve so that no additional air may enter the test section.

6.3.5 Record the air pressure and begin timing the test. Record the time required for the air pressure to decrease 1.0 psi (7.0 kPa) (absolute).

7. Basis of Acceptance

7.1 Hydrostatic Pressure Verification

The method of jointing is considered acceptable when the leakage is less than or equal to 200 gallons per inch of inside diameter per mile per day (18.5 liters per millimeter of inside diameter per kilometer of pipe per day) at 4.0 psi (28kPa). Table 723-1 gives allowable leakage rates for a range of pipe diameters and pipe section lengths calculated using the acceptance criteria.

7.2 Air Pressure Verification

The method of jointing is considered acceptable when the time required for the air pressure to decrease 1.0 psi (7.0 kPa) (absolute) exceeds the minimum times listed in Table 723-2.

8. Report

8.1 Independent laboratory test reports must be submitted which document that a minimum of three passing tests (either three hydrostatic or three air pressure) have been performed for each type of pipe jointing system and each diameter of pipe being submitted for approval as a Qualified Product. All test results must be documented on the test reports submitted. If a test is cancelled before the test procedure is complete, the reason for that cancellation must be documented on the test reports submitted.

8.2 Each report must include the following information:

- timestamped photographs of pipe joint test section in the test apparatus
- pipe and joint component manufacturer's name
- specific product name(s)
- description of joint configuration
- material specification for each component
- the diameter of pipe joint tested
- standard pipe section length for pipe joint tested
- joint assembly procedure used in laboratory testing
- the date and location of testing
- observed leakage rate (hydrostatic) or time for 1.0 psi (7.0 kPa) absolute pressure drop (air)
- field assembly diagram sufficient to allow identification of all joint system components
- certification statement by authorized representative of independent laboratory if testing is conducted by manufacturer and independently witnessed.

TABLE 723-1

Maximum Leakage for Various Pipe Diameters and Standard Pipe Section Lengths for Twenty-Minute Test Interval		
Pipe Diameter in (mm)	Length of Pipe Section (1) ft (mm)	Allowable Leakage oz (L)
12 (300)	8 (2400)	6.5 (0.19)
	10 (3000)	8.1 (0.23)
	12 (3600)	9.7 (0.28)
	16 (4800)	12.9 (0.37)
	20 (6000)	16.2 (0.46)
15 (375)	8 (2400)	8.1 (0.23)
	10 (3000)	10.1 (0.29)
	12 (3600)	12.1 (0.35)
	16 (4800)	16.2 (0.46)
	20 (6000)	20.2 (0.58)
18 (450)	8 (2400)	9.7 (0.28)
	10 (3000)	12.1 (0.35)
	12 (3600)	14.5 (0.42)
	16 (4800)	19.4 (0.56)
	20 (6000)	24.2 (0.69)
24 (600)	8 (2400)	12.9 (0.37)
	10 (3000)	16.2 (0.46)
	12 (3600)	19.4 (0.56)
	16 (4800)	25.9 (0.74)
	20 (6000)	32.3 (0.93)
(1) Pipe section length refers to the full test section, which includes both joined pipe segments.		

TABLE 723-2

Minimum Time for 1.0 psi (7.0 kPa) Absolute Air Pressure Decrease for Various Pipe Diameters		
Pipe Diameter in (mm)	Thermoplastic Pipe (1) Elapsed Time (min:sec)	All Other Materials (2) Elapsed Time (min:sec)
4 (100)	3:46	0:18
6 (150)	5:40	0:42
8 (200)	7:34	1:12
10 (250)	9:26	1:30
12 (300)	11:20	1:48
15 (375)	14:10	2:06
18 (450)	17:00	2:24
21 (525)	19:50	3:00
24 (600)	22:40	3:36

(1) ASTM F1417
(2) ASTM C828

MICHIGAN TEST METHOD
FOR
SMOOTH-WALL COILABLE
POLYETHYLENE (PE) CONDUIT AND PIPE

1. Scope

1.1 This method covers the procedures for testing smooth-wall coilable polyethylene (PE) pipe and conduit for use as utilities duct or electrical conduit. The test procedures cover tests used to determine the physical dimensions and properties of all smooth-wall coilable polyethylene (PE) conduit and pipe submitted for approval. Tests specified in referenced documents but not covered in this test method will generally not be performed.

2. Referenced Documents

2.1 ASTM Standards:

D 1785 Specification for Poly (Vinyl Chloride)(PVC) Plastic Pipe, Schedules 40, 80, and120.

D 2122 Test Method for Determining Dimensions of Thermoplastic Pipe and Fittings.

D 3035 Specification for Polyethylene (PE) Plastic Pipe (DR-PR) Based on Controlled Outside Diameter.

D 3350 Specification for Polyethylene Plastics Pipe and Fittings Materials.

D 3485 Specification for Smooth-Wall Coilable Polyethylene (PE) Conduit (Duct) for Preassembled Wire and Cable.

2.2 NEMA Standards

TC 2 - 1983 Electrical Plastic Tubing (EPT) and Conduit (EPC-40 and EPC-80).

3. Equipment

3.1 Equipment shall be as described in ASTM D 2122, D 3485, D 1785 and NEMA TC2 - 1983 and documents referenced therein, except as modified herein.

4. Test Methods, Procedures and Specifications

4.1 *Dimensions* - This test is conducted according to ASTM D 2122 - 1990 except that out-of-roundness is not checked. Wall thickness and outside diameter dimensions shall conform to ASTM D 1785 for Schedule 40 and 80 material, or applicable special provision. No more than 3% deviation from the minimum wall thickness specification will be allowed. Wall thickness range shall be within 12% in accordance with ASTM D 3035.

4.2 *Crushing Resistance* - This test is conducted according to NEMA TC2 - 1983 except load requirements for wall thicknesses greater than Schedule 40 (ie. Sch. 80, DR 11, etc.) will be double the specified Schedule 40 load specification for the equivalent diameter of conduit or pipe.

4.3 *Impact Test* - Room Temperature Impact test is not conducted.

Low Temperature Impact test is conducted according to ASTM D 3485 except as follows:

a. Only samples 2 inch (50 mm) diameter and greater will be tested.

b. Three 6 V 0.2 inch (150 V 2 mm) specimens will be cut from each length of conduit or pipe included in the sample, and tested at low temperature 0 BF V 4 BF (-18 BC V 2 BC).

c. A 20 V 0.2 pound (9 V 0.1 kg) Type B tup will be dropped from a height of 10 feet (3 m), onto conduit and pipe specimens. The face of the tup should strike the center of the specimens once from the 10 foot (3 m) height, but may rebound and impact the specimen more than once. The material does not meet the requirements of this test method if any of the three (3) specimens tested cracks or tears.

4.4 *Workmanship* - Samples of conduit and pipe shall be visually inspected for finish and imperfections.

4.5 *Markings* - Samples of conduit shall be marked according to ASTM D 3485, and shall include a producer code. (Markings must include the designation AHDPE@ or AType III@).

4.6 *Couplings or Joints* - If couplings or joints are intended to be used with the material, examples of the couplings or joints made from the approved material must be submitted for inspection and/or testing. Two 1.5 V 0.01 feet (460 V 3 mm) length sections of each size of conduit or pipe shall be joined by whatever method will be used at the job site and submitted to the laboratory. One joint or coupling section shall be submitted for each job where they are used with the pipe or conduit. If tested, the test will be conducted according to NEMA TC 2 - 1983 (Axial Pull Test) except that the means of holding or gripping the ends of the test specimen during the test can be modified to accommodate existing laboratory equipment.

4.7 *Color and (UV) Stabilizer* - PE Conduit or Pipe covered by this test method must be produced from material with a color and UV stabilization designation code of C, D, or E as described in ASTM D 3350. All PE Conduit or Pipe covered by this test method, for use above ground shall be black in color.

MICHIGAN TEST METHOD
FOR
DETERMINING RIDE QUALITY USING
A CALIFORNIA TYPE PROFILOGRAPH

1. Scope

1.1 Ride quality of the pavement, expressed in inches per mile (mm/km), will be determined from a mechanically produced profilogram (trace) or from a computerized version of the California type profilograph.

2. Referenced Documents

2.1 *ASTM Standards*:
E 1274 Standard Test Method for Measuring Pavement Roughness Using a Profilograph.

2.2 MDOT Standards
MTM 727 Manual Analysis of California Type Profilograms

3. Equipment

3.1 A California type profilograph, which is either mechanical or computerized, will be used.

3.2 Mechanical profilographs will produce a profilogram with a true 1:1 vertical scale and a true 1:300 horizontal scaling. The profilogram will have roadway stations recorded thereon.

3.3 Computerized profilographs will produce a plot of the profile and a printout which will give the following data: stations every 100 feet (km), bump or dip height and length of specification, the blanking band width, date of measurement, overall inches per mile (mm per km) for that measurement, total length of that measurement, and the raw inches (mm) for each 528 foot (160 m) segment. Vertical displacement will be sampled every 3 inches (75 mm) or less along the roadway.

3.4 The profilometer must be capable of continuing linear measurement while suspending measurement of ride quality during passage over excluded sections. This exclusion can be accomplished by software, mechanical or electronic means.

4. Calibration

4.1 A manufacturer=s operating manual and a tire pressure gauge will be available at the site.

4.2 The calibration procedure for the mechanical machine will consist of profiling two replicate runs on a designated roadway of 1000 feet (300 m) in length. Horizontal calibration will be checked by running the profilograph over the 1000 foot (300 m) length and measuring the length of the resulting output on the profilogram. A 1000 foot

(300 m) run must produce 40 inches {+ 0.1 inch} (1 m { 3 mm}) of profilogram output. Vertical calibration will be checked by running the test wheel over a block of known thickness (usually 1 inch {25 mm}) and measuring the displacement it produces on the profilogram. There will be no visible tolerance allowed on the vertical calibration.

4.3 Calibration of the computerized versions will have a run made over a distance of a measured 1000 feet (300 m). The computer must print out a distance equal to the measured distance 3 feet (1 m). The vertical calibration will be as per the manufacturer's specification.

4.4 If the horizontal or vertical checks do not meet specifications, the machinery must be corrected. In addition to the calibration procedures, a visual inspection of the profilograph must be conducted. This would include condition of the test tire and bogie wheels, manufacturer=s recommended tire pressure, tracking of the paper on the spool and paper drum, condition of chains and cables, tracking of the device down the road, and general condition of the test device. This calibration procedure is the same for either type of profilograph.

5. Procedure

5.1 The limits of the pavement to be measured will be marked. The operator is responsible for starting the California type profilometer with the measuring wheel on the mark and ending on the mark at the end of the run.

5.2 Measure ride quality by operating the profilograph over the pavement to be measured. The location within the lane and the number of runs will be determined by applicable specifications. The equipment shall be operated within the speed range specified by the manufacturer for data collection.

5.3 Linear measurement shall be continued over areas excluded from ride quality measurement that lie within the overall limits of the pavement to be measured.

5.4 The pavement surface must be clean to obtain accurate measurements.

6. Manual Data Processing

6.1 The trace generated by a mechanical profilograph will be analyzed according to Michigan Test Method MTM 727.

7. Automated Data Processing

7.1 For computerized profilographs, the profile data will be bandpass filtered in the computer to remove all spatial wavelengths shorter than 2 feet (0.61 m) and longer than 110 feet (33.5 m). This will be accomplished by a third order, low pass Butterworth filter set at 2 feet (0.61 m) and a third order, high pass Butterworth filter set at 110 feet (33.5 m). The resulting band limited profile will then be computer analyzed according to the California Profilograph reduction process to produce the required inches per mile (mm/km) statistic. This will be accomplished by fitting a linear regression line to each 528 feet (160 m) of contiguous pavement section. This

corresponds to the perfect placement of the blanking bar by a human trace reducer. Scallops are then detected and totaled according to the California protocol outlined in Michigan Test Method MTM 727. Bump analysis will take place according to the California Profilograph reduction process outlined in Michigan Test Method MTM 727.

8. Report

8.1 For manual profilographs provide the trace with smoothing line, scallop heights, and bump locations. Also provide a summary sheet of the profile index.

8.2 For computerized profilographs, a copy of the official computer generated trace and printout will be submitted for project records and to determine the ride quality payment. Each run will be reported to the nearest 0.1 inch (0.5 mm).

8.3 Segments less than 528 feet (160 m) shall be prorated to a 528 foot (160 m) segment. Each run will be reported by the Contractor to the nearest 0.1 inch (0.5 mm).

MICHIGAN TEST METHOD
FOR
DETERMINING RIDE QUALITY
USING A GM TYPE RAPID TRAVEL PROFILOMETER

1. Scope

1.1 Ride quality of the pavement, expressed as RQI (Ride Quality Index) units, or California Profilograph units of inches/mile (mm/km), will be determined by proper reduction of the true profile obtained by a GM Type of Rapid Travel Profilometer.

2. Referenced Documents

2.1 *ASTM Standards*:
E 950 Standard Test Method for Measuring the Longitudinal Profile of Traveled Surfaces with an Accelerometer Established Inertial Profiling Reference.

5. Equipment

3.1 An automated profilometer, based on the General Motors Rapid Travel concept, will be used. The unit will produce a true profile for spatial wavelengths from 2 to 110 feet (0.61 to 33.5 m). The unit must also be able to generate the equivalent California Profilograph plot and values as well as locations of bumps or dips over the specified height. The unit will also be capable of producing a plot of the true profile with a range from 2 to 110 feet (0.61 m to 33.5 m) wavelengths.

3.2 The profilometer will produce a plot of the profile and a printout which will give the following data: stations every 100 feet (km), bump or dip height and length of specification, the blanking band width, date of measurement, overall inches per mile (mm per km) for that measurement, total length of that measurement, the raw inches (mm) for each 528 foot (160 m) segment, and the ride quality index for each 528 foot (160 m) segment and for the total run.

3.3 The profilometer must be capable of continuing linear measurement while suspending measurement of ride quality during passage over excluded sections. This exclusion can be accomplished by software, mechanical or electronic means.

6. Calibration

4.1 A manufacturer=s operating manual and tire pressure gauge will be available at the site.

4.2 The profilometer will be tested for overall operation by performing the "Bounce" test procedure included with the unit on the site prior to use. In addition, any other tests prescribed by the manufacturer will be performed on the site prior to use.

4.3 Horizontal measurement will be checked over a measured distance of 1000 feet (300 m) and will read within 3 feet (1 m) of the measured distance.

4.4 Vertical calibration will be as per the manufacturer's specification.

5. Procedure

5.1 The limits of the pavement to be measured will be marked. Measurement must start 16.25 feet (5 m) prior to the beginning of the pavement to be measured and end 16.25 feet (5 m) after the end of the pavement to be measured.

5.2 Measure ride quality by operating the profilometer over the pavement to be measured. The location within the lane and the number of runs will be determined by applicable specifications. The equipment shall be operated within the speed range specified by the manufacturer for data collection.

5.3 Linear measurement shall be continued over areas excluded from ride quality measurement that lie within the overall limits of the pavement to be measured.

5.4 The pavement surface must be clean and dry to obtain accurate measurements.

6. Automated Data Processing

6.1 The digitized profile will be internally processed by dividing it into three spatial wavelength bands by using third order Butterworth high and low pass filters. The three bands are 50 to 25 feet (15.2 to 7.6 m), 25 to 5 feet (7.6 to 1.5 m), and 5 to 2 feet (1.5 to 0.6 m). Variance of the profile in each band is then computed:

$$\frac{\sum (x - \bar{x})^2}{N}$$

Where x is an individual profile elevation, in inches (mm), for the band, is the average profile elevation value, in inches (mm) for the band, and N is the number of profile elevations measured in the band.

Where Var_i is the variance for band i.

i = 1 for 50 to 25 feet (15.2 to 7.6 m), i = 2 for 25 to 5 feet (7.6 to 1.5 m) and i = 3 for 5 to 2 feet (1.5 to 0.6 m).

RQI is then given by the formula:

$$RQI = 3.077 \ln (Var_1 \times 10^8) + 6.154 \ln (Var_2 \times 10^8) + 9.231 \ln (Var_3 \times 10^8) - 141.85$$

This provides a scale from 0 (a perfect road) to 100 (the roughest road).

7. Report

7.1 RQI will be calculated for each 528 foot (160 m) segment. Segments less than 528 feet (160 m) will be computed as partial segments at the beginning and end of excluded sections and at the end of a run.

7.2 The RQI for each run will be reported, to one decimal place (e.g., 48.6).

7.3 A copy of the computer generated trace is to be provided as well as a printout with numerical values.

MICHIGAN TEST METHOD
FOR
MANUAL ANALYSIS OF CALIFORNIA
TYPE PROFILOGRAMS

1. Scope

1.1 This method describes procedures to determine pavement riding quality, in terms of a Profile Index, from a profilogram produced by a California type 25 foot (7.6 meter) profilograph.

1.2 Operation of the profilograph and areas to be tested shall be in accordance with Michigan Test Method 725, Michigan Test Method 726 or Supplemental Specification.

1.3 The 25 foot (7.6 meter) profilograph is a rolling straight edge which measures vertical deviations from a moving 25 foot (7.6 meter) reference plane. The pavement profile is graphically recorded on a profilogram on a scale of 1:300 longitudinally and 1:1 vertically. The Profile Index is determined from the profilogram by measuring and summing "scallops" that appear outside of a "blanking band" and is reported in inches per mile (millimeters per kilometer). Individual bumps requiring removal are located by use of a special bump template.

2. Apparatus

2.1 Profilogram produced by a 25 foot (7.6 meter) California type profilograph on plain white chart paper.

2.2 Processing template (see Figure 1) which is a clear plastic scale 21.1 inches (536 mm) long representing a pavement length of 528 feet (160 meters or 0.16 kilometers) at a scale of 1:300. At the center of the scale is an opaque band (blanking band) of specified width extending the entire 21.1 inches (536 mm) in length. On either side and parallel to the blanking band are scribed lines 0.1 inches (2.5 mm) apart. These lines serve as a convenient scale to measure deviations of the profile trace above or below the blanking band which are called "scallops".

2.3 Bump template (see Figure 1) which is a clear plastic template having a line 1 inch (25 mm) long scribed on one face with a scribed mark at either end and a slot or edge located a specified height from and parallel to the scribed line. The 1 inch (25 mm) line corresponds to a distance of 25 feet (8 meters) on the profilogram.

2.4 Ink pen with red ink or other color contrasting to the profile trace.

2.5 Calculator.

2.6 Scale or ruler.

2.7 Reporting form (see Figure 5).

3. Procedure

3.1 Preparation of the profilogram for analysis. This is done by drawing a "smoothing line" through the recorded profile using the red (or other contrasting color pen) (see Figure 2). This smoothing line removes high frequency deviations from the trace caused by texture, debris, or bouncing of the follower wheel. Care should be taken in drawing the smoothing line to remove only the high frequency deviations.

3.2 Detection of isolated bumps requiring removal (see Figure 3). This process identifies and locates bumps exceeding a specified height which are required to be removed by grinding. At each prominent bump or high point on the profile trace, place the bump template so that the scribe marks at each end of the scribed line intersect the profile trace to form a chord across the base of the peak or indicated bump. The line on the template need not be horizontal. A line is then drawn in the slot (or along the edge). Any portion of the profile trace (smoothed line) extending above this line indicates the approximate length and height of the bump exceeding specifications. In instances when the distance between recognizable low points is less than 25 feet (8 meters), a shorter chord length, tangent to the trace at the low points, can be used. It is the intent of this requirement however that the baseline for measuring the height of bumps will be as nearly 25 feet (8 meters) as possible but in no case will exceed this value. When the distance between prominent low points is greater than 25 feet (8 meters), the ends of the scribed line should intersect the profile trace with the scribed line in a nearly horizontal position.

3.3 Determination of Profile Index - Begin evaluating each trace for a lane from the same point on the road so that segments representing the same length of road can be aligned on the report form. Processing should always proceed in the direction the trace was produced. Place the processing template over the profile trace such that the blanking band covers as much as the trace as possible (see Figure 4). When this is done the scallops above and below the blanking band will be approximately balanced. When going around superelevated curves, the profile trace may move from a generally horizontal position making it impossible to blank out a significant length of the trace. If this occurs, the trace should be broken into short sections and the template repositioned on each segment (see Figure 4). When the template is properly positioned, outline the ends of the template to facilitate alignment of the template on the next 528 feet (0.16 km) segment.

Measure and total the height of all scallops appearing above and below the blanking band, measuring each scallop to the nearest 0.05 inch (0.1 millimeter). Round down as well as up. Do not count a scallop as 0.05 inches (0.1 mm) just because you see the smoothed profile line. Short sections of the profile may be visible outside the blanking band, but unless they project 0.3 inches (0.8 mm) or more vertically and extend 0.1 inches (2 mm) or more longitudinally, they are not counted. Single spikes are not counted, double peaked scallops are only counted once as the highest peak. When a scallop occurs at the end of the template, count the scallop only once and in the segment where the peak is highest. Sum the measurements of all scallops in each 528 foot (0.16 km) segment and write the total on the profilogram near the center of the segment and circle it.

The last segment counted is generally not an even 528 feet (0.16 kilometers) and the length must be measured. If the length is less than 264 feet (0.80 kilometers), it should be added to the previous section. If greater than 264 feet (0.80 kilometers) but less than 528 feet (0.16 kilometers), the segment will be evaluated alone based on its actual length.

The Profile Index in "inches per mile (millimeters per kilometer)" for a single trace is computed by dividing the total accumulated heights of the individual scallops (measured roughness) by the total length of the trace in miles (kilometers).

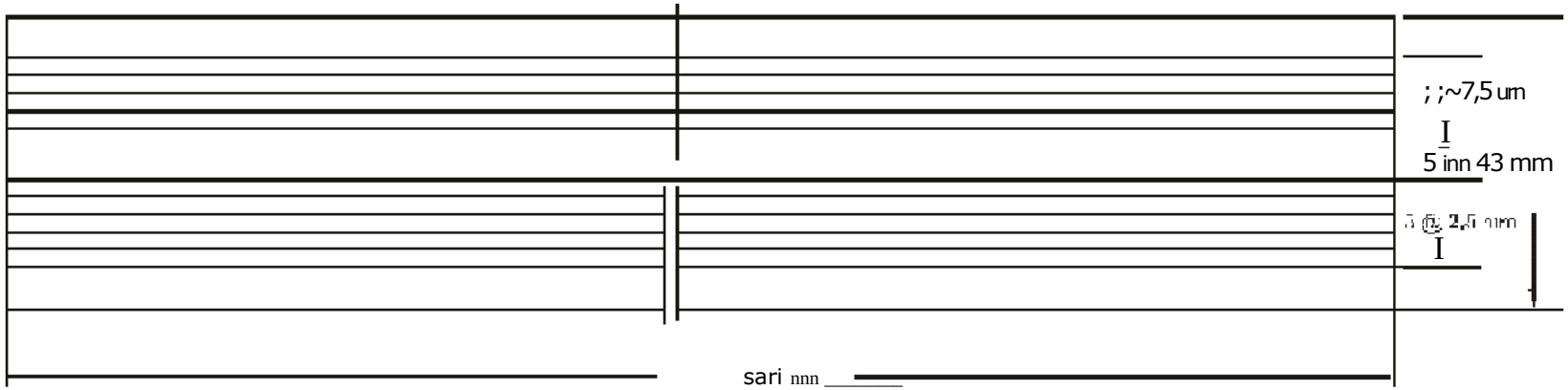

.!5 mai equals D;16. kin at a Scale o1 1:300

S

Processing Template

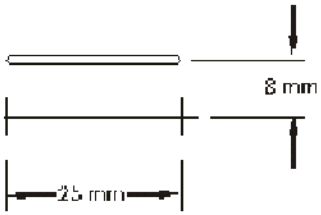

THIS SIDE UP

Pimp Template

Figure 1

lvNively'veo\P

RAW PROFILE

RAW PROFILE WITH SMOOTHING LINE

Figure 2

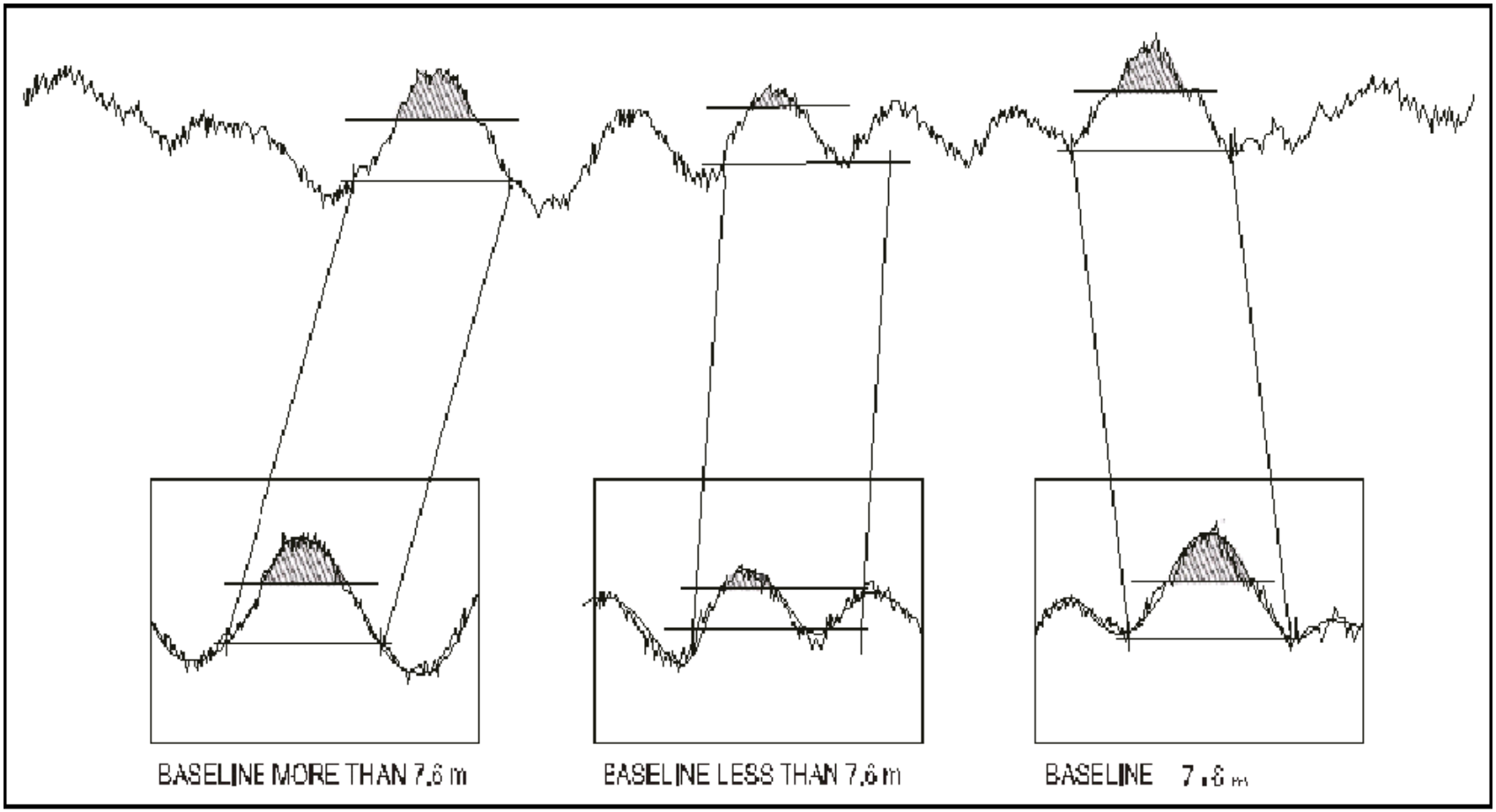

Figure 3

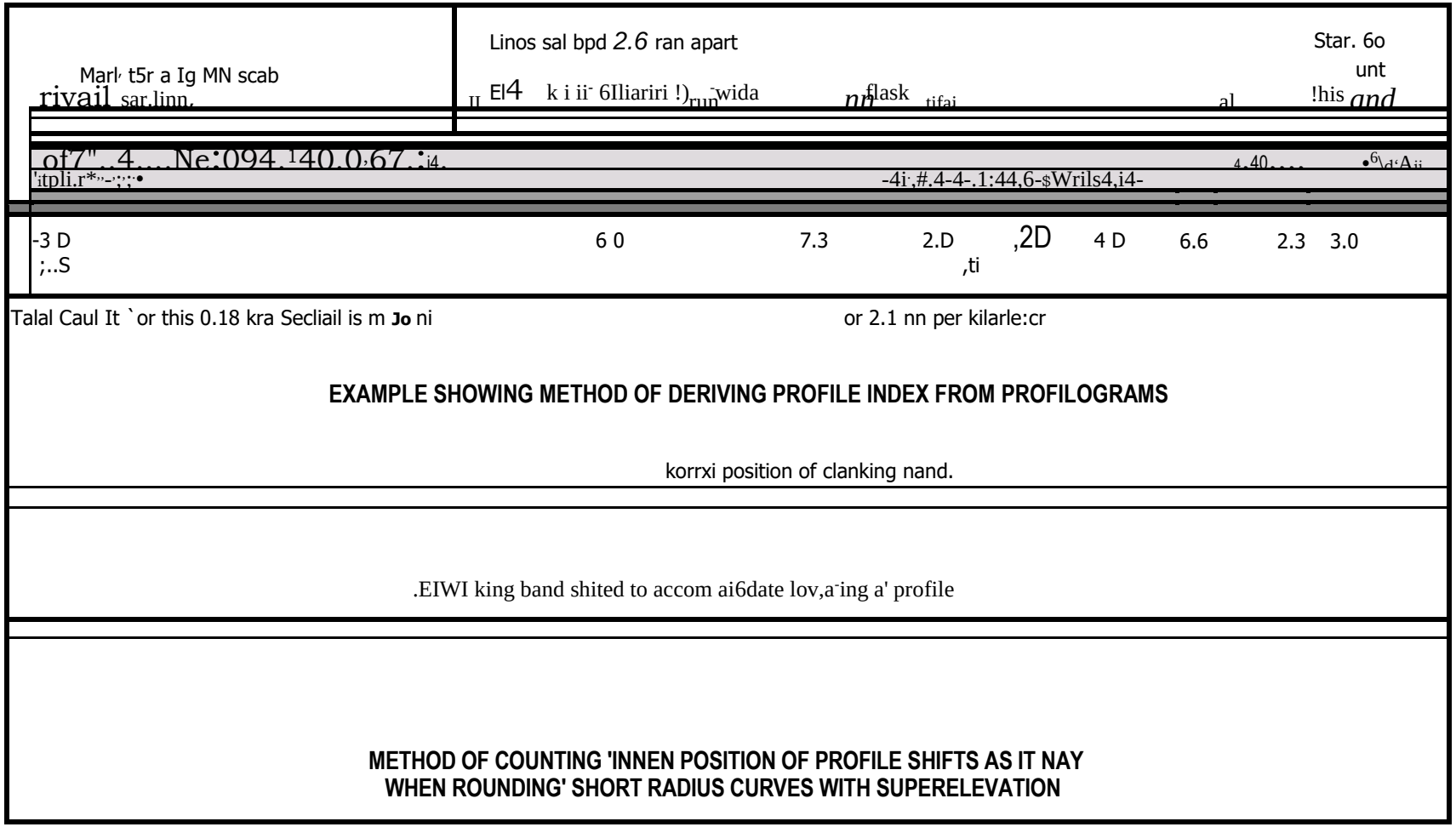

Figure 4

NOTE: This example is in Metric units only and is the same for English units

Form _____ /2001 MICHIGAN DEPARTMENT OF TRANSPORTATION

RIDE QUALITY DETERMINATION
****
25 Foot (7.6) Meter California Profilograph

PROJECT INFORMATION
CONTROL SECTION _____
JOB NUMBER _____
ROUTE_____
PAGE_____ OF_____

CONTRACTOR _____
PROFILE RUN BY DATE_____/____/____
PROFILE PROCESSED BY DATE / /_____

LANE _____

OUTSIDE WHEELTRACK			INSIDE WHEELTRACK		
LENGTH, MILES (KILOMETERS)	MEASURED ROUGHNESS, MILES (KILOMETERS)	PROFILE INDEX, INCHES/MILE (mm/km)	LENGTH, MILES (KILOMETERS)	MEASURED ROUGHNESS, MILES (KILOMETERS)	PROFILE INDEX, INCHES/MILE (mm/km)
TOTALS					
LANE TOTAL		_____ + _____		= _____ in/mi (mm/km)	

Figure 5.

MICHIGAN TEST METHOD
FOR
CORRUGATED POLYVINYL CHLORIDE (PVC) PIPE
AASHTO M 304

1. Scope

1.1 This test method describes the procedures for testing AProfile Wall Drain Pipe@ (Smooth-Wall Corrugated PVC Pipe) (CPV) for use as Class 1 Storm Sewers as specified in the 1996 Standard Specifications for Construction. The test procedures cover tests used to determine the physical dimensions and properties of CPV pipe submitted for approval and are not intended for quality control or simulated service testing. Tests specified in referenced documents but not covered in this test method will generally not be performed. (Pipe designated as ASTM F 949 may also be acceptable for uses where AASHTO M 304 pipe is specified. In this case ASTM F 949 pipe will be tested according to the provisions of this test method).

2. Referenced Documents

2.1 AASHTO Standards:

M 304 Specification for Poly (Vinyl Chloride) (PVC) Profile Wall Drain Pipe And Fittings Based on Controlled Inside Diameter.

M 294 Standard Specification for Corrugated Polyethylene Pipe 300 to 1200 mm Diameter.

2.2 ASTM Standards

D 2122 Test Method for Determining Dimensions of Thermoplastic Pipe and Fittings.

D 2412 Test Method for Determination of External Loading Characteristics of Plastic Pipe by Parallel Plate loading.

D 2424 Test Method for Impact Resistance of Thermoplastic Pipe and Fittings by Means of a Tup (Falling Weight).

F 949 Standard Specification for Poly (Vinyl Chloride) (PVC) Corrugated Sewer Pipe With a Smooth Interior and Fittings.

2.3 Michigan Test Method

MTM 723 Water Tightness Testing of Culvert and Sewer Joints up to 24 Inches (600 mm) in Diameter.

3. Equipment

3.1 Equipment will be as described in ASTM D 2122, D 2412, D 2424 and documents referenced therein, except as modified herein.

4. Sampling

4.1 Sampling will be performed at the frequency stated in the Materials Quality Assurance Manual - Section G. When a quantity of pipe requires more than one sample, each length of pipe sampled will be termed a sub-sample.

5. Test Methods, Procedures and Specifications

5.1 *Conditioning* - Condition specimens for a minimum of 4 hours in air at 23 BC V 2 BC. Test the specimens at 23 BC V 2 BC.

5.2 *Workmanship* - Samples will be visually inspected for finish and imperfections prior to preparation of specimens for testing and shall meet the requirements of AASHTO M 304.

5.3 *Dimensions* - This test is conducted according to ASTM D 2122 except that out-of-roundness is not checked. Dimensions shall conform to AASHTO M 304, or applicable special provision. Waterway wall thickness may deviate by 3% thinner than the minimum specification.

5.4 *Pipe Stiffness* - This test is conducted according to ASTM D 2412. Specimens will be oriented in the testing machine as described in AASHTO M294. The inside diameter dimension employed in this test will be taken at the point of orientation.

5.5 *Flattening* - This test will be conducted on the same specimens using the same orientation, and inside diameter dimension that was used when performing the pipe stiffness test. Rate of loading will be as stated in AASHTO M 304.

5.6 *Impact Resistance* - Impact Resistance test will be conducted according to AASHTO M 304 except: Three impact test specimens will be tested per sample/sub-sample. There will be one impact test done on each impact test specimen. A substitute tup weight and drop height may be used to achieve the specified impact force. Orient the specimens so the that one of the ribs receives the strike essentially centered on the tup face. Material may be rejected if any impact test specimen fails as defined in AASHTO M 304.

5.7 *Markings* - Samples shall be marked according to AASHTO M 304 (or ASTM F 949).

5.8 *Watertight Joints* - Unassembled joint and gasket assemblies shall be submitted with the sample for visual inspection. Qualification of the specific watertight joint system, and inclusion of the watertight system on the Qualified Products List by the Construction & Technology Division will be according to MTM 723.

MICHIGAN TEST METHOD
FOR
CERTIFICATION OF CALIFORNIA
TYPE PROFILOGRAPHS

11 Scope

1.1 Profilographs used to determine measure ride quality for possible incentive payment shall be certified as functional and accurate by MDOT.

2. Referenced Documents

2.1 ASTM Standards:

E 1274 Standard Test Method for Measuring Pavement Roughness Using a Profilograph
E 1364 Standard Test Method for Measuring Road Roughness by Static Level Method

2.2 MDOT Publications:

MTM 727 Michigan Test Method for Manual Analysis of California Type Profilograms

3. Equipment

3.1 The Contractor shall transport the profilograph to the test site designated by MDOT, and will provide all personnel and supplies need to operate the profilograph and record the results. MDOT will supply the height calibration blocks.

4. Test Site

4.1 MDOT will provide a pavement test site to be used for certification of profilographs. The test site will be at least 528 feet (160 m) long. The reference pavement profile will be determined with a rod and level in conformance with ASTM E 1364. A white stripe will be placed on the pavement at a uniform offset from the line to be profiled. Starting and ending locations will also be identified with pavement markings.

5. Certification Overview

5.1 The certification process will consist of four separate procedures: height measurement verification, distance measurement verification, profile elevation accuracy and repeatability, and accuracy and repeatability of the ride index calculation. Each of these four procedures must be successfully completed for certification to be given.

6. Procedure

Note: Operating the profilograph and printing out results will be the responsibility of the equipment owner. Analysis of the data will be done by MDOT. Prior to starting the certification procedure, assemble the profilograph and turn on any electronics and/or computers to allow time for them to warm up to normal operating temperature. Check to see that the tire(s) are inflated to the manufacturer=s recommended pressure. Adjust tire pressure if needed.

6.1 Height Measurement Verification: Place the profilograph in a relatively level area. Place gage blocks of 0.5 inches (10 mm) and 1.5 inches (40 mm) under the surface sensing wheel. Record the height measured by the profilograph. Each reading must be within +/- 0.02 inches (0.5 mm) of the actual thickness of the blocks.

6.2 Distance Measurement Verification: Measure the profile of the test section five times and print out profiles of each run. For computerized profilographs, record the measured distance. The average error of the five distance measurements must be less than +/- 0.5% of the actual length of the test section. For mechanical profilographs, measure the length of each trace. The average error of the five trace lengths must be less than +/- 0.5% of the actual length of the test section divided by 300.

6.3 Profile Elevation Accuracy: From the five profiles, select 15 bumps or dips that appear on the profiles with a height or depth greater than 0.2 inches (5 mm). Record the height or depth of these same 15 bumps or dips from each of the five profile plots. Determine the average and standard deviation for the height or depth of each bump/dip. The average of these standard deviations must be less than 0.2 inches (5 mm).

Plot a California profilograph style plot from the rod and level survey data in accordance with the mathematical model outlined in Chapter 6 of the FHWA publication *Development of Procedures for the Calibration of Profilographs*. Determine the height or depth of the same 15 bumps/dips that were measured previously. Determine the bias for each measurement by subtracting the rod and level value from the averages computed for the 5 test runs. The overall bias will be the summation of the absolute value of each individual bias divided by 15 (the number of points selected). The overall bias must be less than 0.2 inch (5 mm).

6.4 Accuracy and Repeatability of Ride Index Calculation: Record the Profile Index (PI) value for each of the 5 test runs and determine the average and standard deviation. Determine the PI from the rod and level profile in accordance with MTM 727. The standard deviation for the 5 runs must be within 1.0 inch per mile (16 mm/km). The average PI from the 5 test runs must be within +/- 2.0 inches per mile (32 mm/km) of the PI calculated from the rod and level measurements.

7. Certification

7.1 Profilographs that meet all the criteria listed in section 6 will be certified by MDOT for use in measuring ride quality. A sticker will be placed on the profilograph indicating the date that the certification expires.

7.2 Certifications shall be valid for a maximum of one year. Profilographs must be re-certified after undergoing any major component repairs or replacements. Major component repairs or replacements include, but are not limited to, work on the following:

- the frame, wheels or bearings of the profilograph.
- the height sensor or associated hardware.
- the chart recorder on manual profilographs.
- the computer or electronics on computerized profilographs.
- software upgrades.

Minor adjustments to the equipment can be made to the equipment without undergoing re-certification provided that the adjustments do not affect profile measurement or computation of profile indices. Minor adjustments include, but are not limited to, the following:

- inspecting, re-soldering, or replacing electronic connections.
- cleaning components, normal adjustments as required by the manufacturer.
- setting software parameters and/or scale factors in accordance with specifications.

MICHIGAN TEST METHOD
FOR
CERTIFICATION OF PROFILOMETERS

1. Scope

1.1 Profilometers used to measure ride quality for possible incentive payment shall be certified as functional and accurate by MDOT.

2. Referenced Documents

2.1 ASTM Standards:

E 950 Standard Test Method for Measuring the Longitudinal Profile of Traveled Surfaces with an Accelerometer Established Inertial Profiling Reference.

E 1926 Standard Practice for Computing International Roughness Index of Roads from Longitudinal Profile Measurements.

E 13649 Standard Test Method for Measuring Road Roughness by Static Level Method

2.2 FHWA Publications:

Development of Procedures for the Calibration of Profilographs (Publication No. FHWA-RD-89-110)

3. Equipment

3.1 The Contractor shall transport the profilometer to the test site designated by MDOT, and will provide all personnel, fuel and supplies need to operate the profilometer and print out the results. MDOT will supply the height calibration blocks and a guide wheel or camera to assist with alignment of the profilometer over the correct path on the test road.

4. Test Site

4.1 MDOT will provide a pavement test site to be used for certification of profilometers. The test site will be at least 528 feet (160 m) long. The reference pavement profile will be determined with a rod and level in conformance with ASTM E 1364. A white stripe will be placed on the pavement at a uniform offset from the line to be profiled. Starting and ending locations will also be identified with pavement markings.

5. Certification Overview

5.1 The certification process will consist of five separate procedures: height measurement verification, system verification with a bounce test, distance measurement verification, profile elevation accuracy and repeatability, and accuracy and repeatability of ride index calculation. Each of these five procedures must be successfully completed for certification to be given.

6. Procedure

Note: Operating the profilometer and printing out results will be the responsibility of the equipment owner. Data analysis will be done by MDOT. Prior to starting the certification procedure, attach the guide wheel or camera to the profilometer and allow the operator to do several runs on the test site to warm up the equipment and allow the operator to get used to steering using the guide wheel or camera.

6.1 Height Measurement Verification: Park the profilometer in a level area. Place the equipment onto an operating mode that displays height measurements. Place a flat metal plate on the ground below the height sensor and take initial readings. Place three different calibration blocks {three blocks with 3 different thicknesses between 0 and 1 inch (0 and 25mm)} under the sensor and record the measured height reading for each block. Each reading must be within +/- 0.01 inches (0.2mm) of the actual thickness of the blocks.

6.2 System Verification: Perform two bounce tests. The first shall be done in accordance with the manufacturer=s instructions, and the equipment must pass any criteria established by the manufacturer. The second bounce test will be done in a mode where a paper trace can be made of the test. (Note: this can be done on some machines by accessing an internal clock via software. On other machines, the wheel encoder must be externally driven.) The magnitude of any profile shown on the paper trace must be less than 1.0 % of the vehicle bounce amplitude.

6.3 Distance Measurement Verification: Check to see that the vehicle=s tires are inflated to the manufacturer=s recommended pressures. Adjust pressure if needed. Calibrate the distance measuring device. Then measure the length of the test site three times. The average error of the three distance measurements must be less than +/- 0.1% of the actual length of the test section.

6.4 Profile Elevation Accuracy and Repeatability: Measure the profile of the test section ten times and print out California profilograph style profiles of each run. Select 15 bumps or dips that appear on the profiles with a height or depth greater than 0.2 inches (5 mm). Record the height or depth of these same 15 bumps or dips from each of the ten profile plots. Determine the average and standard deviation for the height or depth of each bump/dip. The average of these standard deviations must be less than 0.1 inches (2.5 mm).

Plot a California profilograph style plot from the rod and level survey of the test site in accordance with the mathematical model outlined in Chapter 6 of the FHWA publication *Development of Procedures for the Calibration of Profilographs*. Determine the height or depth of the same 15 bumps/dips that were measured previously. Determine the bias for each measurement by subtracting the rod and level value from the value measured on each of the 10 test runs. The overall bias will be the summation of the absolute value of each individual bias divided by 15 (the number of points selected). The overall bias must be less than 0.1 inch (2.5 mm).

6.5 Accuracy and Repeatability of Ride Index Calculation: Record the International Roughness Index (IRI) value for each of the 10 test runs and determine the average and standard deviation. Determine the IRI for the rod and level data in accordance with ASTM E 1926. The standard deviation for the 10 runs must be within +/- 2 inches per mile (50 mm/km). The average IRI from the ten test runs must be within +/- 5 inches per mile (200 mm/km) of the IRI calculated from the rod and level measurements.

Note: International Roughness Index has been selected for this certification process because it is a nationally accepted ride index and equations are readily available for calculating IRI from profiles generated by both rod and level measurements and from profilometers. It is generally accepted that a profilometer correctly calculating one ride index will properly calculate other ride indices provided the machine=s software computations have been verified.

7. Certification

7.1 Profilometers that meet all the criteria listed in section 6 will be certified by MDOT for use in measuring ride quality. A sticker will be placed on the profilometer indicating the date that the certification expires.

7.2 Certifications shall be valid for a maximum of one year. Profilometers must be re-certified after undergoing any major component repairs or replacements. Major component repairs or replacements include, but are not limited to, changes to the following:

- the accelerometer or associated hardware.
- the height sensor or associated hardware.
- the distance measuring unit and associated hardware.
- any printed circuit board necessary for the collection of raw sensor data or the processing of profiles or ride indices.
- the computer.
- software upgrades.

Minor adjustments to the equipment can be made to the equipment without undergoing re-certification provided that the adjustments do not affect profile measurement or computation of profile indices. Minor adjustments include, but are not limited to, the following:

- inspecting, re-soldering, or replacing connectors.
- cleaning components, normal adjustments to voltage levels as required by the manufacturer.
- setting software parameters and/or scale factors in accordance with specifications.