MICHIGAN ELECTRIC UTILITY

Generator Interconnection Requirements

Projects with Aggregate Generator Output Under 30 kW

Effective _____

INTRODUCTION

This Generator Interconnection Requirements document outlines the process, requirements, and agreements used to install or modify generation projects with aggregate generator output capacity ratings less than 30 kW and designed to operate in parallel with the Utility electric system. Technical requirements (data, equipment, relaying, telemetry, metering) are defined according to type of generation, location of the interconnection, and mode of operation (Flow-back or Non-Flow-back). The process is designed to provide an expeditious interconnection to the Utility electric system that is both safe and reliable.

This document has been filed with the Michigan Public Service Commission (MPSC) and complies with rules established for the interconnection of parallel generation to the Utility electric system in the MPSC Order in Case No. U-13745.

The term "Project" will be used throughout this document to refer to a merchant plant and other electric generating equipment and associated facilities that are not owned or operated by an electric utility. The term "Project Developer" means a person that owns, operates, or proposes to construct, own, or operate, a Project.

This document does not address other Project concerns such as environmental permitting, local ordinances, or fuel supply. Nor does it address agreements that may be required with the Utility and/or the transmission provider, or state or federal licensing, to market the Project's energy. An interconnection request does not constitute a request for transmission service.

It may be possible for the Utility to adjust requirements stated herein on a case-by-case basis. The review necessary to support such adjustments, however, may be extensive and interfere with study fees and the project schedule established by the MPSC and addressed in these requirements. Therefore, if requested by the Project Developer, adjustments to these requirements will only be considered if the Project Developer agrees in advance to compensate the Utility for the added costs of the necessary additional reviews and to also allow the Utility additional time for the additional reviews.

The Utility may apply for waiver from one or more provisions of these rules and the MPSC may grant a waiver upon a showing of good cause.

CONTENTS

INTERCONNECTION PROCESS 1

Interconnection Application 1
Interconnection Study 2
Interconnection and Operating Agreement 2
Project Design and Construction 2
Ongoing Operations 2

TECHNICAL REQUIREMENTS 3

Major Component Design Requirements 3
Data 3
Isolating Transformer(s) 3
Isolation Device 3
Interconnection Lines 4

Relaying Design Requirements 4
Momentary Paralleling 4
Automatic Reclosing 4
Single-Phase Sectionalizing 4

Specific Requirements by Generator Type 5
Synchronous Projects 5
Induction Projects 5
Inverter-Type Projects 5
Relay Setting Criteria 5
Maintenance and Testing 5
Installation Approval 5

Miscellaneous Operational Requirements 6
Operating in Parallel 6
Reactive Power Control 7
Site Limitations 7

Revenue Metering Requirements 7
Non-Flow-back Projects 7
Flow-back Projects 8

Communication Circuits 8

CONTENTS

APPENDIX A INTERCONNECTION APPLICATION
APPENDIX B SYNCHRONOUS AND INDUCTION GENERATORS - REQUIRED DATA
APPENDIX C INVERTER-TYPE GENERATORS - REQUIRED DATA
APPENDIX D INTERCONNECTION STUDY AGREEMENT
APPENDIX E INTERCONNECTION AND OPERATING AGREEMENT
APPENDIX F CONTACT LIST

INTERCONNECTION PROCESS

The Interconnection Process

This section outlines the process for interconnecting Projects with aggregate output less than 30 kW to the Utility electric system. This includes both new Projects and modifications to existing Projects. The general process is shown in Figure 1.

The Utility is required to complete all of its obligations for interconnection of the Project to the Utility system within 2 weeks from the time a complete Interconnection Application is received by the Utility.

A completed Interconnection Application consists of an application, data (Appendix B or C), and filing fee.

Delays that are the responsibility of the Project Developer or attributable to the time lapse while the Utility diligently seeks to secure necessary rights-of-way, governmental permitting, zoning requirements, etc, will not be counted in the time to meet the 2 week deadline. The Utility shall have no responsibility to pursue court action to obtain these items.

Interconnection Application

The Project Developer must first submit an Interconnection Application to the Utility. A separate application is required for each Project or Project site. A blank Interconnection Application can be found in Appendix A. A list of the required interconnection data, depending on the capacity rating and type of generation, can be found in Appendices B and C.

A complete submittal of required interconnection data and filing fee of $100 must accompany the Interconnection Application. The Utility will notify the Project Developer within 3 business days of receipt of an Interconnection Application. If any portion of the Interconnection Application, data submittal, or filing fee is incomplete and/or missing, the unapproved Interconnection Application will be sent back to the Project Developer with the deficiencies clearly identified.

Once the Utility has accepted an Interconnection Application, the Project is assigned a position in the Project queue maintained by the Utility. The Project position in the Project queue is determined by the date the Utility received the accepted Interconnection Application. The Utility will provide the Project Developer up to two hours of consultation related to the Project's interconnection to the Utility system and will include a good faith estimate of the Utility's charges to complete the

Figure 1: The Interconnection Process

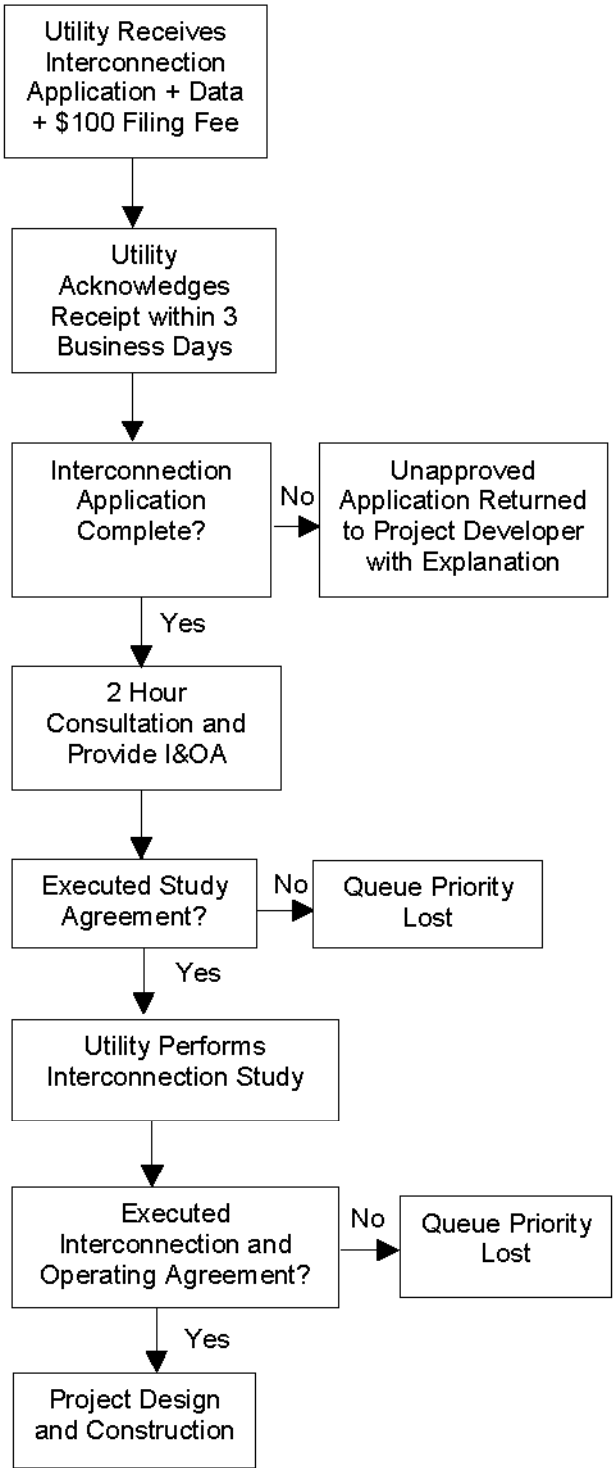

interconnection, including the estimated study fees, based on the information available to the Utility at that time.

Interconnection Study

The Utility will perform an Interconnection Study to determine the impact of the Project on the Utility's system, and the Utility system modifications required for safe and reliable interconnection of the Project to the Utility's system. The Project Developer is required to sign the Interconnection Study Agreement found in Appendix D and is encouraged to return the signed Interconnection Study Agreement to the Utility with the completed Interconnection Application to avoid delays in the interconnection process. Any delay in execution of the Interconnection Study Agreement will not toll the interconnection deadlines.

The Utility will charge the Project Developer for the costs associated with completion of the Interconnection Study. The costs will not exceed the lesser of either of the following:

(1) Five percent of the estimated total cost of the Project, or

(2) $10,000

Interconnection Study fees are not required if the Interconnection Study determines that the Project's aggregate export capacity is less than 15% of the line section peak load and the project does not contribute more than 25% of the maximum short circuit current at the Point of Common Coupling (PCC) as defined by IEEE 1547.

It is typical for Projects less than 30 kW to be less than 15% of the line section peak load and less than 25% of the maximum short circuit current at the PCC.

Interconnection and Operating Agreement

The Utility will submit an Interconnection and Operating Agreement (I&OA) to the Project Developer, as soon as practical, after the 2 hour consultation described earlier. A sample Interconnection and Operating Agreement can be found in Appendix E.

The Interconnection and Operating Agreement will cover matters customarily addressed in such agreements in accordance with Good Utility Practice, including, without limitation, construction of facilities, system operation, interconnection cost and billing, defaults and remedies, insurance, and liability. All Utility costs associated with making modifications to its distribution system will be paid by the Project Developer.

Any delay in execution of the Interconnection and Operating Agreement will not count toward the interconnection deadlines.

Project Design and Construction

After the Interconnection and Operating Agreement is executed, the Utility will proceed to acquire necessary rights-of-way, procure required equipment, and design and construct the Interconnection Facilities.

Ongoing Operations

The Project Developer and Utility will exchange contact information and update this information from time to time. A sample Contact List can be found in Appendix F.

TECHNICAL REQUIREMENTS

Technical Requirements

The following discussion details the technical requirements for interconnection of Projects less than 30 kW. For Projects within this capacity rating range, the Utility has made a significant effort to simplify the technical requirements. This effort has resulted in adoption of IEEE Std. 1547, Standard for Interconnecting Distributed Resources with Electric Power Systems, being incorporated herein by reference.

Certain requirements, as specified by this document, must be met to provide compatibility between the Project and the Utility's electric system, and to assure that the safety and reliability of the electric system is not degraded by the interconnection.

Upgraded revenue metering may be required for the Project.

Major Component Design Requirements

The data requested in Appendix B or C, for all major equipment and relaying proposed by the Project Developer, must be submitted as part of the initial application for review and approval by the Utility. The Utility may request additional data be submitted as necessary during the study phase to clarify the operation of the Project.

Once installed, the interconnection equipment must be reviewed and approved by the Utility prior to being connected to the Utility's electric system and before Parallel Operation is allowed.

Data
The data that the Utility requires to evaluate the proposed interconnection is documented on a "fill in the blank" checklist by generator type in Appendices B and C.

A site plan, one-line diagrams, and interconnection protection system details of the Project are required as part of the application data. The generator manufacturer supplied data package should also be supplied.

Isolating Transformer(s)
If a Project Developer installs an isolating transformer, the transformer must comply with the current ANSI Standard C57.12.

The type of generation and electrical location of the interconnection will determine the isolating transformer connections. Allowable connections are detailed in the "Specific Requirements by Generator Type" section. Note: Some Utilities do not allow an isolation transformer to be connected to a grounded Utility system with an ungrounded secondary (Utility side) winding configuration, regardless of the Project type. Therefore, the Project Developer is encouraged to consult with the Utility prior to submitting an application.

Isolation Device
After review, this device may not be required by the Utility. If required and/or installed, this device would be placed at the Point of Common Coupling (PCC). It can be a circuit breaker, circuit switcher, pole top switch, load-break disconnect, etc., depending on the electrical system configuration. The following are required of the isolation device:

- Must be approved for use on the Utility system.
- Must comply with current relevant ANSI and/or IEEE Standards.
- Must have load break capability, unless used in series with a three-phase interrupting device.

TECHNICAL REQUIREMENTS

- Must be rated for the application.
- If used as part of a protective relaying scheme, it must have adequate interrupting capability. The Utility will provide maximum short circuit currents and X/R ratios available at the PCC upon request.
- Must be operable and accessible by the Utility at all times (24 hours a day, 7 days a week)
- The Utility will determine if the isolation device will be used as a protective tagging point. If the determination is so made, the device must have a visible open break, provisions for padlocking in the open position and it must be gang operated. If the device has automatic operation, the controls must be located remote from the device.

Interconnection Lines
Any new line construction to connect the Project to the Utility's electric system will be undertaken by the Utility at the Project Developer's expense.

Relaying Design Requirements

Regardless of the technology of the interconnection, for simplicity for all Projects in this capacity rating range, the interconnection relaying system must be certified by a nationally recognized testing laboratory to meet IEEE Std. 1547. The data submitted for review must include information from the manufacturer indicating such certification, and the manufacturer must placard the equipment such that a field inspection can verify the certification.

A copy of this standard may be obtained (for a fee) from the Institute of Electrical and Electronics Engineers (www.ieee.org).

Momentary Paralleling
For situations where the Project will only be operated in parallel with the Utility's electric system for a short duration (100 milliseconds or less), as in a make-before-break automatic transfer scheme, no additional relaying is required. Such momentary paralleling requires a modern integrated Automatic Transfer Switch (ATS) system, which is incapable of paralleling the Project with the Utility's electric system. The ATS must be tested, verified, and documented by the Project Developer for proper operation at least every 2 years. The Utility may be present during this testing.

Automatic Reclosing
The Utility employs automatic multiple-shot reclosing on most of the Utility's circuit breakers and circuit reclosers to increase the reliability of service to its customers. Automatic single-phase overhead reclosers are regularly installed on distribution circuits to isolate faulted segments of these circuits.

The Project Developer is advised to consider the effects of Automatic Reclosing (both single phase and three phase) to assure that the Project's internal equipment will not be damaged. In addition to the risk of damage to the Project, an out-of-phase reclosing operation may also present a hazard to Utility equipment since this equipment may not be rated or built to withstand this type of reclosing. The Utility will determine relaying and control equipment that needs to be installed to protect its own equipment from out-of-phase reclosing. Installation of this protection will be undertaken by the Utility at the Project Developer's expense.

Single-Phase Sectionalizing
The Utility also installs single-phase fuses and/or reclosers on its distribution circuits to increase the reliability of service to its customers. Three-phase generator installations may require replacement of fuses and/or single-phase reclosers with three-phase circuit breakers or circuit reclosers at the Project Developer's expense.

TECHNICAL REQUIREMENTS

Specific Requirements by Generator Type

Synchronous Projects
An isolation transformer may be required for three-phase Synchronous Generator Facilities. Except as noted below, the isolation transformer must be incapable of producing ground fault current to the Utility system; any connection except delta primary (Project side), grounded-wye secondary (Utility side) is acceptable. A grounded-wye - grounded-wye transformer connection is acceptable only if the Project's single line-to-ground fault current contribution is less than the Project's three-phase fault current contribution at the PCC. Protection must be provided for internal faults in the isolating transformer; fuses are acceptable.

For a sample One-Line Diagram of this type of facility, see Appendix B.

Induction Projects
For three-phase installations, any isolation transformer connection is acceptable except grounded-wye (Utility side), delta (Project side). Protection must be provided for internal faults in the isolating transformer; fuses are acceptable. The Utility does not require the Project Developer to provide any protection for Utility system ground faults.

For a sample One-Line Diagram of this type of facility, see Appendix B.

Inverter-Type Projects
No isolation transformer is required between the generator and the secondary distribution connection. If an isolation transformer is used for three-phase installations, any isolation transformer connection is acceptable except grounded-wye (Utility side), delta (Project side). Protection must be provided for internal faults in the isolating transformer; fuses are acceptable. The Utility does not require the Project Developer to provide any protection for Utility system ground faults.

For a sample One-Line Diagram of this type of facility, see Appendix C.

Relay Setting Criteria
The relay settings for Projects less than 30 kW must conform to the values specified in IEEE Std. 1547.

Maintenance and Testing
The Utility reserves the right to test the relaying and control equipment that involves protection of the Utility's electric system whenever the Utility determines a reasonable need for such testing exists.

The Project Developer is solely responsible for conducting and documenting proper periodic maintenance on the generating equipment and its associated control, protective equipment, interrupting devices, and main Isolation Device, per manufacturer recommendations.

Routine and maintenance checks of the relaying and control equipment must be conducted in accordance with provided written test procedures which are required by IEEE Std. 1547, and test reports of such testing shall be maintained by the Project Developer and made available for Utility inspection upon request. [NOTE – IEEE 1547 requires that testing be conducted in accordance with written test procedures, and the nationally recognized testing laboratory providing certification will require that such test procedures be available before certification of the equipment.]

Installation Approval
The Project Developer must provide the Utility with 5 business days advance written notice of when the Project will be ready for inspection, testing, and approval.

TECHNICAL REQUIREMENTS

Prior to final approval for Parallel Operation, the Utility reserves the right to inspect the Project and require action to assure conformance to the requirements stated herein.

Miscellaneous Operational Requirements

Miscellaneous requirements include synchronizing equipment for Parallel Operation, reactive requirements, and system stability limitations.

Operating in Parallel
The Project Developer will be solely responsible for the required synchronizing equipment and for properly synchronizing the Project with the Utility's electric system.

Voltage fluctuation at the PCC during synchronization is limited by IEEE Std. 1547.

These requirements are directly concerned with the actual operation of the Project with the Utility:

- The Project may not commence parallel operation until approval has been given by the Utility. The completed installation is subject to inspection by the Utility prior to approval. Preceding this inspection, all contractual agreements must be executed by the Project Developer.

- The Project must be designed to prevent the Project from energizing into a de-energized Utility line. The Project's circuit breaker or contactor must be blocked from closing in on a de-energized circuit.

- The Project shall discontinue parallel operation with a particular service and perform necessary switching when requested by the Utility for any of the following reasons:

    1. When public safety is being jeopardized.

    2. During voltage or loading problems, system emergencies, or when abnormal sectionalizing or circuit configuration occurs on the Utility system.

    3. During scheduled shutdowns of Utility equipment that are necessary to facilitate maintenance or repairs. Such scheduled shutdowns shall be coordinated with the Project.

    4. In the event there is demonstrated electrical interference (i.e. Voltage Flicker, Harmonic Distortion, etc.) to the Utility's customers, suspected to be caused by the Project, and such interference exceeds then current system standards, the Utility reserves the right, at the Utility's initial expense, to install special test equipment as may be required to perform a disturbance analysis and monitor the operation and control of the Project to evaluate the quality of power produced by the Project. In the event that no standards exist, then the applicable tariffs and rules governing electric service shall apply. If the Project is proven to be the source of the interference, and that interference exceeds the Utility's standards or generally accepted industry standards, then it shall be the responsibility of the Project Developer to eliminate the interference problem and to reimburse the Utility for the costs of the disturbance monitoring installation, removal, and analysis excluding the cost of the meters or other special test equipment.

    5. When either the Project or its associated synchronizing and protective equipment is demonstrated by the Utility to be improperly maintained, so as to present a hazard to the Utility system or its customers.

6. Whenever the Project is operating isolated with other Utility customers, for whatever reason.

7. Whenever the Utility notifies the Project Developer in writing of a claimed non-safety related violation of the Interconnection Agreement and the Project Developer fails to remedy the claimed violation within ten working days of notification, unless within that time either the Project Developer files a complaint with the MPSC seeking resolution of the dispute or the Project Developer and Utility agree in writing to a different procedure.

If the Project has shown an unsatisfactory response to requests to separate the generation from the Utility system, the Utility reserves the right to disconnect the Project from parallel operation with the Utility electric system until all operational issues are satisfactorily resolved.

Reactive Power Control
Synchronous generators that will operate in the Flow-back Mode must be dynamically capable of providing 0.90 power factor lagging (delivering reactive power to the Utility) and 0.95 power factor leading (absorbing reactive power from the Utility) at the Point of Receipt. The Point of Receipt is the location where the Utility accepts delivery of the output of the Project. The Point of Receipt can be the physical location of the billing meters or a location where the billing meters are not located, but adjusted for line and transformation losses.

Induction and Inverter-Type Projects that will operate in the Flow-back Mode must provide for their own reactive needs (steady state unity power factor at the Point of Receipt). To obtain unity power factor, the Induction or Inverter-Type Project can:

1. Install a switchable Volt-Ampere reactive (VAR) supply source to maintain unity power factor at the Point of Receipt; or

2. Provide the Utility with funds to install a VAR supply source equivalent to that required for the Project to attain unity power factor at the Point of Receipt at full output.

There are no interconnection reactive power capability requirements for Synchronous, Induction, and Inverter-Type Projects that will operate in the Non-Flow-back Mode. The Utility's existing rate schedules, incorporated herein by reference, contain power factor adjustments based on the power factor of the metered load at these facilities.

Site Limitations
The Project Developer is responsible for evaluating the consequences of unstable generator operation or voltage transients on the Project equipment and determining, designing, and applying any relaying which may be necessary to protect that equipment. This type of protection is typically applied on individual generators to protect the generator facilities.

The Utility will determine if operation of the Project will create objectionable voltage flicker and/or disturbances to other Utility customers and develop any required mitigation measures at the Project Developer's expense.

Revenue Metering Requirements

The Utility will own, operate, and maintain all required billing metering equipment at the Project Developer's expense.

Non-Flow-back Projects
A Utility meter will be installed that only records energy deliveries to the Project.

TECHNICAL REQUIREMENTS

Flow-back Projects
Special billing metering will be required. The Project Developer may be required to provide, at no cost to the Utility, a dedicated dial-up voice-grade circuit (POTS line) to allow remote access to the billing meter by the Utility. This circuit shall be terminated within ten feet of the meter involved.

The Project Developer shall provide the Utility access to the premises at all times to install, turn on, disconnect, inspect, test, read, repair, or remove the metering equipment. The Project Developer may, at its option, have representative witness this work.

The metering installations shall be constructed in accordance with the practices, which normally apply to the construction of metering installations for residential, commercial, or industrial customers. For Projects with multiple generators, metering of each generator may be required. When practical, multiple generators may be metered at a common point provided the metered quantity represents only the gross generator output.

The Utility shall supply to the Project Developer all required metering equipment and the standard detailed specifications and requirements relating to the location, construction, and access of the metering installation and will provide consultation pertaining to the meter installation as required. The Utility will endeavor to coordinate the delivery of these materials with the Project Developer's installation schedule during normal scheduled business hours.

The Project Developer may be required to provide a mounting surface for the metering equipment. The mounting surface and location must meet the Utility's specifications and requirements.

The responsibility for installation of the equipment is shared between the Utility and the Project Developer. The Project Developer may be required to install some of the metering equipment on its side of the PCC, including instrument transformers, cabinets, conduits, and mounting surfaces. The Utility shall install the meters and communication links. The Utility will endeavor to coordinate the installation of these items with the Project Developer's schedule during normal scheduled business hours.

Communication Circuits

The Project Developer is responsible for ordering and acquiring the telephone circuits required for the Project interconnection. The Project Developer will assume all installation, operating, and maintenance costs associated with the telephone circuits, including the monthly charges for the telephone lines and any rental equipment required by the local telephone provider. However, at the Utility's discretion, the Utility may select an alternative communication method, such as wireless communications. Regardless of the method, the Project Developer will be responsible for all costs associated with the material and installation, whereas the Utility will be responsible to define the specific communication requirements.

The Utility will cooperate and provide Utility information necessary for proper installation of the telephone circuits upon written request.

All telephone circuit (both voice and data) must be analog circuits.

APPENDIX A

INTERCONNECTION APPLICATION

GENERATOR INTERCONNECTION APPLICATION

AGGREGATE GENERATOR OUTPUT BELOW 30 kW

1. The undersigned Project Developer submits this Generator Interconnection Application and appropriate filing fee to interconnect a new Project to the Utility Electric System or to increase the capacity of an existing Project interconnected to the Utility Electric System.

2. A Project Developer requesting interconnection or an increase in the capacity of an existing Project to the Utility Electric System must provide the following information:

   a. Completed Interconnection Application Data sheet appropriate for the capacity rating and type of generating unit(s), as found in Utility's Generator Interconnection Requirements (Interconnection Application Data sheet, found in Appendix B or C, must be attached to this Interconnection Application).

   b. Description of the equipment configuration and proposed interconnection one-line diagram (one-line diagram must be attached to this Interconnection Application).

   c. Project Developer (Single Point of Contact):

      Name: _____

      Address: _____

      _____

      Phone Number: _____

      Fax Number: _____

      e-mail Address: _____

      Project Site Address: _____

3. This Generator Interconnection Application shall be directed to the Utility representative as indicated below:

   Title
   Company
   Address 1
   Address 2

4. I, the undersigned and authorized representative of the Project, submit this Generator Interconnection Application and required technical data for the Utility. I understand that upon acceptance, the Utility shall subsequently provide an Interconnection Study Agreement, if said Interconnection Study is determined to be necessary. The Interconnection Study Agreement will include the Scope of the Interconnection Study. I also understand that I shall be required to furnish certain required technical data as requested by the Utility in support of this study and reimburse the Utility for its study expenses.

   Authorized Signature: _____

   Printed Name: _____

   Title: _____

   Company Name: _____

   Date: _____

APPENDIX B

SYNCHRONOUS AND INDUCTION GENERATORS AGGREGATE GENERATION LESS THAN 30 kW

REQUIRED DATA

ONE-LINE REPRESENTATION
TYPICAL ISOLATION AND FAULT PROTECTION FOR SYNCHRONOUS GENERATOR INSTALLATIONS
LESS THAN 30 kW

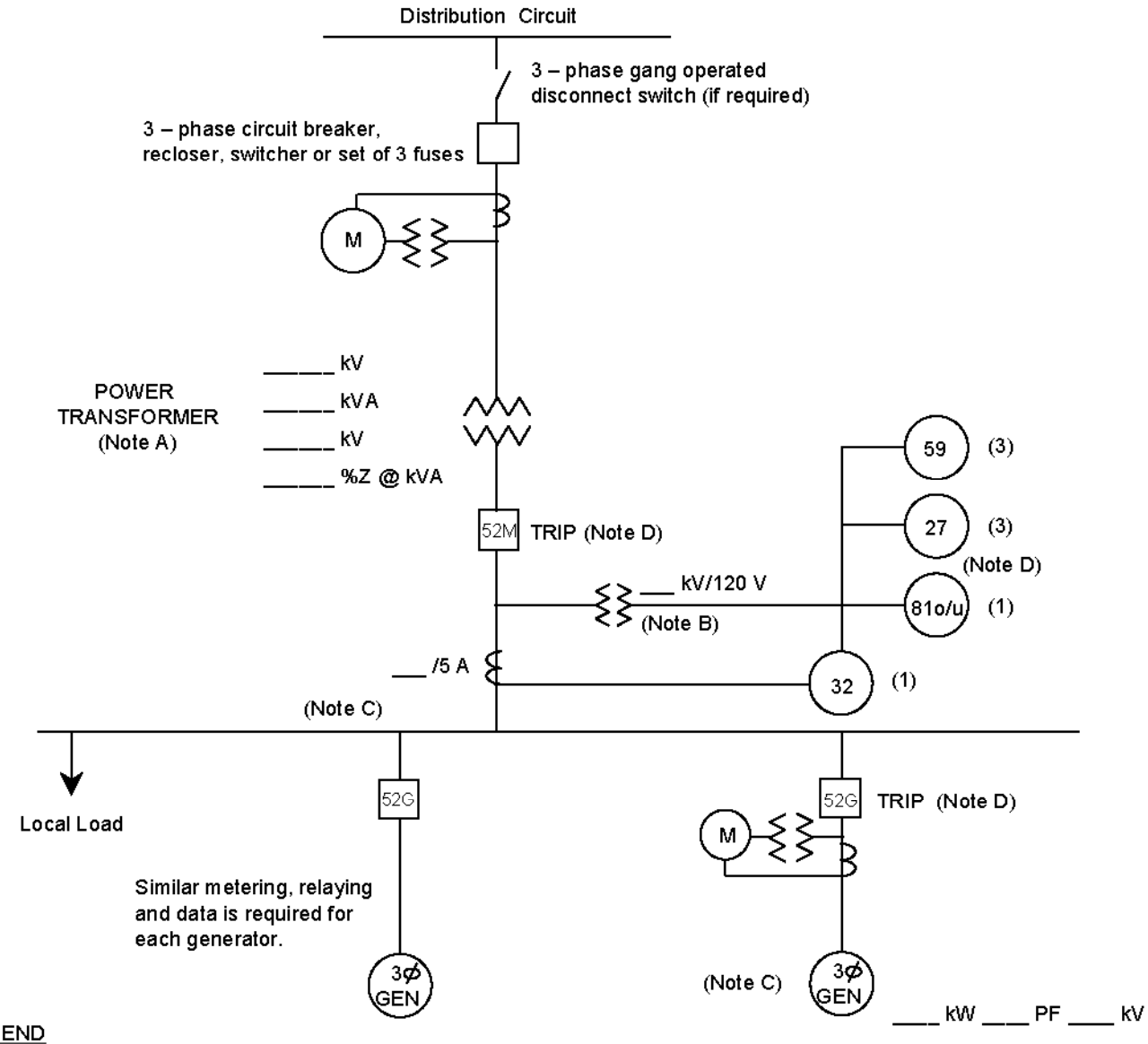

____ kW ____ PF ____ kV

X_d'' = ____ % @ ____ kVA

X_d' = ____ % @ ____ kVA

X_d = ____ % @ ____ kVA

LEGEND

27	Undervoltage
32	Reverse Power (not required for sellback)
59	Overvoltage
81o/u	Over/Underfrequency

NOTES

A) See technical requirements for permissible connection configurations and protection. Transformer connections proposed shall be shown on the one-line diagram by the Project Developer. Transformer connection and secondary grounding to be approved by Utility.

B) VTs for 59, 27, 81o/u and 32 are shown connected on the primary (Project side) of the power transformer, but may instead be connected on the secondary (Utility side). IEEE std 1547 requirements for voltage and frequency must be met at the PCC. IEEE Std. 1547 permits the VTs to be connected at the point of generator connection in certain cases.

C) Main breaker protection, generator protection and synchronizing equipment are not shown.

D) Trip of all 52G breakers or the 52M breaker is acceptable, depending upon whether the Project Developer wants to serve its own isolated load after loss of Utility service.

ONE-LINE REPRESENTATION
TYPICAL ISOLATION AND FAULT PROTECTION FOR INDUCTION GENERATOR INSTALLATIONS
LESS THAN 30 kW

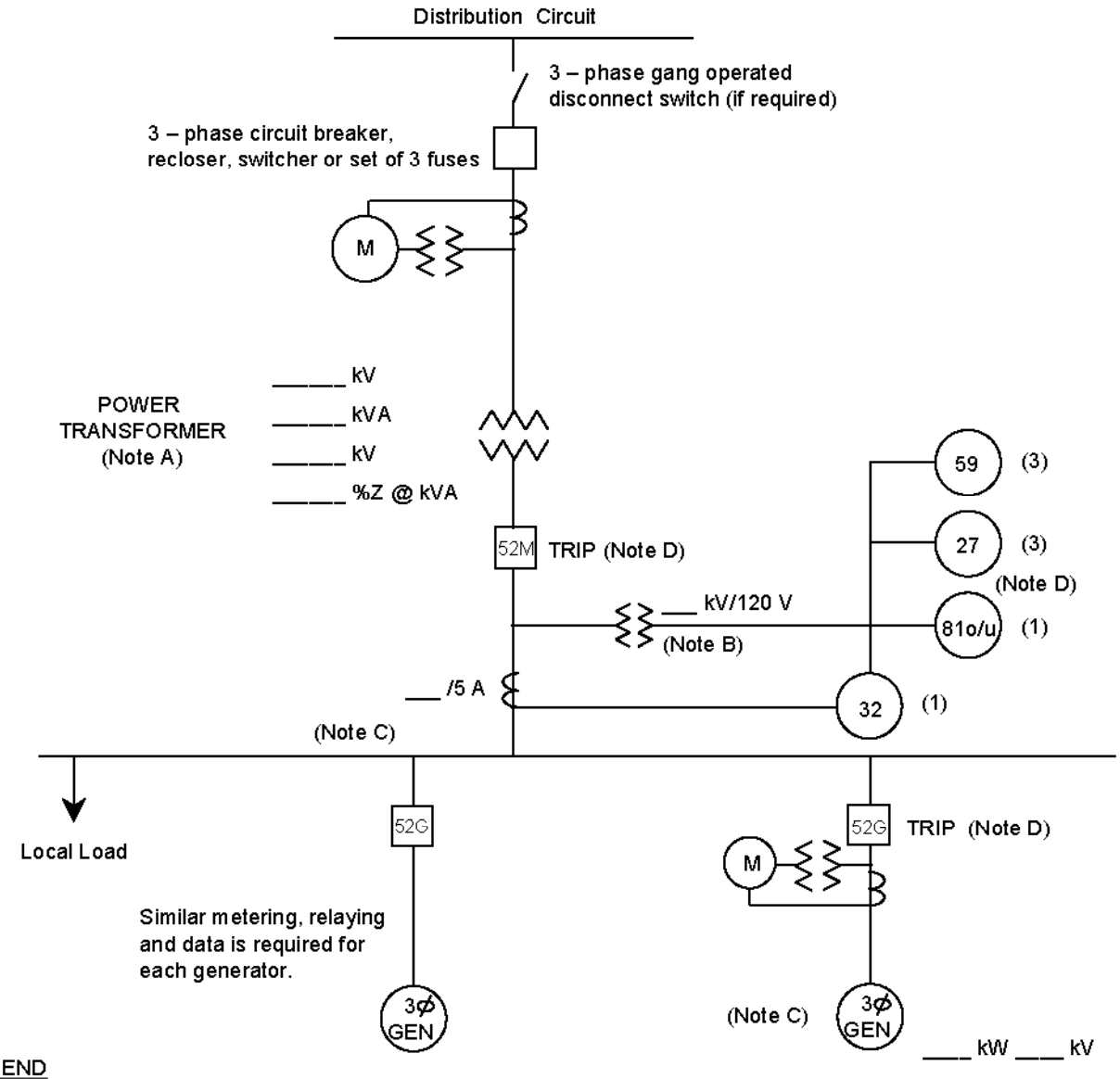

LEGEND

27	Undervoltage
32	Reverse Power (not required for sellback)
59	Overvoltage
81o/u	Over/Underfrequency

NOTES

A) See technical requirements for permissible connection configurations and protection. Transformer connections proposed shall be shown on the one-line diagram by the Project Developer. Transformer connection and secondary grounding to be approved by Utility.

B) VTs for 59, 27, 81o/u and 32 are shown connected on the primary (Project side) of the power transformer, but may instead be connected on the secondary (Utility side). IEEE std 1547 requirements for voltage and frequency must be met at the PCC. IEEE Std. 1547 permits the VTs to be connected at the point of generator connection in certain cases.

C) Main breaker protection, generator protection and synchronizing equipment are not shown.

D) Trip of all 52G breakers or the 52M breaker is acceptable, depending upon whether the Project Developer wants to serve its own isolated load after loss of Utility service.

SYNCHRONOUS OR INDUCTION GENERATORS – AGGREGATE < 30 kW
INTERCONNECTION APPLICATION DATA FOR: _____
PROVIDED BY: _____ DATE: _____

Instructions: Attach data sheets as required. Indicate in the table below the page number of the attached data on which the requested information is provided.

General Information

Item No	Data Description	Attached Page No
1	Flow-back or Non-Flow-back	
2	Project Type (Base load, peaking, intermediate)	
3	Site Plan	
4	Simple One-Line Diagram(s) for Project and Project Load	
5	Detailed One-Line Diagram(s) for Project	
6	Energization Date for Project Interconnection Facilities	
7	First Parallel Operation Date for Testing	
8	Project Commercial Operation Date	
9	Estimated Project Cost	

The following information on these system components shall appear on the preliminary One-Line Diagram, including manufacturer make and model for the items listed below:

- Breakers - Rating, location and normal operating status (open or closed)
- Buses - Operating voltage
- Capacitors - Size of bank in kVAR
- Current Transformers - Overall ratio, connected ratio
- Fuses - normal operating status, rating (Amps), type
- Generators - Capacity rating (kVA), location, type, method of grounding
- Grounding Resistors - Size (ohms), current (Amps)
- Isolating transformers - Capacity rating (kVA), location, impedance, voltage ratings, primary and secondary connections and method of grounding
- Potential Transformers - Ratio, connection
- Reactors - Ohms/phase
- Relays - Types, quantity, IEEE device number, operator lines indicating the device initiated by the relays.
- Switches - Location and normal operating status (open or closed), type, rating
- Tagging Point - Location, identification

SYNCHRONOUS OR INDUCTION GENERATORS – AGGREGATE < 30 kW
INTERCONNECTION APPLICATION DATA FOR: _____
PROVIDED BY: _____ DATE: _____

Instructions: Attach data sheets as required. Indicate in the table below the page number of the attached data (manufacturer's data where appropriate) on which the requested information is provided. Provide one table for each unique generator.

Electric Generator(s) at the Project: Generator No _____

Item No	Data Value	Data Description	Attached Page No
1		Generator Type (synchronous or induction)	
2		Generator Nameplate Voltage	
3		Generator Nameplate Watts or Volt-Amperes	
4		Generator Nameplate Power Factor (pf)	
5		Short Circuit Current contribution from generator at the Point of Common Coupling (single-phase and three-phase)	
6		National Recognized Testing Laboratory Certification	
7		Written Commissioning Test Procedure	

APPENDIX C

INVERTER-TYPE GENERATORS
AGGREGATE GENERATION LESS THAN 30 kW

REQUIRED DATA

ONE-LINE REPRESENTATION
TYPICAL ISOLATION AND FAULT PROTECTION FOR INVERTER GENERATOR INSTALLATIONS
LESS THAN 30 kW

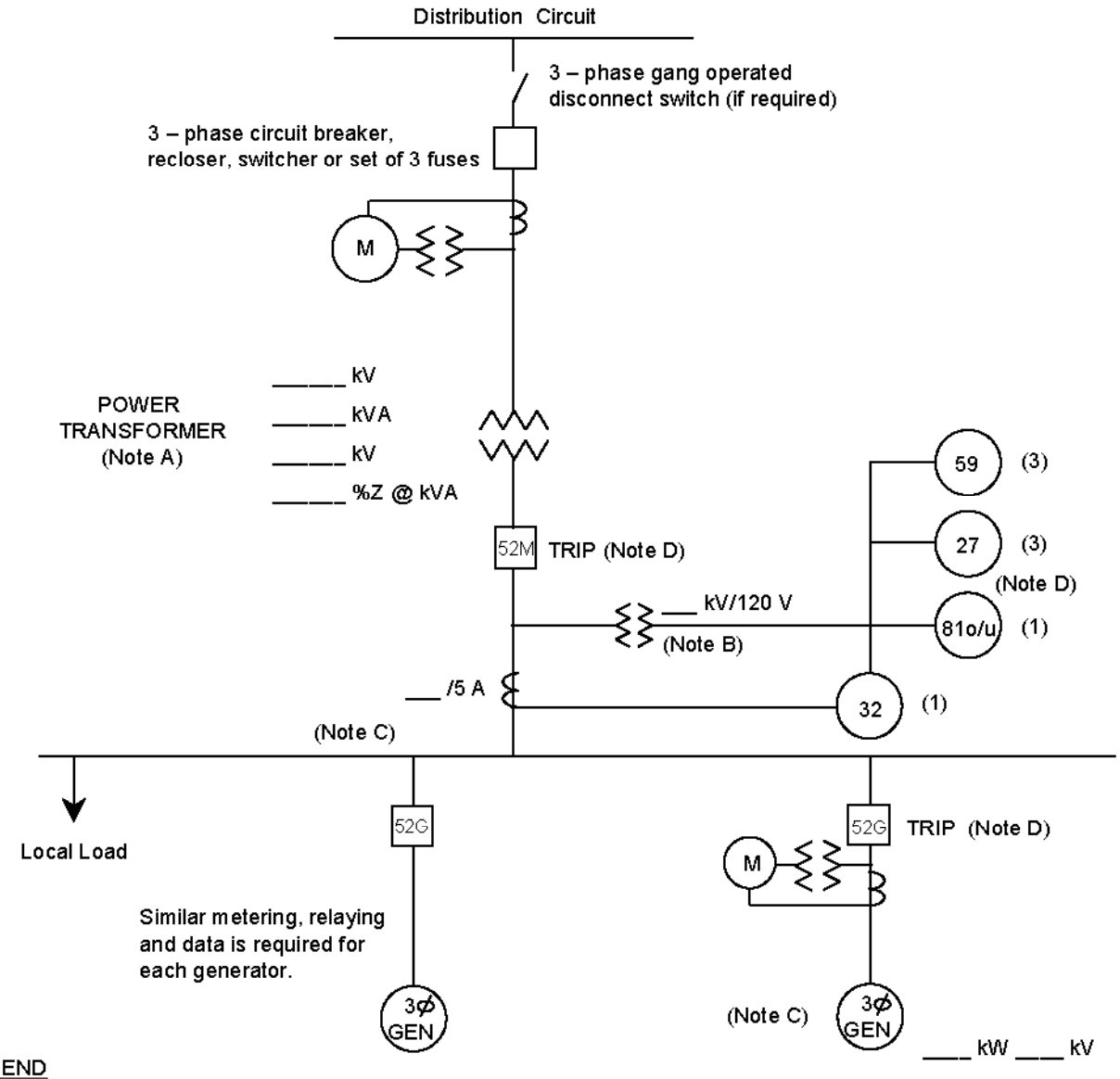

LEGEND

27	Undervoltage
32	Reverse Power (not required for sellback)
59	Overvoltage
81o/u	Over/Underfrequency

NOTES

A) See technical requirements for permissible connection configurations and protection. Transformer connections proposed shall be shown on the one-line diagram by the Project Developer. Transformer connection and secondary grounding to be approved by Utility.

B) VTs for 59, 27, 81o/u and 32 are shown connected on the primary (Project side) of the power transformer, but may instead be connected on the secondary (Utility side). IEEE std 1547 requirements for voltage and frequency must be met at the PCC. IEEE Std. 1547 permits the VTs to be connected at the point of generator connection in certain cases.

C) Main breaker protection, generator protection and synchronizing equipment are not shown.

D) Trip of all 52G breakers or the 52M breaker is acceptable, depending upon whether the Project Developer wants to serve its own isolated load after loss of Utility service.

INVERTER-TYPE GENERATORS – AGGREGATE < 30 kW
INTERCONNECTION APPLICATION DATA FOR: _____
PROVIDED BY: _____ DATE: _____

Instructions: Attach data sheets as required. Indicate in the table below the page number of the attached data on which the requested information is provided.

General Information

Item No	Data Description	Attached Page No
1	Flow-back or Non-Flow-back	
2	Project Type (Base load, peaking, intermediate, other)	
3	Site Plan	
4	Simple One-Line Diagram(s) for Project and Project Load	
5	Detailed One-Line Diagram(s) for Project	
6	Energization Date for Project Interconnection Facilities	
7	First Parallel Operation Date for Testing	
8	Project Commercial Operation Date	
9	Estimated Project Cost	

The following information on these system components shall appear on the preliminary One-Line Diagram, including manufacturer make and model for the items listed below:

- Breakers - Rating, location and normal operating status (open or closed)
- Buses - Operating voltage
- Capacitors - Size of bank in kVAR
- Current Transformers - Overall ratio, connected ratio
- Fuses - normal operating status, rating (Amps), type
- Generators - Capacity rating (kVA), location, type, method of grounding
- Grounding Resistors - Size (ohms), current (Amps)
- Isolating transformers - Capacity rating (kVA), location, impedance, voltage ratings, primary and secondary connections and method of grounding
- Potential Transformers - Ratio, connection
- Reactors - Ohms/phase
- Relays - Types, quantity, IEEE device number, operator lines indicating the device initiated by the relays.
- Switches - Location and normal operating status (open or closed), type, rating
- Tagging Point - Location, identification

INVERTER-TYPE GENERATORS – AGGREGATE < 30 kW
INTERCONNECTION APPLICATION DATA FOR: _____
PROVIDED BY: _____ DATE: _____

Instructions: Attach data sheets as required. Indicate in the table below the page number of the attached data (manufacturer's data where appropriate) on which the requested information is provided. Provide one table for each unique generator.

Electric Generator(s) at the Project: **Generator No _____**

Item No	Data Description	Attached Page No
1	Generator Type (Inverter)	
2	Generator Nameplate Voltage	
3	Generator Nameplate Watts or Volt-Amperes	
4	Generator Nameplate Power Factor (pf)	
5	Short Circuit Current contribution from generator at the Point of Common Coupling (single-phase and three-phase)	
6	National Recognized Testing Laboratory Certification	
7	Written Commissioning Test Procedure	

APPENDIX D

INTERCONNECTION STUDY AGREEMENT

[Utility]
[Project]
Interconnection Study Agreement for
Generator Interconnection
with Aggregate Project Output Below 30 kW

WHEREAS, proposals to construct or upgrade a Project which will be operated in parallel with and interconnected with [Utility's] ("Utility") electric system must be reviewed by the Utility to determine how it will impact the Utility electric system.

WHEREAS, on _____, Utility received from _____ ("Project Developer") a Generator Interconnection Application.

WHEREAS Utility has determined that an Interconnection Study is necessary to determine whether the Utility electric system can accommodate the requested interconnection.

NOW, THEREFORE, in consideration of the mutual covenants and agreements herein set forth, the Utility and the Project Developer agree as follows:

1. The Utility shall complete an Interconnection Study in accordance with the Utility Generator Interconnection Requirements and this Agreement.

2. The Utility is permitted by the Michigan Public Service Commission to charge the Project Developer for an Interconnection Study. The charges shall not exceed the lesser of either of the following:

   (a) 5% of the estimated total cost of the Project or,
   (b) $10,000

The Utility shall not charge the Project Developer if the Project's aggregate export capacity is less than 15% of the line section peak load and the Project does not contribute more than 25% of the maximum short circuit current at the point of interconnection. The Project Developer will be billed for the cost of the Interconnection Study at the conclusion of the Interconnection Study.

3. The Project Developer is to return this executed Interconnection Study Agreement to the Utility as soon as possible. The interconnection process will not proceed until the fully executed Interconnection Study Agreement is received.

4. The Utility shall supply a copy of the completed Interconnection Study to the Project Developer.

5. Any notice or request made to or by either Party regarding this Agreement shall be made to the representative of the other Party, or its designated agent, as indicated below.

Utility	Project Developer
Name _____	_____
Company _____	_____
Address 1 _____	_____
Address 2 _____	_____

IN WITNESS WHEREOF, the Parties have caused this Interconnection Study Agreement to be executed by their respective authorized officials.

By:	By:
(Signature)	(Signature)
(Typewritten or Printed Name)	(Typewritten or Printed Name)
Title	Title
Date	Date

APPENDIX E

INTERCONNECTION AND OPERATING AGREEMENT

Each Utility will use its own form for the Interconnection and Operating Agreement.

APPENDIX F

CONTACT LIST

Each Utility will maintain a contact list, as required by the MPSC rules, to be provided to Project Developers.