STATE OF MICHIGAN
CENTRAL PROCUREMENT SERVICES

Department of Technology, Management, and Budget
320 S. WALNUT ST., LANSING, MICHIGAN 48933
P.O. BOX 30026 LANSING, MICHIGAN 48909

CONTRACT CHANGE NOTICE

Change Notice Number **3**

to

Contract Number **071B7700087**

CONTRACTOR	
	KNAPHEIDE TRUCK EQUIPMENT
	1200 South Averill
	Flint, MI 48503
	Nathaniel Tomalia
	810-908-9105
	jfountain@knapheide.com
	CV0043058

STATE			
	Program Manager	Various	SW
	Contract Administrator	Yvon Dufour	DTMB
		(517) 249-0455	
		dufoury@michigan.gov	

CONTRACT SUMMARY			
EQUIPMENT UP-FITTING PURCHASE			
INITIAL EFFECTIVE DATE	**INITIAL EXPIRATION DATE**	**INITIAL AVAILABLE OPTIONS**	**EXPIRATION DATE BEFORE**
January 13, 2017	January 12, 2021	2 - 1 Year	January 12, 2023
PAYMENT TERMS		**DELIVERY TIMEFRAME**	
45 Days			
ALTERNATE PAYMENT OPTIONS			**EXTENDED PURCHASING**
☐ P-Card ☐ PRC ☐ Other			☒ Yes ☐ No
MINIMUM DELIVERY REQUIREMENTS			

DESCRIPTION OF CHANGE NOTICE				
OPTION	**LENGTH OF OPTION**	**EXTENSION**	**LENGTH OF EXTENSION**	**REVISED EXP. DATE**
☐		☒	One year	January 12, 2024
CURRENT VALUE	**VALUE OF CHANGE NOTICE**	**ESTIMATED AGGREGATE CONTRACT VALUE**		
$2,000,000.00	$0.00	$2,000,000.00		

DESCRIPTION

Effective 10/11/2022, this contract is extended 12 months. The revised contract expiration date is 1/12/2024. All other terms, conditions, specifications, and pricing remain the same. Per DTMB request, DTMB Procurement approval, and State Administrative Board approval on 10/11/2022.

STATE OF MICHIGAN
CENTRAL PROCUREMENT SERVICES
Department of Technology, Management, and Budget

525 W. ALLEGAN ST., LANSING, MICHIGAN 48913
P.O. BOX 30026 LANSING, MICHIGAN 48909

CONTRACT CHANGE NOTICE

Change Notice Number **2**

to

Contract Number **071B7700087**

CONTRACTOR	
	KNAPHEIDE TRUCK EQUIPMENT
	1200 South Averill
	Flint, MI 48503
	Nathaniel Tomalia
	810-908-9105
	ntomalia@knapheide.com
	CV0043058

STATE			
Program Manager	Scott Poyer	SW	
	517-284-6448		
	poyers@Michigan.gov		
Contract Administrator	Yvon Dufour	DTMB	
	(517) 249-0455		
	dufoury@michigan.gov		

CONTRACT SUMMARY

EQUIPMENT UP-FITTING PURCHASE

INITIAL EFFECTIVE DATE	INITIAL EXPIRATION DATE	INITIAL AVAILABLE OPTIONS	EXPIRATION DATE BEFORE
January 13, 2017	January 12, 2021	2 - 1 Year	January 12, 2021

PAYMENT TERMS	DELIVERY TIMEFRAME
45 Days	

ALTERNATE PAYMENT OPTIONS			EXTENDED PURCHASING	
☐ P-Card	☐ PRC	☐ Other	☒ Yes	☐ No

MINIMUM DELIVERY REQUIREMENTS

DESCRIPTION OF CHANGE NOTICE

OPTION	LENGTH OF OPTION	EXTENSION	LENGTH OF EXTENSION	REVISED EXP. DATE
☒	2 years	☐		January 12, 2023

CURRENT VALUE	VALUE OF CHANGE NOTICE	ESTIMATED AGGREGATE CONTRACT VALUE
$2,000,000.00	$0.00	$2,000,000.00

DESCRIPTION

Effective 11/16/2020, the first and second option years available on this contract are hereby exercised. The revised contract expiration date is 1/12/2023. All other terms, conditions, specifications and pricing remain the same. Per agency request, and DTMB Procurement approval.

STATE OF MICHIGAN
ENTERPRISE PROCUREMENT

Department of Technology, Management, and Budget
525 W. ALLEGAN ST., LANSING, MICHIGAN 48913
P.O. BOX 30026 LANSING, MICHIGAN 48909

CONTRACT CHANGE NOTICE

Change Notice Number **1**

to

Contract Number **071B7700087**

CONTRACTOR	
	Knapheide Truck Equipment Co.
	1200 South Averill
	Flint, MI 48503
	Jim Fountain
	810-620-0755
	jfountain@knapheide.com
	*******0132

STATE			
	Program Manager	Scott Poyer	SW
		517-284-6448	
		poyers@Michigan.gov	
	Contract Administrator	Yvon Dufour	DTMB
		(517) 284-6996	
		dufoury@michigan.gov	

CONTRACT SUMMARY

EQUIPMENT UP-FITTING PURCHASE

INITIAL EFFECTIVE DATE	INITIAL EXPIRATION DATE	INITIAL AVAILABLE OPTIONS	EXPIRATION DATE BEFORE CHANGE(S) NOTED BELOW
January 13, 2017	January 12, 2021	2 - 1 Year	January 12, 2021

PAYMENT TERMS	DELIVERY TIMEFRAME
45 Days	120 Days

ALTERNATE PAYMENT OPTIONS			EXTENDED PURCHASING	
☐ P-Card	☐ Direct Voucher (DV)	☐ Other	☒ Yes	☐ No

MINIMUM DELIVERY REQUIREMENTS

N/A

DESCRIPTION OF CHANGE NOTICE

OPTION	LENGTH OF OPTION	EXTENSION	LENGTH OF EXTENSION	REVISED EXP. DATE
☐		☐		January 12, 2021

CURRENT VALUE	VALUE OF CHANGE NOTICE	ESTIMATED AGGREGATE CONTRACT VALUE
$2,000,000.00	$0.00	$2,000,000.00

DESCRIPTION

Effective 3/1/2017, the following amendment(s) is (are) incorporated into this Contract per attachment (Schedule C1- Pricing. Line 58 changed to include custiom items.) All other terms, conditions, specifications and pricing remain the same. Per contractor and agency agreement, and DTMB Procurement approval.

CONTRACT # 071B7700087 - AWARDED SPECIFICATIONS FOR PURCHASE						
Spec #	EQUIPMENT MAKE & MODEL:	EQUIPMENT CATEGORY	Quoted Price	Hourly rate for training (per Schedule A, Statement of	Hourly rate for quoted custom work	DELIVERY Per mile from Contractor's nearest dealer location
2	C03-2001LG-16 Lift Gate - Thieman TT15EST 5626+6	lift gate	$ 3,490.00	$ 55.55	$ 85.00	$ 0.88
3	C03-2001SP-16 Snow Plow - Western MVPPIUTP95	snow plow	$ 6,225.00	$ 55.55	$ 85.00	$ 0.88
6	C03-20CU11-16 utility body - Knapeide KC132H2094J	utility body	$ 16,965.00	$ 55.55	$ 85.00	$ 0.88
21	C60-2001-16 Combination Spreader with High Speed Anti Icing - Henderson First Response		$ 75,500.00	$ 55.55	$ 85.00	$ 2.55
NON - AWARDED SPECIFICATIONS FOR PURCHASE						
1	CD03-2001CD-16 dump body - Galion 130USDDS	dump body	$ 12,477.00	$ 55.55	$ 85.00	$ 0.88
5	C03-2011cd-16 TB FT dump body - Knapeide KC132H2094J	dump body	$ 16,581.00	$ 55.55	$ 85.00	$ 0.88
7	C03-3001CAP-16 cap - A.R.E. Series V	Cap pickup	$ 1,888.00	$ 55.55	$ 85.00	$ 0.88

Catalog Pricing For PURCHASE (add lines below as needed)						
Item #	EQUIPMENT MAKE & MODEL:	EQUIPMENT CATEGORY	% Discount Off MSRP (Delivery is Included)	Installation		
1	Henderson Knapheide catalog of products MSRP pricing - www.hendersonproducts.com - (See Schedule C2 - Pricing Attachments)	Full line of Snow and Ice control equipment	see work book	Included in pricing. Call Jim Fountain 810-620-0755 for workbook assistance.		
2	Knapheide Products see www.knapheide.com call Jim Fountain 810-620-0755 for pricing	Utility bodies, dump bodies, platform bodies, truck caps, crane bodies, cut away van bodies, mechanics truks, etc.	municipal pricing 5% below retail	call Jim Fountain 810-620-0755 for pricing		
3	Truck-Lite MSRP pricing - www.truck-lite.com - (See Schedule C2 - Pricing Attachments)	Lighting	10%	call Jim Fountain 810-620-0755 for pricing		
4	RC Industries MSRP pricing - www.rcindustries.com - (See Schedule C2 - Pricing Attachments)	tool boxes	10%	call Jim Fountain 810-620-0755 for pricing		
5	Back Rack MSRP pricing - www.backrack.com - (See Schedule C2 - Pricing Attachments)	cab protectors	10%	call Jim Fountain 810-620-0755 for pricing		
6	Western Products MSRP pricing - www.western.com - (See Schedule C2 - Pricing Attachments)	snow plows and spreaders	10%	call Jim Fountain 810-620-0755 for pricing		
7	SnowEx MSRP pricing - www.SnowEx.com - (See Schedule C2 - Pricing Attachments)	snow plows and spreaders	10%	call Jim Fountain 810-620-0755 for pricing		
8	Weather Guard MSRP pricing - www.weatherguard.com - (See Schedule C2 - Pricing Attachments)	tool boxes	10%	call Jim Fountain 810-620-0755 for pricing		
9	Weather Guard MSRP pricing - www.weatherguard.com - (See Schedule C2 - Pricing Attachments)	Van interior packages	10%	call Jim Fountain 810-620-0755 for pricing		
10	Tommy Gate Parts MSRP parts pricing - www.tommygate.com - (See Schedule C2 - Pricing Attachments)	Lift Gate parts	8%	call Jim Fountain 810-620-0755 for pricing		
11	Luverne Truck Equipment MSRP pricing - www.luvernetruck.com - (See Schedule C2 - Pricing Attachments)	Truck equipment items	10%	call Jim Fountain 810-620-0755 for pricing		
12	Whelen MSRP pricing - www.whelen.com - (See Schedule C2 - Pricing Attachments)	Lighting	10%	call Jim Fountain 810-620-0755 for pricing		
13	Auto Crane MSRP pricing - www.autocrane.com - (See Schedule C2 - Pricing Attachments)	truck cranes	8%	call Jim Fountain 810-620-0755 for pricing		
14	Stellar Industries TC series MSRP pricing - www.stellarindustries.com - (See Schedule C2 - Pricing Attachments)	telescopic cranes	8%	call Jim Fountain 810-620-0755 for pricing		
15	Stellar Light Duty MSRP pricing - www.stellarindustries.com - (See Schedule C2 - Pricing Attachments)	Light duty cranes	8%	call Jim Fountain 810-620-0755 for pricing		
16	Stellar Heavy Duty MSRP pricing - www.stellarindustries.com - (See Schedule C2 - Pricing Attachments)	Heavy duty cranes	8%	call Jim Fountain 810-620-0755 for pricing		
17	Stellar Hooklifts MSRP pricing - www.stellarindustries.com - (See Schedule C2 - Pricing Attachments)	Hooklift systems	8%	call Jim Fountain 810-620-0755 for pricing		

18	Stellar EC series cranes MSRP pricing - www.stellarindustries.com - (See Schedule C2 - Pricing Attachments)	EC series cranes	8%	call Jim Fountain 810-620-0755 for pricing
19	Maxxima LED lighting MSRP pricing - www.maxxima.com - (See Schedule C2 - Pricing Attachments)	LED Lighting	10%	call Jim Fountain 810-620-0755 for pricing
20	Star Lighting MSRP pricing - www.starlightingproducts.com - (See Schedule C2 - Pricing Attachments)	Lighting	10%	call Jim Fountain 810-620-0755 for pricing
21	Venco Crane MSRP pricing - www.venturo.com - (See Schedule C2 - Pricing Attachments)	Cranes	8%	call Jim Fountain 810-620-0755 for pricing
22	Venco Hoist MSRP pricing - www.venturo.com - (See Schedule C2 - Pricing Attachments)	Hoists	8%	call Jim Fountain 810-620-0755 for pricing
23	Tommy Gate MSRP Liftgate pricing - www.tommygate.com - (See Schedule C2 - Pricing Attachments)	Lift Gates	8%	call Jim Fountain 810-620-0755 for pricing
24	Henderson Bench Press Hoists MSRP pricing - www.hendersonproducts.com - (See Schedule C2 - Pricing Attachments)	Hoists	3%	call Jim Fountain 810-620-0755 for pricing
25	Henderson Magnum dump body MSRP pricing - www.hendersonproducts.com - (See Schedule C2 - Pricing Attachments)	Heavy duty dump body	3%	call Jim Fountain 810-620-0755 for pricing
26	Henderson MKE 14ft. Dump body MSRP pricing - www.hendersonporducts.com - (See Schedule C2 - Pricing Attachments)	Tandem dump body	3%	call Jim Fountain 810-620-0755 for pricing
27	Henderson MKE 10ft. Dump body MSRP pricing - www.hendersonproducts.com - (See Schedule C2 - Pricing Attachments)	Single axle dump body	3%	call Jim Fountain 810-620-0755 for pricing
28	Henderson MKIII 3 yard dump body MSRP pricing - www.hendersonproducts.com - (See Schedule C2 - Pricing Attachments)	3 yard dump body	3%	call Jim Fountain 810-620-0755 for pricing
29	Henderson MKIII 5 yard dump body MSRP pricing - www.hendersonproducts.com - (See Schedule C2 - Pricing Attachments)	5 yard dump body	3%	call Jim Fountain 810-620-0755 for pricing
30	Henderson 11ft. Muni Body singel axle MSRP pricing - www.hendersonproducts.com - (See Schedule C2 - Pricing Attachments)	Muni Body single axle	3%	call Jim Fountain 810-620-0755 for pricing
31	Henderson 14ft. Muni Body tandem axle MSRP pricing - www.hendersonproducts.com - (See Schedule C2 - Pricing Attachments)	Muni Body tandem axle	3%	call Jim Fountain 810-620-0755 for pricing
32	Henderson PWS 800 gallon MSRP pricing - www.hendersonproducts.com - (See Schedule C2 - Pricing Attachments)	Pre Wet system	3%	call Jim Fountain 810-620-0755 for pricing
33	Henderson PWS 400 gallon MSRP pricing - www.hendersonproducts.com - (See Schedule C2 - Pricing Attachments)	Pre Wet system	3%	call Jim Fountain 810-620-0755 for pricing
34	Henderson FSH II 13ft. Vbox Spreader MSRP pricing - www.hendersonproducts.com - (See Schedule C2 - Pricing Attachments)	Vbox Spreader	3%	call Jim Fountain 810-620-0755 for pricing
35	Henderson FSH II 10ft. Vbox Spreader MSRP pricing - www.hendersonproducts.com - (See Schedule C2 - Pricing Attachments)	Vbox Spreader	3%	call Jim Fountain 810-620-0755 for pricing
36	Henderson TGS tailgate spreader MSRP pricing - www.hendersonproducts.com - (See Schedule C2 - Pricing Attachments)	Tailgate spreader	3%	call Jim Fountain 810-620-0755 for pricing
37	Henderson RTS replacement tailgate spreader MSRp pricing - www.hendersonproducts.com - (See Schedule C2 - Pricing Attachments)	Replacement Tailgate spreader	3%	call Jim Fountain 810-620-0755 for pricing
38	Henderson LAS 1800 gallon MSRP pricing - www.hendersonproducts.com - (See Schedule C2 - Pricing Attachments)	Liquid Application System	3%	call Jim Fountain 810-620-0755 for pricing
39	Henderson LAS 1650 gallon MSRP pricing - www.hendersonproducts.com - (See Schedule C2 - Pricing Attachments)	Liquid Application System	3%	call Jim Fountain 810-620-0755 for pricing
40	Henderson LAS 1235 gallon MSRP pricing - www.hendersonproducts.com - (See Schedule C2 - Pricing Attachments)	Liquid Application System	3%	call Jim Fountain 810-620-0755 for pricing
41	Henderson LAS 925 gallon MSRP pricing - www.hendersonproducts.com - (See Schedule C2 - Pricing Attachments)	Liquid Application System	3%	call Jim Fountain 810-620-0755 for pricing
42	Henderson One Way Plow 12L MSRP pricing - www.hendersonproducts.com - (See Schedule C2 - Pricing Attachments)	One Way Plow	3%	call Jim Fountain 810-620-0755 for pricing
43	Henderson One Way Plow 12S MSRP pricing - www.hendersonproducts.com - (See Schedule C2 - Pricing Attachments)	One Way Plow	3%	call Jim Fountain 810-620-0755 for pricing

44	Henderson RSP 10ft. reversible plow MSRP pricing - www.hendersonproducts.com - (See Schedule C2 - Pricing Attachments)	Reversible Plow	3%	call Jim Fountain 810-620-0755 for pricing
45	Henderson RSP 11ft. Reversible plow MSRP pricing - www.hendersonproducts.com - (See Schedule C2 - Pricing Attachments)	Reversible Plow	3%	call Jim Fountain 810-620-0755 for pricing
46	Henderson Wing MSRP pricing - www.hendersonproducts.com - (See Schedule C2 - Pricing Attachments)	Wing	3%	call Jim Fountain 810-620-0755 for pricing
47	Henderson UBS 10ft. Underbody scraper MSRP pricing - www.hendersonproducts.com - (See Schedule C2 - Pricing Attachments)	Unerbody Scraper	3%	call Jim Fountain 810-620-0755 for pricing
48	Henderson UBS 12ft. Underbody scraper MSRP pricing - www.hendersonproducts.com - (See Schedule C2 - Pricing Attachments)	Unerbody Scraper	3%	call Jim Fountain 810-620-0755 for pricing
49	Henderson Black Maxx 14ft. Tandem MSRP pricing - www.hendersonproducts.com - (See Schedule C2 - Pricing Attachments)	Black Maxx 14ft. Tandem body	3%	call Jim Fountain 810-620-0755 for pricing
50	Henderson Black Maxx 13ft. Tandem MSRP pricing - www.hendersonproducts.com - (See Schedule C2 - Pricing Attachments)	Black Maxx 13ft. Tandem body	3%	call Jim Fountain 810-620-0755 for pricing
51	Henderson Brine Extreme Pro MSRP pricing - www.hendersonproducts.com - (See Schedule C2 - Pricing Attachments)	Brine Maker	3%	call Jim Fountain 810-620-0755 for pricing
52	Henderson Brine Extreme trailer MSRP pricing - www.hendersonproducts.com - (See Schedule C2 - Pricing Attachments)	Mobile Brine Maker	3%	call Jim Fountain 810-620-0755 for pricing
53	Henderson Brine Extreme Ultimate MSRP pricing - www.hendersonproducts.com - (See Schedule C2 - Pricing Attachments)	Brine Maker Ultimate	3%	call Jim Fountain 810-620-0755 for pricing
54	Henderson Brine Extreme Truck Fill MSRP pricing - www.hendersonproducts.com - (See Schedule C2 - Pricing Attachments)	Brine Truck Fill system	3%	call Jim Fountain 810-620-0755 for pricing
55	Henderson Bench Press Hoist MSRP pricing - www.hendersonproducts.com - (See Schedule C2 - Pricing Attachments)	Bench Press Hoist	3%	call Jim Fountain 810-620-0755 for pricing
56	Buyers Products MSRP Pricing - www.buyersproducts.com - (See Schedule C2 - Pricing Attachments)	Full line of truck equipment and accessories.	3%	call Jim Fountain 810-620-0755 for pricing
57	Buyers Products MSRP Snow and Ice Maintenance Pricing - www.buyersproducts.com - (See Schedule C2 - Pricing Attachments)	Snow and Ice Maintenance Products	3%	call Jim Fountain 810-620-0755 for pricing
58	Custom items for MDOT(only): The purchase of custom items are permissible. However, the Contractor must provide a detailed quote that includes materials and labor breakdown.			

STATE OF MICHIGAN
ENTERPRISE PROCUREMENT

Department of Technology, Management & Budget
525 W. Allegan Street Lansing, MI 48933
P.O. Box 30026 Lansing, MI 48909

NOTICE OF CONTRACT

NOTICE OF CONTRACT NO. **071B7700087**
between
THE STATE OF MICHIGAN
and

CONTRACTOR	
	Knapheide Truck Equipment Co.
	1200 South Averill
	Flint MI, 48503
	Jim Fountain
	810-620-0755
	jfountain@knapheide.com
	*****0132

STATE			
	Program Manager	Scott Poyer	MDOT
		517-284-6448	
		poyers@michigan.gov	
	Contract Administrator	Yvon Dufour	DTMB
		517-284-6996	
		dufoury@michigan.gov	

CONTRACT SUMMARY			
DESCRIPTION: Equipment Up-Fitting PURCHASE.			
INITIAL EFFECTIVE DATE	**INITIAL EXPIRATION DATE**	**INITIAL AVAILABLE OPTIONS**	**EXPIRATION DATE BEFORE CHANGE(S) NOTED BELOW**
1/13/2017	1/12/2021	2, one year	
PAYMENT TERMS		**DELIVERY TIMEFRAME**	
45 Days		120 days	
ALTERNATE PAYMENT OPTIONS			**EXTENDED PURCHASING**
☐ P-card ☐ Direct Voucher (DV) ☐ Other			☒ Yes ☐ No
MINIMUM DELIVERY REQUIREMENTS			
MISCELLANEOUS INFORMATION			
ESTIMATED CONTRACT VALUE AT TIME OF EXECUTION			**$2,000,000.00**

FOR THE CONTRACTOR:

Knapheide Truck Equipment Co.
Company Name

Authorized Agent Signature

Authorized Agent **(Print or Type)**

Date

FOR THE STATE:

Signature

Name & Title

Agency

Date

STATE OF MICHIGAN

STANDARD CONTRACT TERMS

This STANDARD CONTRACT ("**Contract**") is agreed to between the State of Michigan (the "**State**") and Knapheide Truck Equipment Company ("**Contractor**"), a Michigan Corporation. This Contract is effective on January 13, 2017 ("**Effective Date**"), and unless terminated, expires on January 12, 2021.

This Contract may be renewed for up to two (2) additional one (1) year period(s). Renewal is at the sole discretion of the State and will automatically extend the Term of this Contract. The State will document its exercise of renewal options via Contract Change Notice.

The parties agree as follows:

1. **Duties of Contractor.** Contractor must perform the services and provide the deliverables described in **Schedule A – Statement of Work** (the "**Contract Activities**"). An obligation to provide delivery of any commodity is considered a service and is a Contract Activity.

   Contractor must furnish all labor, equipment, materials, and supplies necessary for the performance of the Contract Activities, and meet operational standards, unless otherwise specified in Schedule A.

   Contractor must: (a) perform the Contract Activities in a timely, professional, safe, and workmanlike manner consistent with standards in the trade, profession, or industry; (b) meet or exceed the performance and operational standards, and specifications of the Contract; (c) provide all Contract Activities in good quality, with no material defects; (d) not interfere with the State's operations; (e) obtain and maintain all necessary licenses, permits or other authorizations necessary for the performance of the Contract; (f) cooperate with the State, including the State's quality assurance personnel, and any third party to achieve the objectives of the Contract; (g) return to the State any State-furnished equipment or other resources in the same condition as when provided when no longer required for the Contract; (h) not make any media releases without prior written authorization from the State; (i) assign to the State any claims resulting from state or federal antitrust violations to the extent that those violations concern materials or services supplied by third parties toward fulfillment of the Contract; (j) comply with all State physical and IT security policies and standards which will be made available upon request; and (k) provide the State priority in performance of the Contract except as mandated by federal disaster response requirements. Any breach under this paragraph is considered a material breach.

   Contractor must also be clearly identifiable while on State property by wearing identification issued by the State, and clearly identify themselves whenever making contact with the State.

2. **Notices.** All notices and other communications required or permitted under this Contract must be in writing and will be considered given and received: (a) when verified by written receipt if sent by courier; (b) when actually received if sent by mail without verification of receipt; or (c) when verified by automated receipt or electronic logs if sent by facsimile or email.

If to State:	If to Contractor:
Yvon Dufour *525 W. Allegan,* *Constitution Hall, 1st Floor NE* *Lansing, MI 48933* *dufoury@michigan.gov* *(517) 284-6996*	Jim Fountain Knapheide Truck Equipment Company 1200 South Averill Avenue Flint, Michigan 48503 jfountain@knapheide.com 810-620-0755

3. **Contract Administrator.** The Contract Administrator for each party is the only person authorized to modify any terms of this Contract, and approve and execute any change under this Contract (each a "**Contract Administrator**"):

State:	Contractor:
Yvon Dufour *525 W. Allegan,* *Constitution Hall, 1st Floor NE* *Lansing, MI 48933* *dufoury@michigan.gov* *(517) 284-6996*	Jim Fountain Knapheide Truck Equipment Company 1200 South Averill Avenue Flint, Michigan 48503 jfountain@knapheide.com 810-620-0755

4. **Program Manager.** The Program Manager for each party will monitor and coordinate the day-to-day activities of the Contract (each a "**Program Manager**"):

State:	Contractor:
Scott Poyer *poyers@michigan.gov* *(517) 284-6448*	Jim Fountain Knapheide Truck Equipment Company 1200 South Averill Avenue Flint, Michigan 48503 jfountain@knapheide.com 810-620-0755

5. **Performance Guarantee**. Contractor must at all times have financial resources sufficient, in the opinion of the State, to ensure performance of the Contract and must provide proof upon request. The State may require a performance bond (as specified in Schedule A) if, in the opinion of the State, it will ensure performance of the Contract.

6. **Insurance Requirements.** Contractor must maintain the insurances identified below and is responsible for all deductibles. All required insurance must: (a) protect the State from claims that may arise out of, are alleged to arise out of, or result from Contractor's or a subcontractor's performance; (b) be primary and non-contributing to any comparable liability insurance (including self-insurance) carried by the State; and (c) be provided by a company with an A.M. Best rating of "A" or better, and a financial size of VII or better.

Required Limits	Additional Requirements
Commercial General Liability Insurance	
Minimal Limits: $1,000,000 Each Occurrence Limit $1,000,000 Personal & Advertising Injury Limit $2,000,000 General Aggregate Limit $2,000,000 Products/Completed Operations Deductible Maximum: $50,000 Each Occurrence	Contractor must have their policy endorsed to add "the State of Michigan, its departments, divisions, agencies, offices, commissions, officers, employees, and agents" as additional insureds using endorsement CG 20 10 11 85, or both CG 2010 07 04 and CG 2037 07 0.
Umbrella or Excess Liability Insurance	
Minimal Limits: $5,000,000 General Aggregate	Contractor must have their policy endorsed to add "the State of Michigan, its departments, divisions, agencies, offices, commissions, officers, employees, and agents" as additional insureds.
Automobile Liability Insurance	
Minimal Limits: $1,000,000 Per Occurrence	Contractor must have their policy: (1) endorsed to add "the State of Michigan, its

	departments, divisions, agencies, offices, commissions, officers, employees, and agents" as additional insureds; and (2) include Hired and Non-Owned Automobile coverage.
Workers' Compensation Insurance	
Minimal Limits: Coverage according to applicable laws governing work activities.	Waiver of subrogation, except where waiver is prohibited by law.
Employers Liability Insurance	
Minimal Limits: $500,000 Each Accident $500,000 Each Employee by Disease $500,000 Aggregate Disease.	

If any of the required policies provide **claims-made** coverage, the Contractor must: (a) provide coverage with a retroactive date before the effective date of the contract or the beginning of Contract Activities; (b) maintain coverage and provide evidence of coverage for at least three (3) years after completion of the Contract Activities; and (c) if coverage is canceled or not renewed, and not replaced with another claims-made policy form with a retroactive date prior to the contract effective date, Contractor must purchase extended reporting coverage for a minimum of three (3) years after completion of work.

Contractor must: (a) provide insurance certificates to the Contract Administrator, containing the agreement or purchase order number, at Contract formation and within 20 calendar days of the expiration date of the applicable policies; (b) require that subcontractors maintain the required insurances contained in this Section; (c) notify the Contract Administrator within 5 business days if any insurance is cancelled; and (d) waive all rights against the State for damages covered by insurance. Failure to maintain the required insurance does not limit this waiver.

This Section is not intended to and is not be construed in any manner as waiving, restricting or limiting the liability of either party for any obligations under this Contract (including any provisions hereof requiring Contractor to indemnify, defend and hold harmless the State).

7. **Administrative Fee and Reporting.** Contractor must pay an administrative fee of 2% on all payments made to Contractor under the Contract including transactions with the State (including its departments, divisions, agencies, offices, and commissions), MiDEAL members, and other states (including governmental subdivisions and authorized entities). Administrative fee payments must be made by check payable to the State of Michigan and mailed to:

   Department of Technology, Management and Budget
   Cashiering
   P.O. Box 30681
   Lansing, MI 48909

   Contractor must submit an itemized purchasing activity report, which includes at a minimum, the name of the purchasing entity and the total dollar volume in sales. Reports should be mailed to DTMB-Procurement.

   The administrative fee and purchasing activity report are due within 30 calendar days from the last day of each calendar quarter.

8. **Extended Purchasing Program.** This contract is extended to MiDEAL members. MiDEAL members include local units of government, school districts, universities, community colleges, and nonprofit hospitals. A current list of MiDEAL members is available at www.michigan.gov/mideal. Upon written agreement between the State and Contractor, this contract may also be extended to: (a) State of Michigan employees and (b) other states (including governmental subdivisions and authorized entities).

If extended, Contractor must supply all Contract Activities at the established Contract prices and terms. The State reserves the right to impose an administrative fee and negotiate additional discounts based on any increased volume generated by such extensions.

Contractor must submit invoices to, and receive payment from, extended purchasing program members on a direct and individual basis.

9. **Independent Contractor.** Contractor is an independent contractor and assumes all rights, obligations and liabilities set forth in this Contract. Contractor, its employees, and agents will not be considered employees of the State. No partnership or joint venture relationship is created by virtue of this Contract. Contractor, and not the State, is responsible for the payment of wages, benefits and taxes of Contractor's employees and any subcontractors. Prior performance does not modify Contractor's status as an independent contractor.

10. **Subcontracting.** Contractor may not delegate any of its obligations under the Contract without the prior written approval of the State. Contractor must notify the State at least 90 calendar days before the proposed delegation, and provide the State any information it requests to determine whether the delegation is in its best interest. If approved, Contractor must: (a) be the sole point of contact regarding all contractual matters, including payment and charges for all Contract Activities; (b) make all payments to the subcontractor; and (c) incorporate the terms and conditions contained in this Contract in any subcontract with a subcontractor. Contractor remains responsible for the completion of the Contract Activities, compliance with the terms of this Contract, and the acts and omissions of the subcontractor. The State, in its sole discretion, may require the replacement of any subcontractor.

11. **Staffing.** The State's Contract Administrator may require Contractor to remove or reassign personnel by providing a notice to Contractor.

12. **Background Checks.** Upon request, Contractor must perform background checks on all employees and subcontractors and its employees prior to their assignment. The scope is at the discretion of the State and documentation must be provided as requested. Contractor is responsible for all costs associated with the requested background checks. The State, in its sole discretion, may also perform background checks.

13. **Assignment.** Contractor may not assign this Contract to any other party without the prior approval of the State. Upon notice to Contractor, the State, in its sole discretion, may assign in whole or in part, its rights or responsibilities under this Contract to any other party. If the State determines that a novation of the Contract to a third party is necessary, Contractor will agree to the novation and provide all necessary documentation and signatures.

14. **Change of Control.** Contractor will notify, at least 90 calendar days before the effective date, the State of a change in Contractor's organizational structure or ownership. For purposes of this Contract, a change in control means any of the following: (a) a sale of more than 50% of Contractor's stock; (b) a sale of substantially all of Contractor's assets; (c) a change in a majority of Contractor's board members; (d) consummation of a merger or consolidation of Contractor with any other entity; (e) a change in ownership through a transaction or series of transactions; (f) or the board (or the stockholders) approves a plan of complete liquidation. A change of control does not include any consolidation or merger effected exclusively to change the domicile of Contractor, or any transaction or series of transactions principally for bona fide equity financing purposes.

    In the event of a change of control, Contractor must require the successor to assume this Contract and all of its obligations under this Contract.

15. **Ordering.** Contractor is not authorized to begin performance until receipt of authorization as identified in Schedule A.

16. **Acceptance.** Contract Activities are subject to inspection and testing by the State within 30 calendar days of the State's receipt of them ("**State Review Period**"), unless otherwise provided in Schedule A. If the Contract Activities are not fully accepted by the State, the State will notify Contractor by the end of the State Review Period that either: (a) the Contract Activities are accepted, but noted deficiencies must be corrected; or (b) the Contract Activities are rejected. If the State finds material deficiencies, it may: (i)

reject the Contract Activities without performing any further inspections; (ii) demand performance at no additional cost; or (iii) terminate this Contract in accordance with Section 23, Termination for Cause.

Within 10 business days from the date of Contractor's receipt of notification of acceptance with deficiencies or rejection of any Contract Activities, Contractor must cure, at no additional cost, the deficiency and deliver unequivocally acceptable Contract Activities to the State. If acceptance with deficiencies or rejection of the Contract Activities impacts the content or delivery of other non-completed Contract Activities, the parties' respective Program Managers must determine an agreed to number of days for re-submission that minimizes the overall impact to the Contract. However, nothing herein affects, alters, or relieves Contractor of its obligations to correct deficiencies in accordance with the time response standards set forth in this Contract.

If Contractor is unable or refuses to correct the deficiency within the time response standards set forth in this Contract, the State may cancel the order in whole or in part. The State, or a third party identified by the State, may perform the Contract Activities and recover the difference between the cost to cure and the Contract price plus an additional 10% administrative fee.

17. **Delivery.** Contractor must deliver all Contract Activities F.O.B. destination, within the State premises with transportation and handling charges paid by Contractor, unless otherwise specified in Schedule A. All containers and packaging becomes the State's exclusive property upon acceptance.

18. **Risk of Loss and Title.** Until final acceptance, title and risk of loss or damage to Contract Activities remains with Contractor. Contractor is responsible for filing, processing, and collecting all damage claims. The State will record and report to Contractor any evidence of visible damage. If the State rejects the Contract Activities, Contractor must remove them from the premises within 10 calendar days after notification of rejection. The risk of loss of rejected or non-conforming Contract Activities remains with Contractor. Rejected Contract Activities not removed by Contractor within 10 calendar days will be deemed abandoned by Contractor, and the State will have the right to dispose of it as its own property. Contractor must reimburse the State for costs and expenses incurred in storing or effecting removal or disposition of rejected Contract Activities.

19. **Warranty Period**. The warranty period, if applicable, for Contract Activities is a fixed period commencing on the date specified in Schedule A. If the Contract Activities do not function as warranted during the warranty period the State may return such non-conforming Contract Activities to the Contractor for a full refund.

20. **Terms of Payment.** Invoices must conform to the requirements communicated from time-to-time by the State. All undisputed amounts are payable within 45 days of the State's receipt. Contractor may only charge for Contract Activities performed as specified in Schedule A. Invoices must include an itemized statement of all charges. The State is exempt from State sales tax for direct purchases and may be exempt from federal excise tax, if Services purchased under this Agreement are for the State's exclusive use. Notwithstanding the foregoing, all prices are inclusive of taxes, and Contractor is responsible for all sales, use and excise taxes, and any other similar taxes, duties and charges of any kind imposed by any federal, state, or local governmental entity on any amounts payable by the State under this Contract.

    The State has the right to withhold payment of any disputed amounts until the parties agree as to the validity of the disputed amount. The State will notify Contractor of any dispute within a reasonable time. Payment by the State will not constitute a waiver of any rights as to Contractor's continuing obligations, including claims for deficiencies or substandard Contract Activities. Contractor's acceptance of final payment by the State constitutes a waiver of all claims by Contractor against the State for payment under this Contract, other than those claims previously filed in writing on a timely basis and still disputed.

    The State will only disburse payments under this Contract through Electronic Funds Transfer (EFT). Contractor must register with the State at http://www.michigan.gov/cpexpress to receive electronic fund transfer payments. If Contractor does not register, the State is not liable for failure to provide payment. Without prejudice to any other right or remedy it may have, the State reserves the right to set off at any time any amount then due and owing to it by Contractor against any amount payable by the State to Contractor under this Contract.

21. **Liquidated Damages.** Liquidated damages, if applicable, will be assessed as described in Schedule A.

22. **Stop Work Order.** The State may suspend any or all activities under the Contract at any time. The State will provide Contractor a written stop work order detailing the suspension. Contractor must comply with the stop work order upon receipt. Within 90 calendar days, or any longer period agreed to by Contractor, the State will either: (a) issue a notice authorizing Contractor to resume work, or (b) terminate the Contract or purchase order. The State will not pay for Contract Activities, Contractor's lost profits, or any additional compensation during a stop work period.

23. **Termination for Cause.** The State may terminate this Contract for cause, in whole or in part, if Contractor, as determined by the State: (a) endangers the value, integrity, or security of any location, data, or personnel; (b) becomes insolvent, petitions for bankruptcy court proceedings, or has an involuntary bankruptcy proceeding filed against it by any creditor; (c) engages in any conduct that may expose the State to liability; (d) breaches any of its material duties or obligations; or (e) fails to cure a breach within the time stated in a notice of breach. Any reference to specific breaches being material breaches within this Contract will not be construed to mean that other breaches are not material.

    If the State terminates this Contract under this Section, the State will issue a termination notice specifying whether Contractor must: (a) cease performance immediately, or (b) continue to perform for a specified period. If it is later determined that Contractor was not in breach of the Contract, the termination will be deemed to have been a Termination for Convenience, effective as of the same date, and the rights and obligations of the parties will be limited to those provided in Section 24, Termination for Convenience.

    The State will only pay for amounts due to Contractor for Contract Activities accepted by the State on or before the date of termination, subject to the State's right to set off any amounts owed by the Contractor for the State's reasonable costs in terminating this Contract. The Contractor must pay all reasonable costs incurred by the State in terminating this Contract for cause, including administrative costs, attorneys' fees, court costs, transition costs, and any costs the State incurs to procure the Contract Activities from other sources.

24. **Termination for Convenience.** The State may immediately terminate this Contract in whole or in part without penalty and for any reason, including but not limited to, appropriation or budget shortfalls. The termination notice will specify whether Contractor must: (a) cease performance of the Contract Activities immediately, or (b) continue to perform the Contract Activities in accordance with Section 25, Transition Responsibilities. If the State terminates this Contract for convenience, the State will pay all reasonable costs, as determined by the State, for State approved Transition Responsibilities.

25. **Transition Responsibilities.** Upon termination or expiration of this Contract for any reason, Contractor must, for a period of time specified by the State (not to exceed 120 calendar days), provide all reasonable transition assistance requested by the State, to allow for the expired or terminated portion of the Contract Activities to continue without interruption or adverse effect, and to facilitate the orderly transfer of such Contract Activities to the State or its designees. Such transition assistance may include, but is not limited to: (a) continuing to perform the Contract Activities at the established Contract rates; (b) taking all reasonable and necessary measures to transition performance of the work, including all applicable Contract Activities, training, equipment, software, leases, reports and other documentation, to the State or the State's designee; (c) taking all necessary and appropriate steps, or such other action as the State may direct, to preserve, maintain, protect, or return to the State all materials, data, property, and confidential information provided directly or indirectly to Contractor by any entity, agent, vendor, or employee of the State; (d) transferring title in and delivering to the State, at the State's discretion, all completed or partially completed deliverables prepared under this Contract as of the Contract termination date; and (e) preparing an accurate accounting from which the State and Contractor may reconcile all outstanding accounts (collectively, "**Transition Responsibilities**"). This Contract will automatically be extended through the end of the transition period.

26. **General Indemnification.** Contractor must defend, indemnify and hold the State, its departments, divisions, agencies, offices, commissions, officers, and employees harmless, without limitation, from and against any and all actions, claims, losses, liabilities, damages, costs, attorney fees, and expenses (including those required to establish the right to indemnification), arising out of or relating to: (a) any breach by Contractor (or any of Contractor's employees, agents, subcontractors, or by anyone else for whose acts any of them may be liable) of any of the promises, agreements, representations, warranties, or insurance requirements contained in this Contract; (b) any infringement, misappropriation, or other violation of any intellectual property right or other right of any third party; (c) any bodily injury, death, or damage to real or tangible personal property occurring wholly or in part due to action or inaction by

Contractor (or any of Contractor's employees, agents, subcontractors, or by anyone else for whose acts any of them may be liable); and (d) any acts or omissions of Contractor (or any of Contractor's employees, agents, subcontractors, or by anyone else for whose acts any of them may be liable).

The State will notify Contractor in writing if indemnification is sought; however, failure to do so will not relieve Contractor, except to the extent that Contractor is materially prejudiced. Contractor must, to the satisfaction of the State, demonstrate its financial ability to carry out these obligations.

The State is entitled to: (i) regular updates on proceeding status; (ii) participate in the defense of the proceeding; (iii) employ its own counsel; and to (iv) retain control of the defense if the State deems necessary. Contractor will not, without the State's written consent (not to be unreasonably withheld), settle, compromise, or consent to the entry of any judgment in or otherwise seek to terminate any claim, action, or proceeding. To the extent that any State employee, official, or law may be involved or challenged, the State may, at its own expense, control the defense of that portion of the claim.

Any litigation activity on behalf of the State, or any of its subdivisions under this Section, must be coordinated with the Department of Attorney General. An attorney designated to represent the State may not do so until approved by the Michigan Attorney General and appointed as a Special Assistant Attorney General.

27. **Infringement Remedies.** If, in either party's opinion, any piece of equipment, software, commodity, or service supplied by Contractor or its subcontractors, or its operation, use or reproduction, is likely to become the subject of a copyright, patent, trademark, or trade secret infringement claim, Contractor must, at its expense: (a) procure for the State the right to continue using the equipment, software, commodity, or service, or if this option is not reasonably available to Contractor, (b) replace or modify the same so that it becomes non-infringing; or (c) accept its return by the State with appropriate credits to the State against Contractor's charges and reimburse the State for any losses or costs incurred as a consequence of the State ceasing its use and returning it.

28. **Limitation of Liability.** The State is not liable for consequential, incidental, indirect, or special damages, regardless of the nature of the action.

29. **Disclosure of Litigation, or Other Proceeding.** Contractor must notify the State within 14 calendar days of receiving notice of any litigation, investigation, arbitration, or other proceeding (collectively, "**Proceeding**") involving Contractor, a subcontractor, or an officer or director of Contractor or subcontractor, that arises during the term of the Contract, including: (a) a criminal Proceeding; (b) a parole or probation Proceeding; (c) a Proceeding under the Sarbanes-Oxley Act; (d) a civil Proceeding involving: (1) a claim that might reasonably be expected to adversely affect Contractor's viability or financial stability; or (2) a governmental or public entity's claim or written allegation of fraud; or (e) a Proceeding involving any license that Contractor is required to possess in order to perform under this Contract.

30. **Reserved.**

31. **Reserved.**

32. **Non-Disclosure of Confidential Information**. The parties acknowledge that each party may be exposed to or acquire communication or data of the other party that is confidential, privileged communication not intended to be disclosed to third parties. The provisions of this Section survive the termination of this Contract.

    a. Meaning of Confidential Information. For the purposes of this Contract, the term "**Confidential Information**" means all information and documentation of a party that: (a) has been marked "confidential" or with words of similar meaning, at the time of disclosure by such party; (b) if disclosed orally or not marked "confidential" or with words of similar meaning, was subsequently summarized in writing by the disclosing party and marked "confidential" or with words of similar meaning; and, (c) should reasonably be recognized as confidential information of the disclosing party. The term "Confidential Information" does not include any information or documentation that was: (a) subject to disclosure under the Michigan Freedom of Information Act (FOIA); (b) already in the possession of the receiving party without an obligation of confidentiality; (c) developed independently by the receiving party, as demonstrated by the receiving party, without violating the disclosing party's proprietary rights; (d) obtained from a source other than the

disclosing party without an obligation of confidentiality; or, (e) publicly available when received, or thereafter became publicly available (other than through any unauthorized disclosure by, through, or on behalf of, the receiving party). For purposes of this Contract, in all cases and for all matters, State Data is deemed to be Confidential Information.

b. Obligation of Confidentiality. The parties agree to hold all Confidential Information in strict confidence and not to copy, reproduce, sell, transfer, or otherwise dispose of, give or disclose such Confidential Information to third parties other than employees, agents, or subcontractors of a party who have a need to know in connection with this Contract or to use such Confidential Information for any purposes whatsoever other than the performance of this Contract. The parties agree to advise and require their respective employees, agents, and subcontractors of their obligations to keep all Confidential Information confidential. Disclosure to a subcontractor is permissible where: (a) use of a subcontractor is authorized under this Contract; (b) the disclosure is necessary or otherwise naturally occurs in connection with work that is within the subcontractor's responsibilities; and (c) Contractor obligates the subcontractor in a written contract to maintain the State's Confidential Information in confidence. At the State's request, any employee of Contractor or any subcontractor may be required to execute a separate agreement to be bound by the provisions of this Section.

c. Cooperation to Prevent Disclosure of Confidential Information. Each party must use its best efforts to assist the other party in identifying and preventing any unauthorized use or disclosure of any Confidential Information. Without limiting the foregoing, each party must advise the other party immediately in the event either party learns or has reason to believe that any person who has had access to Confidential Information has violated or intends to violate the terms of this Contract and each party will cooperate with the other party in seeking injunctive or other equitable relief against any such person.

d. Remedies for Breach of Obligation of Confidentiality. Each party acknowledges that breach of its obligation of confidentiality may give rise to irreparable injury to the other party, which damage may be inadequately compensable in the form of monetary damages. Accordingly, a party may seek and obtain injunctive relief against the breach or threatened breach of the foregoing undertakings, in addition to any other legal remedies which may be available, to include, in the case of the State, at the sole election of the State, the immediate termination, without liability to the State, of this Contract or any Statement of Work corresponding to the breach or threatened breach.

e. Surrender of Confidential Information upon Termination. Upon termination of this Contract or a Statement of Work, in whole or in part, each party must, within 5 calendar days from the date of termination, return to the other party any and all Confidential Information received from the other party, or created or received by a party on behalf of the other party, which are in such party's possession, custody, or control; provided, however, that Contractor must return State Data to the State following the timeframe and procedure described further in this Contract. Should Contractor or the State determine that the return of any Confidential Information is not feasible, such party must destroy the Confidential Information and must certify the same in writing within 5 calendar days from the date of termination to the other party. However, the State's legal ability to destroy Contractor data may be restricted by its retention and disposal schedule, in which case Contractor's Confidential Information will be destroyed after the retention period expires.

33. Reserved.

34. Reserved.

35. Reserved.

36. Records Maintenance, Inspection, Examination, and Audit. The State or its designee may audit Contractor to verify compliance with this Contract. Contractor must retain, and provide to the State or its designee and the auditor general upon request, all financial and accounting records related to the Contract through the term of the Contract and for 4 years after the latter of termination, expiration, or final payment under this Contract or any extension ("**Audit Period**"). If an audit, litigation, or other action involving the records is initiated before the end of the Audit Period, Contractor must retain the records until all issues are resolved.

Within 10 calendar days of providing notice, the State and its authorized representatives or designees have the right to enter and inspect Contractor's premises or any other places where Contract Activities are being performed, and examine, copy, and audit all records related to this Contract. Contractor must cooperate and provide reasonable assistance. If any financial errors are revealed, the amount in error must be reflected as a credit or debit on subsequent invoices until the amount is paid or refunded. Any remaining balance at the end of the Contract must be paid or refunded within 45 calendar days.

This Section applies to Contractor, any parent, affiliate, or subsidiary organization of Contractor, and any subcontractor that performs Contract Activities in connection with this Contract.

37. **Warranties and Representations.** Contractor represents and warrants: (a) Contractor is the owner or licensee of any Contract Activities that it licenses, sells, or develops and Contractor has the rights necessary to convey title, ownership rights, or licensed use; (b) all Contract Activities are delivered free from any security interest, lien, or encumbrance and will continue in that respect; (c) the Contract Activities will not infringe the patent, trademark, copyright, trade secret, or other proprietary rights of any third party; (d) Contractor must assign or otherwise transfer to the State or its designee any manufacturer's warranty for the Contract Activities; (e) the Contract Activities are merchantable and fit for the specific purposes identified in the Contract; (f) the Contract signatory has the authority to enter into this Contract; (g) all information furnished by Contractor in connection with the Contract fairly and accurately represents Contractor's business, properties, finances, and operations as of the dates covered by the information, and Contractor will inform the State of any material adverse changes; and (h) all information furnished and representations made in connection with the award of this Contract is true, accurate, and complete, and contains no false statements or omits any fact that would make the information misleading. A breach of this Section is considered a material breach of this Contract, which entitles the State to terminate this Contract under Section 23, Termination for Cause.

38. **Conflicts and Ethics.** Contractor will uphold high ethical standards and is prohibited from: (a) holding or acquiring an interest that would conflict with this Contract; (b) doing anything that creates an appearance of impropriety with respect to the award or performance of the Contract; (c) attempting to influence or appearing to influence any State employee by the direct or indirect offer of anything of value; or (d) paying or agreeing to pay any person, other than employees and consultants working for Contractor, any consideration contingent upon the award of the Contract. Contractor must immediately notify the State of any violation or potential violation of these standards. This Section applies to Contractor, any parent, affiliate, or subsidiary organization of Contractor, and any subcontractor that performs Contract Activities in connection with this Contract.

39. **Compliance with Laws.** Contractor must comply with all federal, state and local laws, rules and regulations.

40. **Reserved.**

41. **Reserved.**

42. **Nondiscrimination.** Under the Elliott-Larsen Civil Rights Act, 1976 PA 453, MCL 37.2101, *et seq*., and the Persons with Disabilities Civil Rights Act, 1976 PA 220, MCL 37.1101, *et seq*., Contractor and its subcontractors agree not to discriminate against an employee or applicant for employment with respect to hire, tenure, terms, conditions, or privileges of employment, or a matter directly or indirectly related to employment, because of race, color, religion, national origin, age, sex, height, weight, marital status, or mental or physical disability. Breach of this covenant is a material breach of this Contract.

43. **Unfair Labor Practice.** Under MCL 423.324, the State may void any Contract with a Contractor or subcontractor who appears on the Unfair Labor Practice register compiled under MCL 423.322.

44. **Governing Law.** This Contract is governed, construed, and enforced in accordance with Michigan law, excluding choice-of-law principles, and all claims relating to or arising out of this Contract are governed by Michigan law, excluding choice-of-law principles. Any dispute arising from this Contract must be resolved in Michigan Court of Claims. Contractor consents to venue in Ingham County, and waives any objections, such as lack of personal jurisdiction or *forum non conveniens*. Contractor must appoint agents in Michigan to receive service of process.

45. **Non-Exclusivity.** Nothing contained in this Contract is intended nor will be construed as creating any requirements contract with Contractor. This Contract does not restrict the State or its agencies from acquiring similar, equal, or like Contract Activities from other sources.

46. **Force Majeure.** Neither party will be in breach of this Contract because of any failure arising from any disaster or acts of god that are beyond their control and without their fault or negligence. Each party will use commercially reasonable efforts to resume performance. Contractor will not be relieved of a breach or delay caused by its subcontractors. If immediate performance is necessary to ensure public health and safety, the State may immediately contract with a third party.

47. **Dispute Resolution.** The parties will endeavor to resolve any Contract dispute in accordance with this provision. The dispute will be referred to the parties' respective Contract Administrators or Program Managers. Such referral must include a description of the issues and all supporting documentation. The parties must submit the dispute to a senior executive if unable to resolve the dispute within 15 business days. The parties will continue performing while a dispute is being resolved, unless the dispute precludes performance. A dispute involving payment does not preclude performance.

    Litigation to resolve the dispute will not be instituted until after the dispute has been elevated to the parties' senior executive and either concludes that resolution is unlikely, or fails to respond within 15 business days. The parties are not prohibited from instituting formal proceedings: (a) to avoid the expiration of statute of limitations period; (b) to preserve a superior position with respect to creditors; or (c) where a party makes a determination that a temporary restraining order or other injunctive relief is the only adequate remedy. This Section does not limit the State's right to terminate the Contract.

48. **Media Releases.** News releases (including promotional literature and commercial advertisements) pertaining to the Contract or project to which it relates must not be made without prior written State approval, and then only in accordance with the explicit written instructions of the State.

49. **Website Incorporation.** The State is not bound by any content on Contractor's website unless expressly incorporated directly into this Contract.

50. **Entire Agreement and Order of Precedence.** This Contract, which includes Schedule A – Statement of Work, and expressly incorporated schedules and exhibits, is the entire agreement of the parties related to the Contract Activities. This Contract supersedes and replaces all previous understandings and agreements between the parties for the Contract Activities. If there is a conflict between documents, the order of precedence is: (a) first, this Contract, excluding its schedules, exhibits, and Schedule A – Statement of Work; (b) second, Schedule A – Statement of Work as of the Effective Date; and (c) third, schedules expressly incorporated into this Contract as of the Effective Date. NO TERMS ON CONTRACTOR'S INVOICES, ORDERING DOCUMENTS, WEBSITE, BROWSE-WRAP, SHRINK-WRAP, CLICK-WRAP, CLICK-THROUGH OR OTHER NON-NEGOTIATED TERMS AND CONDITIONS PROVIDED WITH ANY OF THE CONTRACT ACTIVITIES WILL CONSTITUTE A PART OR AMENDMENT OF THIS CONTRACT OR IS BINDING ON THE STATE FOR ANY PURPOSE. ALL SUCH OTHER TERMS AND CONDITIONS HAVE NO FORCE AND EFFECT AND ARE DEEMED REJECTED BY THE STATE, EVEN IF ACCESS TO OR USE OF THE CONTRACT ACTIVITIES REQUIRES AFFIRMATIVE ACCEPTANCE OF SUCH TERMS AND CONDITIONS.

51. **Severability.** If any part of this Contract is held invalid or unenforceable, by any court of competent jurisdiction, that part will be deemed deleted from this Contract and the severed part will be replaced by agreed upon language that achieves the same or similar objectives. The remaining Contract will continue in full force and effect.

52. **Waiver.** Failure to enforce any provision of this Contract will not constitute a waiver.

53. **Survival.** The provisions of this Contract that impose continuing obligations, including warranties and representations, termination, transition, insurance coverage, indemnification, and confidentiality, will survive the expiration or termination of this Contract.

54. **Contract Modification.** This Contract may not be amended except by signed agreement between the parties (a "**Contract Change Notice**"). Notwithstanding the foregoing, no subsequent Statement of Work or Contract Change Notice executed after the Effective Date will be construed to amend this Contract unless it specifically states its intent to do so and cites the section or sections amended.

STATE OF MICHIGAN

Contract No. 071B7700087
Agricultural, Grounds, Turf, Earth Moving, and Roadside Maintenance Equipment

SCHEDULE A
STATEMENT OF WORK
CONTRACT ACTIVITIES

This schedule identifies the requirements of this Contract.

This contract includes equipment for PURCHASE.

The Contractor must provide deliverables, including the staffing to accomplish all service incidentals necessary to complete the work, as set forth in this contract.

REQUIREMENTS
SCOPE OF WORK
1. Specifications **1.1 The Contractor must provide the following Equipment for purchase, rent, and/or lease per Schedule B, Specifications:** **FOR PURCHASE** **Awarded:** **2. C03-2001LG-16 Lift Gate** **3. C03-2001SP-16 Snow Plow** **6. C03-20CU11-16 Utility Body** **21. C60-2001-16 Combination Spreader with High Speed Anti Icing** **Not Awarded:** **1. C03-2001CD-16 Dump Body** **5. C03-2011CD-16 Dump Body TB FT** **7. C03-3001CAP-16 Cap for Pickup**

A. EQUIPMENT FOR PURCHASE

1. Warranties

a) Contractor shall provide a one (1) year warranty on parts and labor or the manufacturer's warranty, whichever is greater.

b) The State shall report a warranty claim with the Contractor. Arrangements shall be made for warranty service. Warranty service shall be provided by factory-trained technicians at a Michigan dealership upon notification.

The State reserves the right to require additional warranties.

2. Recall Requirements and Procedures
The Contractor shall notify the State and/or the ordering entity within 48 hours of a recall notice via email.

3. Service Levels
3.1 Time Frames
All Contract Activities must be delivered within **120** calendar days from receipt of order. The receipt of order date is pursuant to Section 2, Notice provisions of the Standard Contract Terms.

3.2 Delivery

Delivery will be expected within **180** calendar days for special orders and out of stock items, and **120** calendar days for standard items, upon date of order. Delivery will be made to the requested location and shall be F.O.B. Delivered or charged on a mileage rate or a one-time charge per **Schedule C1 - Pricing.**

The State prefers Delivery terms that would provide unencumbered service with the most competitive rates.

F.O.B. dealership Items

Prices shall be quoted "F.O.B. Dealership" with transportation charges prepaid to the primary Contractor location on all orders for State of Michigan and Extended Purchasing Participants. Contractors must also quote a delivery cost per **Schedule C1 – Pricing**, to facilitate calculation of delivery cost to various locations within Michigan. The delivery cost per **Schedule C1 – Pricing,** will be added to the equipment price quoted to determine the "Total Price" for "F.O.B. Dealership" items. Mileage will be calculated based upon the "Official Michigan Department of Transportation Highway Map". Other F.O.B. terms will not be accepted and may disqualify a dealer from further consideration. The State reserves the right to make their own shipping arrangements.

Freight Charges - Should an Agency order items that are below the minimum order requirement of the Contract, or should a Contractor quote F.O.B. Shipping Point on one-time purchases, the Contractor should choose the most economically advantageous carrier and must be approved by the using agency.

United Parcel Service (UPS) must be used in instances where the weight of the shipment is less than 150 lbs., or where shipments could be separated into smaller parcels such as three (3) 50 lb. packages.

If the Contractor fails to follow these shipping instructions, the State shall pay the shipping costs on the Contractor's invoice, minus the difference for the amount that was charged and the amount that would have been charged if the requested carrier had been used. The State reserves the right to arrange their own freight.

3.3 Training
The Contractor must provide the following training:

a) A comprehensive orientation training shall be provided at delivery or at an alternate time requested by the State. The training shall include equipment operation, maintenance, and inspection practices.

b) Upon request, the Contractor shall provide 8 hours of mechanics and operators training for up to eight (8) employees. The training is to be held at each ship to address. The Contractor shall provide unit pricing for training in **Schedule C1, Pricing.**

B. GENERAL REQUIREMENTS

1.1 Technical Support and Repairs

When providing technical support, the Call Center must resolve the caller's issue within **30** minutes. If the caller's issue cannot be resolved within **2** hours, on-site service must be scheduled. The on-site service must be performed within **36** hours of the time the issue was scheduled for service.

1.2 Reporting
If applicable, the Contractor must submit, to the Contract Administrator or their designee, the following written reports:

a) *Maintenance/service report*
b) *Regional rental report*
c) *Regional purchase report*

By the second Friday of every December, the Contractor must submit a report of recycled content in commodities sold in that calendar year to **the Contract Administrator or Designee.**

1.3 Meetings

The Contractor must attend the following meetings:

a) Kick-off meeting within 30 calendar days of the Effective Date.

b) The State may request other meetings, as it deems appropriate.

2. Staffing

2.1 Contractor Representative

The Contractor must appoint a Product Representative, specifically assigned to State of Michigan accounts, that will respond to State inquiries regarding the Contract Activities, answering questions related to ordering and delivery, etc. (the "Contractor Representative").

Jim Fountain – Outside Sales
1200 South Averill
Flint, Mi 48503
810-620-0755
jfountain@knapheide.com

The Contractor must notify the Contract Administrator at least **30** calendar days before removing or assigning a new Contractor Representative.

2.2 Customer Service Toll-Free Number & Technical Support, Repairs and Maintenance

a) The Contractor must specify its toll-free number for the State to make contact with the Contractor Representative. The Contractor Representative must be available for calls during the hours of 7 am to 5 pm EST.

b) The Contractor must specify its toll-free number for the State to make contact with the Contractor for technical support, repairs, and maintenance. The Contractor must be available for calls and service during the hours of 7 am to 5 pm EST.

800-589-9100

2.4 Disclosure of Subcontractors

If the Contractor intends to utilize subcontractors, the Contractor must disclose the following:

a) The legal business name; address; telephone number; a description of subcontractor's organization and the services it will provide; and information concerning subcontractor's ability to provide the Contract Activities.

b) The relationship of the subcontractor to the Contractor.

c) Whether the Contractor has a previous working experience with the subcontractor. If yes, provide the details of that previous relationship.

d) A complete description of the Contract Activities that will be performed or provided by the subcontractor.

e) The price of the subcontractor's work.

2.5 Security

The Contractor's staff may be required to make deliveries to, or enter State facilities. The Contractor must:

a) Provide a State issued picture ID.

3. Pricing

3.1 Price Term

a) Pricing is firm for a 365 day period ("Pricing Period"). The first pricing period begins on the Effective Date. Adjustments may be requested, in writing, by either party and will take effect no earlier than the next Pricing Period. The State reserves the right to adjust the pricing period and allow automatic updates with limitations.

b) Pricing on all items listed in **Schedule B, Specifications** (or approved alternates) shall be firm-fixed. All remaining items within Contractor's **"catalog"** shall be available at a firm-fixed discount. All **"catalog"** pricing must be published and available at all times via website access, and/or electronic/printed price pages. Price quotes issued from the Contractor to the State must be verifiable via published pricing. The State reserves the right to limit "catalog" items at any time for any reason. It is expected the Contractor's Catalog items shall provide the best prices available to the State at all times and be firm-fixed. The State may remove items from the "Catalog" at any time without cause. Catalog pricing shall be submitted in the "Catalog Pricing" page**, of Schedule C1 – Pricing.**

3.2 Price Changes

a) Adjustments will be based on changes in actual Contractor costs. Any request must be supported by written evidence documenting the change in costs. The State may consider sources, such as the Consumer Price Index; Producer Price Index; other pricing indices as needed; economic and industry data; manufacturer or supplier letters noting the increase in pricing; and any other data the State deems relevant.

b) Following the presentation of supporting documentation, both parties will have 30 days to review the information and prepare a written response. If the review reveals no need for modifications, pricing will remain unchanged unless mutually agreed to by the parties. If the review reveals that changes are needed, both parties will negotiate such changes, for no longer than 30 days, unless extended by mutual agreement.

c) The Contractor remains responsible for Contract Activities at the current price for all orders received before the mutual execution of a Change Notice indicating the start date of the new Pricing Period.

4. Ordering

4.1 Authorizing Document

The appropriate authorizing document for the Contract will be a purchase order.

4.2 Order Verification

The Contractor must have internal controls, to verify abnormal orders and to ensure that only authorized individuals place orders.

5. Acceptance

5.1 Acceptance, Inspection and Testing

The State will use the following criteria to determine acceptance of the Contract Activities:

a) Purchased equipment shall be delivered in new condition. Damaged equipment will not be accepted. The Contractor will repair or replace the damaged equipment at the Contractor's expense.

b) The Contractor shall provide documentation upon delivery that provides itemized deliverables.

c) Acceptance is not complete for partial deliveries until final deliverables are received.

5.2 Final Acceptance

a) The Contractor shall deliver the equipment. The State, or their designee, shall inspect the equipment and approve acceptance of goods upon delivery.

b) All set-up and/or training and orientation shall be completed.

6. Invoice and Payment

6.1 Invoice Requirements

All invoices submited to the State must include: (a) date; (b) purchase order; (c) quantity; (d) itemized description of the Contract Activities; (e) unit price; (f) shipping cost (if any); (g) total price; and (h) contract number.

7. Payment Methods

The State will make payment for Contract Activities by EFT as outlined in section 20 of Standard Contract Terms.

8. Additional Requirements

8.1 Environmental and Energy Efficient Products

The Contractor must include any relevant third-party certification, including the verification of a United States department of agriculture certified bio based product label.
The Contractor shall identify any energy efficient, bio-based, or otherwise environmental friendly products used in their products to the Program Manager (PM) 2 weeks prior to delivery.

8.2 Recycled Content and Recyclability Deliverable(s).

Without compromising performance or quality, the State prefers Deliverable(s) containing higher percentages of recycled materials. The Contractor must indicate an estimate of the percentage of recycled materials, if any, contained in each Deliverable:

- (total estimated percentage of recovered material)
- (estimated percentage of post-consumer material)
- (estimated percentage of post-industrial waste)

8.3 Hazardous Chemical Identification

In accordance with the federal Emergency Planning and Community Right-to-Know Act, 42 USC 11001, *et seq.*, as amended, the Contractor must provide a Safety Data Sheet (SDS) listing any hazardous chemicals, as defined in 40 CFR §370.2, to be delivered. Each hazardous chemical must be properly identified, including any applicable identification number, such as a National Stock Number or Special Item Number.
The Contractor must identify any hazardous chemicals that will be provided under any resulting contract.

The Contractor shall provide all current SDS to the Program Manager (PM) 2 weeks prior to delivery.

8.4 Mercury Content

Pursuant to MCL 18.1261d, mercury-free products must be procured when possible. The Contractor must explain if it intends to provide products containing mercury, the amount or concentration of mercury, and whether cost competitive alternatives exist. If a cost competitive alternative does exist, the Contractor must provide justification as to why the particular product is essential. All products containing mercury must be labeled as containing mercury.
The Contractor shall report if it intends to provide products containing mercury to the Program Manager (PM) no later than 48 hours after a purchase order is issued.

8.5 Brominated Flame Retardants

The State prefers to purchase products that do not contain brominated flame retardants (BFRs) whenever possible. The Contractor must disclose whether the products contain BFRs.
The Contractor must disclose to the Program Manager (PM) whether their products contain BFRs no later than 48 hours after a purchase order is issued.

8.6 Key Personnel

The Contractor must appoint one individual(s) who will be directly responsible for the day to day operations of the Contract ("Key Personnel"). Key Personnel must be specifically assigned to the State account, be knowledgeable on the contractual requirements, and respond to State inquires within 8 hours.

Jim Fountain – Outside Sales
6061 West Columbia Rd.
Mason, MI 48854
810-620-0755
jfountain@knapheide.com

The Contractor may not remove or assign Key Personnel without the prior consent of the State. Prior consent is not required for reassignment for reasons beyond the Contractor's control, including illness, disability, death, leave of absence, personal emergency circumstances, resignation, or termination for cause. The State may request a résumé and conduct an interview before approving a change. The State may require a 30 calendar day training period for replacement personnel.

8.8 Organizational Chart

Curtis Steele General Manager

Kristy Nichols Materials Manager	Andy Knake Sales Manager	Bill Sprague Production Manager
Inventory/Purchasing/traffic	Inside/Outside Sales	Shop production/paint/quality
	Jim Fountain Municipal Sales	
	Danny Nowicki Municipal Sales	
	Jim Ott Commercial Sales	
	Steven Walker Commercial Sales	

9. Invoice Credits

Late or improper completion of the Contract Activities will cause loss and damage to the State and Extending Purchasing Participants and it would be impracticable and extremely difficult to fix the actual damage sustained by the State and/or Extending Purchasing Participants. Therefore, if there is late or improper completion of the Contract Activities, the State, and the Ordering Entity are entitled to collect invoice credits in the amount of 2/10th of 1% of the Purchase Order for each day the Contractor fails to remedy the late or improper completion of the Work.

10. Liquidated Damages

Unauthorized Removal of Key Personnel will interfere with the timely and proper completion of the Contract, to the loss and damage of the State, and it would be impracticable and extremely difficult to fix the actual damage sustained by the State. Therefore, the State may assess liquidated damages against Contractor as specified below.

The State is entitled to collect $500 per individual per day for the removal of any Key Personnel without prior approval of the State.

The State is entitled to collect $500 per individual per day for an unapproved or untrained key personnel replacement.

STATE OF MICHIGAN

Contract No. 071B7700087

Agricultural, Grounds, Turf, Earth Moving, and Roadside Maintenance Equipment

SCHEDULE B
SPECIFICATIONS

Spec #	**Equipment** - Purchase
	SPEC SECTION
1	**C03-2001CD-16 Dump Body**
2	**C03-2001LG-16 Lift Gate**
3	**C03-2001SP-16 Snow Plow**
5	**C03-2011CD-16 Dump Body TB FT**
6	**C03-20CU11-16 Utility Body**
7	**C03-3001CAP-16 Cap for Pickup**
21	**C60-2001-16 Combination Spreader with High Speed Anti Icing**

1. - Spec. No. C03-2001CD-16		
9 FOOT DUMP BODY WITH FOLD DOWN SIDES, ELECTRIC OVER HYDRAULIC SYSTEM MOUNTED ON A DUAL REAR WHEEL CAB & CHASSIS SUPPLIED BY MDOT		
1.1	Winning bidder shall be notified when units are available for dump body with hydraulic hoist installation. 90 day required delivery date shall start on this date	Yes
1.2	Winning bidder shall pick up units at MDOT's OAS Fleet Operations, 2522 W. Main St., Lansing, MI, 48917 for installation of dump body with hydraulic hoist	Yes
1.3	Cab & chassis will be full of fuel before winning vendor picks them up and completed units shall be returned to MDOT in the same manner	Yes
1.4	Delivery of the completed trucks shall be to MDOT's Fleet Operations Facility, 2522 W. Main St., Lansing, MI, 48917 between the hours of 8:00am and 3:00pm, Monday through Friday, except public holidays. Bidder shall contact Fleet Operations at least 24 hours prior to pick up or delivery	Yes
1.5	All holes in cab and chassis frame rails shall be drilled or punched. **There shall be no flame/plasma cutting or welding on the frame side rails**	Yes
1.6	Dump body shall have all bare metal surfaces pre-cleaned and prepped prior to applying a compatible two part epoxy primer	Yes
1.7	When painting continues over a manufacturer's standard paint, metal prepping and primer may be omitted, providing an acceptable bond can be achieved	Yes
1.8	Dump body shall be painted matching Cab & chassis Paint code	Yes
1.9	Dump body hoist and sub-frame shall be painted black	Yes
1.10	Cab to end frame length on all body installations shall be the same length as the body being mounted, plus the length of any setback, frame extensions are not acceptable	Yes
1.11	All wiring passing through holes in metal or non-metal wearing surfaces, which could cause wear of the insulation, shall be adequately protected by rubber or plastic grommets, and/or non-metallic conduit. Ends of all wires shall be adequately anchored to prevent loosening. All connections shall be soldered and enclosed in heat shrink. Scotch locks are **not** acceptable	Yes
1.12	Factory paint codes shall be provided and aftermarket brand and paint codes shall be provided	Yes
1.13	Mud flaps shall be anti-sail type, plain rubber, ¼ inch thick, with **NO** advertising on either side, provided and installed by vendor	Yes
1.14	Per Schedule E - Trailer Wiring Diagram, trailer connector shall be 7-way round pin Berg type , mounted at rear of frame, wired for turn signals independent of stop, compatible with trailers that have amber or side turn lamps, provided and installed by vendor	Yes
1.15	Dump body and hoist shall be mounted directly behind the truck cab	Yes
1.16	All horizontal surfaces of dump body shall be dirt shedding	
1.17	Dump body dimensions shall be approximately 9 feet long inside and 87 inches wide outside	Yes
1.18	Understructure shall be western-style cross-memberless	Yes

1.19	Longsills shall be fabricated trapezoidal design, of 10 gauge steel	Yes
1.20	Longsills shall be 7 inch height maximum	Yes
1.21	Longsill interior shall be coated with SG-50A corrosion preventative compound	Yes
1.22	Dump body floor shall be 7 gauge steel minimum	Yes
1.23	Sides and tailgate shall be 12 gauge steel minimum	Yes
1.24	Rear corner pillars shall have FMVSS #108 clearance lights mounted in rubber grommets	Yes
1.25	Rear apron shall have three (3) FMVSS #108 lights mounted in rubber grommets connected with one-piece wiring harness	Yes
1.26	Sides shall fold down with single lever control, be 14 inch height minimum and have greaseable hinges welded to underside of body	Yes
1.27	Fold down sides shall be limited in their travel by a channel iron welded to the underside of body and rubber bumper so they don't rub on rear tires	Yes
1.28	Sides shall be reinforced with braces and provide pockets for side boards	Yes
1.29	Sides shall be of internal tapered design to keep material from collecting and hampering side operation	Yes
1.30	Lock pin holes for sides shall be punched or drilled, flame or plasma cutting of holes is NOT acceptable	Yes
1.31	Tailgate shall be double acting, single lever control, reinforced with braces, 1-¼ inch pins top and bottom, and 20 inch height minimum	Yes
1.32	Top and bottom of tailgate shall be formed box design for added strength	Yes
1.33	Tailgate top hinge plate shall be heavy duty, 1 inch minimum bearing surface for the hinge pins	Yes
1.34	Tailgate hinge pins shall be 1-¼ inch C1045 cold rolled steel, lubricated by grease zerk	Yes
1.35	Latch fingers shall be 1 inch thick	Yes
1.36	Tailgate lower release mechanism shall be lubricated by grease zerk	Yes
1.37	Head sheet shall be reinforced with braces	Yes
1.38	Head sheet and cab protector shall be one piece, integral, 10 gauge steel minimum with pressed in "V" brace for added strength and have full screened bulkhead, height of cab protector shall be determined at post award meeting	Yes
1.39	Hoist shall be Crysteel LB510 or approved alternate	Galion CS615T-09
1.40	Hoist shall be:	
	a. NTEA Class "C" or Class 30 scissors under body type	Class 40 exceed
	b. Double acting, 12 volt electric over hydraulic power unit with momentary switch to be mounted in dash	Yes
	c. 5-½ inch cylinder bore	Yes
	d. 15-¼ cylinder stroke	Yes
	e. 2 inch diameter chromed cylinder shaft	Yes
	f. Cylinder port size shall be 9/16-18 ORB	Yes
	g. 3250psi operating pressure	Yes
	h. 9-¾ inch above frame mounting height	Yes
	i. Sub frame to be full length, 3-¾ inch tall, fabricated "C" channel frame rails, 10 gauge steel	Yes
	j. Rear hinge shall be 3-½ inch x 2-½ inch x ¼ inch x 36-½ inch structural angle	Yes
	k. 1-5/16 inch x 4-3/8 inch greaseable hinge pins	Yes
1.41	Dump angle shall be 45°	50 degree exceed
1.42	Hoist controls shall be push button mounted on dash, floor mount controls are NOT acceptable	Yes
1.43	Controls shall be automatic return to center type	Yes
1.44	Dump body shall stop movement either up or down when controls are released	Yes
1.45	Hydraulics shall be electric over hydraulic with pump, reservoir, and valve	Yes
1.46	A "body raised" light shall be mounted in the dash to illuminate when body is not in the down position	Yes
1.47	Back up alarm shall be electric, moisture resistant, approximately 95dba	Yes
1.48	Rear bumper shall be I.C.C. type with hitch plate having 16 inch ground clearance	Yes
1.49	Hitch plate shall be ¾ inch x 34 inch x 24 inch, bolted and welded to the chassis frame, drilled for multiple pintle hitch positions and include a receiver tube mounted at 17 inches at the bottom	Yes
1.50	D-rings for safety chains with a capacity for 10 ton trailer shall be installed on the hitch plate (location to be determined at pre-construction meeting)	Yes
1.51	Lights shall be LED type and include:	Yes
	a. Clearance lights	Yes

	b. Rear stop	Yes
	c. Rear turn	Yes
	d. Rear tail	Yes
	e. Backup	Yes
1.52	All lights shall conform to all laws of the State of Michigan	Yes
1.53	All items removed from cab and chassis by body installer (frame ends, fuel tanks, etc…) remain the property of the State of Michigan and are to be returned with the truck	Yes
1.54	"Body raised" light shall be activated by an epoxy sealed, magnetic proximity switch, Grainger part # 6C834 or Omron type TL-W20ME2 12V - 24V **No Exceptions**	Yes
1.55	OEM tail lights shall be remounted in the hitch plate	Yes
1.56	LED stop, tail, and turn lights shall be mounted in the corner posts of dump body	Yes
1.57	Rear corner posts shall have oval light cutouts, rear facing, one to each post for stop, tail and turn light. Lights to be furnished shall be Sound off ECV062STT or equivalent. Rear stop, tail and turn lights to be inside the outline of the corner post. Mounting boxes that extend past corner post are not acceptable	Yes
1.58	LED flasher lights in rear post pillars, wired to flash in synchronization	Yes
1.59	Go-light with wireless control on the roof of the cab	Yes
1.60	Body prop shall support empty body weight	Yes
1.61	Vendor shall supply and install one Roll Rite window shade style tarp system Model number 62655-88 or approved alternate for each body	Yes
1.62	Tarp system shall be window shade type	Yes
1.63	Tarp system shall have aluminum wind guard	Yes
1.64	Tarp shall be mesh type 84" X 12'	Yes
1.65	Tarp shall be mounted to the head sheet of the dump body, exact location to be determined at preconstruction meeting	Yes
9 FOOT DUMP BODY WITH FOLD DOWN SIDES, ELECTRIC OVER HYDRAULIC SYSTEM MOUNTED ON A DUAL REAR WHEEL CAB & CHASSIS SUPPLIED BY MDOT		
Make Offered:		**Galion**
Model Offered:		**130USDDS**

2. - Spec. No. C03-2001LG-16		
LIFT GATE, 1500 LB CAPACITY MOUNTED ON A ¾ OR 1 TON PICKUP SUPPLIED BY MDOT		
1.1	Vendor shall pick up units at MDOT's OAS Fleet Operations, 2522 W. Main St., Lansing, MI, 48917 for installation of Lift Gate	Yes
1.2	Trucks will be full of fuel before vendor picks them up and completed units shall be returned to MDOT in the same manner	Yes
1.3	Delivery of the completed trucks shall be to MDOT's Fleet Operations Facility, 2522 W. Main St., Lansing, MI, 48917 between the hours of 8:00am and 3:00pm, Monday through Friday, except public holidays. Vendor shall contact Fleet Operations at least 24 hours prior to pick up or delivery	Yes
1.4	All holes in cab and chassis frame rails shall be drilled or punched. **There shall be no flame/plasma cutting or welding on the frame side rails**	Yes
1.5	All wiring passing through holes in metal or non-metal wearing surfaces, which could cause wear of the insulation, shall be adequately protected by rubber or plastic grommets, and/or non-metallic conduit. Ends of all wires shall be adequately anchored to prevent loosening. All connections shall be soldered and enclosed in heat shrink. **Scotch locks are not acceptable.**	Yes
1.6	Lift Gate platform dimensions shall be approximately 56 inches wide x 26 inches plus a 6 inch tapered ramp	Yes
1.7	Platform shall be aluminum	Yes
1.8	Platform shall be two piece folding type	Yes
1.9	Platform lifting capacity shall be 1,500 lbs.	Yes
1.10	Platform shall be power up and power down	Yes
1.11	Power shall be 12 volt electric over hydraulic	Yes
11.2	Control switch for up and down will be installed at the lift gate	Yes
1.13	A master switch on / off switch will be provided in the truck cab.	Yes
1.14	Lift Gate Operation shall not interfere with OEM installed receiver type trailer hitch	Yes
1.15	All items removed from truck by Lift Gate installer (tail gate, rear bumper, etc.) remain the property of the State of Michigan and are to be returned with the truck	Yes
LIFT GATE, 1500 LB CAPACITY MOUNTED ON A ¾ OR 1 TON PICKUP SUPPLIED BY MDOT		
Make Offered:		**Thieman**

Model Offered:	**TT15EST 5626+6**

3. - Spec. No. C03-2001SP-16		
SNOW PLOW, 9' 2" V TYPE MOUNTED ON A ¾ OR 1 TON PICKUP SUPPLIED BY MDOT		
1.1	Vendor shall pick up units at MDOT's OAS Fleet Operations, 2522 W. Main St., Lansing, MI, 48917 for installation of Lift Gate	Yes
1.2	Trucks will be full of fuel before vendor picks them up and completed units shall be returned to MDOT in the same manner	Yes
1.3	Delivery of the completed trucks shall be to MDOT's Fleet Operations Facility, 2522 W. Main St., Lansing, MI, 48917 between the hours of 8:00am and 3:00pm, Monday through Friday, except public holidays. Vendor shall contact Fleet Operations at least 24 hours prior to pick up or delivery	Yes
1.4	All holes in cab and chassis frame rails shall be drilled or punched. **There shall be no flame/plasma cutting or welding on the frame side rails**	Yes
1.5	All wiring passing through holes in metal or non-metal wearing surfaces, which could cause wear of the insulation, shall be adequately protected by rubber or plastic grommets, and/or non-metallic conduit. Ends of all wires shall be adequately anchored to prevent loosening. All connections shall be soldered and enclosed in heat shrink. **Scotch locks are not acceptable**	Yes
1.6	Snow plow shall be 9' 2" wide in straight configuration	9' 6"
1.7	Snow plow shall be capable of operation in:	Yes
	a. Straight blade	Yes
	b. Angle to left	Yes
	c. Angle to right	Yes
	d. V plow with discharge to right & left	Yes
	e. Inverted V or scoop	Yes
1.8	Power unit shall be electric over hydraulic for Lift, Angle, V and Inverted V.	
1.9	Controls shall be hand held type with wiring cable, in cab to control all functions.	Yes
1.10	Moldboard shall be steel with option for Poly	Yes
1.11	Blade shoes shall be provided	Yes
1.12	Snow deflector shall be installed on top of moldboard	Yes
1.13	Mounting kit shall be provided for make & model of truck that the snowplow is mounted on	Yes
1.14	Head light kit with relay shall be provided for make & model of truck that the snowplow is mounted.	Yes
1.15	All components shall be installed by vendor and will be fully operational when delivered.	Yes
SNOW PLOW, 9' 2" V TYPE MOUNTED ON A ¾ OR 1 TON PICKUP SUPPLIED BY MDOT		
Make Offered:		**Western**
Model Offered:		**IUTMPVPP95**

5. - Spec. No. C03-2001CD-16		
9 FOOT DUMP BODY WITH FOLD DOWN SIDES, ELECTRIC OVER HYDRAULIC SYSTEM,TOOL BOX & FUEL TANK MOUNTED ON A DUAL REAR WHEEL CAB & CHASSIS SUPPLIED BY MDOT		
Dump Body		
1.1	Winning bidder shall be notified when units are available for dump body with hydraulic hoist installation. 90 day required delivery date shall start on this date	Yes
1.2	Winning bidder shall pick up units at MDOT's OAS Fleet Operations, 2522 W. Main St., Lansing, MI, 48917 for installation of dump body with hydraulic hoist	Yes
1.3	Cab & chassis will be full of fuel before winning vendor picks them up and completed units shall be returned to MDOT in the same manner	Yes
1.4	Delivery of the completed trucks shall be to MDOT's Fleet Operations Facility, 2522 W. Main St., Lansing, MI, 48917 between the hours of 8:00am and 3:00pm, Monday through Friday, except public holidays. Bidder shall contact Fleet Operations at least 24 hours prior to pick up or delivery	Yes
1.5	All holes in cab and chassis frame rails shall be drilled or punched. **There shall be no flame/plasma cutting or welding on the frame side rails**	Yes
1.6	Dump body shall have all bare metal surfaces pre-cleaned and prepped prior to applying a compatible two part epoxy primer	Yes
1.7	When painting continues over a manufacturer's standard paint, metal prepping and primer may be omitted, providing an acceptable bond can be achieved	Yes
1.8	Dump body shall be painted matching Cab & chassis Paint code	Yes
1.9	Dump body hoist and sub-frame shall be painted black	Yes

1.10	Cab to end frame length on all body installations shall be the same length as the body being mounted, plus the length of any setback, frame extensions are not acceptable	Yes
1.11	All wiring passing through holes in metal or non-metal wearing surfaces, which could cause wear of the insulation, shall be adequately protected by rubber or plastic grommets, and/or non-metallic conduit. Ends of all wires shall be adequately anchored to prevent loosening. All connections shall be soldered and enclosed in heat shrink. Scotch locks are **not** acceptable	Yes
1.12	Factory paint codes shall be provided and aftermarket brand and paint codes shall be provided	Yes
1.13	Mud flaps shall be anti-sail type, plain rubber, ¼ inch thick, with **NO** advertising on either side, provided and installed by vendor	Yes
1.14	Per Schedule E - Trailer Wiring Diagram, trailer connector shall be 7-way round pin Berg type , mounted at rear of frame, wired for turn signals independent of stop, compatible with trailers that have amber or side turn lamps, provided and installed by vendor	Yes
1.15	Dump body and hoist shall be mounted approximately 30 inchs behind the truck cab	Yes
1.16	All horizontal surfaces of dump body shall be dirt shedding	Yes
1.17	Dump body dimensions shall be approximately 8 feet long inside and 87 inches wide outside	Yes
1.18	Understructure shall be western-style crossmemberless	Yes
1.19	Longsills shall be fabricated trapezoidal design, of 10 gauge steel	Yes
1.20	Longsills shall be 7 inch height maximum	Yes
1.21	Longsill interior shall be coated with SG-50A corrosion preventative compound	Yes
1.22	Dump body floor shall be 7 gauge steel minimum	Yes
1.23	Sides and tailgate shall be 12 gauge steel minimum	Yes
1.24	Rear corner pillars shall have FMVSS #108 clearance lights mounted in rubber grommets	Yes
1.25	Rear apron shall have three (3) FMVSS #108 lights mounted in rubber grommets connected with one-piece wiring harness	Yes
1.26	Sides shall fold down with single lever control, be 14 inch height minimum and have greaseable hinges welded to underside of body	Yes
1.27	Fold down sides shall be limited in their travel by a channel iron welded to the underside of body and rubber bumper so they don't rub on rear tires	Yes
1.28	Sides shall be reinforced with braces and provide pockets for side boards	Yes
1.29	Sides shall be of internal tapered design to keep material from collecting and hampering side operation	Yes
1.30	Lock pin holes for sides shall be punched or drilled, flame or plasma cutting of holes is NOT acceptable	Yes
1.31	Tailgate shall be double acting, single lever control, reinforced with braces, 1-¼ inch pins top and bottom, and 20 inch height minimum	Yes
1.32	Top and bottom of tailgate shall be formed box design for added strength	Yes
1.33	Tailgate top hinge plate shall be heavy duty, 1 inch minimum bearing surface for the hinge pins	Yes
1.34	Tailgate hinge pins shall be 1-¼ inch C1045 cold rolled steel, lubricated by grease zerk	Yes
1.35	Latch fingers shall be 1 inch thick	Yes
1.36	Tailgate lower release mechanism shall be lubricated by grease zerk	Yes
1.37	Head sheet shall be reinforced with braces	Yes
1.38	Head sheet and cab protector shall be one piece, integral, 10 gauge steel minimum with pressed in "V" brace for added strength and have full screened bulkhead, height ofcab protector shall be determined at post award meeting	Yes
1.39	Hoist shall be Crysteel LB510 or approved alternate	Galion CS615T-09
1.40	Hoist shall be:	
	a. NTEA Class "C" or Class 30 scissors under body type	Yes
	b. Double acting, 12 volt electric over hydraulic power unit with momentary switch to be mounted in dash	Yes
	c. 5-½ inch cylinder bore	Yes
	d. 15-¼ cylinder stroke	Yes
	e. 2 inch diameter chromed cylinder shaft	Yes
	f. Cylinder port size shall be 9/16-18 ORB	Yes
	g. 3250psi operating pressure	Yes

	h. 9-¾ inch above frame mounting height	13"
	i. Sub frame to be full length, 3-¾ inch tall, fabricated “C” channel frame rails, 10 gauge steel	Yes
	j. Rear hinge shall be 3-½ inch x 2-½ inch x ¼ inch x 36-½ inch structural angle	Yes
	k. 1-5/16 inch x 4-3/8 inch greaseable hinge pins	Yes
1.41	Dump angle shall be 45°	50 degree exceed
1.42	Hoist controls shall be push button mounted on dash, floor mount controls are NOT acceptable	Yes
1.43	Controls shall be automatic return to center type	Yes
1.44	Dump body shall stop movement either up or down when controls are released	Yes
1.45	Hydraulics shall be electric over hydraulic with pump, reservoir, and valve	Yes
1.46	A “body raised” light shall be mounted in the dash to illuminate when body is not in the down position	Yes
1.47	Back up alarm shall be electric, moisture resistant, approximately 95dba	Yes
1.48	Rear bumper shall be I.C.C. type with hitch plate having 16 inch ground clearance	Yes
1.49	Hitch plate shall be ¾ inch x 34 inch x 24 inch, bolted and welded to the chassis frame, drilled for multiple pintle hitch positions and include a receiver tube mounted at 17 inches at the bottom	Yes
1.50	D-rings for safety chains with a capacity for 10 ton trailer shall be installed on the hitch plate (location to be determined at pre-construction meeting)	Yes
1.51	Lights shall be LED type and include:	Yes
	a. Clearance lights	Yes
	b. Rear stop	Yes
	c. Rear turn	Yes
	d. Rear tail	Yes
	e. Backup	Yes
1.52	All lights shall conform to all laws of the State of Michigan	Yes
1.53	All items removed from cab and chassis by body installer (frame ends, fuel tanks, etc…) remain the property of the State of Michigan and are to be returned with the truck	Yes
1.54	“Body raised” light shall be activated by an epoxy sealed, magnetic proximity switch, Grainger part # 6C834 or Omron type TL-W20ME2 12V - 24V **No Exceptions**	Yes
1.55	OEM tail lights shall be remounted in the hitch plate	Yes
1.56	LED stop, tail, and turn lights shall be mounted in the corner posts of dump body	Yes
1.57	Rear corner posts shall have oval light cutouts, rear facing, one to each post for stop, tail and turn light. Lights to be furnished shall be Sound off ECV062STT or equivalent. Rear stop, tail and turn lights to be inside the outline of the corner post. Mounting boxes that extend past corner post are not acceptable	Yes
1.58	LED flasher lights in rear post pillars, wired to flash in synchronization	Yes
1.59	Go-light with wireless control on the roof of the cab	Yes
1.60	Body prop shall support empty body weight	Yes
1.61	Vendor shall supply and install one Roll Rite window shade style tarp system Model number 62655-88 or approved alternate for each body	Yes
1.62	Tarp system shall be window shade type	Yes
1.63	Tarp system shall have aluminum wind guard	Yes
1.64	Tarp shall be mesh type 84” X 12’	Yes
1.65	Tarp shall be mounted to the head sheet of the dump body, exact location to be determined at preconstruction meeting	Yes
Tool Box		
2.1	Tool box is 24" wide x 26" height x 60" length	Yes
2.2	Tool box and door construction is 14 GA Steel	Yes
2.3	Includes single swing door on streetside/road side	Yes
2.4	Anchor latch with cylinder	Yes
2.5	SS Door hinge	Yes
2.6	Gas door spring prop	Yes
2.7	48" Centered shelf	Yes
2.8	Bolt on end panal	Yes
2.9	304 Unpainted stainless steel	Yes
Fuel Tank		
3.1	26" tall x 24" wide x20" deep transpt tan	Yes
3.2	Tank capacity is 51 GAL	Yes
3.3	Tank is constructed of 10 GA Steel	Yes
3.4	Tank includes a fill cap, a 3" female pipe fitting, and a vent on the top of the tank	Yes

3.5	Tank includes a drain plug on the bottom of the tank	Yes
3.6	Tank is 26" tall	Yes
3.7	Tank is 24" wide	Yes
3.8	Tank is 20" Deep	Yes
9 FOOT DUMP BODY WITH FOLD DOWN SIDES, ELECTRIC OVER HYDRAULIC SYSTEM,TOOL BOX & FUEL TANK MOUNTED ON A DUAL REAR WHEEL CAB & CHASSIS SUPPLIED BY MDOT		
Make Offered:		**Galion**
Model Offered:		**130USDDS**

6. - Spec. No. C03-20CU11-16		
11 FOOT COVERED UTILITY BODY AND 78 INCH CANOPY ROOF TO BE INSTALLED ON MDOT CHASSIS		
	UTILITY BODY	
1.1	Utility body approximate dimensions shall be:	
	a. 133 inches long	Yes
	b. 93.5 inch body width	Yes
	c. 53.5 inch floor width	Yes
	d. 26 inches floor to top of compartment	24"
	e. 20 inch compartment depth	Yes
	f. 42.5 inch compartment height	40"
	g. 78 inch clear interior height	Yes
	h. 86-½ inch canopy roof width	94"
	i. 15 inch, full length, two (2) per side interior shelves	Yes
	j. 53 inch clear interior width	Yes
	k. 12 inch x 30inch front window aligned with cab window with window guard	9" X 30"
	l. 50 inch rear door opening width, full height	Yes
	m. 14 inch x 16 inch safety glass window in each rear door with window guards	Yes
1.2	Two (2) rear doors shall swing out to sides and be watertight	Yes
1.3	Automotive quality bubble type door seal shall be furnished on all compartment doors	Yes
1.4	Understructure shall be 5 inch, 6.7 pound structural steel channel cross-members	Yes
1.5	Tie channels shall be 3 inch 4.1 pound structural steel channel	Yes
1.6	Floor shall be 3/16 inch tread plate	Yes
1.7	Front boxes shall be 14 gauge A/60 galvanneal steel	A/40 exceeds
1.8	Front and intermediate partition shall be A/60 galvanneal steel	A/40 exceeds
1.9	Rear partition shall be 12 gauge A/60 galvanneal steel	accept
1.10	Wheel house panels shall be 14 gauge A/60 galvanneal steel	A/40 exceeds
1.11	Compartment sides shall be 14 gauge A/60 galvanneal steel	A/40 exceeds
1.12	Front bulkhead shall be 14 gauge A/60 galvanneal steel	A/40 exceeds
1.13	All shelving and dividers shall be 18 gauge steel minimum	Yes
1.14	Doors shall be double panel construction, 20 gauge A/60 galvanneal steel	Yes
1.15	Hinges shall be 5/16 inch diameter, electro zinc steel rod type with stainless steel end bearings	Yes
1.16	Door and compartment locks shall be flush mounted	Yes
1.17	All locks shall be keyed alike	Yes
1.18	All vertical doors shall be equipped with spring loaded door holder	Yes
1.19	Master locking system shall be provided on all compartments with handles at rear	Yes
1.20	All compartments shall have strip lighting with a master switch and pilot light in the cab, fused separately. Master switch shall also control roof mounted dome lights	Yes
1.21	Interior shall have two roof mounted dome lights	Yes
1.22	Street side compartments shall be:	Yes
	a. Front vertical – 32” wide x 42.5” high x 20 “ Deep with 6 drawer combo cabinet, all drawers have one way dividers and 300 lb. slides with one hand operation	34.25" X 40" X 20"
	b. Second vertical – 22” wide x 42.5 “ high x 20 “ Deep with 2 shelves with adjustable dividers	21" X 40" X 20"
	c. Horizontal – 54” wide x 21”high x 20 “ deep with one shelve with adjustable dividers, rubber mat installed on door	52.75" X 18.5" X 20"
	d. Rear vertical – 24” wide x 42.5” high x 20” deep with 2 shelves with adjustable dividers	25.25" X 40" X 20"
1.23	Curb side compartments shall be:	
	a. Front vertical – 32” wide x 42.5” high x 20 “ With 2 shelves with adjustable dividers	34.25" X 40" X 20"

	b. Second vertical – 22” wide x 42.5 “ high x 20 “ Deep with 2 shelves with adjustable dividers	21" X 40" X 20"
	c. Horizontal – 54” wide x 21”high x 20” deep with one shelve with adjustable dividers, rubber mat installed on door	52.75" X 18.5" X 20"
	d. Rear vertical – 24” wide x 42.5” high x 20” deep with 2 shelves with adjustable dividers	25.25" X 40" X 20"
1.24	All wiring passing through holes in metal or non-metal wearing surfaces, which could cause wear of the insulation, shall be adequately protected by rubber or plastic grommets, and/or non-metallic conduit. Ends of all wires shall be adequately anchored to prevent loosening. All connections shall be soldered and enclosed in heat shrink. **Scotch locks are not acceptable**	Yes
1.25	All exterior lights on body shall be LED type, conform with Motor Vehicle laws of the State of Michigan and include:	Yes
	a. Clearance	Yes
	b. Stop	Yes
	c. Tail	Yes
	d. Turn	Yes
	e. Back-up	Yes
	f. LED flasher lights in rear body on both sides, above doors height, wired to flash in synchronization	Yes
1.26	Rear bumper shall be step type with recess in center for Trailer hitch	Yes
1.27	2” ID x 12” long receiver tube type trailer hitch	Yes
1.28	Per Schedule E - Trailer Wiring Diagram, trailer connector shall be 7-way round pin Berg type , mounted at rear of frame, wired for turn signals independent of stop, compatible with trailers that have amber or side turn lamps, provided and installed by vendor	Yes
1.29	Two ¾” D-rings installed for trailer safety chains	Yes
1.30	Eyelet for trailer breakaway cable	Yes
1.31	Two plain black rubber mud flaps	Yes
1.32	Back Up alarm	Yes
1.33	An aerodynamic air bubble shall be furnished to be installed on the front panel above truck cab	Yes
1.34	Paint utility body match truck cab	Yes
1.35	Vendor shall pickup cab & chassis at MDOT Fleet Administration, 2522 West Main St. Lansing,Mi. 48917 and return to same address when installation is completed. Vendor shall provide 24 hour notice before pick up or delivery. Pick up or delivery shall only be made between 8 am and 3 pm, Monday thru Friday except on state of Michigan holidays.	Yes
11 FOOT COVERED UTILITY BODY AND 78 INCH CANOPY ROOF TO BE INSTALLED ON MDOT CHASSIS		
Model Offered:		**Knapheide**
Make Offered:		**KC132H2094J**

7. - Spec. No. C03-3001CAP-16		
PICKUP CAP FOR 6.5 OR 8 FT BOX, FIBERGLASS, MOUNTED ON A PICKUP SUPPLIED BY MDOT		
1.1	Vendor shall pick up units at MDOT’s OAS Fleet Operations, 2522 W. Main St., Lansing, MI, 48917 for installation of Lift Gate	Yes
1.2	Trucks will be full of fuel before vendor picks them up and completed units shall be returned to MDOT in the same manner	Yes
1.3	Delivery of the completed trucks shall be to MDOT’s Fleet Operations Facility, 2522 W. Main St., Lansing, MI, 48917 between the hours of 8:00am and 3:00pm, Monday through Friday, except public holidays. Vendor shall contact Fleet Operations at least 24 hours prior to pick up or delivery	Yes
1.4	All wiring passing through holes in metal or non-metal wearing surfaces, which could cause wear of the insulation, shall be adequately protected by rubber or plastic grommets, and/or non-metallic conduit. Ends of all wires shall be adequately anchored to prevent loosening. All connections shall be soldered and enclosed in heat shrink. **Scotch locks are not acceptable**	Yes
1.5	Caps shall be available for GM, Dodge and Ford pickups with 6.5 ft., 8 ft. and other box sizes that may be available.	Yes
1.6	Caps shall be fiberglass with molded and rolled fiberglass Base rails.	Yes
1.7	Caps roof shall be Tri-Cel honey comb reinforced	Yes
1.8	Cap height shall be the same as the pickup cab height	Yes
1.9	Cap shall have full width rear widow, hinged at top	Yes

1.10	Cap shall have left and right side windows hinged at top	Yes
1.11	Cap shall have locks on all windows, keyed the same	Yes
1.12	Cap shall have full width front window that is removable for cleaning	Yes
1.13	Cap shall have LED upper third brake to operate only with truck brake lights.	Yes
1.14	Cap shall have LED interior dome light	Yes
1.15	LED flasher lights in rear cap pillars, wired to flash in synchronization	Yes
1.16	Cap shall color matched to the pickup it is installed on	Yes
1.17	All required mounting kits, wiring harness and hardware shall be provided.	Yes
1.18	All components shall be installed by vendor and will be fully operational when delivered.	Yes
PICKUP CAP FOR 6.5 OR 8 FT BOX, FIBERGLASS, MOUNTED ON A PICKUP SUPPLIED BY MDOT		
Make Offered:		**A.R.E.**
Model Offered:		**"V" Series**

21. - Spec. No. C60-2001-16		
Combination Spreader with High Speed Anti Icing		
1.1	It is the intent of this specification to provide a slide in type hopper box material spreader to uniformly spread salt, sand or a combination of both for treatment of icy roads. The spreader shall have the capacity for liquid per-wetting nd high speed ant icing. The operation of the spreader will be controlled by a ground speed oriented hydraulic system. MDOT will install this spreader in a 64,000 GVW tandem axle truck with 14 foot dump box and a closed center load sensing hydraulic system.	
1.2	Make: E-Poke or approved alternate	Henderson
1.3	Model: 4902 or approved alternate	First Response
1.4	6.5 Cubic yard capacity	7.5 Cubic yard capacity
1.5	951 gallon liquid capacity	1300 gallon capacity
1.6	Stainless steel agitator with replaceable spring fingers	304 stainless steel dual auger trough
1.7	Soft rubber base	stainless steel base
1.8	Spring base and spring base adjustment	not required
1.9	Conveyor belt	dual auger no belt required.
1.10	Transmission and variable pre-wetting pump, 5% to 30%	high volume pump 210 GPM
1.11	External neutral gear	not required
1.12	Grate 4” X 4”	Yes
1.13	Inspection ladder	Yes
1.14	Guides, lateral with rails	Yes
1.15	Hydraulic fittings	Yes
1.16	Stainless steel delivery roller with 8 mm steel cams	all stainless steel
1.17	Multi-plug through cab kit with wiring and sealed quick couplers	Yes
1.18	Distribution box with electronic speed adapter/pulse divider	Yes
1.19	Auto stop of liquid refilling	Yes
1.20	Shut off valve	Yes
1.21	Delivery spout	Yes
1.22	Epo-Master III controller with external card reader and RS 232	Certified Power XDS
1.23	Long spreader chute	Yes
1.24	High speed anti-icing spray bar	Yes
1.25	D ring tie down kit	Yes
1.26	Lighting package consisting of two strobe lights and one rear work light	Yes
1.27	Electric symmetry spreader control	Yes
1.28	Level indicators for dry material and liquid	Yes
1.29	Leg system	Yes
1.30	Folding cover	Yes
1.31	Spinner guard	Yes
1.32	Mounting and installation on MDOT supplied truck	Yes
Combination Spreader with High Speed Anti Icing		
Make Offered:		**Henderson**
Model Offered:		**First Response**

CONTRACT # 071B7700087 - AWARDED SPECIFICATIONS FOR PURCHASE

Spec #	EQUIPMENT MAKE & MODEL:	EQUIPMENT CATEGORY	Quoted Price	Hourly rate for training (per Schedule A, Statement of Work section	Hourly rate for quoted custom work	DELIVERY Per mile from Contractor's nearest dealer location
2	C03-2001LG-16 Lift Gate - Thieman TT15EST 5626+6	lift gate	$ 3,490.00	$ 55.55	$ 85.00	$ 0.88
3	C03-2001SP-16 Snow Plow - Western MVPPIUTP95	snow plow	$ 6,225.00	$ 55.55	$ 85.00	$ 0.88
6	C03-20CU11-16 utility body - Knapeide KC132H2094J	utility body	$ 16,965.00	$ 55.55	$ 85.00	$ 0.88
21	C60-2001-16 Combination Spreader with High Speed Anti Icing - Henderson First Response		$ 75,500.00	$ 55.55	$ 85.00	$ 2.55
	NON - AWARDED SPECIFICATIONS FOR PURCHASE					
1	CD03-2001CD-16 dump body - Galion 130USDDS	dump body	$ 12,477.00	$ 55.55	$ 85.00	$ 0.88
5	C03-2011cd-16 TB FT dump body - Knapeide KC132H2094J	dump body	$ 16,581.00	$ 55.55	$ 85.00	$ 0.88
7	C03-3001CAP-16 cap - A.R.E. Series V	Cap pickup	$ 1,888.00	$ 55.55	$ 85.00	$ 0.88

Catalog Pricing For PURCHASE (add lines below as needed)

Item #	EQUIPMENT MAKE & MODEL:	EQUIPMENT CATEGORY	% Discount Off MSRP (Delivery is Included)	Installation
1	Henderson Knapheide catalog of products MSRP pricing - www.hendersonproducts.com - (See Schedule C2 - Pricing Attachments)	Full line of Snow and Ice control equipment	see work book	Included in pricing. Call Jim Fountain 810-620-0755 for workbook assistance.
2	Knapheide Products see www.knapheide.com call Jim Fountain 810-620-0755 for pricing	Utility bodies, dump bodies, platform bodies, truck caps, crane bodies, cut away van bodies, mechanics truks, etc.	municipal pricing 5% below retail	call Jim Fountain 810-620-0755 for pricing
3	Truck-Lite MSRP pricing - www.truck-lite.com - (See Schedule C2 - Pricing Attachments)	Lighting	10%	call Jim Fountain 810-620-0755 for pricing
4	RC Industries MSRP pricing - www.rcindustries.com - (See Schedule C2 - Pricing Attachments)	tool boxes	10%	call Jim Fountain 810-620-0755 for pricing
5	Back Rack MSRP pricing - www.backrack.com - (See Schedule C2 - Pricing Attachments)	cab protectors	10%	call Jim Fountain 810-620-0755 for pricing
6	Western Products MSRP pricing - www.western.com - (See Schedule C2 - Pricing Attachments)	snow plows and spreaders	10%	call Jim Fountain 810-620-0755 for pricing
7	SnowEx MSRP pricing - www.SnowEx.com - (See Schedule C2 - Pricing Attachments)	snow plows and spreaders	10%	call Jim Fountain 810-620-0755 for pricing
8	Weather Guard MSRP pricing - www.weatherguard.com - (See Schedule C2 - Pricing Attachments)	tool boxes	10%	call Jim Fountain 810-620-0755 for pricing
9	Weather Guard MSRP pricing - www.weatherguard.com - (See Schedule C2 - Pricing Attachments)	Van interior packages	10%	call Jim Fountain 810-620-0755 for pricing
10	Tommy Gate Parts MSRP parts pricing - www.tommygate.com - (See Schedule C2 - Pricing Attachments)	Lift Gate parts	8%	call Jim Fountain 810-620-0755 for pricing
11	Luverne Truck Equipment MSRP pricing - www.luvernetruck.com - (See Schedule C2 - Pricing Attachments)	Truck equipment items	10%	call Jim Fountain 810-620-0755 for pricing
12	Whelen MSRP pricing - www.whelen.com - (See Schedule C2 - Pricing Attachments)	Lighting	10%	call Jim Fountain 810-620-0755 for pricing
13	Auto Crane MSRP pricing - www.autocrane.com - (See Schedule C2 - Pricing Attachments)	truck cranes	8%	call Jim Fountain 810-620-0755 for pricing
14	Stellar Industries TC series MSRP pricing - www.stellarindustries.com - (See Schedule C2 - Pricing Attachments)	telescopic cranes	8%	call Jim Fountain 810-620-0755 for pricing
15	Stellar Light Duty MSRP pricing - www.stellarindustries.com - (See Schedule C2 - Pricing Attachments)	Light duty cranes	8%	call Jim Fountain 810-620-0755 for pricing
16	Stellar Heavy Duty MSRP pricing - www.stellarindustries.com - (See Schedule C2 - Pricing Attachments)	Heavy duty cranes	8%	call Jim Fountain 810-620-0755 for pricing
17	Stellar Hooklifts MSRP pricing - www.stellarindustries.com - (See Schedule C2 - Pricing Attachments)	Hooklift systems	8%	call Jim Fountain 810-620-0755 for pricing

18	Stellar EC series cranes MSRP pricing - www.stellarindustries.com - (See Schedule C2 - Pricing Attachments)	EC series cranes	8%	call Jim Fountain 810-620-0755 for pricing
19	Maxxima LED lighting MSRP pricing - www.maxxima.com - (See Schedule C2 - Pricing Attachments)	LED Lighting	10%	call Jim Fountain 810-620-0755 for pricing
20	Star Lighting MSRP pricing - www.starlightingproducts.com - (See Schedule C2 - Pricing Attachments)	Lighting	10%	call Jim Fountain 810-620-0755 for pricing
21	Venco Crane MSRP pricing - www.venturo.com - (See Schedule C2 - Pricing Attachments)	Cranes	8%	call Jim Fountain 810-620-0755 for pricing
22	Venco Hoist MSRP pricing - www.venturo.com - (See Schedule C2 - Pricing Attachments)	Hoists	8%	call Jim Fountain 810-620-0755 for pricing
23	Tommy Gate MSRP Liftgate pricing - www.tommygate.com - (See Schedule C2 - Pricing Attachments)	Lift Gates	8%	call Jim Fountain 810-620-0755 for pricing
24	Henderson Bench Press Hoists MSRP pricing - www.hendersonproducts.com - (See Schedule C2 - Pricing Attachments)	Hoists	3%	call Jim Fountain 810-620-0755 for pricing
25	Henderson Magnum dump body MSRP pricing - www.hendersonproducts.com - (See Schedule C2 - Pricing Attachments)	Heavy duty dump body	3%	call Jim Fountain 810-620-0755 for pricing
26	Henderson MKE 14ft. Dump body MSRP pricing - www.hendersonporducts.com - (See Schedule C2 - Pricing Attachments)	Tandem dump body	3%	call Jim Fountain 810-620-0755 for pricing
27	Henderson MKE 10ft. Dump body MSRP pricing - www.hendersonproducts.com - (See Schedule C2 - Pricing Attachments)	Single axle dump body	3%	call Jim Fountain 810-620-0755 for pricing
28	Henderson MKIII 3 yard dump body MSRP pricing - www.hendersonproducts.com - (See Schedule C2 - Pricing Attachments)	3 yard dump body	3%	call Jim Fountain 810-620-0755 for pricing
29	Henderson MKIII 5 yard dump body MSRP pricing - www.hendersonproducts.com - (See Schedule C2 - Pricing Attachments)	5 yard dump body	3%	call Jim Fountain 810-620-0755 for pricing
30	Henderson 11ft. Muni Body singel axle MSRP pricing - www.hendersonproducts.com - (See Schedule C2 - Pricing Attachments)	Muni Body single axle	3%	call Jim Fountain 810-620-0755 for pricing
31	Henderson 14ft. Muni Body tandem axle MSRP pricing - www.hendersonproducts.com - (See Schedule C2 - Pricing Attachments)	Muni Body tandem axle	3%	call Jim Fountain 810-620-0755 for pricing
32	Henderson PWS 800 gallon MSRP pricing - www.hendersonproducts.com - (See Schedule C2 - Pricing Attachments)	Pre Wet system	3%	call Jim Fountain 810-620-0755 for pricing
33	Henderson PWS 400 gallon MSRP pricing - www.hendersonproducts.com - (See Schedule C2 - Pricing Attachments)	Pre Wet system	3%	call Jim Fountain 810-620-0755 for pricing
34	Henderson FSH II 13ft. Vbox Spreader MSRP pricing - www.hendersonproducts.com - (See Schedule C2 - Pricing Attachments)	Vbox Spreader	3%	call Jim Fountain 810-620-0755 for pricing
35	Henderson FSH II 10ft. Vbox Spreader MSRP pricing - www.hendersonproducts.com - (See Schedule C2 - Pricing Attachments)	Vbox Spreader	3%	call Jim Fountain 810-620-0755 for pricing
36	Henderson TGS tailgate spreader MSRP pricing - www.hendersonproducts.com - (See Schedule C2 - Pricing Attachments)	Tailgate spreader	3%	call Jim Fountain 810-620-0755 for pricing
37	Henderson RTS replacement tailgate spreader MSRp pricing - www.hendersonproducts.com - (See Schedule C2 - Pricing Attachments)	Replacement Tailgate spreader	3%	call Jim Fountain 810-620-0755 for pricing
38	Henderson LAS 1800 gallon MSRP pricing - www.hendersonproducts.com - (See Schedule C2 - Pricing Attachments)	Liquid Application System	3%	call Jim Fountain 810-620-0755 for pricing
39	Henderson LAS 1650 gallon MSRP pricing - www.hendersonproducts.com - (See Schedule C2 - Pricing Attachments)	Liquid Application System	3%	call Jim Fountain 810-620-0755 for pricing
40	Henderson LAS 1235 gallon MSRP pricing - www.hendersonproducts.com - (See Schedule C2 - Pricing Attachments)	Liquid Application System	3%	call Jim Fountain 810-620-0755 for pricing
41	Henderson LAS 925 gallon MSRP pricing - www.hendersonproducts.com - (See Schedule C2 - Pricing Attachments)	Liquid Application System	3%	call Jim Fountain 810-620-0755 for pricing
42	Henderson One Way Plow 12L MSRP pricing - www.hendersonproducts.com - (See Schedule C2 - Pricing Attachments)	One Way Plow	3%	call Jim Fountain 810-620-0755 for pricing
43	Henderson One Way Plow 12S MSRP pricing - www.hendersonproducts.com - (See Schedule C2 - Pricing Attachments)	One Way Plow	3%	call Jim Fountain 810-620-0755 for pricing

44	Henderson RSP 10ft. reversible plow MSRP pricing - www.hendersonproducts.com - (See Schedule C2 - Pricing Attachments)	Reversible Plow	3%	call Jim Fountain 810-620-0755 for pricing
45	Henderson RSP 11ft. Reversible plow MSRP pricing - www.hendersonproducts.com - (See Schedule C2 - Pricing Attachments)	Reversible Plow	3%	call Jim Fountain 810-620-0755 for pricing
46	Henderson Wing MSRP pricing - www.hendersonproducts.com - (See Schedule C2 - Pricing Attachments)	Wing	3%	call Jim Fountain 810-620-0755 for pricing
47	Henderson UBS 10ft. Underbody scraper MSRP pricing - www.hendersonproducts.com - (See Schedule C2 - Pricing Attachments)	Unerbody Scraper	3%	call Jim Fountain 810-620-0755 for pricing
48	Henderson UBS 12ft. Underbody scraper MSRP pricing - www.hendersonproducts.com - (See Schedule C2 - Pricing Attachments)	Unerbody Scraper	3%	call Jim Fountain 810-620-0755 for pricing
49	Henderson Black Maxx 14ft. Tandem MSRP pricing - www.hendersonproducts.com - (See Schedule C2 - Pricing Attachments)	Black Maxx 14ft. Tandem body	3%	call Jim Fountain 810-620-0755 for pricing
50	Henderson Black Maxx 13ft. Tandem MSRP pricing - www.hendersonproducts.com - (See Schedule C2 - Pricing Attachments)	Black Maxx 13ft. Tandem body	3%	call Jim Fountain 810-620-0755 for pricing
51	Henderson Brine Extreme Pro MSRP pricing - www.hendersonproducts.com - (See Schedule C2 - Pricing Attachments)	Brine Maker	3%	call Jim Fountain 810-620-0755 for pricing
52	Henderson Brine Extreme trailer MSRP pricing - www.hendersonproducts.com - (See Schedule C2 - Pricing Attachments)	Mobile Brine Maker	3%	call Jim Fountain 810-620-0755 for pricing
53	Henderson Brine Extreme Ultimate MSRP pricing - www.hendersonproducts.com - (See Schedule C2 - Pricing Attachments)	Brine Maker Ultimate	3%	call Jim Fountain 810-620-0755 for pricing
54	Henderson Brine Extreme Truck Fill MSRP pricing - www.hendersonproducts.com - (See Schedule C2 - Pricing Attachments)	Brine Truck Fill system	3%	call Jim Fountain 810-620-0755 for pricing
55	Henderson Bench Press Hoist MSRP pricing - www.hendersonproducts.com - (See Schedule C2 - Pricing Attachments)	Bench Press Hoist	3%	call Jim Fountain 810-620-0755 for pricing
56	Buyers Products MSRP Pricing - www.buyersproducts.com - (See Schedule C2 - Pricing Attachments)	Full line of truck equipment and accessories.	3%	call Jim Fountain 810-620-0755 for pricing
57	Buyers Products MSRP Snow and Ice Maintenance Pricing - www.buyersproducts.com - (See Schedule C2 - Pricing Attachments)	Snow and Ice Maintenance Products	3%	call Jim Fountain 810-620-0755 for pricing

2016 Auto Crane Price List

December 2016 Edition

Prices: All prices in U.S. dollars. All prices are EX-WORKS - Tulsa, OK. Prices and specifications are subject to change without notice. All list prices are "not installed" unless noted otherwise.

Installation: Factory installed prices are based upon Auto Crane "standard" placement of certain options. Special configurations are available and will be quoted at additional cost.

Cancellation: Orders cancelled within 60 days prior to the scheduled ship date will be subject to a 25 percent restocking charge. Cancellation of orders for other than standard units will be subject to cancellation charges if received less than 90 days prior to scheduled ship date. There will be a 100 percent cancellation charge for any items such as paint or other non-standard products which have been ordered or produced by Auto Crane to satisfy a customer order.

Auto Crane Company
PO Box 581510
Tulsa, OK 74158
Phone: (918) 438-2760
Fax: (918) 234-2102
www.autocrane.com

Table of Contents

Cranes……....2-20

Cranes Parts & Accessories……..…..21-22

Bodies……23-92

Truck Class Body Limitations……..……93

Saddles……....…94-96

Compressors & All-In-Ones……97-100

Lube Skids……...101-102

Warranty……...……...103-104

Econo-Ton Cranes – 5’ Boom

- 2,000 lb. lift (max)
- 6,500 ft-lb capacity
- 3' 3" to 5' 2" manual telescopic boom
- 325 degree manual rotation with manual brake (Econo-Ton II)
- 355 degree electric power rotation (Econo-Ton IIR)
- 10 ft. Remote Control Pendant
- 25 ft. of 1/4" 4,200 lbs. breaking strength cable
- 20 ft. high current battery cable

Econo-Ton II/R, 5' Boom

Short Pedestal

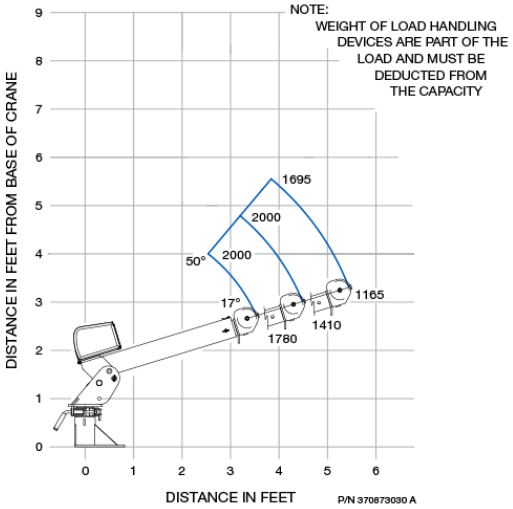

Standard Pedestal, 3'

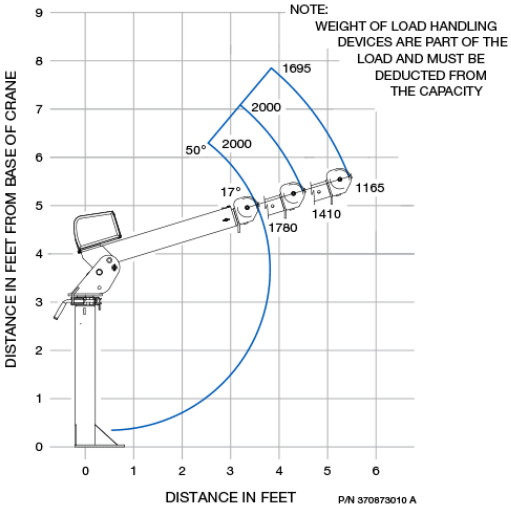

Model	Part Number	Description	List Price
Econo-Ton II	**370870010**	5’ Boom, manual rotation, standard pedestal	$2,697
Econo-Ton II	**370870030**	5’ Boom, manual rotation, short pedestal	$2,734
Econo-Ton IIR	**370871010**	5’ Boom, power rotation, standard pedestal	$5,364
Econo-Ton IIR	**370871030**	5’ Boom, power rotation, short pedestal	$5,571

*Truck must be equipped with jackleg extending minimum 3' 9" (1.14 m.) from centerline of truck

*5,200 GVWR minimum chassis requirement. (Does not include bodies and accessories)

Econo-Ton Cranes – 7’ Boom

- 2,000 lb. lift (max)
- 6,500 ft-lb capacity
- 4' 2" to 7' 1" manual telescopic boom
- 325 degree manual rotation with manual brake (Econo-Ton II)
- 355 degree electric power rotation (Econo-Ton IIR)
- 10 ft. Remote Control Pendant
- 25 ft. of 1/4" 4,200 lbs. breaking strength cable
- 20 ft. high current battery cable

Econo-Ton II/R, 7' Boom

Short Pedestal

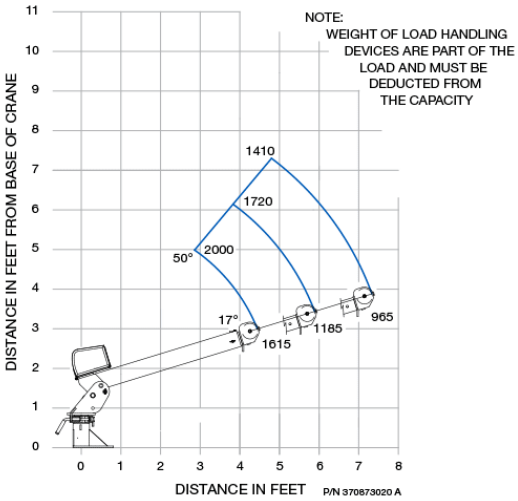

Standard Pedestal, 4'

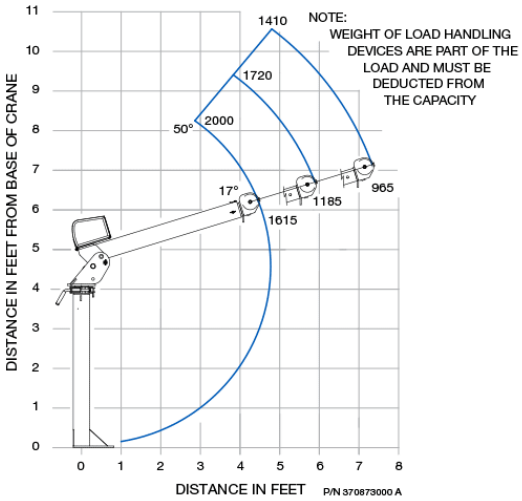

Model	Part Number	Description	List Price
Econo-Ton II	**370870000**	7’ Boom, manual rotation, standard pedestal	$2,804
Econo-Ton II	**370870020**	7’ Boom, manual rotation, short pedestal	$2,804
Econo-Ton IIR	**370871000**	7’ Boom, power rotation, standard pedestal	$5,531
Econo-Ton IIR	**370871020**	7’ Boom, power rotation, short pedestal	$5,738

*Truck must be equipped with jackleg extending minimum 3' 9" (1.14 m.) from centerline of truck

*5,200 GVWR minimum chassis requirement. (Does not include bodies and accessories)

2003 Crane

- 2,000 lb. lift (max)
- 6,000 ft-lb capacity
- 5' 6" to 9' manual telescopic boom
- 360 degree continuous manual rotation with manual brake
- 15 ft. Remote Control Pendant
- 50 ft. of 1/4" 7,000 lbs. single line break strength aircraft quality cable
- 22 ft. high current battery cable
- Swivel block with hook latch
- 6-position boom elevation

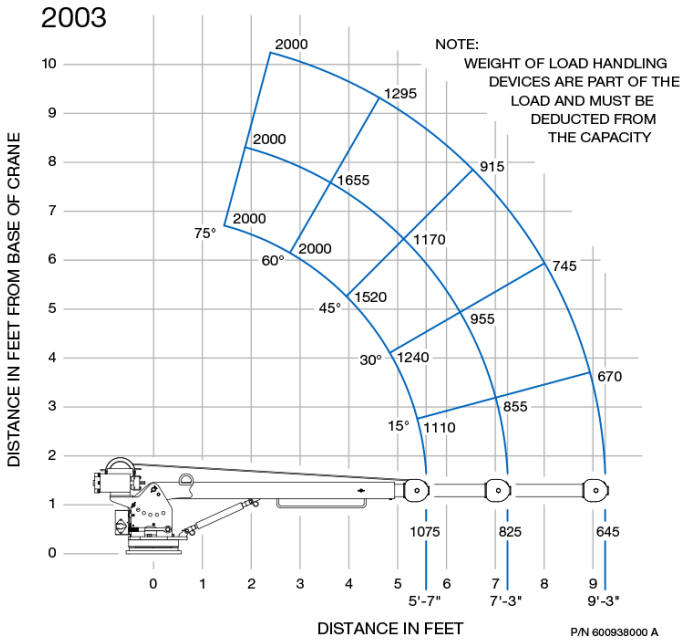

Model	Part Number	Description	List Price
2003	**600900000**	Manual rotation and extension	$4,438

*Truck must be equipped with jackleg extending minimum 3' 3" (1 m.) from centerline of truck

*8,000 GVWR minimum chassis requirement. (Does not include bodies and accessories)

3203EH Cranes

- 3,200 lb. lift (max)
- 10,000 ft-lb capacity
- Electric or hydraulic hoist
- Hydraulic power boom elevation
- 62 ft. of 7/32" 5,600 lbs. single line break strength cable
- - 5 to 75 degree boom elevation
- 30 ft. / min. line pull
- 360 degree continuous hydraulic power rotation

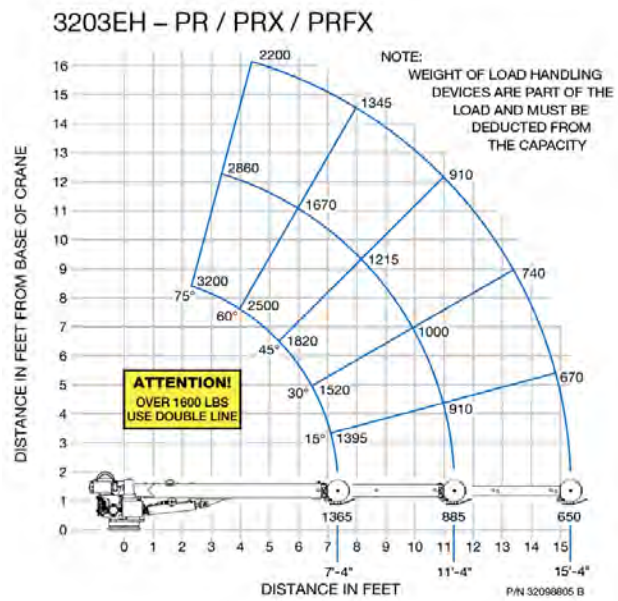

NexStar Features

- Hydraulic Hoist
- Proportional Control
- LCD Diagnostics Screen on Receiver
- Status Light
- Level Sensors (for Crane Load Management)

Model	Part Number	Description	List Price
3203 PR Tethered Pendant	**320989003**	Manual boom extensions to 15’	$9,197
3203 PRX Tethered Pendant	**320989002**	Hydraulic boom extension to 11', manual extension to 15'	$11,077
3203 PRFX Tethered Pendant	**320990001**	Hydraulic boom extension to 15'	$12,458
3203 PR Omnex Wireless Control	**320989005**	Manual boom extension to 15’	$10,041
3203 PRX Omnex Wireless Control	**320989004**	Hydraulic boom extension to 11', manual extension to 15'	$11,903
3203 PRFX Omnex Wireless Control	**320990000**	Hydraulic boom extension to 15'	$13,262
3203 PR NexStar Wireless Control	**320991003**	Hydraulic Planetary Hoist – Manual boom extension to 15’	$13,658
3203 PRX NexStar Wireless Control	**320991001**	Hydraulic Planetary Hoist – Hydraulic boom extension to 11’, manual extension to 15’	$14,734
3203 PRFX NexStar Wireless Control	**320991005**	Hydraulic Planetary Hoist – Hydraulic boom extension to 15’	$16,352

*Truck must be equipped with jackleg extending minimum 3' 9" (1.14 m.) from centerline of truck

*8,800 GVWR minimum chassis requirement. (Does not include bodies and accessories)

3203H Crane

- 3,200 lb. lift (max)
- 10,000 ft-lb capacity
- Proportional control
- 370 degree power rotation
- Power boom elevation, power hoist, and power extension
- 5 GPM @ 2,200 psi hydraulic requirements
- 62 ft. of 7/32" 5,600 lbs. single line break strength cable
- Safety engine-off switch on pendant
- Automatic overload protection

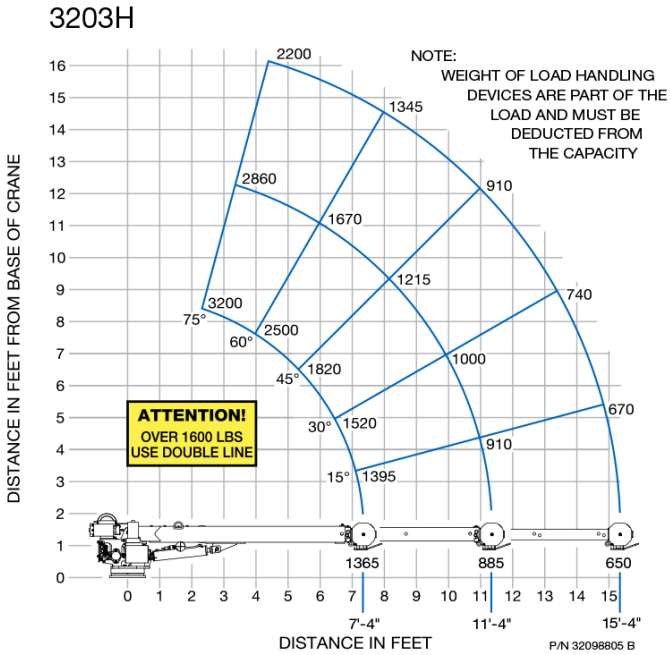

Model	Part Number	Description	List Price
3203H Tethered Pendant	**320989001**	Power extension to 11’, manual extension to 15’	$13,624
3203H Omnex Wireless Control	**320989000**	Power extension to 11’, manual extension to 15’	$14,664

*Truck must be equipped with jackleg extending minimum 3' 9" (1.14 m.) from centerline of truck

*8,800 GVWR minimum chassis requirement. (Does not include bodies and accessories)

4004EH Cranes – 16’

- 4,000 lb. lift (max)
- 16,000 ft-lb capacity
- Electric or hydraulic hoist
- Hydraulic power boom elevation
- 80 ft. of 5/16" 9,800 lbs. single line break strength cable
- - 5 to 75 degree boom elevation
- Non-tipping swiveling travel block with latch
- 360 degree continuous hydraulic power rotation

NexStar Features

- Hydraulic Hoist
- Proportional Control
- LCD Diagnostics Screen on Receiver
- Status Light
- Level Sensors (for Crane Load Management)

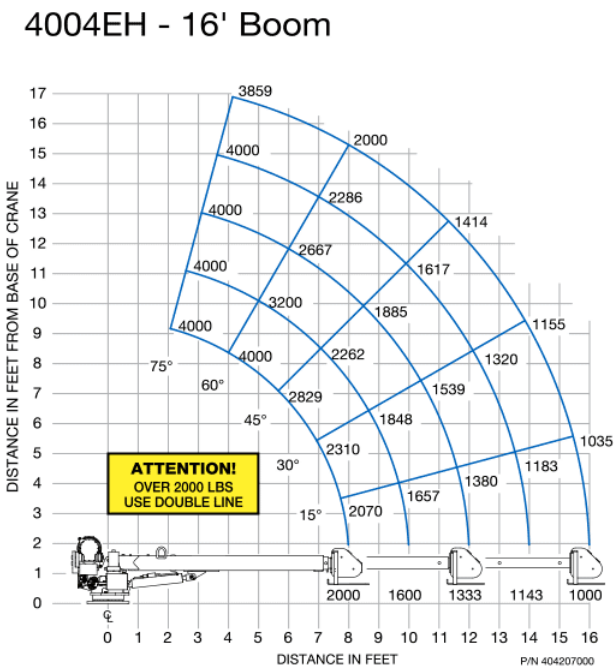

Model	Part Number	Description	List Price
4004 EH Tethered Pendant	**404181001**	Hydraulic boom extension to 12’, manual extension to 16’	$14,474
4004EH Omnex Wireless Control	**404181003**	Hydraulic boom extension to 12’, manual extension to 16’	$15,133
4004 EH NexStar Wireless Control	**404241001**	Hydraulic boom extension to 12’, manual extension to 16’	$18,227

*Truck must be equipped with 738896000 outriggers or equal

*10,500 GVWR minimum chassis requirement. (Does not include bodies and accessories)

4004EH Cranes – 20’

- 4,000 lb. lift (max)
- 16,000 ft-lb capacity
- Electric or hydraulic hoist
- Hydraulic power boom elevation
- 80 ft. of 5/16" 9,800 lbs. single line break strength cable
- - 5 to 75 degree boom elevation
- Non-tipping swiveling travel block with latch
- 360 degree continuous hydraulic power rotation

NexStar Features

- Hydraulic Hoist
- Proportional Control
- LCD Diagnostics Screen on Receiver
- Status Light
- Level Sensors (for Crane Load Management)

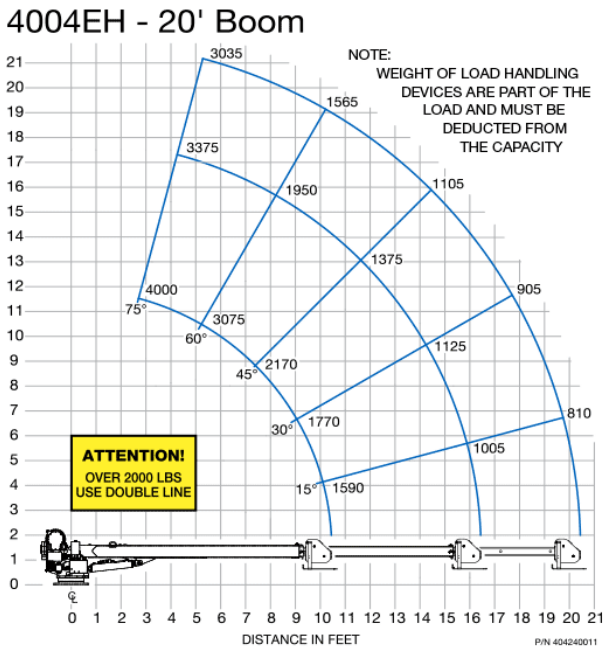

Model	Part Number	Description	List Price
4004 EH Tethered Pendant	**404240020**	Hydraulic boom extension to 16’, manual extension to 20’	$14,752
4004 EH Omnex Wireless Control	**404240030**	Hydraulic boom extension to 16’, manual extension to 20’	$15,413
4004 EH NexStar Wireless Control	**404241003**	Hydraulic boom extension to 12’, manual extension to 16’	$18,714

*Truck must be equipped with 738896000 outriggers or equal

*10,500 GVWR minimum chassis requirement. (Does not include bodies and accessories)

5005EH Cranes

- 5,000 lb. lift (max)
- 25,000 ft-lb capacity
- Full power extension to 20’
- Power boom elevation, power hoist, and power rotation
- 2.5 hp 24 volt hoist motor
- 80 ft. of 5/16" 9,800 lbs. single line break strength cable
- - 14 to 75 degree boom elevation
- Non-tipping swiveling travel block with latch
- Automatic overload protection for hoist up, boom extend and boom down functions
- 24 volt DC hydraulic power unit

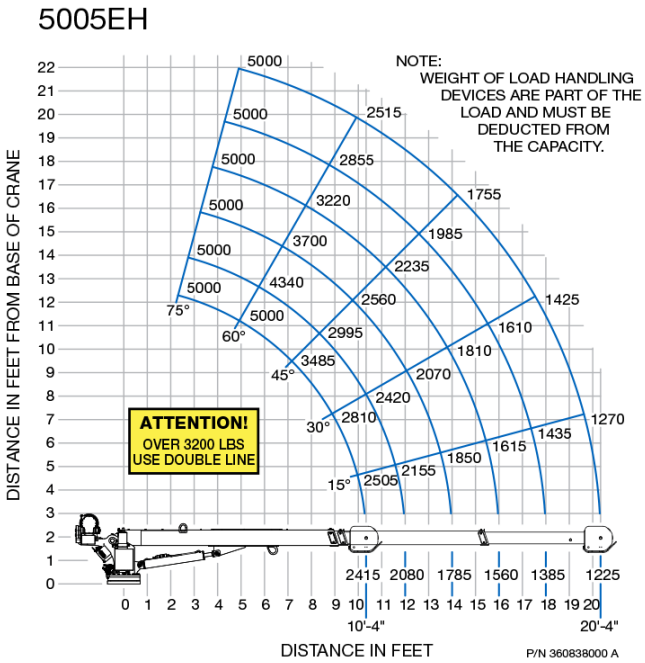

Model	Part Number	Description	List Price
5005 EH Tethered Pendant	**360645000**	360 degree continuous rotation	$19,147
5005 EH Tethered Pendant	**360645001**	370 degree non-continuous rotation	$18,645
5005 EH Omnex Wireless Control	**360645002**	360 degree continuous rotation	$20,018
5005 EH Omnex Wireless Control	**360645003**	370 degree non-continuous rotation	$19,332

*Truck must be equipped with 738896000 outriggers or equal

*14,500 GVWR minimum chassis requirement. (Does not include bodies and accessories)

HC-5 Cranes

- 5,000 lb. lift (max)
- 25,000 ft-lb capacity
- Full power extension to 20’
- Power boom elevation, power hoist, and power rotation
- 80 ft. of 5/16" 9,800 lbs. single line break strength cable
- - 14 to 75 degree boom elevation
- Heavy duty swivel block with latch
- 370 degree rotation
- 60 ft./min. single line speed
- 8 GPM @ 2,750 psi hydraulic requirement
- Automatic overload protection for hoist up, boom extend, and boom down

NexStar Features

- Proportional control
- LCD receiver
- LCD readout on controller
- Pistol grip with thumb tip control of all functions
- Angle detection of the boom and truck using two 3-axis sensors
- Automatic speed reduction at 90% capacity

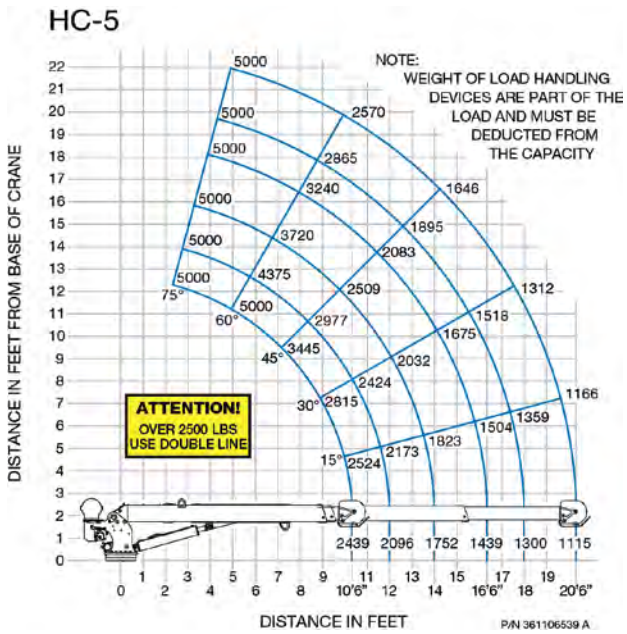

Model	Part Number	Description	List Price
HC-5 NexStar Wireless Control	**361106521**	NexStar III wireless control	$20,124

*Truck must be equipped with 738896000 outriggers or equal

*14,500 GVWR minimum chassis requirement. (Does not include bodies and accessories)

6006EH Cranes

- 6,000 lb. lift (max)
- 36,000 ft-lb capacity
- Full power extension to 20’ 4”
- Power boom elevation, power hoist, and power rotation
- 2.5 hp 24 volt hoist motor
- 95 ft. of 3/8" 14,400 lbs. single line breaking strength aircraft quality cable
- - 14 to 75 degree boom elevation
- Non-tipping swiveling travel block with latch
- Automatic overload protection for hoist up, boom extend and boom down functions
- 24 volt DC hydraulic power unit

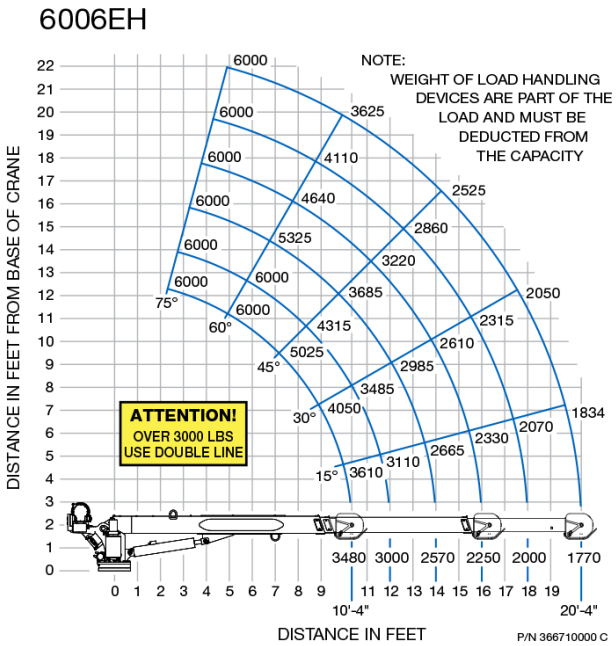

Model	Part Number	Description	List Price
6006 EH Tethered Pendant	**366600000**	360 degree continuous rotation	$22,098
6006 EH Tethered Pendant	**366780000**	370 degree non-continuous rotation	$21,108
6006 EH Omnex Wireless Control	**366600001**	360 degree continuous rotation	$23,304
6006 EH Omnex Wireless Control	**366790000**	370 degree non-continuous rotation	$22,477

*Truck must be equipped with 738896000 outriggers or equal

*14,500 GVWR minimum chassis requirement. (Does not include bodies and accessories)

HC-6 Cranes

- 6,000 lb. lift (max)
- 35,000 ft-lb capacity
- Full power extension to 20’
- Power boom elevation, power hoist, and power rotation
- 80 ft. of 5/16" 9,800 lbs. single line break strength cable
- - 14 to 75 degree boom elevation
- Heavy duty swivel block with latch
- 370 degree rotation
- 60 ft./min. single line speed
- 8 GPM @ 2,750 psi hydraulic requirement
- Automatic overload protection for hoist up, boom extend, and boom down

NexStar Features

- Proportional control
- LCD receiver
- LCD readout on controller
- Pistol grip with thumb tip control of all functions
- Angle detection of the boom and truck using two
  3-axis sensors
- Automatic speed reduction at 90% capacity

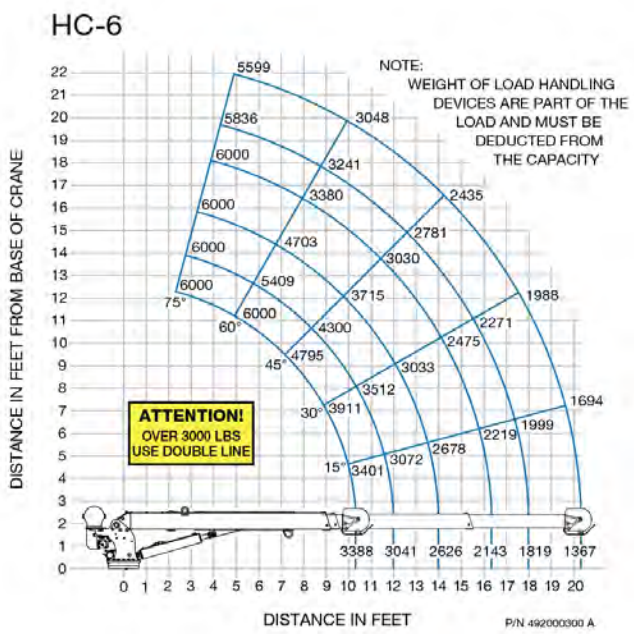

Model	Part Number	Description	List Price
HC-6 Tethered Pendant	**492000001**	Tethered pendant	$19,084
HC-6 NexStar Wireless Control	**492000003**	NexStar III wireless remote	$20,124

*Truck must be equipped with 738896000 outriggers or equal

*14,500 GVWR minimum chassis requirement. (Does not include bodies and accessories)

HC-7 Cranes

- 7,000 lb. lift (max)
- 38,000 ft-lb capacity
- Full power extension to 20’
- Power boom elevation, power hoist, and power rotation
- 95 ft. of 3/8" 14,700 lbs. single line break strength aircraft quality cable
- - 14 to 75 degree boom elevation
- Heavy duty swivel block with latch
- 370 degree rotation
- 55 ft./min. single line speed
- 8 GPM @ 2,750 psi hydraulic requirement
- Automatic overload protection for hoist up, boom extend, and boom down

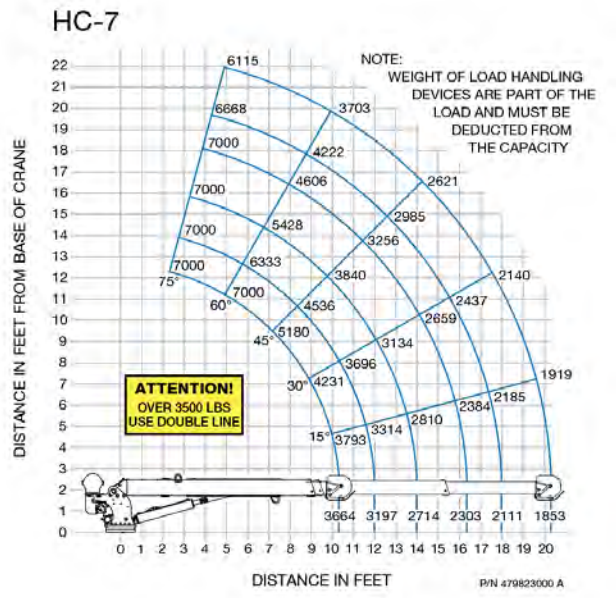

NexStar Features

- Proportional control
- LCD receiver
- LCD readout on controller
- Pistol grip with thumb tip control of all functions
- Angle detection of the boom and truck using two 3-axis sensors
- Automatic speed reduction at 90% capacity

Model	Part Number	Description	List Price
HC-7 Tethered Pendant	**477000001**	Tethered pendant	$20,904
HC-7 NexStar Wireless Control	**477000002**	NexStar III wireless remote	$21,944

*Truck must be equipped with 738896000 outriggers or equal

*14,500 GVWR minimum chassis requirement. (Does not include bodies and accessories)

HC-8 Crane

- 8,000 lb. lift (max)
- 49,000 ft-lb capacity
- Full power extension to 20’
- Power boom elevation, power hoist, and power rotation
- 95 ft. of 3/8" 14,700 lbs. single line break strength aircraft quality cable
- - 14 to 75 degree boom elevation
- Heavy duty swivel block with latch
- 370 degree rotation
- 55 ft./min. single line speed
- 8 GPM @ 2,750 psi hydraulic requirement
- Automatic overload protection for hoist up, boom extend, and boom down

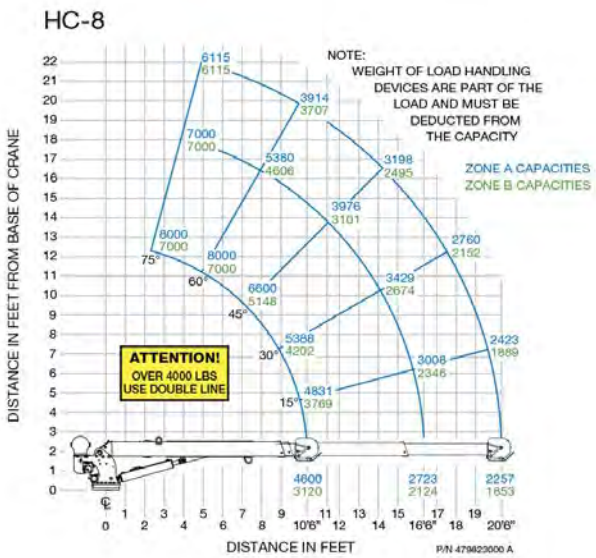

NexStar Features

- Proportional control
- LCD receiver
- LCD readout on controller
- Pistol grip with thumb tip control of all functions
- Angle detection of the boom and truck using two 3-axis sensors
- Automatic speed reduction at 90% capacity

Model	Part Number	Description	List Price
HC-8 NexStar Wireless Control	**479000001**	NexStar III wireless remote	$23,764

*Truck must be equipped with 738493000 outriggers or equal

*19,500 GVWR minimum chassis requirement. (Does not include bodies and accessories)

8406H Cranes

- 8,400 lb. lift (max)
- 50,000 ft-lb capacity
- Full power extension to 20’
- Power boom elevation, power hoist, and power rotation
- 95 ft. of 3/8" 14,700 lbs. single line break strength aircraft quality cable
- - 14 to 75 degree boom elevation
- Non-tipping swivel block with latch
- 370 degree rotation
- 60 ft./min. single line speed
- 13 GPM @ 2,750 psi hydraulic requirement
- Automatic overload protection for hoist up, boom extend, and boom down

NexStar Features

- Proportional control
- LCD receiver
- LCD readout on controller
- Pistol grip with thumb tip control of all functions
- Angle detection of the boom and truck using two 3-axis sensors
- Automatic speed reduction at 90% capacity

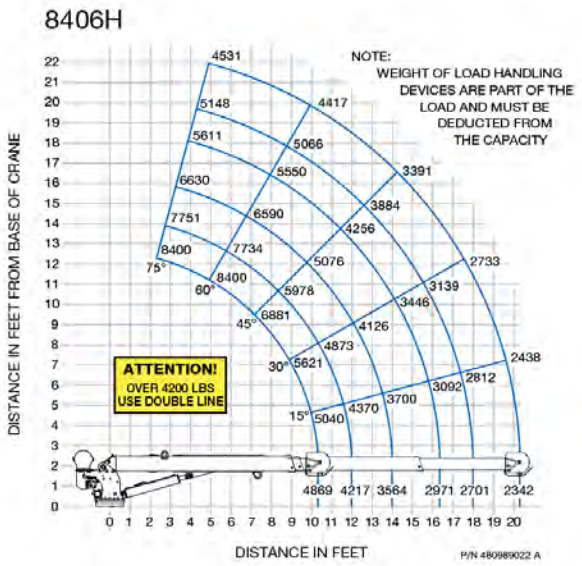

Model	Part Number	Description	List Price
8406H Tethered Pendant	**480988001**	Tethered pendant	$23,634
8406H NexStar Wireless Control	**480989006**	NexStar III wireless control	$25,661

*Truck must be equipped with 560142000 outriggers or equal

*20,500 GVWR minimum chassis requirement. (Does not include bodies and accessories)

HC-9 Cranes

- 9,000 lb. lift (max)
- 59,000 ft-lb capacity
- Full power extension to 20’
- Power boom elevation, power hoist, and power rotation
- 95 ft. of 3/8" 14,700 lbs. single line break strength aircraft quality cable
- - 14 to 75 degree boom elevation
- Heavy duty swivel block with latch
- 370 degree rotation
- 60 ft./min. single line speed
- 13 GPM @ 2,750 psi hydraulic requirement
- Automatic overload protection for hoist up, boom extend, and boom down

NexStar Features

- Proportional control
- LCD receiver
- LCD readout on controller
- Pistol grip with thumb tip control of all functions
- Angle detection of the boom and truck using two 3-axis sensors
- Automatic speed reduction at 90% capacity

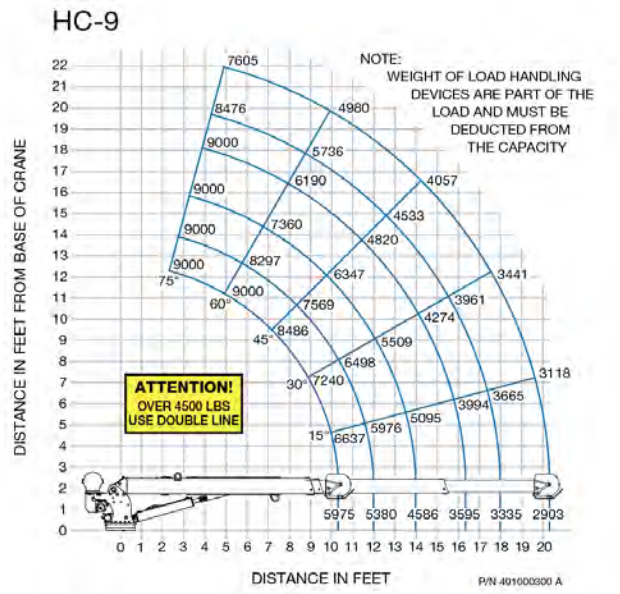

Model	Part Number	Description	List Price
HC-9 Tethered Pendant	**491000001**	Tethered pendant	$24,544
HC-9 NexStar Wireless Control	**491000002**	NexStar III wireless control	$25,584

*Truck must be equipped with 772020000 outriggers or equal

*26,000 GVWR minimum chassis requirement. (Does not include bodies and accessories)

HC-10 Crane

- 10,000 lb. lift (max)
- 60,000 ft-lb capacity
- Full power extension to 24’ 11”
- Power boom elevation, power hoist, and power rotation
- 120 ft. of 7/16", aircraft quality cable
- - 12 to 75 degree boom elevation
- Non-tipping swivel block with latch
- 370 degree rotation
- 60 ft./min. single line speed
- 15 GPM @ 3,000 psi hydraulic requirement
- Automatic overload protection for hoist up, boom extend, and boom down

NexStar Features

- Proportional control
- LCD receiver
- LCD readout on controller
- Pistol grip with thumb tip control of all functions
- Angle detection of the boom and truck using two 3-axis sensors
- Automatic speed reduction at 90% capacity

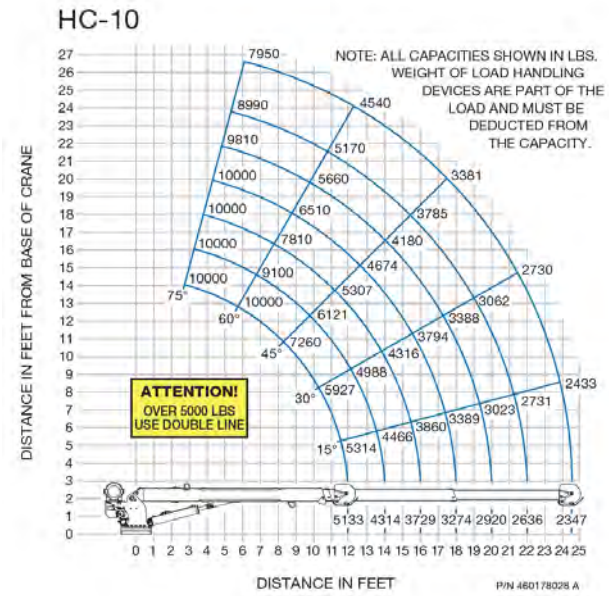

Model	Part Number	Description	List Price
HC-10 NexStar Wireless Control	**460179001**	NexStar III wireless control	$27,404

*Truck must be equipped with 772020000 outriggers or equal

*26,000 GVWR minimum chassis requirement. (Does not include bodies and accessories)

HC-12s Crane

- 12,000 lb. lift (max)
- 60,000 ft-lb capacity
- Full power extension to 25’
- Power boom elevation, power hoist, and power rotation
- 120 ft. of 7/16", aircraft quality cable
- - 12 to 75 degree boom elevation
- Non-tipping swivel block with latch
- 370 degree rotation
- 60 ft./min. single line speed
- 15 GPM @ 3,000 psi hydraulic requirement
- Automatic overload protection for hoist up, boom extend, and boom down

NexStar Features

- Proportional control
- LCD receiver
- LCD readout on controller
- Pistol grip with thumb tip control of all functions
- Angle detection of the boom and truck using two 3-axis sensors
- Automatic speed reduction at 90% capacity

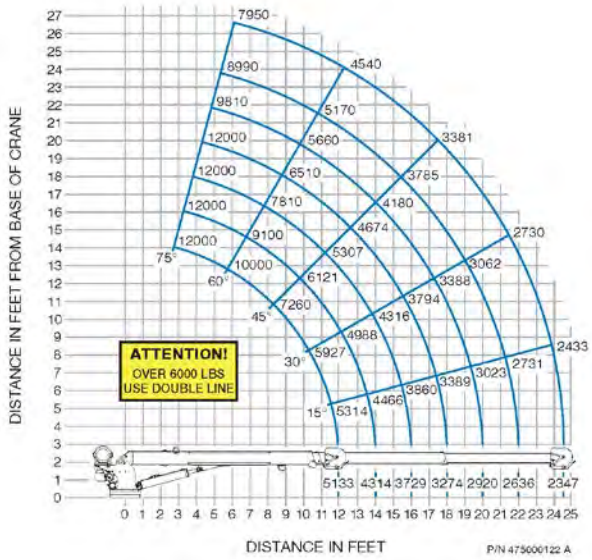

Model	Part Number	Description	List Price
HC-12s NexStar Wireless Control	**475000003**	NexStar III wireless control	$28,174

*Truck must be equipped with 772020000 outriggers or equal

*29,000 GVWR minimum chassis requirement. (Does not include bodies and accessories)

HC-12 Crane

- 12,000 lb. lift (max)
- 85,000 ft-lb capacity
- Full power extension to 30’
- Power boom elevation, power hoist, and power rotation
- 120 ft. of 7/16", aircraft quality cable
- - 12 to 75 degree boom elevation
- Non-tipping swivel block with latch
- 370 degree rotation
- 60 ft./min. single line speed
- 15 GPM @ 2,800 psi hydraulic requirement
- Automatic overload protection for hoist up, boom extend, and boom down

NexStar Features

- Proportional control
- LCD receiver
- LCD readout on controller
- Pistol grip with thumb tip control of all functions
- Angle detection of the boom and truck using two 3-axis sensors
- Automatic speed reduction at 90% capacity

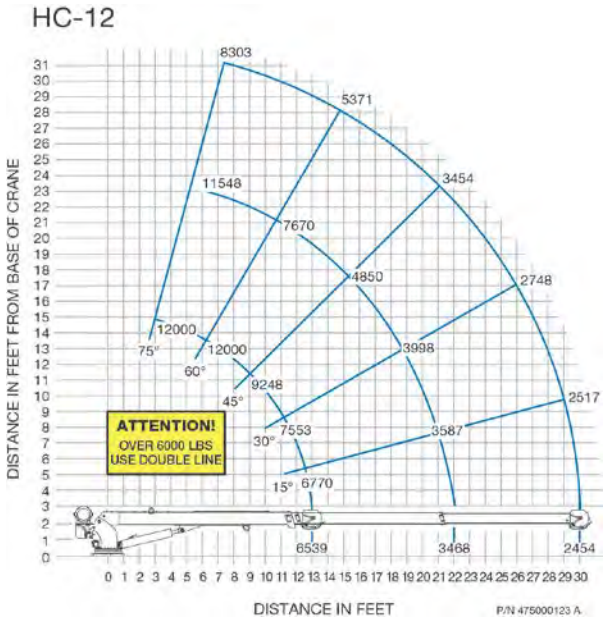

Model	Part Number	Description	List Price
HC-12 NexStar Wireless Control	**475000004**	NexStar III wireless control	$31,044

*Truck must be equipped with 772020000 outriggers or equal

*29,000 GVWR minimum chassis requirement. (Does not include bodies and accessories)

HC-14 Crane

- 14,000 lb. lift (max)
- 70,000 ft-lb capacity
- Full power extension to 30’ 8”
- Power boom elevation, power hoist, and power rotation
- 120 ft. of 1/2", aircraft quality cable
- - 12 to 75 degree boom elevation
- Non-tipping swivel block with latch
- 370 degree rotation
- 60 ft./min. single line speed
- 15 GPM @ 2,800 psi hydraulic requirement
- Automatic overload protection for hoist up, boom extend, and boom down

NexStar Features

- Proportional control
- LCD receiver
- LCD readout on controller
- Pistol grip with thumb tip control of all functions
- Angle detection of the boom and truck using two 3-axis sensors
- Automatic speed reduction at 90% capacity

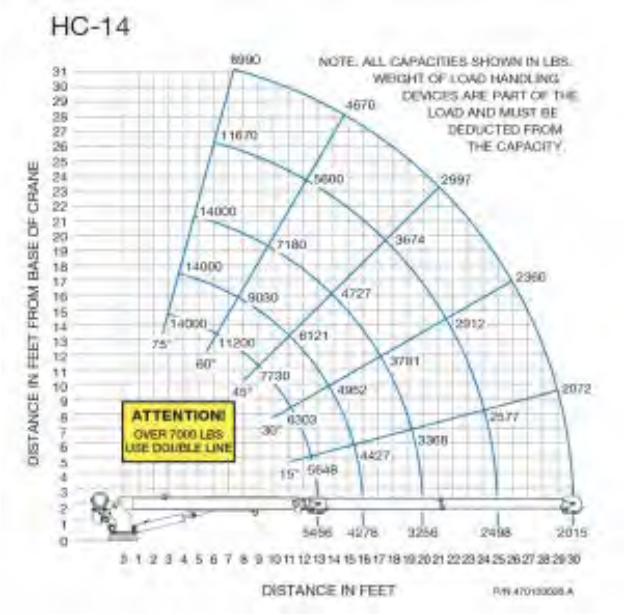

Model	Part Number	Description	List Price
HC-14 NexStar Wireless Control	**470103001**	NexStar III wireless control	$34,684

*Truck must be equipped with 772020000 outriggers or equal

*29,000 GVWR minimum chassis requirement. (Does not include bodies and accessories)

Crane Parts & Accessories

NexStar II Parts			
Part Number	**Description**	**List Price**	**Installed List Price**
366823252	NexStar II Receiver	$1,800	
366823256	NexStar II Wireless Remote (12 Button)	$1,311	
366823930	NexStar II Tethered Remote	$1,155	
366823259	NexStar II Remote / Receiver Kit	$2,982	
366823933	NexStar II Decals for Remote	$44.50	

NexStar III Parts			
Part Number	**Description**	**List Price**	**Installed List Price**
366823963	NexStar III Receiver	$1,900	
366823964	NexStar III Wireless Remote	$2,075	
366823965	NexStar III Remote / Receiver Kit	$3,300	
366823966	NexStar III Tether Cable	$125	
366823280	NexStar III Upgrade Kit (from NexStar I or II)	$3,500	
739318255	NexStar III Cradle Bracket (used when switching from a NexStar II to a NexStar III, only the brackets needs to be switched out)	$78	

NexStar II Transmitter Cradle Kit			
Part Number	**Description**	**List Price**	**Installed List Price**
739171100	NexStar II Cradle Kit	$245	
739171110	Install NexStar II Cradle Kit (Add to Part Number Above)		Add - $50

NexStar III Transmitter Cradle Kit			
Part Number	**Description**	**List Price**	**Installed List Price**
739318199	NexStar III Cradle Kit	$253	
739318198	NexStar III Cradle Kit Installed (Includes Above Part Number)		$340

NexStar II & NexStar III Boom Tip Lights			
Part Number	**Description**	**List Price**	**Installed List Price**
475300050	Boom Tip Lights for Models 3203 - 4004	$615	
475300058	Boom Tip Lights for Models 3203 – 4004 Installed (Includes Above Part Number)		$750
475300000	Boom Tip Lights for Models 5005 – HC-12	$675	
475300005	Boom Tip Lights for Models 5005 – HC-12 Installed (Includes Above Part Number)		$750
475300035	Boom Tip Lights for Model HC-14	$725	
475300040	Boom Tip Lights for Model HC-14 Installed (Includes Above Part Number)		$800

Boom Support			
Part Number	**Description**	**List Price**	**Installed List Price**
715064010	Boom Support (5005 – HC-14 cranes)	$241	
715064020	Boom Support (3203 & 4004 cranes)	$241	
716858000	Install Boom Support (Add to Part Number Above)		Add - $112

Crane Accessories

Crane Accessories			
Part Number	**Description**	**List Price**	**Installed List Price**
475500000	Jib (HC-12 and HC-14 cranes only)	$1,411.00	

Outriggers & Jacklegs			
Part Number	**Description**	**List Price**	**Installed List Price**
700320000	Detachable Jackleg	$145	
700343000	Medium Duty Screw Base Detachable Jackleg (16" long)	$215	
700347000	Medium Duty Screw Base Detachable Jackleg (20" long)	$254	
700351000	Medium Duty Screw Base Detachable Jackleg (24" long)	$271	
700354000	Medium Duty Screw Base Detachable Jackleg (27" long)	$327	
200745000	Heavy-Duty Quick Detachable Jackleg (Jacklegs do not provide 360 degree stability for cranes of 10,000 ft. lbs.)	$358	
320980001	Manual Out; Up/Down Outriggers 4004 Model or Smaller Crane (for single rear wheel vehicle)	$1,093	
320980000	Manual Out; Up/Down Outriggers 4004 Model or Smaller crane (for dual rear wheel vehicle)	$1,093	
738996000	Full Manual Outrigger Assembly Right Side Crane (for use with HC-7 or smaller crane)	$1,963	
738897000	Full Manual Outrigger Assembly Left Side Crane (for use with HC-7 or smaller crane)	$1,963	
738843000	Manual I/O - Hydraulic U/D - Outrigger Assembly Right Side Crane (for use with HC-7 or smaller crane)	$4,093	
738844000	Manual I/O - Hydraulic U/D - Outrigger Assembly Left Side Crane (for use with HC-7 or smaller crane)	$4,093	
738493000	Full Hydraulic Outrigger Assembly Right Side Crane (for use with HC-8 or smaller crane - required when mounting an HC-8 crane to a Titan 38 body)	$4,454	
738494000	Full Hydraulic Outrigger Assembly Left Side Crane (for use with HC-8 or smaller crane - required when mounting an HC-8 crane to a Titan 38 body)	$4,454	
560570100	Hydraulic In/Out, Up/Down Outriggers Right Side Crane (for 8406H crane or equivalent)	$5,035	
560571100	Hydraulic In/Out, Up/Down Outriggers Left Side Crane (for 8406H crane or equivalent)	$5,035	
560142000	Manual In/Out, Up/Down Outriggers Right Side Crane (for 8406H crane or equivalent)	$2,183	
772020000	Hydraulic In/Out, Up/Down Outriggers Right Side Crane (for Titan 60 and Titan 70 crane bodies)	$7,163	
772021000	Hydraulic In/Out, Up/Down Outriggers Left Side Crane (for Titan 60 and Titan 70 crane bodies)	$7,163	
760431000	Manual In/Out, Up/Down Outriggers Right Side Crane (for Titan 60 body only – will not work with a Titan 70 crane body)	$4,263	

Titan 16 – 9’ Body (60” Cab-to-Axle)

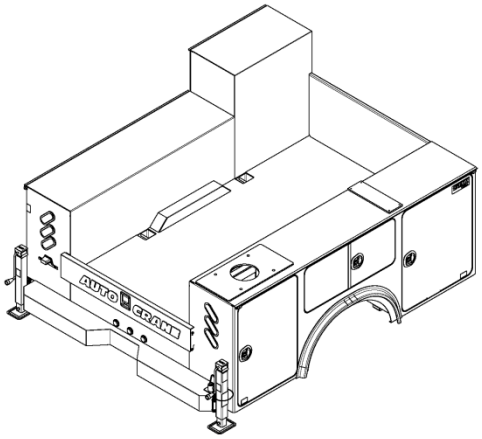

- 10,900 GVWR
- One-piece 10 gauge side-pack design
- Three angled oval lights on the rear of the body
- Integral crane reinforcement up to 16,000 ft. lbs.
- Fenderette
- Flush door panels with bulb seal gasket
- Three-point latching system
- Rugged, durable interlocking channel frame
- Rounded door corners
- Shelf kit is standard – (2) in each front compartment and (1) in each horizontal compartment

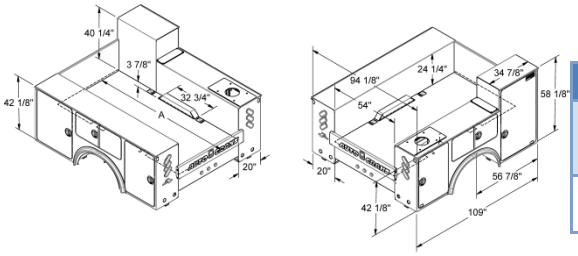

Part Number	Description	List Price
715320001	Titan 16-60CA – RS Tall – RS Crane	$10,676
715320005	Titan 16-60CA – RS Tall – LS Crane	$10,676

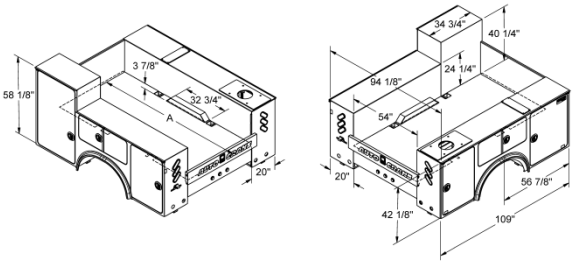

Part Number	Description	List Price
715320002	Titan 16-60CA – LS Tall – RS Crane	$10,676
715320006	Titan 16-60CA – LS Tall – LS Crane	$10,676

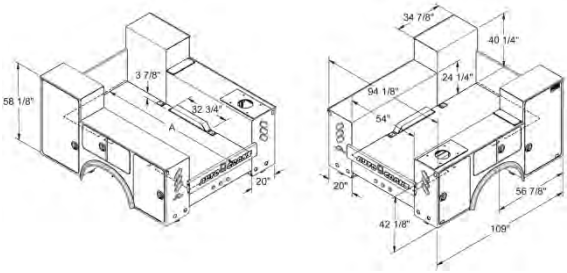

Part Number	Description	List Price
715320003	Titan 16-60CA – LS/RS Tall – RS Crane	$11,278
715320007	Titan 16-60CA – LS/RS Tall – LS Crane	$11,278

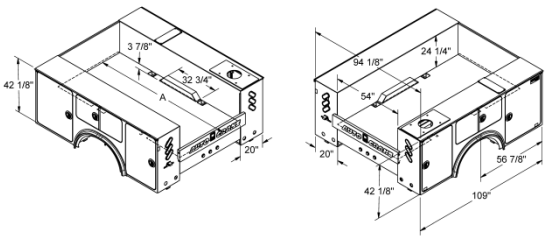

Part Number	Description	List Price
715320004	Titan 16-60CA – Standard – RS Crane	$10,346
715320008	Titan 16-60CA – Standard – LS Crane	$10,346

Length for “A” Dimension – Standard Bulkhead 107 5/8” – Recessed Bulkhead 99”

Titan 16 – 9' Body (60" CA) Accessories

Bulkheads (Choose one with order)			
Part Number	**Description**	**List Price**	**Installed List Price**
715306010	Standard bulkhead - Titan 16 bulkhead 42" sides		N/C
715306011	Recessed bulkhead – Titan 16 bulkhead 42" sides		N/C

Additional Shelving			
Part Number	**Description**	**List Price**	**Installed List Price**
715070001	Shelf kit for rear compartment opposite crane box (2) shelves	$192	
715078000	Single shelf for front compartment	$143	
716868000	Install single shelves (Add to part number above for each shelf)		Add $43.25
715309300	Slide out tray for front compartment	$965	
716854000	Install slide-out tray (Add to part number above)		Add $143

Toolboxes			
Part Number	**Description**	**List Price**	**Installed List Price**
715160100	Front compartment – Aluminum Toolbox (1) 7", (2) 5", (4) 3"	$1,660	
715160101	Front compartment – Aluminum Toolbox (1) 7", (2) 5", (5) 3"	$1,830	
715160300	Horizontal compartment – Aluminum Toolbox (4) 3"	$1,575	
715160301	Horizontal compartment – Aluminum Toolbox (3) 3"	$1,295	
716862000	Install toolbox (Add to part number above for each toolbox)		Add $263

Oxygen/Acetylene Compartment Options			
Part Number	**Description**	**List Price**	**Installed List Price**
736233000	Three oxygen/acetylene bottle holders with hose holder (for standard or tall compartment)	$450	
560483100	Oxy divider / shelving package for front compartment (fits 58" tall front compartment)	$769	
716859000	Install bottle holders (Add to part number above)		Add $102
715136000	Drop-Well Assembly (2" Deep)	$181	
716865000	Install drop-well (Add to part number above)		Add $84

Bumper / Outrigger			
Part Number	**Description**	**List Price**	**Installed List Price**
715100000	Manual outriggers with standard 8" bumper – Right Side Crane	$1,210	
715100001	Manual outriggers with standard 8" bumper – Left Side Crane	$1,210	
715150000	Manual outriggers with standard 12" bumper – Right Side Crane	$1,421	
715150001	Manual outriggers with standard 12" bumper – Left Side Crane	$1,421	
715158000	Manual outrigger with 20" workbench bumper – Right Side Crane	$2,350	
715158400	Manual outrigger with 20" workbench bumper – Left Side Crane	$2,350	
716857000	Install bumper/outrigger (Add to part number above)		Add $195

Titan 16 – 9' Body (60" CA) Accessories

Receiver Hitch			
Part Number	**Description**	**List Price**	**Installed List Price**
715135000	Receiver hitch (for 8" and 12" bumpers)	$426	
738850125	Receiver hitch (for 20" bumper)	$526	
716874000	Install receiver hitch (Add to part number above)		Add $99.25

Interior Lighting Options			
Part Number	**Description**	**List Price**	**Installed List Price**
475300111	LED interior compartment lighting	$500	
716869000	Install LED interior lighting (Add to part number above)		Add $475
560271021	Dome light compartment lighting	$235	
716880000	Install dome lights (Add to part number above)		Add $113

Grab Handles			
Part Number	**Description**	**List Price**	**Installed List Price**
758025000	Grab handle		$63.75

Paint			
Part Number	**Description**	**List Price**	**Installed List Price**
750631000	(Auto Crane White) Painted on both the outside and inside of the body	$1,974	
716881010	(Auto Crane White) Painted on the outside of the body and Zolatone on the inside of the compartments	$2,374	
716863000	(Auto Crane White) -painted inside compartments only	$713	
716881020	Zolatone - painted inside compartments only	$1,146	
900500000	Custom Paint	$2,768	

Bedliner			
Part Number	**Description**	**List Price**	**Installed List Price**
717510001	Bedliner - Floor and Sides Only	$1,233	
717510003	Bedliner - Floor, Sides and Compartment Tops	$1,507	
717510005	Bedliner - Workbench bumper	$480	
717510006	Arctic Package	$1,150	
717510008	Bedliner - Front of Body	$641	
900506000	Bedliner Repair Kit (8 sq. ft.)	$630	

Titan 16 – 9' Body (60" CA) Accessories

Boom Support			
Part Number	**Description**	**List Price**	**Installed List Price**
715064020	Boom support (3203 & 4004 cranes)	$241	
716858000	Install boom support (Add to part number above)		Add $112

Work Light Options			
Part Number	**Description**	**List Price**	**Installed List Price**
750825000	Floodlight Kit - Round Tractor Lights	$104	
750825001	Floodlight Kit - 50 Watt Trapezoid Lights	$132	
760629004	Work light - 12VDC - Halogen Betts	$211	
475300010	LED Floodlight	$116	
716861000	Install work lights (Add to part number above)		Add $98

Compartment Hook Options			
Part Number	**Description**	**List Price**	**Installed List Price**
750613000	Oxygen / acetylene hook assembly	$35.75	
750614000	J-hook	$16.50	
750807000	Chain hook assembly	$68.75	
753241000	Swivel J-hook	$30.50	

Master Locking Systems			
Part Number	**Description**	**List Price**	**Installed List Price**
715309105	Master lock system stainless/steel – Standard body		$1,050
715309106	Master lock system stainless/steel – RS Tall body		$1,050
715309107	Master lock system stainless/steel – LS Tall body		$1,050
715309108	Master lock system stainless/steel – LS/RS Tall body		$1,050

Fuel & Fuel / DEF Cut-outs			
Part Number	**Description**	**List Price**	**Installed List Price**
715320020	Fuel / DEF filler cut-outs (2 cut-outs)		$275

Body Installation Kits			
Part Number	**Description**	**List Price**	**Installed List Price**
560579000	Body installation kit (for Ford F-350, F-450, and F-550 chassis)	$545	
560579100	Body installation kit (for Dodge chassis)	$595	

Titan 16 – 9' Body (60" CA) Accessories

Body Installation Charge			
Part Number	**Description**	**List Price**	**Installed List Price**
716851000	Install body (Add to body part number if upfit at factory)		$3,074

Crane Installation Charges			
Part Number	**Description**	**List Price**	**Installed List Price**
750678000	Install 2003, 3203, or 4004EH crane (Add to crane part number if upfit at factory)		$444
750679000	Install hydraulic crane (Add to crane part number if upfit at factory)		$860
360870000	Install 5005EH or 6006EH crane (Add to crane part number if upfit at factory)		$1,191

Equipment			
Part Number	**Description**	**List Price**	**Installed List Price**
750831000	ICC safety kit (Complies with FMVH Safety Standard No. 125, Sec. 571.125)	$72.50	
750061000	Fire extinguisher (Complies with FMCS Regs. Sec. 393.95 – classification 2 – A:10-B:C unit)	$132	
750681000	Backup safety alarm		$252

Spring Reinforcement			
Part Number	**Description**	**List Price**	**Installed List Price**
736995000	Spring reinforcement		$1,673

Hydraulic Reservoirs			
Part Number	**Description**	**List Price**	**Installed List Price**
480420100	15-gallon reservoir with return filter, sight gauge, and suction strainer	$382	
751095050	36-gallon bulkhead reservoir to fit inside 50" wide cargo area with return filter and sight gauge	$898	
738498000	23-gallon bulkhead reservoir to fit inside 50" wide cargo area with site gauge and return filter	$823	
340169400	Oil Cooler Kit (for use when oil temperature exceeds 180°, or application prevents install of recommended 2x total GPM tank capacity, or crane and/or compressor is operated in continuous duty applications)	$2,278	

Titan 16 – 9' Body (60" CA) Accessories

PTO (For Factory Installs Only)			
Part Number	**Description**	**List Price**	**Installed List Price**
736997000	PTO and installation for an automatic transmission		$3,926
736998000	PTO and installation for a manual transmission		$3,020

Hydraulic Installation Kits			
Part Number	**Description**	**List Price**	**Installed List Price**
367223100	Hydraulic Hose Kit for Dodge - Tandem Pump	$773	
367223200	Hydraulic Hose Kit for Ford F550 (Must also include the 560588000 and 480613000)	$773	
367223210	Hydraulic Hose Kit for Dodge - Single Pump (Must also include the 560588000 and 480613000)	$773	
560588000	Selector valve assembly	$1,070	
480613000	Din connector w/cord	$51	

Speed Control			
Part Number	**Description**	**List Price**	**Installed List Price**
480533000	Engine start / stop	$93.25	
480535000	Engine start / stop (Includes above part number)		$895
480534000	Auxiliary relay kit	$74.25	
480536000	Auxiliary relay kit (Includes above part number)		$759

Titan 16 – 11’ Body (84” Cab-to-Axle)

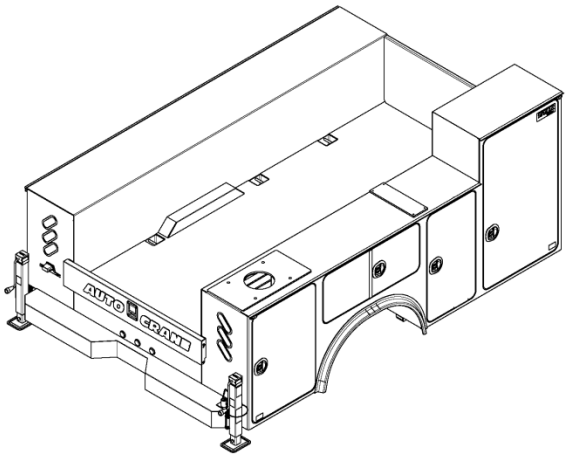

- 10,900 GVWR
- One-piece 10 gauge side-pack design
- Three angled oval lights on the rear of the body
- Integral crane reinforcement up to 16,000 ft. lbs.
- Fenderette
- Flush door panels with bulb seal gasket
- Three-point latching system
- Rugged, durable interlocking channel frame
- Rounded door corners
- Shelf kit is standard – (2) in each front compartment, (2) in each mid compartment, and (1) in each horizontal compartment

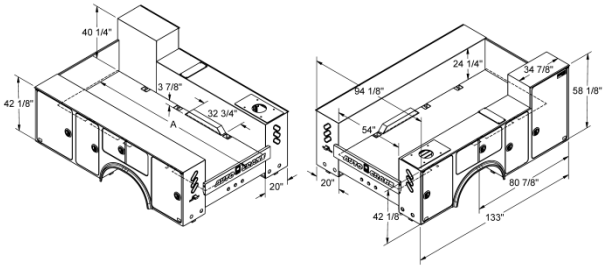

Part Number	Description	List Price
715330001	Titan 16-84CA – RS Tall – RS Crane	$12,421
715330005	Titan 16-84CA – RS Tall – LS Crane	$12,421

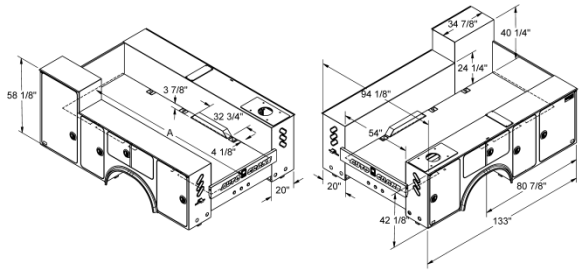

Part Number	Description	List Price
715330002	Titan 16-84CA – LS Tall – RS Crane	$12,421
715330006	Titan 16-84CA – LS Tall – LS Crane	$12,421

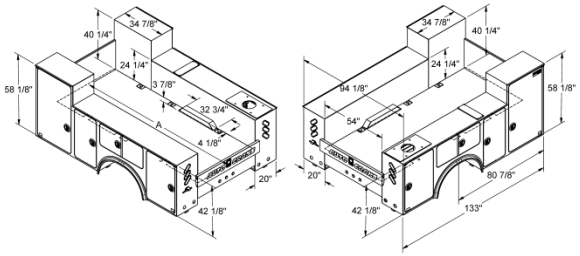

Part Number	Description	List Price
715330003	Titan 16-84CA – LS/RS Tall – RS Crane	$12,887
715330007	Titan 16-84CA – LS/RS Tall – LS Crane	$12,887

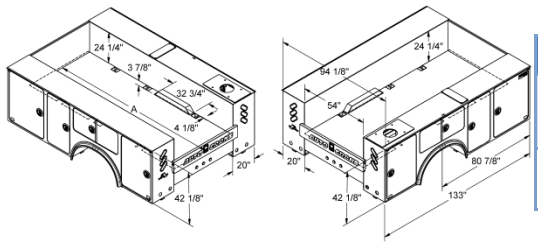

Part Number	Description	List Price
715330004	Titan 16-84CA – Standard – RS Crane	$11,956
715330008	Titan 16-84CA – Standard – LS Crane	$11,956

Length for “A” Dimension – Standard Bulkhead 131 5/8” – Recessed Bulkhead 123”

Titan 16 – 11' Body (84" CA) Accessories

Bulkheads (Choose one with order)			
Part Number	**Description**	**List Price**	**Installed List Price**
715306010	Standard bulkhead - Titan 16 bulkhead 42" sides		N/C
715306011	Recessed bulkhead – Titan 16 bulkhead 42" sides		N/C

Additional Shelving			
Part Number	**Description**	**List Price**	**Installed List Price**
715070001	Shelf kit for rear compartment opposite crane box (2) shelves	$192	
715078000	Single shelf for front compartment	$143	
715079000	Single shelf for mid compartment	$98.75	
716868000	Install single shelves (Add to part number above for each shelf)		Add $43.25
715309300	Slide out tray for front compartment	$965	
716854000	Install slide-out tray (Add to part number above)		Add $143

Toolboxes			
Part Number	**Description**	**List Price**	**Installed List Price**
715160100	Front compartment – Aluminum Toolbox (1) 7", (2) 5", (4) 3"	$1,660	
715160101	Front compartment – Aluminum Toolbox (1) 7", (2) 5", (5) 3"	$1,830	
715160300	Horizontal compartment – Aluminum Toolbox (4) 3"	$1,575	
715160301	Horizontal compartment – Aluminum Toolbox (3) 3"	$1,295	
716862000	Install toolbox (Add to part number above for each toolbox)		Add $263

Oxygen/Acetylene Compartment Options			
Part Number	**Description**	**List Price**	**Installed List Price**
736233000	Three oxygen/acetylene bottle holders with hose holder (for standard or tall compartment)	$450	
560483100	Oxy divider / shelving package for front compartment (fits 58" tall front compartment)	$769	
716859000	Install bottle holders (Add to part number above)		Add $102
715136000	Drop-Well Assembly (2" Deep)	$181	
716865000	Install drop-well(Add to part number above)		Add $84

Interior Lighting Options			
Part Number	**Description**	**List Price**	**Installed List Price**
475300112	LED interior compartment lighting	$650	
716869000	Install LED interior lighting (Add to part number above)		Add $475
560271001	Dome light compartment lighting	$249	
716880000	Install dome lights (Add to part number above)		Add $113

Titan 16 – 11' Body (84" CA) Accessories

Bumper / Outrigger			
Part Number	**Description**	**List Price**	**Installed List Price**
715100000	Manual outriggers with standard 8" bumper – Right Side Crane	$1,210	
715100001	Manual outriggers with standard 8" bumper – Left Side Crane	$1,210	
715150000	Manual outriggers with standard 12" bumper – Right Side Crane	$1,421	
715150001	Manual outriggers with standard 12" bumper – Left Side Crane	$1,421	
715158000	Manual outrigger with 20" workbench bumper – Right Side Crane	$2,350	
715158400	Manual outrigger with 20" workbench bumper – Left Side Crane	$2,350	
716857000	Install bumper/outrigger (Add to part number above)		Add $195

Receiver Hitch			
Part Number	**Description**	**List Price**	**Installed List Price**
715135000	Receiver hitch (for 8" and 12" bumpers)	$426	
738850135	Receiver hitch (for 20" bumper)	$526	
716874000	Install receiver hitch (Add to part number above)		Add $99.25

Grab Handles			
Part Number	**Description**	**List Price**	**Installed List Price**
758025000	Grab handle		$63.75

Paint			
Part Number	**Description**	**List Price**	**Installed List Price**
750631000	(Auto Crane White) Painted on both the outside and inside of the body	$1,974	
716881010	(Auto Crane White) Painted on the outside of the body and Zolatone on the inside of the compartments	$2,374	
716863000	(Auto Crane White) -painted inside compartments only	$713	
716881020	Zolatone - painted inside compartments only	$1,146	
900500000	Custom Paint	$2,768	

Bedliner			
Part Number	**Description**	**List Price**	**Installed List Price**
717510001	Bedliner - Floor and Sides Only	$1,233	
717510003	Bedliner - Floor, Sides and Compartment Tops	$1,507	
717510005	Bedliner - Workbench bumper	$480	
717510006	Arctic Package	$1,150	
717510008	Bedliner - Front of Body	$641	
900506000	Bedliner Repair Kit (8 sq. ft.)	$630	

Titan 16 – 11' Body (84" CA) Accessories

Boom Support			
Part Number	**Description**	**List Price**	**Installed List Price**
715064020	Boom support (3203 & 4004 cranes)	$241	
716858000	Install boom support (Add to part number above)		Add $112

Light Bar (without lights)			
Part Number	**Description**	**List Price**	**Installed List Price**
739317875	Light bar (Titan 16 – LS Standard / RS Tall)		$595

Work Light Options			
Part Number	**Description**	**List Price**	**Installed List Price**
750825000	Floodlight Kit - Round Tractor Lights	$104	
750825001	Floodlight Kit - 50 Watt Trapezoid Lights	$132	
760629004	Work light - 12VDC - Halogen Betts	$211	
475300010	LED Floodlight	$116	
716861000	Install work lights (Add to part number above)		Add $98

Compartment Hook Options			
Part Number	**Description**	**List Price**	**Installed List Price**
750613000	Oxygen / acetylene hook assembly	$35.75	
750614000	J-hook	$16.50	
750807000	Chain hook assembly	$68.75	
753241000	Swivel J-hook	$30.50	

Master Locking Systems			
Part Number	**Description**	**List Price**	**Installed List Price**
715319105	Master lock system stainless/steel – Standard body		$1,050
715319106	Master lock system stainless/steel – RS Tall body		$1,050
715319107	Master lock system stainless/steel – LS Tall body		$1,050
715319108	Master lock system stainless/steel – LS/RS Tall body		$1,050

Fuel & Fuel / DEF Cut-outs			
Part Number	**Description**	**List Price**	**Installed List Price**
715320020	Fuel / DEF filler cut-outs (2 cut-outs)		$275

Titan 16 – 11' Body (84" CA) Accessories

Body Installation Kits			
Part Number	**Description**	**List Price**	**Installed List Price**
560579000	Body installation kit (for Ford F-350, F-450, and F-550 chassis)	$545	
560579100	Body installation kit (for Dodge chassis)	$595	

Body Installation Charge			
Part Number	**Description**	**List Price**	**Installed List Price**
716851000	Install body (Add to body part number if upfit at factory)		$3,074

Crane Installation Charges			
Part Number	**Description**	**List Price**	**Installed List Price**
750678000	Install 2003, 3203, or 4004EH crane (Add to crane part number if upfit at factory)		$444
750679000	Install hydraulic crane (Add to crane part number if upfit at factory)		$860
360870000	Install 5005EH or 6006EH crane (Add to crane part number if upfit at factory)		$1,191

Equipment			
Part Number	**Description**	**List Price**	**Installed List Price**
750831000	ICC safety kit (Complies with FMVH Safety Standard No. 125, Sec. 571.125)	$72.50	
750061000	Fire extinguisher (Complies with FMCS Regs. Sec. 393.95 – classification 2 – A:10-B:C unit)	$132	
750681000	Backup safety alarm		$252

Spring Reinforcement			
Part Number	**Description**	**List Price**	**Installed List Price**
736995000	Spring reinforcement		$1,673

PTO (For Factory Installs Only)			
Part Number	**Description**	**List Price**	**Installed List Price**
736997000	PTO and installation for an automatic transmission		$3,926
736998000	PTO and installation for a manual transmission		$3,020

Titan 16 – 11' Body (84" CA) Accessories

Hydraulic Reservoirs			
Part Number	**Description**	**List Price**	**Installed List Price**
480420100	15-gallon reservoir with return filter, sight gauge, and suction strainer	$382	
751095050	36-gallon bulkhead reservoir to fit inside 50" wide cargo area with return filter and sight gauge	$898	
738498000	23-gallon bulkhead reservoir to fit inside 50" wide cargo area with site gauge and return filter	$823	
340169400	Oil Cooler Kit (for use when oil temperature exceeds 180°, or application prevents install of recommended 2x total GPM tank capacity, or crane and/or compressor is operated in continuous duty applications)	$2,278	

Hydraulic Installation Kits			
Part Number	**Description**	**List Price**	**Installed List Price**
367223100	Hydraulic Hose Kit for Dodge - Tandem Pump	$773	
367223200	Hydraulic Hose Kit for Ford F550 (Must also include the 560588000 and 480613000)	$773	
367223210	Hydraulic Hose Kit for Dodge - Single Pump (Must also include the 560588000 and 480613000)	$773	
560588000	Selector valve assembly	$1,070	
480613000	Din connector w/cord	$51	

Speed Control			
Part Number	**Description**	**List Price**	**Installed List Price**
480533000	Engine start / stop	$93.25	
480535000	Engine start / stop (Includes above part number)		$895
480534000	Auxiliary relay kit	$74.25	
480536000	Auxiliary relay kit (Includes above part number)		$759

Titan 38 – 9’ Body (60” Cab-to-Axle)

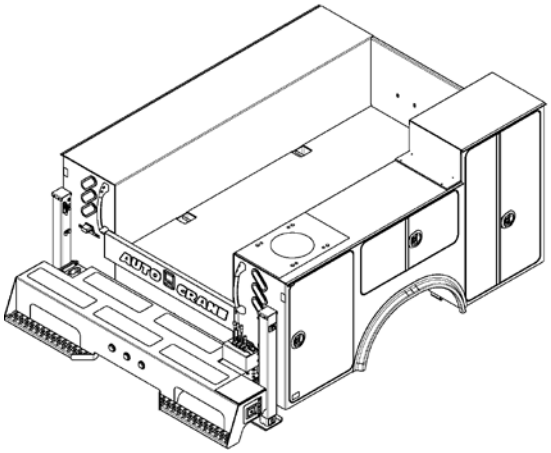

- 11,200 GVWR
- One-piece 10 gauge side-pack design
- 12 gauge treadplate on tops and cargo area
- Three angled oval lights on the rear of the body
- Integral crane reinforcement up to 38,000 ft. lbs.
- Large grab handles
- Fenderette
- Flush door panels with bulb seal gasket
- Three-point latching system
- Rugged, durable interlocking channel frame
- Rounded door corners

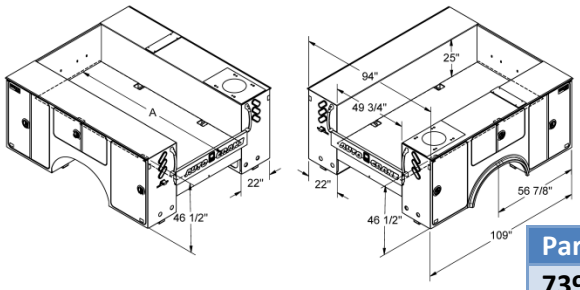

Part Number	Description	List Price
739770001	Titan 38-60CA – Standard – RS Crane	$15,610
739770003	Titan 38-60CA – Standard – LS Crane	$15,610

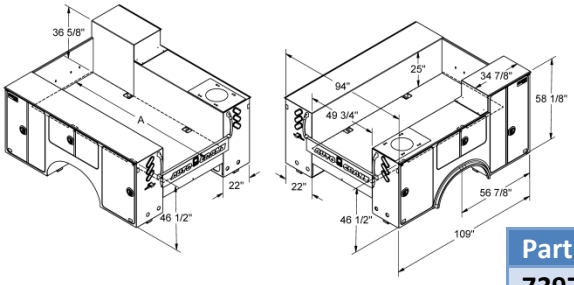

Part Number	Description	List Price
739770002	Titan 38-60CA – RS Tall – RS Crane	$16,227
739770004	Titan 38-60CA – RS Tall – LS Crane	$16,227

Length for “A” Dimension – Standard Bulkhead 107 5/8” – Recessed Bulkhead 99”

Not compatible with the HC-8 crane

14,500 lbs. chassis required for cranes in excess of 25,000 ft. lbs.

Titan 38 – 9' Body (60" CA) Accessories

Bulkheads (Choose one with order)			
Part Number	**Description**	**List Price**	**Installed List Price**
739406051	Standard bulkhead		N/C
739406001	Recessed bulkhead		N/C

Shelving & Slide-Out Trays			
Part Number	**Description**	**List Price**	**Installed List Price**
738830008	Shelving package with 5 adjustable shelves, 1 shelf with parts dividers, 1 shelf with book dividers, 3 material hooks	$798	
716853000	Install shelving package (Add to part number above)		Add $213
738830007	Shelving for front compartment left side or right side - 1 shelf	$178	
738830003	Shelving for horizontal compartment – right side - 1 shelf with tall dividers	$257	
738830004	Shelving for horizontal compartment left side - 1 shelf with short dividers	$249	
738830006	Shelving for rear compartment opposite crane box - 3 shelves	$285	
716868000	Install single shelves (Add to part number above for each shelf)		Add $43.25
738820001	Heavy-duty slide out tray for left side and right side front compartment (500 lb. slides)	$822	
716854000	Install slide-out tray (Add to part number above)		Add $143

Toolboxes			
Part Number	**Description**	**List Price**	**Installed List Price**
739380100	Front compartment – Aluminum Toolbox (1) 7", (2) 5", (5) 3"	$2,010	
760385100	Front compartment (Tall compartment only) – Aluminum Toolbox (2) 7", (2) 5", (5) 3"	$2,299	
739380201	Mid compartment – Aluminum Toolbox (1) 7", (2) 5", (5) 3"	$1,565	
739380204	Mid compartment – Bolt Bin (18 bin)	$1,980	
739380302	Horizontal compartment – Aluminum Toolbox (3) 3"	$995	
739380303	Horizontal compartment – Aluminum Toolbox (4) 3"	$1,210	
739380305	Horizontal compartment – Bolt Bin (15 bin)	$1,641	
739380201	Rear compartment – Aluminum Toolbox (1) 7", (2) 5", (5) 3"	$1,565	
716862000	Install toolbox (Add to part number above for each toolbox)		Add $263

Interior Lighting Options			
Part Number	**Description**	**List Price**	**Installed List Price**
475300111	LED interior compartment lighting	$500	
716869000	Install LED interior lighting (Add to part number above)		Add $475
560271021	Dome light compartment lighting	$235	
716880000	Install dome lights (Add to part number above)		Add $113

Titan 38 – 9' Body (60" CA) Accessories

Oxygen/Acetylene Compartment Options			
Part Number	**Description**	**List Price**	**Installed List Price**
736233000	Three oxygen/acetylene bottle holders with hose holder (for standard or tall compartment)	$450	
560483000	Oxy divider / shelving package for front compartment (fits 58" tall front compartment)	$649	
736372000	Vent hood weldment (fits 21" compartment w/DEF cutout)		$738
716859000	Install bottle holders (Add to part number above)		Add $102
560206000	Drop-well Assembly (2" deep)	$310	
560258000	Drop-well assembly (6" deep)	$350	
716865000	Install drop-well(Add to part number above)		Add $84

Outriggers			
Part Number	**Description**	**List Price**	**Installed List Price**
738893000	Outrigger tube (to be ordered when no outriggers are ordered with the body)		N/C
738896000	Full manual outriggers – Right Side Crane	$1,963	
738897000	Full manual outriggers – Left Side Crane	$1,963	
738843000	Manual in/out, hydraulic up/down outriggers – Right Side Crane	$4,093	
738844000	Manual in/out, hydraulic up/down outriggers – Left Side Crane	$4,093	
738493000	Full hydraulic outriggers – Right Side Crane	$4,454	
738494000	Full hydraulic outriggers – Left Side Crane	$4,454	
716857000	Install outrigger (Add to part number above)		Add $195
725967000	Drop down outrigger, fits Titan 38 front right side (Required for cranes greater than 25,000 ft. lbs. for stability. Mounts to truck frame, NOT body. See note below.)	$1,680	
725966000	Drop down outrigger installed (Includes above part number)		$3,069

Note: Depending on ancillary equipment, Titan 38 bodies on light duty trucks with cranes larger than 25,000 ft. lbs. may require either this leg or be placarded for reduced capacity on the crane side forward or rear outrigger. However, Auto Crane Titan 38 84" CA is fully stable with 38,000 ft.lb. 20 ft. boom crane without the use of the front corner jackleg if used with appropriate outriggers.

Bumpers & Accessories			
Part Number	**Description**	**List Price**	**Installed List Price**
738750000	12" standard duty bumper – Right Side Crane	$887	
738751000	12" standard duty bumper – Left Side Crane	$887	
738752000	20" workbench bumper (storage and vise plate) – Right Side Crane	$1,661	
738753000	20" workbench bumper (storage and vise plate) – Left Side Crane	$1,661	
716856000	Install bumper (Add to part number above)		Add $239
738823000	Reinforced bumper overlay (for 20" bumper) – Right Side Crane		$344
738824000	Reinforced bumper overlay (for 20" bumper) – Left Side Crane		$344
717530000	Wilton 6" Vise	$575	
739167005	Trailer wiring socket – 7 way spade	$25	
716861400	Install trailer plug (Add to part number above)		Add $150

Titan 38 – 9' Body (60" CA) Accessories

Receiver Hitch			
Part Number	**Description**	**List Price**	**Installed List Price**
738860000	Receiver hitch for 12" bumper (Ford chassis)	$426	
738850100	Receiver hitch for 20" bumper (Ford or Dodge chassis)	$650	
716874000	Install receiver hitch (Add to part number above)		Add $99.25

Paint			
Part Number	**Description**	**List Price**	**Installed List Price**
750631000	(Auto Crane White) Painted on both the outside and inside of the body	$1,974	
716881010	(Auto Crane White) Painted on the outside of the body and Zolatone on the inside of the compartments	$2,374	
716863000	(Auto Crane White) -painted inside compartments only	$713	
716881020	Zolatone - painted inside compartments only	$1,146	
900500000	Custom Paint	$2,768	

Bedliner & Rock Guard Options			
Part Number	**Description**	**List Price**	**Installed List Price**
717510001	Bedliner - Floor and Sides Only	$1,233	
717510003	Bedliner - Floor, Sides and Compartment Tops	$1,507	
717510005	Bedliner - Workbench bumper	$480	
717510006	Arctic Package	$1,150	
717510008	Bedliner - Front of Body	$641	
900506000	Bedliner Repair Kit (8 sq. ft.)	$630	
739408011	Rock guard installation, 21" x 21" aluminum diamond plated		$437

Boom Support			
Part Number	**Description**	**List Price**	**Installed List Price**
715064020	Boom support (3203 & 4004 cranes)	$241	
715064010	Boom support (5005 – HC-14 cranes)	$241	
716858000	Install boom support (Add to part number above)		Add $112

Work Light Options			
Part Number	**Description**	**List Price**	**Installed List Price**
750825000	Floodlight Kit - Round Tractor Lights	$104	
750825001	Floodlight Kit - 50 Watt Trapezoid Lights	$132	
760629004	Work light - 12VDC - Halogen Betts	$211	
475300010	LED Floodlight	$116	
716861000	Install work lights (Add to part number above)		Add $98

Titan 38 – 9' Body (60" CA) Accessories

Master Locking Systems			
Part Number	**Description**	**List Price**	**Installed List Price**
738805005	Master lock system stainless/steel – Standard body		$1,050
738805006	Master lock system stainless/steel – RS Tall body		$1,050

Compartment Hook Options			
Part Number	**Description**	**List Price**	**Installed List Price**
750613000	Oxygen / acetylene hook assembly	$35.75	
750614000	J-hook	$16.50	
750807000	Chain hook assembly	$68.75	
753241000	Swivel J-hook	$30.50	

Roll Out Parts Washers			
Part Number	**Description**	**List Price**	**Installed List Price**
560600000	Roll Out Parts Washers (Large) - 18" W x 16" D x 11.5" H (fits in all compartments except crane compartment.)	$2,778	
560601000	Roll Out Parts Washers (Small) - 14" W x 16" D x 8.75" H (fits in crane compartment.)	$2,778	
560599000	Install parts washer (Add to part number above)		Add $214

Salvage System			
Part Number	**Description**	**List Price**	**Installed List Price**
601000008	Salvage system, integrated, single tank, 60 gal	$3,906	

Fuel & Fuel / DEF Cut-outs			
Part Number	**Description**	**List Price**	**Installed List Price**
739188070	Fuel / DEF filler cut-outs (2 cut-outs for Ford)		$275
739188080	Fuel / DEF filler cut-outs (1 cut-out for Dodge)		$150

Body Installation Kits			
Part Number	**Description**	**List Price**	**Installed List Price**
560579000	Body installation kit (for Ford F-350, F-450, and F-550 chassis)	$545	
560579100	Body installation kit (for Dodge chassis)	$595	

Body Installation Charge			
Part Number	**Description**	**List Price**	**Installed List Price**
716851000	Install body (Add to body part number if upfit at factory)		$3,074

Titan 38 – 9' Body (60" CA) Accessories

Crane Installation Charges			
Part Number	**Description**	**List Price**	**Installed List Price**
750678000	Install 2003, 3203, or 4004EH crane (Add to crane part number if upfit at factory)		$444
750679000	Install hydraulic crane (Add to crane part number if upfit at factory)		$860
360870000	Install 5005EH or 6006EH crane (Add to crane part number if upfit at factory)		$1,191

PTO (For Factory Installs Only)			
Part Number	**Description**	**List Price**	**Installed List Price**
736997000	PTO and installation for an automatic transmission		$3,926
736998000	PTO and installation for a manual transmission		$3,020

Spring Reinforcement			
Part Number	**Description**	**List Price**	**Installed List Price**
736995000	Spring reinforcement		$1,673

Equipment			
Part Number	**Description**	**List Price**	**Installed List Price**
750831000	ICC safety kit (Complies with FMVH Safety Standard No. 125, Sec. 571.125)	$72.50	
750061000	Fire extinguisher (Complies with FMCS Regs. Sec. 393.95 – classification 2 – A:10-B:C unit)	$132	
750681000	Backup safety alarm		$252

Hydraulic Reservoirs			
Part Number	**Description**	**List Price**	**Installed List Price**
480420100	15-gallon reservoir with return filter, sight gauge, and suction strainer	$382	
738498000	23-gallon bulkhead reservoir to fit inside 50" wide cargo area with site gauge and return filter	$823	
751095050	36-gallon bulkhead reservoir to fit inside 50" wide cargo area with return filter and sight gauge	$898	
340169400	Oil Cooler Kit (for use when oil temperature exceeds 180°, or application prevents install of recommended 2x total GPM tank capacity, or crane and/or compressor is operated in continuous duty applications)	$2,278	

Titan 38 – 9' Body (60" CA) Accessories

Hydraulic Installation Kits			
Part Number	**Description**	**List Price**	**Installed List Price**
367223100	Hydraulic Hose Kit for Dodge - Tandem Pump	$773	
367223200	Hydraulic Hose Kit for Ford F550 (Must also include the 560588000 and 480613000)	$773	
367223210	Hydraulic Hose Kit for Dodge - Single Pump (Must also include the 560588000 and 480613000)	$773	
560588000	Selector valve assembly	$1,070	
480613000	Din connector w/cord	$51	

Speed Control			
Part Number	**Description**	**List Price**	**Installed List Price**
480533000	Engine start / stop	$93.25	
480535000	Engine start / stop (Includes above part number)		$895
480534000	Auxiliary relay kit	$74.25	
480536000	Auxiliary relay kit (Includes above part number)		$759

Mud Flaps			
Part Number	**Description**	**List Price**	**Installed List Price**
750839001	Mud flaps	$104	
750839000	Mud flaps installed (Includes part number above)		$181

Titan 38 – 11’ Body (84” Cab-to-Axle)

- 11,200 GVWR
- One-piece 10 gauge side-pack design
- 12 gauge treadplate on tops and cargo area
- Three angled oval lights on the rear of the body
- Integral crane reinforcement up to 49,000 ft. lbs.*
- Large grab handles
- Fenderette
- Flush door panels with bulb seal gasket
- Three-point latching system
- Rugged, durable interlocking channel frame
- Rounded door corners

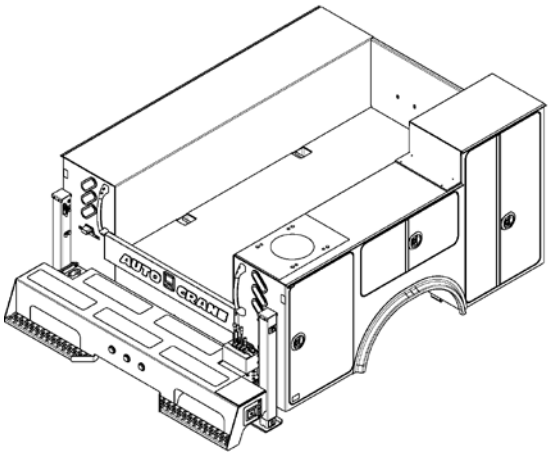

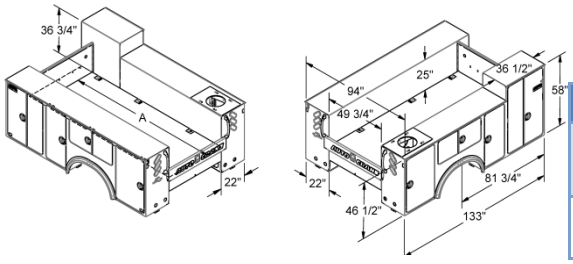

Part Number	Description	List Price
739310011	Titan 38-84CA – RS Tall – RS Crane	$16,841
739310015	Titan 38-84CA – RS Tall – LS Crane	$16,841

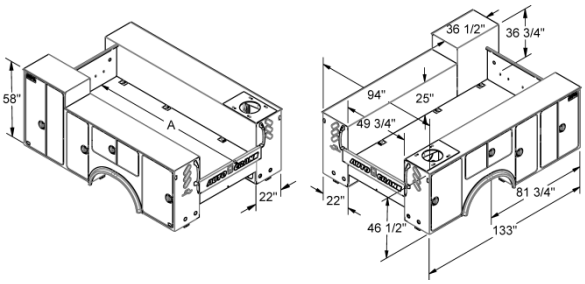

Part Number	Description	List Price
739310012	Titan 38-84CA – LS Tall – RS Crane	$16,841
739310016	Titan 38-84CA – LS Tall – LS Crane	$16,841

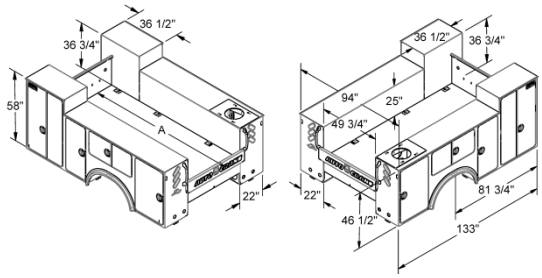

Part Number	Description	List Price
739310013	Titan 38-84CA – LS/RS Tall – RS Crane	$17,891
739310017	Titan 38-84CA – LS/RS Tall – LS Crane	$17,891

Length for “A” Dimension – Standard Bulkhead 131 5/8” – Recessed Bulkhead 123”

14,500 lbs. chassis required for cranes in excess of 25,000 ft. lbs.

* 49,000 ft. lbs. rating in certain zone and when equipped with 738493000 outriggers or equal

Titan 38 – 11’ Body - 84” Cab-to-Axle (Continued)

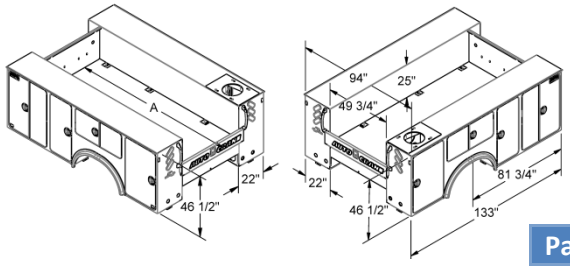

Part Number	Description	List Price
739310014	Titan 38-84CA – Standard – RS Crane	$16,226
739310018	Titan 38-84CA – Standard – LS Crane	$16,226

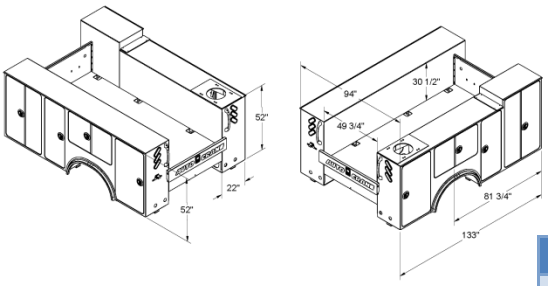

Part Number	Description	List Price
739310023	Titan 38-84CA – 58”/52” Tall Sides – RS Crane	$16,995

Length for “A” Dimension – Standard Bulkhead 131 5/8” – Recessed Bulkhead 123”

14,500 lbs. chassis required for cranes in excess of 25,000 ft. lbs.

* 49,000 ft. lbs. rating in certain zone and when equipped with 738493000 outriggers or equal

Titan 38 – 11' Body (84" CA) Accessories

Bulkheads (Choose one with order)			
Part Number	**Description**	**List Price**	**Installed List Price**
739406051	Standard bulkhead		N/C
739406001	Recessed bulkhead		N/C

Shelving & Slide-Out Trays			
Part Number	**Description**	**List Price**	**Installed List Price**
738830000	Shelving package with 11 adjustable shelves, 1 shelf with parts dividers, 1 shelf with book dividers, 3 material hooks	$1,039	
716853000	Install shelving package (Add to part number above)		Add $213
738830001	Shelving for front compartment left side or right side - 1 shelf	$178	
738830002	Shelving for mid compartment left side or right side – 3 shelves	$261	
738830003	Shelving for horizontal compartment – right side - 1 shelf with tall dividers	$257	
738830004	Shelving for horizontal compartment left side - 1 shelf with short dividers	$249	
738830006	Shelving for rear compartment opposite crane box - 3 shelves	$285	
738830011	Shelving for crane compartment – 1 shelf	$109	
716868000	Install single shelves (Add to part number above for each shelf)		Add $43.25
560238003	Heavy-duty slide out tray for left side and right side front compartment (500 lb. slides)	$822	
716854000	Install slide-out tray (Add to part number above)		Add $143

Toolboxes			
Part Number	**Description**	**List Price**	**Installed List Price**
739380100	Front compartment – Aluminum Toolbox (1) 7", (2) 5", (5) 3"	$2,010	
760385100	Front compartment (Tall compartment only) – Aluminum Toolbox (2) 7", (2) 5", (5) 3"	$2,295	
739380201	Mid compartment – Aluminum Toolbox (1) 7", (2) 5", (5) 3"	$1,565	
739380204	Mid compartment – Bolt Bin (18 bin)	$1,980	
739380302	Horizontal compartment – Aluminum Toolbox (3) 3"	$995	
739380303	Horizontal compartment – Aluminum Toolbox (4) 3"	$1,210	
739380305	Horizontal compartment – Bolt Bin (15 bin)	$1,641	
739380201	Rear compartment – Aluminum Toolbox (1) 7", (2) 5", (5) 3"	$1,565	
716862000	Install toolbox (Add to part number above for each toolbox)		Add $263

Boom Support			
Part Number	**Description**	**List Price**	**Installed List Price**
715064020	Boom support (3203 & 4004 cranes)	$241	
715064010	Boom support (5005 – HC-14 cranes)	$241	
716858000	Install boom support (Add to part number above)		Add $112

Titan 38 – 11' Body (84" CA) Accessories

Oxygen/Acetylene Compartment Options			
Part Number	**Description**	**List Price**	**Installed List Price**
736233000	Three oxygen/acetylene bottle holders with hose holder (for standard or tall compartment)	$450	
560483000	Oxy divider / shelving package for front compartment (fits 58" tall front compartment)	$649	
736372000	Vent hood weldment (fits 21" compartment w/DEF cutout)		$738
560544000	Mid compartment oxygen/acetylene holder (2 bottles)	$170	
736373000	Mid compartment oxy/acet bottle holder (2 bottle, clamp style)	$672	
716859000	Install bottle holders (Add to part number above)		Add $102
560206000	Drop-well Assembly (2" deep)	$310	
560258000	Drop-well assembly (6" deep)	$350	
560446000	Mid compartment drop-well (2" deep)	$280	
716865000	Install drop-well(Add to part number above)		Add $84

Interior Lighting Options			
Part Number	**Description**	**List Price**	**Installed List Price**
475300112	LED interior compartment lighting	$650	
716869000	Install LED interior lighting (Add to part number above)		Add $475
560271001	Dome light compartment lighting	$249	
716880000	Install dome lights (Add to part number above)		Add $113

Outriggers			
Part Number	**Description**	**List Price**	**Installed List Price**
738893000	Outrigger tube (to be ordered when no outriggers are ordered with the body)		N/C
738896000	Full manual outriggers – Right Side Crane	$1,963	
738897000	Full manual outriggers – Left Side Crane	$1,963	
738843000	Manual in/out, hydraulic up/down outriggers – Right Side Crane	$4,093	
738844000	Manual in/out, hydraulic up/down outriggers – Left Side Crane	$4,093	
738493000	Full hydraulic outriggers – Right Side Crane	$4,454	
738494000	Full hydraulic outriggers – Left Side Crane	$4,454	
716857000	Install outrigger (Add to part number above)		Add $195
725967000	Drop down outrigger, fits Titan 38 front right side (required for cranes greater than 25,000 ft. lbs. for stability. Mounts to truck frame, NOT body. See note below.	$1,680	
725966000	Drop down outrigger installed (Includes above part number)		$3,069

Note: Depending on ancillary equipment, Titan 38 bodies on light duty trucks with cranes larger than 25,000 ft. lbs. may require either this leg or be placarded for reduced capacity on the crane side forward or rear outrigger. However, Auto Crane Titan 38 84" CA is fully stable with 38,000 ft.lb. 20 ft. boom crane without the use of the front corner jackleg if used with appropriate outriggers.

Titan 38 – 11’ Body (84” CA) Accessories

Bumpers & Accessories			
Part Number	**Description**	**List Price**	**Installed List Price**
738750000	12” standard duty bumper – Right Side Crane	$887	
738751000	12” standard duty bumper – Left Side Crane	$887	
738752000	20” workbench bumper (storage and vise plate) – Right Side Crane	$1,661	
738753000	20” workbench bumper (storage and vise plate) – Left Side Crane	$1,661	
739179400	24" HD bumper w/large compartment, lights and V Groove – RSC	$3,597	
739175105	24" HD bumper w/large compartment and V Groove, without lights – RSC	$2,795	
716856000	Install bumper (Add to part number above)		Add $239
738823000	Reinforced bumper overlay (for 20” bumper) – Right Side Crane		$344
738824000	Reinforced bumper overlay (for 20” bumper) – Left Side Crane		$344
717530000	Wilton 6” Vise	$575	
739167005	Trailer wiring socket – 7 way spade	$25	
716861400	Install trailer plug (Add to part number above)		Add $150

Receiver Hitch			
Part Number	**Description**	**List Price**	**Installed List Price**
738860000	Receiver hitch for 12” bumper (Ford chassis)	$426	
738850100	Receiver hitch for 20” bumper (Ford or Dodge chassis)	$650	
738850105	Receiver hitch for 24” bumper (Ford or Dodge chassis)	$695	
716874000	Install receiver hitch (Add to part number above)		Add $99.25

Paint			
Part Number	**Description**	**List Price**	**Installed List Price**
750631000	(Auto Crane White) Painted on the outside and inside of the body	$1,974	
716881010	(Auto Crane White) Painted on the outside of the body and Zolatone on the inside of the compartments	$2,374	
716863000	(Auto Crane White) -painted inside compartments only	$713	
716881020	Zolatone - painted inside compartments only	$1,146	
900500000	Custom Paint	$2,768	

Bedliner & Rock Guard Options			
Part Number	**Description**	**List Price**	**Installed List Price**
717510001	Bedliner - Floor and Sides Only	$1,233	
717510003	Bedliner - Floor, Sides and Compartment Tops	$1,507	
717510005	Bedliner - Workbench bumper	$480	
717510006	Arctic Package	$1,150	
717510008	Bedliner - Front of Body	$641	
900506000	Bedliner Repair Kit (8 sq. ft.)	$630	
739408011	Rock guard installation, 21" x 21" aluminum diamond plated		$437

Titan 38 – 11' Body (84" CA) Accessories

Master Locking Systems			
Part Number	**Description**	**List Price**	**Installed List Price**
738695100	Master lock system stainless/steel – RS Tall body		$1,050
738695102	Master lock system stainless/steel – LS/RS Tall body		$1,050
738695100	Master lock system stainless/steel – LS Tall body		$1,050
738695101	Master lock system stainless/steel – Standard body		$1,050
739317951	Master lock system stainless/steel – 58"/52" Tall body		$1,050

Light Bars			
Part Number	**Description**	**List Price**	**Installed List Price**
739226009	Light Bar - Titan 38 - left side standard, right side tall	$790	
739317855	Light Bar - Titan 38 - 58"/52" tall sides	$750	

Work Light Options			
Part Number	**Description**	**List Price**	**Installed List Price**
750825000	Floodlight Kit - Round Tractor Lights	$104	
750825001	Floodlight Kit - 50 Watt Trapezoid Lights	$132	
760629004	Work light - 12VDC - Halogen Betts	$211	
475300010	LED Floodlight	$116	
716861000	Install work lights (Add to part number above)		Add $98

Compartment Hook Options			
Part Number	**Description**	**List Price**	**Installed List Price**
750613000	Oxygen / acetylene hook assembly	$35.75	
750614000	J-hook	$16.50	
750807000	Chain hook assembly	$68.75	
753241000	Swivel J-hook	$30.50	

Salvage System			
Part Number	**Description**	**List Price**	**Installed List Price**
601000008	Salvage system, integrated, single tank, 60 gal	$3,906	

Roll Out Parts Washers			
Part Number	**Description**	**List Price**	**Installed List Price**
560600000	Roll Out Parts Washers (Large) - 18" W x 16" D x 11.5" H (fits in all compartments except crane compartment.)	$2,778	
560601000	Roll Out Parts Washers (Small) - 14" W x 16" D x 8.75" H (fits in crane compartment.)	$2,778	
560599000	Install parts washer (Add to part number above)		Add $214

Titan 38 – 11' Body (84" CA) Accessories

Sliding Tops			
Part Number	**Description**	**List Price**	**Installed List Price**
739165100	Lockable sliding top - Titan 38 - 84" CA (Recessed Bulkhead)	$3,450	
739165200	Lockable sliding top - Titan 38 - 84" CA (Standard Bulkhead)	$4,033	
900504000	Paint sliding top (Auto Crane White)	$700	
900504001	Paint sliding top custom color	$1085	
716884000	Install sliding top (Add to part number above)		Add $750

Fuel & Fuel / DEF Cut-outs			
Part Number	**Description**	**List Price**	**Installed List Price**
739188070	Fuel / DEF filler cut-outs (2 cut-outs for Ford)		$275
739188080	Fuel / DEF filler cut-outs (1 cut-out for Dodge)		$150

Body Installation Kits			
Part Number	**Description**	**List Price**	**Installed List Price**
560579000	Body installation kit (for Ford F-350, F-450, and F-550 chassis)	$545	
560579100	Body installation kit (for Dodge chassis)	$595	

Body Installation Charge			
Part Number	**Description**	**List Price**	**Installed List Price**
716851000	Install body (Add to body part number if upfit at factory)		$3,074

Crane Installation Charges			
Part Number	**Description**	**List Price**	**Installed List Price**
750678000	Install 2003, 3203, or 4004EH crane (Add to crane part number if upfit at factory)		$444
750679000	Install hydraulic crane (Add to crane part number if upfit at factory)		$860
360870000	Install 5005EH or 6006EH crane (Add to crane part number if upfit at factory)		$1,191

PTO (For Factory Installs Only)			
Part Number	**Description**	**List Price**	**Installed List Price**
736997000	PTO and installation for an automatic transmission		$3,926
736998000	PTO and installation for a manual transmission		$3,020

Spring Reinforcement			
Part Number	**Description**	**List Price**	**Installed List Price**
736995000	Spring reinforcement		$1,673

Titan 38 – 11' Body (84" CA) Accessories

Mud Flaps			
Part Number	**Description**	**List Price**	**Installed List Price**
750839001	Mud flaps	$104	
750839000	Mud flaps installed (Includes part number above)		$181

Equipment			
Part Number	**Description**	**List Price**	**Installed List Price**
750831000	ICC safety kit (Complies with FMVH Safety Standard No. 125, Sec. 571.125)	$72.50	
750061000	Fire extinguisher (Complies with FMCS Regs. Sec. 393.95 – classification 2 – A:10-B:C unit)	$132	
750681000	Backup safety alarm		$252

Hydraulic Reservoirs			
Part Number	**Description**	**List Price**	**Installed List Price**
480420100	15-gallon reservoir w/ return filter, sight gauge, and suction strainer	$382	
738498000	23-gallon bulkhead reservoir to fit inside 50" wide cargo area with site gauge and return filter	$823	
751095050	36-gallon bulkhead reservoir to fit inside 50" wide cargo area with return filter and sight gauge	$898	
340169400	Oil Cooler Kit (for use when oil temperature exceeds 180°, or application prevents install of recommended 2x total GPM tank capacity, or crane and/or compressor is operated in continuous duty applications)	$2,278	

Hydraulic Installation Kits			
Part Number	**Description**	**List Price**	**Installed List Price**
367223100	Hydraulic Hose Kit for Dodge - Tandem Pump	$773	
367223200	Hydraulic Hose Kit for Ford F550 (Must also include the 560588000 and 480613000)	$773	
367223210	Hydraulic Hose Kit for Dodge - Single Pump (Must also include the 560588000 and 480613000)	$773	
560588000	Selector valve assembly	$1,070	
480613000	Din connector w/cord	$51	

Speed Control			
Part Number	**Description**	**List Price**	**Installed List Price**
480533000	Engine start / stop	$93.25	
480535000	Engine start / stop (Includes above part number)		$895
480534000	Auxiliary relay kit	$74.25	
480536000	Auxiliary relay kit (Includes above part number)		$759

Propane Body - Titan 38 – 11’ Body (84” Cab-to-Axle)

- 16,000 GVWR
- One-piece 10 gauge side-pack design
- Fenderette
- Flush door panels with bulb seal gasket
- Three-point latching system
- Rounded door corners
- Compartments on short side behind and in front of rear wheel

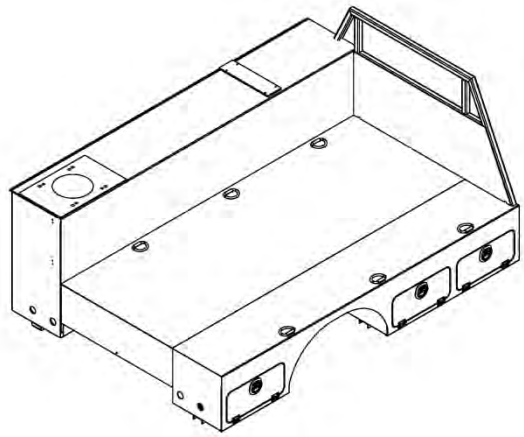

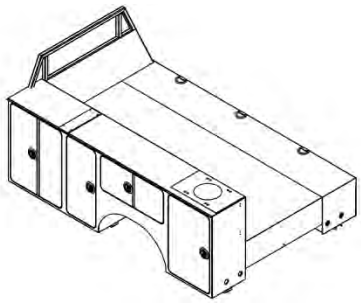

Part Number	Description	List Price
739100000	Propane body – Standard – LSC	$15,965

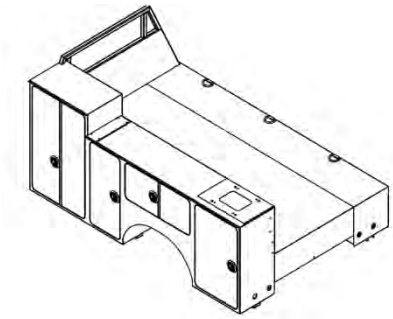

Part Number	Description	List Price
739100001	Propane body – LS Tall – LSC	$15,965

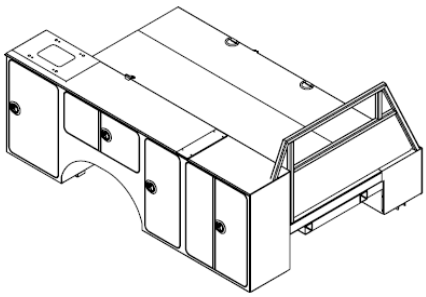

Part Number	Description	List Price
739100002	Propane body – Standard - RSC	$15,965

Propane Body - Titan 38 – 11' Body (84" CA) Accessories

Shelving			
Part Number	**Description**	**List Price**	**Installed List Price**
738830009	Shelving package with 4 adjustable shelves, 1 shelf with dividers, and 3 material hooks	$518	
716878000	Install shelving package (Add to part number above)		Add $107
738830001	Shelving for front compartment left side or right side - 1 shelf	$178	
738830002	Shelving for mid compartment left side or right side – 3 shelves	$261	
738830003	Shelving for horizontal compartment – right side - 1 shelf with tall dividers	$257	
738830004	Shelving for horizontal compartment left side - 1 shelf with short dividers	$249	
716868000	Install single shelves (Add to part number above for each shelf)		Add $43.25

Toolboxes			
Part Number	**Description**	**List Price**	**Installed List Price**
739380100	Front compartment – Aluminum Toolbox (1) 7", (2) 5", (5) 3"	$2,010	
760385100	Front compartment (Tall compartment only) – Aluminum Toolbox (2) 7", (2) 5", (5) 3"	$2,295	
739380201	Mid compartment – Aluminum Toolbox (1) 7", (2) 5", (5) 3"	$1,565	
739380204	Mid compartment – Bolt Bin (18 bin)	$1,980	
739380302	Horizontal compartment – Aluminum Toolbox (3) 3"	$995	
739380303	Horizontal compartment – Aluminum Toolbox (4) 3"	$1,210	
739380305	Horizontal compartment – Bolt Bin (15 bin)	$1,641	
739380201	Rear compartment – Aluminum Toolbox (1) 7", (2) 5", (5) 3"	$1,565	
716862000	Install toolbox (Add to part number above for each toolbox)		Add $263

Oxygen/Acetylene Compartment Options			
Part Number	**Description**	**List Price**	**Installed List Price**
736233000	Three oxygen/acetylene bottle holders with hose holder (for standard or tall compartment)	$450	
560483000	Oxy divider / shelving package for front compartment (fits 58" tall front compartment)	$649	
736372000	Vent hood weldment (fits 21" compartment w/DEF cutout)		$738
560544000	Mid compartment oxygen/acetylene holder (2 bottles)	$170	
736373000	Mid compartment oxy/acet bottle holder (2 bottle, clamp style)	$672	
716859000	Install bottle holders (Add to part number above)		Add $102
560206000	Drop-well Assembly (2" deep)	$310	
560258000	Drop-well assembly (6" deep)	$350	
560446000	Mid compartment drop-well (2" deep)	$280	
716865000	Install drop-well(Add to part number above)		Add $84

Propane Body - Titan 38 – 11' Body (84" CA) Accessories

Interior Lighting Options			
Part Number	**Description**	**List Price**	**Installed List Price**
TBD	LED interior compartment lighting	$	
716879000	Install LED interior lighting (Add to part number above)		Add $178
739102001	Dome light compartment lighting	$159	
716880000	Install dome lights (Add to part number above)		Add $113

Outriggers			
Part Number	**Description**	**List Price**	**Installed List Price**
738896000	Full manual outriggers – Right Side Crane	$1,963	
738897000	Full manual outriggers – Left Side Crane	$1,963	
738484500	Full hydraulic outriggers – Left Side Crane	$4,730	
738484600	Full hydraulic outriggers – Right Side Crane	$4,730	
716857000	Install outriggers (Add to part number above)		Add $195

Boom Support			
Part Number	**Description**	**List Price**	**Installed List Price**
715064020	Boom support (3203 & 4004 cranes)	$241	
715064010	Boom support (5005 – HC-14 cranes)	$241	
716858000	Install boom support (Add to part number above)		Add $112

Bumpers & Accessories			
Part Number	**Description**	**List Price**	**Installed List Price**
TBD	12" standard duty bumper with lights – Right Side Crane	$	
TBD	12" standard duty bumper with lights – Left Side Crane	$	
738870300	20" workbench bumper with tail lights (storage and vise plate) – Right Side Crane	$1,938	
TBD	20" workbench bumper with tail lights (storage and vise plate) – Left Side Crane	$1,938	
716856000	Install bumper (Add to part number above)		Add $239
717530000	Wilton 6" Vise	$575	

Receiver Hitch			
Part Number	**Description**	**List Price**	**Installed List Price**
738860000	Receiver hitch for 12" bumper (Ford chassis)	$426	
738850100	Receiver hitch for 20" bumper (Ford or Dodge chassis)	$650	
716874000	Install receiver hitch (Add to part number above)		Add $99.25

Propane Body - Titan 38 – 11' Body (84" CA) Accessories

Paint			
Part Number	**Description**	**List Price**	**Installed List Price**
750631000	(Auto Crane White) Painted on the outside and inside of the body	$1,974	
716881010	(Auto Crane White) Painted on the outside of the body and Zolatone on the inside of the compartments	$2,374	
716863000	(Auto Crane White) -painted inside compartments only	$713	
716881020	Zolatone - painted inside compartments only	$1,146	
900500000	Custom Paint	$2,768	

Bedliner			
Part Number	**Description**	**List Price**	**Installed List Price**
717510001	Bedliner - Floor and Sides Only	$1,233	
717510003	Bedliner - Floor, Sides and Compartment Tops	$1,507	
717510005	Bedliner - Workbench bumper	$480	
900506000	Bedliner Repair Kit (8 sq. ft.)	$630	

Work Light Options			
Part Number	**Description**	**List Price**	**Installed List Price**
750825000	Floodlight Kit - Round Tractor Lights	$104	
750825001	Floodlight Kit - 50 Watt Trapezoid Lights	$132	
760629004	Work light - 12VDC - Halogen Betts	$211	
475300010	LED Floodlight	$116	
716861000	Install work lights (Add to part number above for each work light)		Add $98

E-Track			
Part Number	**Description**	**List Price**	**Installed List Price**
739098010	E-track – single level (along the inside of the bed)		$454
739098000	E-track – two level (along the inside of the bed)		$590

Pipe Holder			
Part Number	**Description**	**List Price**	**Installed List Price**
739040000	Pipe rack kit	$326	
716875000	Install pipe rack kit (Add to part number above)		Add $107

Master Locking Systems			
Part Number	**Description**	**List Price**	**Installed List Price**
TBD	Master lock system stainless/steel – Standard body - LSC	$	
TBD	Master lock system stainless/steel – LS Tall body – LSC	$	
TBD	Master lock system – Standard body - RSC	$	

Propane Body - Titan 38 – 11' Body (84" CA) Accessories

Compartment Hook Options			
Part Number	**Description**	**List Price**	**Installed List Price**
750613000	Oxygen / acetylene hook assembly	$35.75	
750614000	J-hook	$16.50	
750807000	Chain hook assembly	$68.75	
753241000	Swivel J-hook	$30.50	

Body Installation Kits			
Part Number	**Description**	**List Price**	**Installed List Price**
560579000	Body installation kit (for Ford F-350, F-450, and F-550 chassis)	$545	
560579100	Body installation kit (for Dodge chassis)	$595	

Body Installation Charge			
Part Number	**Description**	**List Price**	**Installed List Price**
716851000	Install body (Add to body part number if upfit at factory)		$3,074

Crane Installation Charges			
Part Number	**Description**	**List Price**	**Installed List Price**
750678000	Install 2003, 3203, or 4004EH crane (Add to crane part number if upfit at factory)		$444
750679000	Install hydraulic crane (Add to crane part number if upfit at factory)		$860
360870000	Install 5005EH or 6006EH crane (Add to crane part number if upfit at factory)		$1,191

Equipment			
Part Number	**Description**	**List Price**	**Installed List Price**
750831000	ICC safety kit (Complies with FMVH Safety Standard No. 125, Sec. 571.125)	$72.50	
750061000	Fire extinguisher (Complies with FMCS Regs. Sec. 393.95 – classification 2 – A:10-B:C unit)	$132	
750681000	Backup safety alarm		$252

Spring Reinforcement			
Part Number	**Description**	**List Price**	**Installed List Price**
736995000	Spring reinforcement		$1,673

Propane Body - Titan 38 – 11' Body (84" CA) Accessories

PTO (For Factory Installs Only)			
Part Number	**Description**	**List Price**	**Installed List Price**
736997000	PTO and installation for an automatic transmission		$3,926
736998000	PTO and installation for a manual transmission		$3,020

Hydraulic Installation Kits			
Part Number	**Description**	**List Price**	**Installed List Price**
367223100	Hydraulic Hose Kit for Dodge - Tandem Pump	$773	
367223200	Hydraulic Hose Kit for Ford F550 (Must also include the 560588000 and 480613000)	$773	
367223210	Hydraulic Hose Kit for Dodge - Single Pump (Must also include the 560588000 and 480613000)	$773	
560588000	Selector valve assembly	$1,070	
480613000	Din connector w/cord	$51	

Hydraulic Reservoirs			
Part Number	**Description**	**List Price**	**Installed List Price**
480420100	15-gallon reservoir with return filter, sight gauge, and suction strainer	$382	
751095050	36-gallon bulkhead reservoir to fit inside 50" wide cargo area with return filter and sight gauge	$898	
738498000	23-gallon bulkhead reservoir to fit inside 50" wide cargo area with site gauge and return filter	$823	
340169400	Oil Cooler Kit (for use when oil temperature exceeds 180°, or application prevents install of recommended 2x total GPM tank capacity, or crane and/or compressor is operated in continuous duty applications)	$2,278	

Speed Control			
Part Number	**Description**	**List Price**	**Installed List Price**
480533000	Engine start / stop	$93.25	
480435000	Engine start / stop (Includes above part number)		$895
480534000	Auxiliary relay kit	$74.25	
480536000	Auxiliary relay kit (Includes above part number)		$759

Mud Flaps			
Part Number	**Description**	**List Price**	**Installed List Price**
750839001	Mud flaps	$104	
750839000	Mud flaps installed (Includes part number above)		$181

Lube Body - Titan 38 – 11’ Body (84” Cab-to-Axle)

- 3 oil tanks (60/30/30)
- 1 salvage tank
- Grease pump
- Air hose reel
- 5 gallon lube bucket box (holds 5 buckets)
- Hoses are 50’ in length
- Headache rack

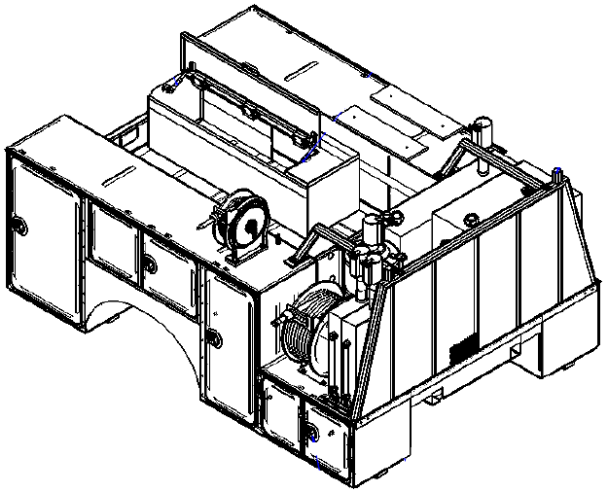

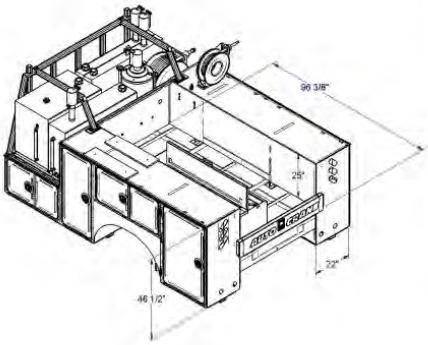

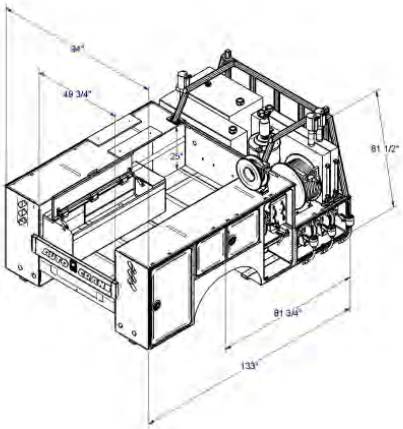

Part Number	Description	List Price
601106000	Titan 38-84CA – Lube Body	$48,439

Lube Body - Titan 38 – 11' Body (84" CA) Accessories

Shelving & Slide-Out Trays			
Part Number	**Description**	**List Price**	**Installed List Price**
738830002	Shelving for mid compartment left side or right side – 3 shelves	$261	
738830003	Shelving for horizontal compartment – right side - 1 shelf with tall dividers	$257	
738830004	Shelving for horizontal compartment left side - 1 shelf with short dividers	$249	
738830006	Shelving for rear compartment opposite crane box - 3 shelves	$285	
716868000	Install single shelves (Add to part number above for each shelf)		Add $43.25

Bumper			
Part Number	**Description**	**List Price**	**Installed List Price**
560460002	24" Workbench Service Bumper	$1,816	
716856000	Install bumper (Add to part number above)		Add $239
717530000	Wilton 6" Vise	$575	

Interior Lighting Options			
Part Number	**Description**	**List Price**	**Installed List Price**
475300112	LED interior compartment lighting	$650	
716869000	Install LED interior lighting (Add to part number above)		Add $475
560271001	Dome light compartment lighting	$249	
716880000	Install dome lights (Add to part number above)		Add $113

Paint			
Part Number	**Description**	**List Price**	**Installed List Price**
750631000	(Auto Crane White) Painted on both the outside and inside of the body	$1,974	
716881010	(Auto Crane White) Painted on the outside of the body and Zolatone on the inside of the compartments	$2,374	
716863000	(Auto Crane White) -painted inside compartments only	$713	
716881020	Zolatone - painted inside compartments only	$1,146	
900500000	Custom Paint	$2,768	

Sliding Top			
Part Number	**Description**	**List Price**	**Installed List Price**
601106400	Sliding Top (96 ½")	$4,000	
900504000	Paint sliding top	$700	
900504001	Paint sliding top custom color	$1085	
716884000	Install sliding top (Add to part number above)		Add $750

Titan 50 – 11’ Body (84” Cab-to-Axle)

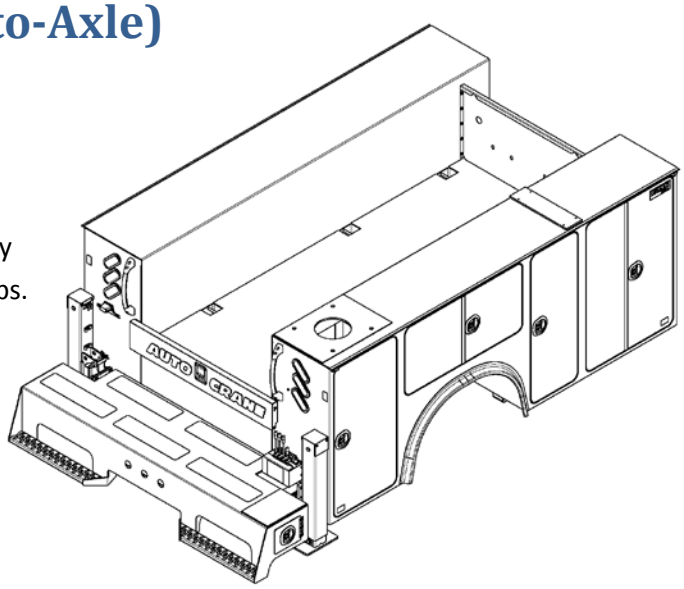

- 20,500 GVWR
- One-piece 10 gauge side-pack design
- 12 gauge treadplate on tops and cargo area
- Three angled oval lights on the rear of the body
- Integral crane reinforcement up to 50,000 ft. lbs.
- Large grab handles
- Fenderette
- Flush door panels with bulb seal gasket
- Three-point latching system
- Rugged, durable interlocking channel frame
- Rounded door corners

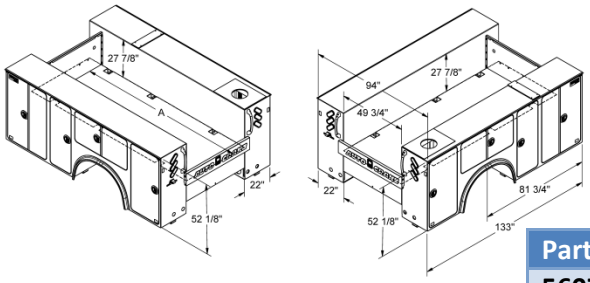

Part Number	Description	List Price
560740001	Titan 50-84CA – 52” Tall – RS Crane	$17,397
560740003	Titan 50-84CA – 52” Tall – LS Crane	$17,397

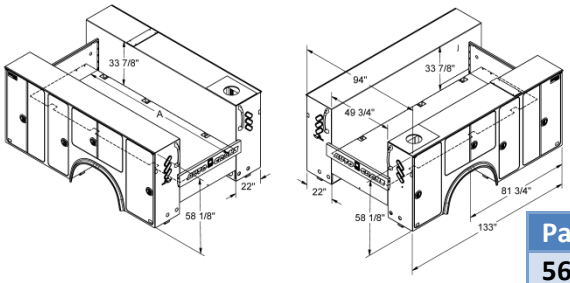

Part Number	Description	List Price
560740002	Titan 50-84CA – 58” Tall – RS Crane	$18,033
560740004	Titan 50-84CA – 58” Tall – LS Crane	$18,033

Length for “A” Dimension – Standard Bulkhead 131 5/8” – Recessed Bulkhead 123”

Titan 50 – 11' Body (84" CA) Accessories

Bulkheads (Choose one with order)			
Part Number	**Description**	**List Price**	**Installed List Price**
739406051	Standard bulkhead		N/C
739406001	Recessed bulkhead		N/C

Shelving & Slide-Out Trays			
Part Number	**Description**	**List Price**	**Installed List Price**
560535000	Shelving package with 11 adjustable shelves, 1 shelf with parts dividers, 1 shelf with book dividers, 3 material hooks	$1,131	
716853000	Install shelving package (Add to part number above)		Add $213
560535001	Shelving for front compartment left side or right side - 1 shelf	$178	
560535002	Shelving for mid compartment left side or right side – 3 shelves	$261	
560535003	Shelving for horizontal compartment – right side - 1 shelf with tall dividers	$257	
560535004	Shelving for horizontal compartment left side - 1 shelf with short dividers	$249	
560535006	Shelving for rear compartment opposite crane box - 3 shelves	$285	
560535007	Shelving for crane compartment – 1 shelf	$109	
716868000	Install single shelves (Add to part number above for each shelf)		Add $43.25
560238002	Heavy-duty slide out tray for left side and right side front compartment (500 lb. slides)	$822	
716854000	Install slide-out tray (Add to part number above)		Add $143

Toolboxes			
Part Number	**Description**	**List Price**	**Installed List Price**
760385100	Front compartment – Aluminum Toolbox (2) 7", (2) 5", (5) 3"	$2,295	
760585200	Mid compartment – Aluminum Toolbox (3) 7", (2) 5", (4) 3"	$2,030	
739380204	Mid compartment – Bolt Bin (18 bin)	$1,980	
760585301	Horizontal compartment – Aluminum Toolbox (3) 3"	$1.050	
760585302	Horizontal compartment – Aluminum Toolbox (4) 3"	$1,275	
760385303	Horizontal compartment – Aluminum Toolbox (5) 3"	$1,505	
739380305	Horizontal compartment – Bolt Bin (15 bin)	$1,641	
760585200	Rear compartment – Aluminum Toolbox (3) 7", (2) 5", (4) 3"	$2,030	
716862000	Install toolbox (Add to part number above for each toolbox)		Add $263

Interior Lighting Options			
Part Number	**Description**	**List Price**	**Installed List Price**
475300112	LED interior compartment lighting	$650	
716869000	Install LED interior lighting (Add to part number above)		Add $475
560271001	Dome light compartment lighting	$249	
716880000	Install dome lights (Add to part number above)		Add $113

Titan 50 – 11' Body (84" CA) Accessories

Oxygen/Acetylene Compartment Options			
Part Number	**Description**	**List Price**	**Installed List Price**
736233000	Three oxygen/acetylene bottle holders with hose holder (for standard or tall compartment)	$450	
560483000	Oxy divider / shelving package for front compartment (fits 58" tall front compartment)	$649	
560544000	Mid compartment oxygen/acetylene holder (2 bottles)	$170	
736373000	Mid compartment oxy/acet bottle holder (2 bottle, clamp style)	$672	
716859000	Install bottle holders (Add to part number above)		Add $102
560206000	Drop-well Assembly (2" deep)	$310	
560258000	Drop-well assembly (6" deep)	$350	
560446000	Mid compartment drop-well (2" deep)	$280	
716865000	Install drop-well(Add to part number above)		Add $84

Outriggers			
Part Number	**Description**	**List Price**	**Installed List Price**
560433001	Outrigger tube (to be ordered when no outriggers are ordered with the body)		N/C
560142000	Full manual outriggers – Right Side Crane	$2,183	
560347000	Full manual outriggers – Left Side Crane	$2,183	
560570100	Full hydraulic outriggers – Right Side Crane	$5,035	
560571100	Full hydraulic outriggers – Left Side Crane	$5,035	
716857000	Install outrigger (Add to part number above)		Add $195

Bumpers & Accessories			
Part Number	**Description**	**List Price**	**Installed List Price**
560460000	24" workbench bumper (vise plate, storage area and integrated step) – Right Side Crane	$1,948	
560461000	24" workbench bumper (vise plate, storage area and integrated step) – Left Side Crane	$1,948	
716856000	Install bumper (Add to part number above)		Add $239
560538000	Reinforced bumper overlay (for 24" bumper)		$534
752311000	Additional vise plate for bumpers (3/8" X 10" X 15")	$44.25	
750509000	Additional vise plate installed (Includes above part number)		$173
717530000	Wilton 6" Vise		
739167005	Trailer wiring socket – 7 way spade	$25	
716861400	Install trailer plug (Add to part number above)		Add $150

Titan 50 – 11' Body (84" CA) Accessories

Receiver Hitch			
Part Number	**Description**	**List Price**	**Installed List Price**
560456000	Receiver hitch for 24" bumper	$426	
716874000	Install receiver hitch (Add to part number above)		Add $99.25

Master Locking Systems			
Part Number	**Description**	**List Price**	**Installed List Price**
560205010	Master lock system stainless/steel		$1,050

Paint			
Part Number	**Description**	**List Price**	**Installed List Price**
750631000	(Auto Crane White) Painted on both the outside and inside of the body	$1,974	
716881010	(Auto Crane White) Painted on the outside of the body and Zolatone on the inside of the compartments	$2,374	
716863000	(Auto Crane White) -painted inside compartments only	$713	
716881020	Zolatone - painted inside compartments only	$1,146	
900500000	Custom Paint	$2,768	

Bedliner & Rock Guard Options			
Part Number	**Description**	**List Price**	**Installed List Price**
717510001	Bedliner - Floor and Sides Only	$1,233	
717510003	Bedliner - Floor, Sides and Compartment Tops	$1,507	
717510005	Bedliner - Workbench bumper	$480	
717510006	Arctic Package	$1,150	
717510008	Bedliner - Front of Body	$641	
900506000	Bedliner Repair Kit (8 sq. ft.)	$630	
739408011	Rock guard installation, 21" x 21" aluminum diamond plated		$437

Boom Support			
Part Number	**Description**	**List Price**	**Installed List Price**
715064010	Boom support (5005 – HC-14 cranes)	$241	
716858000	Install boom support (Add to part number above)		Add $112

Hand Rail Option			
Part Number	**Description**	**List Price**	**Installed List Price**
560545100	Hand rail (from rear of body to bumper)	$325	

Titan 50 – 11’ Body (84” CA) Accessories

Light Bars			
Part Number	**Description**	**List Price**	**Installed List Price**
739317845	Light bar (Titan 50 - 58” tall)	$850	

Work Light Options			
Part Number	**Description**	**List Price**	**Installed List Price**
750825000	Floodlight Kit - Round Tractor Lights	$104	
750825001	Floodlight Kit - 50 Watt Trapezoid Lights	$132	
760629004	Work light - 12VDC - Halogen Betts	$211	
475300010	LED Floodlight	$116	
716861000	Install work lights (Add to part number above)		Add $98

Compartment Hook Options			
Part Number	**Description**	**List Price**	**Installed List Price**
750613000	Oxygen / acetylene hook assembly	$35.75	
750614000	J-hook	$16.50	
750807000	Chain hook assembly	$68.75	
753241000	Swivel J-hook	$30.50	

Roll Out Parts Washers			
Part Number	**Description**	**List Price**	**Installed List Price**
560600000	Roll Out Parts Washers (Large) - 18" W x 16" D x 11.5" H (fits in all compartments except crane compartment.)	$2,778	
560601000	Roll Out Parts Washers (Small) - 14" W x 16" D x 8.75" H (fits in crane compartment.)	$2,778	
560599000	Install parts washer (Add to part number above)		Add $214

Salvage System			
Part Number	**Description**	**List Price**	**Installed List Price**
601000008	Salvage system, integrated, single tank, 60 gal	$3,906	

Sliding Tops			
Part Number	**Description**	**List Price**	**Installed List Price**
560595100	Lockable sliding top - Titan 50 - 52" Tall (Recessed Bulkhead)	$4,044	
560596100	Lockable sliding top - Titan 50 - 58" Tall (Recessed Bulkhead)	$4,044	
900504000	Paint sliding top (Auto Crane White)	$700	
900504001	Paint sliding top custom color	$1085	
716884000	Install sliding top (Add to part number above)		Add $750

Titan 50 – 11' Body (84" CA) Accessories

Mud Flaps			
Part Number	**Description**	**List Price**	**Installed List Price**
750839001	Mud flaps	$104	
750839000	Mud flaps installed (Includes part number above)		$181

Body Installation Kits			
Part Number	**Description**	**List Price**	**Installed List Price**
560580000	Body installation kit	$150	

Body Installation Charge			
Part Number	**Description**	**List Price**	**Installed List Price**
716851000	Install body (Add to body part number if upfit at factory)		$3,074

Crane Installation Charges			
Part Number	**Description**	**List Price**	**Installed List Price**
750678000	Install 2003, 3203, or 4004EH crane (Add to crane part number if upfit at factory)		$444
750679000	Install hydraulic crane (Add to crane part number if upfit at factory)		$860
360870000	Install 5005EH or 6006EH crane (Add to crane part number if upfit at factory)		$1,191

PTO (For Factory Installs Only)			
Part Number	**Description**	**List Price**	**Installed List Price**
736997000	PTO and installation for an automatic transmission		$3,926
736998000	PTO and installation for a manual transmission		$3,020

Spring Reinforcement			
Part Number	**Description**	**List Price**	**Installed List Price**
736995000	Spring reinforcement		$1,673

Equipment			
Part Number	**Description**	**List Price**	**Installed List Price**
750831000	ICC safety kit (Complies with FMVH Safety Standard No. 125, Sec. 571.125)	$72.50	
750061000	Fire extinguisher (Complies with FMCS Regs. Sec. 393.95 – classification 2 – A:10-B:C unit)	$132	
750681000	Backup safety alarm		$252

Titan 50 – 11' Body (84" CA) Accessories

Hydraulic Installation Kits			
Part Number	**Description**	**List Price**	**Installed List Price**
738489000	Hydraulics installed to operate hydraulic crane, hydraulic outriggers, and air compressor.	$940	
560485000	Hydraulics installed for (8406H crane, *AC40*, 36 gal. reservoir and outriggers)	$940	

Hydraulic Reservoirs			
Part Number	**Description**	**List Price**	**Installed List Price**
480420100	15-gallon reservoir with return filter, sight gauge, and suction strainer	$382	
738498000	23-gallon bulkhead reservoir to fit inside 50" wide cargo area with site gauge and return filter	$823	
751095050	36-gallon bulkhead reservoir to fit inside 50" wide cargo area with return filter and sight gauge	$898	
340169400	Oil Cooler Kit (for use when oil temperature exceeds 180°, or application prevents install of recommended 2x total GPM tank capacity, or crane and/or compressor is operated in continuous duty applications)	$2,278	

Speed Control			
Part Number	**Description**	**List Price**	**Installed List Price**
717535000	Relay Box Assembly	$675	
717515000	Power Switch Control Panel Assembly	$498	
717514000	Stand for Control Panel (include with above part number if mounting in cab of chassis)	$295	

Titan 50 – 14’ Body (120” Cab-to-Axle)

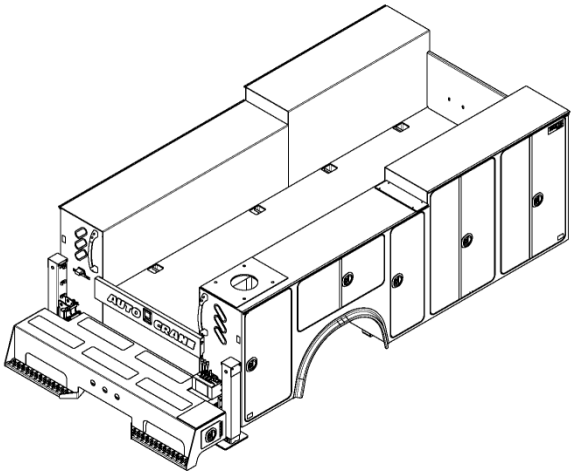

- 20,500 GVWR
- One-piece 10 gauge side-pack design
- 12 gauge treadplate on tops and cargo area
- Three angled oval lights on the rear of the body
- Integral crane reinforcement up to 50,000 ft. lbs.
- Large grab handles
- Fenderette
- Flush door panels with bulb seal gasket
- Three-point latching system
- Rugged, durable interlocking channel frame
- Rounded door corners

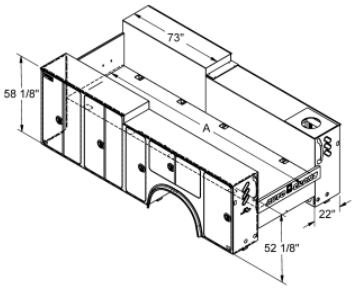

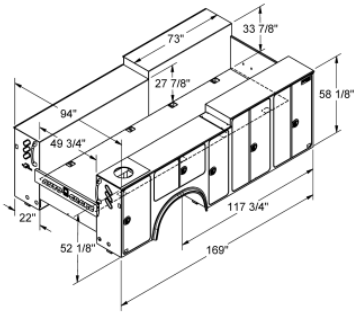

Part Number	Description	List Price
560750001	Titan 50-120CA – RS Crane	$23,021
560750002	Titan 50-120CA – LS Crane	$23,021

Length for “A” Dimension – Standard Bulkhead 167 5/8” – Recessed Bulkhead 159”

Titan 50 – 14' Body (120" CA) Accessories

Bulkheads (Choose one with order)			
Part Number	**Description**	**List Price**	**Installed List Price**
739406051	Standard bulkhead		N/C
739406001	Recessed bulkhead		N/C

Shelving			
Part Number	**Description**	**List Price**	**Installed List Price**
760537000	Shelving package with 13 adjustable shelves, 1 shelf with parts dividers, 1 shelf with book dividers, 3 material hooks	$1,418	
716853000	Install shelving package (Add to part number above)		Add $213
560535001	Shelving for front compartment left side or right side - 1 shelf	$178	
560535002	Shelving for mid compartment left side or right side – 3 shelves	$261	
560535003	Shelving for horizontal compartment – right side - 1 shelf with tall dividers	$257	
560535004	Shelving for horizontal compartment left side - 1 shelf with short dividers	$249	
560535006	Shelving for rear compartment opposite crane box - 3 shelves	$285	
716868000	Install single shelves (Add to part number above for each shelf)		Add $43.25

Toolboxes			
Part Number	**Description**	**List Price**	**Installed List Price**
760385100	Front compartment – Aluminum Toolbox (2) 7", (2) 5", (5) 3"	$2,295	
760585200	Mid compartment – Aluminum Toolbox (3) 7", (2) 5", (4) 3"	$2,030	
739380204	Mid compartment – Bolt Bin (18 bin)	$1,980	
760585301	Horizontal compartment – Aluminum Toolbox (3) 3"	$1.050	
760585302	Horizontal compartment – Aluminum Toolbox (4) 3"	$1,275	
760385303	Horizontal compartment – Aluminum Toolbox (5) 3"	$1,505	
739380305	Horizontal compartment – Bolt Bin (15 bin)	$1,641	
760585200	Rear compartment – Aluminum Toolbox (3) 7", (2) 5", (4) 3"	$2,030	
716862000	Install toolbox (Add to part number above for each toolbox)		Add $263

Interior Lighting Options			
Part Number	**Description**	**List Price**	**Installed List Price**
475300113	LED interior compartment lighting	$800	
716869000	Install LED interior lighting (Add to part number above)		Add $475
560271011	Dome light compartment lighting	$374	
716880000	Install dome lights (Add to part number above)		Add $113

Titan 50 – 14' Body (120" CA) Accessories

Oxygen/Acetylene Compartment Options			
Part Number	**Description**	**List Price**	**Installed List Price**
736233000	Three oxygen/acetylene bottle holders with hose holder (for standard or tall compartment)	$450	
560483000	Oxy divider / shelving package for front compartment (fits 58" tall front compartment)	$649	
560544000	Mid compartment oxygen/acetylene holder (2 bottles)	$170	
736373000	Mid compartment oxy/acet bottle holder (2 bottle, clamp style)	$672	
716859000	Install bottle holders (Add to part number above)		Add $102
560206000	Drop-well Assembly (2" deep)	$310	
560258000	Drop-well assembly (6" deep)	$350	
560446000	Mid compartment drop-well (2" deep)	$280	
716865000	Install drop-well(Add to part number above)		Add $84

Outriggers			
Part Number	**Description**	**List Price**	**Installed List Price**
560433001	Outrigger tube (to be ordered when no outriggers are ordered with the body)		N/C
560142000	Full manual outriggers – Right Side Crane	$2,183	
560347000	Full manual outriggers – Left Side Crane	$2,183	
560570100	Full hydraulic outriggers – Right Side Crane	$5,035	
560571100	Full hydraulic outriggers – Left Side Crane	$5,035	
716857000	Install outrigger (Add to part number above)		Add $195

Bumpers & Accessories			
Part Number	**Description**	**List Price**	**Installed List Price**
560460000	24" workbench bumper (vise plate, storage area and integrated step) – Right Side Crane	$1,948	
560461000	24" workbench bumper (vise plate, storage area and integrated step) – Left Side Crane	$1,948	
716856000	Install bumper (Add to part number above)		Add $239
560538000	Reinforced bumper overlay (for 24" bumper)		$534
752311000	Additional vise plate for bumpers (3/8" X 10" X 15")	$44.25	
750509000	Additional vise plate installed (Includes above part number)		$173
717530000	Wilton 6" Vise	$575	
739167005	Trailer wiring socket – 7 way spade	$25	
716861400	Install trailer plug (Add to part number above)		Add $150

Titan 50 – 14' Body (120" CA) Accessories

Receiver Hitch			
Part Number	**Description**	**List Price**	**Installed List Price**
560456000	Receiver hitch for 24" bumper	$426	
716874000	Install receiver hitch (Add to part number above)		Add $99.25

Hand Rail Option			
Part Number	**Description**	**List Price**	**Installed List Price**
560545100	Hand rail (from rear of body to bumper)	$325	

Boom Support			
Part Number	**Description**	**List Price**	**Installed List Price**
715064010	Boom support (5005 – HC-14 cranes)	$241	
716858000	Install boom support (Add to part number above)		Add $112

Paint			
Part Number	**Description**	**List Price**	**Installed List Price**
716881000	(Auto Crane White) Painted on both the outside and inside of the body	$2,279	
716881030	(Auto Crane White) Painted on the outside of the body and Zolatone on the inside of the compartments	$2,779	
716863000	(Auto Crane White) -painted inside compartments only	$713	
716881040	Zolatone - painted inside compartments only	$1,213	
900502000	Custom Paint	$3,405	

Bedliner & Rock Guard Options			
Part Number	**Description**	**List Price**	**Installed List Price**
717510002	Bedliner - Floor and Sides Only	$1,369	
717510004	Bedliner - Floor, Sides and Compartment Tops	$1,644	
717510005	Bedliner - Workbench bumper	$480	
717510007	Arctic Package	$1,250	
717510008	Bedliner - Front of Body	$641	
900506000	Bedliner Repair Kit (8 sq. ft.)	$630	
739408011	Rock guard installation, 21" x 21" aluminum diamond plated		$437

Master Locking Systems			
Part Number	**Description**	**List Price**	**Installed List Price**
760570000	Master lock system stainless/steel	$825	
716864000	Install master lock (Add to part number above)		Add $475

Titan 50 – 14’ Body (120” CA) Accessories

Compartment Hook Options			
Part Number	**Description**	**List Price**	**Installed List Price**
750613000	Oxygen / acetylene hook assembly	$35.75	
750614000	J-hook	$16.50	
750807000	Chain hook assembly	$68.75	
753241000	Swivel J-hook	$30.50	

Light Bars			
Part Number	**Description**	**List Price**	**Installed List Price**
739317845	Light bar (Titan 50 - 58” tall)	$850	

Work Light Options			
Part Number	**Description**	**List Price**	**Installed List Price**
750825000	Floodlight Kit - Round Tractor Lights	$104	
750825001	Floodlight Kit - 50 Watt Trapezoid Lights	$132	
760629004	Work light - 12VDC - Halogen Betts	$211	
475300010	LED Floodlight	$116	
716861000	Install work lights (Add to part number above)		Add $98

Roll Out Parts Washers			
Part Number	**Description**	**List Price**	**Installed List Price**
560600000	Roll Out Parts Washers (Large) - 18" W x 16" D x 11.5" H (fits in all compartments except crane compartment.)	$2,778	
560601000	Roll Out Parts Washers (Small) - 14" W x 16" D x 8.75" H (fits in crane compartment.)	$2,778	
560599000	Install parts washer (Add to part number above)		Add $214

Salvage System			
Part Number	**Description**	**List Price**	**Installed List Price**
601000008	Salvage system, integrated, single tank, 60 gal	$3,906	

Sliding Tops			
Part Number	**Description**	**List Price**	**Installed List Price**
560597000	Lockable sliding top - Titan 50 - 120" CA (Recessed Bulkhead)	$3,750	
900504000	Paint sliding top (Auto Crane White)	$700	
900504001	Paint sliding top custom color	$1085	
716884000	Install sliding top (Add to part number above)		Add $750

Titan 50 – 14' Body (120" CA) Accessories

Mud Flaps			
Part Number	**Description**	**List Price**	**Installed List Price**
750839001	Mud flaps	$104	
750839000	Mud flaps installed (Includes part number above)		$181

Body Installation Kits			
Part Number	**Description**	**List Price**	**Installed List Price**
560580000	Body installation kit	$150	

Body Installation Charge			
Part Number	**Description**	**List Price**	**Installed List Price**
716851000	Install body (Add to body part number if upfit at factory)		$3,074

Crane Installation Charges			
Part Number	**Description**	**List Price**	**Installed List Price**
750678000	Install 2003, 3203, or 4004EH crane (Add to crane part number if upfit at factory)		$444
750679000	Install hydraulic crane (Add to crane part number if upfit at factory)		$860
360870000	Install 5005EH or 6006EH crane (Add to crane part number if upfit at factory)		$1,191

PTO (For Factory Installs Only)			
Part Number	**Description**	**List Price**	**Installed List Price**
736997000	PTO and installation for an automatic transmission		$3,926
736998000	PTO and installation for a manual transmission		$3,020

Spring Reinforcement			
Part Number	**Description**	**List Price**	**Installed List Price**
736995000	Spring reinforcement		$1,673

Equipment			
Part Number	**Description**	**List Price**	**Installed List Price**
750831000	ICC safety kit (Complies with FMVH Safety Standard No. 125, Sec. 571.125)	$72.50	
750061000	Fire extinguisher (Complies with FMCS Regs. Sec. 393.95 – classification 2 – A:10-B:C unit)	$132	
750681000	Backup safety alarm		$252

Titan 50 – 14' Body (120" CA) Accessories

Hydraulic Installation Kits			
Part Number	**Description**	**List Price**	**Installed List Price**
738489000	Hydraulics installed to operate hydraulic crane, hydraulic outriggers, and air compressor.	$940	
560485000	Hydraulics installed for (8406H crane, *AC40*, 36 gal. reservoir and outriggers)	$940	

Hydraulic Reservoirs			
Part Number	**Description**	**List Price**	**Installed List Price**
480420100	15-gallon reservoir with return filter, sight gauge, and suction strainer	$382	
738498000	23-gallon bulkhead reservoir to fit inside 50" wide cargo area with site gauge and return filter	$823	
751095050	36-gallon bulkhead reservoir to fit inside 50" wide cargo area with return filter and sight gauge	$898	
340169400	Oil Cooler Kit (for use when oil temperature exceeds 180°, or application prevents install of recommended 2x total GPM tank capacity, or crane and/or compressor is operated in continuous duty applications)	$2,278	

Speed Control			
Part Number	**Description**	**List Price**	**Installed List Price**
717535000	Relay Box Assembly	$675	
717515000	Power Switch Control Panel Assembly	$498	
717514000	Stand for Control Panel (include with above part number if mounting in cab of chassis)	$295	

Titan 60 – 11’ Body (84” Cab-to-Axle)

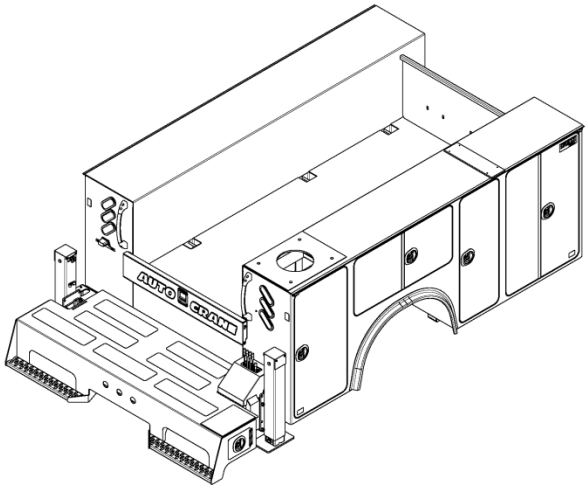

- 26,000 GVWR
- One-piece 10 gauge side-pack design
- 12 gauge treadplate on tops and cargo area
- Three angled oval lights on the rear of the body
- Integral crane reinforcement up to 60,000 ft. lbs.
- Large grab handles
- Fenderette
- Flush door panels with bulb seal gasket
- Three-point latching system
- Rugged, durable interlocking channel frame
- Rounded door corners

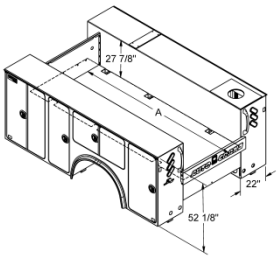

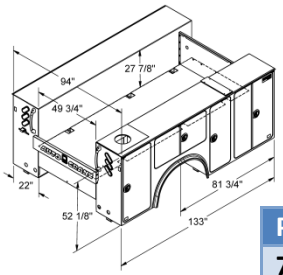

Part Number	Description	List Price
760710101	Titan 60-84CA – 52” Tall – RS Crane	$18,033
760710103	Titan 60-84CA – 52” Tall – LS Crane	$18,033

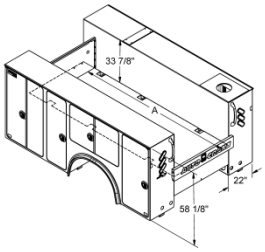

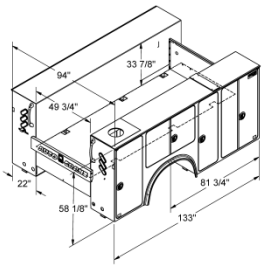

Part Number	Description	List Price
760710102	Titan 60-84CA – 58” Tall – RS Crane	$18,667
760710104	Titan 60-84CA – 58” Tall – LS Crane	$18,667

Length for “A” Dimension – Standard Bulkhead 131 5/8” – Recessed Bulkhead 123”

Titan 60 – 11' Body (84" CA) Accessories

Bulkheads (Choose one with order)			
Part Number	**Description**	**List Price**	**Installed List Price**
739406051	Standard bulkhead		N/C
739406001	Recessed bulkhead		N/C

Shelving & Slide-Out Trays			
Part Number	**Description**	**List Price**	**Installed List Price**
560535000	Shelving package with 11 adjustable shelves, 1 shelf with parts dividers, 1 shelf with book dividers, 3 material hooks	$1,131	
716853000	Install shelving package (Add to part number above)		Add $213
560535001	Shelving for front compartment left side or right side - 1 shelf	$178	
560535002	Shelving for mid compartment left side or right side – 3 shelves	$261	
560535003	Shelving for horizontal compartment – right side - 1 shelf with tall dividers	$257	
560535004	Shelving for horizontal compartment left side - 1 shelf with short dividers	$249	
560535006	Shelving for rear compartment opposite crane box - 3 shelves	$285	
560535007	Shelving for crane compartment – 1 shelf	$109	
716868000	Install single shelves (Add to part number above for each shelf)		Add $43.25
560238002	Heavy-duty slide out tray for left side and right side front compartment (500 lb. slides)	$822	
716854000	Install slide-out tray (Add to part number above)		Add $143

Toolboxes			
Part Number	**Description**	**List Price**	**Installed List Price**
760385100	Front compartment – Aluminum Toolbox (2) 7", (2) 5", (5) 3"	$2,295	
760585200	Mid compartment – Aluminum Toolbox (3) 7", (2) 5", (4) 3"	$2,030	
739380204	Mid compartment – Bolt Bin (18 bin)	$1,980	
760585301	Horizontal compartment – Aluminum Toolbox (3) 3"	$1.050	
760585302	Horizontal compartment – Aluminum Toolbox (4) 3"	$1,275	
760385303	Horizontal compartment – Aluminum Toolbox (5) 3"	$1,505	
739380305	Horizontal compartment – Bolt Bin (15 bin)	$1,641	
760585200	Rear compartment – Aluminum Toolbox (3) 7", (2) 5", (4) 3"	$2,030	
716862000	Install toolbox (Add to part number above for each toolbox)		Add $263

Interior Lighting Options			
Part Number	**Description**	**List Price**	**Installed List Price**
475300112	LED interior compartment lighting	$650	
716869000	Install LED interior lighting (Add to part number above)		Add $475
560271001	Dome light compartment lighting	$249	
716880000	Install dome lights (Add to part number above)		Add $113

Titan 60 – 11' Body (84" CA) Accessories

Oxygen/Acetylene Compartment Options			
Part Number	**Description**	**List Price**	**Installed List Price**
736233000	Three oxygen/acetylene bottle holders with hose holder (for standard or tall compartment)	$450	
560483000	Oxy divider / shelving package for front compartment (fits 58" tall front compartment)	$649	
560544000	Mid compartment oxygen/acetylene holder (2 bottles)	$170	
736373000	Mid compartment oxy/acet bottle holder (2 bottle, clamp style)	$672	
716859000	Install bottle holders (Add to part number above)		Add $102
560206000	Drop-well Assembly (2" deep)	$310	
560258000	Drop-well assembly (6" deep)	$350	
560446000	Mid compartment drop-well (2" deep)	$280	
716865000	Install drop-well(Add to part number above)		Add $84

Outriggers			
Part Number	**Description**	**List Price**	**Installed List Price**
760431000	Full manual outriggers – Right Side Crane	$4,263	
772020000	Full hydraulic outriggers – Right Side Crane	$7,163	
772021000	Full hydraulic outriggers – Left Side Crane	$7,163	
716857000	Install outrigger (Add to part number above)		Add $195

Bumpers & Accessories			
Part Number	**Description**	**List Price**	**Installed List Price**
772059000	30" workbench bumper (vise plate, storage area and integrated step) – Right Side Crane	$1,921	
772063000	30" workbench bumper (vise plate, storage area and integrated step) – Left Side Crane	$1,921	
772080000	30" workbench bumper for manual outriggers only (vise plate, storage area and integrated step) – Right Side Crane	$1,921	
716856000	Install bumper (Add to part number above)		Add $239
772083000	Reinforced bumper overlay (for 30" bumper – 772059000 & 772063000)		$649
760391000	Reinforced bumper overlay (for 30" bumper - 772080000)		$649
752311000	Additional vise plate for bumpers (3/8" X 10" X 15")	$44.25	
750509000	Additional vise plate installed (Includes above part number)		$173
717530000	Wilton 6" Vise	$575	
739167005	Trailer wiring socket – 7 way spade	$25	
716861400	Install trailer plug (Add to part number above)		Add $150

Titan 60 – 11' Body (84" CA) Accessories

Receiver Hitch			
Part Number	**Description**	**List Price**	**Installed List Price**
760365000	Receiver hitch for 30" bumper	$426	
716874000	Install receiver hitch (Add to part number above)		Add $99.25

Boom Support			
Part Number	**Description**	**List Price**	**Installed List Price**
715064010	Boom support (5005 – HC-14 cranes)	$241	
716858000	Install boom support (Add to part number above)		Add $112

Master Locking Systems			
Part Number	**Description**	**List Price**	**Installed List Price**
560205010	Master lock system stainless/steel		$1,050

Paint			
Part Number	**Description**	**List Price**	**Installed List Price**
750631000	(Auto Crane White) Painted on both the outside and inside of the body	$1,974	
716881010	(Auto Crane White) Painted on the outside of the body and Zolatone on the inside of the compartments	$2,374	
716863000	(Auto Crane White) -painted inside compartments only	$713	
716881020	Zolatone - painted inside compartments only	$1,146	
900500000	Custom Paint	$2,768	

Bedliner & Rock Guard Options			
Part Number	**Description**	**List Price**	**Installed List Price**
717510001	Bedliner - Floor and Sides Only	$1,233	
717510003	Bedliner - Floor, Sides and Compartment Tops	$1,507	
717510005	Bedliner - Workbench bumper	$480	
717510006	Arctic Package	$1,150	
717510008	Bedliner - Front of Body	$641	
900506000	Bedliner Repair Kit (8 sq. ft.)	$630	
739408011	Rock guard installation, 21" x 21" aluminum diamond plated		$437

Light Bars			
Part Number	**Description**	**List Price**	**Installed List Price**
739317845	Light bar (Titan 60 - 58" tall) – Ford chassis	$850	
739317865	Light bar (Titan 60 - 58" tall) – Peterbilt chassis	$850	

Titan 60 – 11' Body (84" CA) Accessories

Work Light Options			
Part Number	**Description**	**List Price**	**Installed List Price**
750825000	Floodlight Kit - Round Tractor Lights	$104	
750825001	Floodlight Kit - 50 Watt Trapezoid Lights	$132	
760629004	Work light - 12VDC - Halogen Betts	$211	
475300010	LED Floodlight	$116	
716861000	Install work lights (Add to part number above)		Add $98

Hand Rail Option			
Part Number	**Description**	**List Price**	**Installed List Price**
560545100	Hand rail (from rear of body to bumper)	$325	

Compartment Hook Options			
Part Number	**Description**	**List Price**	**Installed List Price**
750613000	Oxygen / acetylene hook assembly	$35.75	
750614000	J-hook	$16.50	
750807000	Chain hook assembly	$68.75	
753241000	Swivel J-hook	$30.50	

Roll Out Parts Washers			
Part Number	**Description**	**List Price**	**Installed List Price**
560600000	Roll Out Parts Washers (Large) - 18" W x 16" D x 11.5" H (fits in all compartments except crane compartment.)	$2,778	
560601000	Roll Out Parts Washers (Small) - 14" W x 16" D x 8.75" H (fits in crane compartment.)	$2,778	
560599000	Install parts washer (Add to part number above)		Add $214

Salvage System			
Part Number	**Description**	**List Price**	**Installed List Price**
601000008	Salvage system, integrated, single tank, 60 gal	$3,906	

Sliding Tops			
Part Number	**Description**	**List Price**	**Installed List Price**
560595100	Lockable sliding top - Titan 60 - 52" Tall (Recessed Bulkhead)	$4,044	
560596100	Lockable sliding top - Titan 60 - 58" Tall (Recessed Bulkhead)	$4,044	
900504000	Paint sliding top (Auto Crane White)	$700	
900504001	Paint sliding top custom color	$1085	
716884000	Install sliding top (Add to part number above)		Add $750

Titan 60 – 11' Body (84" CA) Accessories

Mud Flaps			
Part Number	**Description**	**List Price**	**Installed List Price**
750839001	Mud flaps	$104	
750839000	Mud flaps installed (Includes part number above)		$181

Body Installation Kits			
Part Number	**Description**	**List Price**	**Installed List Price**
560581000	Body installation kit	$150	

Body Installation Charge			
Part Number	**Description**	**List Price**	**Installed List Price**
716851000	Install body (Add to body part number if upfit at factory)		$3,074

Crane Installation Charges			
Part Number	**Description**	**List Price**	**Installed List Price**
750678000	Install 2003, 3203, or 4004EH crane (Add to crane part number if upfit at factory)		$444
750679000	Install hydraulic crane (Add to crane part number if upfit at factory)		$860
360870000	Install 5005EH or 6006EH crane (Add to crane part number if upfit at factory)		$1,191

PTO (For Factory Installs Only)			
Part Number	**Description**	**List Price**	**Installed List Price**
736997000	PTO and installation for an automatic transmission		$3,926
736998000	PTO and installation for a manual transmission		$3,020

Spring Reinforcement			
Part Number	**Description**	**List Price**	**Installed List Price**
736995000	Spring reinforcement		$1,673

Equipment			
Part Number	**Description**	**List Price**	**Installed List Price**
750831000	ICC safety kit (Complies with FMVH Safety Standard No. 125, Sec. 571.125)	$72.50	
750061000	Fire extinguisher (Complies with FMCS Regs. Sec. 393.95 – classification 2 – A:10-B:C unit)	$132	
750681000	Backup safety alarm		$252

Titan 60 – 11' Body (84" CA) Accessories

Hydraulic Installation Kits			
Part Number	**Description**	**List Price**	**Installed List Price**
738489000	Hydraulics installed to operate hydraulic crane, hydraulic outriggers, and air compressor.	$940	
760485000	Hydraulics installed (Titan 60, hydraulic crane, hydraulic outriggers, and air compressor.)	$1095	

Hydraulic Reservoirs			
Part Number	**Description**	**List Price**	**Installed List Price**
480420100	15-gallon reservoir with return filter, sight gauge, and suction strainer	$382	
738498000	23-gallon bulkhead reservoir to fit inside 50" wide cargo area with site gauge and return filter	$823	
751095050	36-gallon bulkhead reservoir to fit inside 50" wide cargo area with return filter and sight gauge	$898	
340169400	Oil Cooler Kit (for use when oil temperature exceeds 180°, or application prevents install of recommended 2x total GPM tank capacity, or crane and/or compressor is operated in continuous duty applications)	$2,278	

Speed Control			
Part Number	**Description**	**List Price**	**Installed List Price**
717535000	Relay Box Assembly	$675	
717515000	Power Switch Control Panel Assembly	$498	
717514000	Stand for Control Panel (include with above part number if mounting in cab of chassis)	$295	

Titan 60 – 14’ Body (120” Cab-to-Axle)

- 33,000 GVWR
- One-piece 10 gauge side-pack design
- 12 gauge treadplate on tops and cargo area
- Three angled oval lights on the rear of the body
- Integral crane reinforcement up to 60,000 ft. lbs.
- Large grab handles
- Fenderette
- Flush door panels with bulb seal gasket
- Three-point latching system
- Rugged, durable interlocking channel frame
- Rounded door corners

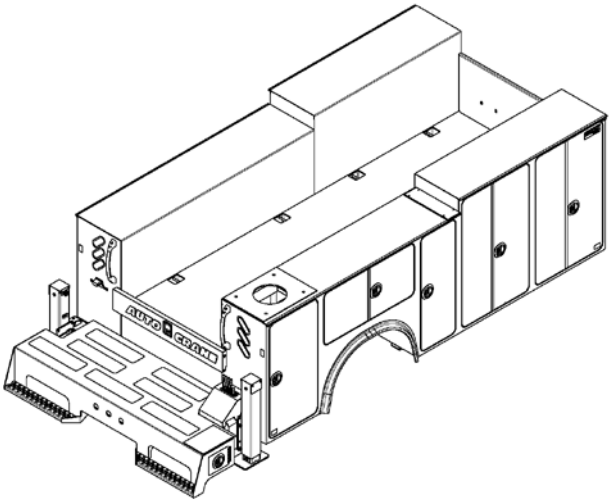

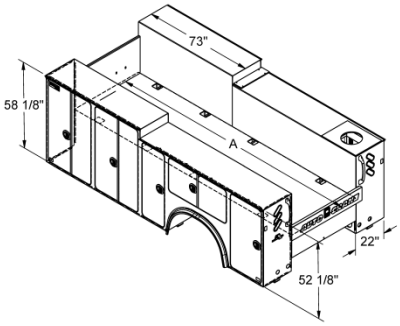

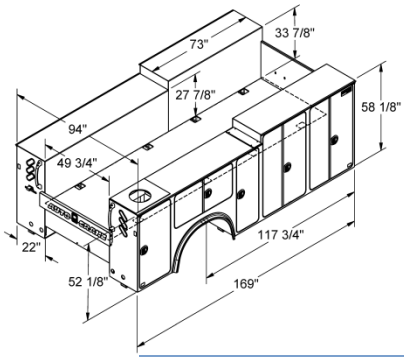

Part Number	Description	List Price
760720001	Titan 60-120CA – RS Crane	$23,740
760720002	Titan 60-120CA – LS Crane	$23,740

Length for “A” Dimension – Standard Bulkhead 167 5/8” – Recessed Bulkhead 159”

Titan 60 – 14' Body (120" CA) Accessories

Bulkheads (Choose one with order)			
Part Number	**Description**	**List Price**	**Installed List Price**
739406051	Standard bulkhead		N/C
739406001	Recessed bulkhead		N/C

Shelving & Slide-Out Trays			
Part Number	**Description**	**List Price**	**Installed List Price**
760537000	Shelving package with 13 adjustable shelves, 1 shelf with parts dividers, 1 shelf with book dividers, 3 material hooks	$1,418	
716853000	Install shelving package (Add to part number above)		Add $213
560535001	Shelving for front compartment left side or right side - 1 shelf	$178	
560535002	Shelving for mid compartment left side or right side – 3 shelves	$261	
560535003	Shelving for horizontal compartment – right side - 1 shelf with tall dividers	$257	
560535004	Shelving for horizontal compartment left side - 1 shelf with short dividers	$249	
560535006	Shelving for rear compartment opposite crane box - 3 shelves	$285	
716868000	Install single shelves (Add to part number above for each shelf)		Add $43.25

Toolboxes			
Part Number	**Description**	**List Price**	**Installed List Price**
760385100	Front compartment – Aluminum Toolbox (2) 7", (2) 5", (5) 3"	$2,295	
760585200	Mid compartment – Aluminum Toolbox (3) 7", (2) 5", (4) 3"	$2,030	
739380204	Mid compartment – Bolt Bin (18 bin)	$1,980	
760585301	Horizontal compartment – Aluminum Toolbox (3) 3"	$1.050	
760585302	Horizontal compartment – Aluminum Toolbox (4) 3"	$1,275	
760385303	Horizontal compartment – Aluminum Toolbox (5) 3"	$1,505	
739380305	Horizontal compartment – Bolt Bin (15 bin)	$1,641	
760585200	Rear compartment – Aluminum Toolbox (3) 7", (2) 5", (4) 3"	$2,030	
716862000	Install toolbox (Add to part number above for each toolbox)		Add $263

Interior Lighting Options			
Part Number	**Description**	**List Price**	**Installed List Price**
475300113	LED interior compartment lighting	$800	
716869000	Install LED interior lighting (Add to part number above)		Add $475
560271011	Dome light compartment lighting	$374	
716880000	Install dome lights (Add to part number above)		Add $113

Titan 60 – 14' Body (120" CA) Accessories

Oxygen/Acetylene Compartment Options			
Part Number	**Description**	**List Price**	**Installed List Price**
736233000	Three oxygen/acetylene bottle holders with hose holder (for standard or tall compartment)	$450	
560483000	Oxy divider / shelving package for front compartment (fits 58" tall front compartment)	$649	
560544000	Mid compartment oxygen/acetylene holder (2 bottles)	$170	
736373000	Mid compartment oxy/acet bottle holder (2 bottle, clamp style)	$672	
716859000	Install bottle holders (Add to part number above)		Add $102
560206000	Drop-well Assembly (2" deep)	$310	
560258000	Drop-well assembly (6" deep)	$350	
560446000	Mid compartment drop-well (2" deep)	$280	
716865000	Install drop-well (Add to part number above)		Add $84

Outriggers			
Part Number	**Description**	**List Price**	**Installed List Price**
760431000	Full manual outriggers – Right Side Crane	$4,263	
772020000	Full hydraulic outriggers – Right Side Crane	$7,163	
772021000	Full hydraulic outriggers – Left Side Crane	$7,163	
716857000	Install outrigger (Add to part number above)		Add $195

Bumpers & Accessories			
Part Number	**Description**	**List Price**	**Installed List Price**
772059000	30" workbench bumper (vise plate, storage area and integrated step) – Right Side Crane	$1,921	
772063000	30" workbench bumper (vise plate, storage area and integrated step) – Left Side Crane	$1,921	
772080000	30" workbench bumper for manual outriggers only (vise plate, storage area and integrated step) – Right Side Crane	$1,921	
716856000	Install bumper (Add to part number above)		Add $239
772083000	Reinforced bumper overlay (for 30" bumper – 772059000 & 772063000)		$649
760391000	Reinforced bumper overlay (for 30" bumper - 772080000)		$649
752311000	Additional vise plate for bumpers (3/8" X 10" X 15")	$44.25	
750509000	Additional vise plate installed (Includes above part number)		$173
717530000	Wilton 6" Vise	$575	
739167005	Trailer wiring socket – 7 way spade	$25	
716861400	Install trailer plug (Add to part number above)		Add $150

Titan 60 – 14' Body (120" CA) Accessories

Receiver Hitch			
Part Number	**Description**	**List Price**	**Installed List Price**
760365000	Receiver hitch for 30" bumper	$426	
716874000	Install receiver hitch (Add to part number above)		Add $99.25

Boom Support			
Part Number	**Description**	**List Price**	**Installed List Price**
715064010	Boom support (5005 – HC-14 cranes)	$	
716858000	Install boom support (Add to part number above)		Add $112

Paint			
Part Number	**Description**	**List Price**	**Installed List Price**
716881000	(Auto Crane White) Painted on both the outside and inside of the body	$2,279	
716881030	(Auto Crane White) Painted on the outside of the body and Zolatone on the inside of the compartments	$2,779	
716863000	(Auto Crane White) -painted inside compartments only	$713	
716881040	Zolatone - painted inside compartments only	$1,213	
900502000	Custom Paint	$3,405	

Bedliner & Rock Guard Options			
Part Number	**Description**	**List Price**	**Installed List Price**
717510002	Bedliner - Floor and Sides Only	$1,369	
717510004	Bedliner - Floor, Sides and Compartment Tops	$1,644	
717510005	Bedliner - Workbench bumper	$480	
717510007	Arctic Package	$1,250	
717510008	Bedliner - Front of Body	$641	
900506000	Bedliner Repair Kit (8 sq. ft.)	$630	
739408011	Rock guard installation, 21" x 21" aluminum diamond plated		$437

Master Locking Systems			
Part Number	**Description**	**List Price**	**Installed List Price**
760551005	Master lock system stainless/steel	$825	
716864000	Install master lock (Add to part number above)		Add $475

Hand Rail Option			
Part Number	**Description**	**List Price**	**Installed List Price**
560545100	Hand rail (from rear of body to bumper)	$325	

Titan 60 – 14’ Body (120” CA) Accessories

Light Bars			
Part Number	**Description**	**List Price**	**Installed List Price**
739317845	Light bar (Titan 60 - 58” tall) – Ford chassis	$850	
739317865	Light bar (Titan 60 - 58” tall) – Peterbilt chassis	$850	

Work Light Options			
Part Number	**Description**	**List Price**	**Installed List Price**
750825000	Floodlight Kit - Round Tractor Lights	$104	
750825001	Floodlight Kit - 50 Watt Trapezoid Lights	$132	
760629004	Work light - 12VDC - Halogen Betts	$211	
475300010	LED Floodlight	$116	
716861000	Install work lights (Add to part number above)		Add $98

Compartment Hook Options			
Part Number	**Description**	**List Price**	**Installed List Price**
750613000	Oxygen / acetylene hook assembly	$35.75	
750614000	J-hook	$16.50	
750807000	Chain hook assembly	$68.75	
753241000	Swivel J-hook	$30.50	

Roll Out Parts Washers			
Part Number	**Description**	**List Price**	**Installed List Price**
560600000	Roll Out Parts Washers (Large) - 18" W x 16" D x 11.5" H (fits in all compartments except crane compartment.)	$2,778	
560601000	Roll Out Parts Washers (Small) - 14" W x 16" D x 8.75" H (fits in crane compartment.)	$2,778	
560599000	Install parts washer (Add to part number above)		Add $214

Salvage System			
Part Number	**Description**	**List Price**	**Installed List Price**
601000008	Salvage system, integrated, single tank, 60 gal	$3,906	

Sliding Tops			
Part Number	**Description**	**List Price**	**Installed List Price**
560597000	Lockable sliding top - Titan 60 - 120" CA (Recessed Bulkhead)	$3,750	
900504000	Paint sliding top (Auto Crane White)	$700	
900504001	Paint sliding top custom color	$1085	
716884000	Install sliding top (Add to part number above)		Add $750

Titan 60 – 14' Body (120" CA) Accessories

Body Installation Kits			
Part Number	**Description**	**List Price**	**Installed List Price**
560580000	Body installation kit	$150	

Body Installation Charge			
Part Number	**Description**	**List Price**	**Installed List Price**
716851000	Install body (Add to body part number if upfit at factory)		$3,074

Crane Installation Charges			
Part Number	**Description**	**List Price**	**Installed List Price**
750678000	Install 2003, 3203, or 4004EH crane (Add to crane part number if upfit at factory)		$444
750679000	Install hydraulic crane (Add to crane part number if upfit at factory)		$860
360870000	Install 5005EH or 6006EH crane (Add to crane part number if upfit at factory)		$1,191

PTO (For Factory Installs Only)			
Part Number	**Description**	**List Price**	**Installed List Price**
736997000	PTO and installation for an automatic transmission		$3,926
736998000	PTO and installation for a manual transmission		$3,020

Spring Reinforcement			
Part Number	**Description**	**List Price**	**Installed List Price**
736995000	Spring reinforcement		$1,673

Equipment			
Part Number	**Description**	**List Price**	**Installed List Price**
750831000	ICC safety kit (Complies with FMVH Safety Standard No. 125, Sec. 571.125)	$72.50	
750061000	Fire extinguisher (Complies with FMCS Regs. Sec. 393.95 – classification 2 – A:10-B:C unit)	$132	
750681000	Backup safety alarm		$252

Hydraulic Installation Kits			
Part Number	**Description**	**List Price**	**Installed List Price**
760485001	Hydraulics installed to operate hydraulic crane, hydraulic outriggers, and air compressor.	$1,157	

Titan 60 – 14' Body (120" CA) Accessories

Hydraulic Reservoirs			
Part Number	**Description**	**List Price**	**Installed List Price**
480420100	15-gallon reservoir with return filter, sight gauge, and suction strainer	$382	
738498000	23-gallon bulkhead reservoir to fit inside 50" wide cargo area with site gauge and return filter	$823	
751095050	36-gallon bulkhead reservoir to fit inside 50" wide cargo area with return filter and sight gauge	$898	
340169400	Oil Cooler Kit (for use when oil temperature exceeds 180°, or application prevents install of recommended 2x total GPM tank capacity, or crane and/or compressor is operated in continuous duty applications)	$2,278	

Speed Control			
Part Number	**Description**	**List Price**	**Installed List Price**
717535000	Relay Box Assembly	$675	
717515000	Power Switch Control Panel Assembly	$498	
717514000	Stand for Control Panel (include with above part number if mounting in cab of chassis)	$295	

Mud Flaps			
Part Number	**Description**	**List Price**	**Installed List Price**
750839001	Mud flaps	$104	
750839000	Mud flaps installed (Includes part number above)		$181

Titan 85 – 14’ Body (120” Cab-to-Axle)

- 33,000 GVWR
- One-piece 10 gauge side-pack design
- 12 gauge treadplate on tops and cargo area
- Three angled oval lights on the rear of the body
- Integral crane reinforcement up to 60,000 ft. lbs.
- Large grab handles
- Fenderette
- Flush door panels with bulb seal gasket
- Three-point latching system
- Rugged, durable interlocking channel frame
- Rounded door corners

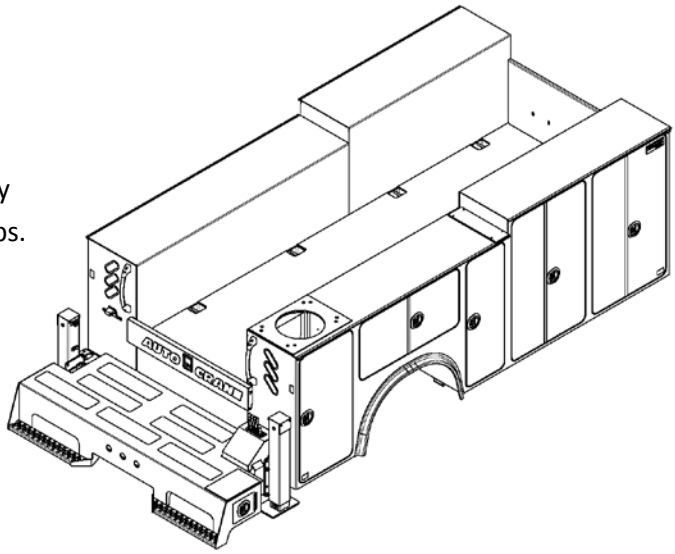

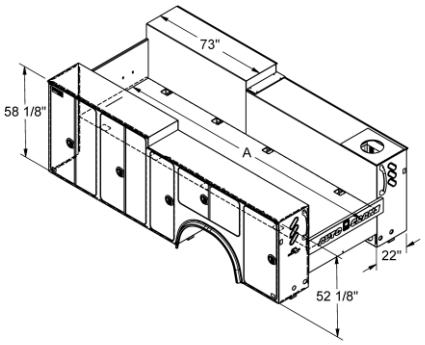

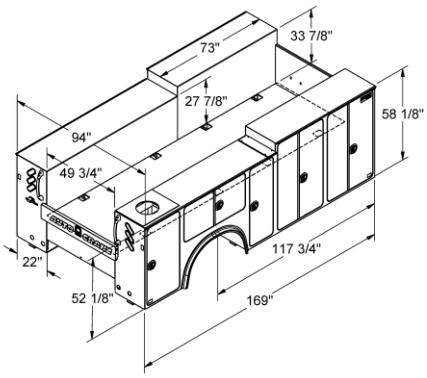

Part Number	Description	List Price
772000206	Titan 85-120CA – RS Crane	$24,734

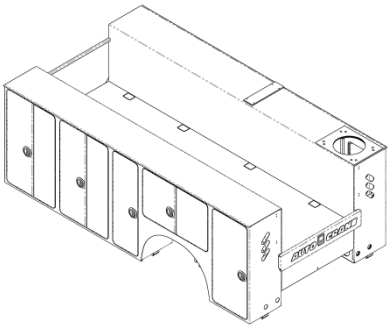

Part Number	Description	List Price
772000207	Titan 85-120CA –All Compartments 58” Tall – RS Crane	$25,149

Length for “A” Dimension – Standard Bulkhead 167 5/8” – Recessed Bulkhead 159”

Titan 85 – 14' Body (120" CA) Accessories

Bulkheads (Choose one with order)			
Part Number	**Description**	**List Price**	**Installed List Price**
739406051	Standard bulkhead		N/C
739406001	Recessed bulkhead		N/C

Shelving & Slide-Out Trays			
Part Number	**Description**	**List Price**	**Installed List Price**
760537000	Shelving package with 13 adjustable shelves, 1 shelf with parts dividers, 1 shelf with book dividers, 3 material hooks	$1,418	
716853000	Install shelving package (Add to part number above)		Add $213
560535001	Shelving for front compartment left side or right side - 1 shelf	$178	
560535002	Shelving for mid compartment left side or right side – 3 shelves	$261	
560535003	Shelving for horizontal compartment – right side - 1 shelf with tall dividers	$257	
560535004	Shelving for horizontal compartment left side - 1 shelf with short dividers	$249	
560535006	Shelving for rear compartment opposite crane box - 3 shelves	$285	
716868000	Install single shelves (Add to part number above for each shelf)		Add $43.25

Toolboxes			
Part Number	**Description**	**List Price**	**Installed List Price**
760385100	Front compartment – Aluminum Toolbox (2) 7", (2) 5", (5) 3"	$2,295	
760585200	Mid compartment – Aluminum Toolbox (3) 7", (2) 5", (4) 3"	$2,030	
739380204	Mid compartment – Bolt Bin (18 bin)	$1,980	
760585301	Horizontal compartment – Aluminum Toolbox (3) 3"	$1.050	
760585302	Horizontal compartment – Aluminum Toolbox (4) 3"	$1,275	
760385303	Horizontal compartment – Aluminum Toolbox (5) 3"	$1,505	
739380305	Horizontal compartment – Bolt Bin (15 bin)	$1,641	
760585200	Rear compartment – Aluminum Toolbox (3) 7", (2) 5", (4) 3"	$2,030	
716862000	Install toolbox (Add to part number above for each toolbox)		Add $263

Interior Lighting Options			
Part Number	**Description**	**List Price**	**Installed List Price**
475300113	LED interior compartment lighting	$800	
716869000	Install LED interior lighting (Add to part number above)		Add $475
560271011	Dome light compartment lighting	$374	
716880000	Install dome lights (Add to part number above)		Add $113

Titan 85 – 14' Body (120" CA) Accessories

Oxygen/Acetylene Compartment Options			
Part Number	**Description**	**List Price**	**Installed List Price**
736233000	Three oxygen/acetylene bottle holders with hose holder (for standard or tall compartment)	$450	
560483000	Oxy divider / shelving package for front compartment (fits 58" tall front compartment)	$649	
560544000	Mid compartment oxygen/acetylene holder (2 bottles)	$170	
736373000	Mid compartment oxy/acet bottle holder (2 bottle, clamp style)	$672	
716859000	Install bottle holders (Add to part number above)		Add $102
560206000	Drop-well Assembly (2" deep)	$310	
560258000	Drop-well assembly (6" deep)	$350	
560446000	Mid compartment drop-well (2" deep)	$280	
716865000	Install drop-well (Add to part number above)		Add $84

Outriggers			
Part Number	**Description**	**List Price**	**Installed List Price**
772020001	Full hydraulic outriggers – Right Side Crane	$7,163	
716857000	Install outrigger (Add to part number above)		Add $195

Bumpers & Accessories			
Part Number	**Description**	**List Price**	**Installed List Price**
772059000	30" workbench bumper (vise plate, storage area and integrated step) – Right Side Crane	$1,921	
772063000	30" workbench bumper (vise plate, storage area and integrated step) – Left Side Crane	$1,921	
772059300	30" workbench bumper with lights (vise plate, storage area and integrated step) – Right Side Crane	$2,360	
716856000	Install bumper (Add to part number above)		Add $239
772083000	Reinforced bumper overlay (for 30" bumper – 772059000 & 772063000)		$649
752311000	Additional vise plate for bumpers (3/8" X 10" X 15")	$44.25	
750509000	Additional vise plate installed (Includes above part number)		$173
717530000	Wilton 6" Vise	$575	
739167005	Trailer wiring socket – 7 way spade	$25	
716861400	Install trailer plug (Add to part number above)		Add $150

Receiver Hitch			
Part Number	**Description**	**List Price**	**Installed List Price**
760365000	Receiver hitch for 30" bumper	$426	
716874000	Install receiver hitch (Add to part number above)		Add $99.25

Titan 85 – 14' Body (120" CA) Accessories

Master Locking Systems			
Part Number	**Description**	**List Price**	**Installed List Price**
760551005	Master lock system stainless/steel	$825	
760570000	Master lock system stainless/steel – 58" full height	$825	
716864000	Install master lock (Add to part number above)		Add $475

Boom Support			
Part Number	**Description**	**List Price**	**Installed List Price**
715064010	Boom support (5005 – HC-14 cranes)	$241	
716858000	Install boom support (Add to part number above)		Add $112

Paint			
Part Number	**Description**	**List Price**	**Installed List Price**
716881000	(Auto Crane White) Painted on the outside and inside of the body	$2,279	
716881030	(Auto Crane White) Painted on the outside of the body and Zolatone on the inside of the compartments	$2,779	
716863000	(Auto Crane White) -painted inside compartments only	$713	
716881040	Zolatone - painted inside compartments only	$1,213	
900502000	Custom Paint	$3,405	

Bedliner & Rock Guard Options			
Part Number	**Description**	**List Price**	**Installed List Price**
717510002	Bedliner - Floor and Sides Only	$1,369	
717510004	Bedliner - Floor, Sides and Compartment Tops	$1,644	
717510005	Bedliner - Workbench bumper	$480	
717510007	Arctic Package	$1,250	
717510008	Bedliner - Front of Body	$641	
900506000	Bedliner Repair Kit (8 sq. ft.)	$630	
739408011	Rock guard installation, 21" x 21" aluminum diamond plated		$437

Hand Rail Option			
Part Number	**Description**	**List Price**	**Installed List Price**
560545100	Hand rail (from rear of body to bumper)	$325	

Light Bars			
Part Number	**Description**	**List Price**	**Installed List Price**
739317845	Light bar (Titan 60 - 58" tall) – Ford chassis	$850	
739317865	Light bar (Titan 60 - 58" tall) – Peterbilt chassis	$850	

Titan 85 – 14' Body (120" CA) Accessories

Work Light Options			
Part Number	**Description**	**List Price**	**Installed List Price**
750825000	Floodlight Kit - Round Tractor Lights	$104	
750825001	Floodlight Kit - 50 Watt Trapezoid Lights	$132	
760629004	Work light - 12VDC - Halogen Betts	$211	
475300010	LED Floodlight	$116	
716861000	Install work lights (Add to part number above)		Add $98

Compartment Hook Options			
Part Number	**Description**	**List Price**	**Installed List Price**
750613000	Oxygen / acetylene hook assembly	$35.75	
750614000	J-hook	$16.50	
750807000	Chain hook assembly	$68.75	
753241000	Swivel J-hook	$30.50	

Roll Out Parts Washers			
Part Number	**Description**	**List Price**	**Installed List Price**
560600000	Roll Out Parts Washers (Large) - 18" W x 16" D x 11.5" H (fits in all compartments except crane compartment.)	$2,778	
560601000	Roll Out Parts Washers (Small) - 14" W x 16" D x 8.75" H (fits in crane compartment.)	$2,778	
560599000	Install parts washer (Add to part number above)		Add $214

Salvage System			
Part Number	**Description**	**List Price**	**Installed List Price**
601000008	Salvage system, integrated, single tank, 60 gal	$3,906	

Sliding Tops			
Part Number	**Description**	**List Price**	**Installed List Price**
560597000	Lockable sliding top - Titan 70 - 120" CA (Recessed Bulkhead)	$3,750	
900504000	Paint sliding top (Auto Crane White)	$700	
900504001	Paint sliding top custom color	$1085	
716884000	Install sliding top (Add to part number above)		Add $750

Mud Flaps			
Part Number	**Description**	**List Price**	**Installed List Price**
750839001	Mud flaps	$104	
750839000	Mud flaps installed (Includes part number above)		$181

Titan 85 – 14' Body (120" CA) Accessories

Body Installation Kits			
Part Number	**Description**	**List Price**	**Installed List Price**
560580000	Body installation kit	$150	

Body Installation Charge			
Part Number	**Description**	**List Price**	**Installed List Price**
716851000	Install body (Add to body part number if upfit at factory)		$3,074

Crane Installation Charges			
Part Number	**Description**	**List Price**	**Installed List Price**
750678000	Install 2003, 3203, or 4004EH crane (Add to crane part number if upfit at factory)		$444
750679000	Install hydraulic crane (Add to crane part number if upfit at factory)		$860
360870000	Install 5005EH or 6006EH crane (Add to crane part number if upfit at factory)		$1,191

PTO (For Factory Installs Only)			
Part Number	**Description**	**List Price**	**Installed List Price**
736997000	PTO and installation for an automatic transmission		$3,926
736998000	PTO and installation for a manual transmission		$3,020

Spring Reinforcement			
Part Number	**Description**	**List Price**	**Installed List Price**
736995000	Spring reinforcement		$1,673

Equipment			
Part Number	**Description**	**List Price**	**Installed List Price**
750831000	ICC safety kit (Complies with FMVH Safety Standard No. 125, Sec. 571.125)	$72.50	
750061000	Fire extinguisher (Complies with FMCS Regs. Sec. 393.95 – classification 2 – A:10-B:C unit)	$132	
750681000	Backup safety alarm		$252

Hydraulic Installation Kits			
Part Number	**Description**	**List Price**	**Installed List Price**
760485001	Hydraulics installed to operate hydraulic crane, hydraulic outriggers, and air compressor.	$1,157	

Titan 85 – 14’ Body (120” CA) Accessories

Hydraulic Reservoirs			
Part Number	**Description**	**List Price**	**Installed List Price**
480420100	15-gallon reservoir with return filter, sight gauge, and suction strainer	$382	
738498000	23-gallon bulkhead reservoir to fit inside 50" wide cargo area with site gauge and return filter	$823	
751095050	36-gallon bulkhead reservoir to fit inside 50" wide cargo area with return filter and sight gauge	$898	
340169400	Oil Cooler Kit (for use when oil temperature exceeds 180°, or application prevents install of recommended 2x total GPM tank capacity, or crane and/or compressor is operated in continuous duty applications)	$2,278	

Speed Control			
Part Number	**Description**	**List Price**	**Installed List Price**
717535000	Relay Box Assembly	$675	
717515000	Power Switch Control Panel Assembly	$498	
717514000	Stand for Control Panel (include with above part number if mounting in cab of chassis)	$295	

TRUCK CLASS BODY LIMITATIONS

Designation			Available Chassis						AutoCrane Models		
Class	GVWR (lbs) Min	GVWR (lbs) Max	Ford Model	Dodge Model	International	Kenworth	Freightliner	Peterbilt	Body	Crane (min GVWR)	Crane/Body Combination
1	0	6000	No bodies built for this class of vehicle						N/A	Econo-Ton(5200)	
2	6001	10000	F250	Ram 2500	N/A	N/A	N/A	N/A	N/A	2003 (8000)	
										3203(8800)***	
3	10001	14000	F350	Ram 3500					Titan 16	4004(10500)	
4	14001	16000	F450	Ram 4500*					Titan 38**	HC6(14500) HC7(14500)	
5	16001	19500	F550	Ram 4500- Ram 5500*	Terra Star Durastar 4100	T170	M2-106			6006EH(14500) HC8(19500)****	
6	19501	26000	F650*	N/A	Durastar*	T270	M2-106		Titan 50	8406H (20500)	
									Titan 60	HC9 (26000) HC10(26000)	
7	26001	33000	F650-F750*			T370	M2-106	330-335	Titan 70	HC12(29000)	
8	33001	+	N/A			T370	M2-106	340-389		HC14(29000)	

* Not all the chassis in that model fit into that classification. (Reference specific model body builder book for more information)

** If Titan 38 body is used in conjunction with a 25,000 ft-lbs crane or higher, it must be mounted to a 14,500 GVWR or higher vehicle

*** The 3203 crane can be installed on a Class 2 chassis but cannot be combined with the Titan Service Body

**** HC-8 crane only compatible with Titan 38/84 CA and must be mounted to a 19,500 GVWR or higher vehicle and must use 738493-000 outriggers or equal.

Note: Most bodies can be mounted to larger chassis. However, you may have problems with wheel well opening clearances. Need to verify clearances in body builder book for that truck model to confirm

Saddles

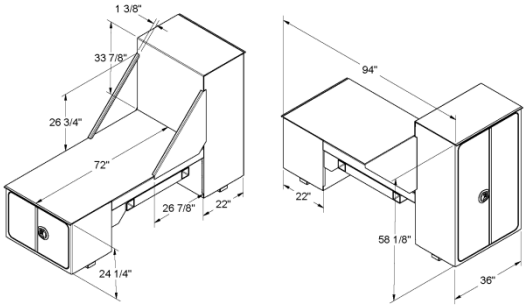

Part Number	Description	List Price
560257000	36” wide welders, 58” Tall	$6,127

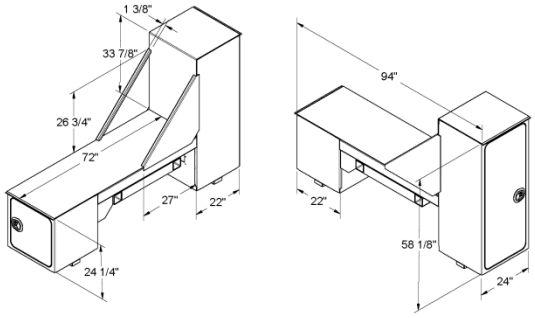

Part Number	Description	List Price
560257024	24” wide, left side is 58” tall	$4,308

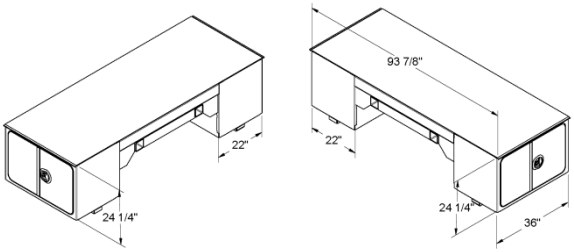

Part Number	Description	List Price
560575000	36” wide welders, 24” Tall	$4,716

Saddles

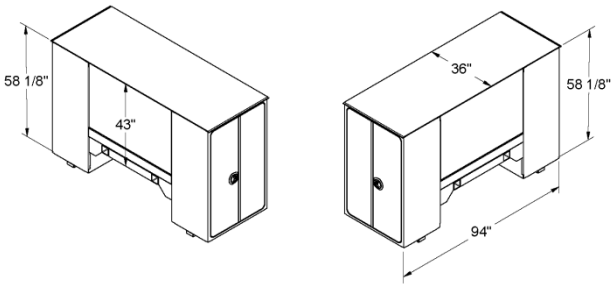

Part Number	Description	List Price
560490000	36” wide, traverse	$6,270

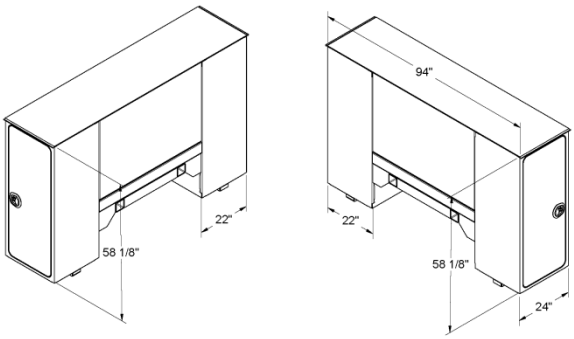

Part Number	Description	List Price
560490024	24” wide, 58” tall, traverse	$4,518

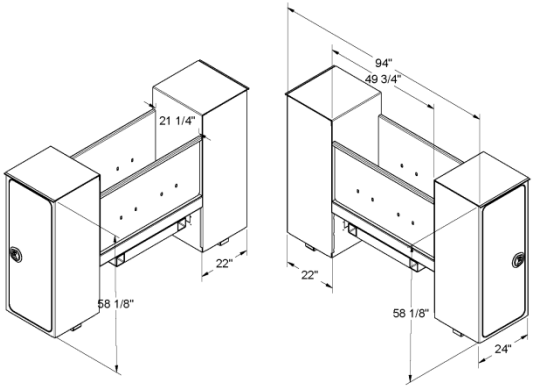

Part Number	Description	List Price
560269024	24” wide, 58” double tall	$4,687

Saddles

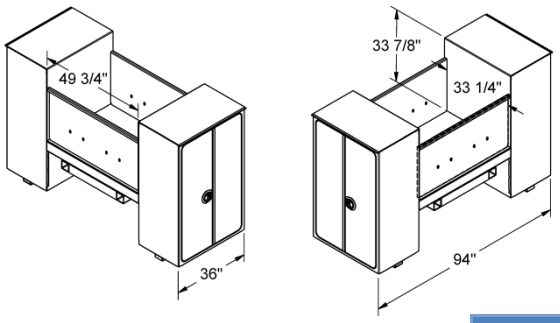

Part Number	Description	List Price
560269000	36” wide, double tall	$4,833

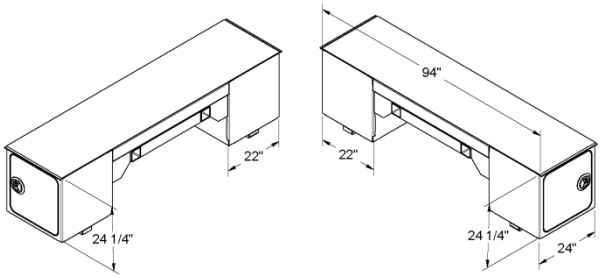

Part Number	Description	List Price
560575024	24” wide, 24” tall	$4,308

Saddle Accessories

Paint			
Part Number	**Description**	**List Price**	**Installed List Price**
766606000	(Auto Crane White) Paint for saddle	$787	
716881060	Paint outside of saddle white and Zolatone inside compartment	$987	

Installation Charges			
Part Number	**Description**	**List Price**	**Installed List Price**
716852000	Install saddle (Add part number to saddle part number)	$568	

Auto Crane Compressors

Reciprocating Air Compressor			
Part Number	**Description**	**List Price**	**Installed List Price**
755501000	AC40 hydraulic compressor delivers 40 acfm @ 100 psi (Approximate weight is 200 lbs.)	$5,127	
739188057	AC40 mounting kit installed		$225
755499000	Install air compressor (Add to air compressor part number above)		Add $499

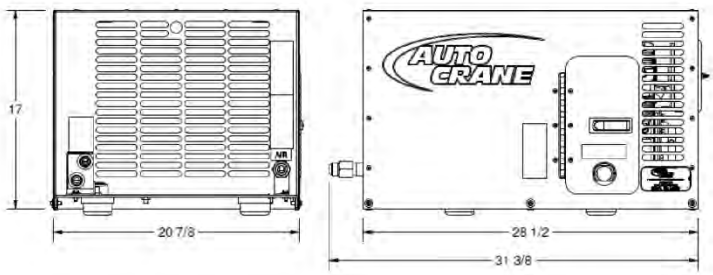

Rotary Screw Air Compressor			
Part Number	**Description**	**List Price**	**Installed List Price**
755500000	RS60AC rotary screw air compressor, generates 45 cfm to 60 cfm @ 150 psi (Dry weight is 300 lbs. Dimensions: 36.75" x 20.25" x 19.5")	$8,060	
755499110	RS60 mounting kit installed		$225
755499000	Install air compressor (Add to air compressor part number above)		Add $499

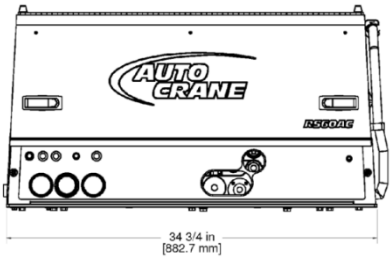

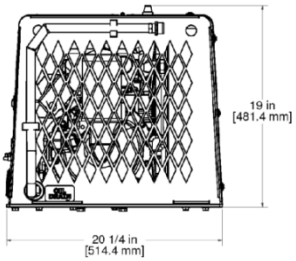

Miller and Vanair

Miller EnPak			
Part Number	**Description**	**List Price**	**Installed List Price**
739188091	EnPak, open center (Power unit only, no welder)	$25,433	
739188092	EnPak, open center / Maxstar 210 STR Welder Package	$27,989	
739188096	EnPak, open center / Multimatic 200 Welder - MIG/TIG/Stick, 150 amp	$27,621	
739188093	20 gallon hydraulic reservoir tank for EnPak	$1,254	
739188095	Adapter, NexStar wireless remote	$199	
739188066	EnPak and reservoir mounting kit		$595
716861500	Install EnPak (Add to EnPak part number above)		Add $2,336

739188091

739188092

739188096

Vanair			
Part Number	**Description**	**List Price**	**Installed List Price**
739188100	Air N Arc 1300 w/hydraulic reservoir and accessories	$31,995	
739188103	Vanair Air N Arc mounting kit		$589
716861500	Install Vanair (Add to Vanair part number above)		Add $2,336
601106005	Vanair Pro 35 (35 CFM @ 100 PSI, 30 gallon)	$3,570	
755499000	Install Vanair (Add to Vanair part number above)		Add $499

739188100

601106005

Welders

Part Number	Description	List Price	Installed List Price
739186000	Miller Bobcat 250 Gas Welder	$6,414	
601109002	Install welder (Add to welder part number above)		Add $499

739186000

Titan Trax			
Part Number	**Description**	**List Price**	**Installed List Price**
739185015	Bracket weldment (Installed rear of body opposite crane box)		$124
739185016	Bracket weldment and channel (Miller Bobcat 250)		$325
739185019	Channel weldment (Miller Bobcat 250)	$102 each	

Accessories

Air Filter, Regulator, Lubricator			
Part Number	**Description**	**List Price**	**Installed List Price**
750205016	Air filter, regulator, lubricator assembly	$439	
750682000	Air filter, regulator, lubricator (Includes part number above)		$657
340169400	Oil Cooler Kit (For use when oil temperature exceeds 180°, or application prevents install of recommended 2x total GPM tank capacity, or crane and/or compressor is operated in continuous duty applications)		$2,278

Hose Reels			
Part Number	**Description**	**List Price**	**Installed List Price**
750822000	Hose reel with 50 ft. of 1/2" hose (Includes connecting hose and hardware)	$780	
750632000	Hose reel installed with 50 ft. of 1/2” hose		$886
750635000	Hose reel installed with 50 ft. of 1/2" hose with Right Side rear exit and 4-way roller		$1,282
751080000	Hose reel with 50 ft. of 3/4" hose (Includes connecting hose and hardware)	$1,783	
750213000	4-Way roller to be used with hose reels	$353	
750213001	4-Way roller installed (Includes part number above)		$959
716872000	Install hose reels (Add to hose reel part number above)		Add $107
739409000	Hose reel access door with shelf (for Titan 38)		$203
760235000	Hose reel access door with shelf (for Titan 50,60,70)		$349

Air Receiver Tanks			
Part Number	**Description**	**List Price**	**Installed List Price**
475400015	20 Gallon in frame air tank -2 tanks, 10 gallons each (For use on the Titan 38 body only)	$1,975	
475400010	Install 20 gallon in frame air tank (Add to part number above)		Add $298
750828000	30-gallon receiver tank, pressure gauge, connecting hoses and hardware (Overall dimensions: 38" x 16" x 18.25")	$793	
751220000	30-gallon under-chassis mount receiver tank, connecting hoses and hardware. Overall dimensions: 26" x 20" x 20" (Mounts at the rear of the chassis between the frame rails (Titan 50, 60, and 70 bodies)	$1,193	
750848000	60-gallon receiver tank, pressure gauge, connecting hoses and hardware. Overall dimensions: 48" x 20" x 22.5".	$1,198	
716873000	Install air receiver tank (Add to part number above)		Add $298

Lube Skids

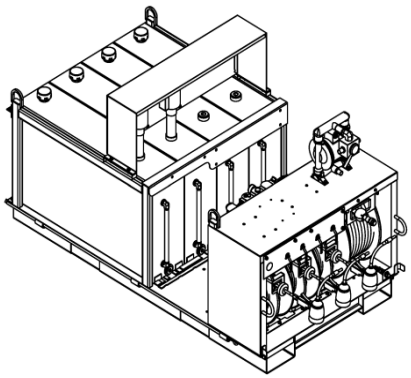

Part Number	Description	List Price
601000001	Mobile Lube Skid Tank Configuration: (2) Oil, (1) Anti-freeze, (1) Oil Salvage 60 gallon top fill aluminum tanks	$18,486

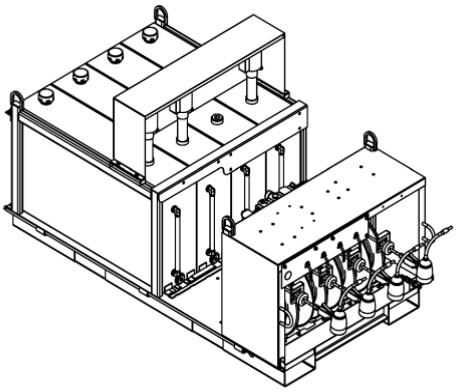

Part Number	Description	List Price
601000002	Mobile Lube Skid Tank Configuration: (3) Oil, (1) Anti-freeze 60 gallon top fill aluminum tanks	$18,486

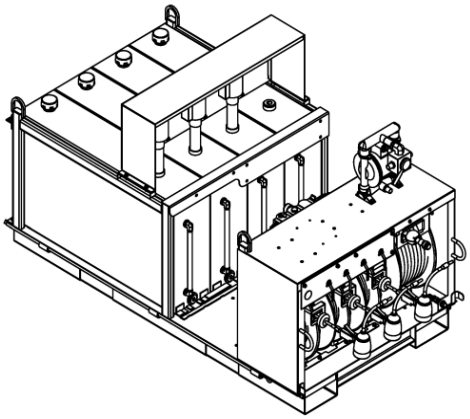

Part Number	Description	List Price
601000003	Mobile Lube Skid Tank Configuration: (3) Oil, (1) Oil Salvage 60 gallon top fill aluminum tanks	$18,995

Lube Skids

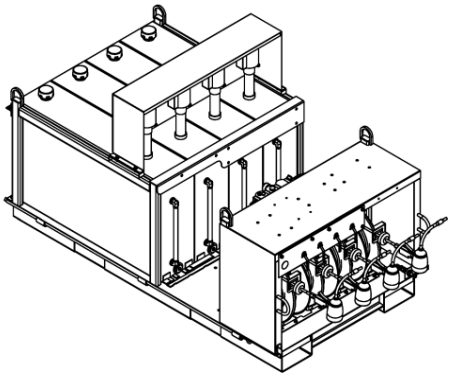

Part Number	Description	List Price
601000004	Mobile Lube Skid Tank Configuration: (4) Oil 60 gallon top fill aluminum tanks	$18,995

Lube Skid Options

Hose Reels			
Part Number	**Description**	**List Price**	**Installed List Price**
601000020	Grease Pump Option - includes: - air piston pump (50:1) - tie down kit - control valve - 50' of 3/8" hose on reel - air regulator - hose and connectors	$3,118	
601000032	Filter Option - (2) filters (for use with part number 601000001)	$840	
601000033	Filter Option - (3) filters (for use with part numbers 601000002 and 601000003)	$1,190	
601000034	Filter Option - (4) filters (for use with part number 601000004)	$1,540	
601000040	Oil Pump Option - 5:1 upgrade kit (One kit per tank)	$345	

Service Cranes (Limited Warranty, 2 Year Parts and Labor)

Auto Crane will warranty to the consumer for a period of (2) years parts and labor from the date of purchase. Each new Auto Crane unit they sell will be free under normal use and service from defects in material and workmanship. Date of purchase will be honored as the date indicated on the Bill of Sale, which must accompany the Warranty Registration and be on file with Auto Crane. Absent a valid Warranty Registration and appropriate documentation, the original date of manufacture, as indicated by the serial number on the product, will be used to determine the effective date of the 2 year warranty.

The obligation of Auto Crane under this warranty is limited to the replacement or repair of parts that appear to the manufacturer after review and/or inspection to be defective and paid flat rate labor for replacing defective parts. This warranty does not obligate Auto Crane to bear the travel time charges in connection with the replacement or repair of defective parts. Responsibility for customer's claims arising from misapplication, abuse, misuse or alteration of equipment or parts lies with the distributor or user and no warranty obligation is assumed in these circumstances by Auto Crane.

Auto Crane will in no event be liable for any consequential damages or contingent liabilities arising out of the failure of any Auto Crane Product or parts to operate properly.

Auto Crane makes no warranty in respect to component accessories, it being subject to the warranties of their respective manufacturers.

If field service, at the request of the distributor, is rendered and fault is found not to be with Auto Crane's product, the distributor shall pay the time and expense of the field representative.

Claims for service labor or other expenses that have incurred by the buyer without approval or authorization or Auto Crane will not be accepted.

Crane Bodies (5 Year Limited Body Warranty)

Covered Products:

- Auto Crane Service Bodies -- no rust-thru guarantee to the first owner/user or record for five (5) years from the date of purchase.
- Door Hinges -- Guarantee the hinges will not fail to operate or come off the product, to the first owner/user of record for five (5) years from the date of purchase.

Eligibility:

- Product(s) warranted must be properly maintained and serviced under the guidelines recommended in the Owner’s Manual.
- The selling distributor must file for the first owner/user the application for warranty by completing the delivery report form enclosed in the Owner Manual within 30 days of the product purchase date. The complete delivery report form must be forwarded to Auto Crane Company. The warranty agreement issued is not transferable.
- Product(s) that have been misused or damaged, inclusive of, but not limited to, accidents.

Exclusions:

- Warranty applies to the Auto Crane bodies only and excludes all options, modifications and alterations.
- Paint required following repairs or replacement of parts under warranty after the first year from the date of delivery.
- Product(s) that have been misused or damaged, inclusive of, but not limited to, accidents.
- Absent a completed and valid delivery report form, the original date of manufacture will be used as the effective date for the limited warranty.

Specific Non-Rust-Thru Warranty Exclusions:

- Product(s) that have been used to carry corrosive materials, where such materials result in rust-thru conditions.
- Product(s) purchased by the first owner/user in prime paint condition.
- Consequential damages including, but not limited to, transportation costs, lost profit and loss of income, as a result of a vehicle being out of service.
- Product(s) purchased and used outside the U.S.A. or Canada.

Applying for Warranty

- Claims may be handled by contacting your nearest authorized Auto Crane Distributor. All claims are to be filed in writing on an Auto Crane Warranty Claim Form.
- The Auto Crane Company reserves the sole right to inspect item(s) claimed for warranty and decide the best way to handle any and all claims, including the replacement or repair of the warranted part.
- Should the warranted product rust thru, the hinges fail to operate or come off the product, Auto Crane will pay the cost of parts and flat rate labor to repair or replace as necessary the defective component. NOTE: Paint following repair or replacement of a part is exclusive under warranty after the first year from date of delivery.
- DEFECTS FROM MANUFACTURING WORKMANSHIP AND/OR MATERIAL NOT SPECIFIED ABOVE WILL BE SUBJECT TO WARRANTY INCLUSIVE OF MATERIALS AND LABOR TO THE FIRST OWNER/USER OF RECORD FOR TWO (2) YEARS FROM THE DATE OF DELIVERY. Exclusions, as well as methods of applying for warranty remain the same as stated in the limited five (5) year warranty covered above.

AUTO CRANE COMPANY IS UNDER NO OBLIGATION TO EXTEND THIS WARRANTY TO ANY CUSTOMER FOR WHICH AN AUTO CRANE DELIVERY REPORT FORM HAS NOT BEEN COMPLETED AND ON FILE WITH AUTO CRANE COMPANY

AUTO CRANE

PRODUCT	PART #	MAP PRICE	DESCRIPTION	LENGTH	HEIGHT	DEPTH	WEIGHT
FRAME – BACKRACK	15001	$156.00	Frame Only, HW Kit Required – 30201	74	28.5	2.5	50
FRAME – BACKRACK	15002	$156.00	Frame Only, HW Kit Required – 30126	72.5	26	2.5	48
FRAME – BACKRACK	15003	$156.00	Frame Only, HW Kit Required – 30109, 30102, 30104, 30511	72.5	26	2.5	48
FRAME – BACKRACK	15004	$156.00	Frame Only, HW Kit Required – 30103, 30119, 30112, 30118, 30123	72.5	26	2.5	48
FRAME – BACKRACK	15005	$156.00	Frame Only, HW Kit Required – 30103, 30105, 30106, 30107,	72.5	26	2.5	48
FRAME – BACKRACK	15006	$156.00	Frame Only, HW Kit Required – 30117, 30127	72.5	26	2.5	48
FRAME – BACKRACK	15007	$156.00	Frame Only, HW Kit Required – 30108	72.5	26	2.5	48
FRAME – BACKRACK	15009	$156.00	Frame Only, HW Kit Required – 30111, 30113	72.5	26	2.5	42
FRAME – BACKRACK	15010	$156.00	Frame Only, HW Kit Required – 30113, 30317	72.5	26	2.5	42
FRAME – BACKRACK	15015	$156.00	Frame Only, HW Kit Required – 30116	72.5	26	2.5	42
FRAME – BACKRACK	15016	$156.00	Frame Only, HW Kit Required – 30113	72.5	26	2.5	42
FRAME – BACKRACK	15017	$156.00	Frame Only, HW Kit Required – 30147	72.5	26	2.5	45
FRAME--BACKRACK	15018	$156.00	Frame Only, HW Kit Required--30221	72.5	26	2.5	45
FRAME – BACKRACK SHORT	15021	$156.00	Frame Only, HW Kit Required – 50201, 50221	72.5	26	2.5	42
FRAME – BACKRACK SHORT	15024	$156.00	Frame Only, HW Kit Required – 50119, 50120, 50123, 50112	72.5	26	2.5	42
FRAME – BACKRACK SHORT	15026	$156.00	Frame Only, HW Kit Required – 50127, 50117	72.5	26	2.5	45
FRAME – SAFETY	10200	$205.00	Frame Only, HW Kit Required – 30111, 30113, 30116, 30317	72.5	26	2.5	35
FRAME – SAFETY	10300	$205.00	Frame Only, HW Kit Required – 30201	74	28.5	2.5	40
FRAME – SAFETY	10400	$205.00	Frame Only, HW Kit Required – 30102,103,104,105,106,107,108,109,117,127,511	72.5	26	2.5	38
FRAME – SAFETY	10500	$205.00	Frame Only, HW Kit Required – 30112, 30118, 30119, 30123	72.5	26	2.5	38
FRAME – SAFETY	10600	$205.00	Frame Only, HW Kit Required – 30126	72.5	26	2.5	38
FRAME – SAFETY	10700	$205.00	Frame Only, HW Kit Required – 30201, 30221	72.5	26	2.5	38
FRAME – LOUVERED	12300	$219.00	Frame Only, HW Kit Required – 30201	74	28.5	2.5	52
FRAME – LOUVERED	12400	$219.00	Frame Only, HW Kit Required – 30102,103,104,105,106,107,108,109,117,127,511	72.5	26	2.5	48
FRAME – LOUVERED	12500	$219.00	Frame Only, HW Kit Required – 30112, 30118, 30119, 30123	72.5	26	2.5	48
FRAME – LOUVERED	12700	$219.00	Frame Only, HW Kit Required--30201, 30221	72.5	26	2.5	48
FRAME – OPEN	14300	$156.00	Frame Only, HW Kit Required – 30201	74	28.5	2.5	40
FRAME – OPEN	14400	$156.00	Frame Only, HW Kit Required – 30102,103,104,105,106,107,108,109,117,127,511	72.5	26	2.5	36
FRAME – OPEN	14500	$156.00	Frame Only, HW Kit Required – 30112, 30118, 30119, 30123	72.5	26	2.5	36
FRAME – OPEN	14700	$156.00	Frame Only, HW Kit Required – 30201, 30221	72.5	26	2.5	36
FRAME – HALF LOUVER	143LV	$219.00	Frame Only, HW Kit Required – 30201	74	28.5	2.5	46
FRAME – HALF LOUVER	144LV	$219.00	Frame Only, HW Kit Required – 30102,103,104,105,106,107,108,109,117,127,511	72.5	26	2.5	42
FRAME – HALF LOUVER	145LV	$219.00	Frame Only, HW Kit Required – 30112, 30118, 30119, 30123	72.5	26	2.5	42
FRAME – HALF LOUVER	147LV	$219.00	Frame Only, HW Kit Required – 30201, 30221	72.5	26	2.5	42
FRAME – HALF SAFETY	143SM	$219.00	Frame Only, HW Kit Required – 30201	74	28.5	2.5	43
FRAME – HALF SAFETY	144SM	$219.00	Frame Only, HW Kit Required – 30102,103,104,105,106,107,108,109,117,127,511	72.5	26	2.5	39
FRAME – HALF SAFETY	145SM	$219.00	Frame Only, HW Kit Required – 30112, 30118, 30119, 30123	72.5	26	2.5	39
FRAME – HALF SAFETY	147SM	$219.00	Frame Only, HW Kit Required – 30201, 30221	72.5	26	2.5	39
FRAME – THREE ROUND	143TR	$219.00	Frame Only, HW Kit Required – 30201	74	28.5	2.5	43
FRAME – THREE ROUND	144TR	$219.00	Frame Only, HW Kit Required – 30102,103,104,105,106,107,108,109,117,127,511	72.5	26	2.5	39
FRAME – THREE ROUND	145TR	$219.00	Frame Only, HW Kit Required – 30112, 30118, 30119, 30123	72.5	26	2.5	39
FRAME – THREE ROUND	147TR	$219.00	Frame Only, HW Kit Required – 30201, 30221	72.5	26	2.5	39

FRAME - THREE LIGHT	143TL	$299.00	Frame Only, HW Kit Required - 30201	74	28.5	2.5	52
FRAME - THREE LIGHT	144TL	$299.00	Frame Only, HW Kit Required - 30102,103,104,105,106,107,108,109,117,127,511	72.5	26	2.5	48
FRAME - THREE LIGHT	145TL	$299.00	Frame Only, HW Kit Required - 30112, 30118, 30119, 30123	72.5	26	2.5	48
FRAME - THREE LIGHT	147TL	$299.00	Frame Only, HW Kit Required - 30201, 30221	72.5	26	2.5	48
STANDARD NO DRILL	30102	$84.00	Hardware Kit, 1997-2003 F-150 Safety Rack Only (No Supercrew)	17	5	3.5	8
STANDARD NO DRILL	30103	$84.00	Hardware Kit, 1968-1998 Chev/GMC CK Series	17	5	3.5	10
STANDARD NO DRILL	30104	$84.00	Hardware Kit, 1997-2003 Ford F-150 Supercrew	17	5	3.5	12
STANDARD NO DRILL	30105	$84.00	Hardware kit, 1975-1996 Ford F-150 6.5 ft only	17	5	3.5	14
STANDARD NO DRILL	30106	$84.00	Hardware Kit, 1975-1996 Ford F-150 8 ft only	17	5	3.5	10
STANDARD NO DRILL	30107	$84.00	Hardware Kit, 1994-2001 Dodge Ram	17	5	3.5	14
STANDARD NO DRILL	30108	$84.00	Hardware Kit, 1995-2007 Toyota Tundra	17	5	3.5	10
STANDARD NO DRILL	30109	$84.00	Hardware kit, 1999-2007 Chev/GMC Classic	17	5	3.5	13
STANDARD NO DRILL	30111	$84.00	Hardware Kit, 1993-2014 Ford Ranger / 1993-2014 Mazda	17	5	3.5	15
STANDARD NO DRILL	30112	$84.00	Hardware Kit, 2004-2014 Ford F-150	17	5	3.5	15
STANDARD NO DRILL	30113	$84.00	Hardware Kit, 1987-2016 Dakota / 87-16 Nissan / 97-04 Tacoma / 85-05 S10, S15	17	5	3.5	12
STANDARD NO DRILL	30116	$84.00	Hardware Kit, 2004-2014 Colorado / Canyon	17	5	3.5	12
STANDARD NO DRILL	30117	$84.00	Hardware Kit, Dodge Ram 02-16 8ft / 2010-16 6.5ft / 2002-08 All Beds	17	5	3.5	13
STANDARD NO DRILL	30118	$84.00	Hardware Kit, 2008-2016 Toyota Tundra	17	5	3.5	12
STANDARD NO DRILL	30119	$84.00	Hardware Kit, 2007-2016 Chev/GMC Silverado, Sierra	17	5	3.5	13
STANDARD NO DRILL	30123	$99.00	Hardware Kit, 2015-2016 Ford F-150 Aluminum New Body	17	5	3.5	12
STANDARD NO DRILL	30126	$84.00	Hardware Kit, 2015-2016 Colorado / Canyon	17	5	3.5	13
STANDARD NO DRILL	30127	$84.00	Hardware Kit, Dodge Ram 2009-16 5.5ft Bed Only	17	5	3.5	14
STANDARD NO DRILL	30147	$84.00	Hardware Kit, Dodge Ram 2009-2016 - 5.5 ft Ram Box Only	27.5	6	3.5	15
STANDARD NO DRILL	30201	$84.00	Hardware Kit, 1999-2016 Superduty	27.5	6	3.5	18
STANDARD NO DRILL	30221	$99.00	Hardware Kit, 2017-Aluminum Superduty	27.5	6	3.5	18
STANDARD NO DRILL	30317	$84.00	Hardware Kit, 2005-2015 Toyota Tacoma	11.5	8	8	15
STANDARD NO DRILL	30327	$84.00	Hardware Kit, 2016 Toyota Tacoma	11.5	8	8	15
STANDARD NO DRILL	30511	$84.00	Hardware Kit, 2004-2015 Nissan Titan (2016 Not Available as this time)	17	5	3.5	12
DRILL MOUNT UTLITY	30999	$84.00	Utility Hardware Kit Drill and Bolt	11.5	8	8	15
TOOLBOX NO DRILL 21"	30102TB	$84.00	Hardware Kit, 1997-2003 F-150 Safety Rack Only (No Supercrew)	27.5	6	3.5	15
TOOLBOX NO DRILL 21"	30103TB	$84.00	Hardware Kit, 1968-1998 Chev/GMC CK Series	27.5	6	3.5	15
TOOLBOX NO DRILL 21"	30104TB	$84.00	Hardware Kit, 1997-2003 Ford F-150 Supercrew	27.5	6	3.5	14
TOOLBOX NO DRILL 21"	30106TB	$84.00	Hardware Kit, 1975-1996 Ford F-150	27.5	6	3.5	15
TOOLBOX NO DRILL 21"	30107TB	$84.00	Hardware Kit, 1994-2001 Dodge Ram	27.5	6	3.5	15
TOOLBOX NO DRILL 21"	30108TB	$84.00	Hardware Kit, 1995-2007 Toyota Tundra	27.5	6	3.5	15
TOOLBOX NO DRILL 21"	30109TB	$84.00	Hardware kit, 1999-2007 Chev/GMC Classic	27.5	6	3.5	15
TOOLBOX NO DRILL 21"	30111TB	$84.00	Hardware Kit, 1993-2014 Ford Ranger / 1993-2014 Mazda	27.5	6	3.5	15
TOOLBOX NO DRILL 21"	30112TB	$84.00	Hardware Kit, 2004-2014 Ford F-150	27.5	6	3.5	14
TOOLBOX NO DRILL 21"	30113TB	$84.00	Hardware Kit, 87-2016 Dakota / 87-16 Nissan / 97-04 Tacoma / 85-05 S10, S15	27.5	6	3.5	14
TOOLBOX NO DRILL 21"	30116TB	$84.00	Hardware Kit, 2004-2014 Colorado / Canyon	27.5	6	3.5	15
TOOLBOX NO DRILL 21"	30117TB	$84.00	Hardware Kit, Dodge Ram 2002-2016 All Bed Lengths	27.5	6	3.5	15
TOOLBOX NO DRILL 21"	30118TB	$84.00	Hardware Kit, 2008-2016 Toyota Tundra	27.5	6	3.5	15
TOOLBOX NO DRILL 21"	30119TB	$84.00	Hardware Kit, 2007-2016 Chev/GMC Silverado, Sierra	27.5	6	3.5	15
TOOLBOX NO DRILL 21"	30123TB	$99.00	Hardware Kit, 2015-2016 Ford F-150 Aluminum New Body	27.5	6	3.5	15

TOOLBOX NO DRILL 21"	30126TB	$84.00	Hardware Kit, 2015-2016 Colorado / Canyon	27.5	6	3.5	15
TOOLBOX NO DRILL 21"	30201TB	$84.00	Hardware Kit, 1999-2016 Superduty	27.5	6	3.5	16
TOOLBOX NO DRILL 21"	30221TB	$99.00	Hardware Kit, 2017-Aluminum Superduty	27.5	6	3.5	16
TOOLBOX NO DRILL 21"	30317TB	$84.00	Hardware Kit, 2005-2016 Toyota Tacoma	23	5.5	4.5	13
TOOLBOX NO DRILL 21"	30327TB	$84.00	Hardware Kit, 2016 Toyota Tacoma	23	5.5	4.5	13
TOOLBOX NO DRILL 21"	30511TB	$84.00	Hardware Kit, 2004-2015 Nissan Titan (2016 Not Available at this time)	17	5	3.5	12
TOOLBOX NO DRILL 31"	30102TB31	$84.00	Hardware Kit, 1997-2003 F-150 Safety Rack Only (No Supercrew)	37	6.5	4	20
TOOLBOX NO DRILL 31"	30103TB31	$84.00	Hardware Kit, 1968-1998 Chev/GMC CK Series	37	6.5	4	20
TOOLBOX NO DRILL 31"	30106TB31	$84.00	Hardware Kit, 1975-1996 Ford F-150	37	6.5	4	20
TOOLBOX NO DRILL 31"	30107TB31	$84.00	Hardware Kit, 1994-2001 Dodge Ram	37	6.5	4	20
TOOLBOX NO DRILL 31"	30108TB31	$84.00	Hardware Kit, 1995-2007 Toyota Tundra	37	6.5	4	20
TOOLBOX NO DRILL 31"	30109TB31	$84.00	Hardware kit, 1999-2007 Chev/GMC Classic	37	6.5	4	20
TOOLBOX NO DRILL 31"	30111TB31	$84.00	Hardware Kit, 1993-2014 Ford Ranger / 1993-2014 Mazda	37	6.5	4	20
TOOLBOX NO DRILL 31"	30112TB31	$84.00	Hardware Kit, 2004-2014 Ford F-150	37	6.5	4	20
TOOLBOX NO DRILL 31"	30117TB31	$84.00	Hardware Kit, Dodge Ram 2002-2016 All Bed Lengths	37	6.5	4	20
TOOLBOX NO DRILL 31"	30118TB31	$84.00	Hardware Kit, 2008-2016 Toyota Tundra	37	6.5	4	20
TOOLBOX NO DRILL 31"	30119TB31	$84.00	Hardware Kit, 2007-2016 Chev/GMC Silverado, Sierra	37	6.5	4	20
TOOLBOX NO DRILL 31"	30123TB31	$99.00	Hardware Kit, 2015-2016 Ford F-150 Aluminum New Body	37	6.5	4	20
TOOLBOX NO DRILL 31"	30126TB31	$84.00	Hardware Kit, 2015-2016 Colorado / Canyon	37	6.5	4	20
TOOLBOX NO DRILL 31"	30201TB31	$84.00	Hardware Kit, 1999-2016 Superduty	37	6.5	4	20
TOOLBOX NO DRILL 31"	30221TB31	$99.00	Hardware Kit, 2017-Aluminum Superduty	37	6.5	4	20
TOOLBOX NO DRILL 31"	30511TB31	$84.00	Hardware Kit, 2004-2015 Nissan Titan (2016 Not Available as this time)	37	6.5	4	20
LOW PROFILE DRILL	30127LP	$84.00	Low Profile Hardware Kit, Dodge Ram 2009-16 5.5ft Bed Only	27.5	6	3.5	15
LOW PROFILE DRILL	30117LP	$84.00	Low Profile Hardware Kit, Dodge Ram 02-16 8ft / 2010-16 6.5ft / 2002-08 All Beds	27.5	6	3.5	15
LOW PROFILE DRILL	30119LP	$84.00	Low Profile Hardware Kit, 2007-2016 Chev/GMC Silverado, Sierra	27.5	6	3.5	15
LOW PROFILE DRILL	30112LP	$84.00	Low Profile Hardware Kit, 2004-2014 Ford F-150	27.5	6	3.5	15
LOW PROFILE DRILL	30201LP	$84.00	Low Profile Hardware Kit, 1999-2017 Superduty	27.5	6	3.5	15
LIGHT BRKT	41000	$39.00	Light Brkt, 11" x 11" Base, Safety Rack Universal	11	11	1.25	5
LIGHT BRKT	81001	$39.00	Light Brkt, 6-1/2" Base, Drivers Side	8	8	11.5	3
LIGHT BRKT	81003	$39.00	Light Brkt, 6-1/2" Base, Passenger Side	8	8	11.5	3
LIGHT BRKT	81004	$39.00	Light Brkt, 6-1/2" Base Safety Rack, Louvered, Insert P/D	8	8	11.5	4
LIGHT BRKT	91001	$39.00	Light Brkt, 10-1/2" Base, Drivers Side	17	11	2.5	6
LIGHT BRKT	91002	$39.00	Light Brkt, 10-1/2" Base, Center Mount	17	11	2.5	6
LIGHT BRKT	91003	$39.00	Light Brkt, 10-1/2" Base, Passenger Side	17	11	2.5	6
ARROW STK BRKT	91004	$31.00	Arrow Stick Brkts, 1pr.	8.5	5.5	3	2
LIGHT BRKT	91005	$24.00	Sport Light Brackets (pr)	8.5	5.5	3	3
LIGHT BRKT	91006	$39.00	Light Bar Brackets (pr)	9.5	6.5	3	7
LIGHT BRKT	91007	$39.00	Light Brkt, 16" x 7" Base, Drivers or Passenger Side	16.5	7.5	8.5	7
ANTENNA BRKT	91008	$31.00	Antenna Brkt, 3.50" Square with 7/8" Hole.	11	5	5	2
ANTENNA BRKT	91009	$31.00	Antenna Brkt, 3.50" Square with 7/8" Hole Safety Rack, Louvered, Insert	11	5	5	3
LIGHT BRKT	91002REC	$39.00	Light Brkt, 16" x 7" Base, Center Mount	17	11	2.5	7
LIGHT BRKT	91002RECF	$64.00	Light Brkt, 16" x 7" Base, Center Mount Folding	17	11	2.5	6
SHOVEL RACK	41011	$112.00	Landscape Tool Attachment, Clamp on, Universal for all Racks, 11 Tools	50	5	5	22
SHOVEL RACK MINI	41005	$84.00	Landscape Tool Attachment, Clamp on, Universal for all Racks, 5 Tool Mini	27.5	6	3.5	12

MINING WHIP BRKT	41008	$39.00	Attaches Mining/Buggy Whips, Universal all Racks	11	5	5	3
OFF ROAD LIGHT BRKT	42005	$64.00	Light Brkt, Clamp on, Universal for all Racks	32	4	3	11
REAR BAR	11501	$112.00	Rear Bar, 1999-2016 Superduty	73	5	3	25
REAR BAR	11502	$112.00	Rear Bar, 1997-2003 Ford F-150 (No Supercrew)	73	5	3	25
REAR BAR	11503	$112.00	Rear Bar, 1988-1998 Chev/GMC CK Series	73	5	3	25
REAR BAR	11506	$112.00	Rear Bar, 1975-1996 Ford F-150 8 ft only	73	5	3	25
REAR BAR	11507	$112.00	Rear Bar, 1994-2001 Dodge Ram	73	5	3	25
REAR BAR	11508	$112.00	Rear Bar, 1995-2007 Toyota Tundra	73	5	3	25
REAR BAR	11509	$112.00	Rear Bar, 1999-2007 Chev/GMC Classic	73	5	3	25
REAR BAR	11512	$112.00	Rear Bar, 2004-2014 Ford F-150	73	5	3	25
REAR BAR	11517	$112.00	Backrack, Dodge Ram 02-16 8ft / 2010-16 6.5ft / 2002-08 All Beds	73	5	3	25
REAR BAR	11518	$112.00	Rear Bar, 2008-2016 Toyota Tundra	73	5	3	25
REAR BAR	11519	$112.00	Rear Bar, 2007-2013 Chev/GMC Silverado, Sierra	73	5	3	25
REAR BAR	11520	$112.00	Rear Bar, 2014-2016 Chev/GMC Silverado, Sierra	73	5	3	25
REAR BAR	11523	$112.00	Rear Bar, 2015-2016 Ford F-150 and Superduty Aluminum New Body	73	5	3	25
REAR BAR	11527	$112.00	Rear Bar, 2009-2016 5.5 ft Bed, 2009 6.5 ft Bed	73	5	3	25
REAR BAR	11310R	$112.00	Rear Bar, 1993-2014 Ford Ranger / 1993-2014 Mazda	73	5	3	25
REAR BAR	11504C	$112.00	Rear Bar, 1968-1987 Chev/GMC	73	5	3	25
SIDERAILS	55519	$299.00	Side Rails, 5.5 ft Bed, 2007-2013 Silverado/Sierra	84	15	5	53
SIDERAILS	55512	$299.00	Side Rails, 5.5 ft Bed, 2004-2014 F-150	84	15	5	53
SIDERAILS	55523	$299.00	Side Rails, 5.5 ft Bed, 2015-2016 F-150	84	15	5	53
SIDERAILS	55520	$299.00	Side Rails, 5.5 ft Bed, 2014-2016 Silverado/Sierra	84	15	5	53
SIDERAILS	65501	$299.00	Side Rails, 6.5ft Bed, 1999-2016 Superduty	84	15	5	53
SIDERAILS	65521	$299.00	Side Rails, 6.5ft Bed, 2017 Superduty Aluminum	84	15	5	53
SIDERAILS	65509	$299.00	Side Rails, 6.5 ft Bed, 1999-2007 Chev/GMC Classic	84	15	5	53
SIDERAILS	65512	$299.00	Side Rails, 6.5ft Bed, 2004-2014 F-150	84	15	5	53
SIDERAILS	65517	$299.00	Side Rails, 6.5ft Bed, 2002-2016 Dodge Ram	84	15	5	53
SIDERAILS	65519	$299.00	Side Rails, 6.5ft Bed, 2007-2013 Silverado/Sierra	84	15	5	53
SIDERAILS	65520	$299.00	Side Rails, 6.5ft Bed, 2014-2016 Silverado/Sierra	84	15	5	53
SIDERAILS	65523	$299.00	Side Rails, 6.5ft Bed, 2015-2016 F-150 Aluminum New Body	84	15	5	53
SIDERAILS	80501	$299.00	Side Rails, 8 ft Bed, 1999-2016 Superduty	101	15	5	62
SIDERAILS	80509	$299.00	Side Rails, 8 ft Bed, 1999-2007 Chev/GMC Classic	101	15	5	62
SIDERAILS	80512	$299.00	Side Rails, 8 ft Bed, 2004-2014 F-150	101	15	5	62
SIDERAILS	80517	$299.00	Side Rails, 8 ft Bed, 2002-2016 Dodge Ram	101	15	5	62
SIDERAILS	80519	$299.00	Side Rails, 8 ft Bed, 2007-2013 Silverado/Sierra	101	15	5	62
SIDERAILS	80520	$299.00	Side Rails, 8 ft Bed, 2014-2016 Silverado/Sierra	101	15	5	62
SIDERAILS	80523	$299.00	Side Rails, 8 ft Bed, 2015-2016 F-150 Aluminum New Body	101	15	5	62
SIDERAILS	80521	$299.00	Side Rails, 8 ft Bed, 2017 Superduty	101	15	5	62
SIDERAILS	55519TB	$299.00	Side Rails, 5.5ft Bed, 2007-2013 Silverado/Sierra 21" Toolbox	84	15	5	46
SIDERAILS	55512TB	$299.00	Side Rails, 5.5 ft Bed, 2004-2014 F-150 21" Toolbox	84	15	5	46
SIDERAILS	55523TB	$299.00	Side Rails, 5.5 ft Bed, 2015-2016 F-150 21" Toolbox	84	15	5	46
SIDERAILS	55520TB	$299.00	Side Rails, 5.5 ft Bed, 2014-2016 Silverado/Sierra 21" Toolbox	84	15	5	46
SIDERAILS	65501TB	$299.00	Side Rails, 6.5ft Bed, 1999-2016 Superduty, 21" Toolbox	84	15	5	46
SIDERAILS	65509TB	$299.00	Side Rails, 6.5ft Bed, 1999-2007 Chev/GMC Classic 21" Toolbox	84	15	5	46

SIDERAILS	65512TB	$299.00	Side Rails, 6.5ft Bed, 2004-2014 F-150, 21" Toolbox	84	15	5	46
SIDERAILS	65517TB	$299.00	Side Rails, 6.5ft Bed, 2002-2016 Dodge Ram, 21" Toolbox	84	15	5	46
SIDERAILS	65519TB	$299.00	Side Rails, 6.5ft Bed, 2007-2013 Silverado/Sierra 21" Toolbox	84	15	5	46
SIDERAILS	65520TB	$299.00	Side Rails, 6.5ft Bed, 2014-2016 Silverado/Sierra 21" Toolbox	84	15	5	46
SIDERAILS	65521TB	$299.00	Side Rails, 6.5ft Bed, 2017 Superduty Aluminum	84	15	5	46
SIDERAILS	65523TB	$299.00	Side Rails, 6.5 ft Bed, 2015-2016 F-150 Aluminum New Body 21" Toolbox	84	15	5	46
SIDERAILS	80501TB	$299.00	Side Rails, 8 ft Bed, 1999-2016 Superduty, 21" Toolbox	101	15	5	53
SIDERAILS	80509TB	$299.00	Side Rails, 8 ft Bed, 1999-2007 Chev/GMC Classic 21" Toolbox	101	15	5	53
SIDERAILS	80512TB	$299.00	Side Rails, 8 ft Bed, 2004-2014 F-150, 21" Toolbox	101	15	5	53
SIDERAILS	80517TB	$299.00	Side Rails, 8 ft Bed, 2002-2016 Dodge Ram, 21" Toolbox	101	15	5	53
SIDERAILS	80519TB	$299.00	Side Rails, 8 ft Bed, 2007-2013 Silverado/Sierra 21" Toolbox	101	15	5	53
SIDERAILS	80520TB	$299.00	Side Rails, 8 ft Bed, 2014-2016 Silverado/Sierra 21" Toolbox	101	15	5	53
SIDERAILS	80521TB	$299.00	Side Rails, 8 ft Bed, 2017 Superduty Aluminum	101	15	5	53
SIDERAILS	80523TB	$299.00	Side Rails, 8 ft Bed, 2015-2016 F-150 Aluminum New Body 21" Toolbox	101	15	5	53
TONNEAU HARDWARE KIT	40120	$129.00	Tonneau Hardware Kit - Low Profile, 2014-2016 Silverado, Sierra	15	8	6	15
TONNEAU HARDWARE KIT	40119	$129.00	Tonneau Hardware Kit - Low Profile, 2008-2013 Silverado, Sierra	15	8	6	15
TONNEAU HARDWARE KIT	40109	$129.00	Tonneau Hardware Kit - Low Profile, 1999-2007 Silverado, Sierra	15	8	6	15
TONNEAU HARDWARE KIT	40126	$129.00	Tonneau Hardware Kit - Low Profile, 2015-2016 Colorado, Canyon	15	8	6	15
TONNEAU HARDWARE KIT	40123	$129.00	Tonneau Hardware Kit - Low Profile, 2015-2016 F-150 Aluminum	15	8	6	15
TONNEAU HARDWARE KIT	40112	$129.00	Tonneau Hardware Kit - Low Profile, 2004-2014 F-150	15	8	6	15
TONNEAU HARDWARE KIT	40201	$129.00	Tonneau Hardware Kit - Low Profile, 1999-2016 Superduty	24	8	6	15
TONNEAU HARDWARE KIT	40221	$129.00	Tonneau Hardware Kit - Low Profile, 2017 Superduty Aluminium	24	8	6	15
TONNEAU HARDWARE KIT	40117	$129.00	Tonneau Hardware Kit - Low Profile, 2002-2016 Dodge 6.5 & 8ft Beds	15	8	6	15
TONNEAU HARDWARE KIT	40127	$129.00	Tonneau Hardware Kit - Low Profile, 2009-2016 Dodge 5.5ft Bed	15	8	6	15
TONNEAU HARDWARE KIT	40118	$129.00	Tonneau Hardware Kit - Low Profile, 2008-2016 Toyota Tundra	15	8	6	15
TONNEAU HARDWARE KIT	50327	$129.00	Tonneau Hardware Kit - Wide Top, 2016 Tacoma	16.5	7.5	8.5	28
TONNEAU HARDWARE KIT	50120	$129.00	Tonneau Hardware Kit - Wide Top, 2014-2016 Silverado, Sierra	13	14	7	28
TONNEAU HARDWARE KIT	50119	$129.00	Tonneau Hardware Kit - Wide Top, 2008-2013 Silverado, Sierra	13	14	7	28
TONNEAU HARDWARE KIT	50126	$129.00	Tonneau Hardware Kit - Wide Top, 2015-2016 Colorado, Canyon	13	14	7	28
TONNEAU HARDWARE KIT	50123	$129.00	Tonneau Hardware Kit - Wide Top, 2015-2016 F-150 Aluminum	13	14	7	28
TONNEAU HARDWARE KIT	50112	$129.00	Tonneau Hardware Kit - Wide Top, 2004-2014 F-150	13	14	7	28
TONNEAU HARDWARE KIT	50201	$129.00	Tonneau Hardware Kit - Wide Top, 1999-2016 Superduty	13	14	7	28
TONNEAU HARDWARE KIT	50221	$129.00	Tonneau Hardware Kit--Wide Top, 2017 Superduty Aluminum	13	14	7	28
TONNEAU HARDWARE KIT	50117	$129.00	Tonneau Hardware Kit - Wide Top, 2002-2016 Dodge 6.5 7 8ft Beds	13	14	7	28
TONNEAU HARDWARE KIT	50127	$129.00	Tonneau Hardware Kit - Wide Top, 2002-2016 Dodge 5.5' Bed Only	13	14	7	28
TONNEAU ADAPT	92001	$52.00	Tonneau-Universal 2" Riser	8	8	11.5	9
TONNEAU ADAPT	92501	$52.00	Tonneau-Low Profile 1" riser, 1999-2016 Superduty	17	5	3.5	7
TONNEAU ADAPT	92521	$52.00	Tonneau-Low Profile 1" riser, 2017 Superduty Aluminum	17	5	3.5	7
TONNEAU ADAPT	92509	$52.00	Tonneau-Low Profile 1" riser, 1999-2007 Chev/GMC Classic	17	5	3.5	5
TONNEAU ADAPT	92512	$52.00	Tonneau-Low Profile 1" riser, 2004-2014 Ford F-150	17	5	3.5	5
TONNEAU ADAPT	92517	$52.00	Tonneau-Low Profile 1" riser, 2002-2016 Dodge Ram All Models except RAMBOX	17	5	3.5	5
TONNEAU ADAPT	92518	$52.00	Tonneau-Low Profile 1" riser, 2008-2016 Toyota Tundra	17	5	3.5	5
TONNEAU ADAPT	92519	$52.00	Tonneau-Low Profile 1" riser, 2007-2016 Chev/GMC Silverado, Sierra	17	5	3.5	5
TONNEAU ADAPT	92523	$52.00	Tonneau-Low Profile 1" riser, 2015-2016 F-150 Aluminum New Body	17	5	3.5	5

TONNEAU ADAPT	92326	$52.00	Tonneau-Low Profile 1" riser, 2015-2016 Colorado / Canyon	17	5	3.5	5
TOOLBOX BRKT	91010	$41.00	Toolbox Brkts 21" (pr) 30103,104,105,106,107,108,109,511,117,118,119,111,126	27.5	6	3.5	13
TOOLBOX BRKT	91011	$41.00	Toolbox Brkts 21" (pr) 30201	27.5	6	3.5	13
TOOLBOX BRKT	91021	$41.00	Toolbox Brkts 21" (pr) 30221	27.5	6	3.5	13
TOOLBOX BRKT	91012	$41.00	Toolbox Brkts 21" (pr) 30102	27.5	6	3.5	13
TOOLBOX BRKT	91013	$41.00	Toolbox Brkts 21" (pr) 30112	27.5	6	3.5	13
TOOLBOX BRKT	91014	$41.00	Toolbox Brkts 21" (pr) 30317	27.5	6	3.5	13
TOOLBOX BRKT	91023	$41.00	Toolbox Brkts 21" (pr) 30123	27.5	6	3.5	13
TOOLBOX BRKT	91024	$41.00	Toolbox Brkts 21" (pr) 30327	27.5	6	3.5	13
TOOLBOX BRKT	91010-31	$45.00	Toolbox Brkts 31" (pr) 30105,106,107,108,109,111,117,119,113,126	37	6.5	4	18
TOOLBOX BRKT	91010-C	$41.00	Toolbox Brkts 21" (pr) 30104,113,116	27.5	6	3.5	13
TOOLBOX BRKT	91011-31	$45.00	Toolbox Brkts 31" (pr) 30201	37	6.5	4	18
TOOLBOX BRKT	91021-31	$45.00	Toolbox Brkts 31" (pr) 30221	37	6.5	4	18

Buyers Products Company * 9049 Tyler Blvd. * Mentor, OH 44060 *
*** F.O.B. Mentor, Ohio * $25.00 Minimum Order**

Price List in Effect on 12/1/2016 * For ALL Items in Catalogs * Marking NEW Pricing on Items Changed Since 11/1/2016

New	Combine	Category	Part	Weight	U of M	Description	Column1 List Price
	N	543	0091015	1.72	EA	COUPLER,CAST ADJ, REPAIR KIT	23.70
	N	534	0091050	2.56	EA	COUPLER,1-7/8in,2inCHANNEL,200LB TONGUE	11.25
	N	534	0091050Z	3.00	EA	COUPLER,1-7/8in,2inCHANNEL,ZINC CLEAR	12.20
	N	534	0091052	2.90	EA	COUPLER,1-7/8in,2-1/2inCHANNEL,200LB	12.70
	N	534	0091055	2.66	EA	COUPLER,1-7/8in,3inCHANNEL,200LB	13.30
	N	534	0091058	4.00	EA	COUPLER,2in BALL,2in CHANNEL 3500 LB CAP	19.20
	N	534	0091058Z	4.00	EA	*DISCONTINUED* COUPLER,2inBALL,2in	20.40
	N	534	0091060	4.38	EA	COUPLER,2in,2-1/2inCHANNEL,300LB TONGUE	18.85
	N	534	0091060Z	4.38	EA	COUPLER,2in,2-1/2inCHANNEL,300LB TONGUE	
	N	534	0091061	4.38	EA	COUPLER,2in,2-1/2inCHANNEL,300LB TONGUE	14.80
	N	534	0091065	4.50	EA	COUPLER,2in,3in CHANNEL,300 LB TONGUE	18.75
	N	534	0091091	6.70	EA	COUPLER, 2in A-FRAME	25.75
	N	534	0091097	8.38	EA	COUPLER,A-FRAME,2-5/16in,10,000 LB MGVW,	33.25
	N	533	0091205	10.74	EA	JACK,SWIVEL,TOP WIND,10inTRVL,PIPE MNT	41.98
	N	533	0091210	11.82	EA	JACK,SWIVEL,TOP WIND,10inTRVL,BRKT MNT	42.60
	N	533	0091215	14.22	EA	JACK,SWIVEL,TOP WIND,15inTRVL,PIPE MNT	55.82
	N	533	0091220	13.26	EA	JACK,SWIVEL,SIDE WIND,10inTRVL,PIPE MNT	57.34
	N	533	0091225	14.88	EA	JACK,SWIVEL,TOP WIND,15in TRVL,BRKT MNT	51.52
	N	533	0091260	12.78	EA	JACK,A-FRAME,TOP WIND,15in TRVL,2,000#	40.92
	N	533	0091261	11.44	EA	JACK ONLY,A-FRAME,TOP WIND,15inTRAVEL	32.26
	N	533	0091265	12.84	EA	JACK,A-FRAME,TOP WIND,15inTRVL,5,000#	40.95
	N	533	0091266	12.24	EA	JACK ONLY,A-FRAME,TOP WIND,15in TRAVEL,	38.50
	N	533	0091310	22.00	EA	JACK,SQ 2-1/2in TUBE,TOP WIND,26in TRVL,	85.60
	N	533	0091340	23.50	EA	JACK,SQ 2-1/2in TUBE,SIDE WIND,26in TRVL	93.75
	N	533	0091405H	3.40	EA	HANDLE,CRANK,4inSIDE WIND JACK,BK,W/CLIP	11.40
	N	533	0091410	61.00	EA	JACK,HD,SIWD,4inSQ,SPR RTN W/SIDE BOTTOM	169.30
	N	533	0091410H	64.40	EA	JACK,HD SIWD,SPR RTN,W/SIDE PIN,W/HDL	179.55
	N	533	0091415	61.00	EA	JACK,HD,SIWD,4in SQ,SPR RTN W/FRONT	169.30
	N	533	0091415H	64.40	EA	JACK,HD SIWD,SPR RTNN,W/FRONT PIN,W/HDL	179.55

Buyers Products Company * 9049 Tyler Blvd. * Mentor, OH 44060 *
*** F.O.B. Mentor, Ohio * $25.00 Minimum Order**

Price List in Effect on 12/1/2016 * For ALL Items in Catalogs * Marking NEW Pricing on Items Changed Since 11/1/2016

	N	543	0091540	13.90	EA	COUPLER,2in 10000# CAP CAST STEEL	100.06
	N	543	0091543	22.40	EA	COUPLER,2in ASSY W/3 POSTITION CHANNEL,	99.80
	N	543	0091545	27.20	EA	COUPLER,2in ASSY W/5 POS CHANNEL	134.66
	N	543	0091550	14.00	EA	COUPLER,2-5/16in 15000# CAP CAST STEEL	102.56
	N	543	0091553	21.50	EA	COUPLER,2-5/16in ASSY W/3 POS CHANNEL	125.92
	N	543	0091555	26.20	EA	COUPLER,2-5/16in W/5 POS CHANNEL	136.84
	N	543	0091558	12.00	EA	COUPLER,2-5/16in W/4 HOLE BRACKET	126.60
	N	543	0091560	18.50	EA	COUPLER,2in 10K# CAP CAST STL W/3in	119.90
	N	543	0091562	18.30	EA	COUPLER,2-5/16in 15K# CAP CAST STL W/3IN	123.00
	N	534	0091595	25.00	EA	COUPLER,2-5/16 A-FRAME BLACK	145.40
	N	533	0091610	14.00	EA	JACK,TRAILER,SWING-AWAY MARINE,TRVL 10in	53.40
	N	533	0093500	25.00	EA	JACK,3,500 LB,12 VOLT ELECTRIC,BLACK	211.60
	N	548	01055	5.82	EA	TIE DOWN,HD,RATCHET,2inX27ft	27.60
	N	520	01070	2.00	EA	TIE DOWN,E-TRACK,2inX12ft,CAM BUCKLE	12.90
	N	520	01075	2.20	EA	TIE DOWN,E-TRACK,2inX12ftRATCHET W/FTNGS	13.10
	N	520	01076	2.31	EA	TIE DOWN,E-TRACK,2inX16ftRATCHET W/FTNGS	14.50
	N	520	01077	2.40	EA	TIE DOWN,E-TRACK,2inX20ftRATCHET W/FTNGS	15.95
	N	520	01080	0.36	EA	ROPE RING,E-TRACK FITTING,WLL 1,000#	3.95
	N	520	01090	0.52	EA	ROPE RING, E-TRACK FITTING,1-1/2in OD W/	4.80
	N	520	01091	1.14	EA	ROPE RING, w/360 DEGREE E-TRACK SWIVEL	10.70
	N	520	01100	1.00	EA	BOARD HOLDER,E-TRACK FITTING HOLDS 2X4 &	4.75
	N	520	01120	0.89	EA	J-HOOK,ETRACK, 4.25in ID, ROUND, WHITE	7.99
	N	520	01130	0.50	EA	J-HOOK, E-TRACK 2.00in ID, SQUARE, WHITE	7.60
	N	890	02005	0.55	EA	CLAM SHELL B20, (4PC/PK,10PK/CS)WLL 800#	6.60
	N	890	02010	0.51	EA	CLAM SHELL B23 (4PC/PK, 10PK/CS)WLL 400#	6.80
	N	890	02020	1.74	EA	CLAM SHELL B601U, (4PC/PK, 10PK/CS)	11.70
	N	890	02030	1.29	EA	CLAM SHELL B801A, (1PC/PK, 10PK/CS)	7.98
	N	890	02040	1.03	EA	CLAM SHELL B38ZY, (1 PC/PK, 5PK/CS)	12.05
	N	890	02050	1.84	EA	CLAM SHELL B40 W/BRKT, (1PC/PK, 10PK/CS)	13.60
	N	890	02055	4.79	EA	CLAM SHELL B50 W/BRKT, (1PC/PK, 10PK/CS)	24.15
	N	890	03010	0.76	EA	CLAM SHELL WJ201A, (2PC/PK, 10PK/CS)	9.80

Buyers Products Company * 9049 Tyler Blvd. * Mentor, OH 44060 *
*** F.O.B. Mentor, Ohio * $25.00 Minimum Order**

Price List in Effect on 12/1/2016 * For ALL Items in Catalogs * Marking NEW Pricing on Items Changed Since 11/1/2016

	N	890	03015	0.73	EA	CLAM SHELL WJ201U, (2PC/PK, 10PK/CS)	9.80
	N	890	03020	0.54	EA	CLAM SHELL WJ206, (1PC/PK, 5PK/CS)	10.50
	N	890	03025	0.57	EA	CLAM SHELL WJ208, (1PC/PK, 5 PK/CS)	13.20
	N	890	03030	0.55	EA	CLAM SHELL WJ211, (1PC/PK, 5PK/CS)	25.10
	N	890	04005	0.60	EA	CLAM SHELL B2394L, (1PC/PK, 10PK/CS)	10.90
	N	890	04010	0.64	EA	CLAM SHELL B2392L, (1PC/PK, 10PK/CS)	9.60
	N	890	04025	1.10	EA	CLAM SHELL L1883/19CH545,1SET/PK,10PK/CS	24.00
	N	890	04035	1.24	EA	CLAM SHELL L3885/39LL71(1SET/PK,10PK/CS)	28.50
	N	890	06005	0.58	EA	CLAM SHELL B2373W, (1PC/PK, 5PK/CS)	4.80
	N	890	06010	0.82	EA	CLAM SHELL B2374GZ, (1PC/PK, 10PK/CS)	4.25
	N	890	06015	2.06	EA	CLAM SHELL B2585BZ, (1SET/PK, 10PK/CS)	12.20
	N	890	06020	2.10	EA	CLAM SHELL B2591BZ, (1SET/PK, 10PK/CS)	11.40
	N	890	06025	1.59	EA	CLAM SHELL B2588BZ, (1SET/PK, 10PK/CS)	9.10
	N	890	06030	1.55	EA	CLAM SHELL B2589BZ, (1SET/PK, 10PK/CS)	9.10
	N	890	06035	1.12	EA	CLAM SHELL B2595LKB, (1SET/PK, 10PK/CS)	10.00
	N	526	1	0.51	EA	BAR,LATCH	3.10
	N	634	1000	0.06	EA	CLAMP,HOSE 1in, 13/32 HOLE	0.55
	Y	110	10025372	15.24	EA	SHAFT 1in RD 1/4in KW x 6ft	91.00
	N	525	10035	9.34	EA	PINTLE HOOK, PH5, 5TON	58.44
	N	525	10038	9.57	EA	PINTLE HOOK, RIGID MNT,8 TON(PH8)W/MNT	59.98
	N	525	10040	11.36	EA	PINTLE HOOK, PH15, 15 TON W/MOUNT KIT	82.01
	N	525	10042	14.24	EA	PINTLE HOOK,PH20,20 TON W/MNT KIT	107.10
	Y	521	10045	13.96	EA	HITCH,BH8 W/1-7/8inBALL+MNT(1/BX,5BX/CS)	114.15
	Y	521	10050	14.20	EA	HITCH, BH8 W/2in BALL+MNT	114.15
	Y	521	10052	20.30	EA	HITCH,BH10 W/2in BALL+MNT	158.90
	Y	521	10055	14.74	EA	HITCH, BH8W/2-5/16in BALL+MNT	118.50
	Y	521	10057	21.00	EA	HITCH,BH10 W/2-5/16in BALL+MNT	167.30
	Y	110	1121272	22.38	EA	SHAFT 1-1/8in HEX x 6ft , +6in./-1in.	79.25
	N	090	1148	1.49	EA	FITTING,GREASE ASRTMNT 100 PCS	36.80
	Y	020	11840H	1.70	EA	1310 SLIP YOKE,1-1/8in HEX	33.40
	N	290	1207R	0.09	EA	FITTING,BULKHEAD,3/8in-24,.250 CONDUIT	3.45
	N	290	1220R	0.05	EA	CLAMP,CONDUIT KIT 1/2-20 THD.375 CONDUIT	5.85
	N	290	1238	0.03	EA	FITTING,BULKHEAD, 3/8-24 THD.375 CONDUIT	3.90
	N	290	1250	0.03	EA	CHAIN & EYELET THROTTLE KIT,6in	4.48
	Y	110	12531372	25.02	EA	SHAFT 1-1/4in RD 5/16in KW x 6 ft	152.60

Buyers Products Company * 9049 Tyler Blvd. * Mentor, OH 44060 *
*** F.O.B. Mentor, Ohio * $25.00 Minimum Order**

Price List in Effect on 12/1/2016 * For ALL Items in Catalogs * Marking NEW Pricing on Items Changed Since 11/1/2016

	Y	505	13006027	450.00	EA	LIFTGATE,1PC PICK UP TRUCK 60inW X 27inD	2,590.00
	Y	505	13006039	500.00	EA	LIFTGATE, 2PC PICK UP TRUCK 60inWX 39inD	2,790.00
	N	900	1304719	0.96	EA	SOLENOID,12V,MOTOR RELAY,INTERMITTENT	28.41
	N	900	1306070	0.68	EA	MOTOR SOLENOID,REPLACES MEYER #15370	11.32
	N	900	1306300	0.68	EA	SOLENOID,GROUND TO ACTIVATE	11.55
	N	600	1306317	0.85	EA	SOLENOID,12V,MOTOR RELAY,CONTINUOUS	27.00
	N	900	1306505	0.83	EA	SOLENOID,STEEL,GROUND-ACTIVATE	17.42
	N	900	1306510	0.91	EA	SOLENOID,STEEL,POSITIVE-ACTIVATE	15.25
	N	900	1306515	0.97	EA	SOLENOID,STEEL,12V,CONTINUOUS DUTY,	15.45
	N	900	1306600	0.76	EA	SOLENOID,GROUNDED, REVERSING POLARITY	61.50
	N	900	1308103	0.72	PR	MARKER,NYLON,ORANGE 24in STUD MOUNT	35.00
	N	900	1308105	0.80	PR	MARKERS,NYLON,FLUORESCENT ORANGE,28in	37.70
	N	900	1308106	0.68	PR	MARKER,NYLON,ORANGE,28in,STUD MOUNT	41.31
	N	900	1308107	0.68	PR	MARKER,NYLON,HEAVY DUTY,FLUORESCENT	40.60
	N	900	1308110	1.00	PR	MARKERS,NYLON,FLUORESCENT ORANGE,36in	39.48
	N	900	1308111	0.98	PR	MARKER,NYLON,ORANGE,36in,STUD MOUNT	46.17
	N	900	1308115	1.06	PR	MARKERS,NYLON,FLUORESCENT ORANGE,48in	54.15
	N	900	1308125	0.36	PR	ADAPTOR KIT, HORIZONTAL,REPLACES #B202H	9.25
	N	900	1308150	1.50	PR	MARKER KIT,HIGHWAY,1 PAIR,24in,	34.45
	N	900	1308160	1.85	PR	MARKER KIT,HIGHWAY,1 PAIR,36in,ORANGE	42.25
	N	900	1311100	10.45	EA	LIGHT KIT, SAM UNIVERSAL W/HARNESS	214.98
	N	900	1311103	0.02	EA	BULB, PARK/TURN, AMBER	3.06
	N	900	1311110	1.09	EA	ADAPTER,HEADLIGHT,INTERNATIONAL 08THJ	104.00
	N	080	14	0.01	EA	SCREW,SET 1/4-20x3/4inNC SQR HD	0.80
	N	562	1492100	1.35	EA	LIGHT,UTILITY	18.00
	N	562	1492106	0.47	EA	BRACKET, FLOOD/SPOT, SST, .50in HOLE	9.90
	N	562	1492107	0.90	EA	BRACKET, LIGHT, MOUNT, SST	24.90
	N	562	1492110	1.63	EA	LIGHT,FLOOD,12-24 VDC,54 LED,CLEAR,ROUND	45.80
	N	562	1492111	1.50	EA	LIGHT,SPREADR,12-24VDC,54LED,AMBER,ROUND	47.80
	N	562	1492112	1.80	EA	LIGHT,FLOOD,12-24 VDC,6 LED,CLEAR ROUND	63.90
	N	562	1492113	1.41	EA	LIGHT,FLOOD,12-24 VDC,6 LED,CLEAR,OVAL	63.98

Buyers Products Company * 9049 Tyler Blvd. * Mentor, OH 44060 *
*** F.O.B. Mentor, Ohio * $25.00 Minimum Order**

Price List in Effect on 12/1/2016 * For ALL Items in Catalogs * Marking NEW Pricing on Items Changed Since 11/1/2016

	N	562	1492114	1.43	EA	LIGHT,FLOOD, 12-24 VDC,9 LED,CLEAR,ROUND	75.60
***	N	562	1492115	1.55	EA	LIGHT,FLOOD,12-24 VDC, 6 LED,CLEAR,ROUND	48.50
	N	562	1492116	1.20	EA	LIGHT,SPREADR,12-24VDC,6 LED,AMBER,ROUND	59.70
	N	562	1492117	1.20	EA	LIGHT,FLOOD,12-24 VDC,5 LED,CLEAR,SQUARE	57.70
	N	562	1492118	1.75	EA	LIGHT,FLOOD,12-24 VDC,6 LED,CLEAR,	67.95
	N	562	1492119	1.76	EA	LIGHT,FLOOD,12-24 VDC,9 LED,CLEAR,SQUARE	75.60
	N	562	1492120	2.25	EA	LIGHT,FLOOD,12-24 VDC,12 LED,CLEAR,ROUND	136.90
	N	562	1492121	2.25	EA	LIGHT,SPOT,12-24 VDC, 12 LED,CLEAR,ROUND	136.90
	N	562	1492125	2.33	EA	LIGHT,FLOOD,12-24 VDC, 6 LED,CLEAR,ROUND	144.90
	N	562	1492126	2.41	EA	LIGHT,SPOT, 12-24 VDC, 6 LED,CLEAR,ROUND	144.90
	N	562	1492127	1.49	EA	LIGHT,FLOOD,12-24 VDC,14 LED,CLEAR,ROUND	89.98
	N	562	1492128	1.66	EA	LIGHT,FLOOD,12-24 VDC,16 LED,CLEAR,	94.90
	N	562	1492129	1.00	EA	LIGHT,FLOOD,12-24 VDC,4 LED,CLEAR,SQUARE	44.65
	N	562	1492130	2.50	EA	LIGHT,FLOOD,12-24 VDC, 6 LED,CLEAR,ROUND	71.00
	N	562	1492134	1.12	EA	LIGHT,SPOT,12-24VDC,9-LED,CLEAR,SQUARE	65.94
	N	562	1492135	1.60	EA	LIGHT,FLOOD,12-24 VDC,6 LED,CLEAR,	59.70
	N	562	1492136	0.65	EA	LIGHT,FLOOD,12-24 VDC,4 LED,CLEAR,SQUARE	59.80
	N	562	1492137	1.45	EA	LIGHT,FLOOD,12-24 VDC,6 LED,CLEAR,	63.90
	N	562	1492138	1.37	EA	LIGHT, FLOOD, 12-24VDC, 6 LED, CLEAR	67.90
	N	562	1492139	0.32	EA	LIGHT, FLOOD, 12-24VDC, 3 LED, CLEAR	44.65
	N	562	1492140	2.20	EA	LIGHTBAR,SPOT,12-24VDC,12LED,CLEAR,	139.00
	N	562	1492141	2.64	EA	LIGHTBAR,SPOT,12-24VDC,18 LED,CLEAR,	179.10
	N	562	1492142	3.30	EA	LIGHTBAR,SPOT,12-24VDC,24 LED,CLEAR,	198.90
	N	562	1492150	3.95	EA	LIGHTBAR,SPOT-FLOOD COMBO,12-24 VDC,12L	159.00
	N	562	1492151	5.90	EA	LIGHTBAR,SPOT-FLOOD COMBO,12-24VDC,24L	224.34
	N	562	1492152	7.88	EA	LIGHTBAR,SPOT-FLOOD COMBO,12-24VDC,36L	306.60
	N	562	1492153	9.75	EA	LIGHTBAR,SPOT-FLOOD COMBO,12-24VDC,48L	392.70
	N	562	1492160	3.34	EA	LIGHTBAR,SPOT-FLOOD COMBO,2RS,12-24VDC	143.30
	N	562	1492161	4.98	EA	LIGHTBAR,SPOT-FLOOD COMBO,2RS,12-24VDC	199.00

Buyers Products Company * 9049 Tyler Blvd. * Mentor, OH 44060 *
*** F.O.B. Mentor, Ohio * $25.00 Minimum Order**

Price List in Effect on 12/1/2016 * For ALL Items in Catalogs * Marking NEW Pricing on Items Changed Since 11/1/2016

	N	562	1492162	7.34	EA	LIGHTBAR,SPOT-FLOOD COMBO,2RS,12-24VDC	290.50
	N	562	1492163	10.15	EA	LIGHTBAR,SPOT-FLOOD COMBO,2RS,12-24VDC	418.30
	N	562	1492165	15.42	EA	LIGHTBAR,SPOT-FLOOD COMBO,2RS,12-24VDC	629.60
	N	562	1492171	4.93	EA	LIGHTBAR,SPOT-FLOOD COMBO,2RC,12-24VDC	288.90
	N	562	1492172	7.29	EA	LIGHTBAR,SPOT-FLOOD COMBO,2RC,12-24VDC	341.00
	N	562	1492175	15.51	EA	LIGHTBAR,SPOT-FLOOD COMBO,2RC,12-24VDC	724.30
	N	562	1492182	3.70	EA	LIGHTBAR,SPOT-FLOOD COMBO,1RS,12-24VDC	199.70
	N	562	1492183	5.45	EA	LIGHTBAR,SPOT-FLOOD COMBO,1RS,12-24VDC	280.90
	N	562	1492184	6.62	EA	LIGHTBAR,SPOT-FLOOD COMBO,1RS,12-24VDC	334.50
	N	562	1492185	8.80	EA	LIGHTBAR,SPOT-FLOOD COMBO,1RS,12-24VDC	429.00
	N	562	1492190	1.60	EA	LIGHT,FLOOD,12-24VDC,15 LED,CLEAR,RECT	94.90
	N	562	1492191	1.23	EA	LIGHT,FLOOD,12-24VDC,6-LED,CLEAR,	63.00
	N	562	1492215	1.20	EA	LIGHT,SPOT, 12-24 VDC, 6 LED,CLEAR,	57.70
	N	562	1492218	1.75	EA	LIGHT,SPOT,12-24 VDC,6 LED,CLEAR,	67.95
	N	562	1492237	1.45	EA	LIGHT,SPOT,12-24 VDC,6 LED,CLEAR,	63.90
	N	562	1492290	1.60	EA	LIGHT,SPOT,12-24VDC,15 LED,CLEAR,RECT	94.90
	N	562	1493118	1.75	EA	LIGHT,FLOOD,12-24 VDC,6 LED,CLEAR,	67.95
	N	562	1493215	1.20	EA	LIGHT,FLOOD,12-24 VDC, 6 LED,CLEAR,	57.70
	N	562	1493218	1.75	EA	LIGHT,SPOT,12-24 VDC,6 LED,CLEAR,	67.95
	Y	540	1501100	144.00	EA	LADDER RACK,STEEL,BLACK WRINKLE POWDER	580.90
	Y	540	1501105	18.00	EA	SCREEN,WINDOW,LADDER RACK	181.55
	Y	540	1501110	15.00	EA	SCREEN,WINDOW,LADDER RACK,BLACK	181.55
	Y	540	1501193	3.60	EA	WIND DEFLECTOR,LADDER RACK,BLACK	45.52
	Y	540	1501200	155.00	EA	LADDER RACK,UTILITY BODY,STEEL BLACK	823.75
	Y	540	1501210	159.00	EA	LADDER RACK,UTILITY BODY,LONG BLACK	873.75
	Y	540	1501310	41.50	EA	LADDER RACK,STL,WHTE,VAN,GUTTER MNT	194.70
	Y	540	1501311	23.00	EA	LADDER RACK BAR,OPTIONAL,STL,WHT,VAN	97.36
	Y	110	15037372	36.00	EA	SHAFT 1-1/2in RD 3/8in KW x 6ft	232.68
	Y	531	1701000	14.31	EA	BRACKET,MOUNTING KIT FOR POLY 24/36	61.90
	Y	531	1701001	22.30	EA	BRACKET,MOUNTING KIT FOR POLY 48	94.80
	Y	531	1701005	23.81	EA	BRACKET,MOUNTING KIT,3inX18inX18,	85.60
	Y	531	1701005B	23.51	EA	BRACKET KIT,TOOLBOX MOUNT 18in BOLTED	104.95
	Y	531	1701006	16.17	EA	BRACKET,MOUNTING KIT,3inX18inX18	74.90

Buyers Products Company * 9049 Tyler Blvd. * Mentor, OH 44060 *
*** F.O.B. Mentor, Ohio * $25.00 Minimum Order**

Price List in Effect on 12/1/2016 * For ALL Items in Catalogs * Marking NEW Pricing on Items Changed Since 11/1/2016

	Y	531	1701006B	16.17	EA	BRACKET,MOUNTING KIT,3inX18inX18 BOLTED	94.95
	Y	531	1701010	26.92	EA	BRACKET,MOUNTING KIT,3inX18inX24,	103.50
	Y	531	1701010B	26.92	EA	BRACKET,MOUNTING KIT,3inX18inX24 BOLTED	114.00
	Y	531	1701011	19.06	EA	BRACKET,MOUNTING KIT,3inX18inX24	93.65
	Y	531	1701011B	19.14	EA	BRACKET,MOUNTING KIT, 24in BOLTED	103.20
	Y	531	1701015	32.00	EA	BRACKET,MOUNTING KIT,24inx24inx3in,	116.50
	Y	531	1701016	22.00	EA	BRACKET,MOUNTING KIT,3inX24inX24,BLACK	105.42
	Y	531	1701030	7.50	EA	BRACKET,MOUNTING KIT, ALUM,3inx18inx18	108.90
	Y	531	1701031	19.00	EA	BRACKET,MOUNTING KIT,SST,3inx18inx18	181.50
	Y	531	1701040	10.00	EA	BRACKET,MOUNTING KIT, ALUM,3inx24inx24	124.90
	Y	531	1701041	22.00	EA	BRACKET,MOUNTING KIT,SST,3inx18inx24	210.75
	Y	530	1701280	51.00	EA	TOOLBOX, TRAILER TONGUE,BLACK POWDER	396.60
	Y	530	1701281	33.00	EA	TOOLBOX ,TRAILER TONGUE,BLACK POWDER	431.35
	Y	530	1701285	74.00	EA	TOOLBOX, TRAILER TONGUE,BLACK PWDR COAT	533.90
	Y	530	1701380	17.50	EA	TOOLBOX,ALUMINUM TRAILER TONGUE,	439.55
	Y	530	1701385	28.00	EA	TOOLBOX,ALUMINUM,TRAILER TONGUE,F37	502.35
	Y	530	1701551	78.00	EA	TOOLBOX,ALUMINUM,TOPSIDE,16X13X72 ,DBL DR	788.35
	Y	530	1701556	89.00	EA	TOOLBOX,ALUMINUM,TOPSIDE,16X13X88 ,DBL DR	891.44
	Y	530	1701561	92.00	EA	TOOLBOX,ALUMINUM,TOPSIDE,16X13X96 ,DBL DR	905.01
	Y	530	1701565	90.00	EA	TOOLBOX, XL TOPSIDE,ALUM18X16X90,DBL DR,	1,060.65
	Y	530	1701568	103.00	EA	TOOLBOX, XL TOPSIDE,ALUM18X16X96,DBL DR,	1,033.50
	Y	530	1701679	21.00	EA	TOOLBOX,TRAILER TONGUE,WHITE,F18,B36	199.85
	Y	530	1701680	21.00	EA	TOOLBOX,TRAILER TONGUE,BLACK,F18,B36	189.85
	Y	530	1702100	57.00	EA	TOOLBOX,18X18X24,SST RTRY PADDLE,BLACK	323.35
	Y	530	1702103	67.00	EA	TOOLBOX,18X18X30,SST RTRY PADDLE,BLACK	342.75
	Y	530	1702105	80.00	EA	TOOLBOX,18X18X36,SST RTRY PADDLE,BLACK	407.95
	Y	530	1702110	104.00	EA	TOOLBOX,18X18X48,2-SST RTRY PADDLE,BLACK	489.45
	Y	530	1702115	125.00	EA	TOOLBOX,18X18X60,2-SST RTRY PADDLE,BLACK	581.55
	Y	530	1702200	57.00	EA	TOOLBOX,18X18X24,SST RTRY PADDLE,WHITE	339.50
	Y	530	1702203	67.00	EA	TOOLBOX,18X18X30,SST RTRY PADDLE,WHITE	359.90

Buyers Products Company * 9049 Tyler Blvd. * Mentor, OH 44060 *
*** F.O.B. Mentor, Ohio * $25.00 Minimum Order**

Price List in Effect on 12/1/2016 * For ALL Items in Catalogs * Marking NEW Pricing on Items Changed Since 11/1/2016

	Y	530	1702205	80.00	EA	TOOLBOX,18X18X36,SST RTRY PADDLE,WHITE	428.30
	Y	530	1702210	104.00	EA	TOOLBOX,18X18X48,2-SST RTRY PADDLE,WHITE	513.90
	Y	530	1702215	126.00	EA	TOOLBOX,18X18X60,2-SST RTRY PADDLE,WHITE	610.60
	Y	530	1702235	63.00	EA	TOOLBOX,ALUMINUM BARN DR,24X24X36,W/	831.75
	Y	530	1702240	76.00	EA	TOOLBOX,ALUMINUM BARN DR,24X24X48, W/	837.30
	Y	530	1702250	90.50	EA	TOOLBOX,ALUMINUM BARN DR,24X24X60, W/	1,035.83
	Y	530	1702295	47.00	EA	TOOLBOX,18HX18DX18L,SST T-HDL,BLACK	323.35
	Y	530	1702300	56.00	EA	TOOLBOX,18X18X24,SST T-HDL,BLACK POWDER	323.35
	Y	530	1702303	67.00	EA	TOOLBOX,18X18X30,SST T-HDL,BLACK POWDER	342.75
	Y	530	1702305	80.00	EA	TOOLBOX,18X18X36,SST T-HDL,BLACK POWDER	407.95
	Y	530	1702310	104.00	EA	TOOLBOX,18X18X48, (2) SST T-HDLS,BLACK	489.45
	Y	530	1702315	125.00	EA	TOOLBOX,18X18X60,(2) SST T-HDLS,BLACK	581.55
	Y	530	1702317	170.00	EA	TOOLBOX,18X18X66,(2)SST FLDG T-HDL,BLACK	863.55
	Y	530	1702325	151.00	EA	TOOLBOX,18X18X72,UNDBDY,SST T-HDL BLACK	978.75
	Y	530	1702400	57.00	EA	TOOLBOX,18X18X24,SST T-HDL,WHITE POWDER	339.50
	Y	530	1702403	67.00	EA	TOOLBOX,18X18X30,SST T-HDL,WHITE POWDER	359.90
	Y	530	1702405	82.00	EA	TOOLBOX,18X18X36,SST T-HDL,WHITE POWDER	428.30
	Y	530	1702410	106.00	EA	TOOLBOX,18X18X48,(2)SST T-HDLS,WHITE	513.90
	Y	530	1702415	126.00	EA	TOOLBOX,18X18X60,(2) SST-T-HDLS,WHITE	610.60
	Y	530	1702417	173.00	EA	TOOLBOX,18X18X66,(2)SST FLDG T-HDL WHITE	906.75
	Y	530	1702500	51.00	EA	TOOLBOX,18X18X24,AL DT BKDR,DIE CAST LCH	323.35
	Y	530	1702503	62.00	EA	TOOLBOX,18X18X30,AL DT BKDR,DIE CAST LCH	371.28
	Y	530	1702505	69.00	EA	TOOLBOX,18X18X36,AL DT BKDR,DIE CAST LCH	407.95
	Y	530	1702510	88.00	EA	TOOLBOX,18X18X48,AL DT BKDR,DIE CAST LCH	489.45
	Y	530	1702595	51.50	EA	TOOLBOX,STAINLESS STEEL18X18X18,W/POL DR	696.40
	Y	530	1702600	61.50	EA	TOOLBOX,STAINLESS STEEL18X18X24,W/POL DR	696.40
	Y	530	1702603	72.50	EA	TOOLBOX,STAINLESS STEEL18X18X30,W/POL DR	830.80
	Y	530	1702605	85.00	EA	TOOLBOX,STAINLESS STEEL18X18X36,,W/POL	932.30

Buyers Products Company * 9049 Tyler Blvd. * Mentor, OH 44060 *
*** F.O.B. Mentor, Ohio * $25.00 Minimum Order**

Price List in Effect on 12/1/2016 * For ALL Items in Catalogs * Marking NEW Pricing on Items Changed Since 11/1/2016

	Y	530	1702610	98.00	EA	TOOLBOX,STAINLESS STEEL18X18X48 W/POL DR	1,128.90
	Y	530	1702650	48.00	EA	TOOLBOX 18X18X24 POL STAINLESS STEEL	367.20
	Y	530	1702653	57.00	EA	TOOLBOX 18X18X30 POL STAINLESS STEEL	429.30
	Y	530	1702655	65.00	EA	TOOLBOX 18X18X36 POL STAINLESS STEEL	474.90
	Y	530	1702660	79.50	EA	TOOLBOX 18X18X48 POL STAINLESS STEEL	598.70
	Y	530	1702700	54.50	EA	TOOLBOX,18X18X24,POL STNLS STL DR,BLACK	516.65
	Y	530	1702703	66.00	EA	TOOLBOX,18X18X30,POL STNLS STL DR,BLACK	562.95
	Y	530	1702705	78.50	EA	TOOLBOX,18X18X36,POL STNLS DR,BLACK PWD	592.30
	Y	530	1702710	101.50	EA	TOOLBOX,18X18X48,POL STNLS STL DR,BLACK	690.95
	Y	530	1702715	123.50	EA	TOOLBOX,18X18X60,POL STNLS STL DR,BLACK	799.80
	Y	530	1702725	151.00	EA	TOOLBOX,18X18X72,POL STNLS STL DRS,T-HDL	1,211.60
	Y	530	1702805	78.50	EA	TOOLBOX,18X18X36,POL STNLS STL DR,WHITE	626.20
	Y	530	1702810	100.50	EA	TOOLBOX,18X18X48,POL STNLS STL DR,WHITE	724.85
	Y	530	1702815	123.50	EA	TOOLBOX,18X18X60,POL STNLS STL DR,WHITE	927.75
	Y	530	1702840	118.00	EA	TOOLBOX,TOPSIDER,72in,SST T-HDL,WHITE	755.70
	Y	530	1702840TRAY	11.00	EA	CABINET TRAY FOR 72inTOPSIDER,WHITE	103.25
	Y	530	1702850	136.00	EA	TOOLBOX,TOPSIDER,88in,SST T-HDL,WHITE	837.05
	Y	530	1702850TRAY	14.00	EA	CABINET TRAY FOR 88inTOPSIDER,WHITE	128.00
	Y	530	1702860	147.00	EA	TOOLBOX,TOPSIDER,96in,SST T-HDL,WHITE	940.15
	Y	530	1702860TRAY	15.00	EA	CABINET TRAY FOR 96inTOPSIDER,WHITE	149.20
	Y	530	1702900	57.00	EA	TOOLBOX,18X18X24,SST T-HDL,PRIMED POWDER	339.50
	Y	530	1702905	80.00	EA	TOOLBOX,18X18X36,SST T-HDL,PRIMED POWDER	428.30
	Y	530	1702910	103.00	EA	TOOLBOX,18X18X48,(2)SST T-HDLS,PRIMED	513.90
	Y	530	1702940	118.00	EA	TOOLBOX,TOPSIDER,72in,SST T-HDL,BLACK	735.10
	Y	530	1702940TRAY	11.00	EA	CABINET TRAY FOR 72inTOPSIDER,BLACK	95.30
	Y	530	1702950	136.00	EA	TOOLBOX,TOPSIDER,88in,SST T-HDL,BLACK	814.25
	Y	530	1702950TRAY	14.00	EA	CABINET TRAY FOR 88inTOPSIDER,BLACK	112.90
	Y	530	1702960	151.00	EA	TOOLBOX,TOPSIDER,96in,SST T-HDL,BLACK	914.50

Buyers Products Company * 9049 Tyler Blvd. * Mentor, OH 44060 *
*** F.O.B. Mentor, Ohio * $25.00 Minimum Order**

Price List in Effect on 12/1/2016 * For ALL Items in Catalogs * Marking NEW Pricing on Items Changed Since 11/1/2016

	Y	530	1702960TRAY	15.00	EA	CABINET TRAY FOR 96inTOPSIDER,BLACK	116.55
	Y	530	1703100	47.00	EA	TOOLBOX,14HX16DX24L,SST RTRY PDL,BLACK	323.35
	Y	530	1703103	55.00	EA	TOOLBOX,14HX16DX30L,SST RTRY PDL,BLACK	342.75
	Y	530	1703150	40.00	EA	TOOLBOX,14HX12DX24L,SST RTRY PDL,BLACK	323.35
	Y	530	1703203	65.00	EA	TOOLBOX,14HX16DX30L,SST RTRY PDL,WHITE	365.35
	Y	530	1703300	46.00	EA	TOOLBOX,14HX16DX24L,SST T-HDL,BLACK	323.35
	Y	530	1703303	55.00	EA	TOOLBOX,14HX16DX30L,SST T-HDL,BLACK	342.75
	Y	530	1703305	67.00	EA	TOOLBOX,14HX16DX36L,SST T-HDL,BLACK	407.95
	Y	530	1703330	50.00	EA	TOOLBOX,16X14X18,SST T-HDL,BLACK POWDER	323.35
	Y	530	1703349	37.00	EA	TOOLBOX,14HX12DX18L,SST T-HDL,BLACK	323.35
	Y	530	1703350	40.00	EA	TOOLBOX,14HX12DX24L,SST T-HDL,BLACK	323.35
	Y	530	1703351	35.50	EA	TOOLBOX,SLANT,14HX12DX18L,SST T-HDL,BLK	398.95
	Y	530	1703352	39.00	EA	TOOLBOX,SLANT,14HX12DX24L,SST T-HDL,BLK	398.95
	Y	530	1703400	46.00	EA	TOOLBOX,14HX16DX24L,SST T-HDL,WHITE	345.95
	Y	530	1703403	55.00	EA	TOOLBOX,14HX16DX30L,SST-T-HDL,WHITE	365.35
	Y	530	1703405	67.00	EA	TOOLBOX,14HX16DX36L,SST T-HDL,WHITE	430.55
	Y	530	1703700	45.00	EA	TOOLBOX,14HX16DX24L,W/SST DR,T-HDL BLACK	516.65
	Y	530	1703703	53.00	EA	TOOLBOX,14HX16DX30L,W/SST DR,T-HDL,BLACK	562.95
	Y	530	1703705	66.00	EA	TOOLBOX,14HX16DX36L,W/SST DOOR,BLACK PWD	592.30
	Y	530	1703900	46.00	EA	TOOLBOX,14HX16DX24L,SST T-HDL,PRIMED	339.50
	Y	530	1704300	75.00	EA	TOOLBOX,24X24X24,SST T-HDL,BLACK POWDER	575.25
	Y	530	1704303	92.00	EA	TOOLBOX,24X24X30,SST T-HDL,BLACK POWDER	600.30
	Y	530	1704305	109.00	EA	TOOLBOX,24X24X36,SST T-HDL,BLACK POWDER	696.20
	Y	530	1704310	141.00	EA	TOOLBOX,24X24X48,(2) SST T-HDL,BLACK	796.30
	Y	530	1704315	167.00	EA	TOOLBOX,24X24X60,(2) SST T-HDLS,BLACK	924.30
	Y	530	1704400	80.00	EA	TOOLBOX,24X24X24,SST T-HDL,WHITE POWDER	609.75
	Y	530	1704403	93.00	EA	TOOLBOX,24X24X30,SST T-HDL,WHITE POWDE	636.30
	Y	530	1704405	110.00	EA	TOOLBOX,24X24X36,SST T-HDL WHITE POWDER	738.00

Buyers Products Company * 9049 Tyler Blvd. * Mentor, OH 44060 *
*** F.O.B. Mentor, Ohio * $25.00 Minimum Order**

Price List in Effect on 12/1/2016 * For ALL Items in Catalogs * Marking NEW Pricing on Items Changed Since 11/1/2016

	Y	530	1704410	139.00	EA	TOOLBOX,24X24X48,(2) SST T-HDL,WHITE	844.05
	Y	530	1704415	168.00	EA	TOOLBOX,24X24X60,(2) SST T-HDLS,WHITE	979.80
	Y	530	1704705	105.50	EA	TOOLBOX,24X24X36,POL STNLS STL DR,BLACK	607.25
	Y	530	1704710	134.00	EA	TOOLBOX,24X24X48,POL STNLS STL DR,BLACK	638.50
	Y	530	1704715	163.00	EA	TOOLBOX,24X24X60,POL STNLS STL DR,BLACK	822.25
	Y	530	1705100	32.50	EA	TOOLBOX,ALUMINUM,18X18X24,REC DR T-HDL	457.70
	Y	530	1705101	30.00	EA	TOOLBOX,ALUMINUM,18X18X18,REC DR,T-HDL	453.15
	Y	530	1705103	38.50	EA	TOOLBOX,ALUMINUM,18X18X30,REC DR T-HDL	486.30
	Y	530	1705105	43.00	EA	TOOLBOX,ALUMINUM,18X18X36,REC DR T-HDL	549.25
	Y	530	1705110	56.50	EA	TOOLBOX,ALUMINUM,18X18X48,REC DR T-HDL	717.74
	Y	530	1705115	66.00	EA	TOOLBOX,ALUMINUM,18X18X60,REC DR T-HDL	747.30
	Y	530	1705118	46.00	EA	TOOLBOX,ALUMINUM,36x20x20,REC DR T-HDL	677.00
	Y	530	1705120	63.50	EA	TOOLBOX,ALUMINUM,18X24X48,REC DR, T-HDL	797.75
	Y	530	1705130	45.00	EA	TOOLBOX,ALUMINUM,24X24X24,REC DR T-HDL	599.88
	Y	530	1705133	52.00	EA	TOOLBOX,ALUMINUM,24X24X30,REC DR T-HDL	687.88
	Y	530	1705135	59.50	EA	TOOLBOX,ALUMINUM,24X24X36,REC DR T-HDL	714.84
	Y	530	1705148	21.00	EA	TOOLBOX,ALUMINUM,14X12X16,T-HANDLE	395.90
	Y	530	1705149	19.00	EA	TOOLBOX,ALUMINUM,14X12X18,T-HANDLE	399.90
	Y	530	1705150	26.00	EA	TOOLBOX,ALUMINUM,14X12X24,T-HANDLE	413.35
	Y	530	1705153	26.00	EA	TOOLBOX,ALUMINUM,14X12X30,T-HANDLE	478.60
	Y	530	1705160	25.00	EA	TOOLBOX,ALUMINUM,14X16X24,T-HANDLE	429.35
	Y	530	1705180	40.00	EA	TOOLBOX 24HX28DX12W,ALUM,STEPBOX W/SST	599.20
	Y	530	1705181	46.00	EA	TOOLBOX 24HX28DX18W,ALUM,STEPBOX W/SST-T	660.60
	Y	530	1705182	56.00	EA	TOOLBOX 24HX28DX24W,ALUM,STEPBOX W/SST-T	728.42
	Y	530	1705183	66.00	EA	TOOLBOX 24HX28DX30W,ALUM,STEPBOX W/SST	791.25
	Y	530	1705190	32.00	EA	TOOLBOX,9 x 22 x30 ,ALUMINUM,BETWEEN	349.90
	Y	530	1705200	32.50	EA	TOOLBOX,ALUMINUM,18X18X24,L SWG REC DR	497.75

Buyers Products Company * 9049 Tyler Blvd. * Mentor, OH 44060 *
*** F.O.B. Mentor, Ohio * $25.00 Minimum Order**

Price List in Effect on 12/1/2016 * For ALL Items in Catalogs * Marking NEW Pricing on Items Changed Since 11/1/2016

	Y	530	1705201	28.00	EA	TOOLBOX,ALUMINUM,18X18X18,L SWG REC DR	445.75
	Y	530	1705203	38.00	EA	TOOLBOX,ALUMINUM,18X18X30,L SWG REC DR	535.10
	Y	530	1705205	45.50	EA	TOOLBOX,ALUMINUM,18X18X36,DBL BARN DR	599.35
	Y	530	1705210	56.00	EA	TOOLBOX,ALUMINUM,18X18X48,DBL BARN DR	681.05
	Y	530	1705215	66.50	EA	TOOLBOX,ALUMINUM,18X18X60,DBL BARN DR	806.53
	Y	530	1705305	52.50	EA	TOOLBOX,ALUM SMOOTH,18X18X36,DBL BARN DR	591.80
	Y	530	1705310	64.50	EA	TOOLBOX,ALUM SMOOTH,18X18X48,DBL BARN DR	618.80
	Y	530	1705315	77.00	EA	TOOLBOX,ALUM SMOOTH,18X18X60,DBL BARN DR	699.70
	Y	530	1705333		EA	TOOLBOX, ALUM SMOOTH, 24X24X30,DBL BARN	683.50
	Y	530	1705335	73.00	EA	TOOLBOX,ALUM SMOOTH,24X24X36,DBL BARN DR	697.70
	Y	530	1705340	89.00	EA	TOOLBOX,ALUM SMOOTH,24X24X48,DBL BARN DR	718.75
	Y	530	1705345	99.00	EA	TOOLBOX,ALUM SMOOTH,24X24X60,DBL BARN DR	779.75
	Y	530	1705405	56.50	EA	TOOLBOX,ALUM SMOOTH,18X18X36,,XD,DBL	651.00
	Y	530	1705410	69.50	EA	TOOLBOX,ALUM SMOOTH,18X18X48,,XD,DBL	798.90
	Y	530	1705415	73.01	EA	TOOLBOX,ALUM SMOOTH,18X18X60,,XD,DBL	846.95
	Y	530	1705420	58.01	EA	TOOLBOX,ALUM SMOOTH,18X24X36,,XD,DBL	754.70
	Y	530	1705425	71.01	EA	TOOLBOX,ALUM SMOOTH,18X24X48,,XD,DBL	792.50
	Y	530	1705430	96.00	EA	TOOLBOX,ALUM SMOOTH,18X24X60,,XD,DBL	891.00
	Y	530	1705435	67.01	EA	TOOLBOX,ALUM SMOOTH,24X24X36,,XD,DBL	794.65
	Y	530	1705440	83.01	EA	TOOLBOX,ALUM SMOOTH,24X24X48,,XD,DBL	897.50
	Y	530	1705445	99.01	EA	TOOLBOX,ALUM SMOOTH,24X24X60,,XD,DBL	989.70
	Y	530	1705450	105.01	EA	TOOLBOX, ALUM,SMOOTH,24X24X72, XD	1,190.90
	Y	530	1705640	68.50	EA	TOOLBOX,ALUMINUM,TOPSIDER,72inCON TRACTOR	942.41
	Y	530	1705641	93.00	EA	TOOLBOX,ALUMINUM,TOPSIDER,72inCON TR W/	1,201.20
	Y	530	1705650	83.50	EA	TOOLBOX,ALUMINUM,TOPSIDER,88inCON TRACTOR	1,068.91
	Y	530	1705651	107.00	EA	TOOLBOX,ALUMINUM,TOPSIDER,88in CONTR W/	1,341.00
	Y	530	1705652	85.01	EA	TOOLBOX, ALUMINUM TOPSIDER,88in,CONTR	1,268.95
	Y	530	1705653	62.01	EA	TOOLBOX,ALUMINUM TOPSIDER,88in,CONTR	1,541.00

Buyers Products Company * 9049 Tyler Blvd. * Mentor, OH 44060 *
*** F.O.B. Mentor, Ohio * $25.00 Minimum Order**

Price List in Effect on 12/1/2016 * For ALL Items in Catalogs * Marking NEW Pricing on Items Changed Since 11/1/2016

	Y	530	1705660	88.50	EA	TOOLBOX,ALUMINUM,TOPSIDER,96inCON TRACTOR	1,073.22
	Y	530	1705662	91.01	EA	TOOLBOX, ALUMINUM TOPSIDER,96in,CONTR	1,273.25
	Y	530	1706400		EA	TOOLBOX, ALUM SMOOTH, 18X18X24, XD	591.80
	Y	530	1706403		EA	TOOLBOX, ALUM SMOOTH, 18X18X30, XD	633.50
	Y	530	1706405		EA	TOOLBOX, ALUM SMOOTH, 18X18X36, XD	673.00
	Y	530	1706410		EA	TOOLBOX, ALUM SMOOTH, 18X18X48, XD	784.90
	Y	530	1706415		EA	TOOLBOX, ALUM SMOOTH, 18X18X60, XD	832.88
	Y	530	1706420		EA	TOOLBOX, ALUM SMOOTH, 18X24X36, XD	740.70
	Y	530	1706425		EA	TOOLBOX, ALUM SMOOTH, 18X24X48, XD	778.50
	Y	530	1706430		EA	TOOLBOX, ALUM SMOOTH, 18X24X60, XD	877.00
	Y	530	1708310	119.00	EA	TOOLBOX,18X24X48,(2)SST T-HDLS,BLACK	796.30
	Y	530	1708410	124.00	EA	TOOLBOX,18X24X48,(2)SST T-HDLS,WHITE	844.04
	Y	530	1709305	75.00	EA	TOOLBOX,ALUMINUM,CROSS,SGL LID 18X20X71	807.75
	Y	530	1709308	77.00	EA	TOOLBOX,ALUMINUM,CROSS,SGL LID 23X20X71	976.26
	Y	530	1709315	101.00	EA	TOOLBOX,ALUMINUM,CROSS,SGL LID 18X27X71	909.70
	Y	530	1709318	91.00	EA	TOOLBOX,ALUMINUM,CROSS,SGL LID 23X27X71	1,359.45
	Y	530	1710305	67.00	EA	TOOLBOX,ALUMINUM,CROSS,GULL-WNG18X20X71	956.20
	Y	530	1710308	73.00	EA	TOOLBOX,ALUMINUM,CROSS,GULL-WNG 23X20X71	1,192.50
	Y	530	1710315	84.00	EA	TOOLBOX,ALUMINUM,CROSS,GULL-WNG18X27X71	1,012.50
	Y	530	1710318	85.00	EA	TOOLBOX,ALUMINUM,CROSS,GULL-WNG 23X27X71	1,359.45
	Y	530	1711010	23.00	EA	TOOLBOX,ALUMINUM,LO-SIDE,13X16X47	651.90
	Y	530	1711020	47.00	EA	TOOLBOX,ALUMINUM,LO-SIDE,13X16X56	683.11
	Y	530	1711025	52.00	EA	TOOLBOX,ALUMINUM,LO-SIDE,13X16X70	774.77
	Y	530	1711030	63.00	EA	TOOLBOX,ALUMINUM,LO-SIDE,13X16X87	862.41
	Y	530	1711205	26.00	EA	TOOLBOX,ALUMINUM,PORKCHOP,DS19 X 9-1/4X	564.50
	Y	530	1711206	26.00	EA	TOOLBOX,ALUMINUM,PORKCHOP,PS 19 X 9-1/4X	564.50
	Y	530	1712010	52.50	EA	TOOLBOX,ALUMINUM,CHEST,19X20X47,A LL PUR-	652.80
	Y	530	1712020	55.00	EA	TOOLBOX,ALUMINUM,CHEST,19X20X54,A LL PUR-	676.65

Buyers Products Company * 9049 Tyler Blvd. * Mentor, OH 44060 *
*** F.O.B. Mentor, Ohio * $25.00 Minimum Order**

Price List in Effect on 12/1/2016 * For ALL Items in Catalogs * Marking NEW Pricing on Items Changed Since 11/1/2016

	Y	530	1712030	60.00	EA	TOOLBOX,ALUMINUM,CHEST,19X20X60,ALL PUR-	705.65
	Y	530	1712035	74.00	EA	TOOLBOX,ALUMINUM,CHEST,19X27X60,ALL PUR-	878.55
	Y	530	1712110	73.50	EA	TOOLBOX,ALUMINUM,CHEST,24X24X48,JUMBO	983.20
	Y	530	1712120	92.00	EA	TOOLBOX,ALUMINUM,CHEST,30X30X48,JUMBO	1,150.05
	Y	530	1712200	0.01	EA	TOOLBOX,ALUM,20HX18DX24L W/DRAWER	709.50
	Y	530	1712205	65.00	EA	TOOLBX,ALUM,20HX18DX36L W/ DRAWER	767.00
	Y	530	1712210	85.00	EA	TOOLBX,ALUM,20HX18DX48L W/ DRAWER	899.92
	Y	530	1712230	16.00	EA	TOOLBOX,CHEST,POLY BK,32-1/8Lx14-7/8Wx	154.80
	Y	530	1712240	28.00	EA	TOOLBOX,CHEST,POLY BK,44-3/8Lx19Wx17-1/2	199.00
	Y	530	1712250	34.00	EA	TOOLBOX,CHEST,POLY BK,51LX19-5/8WX22-5/8	344.76
	Y	530	1712255	46.00	EA	TOOLBOX, CHEST, POLY, BLK, BOXED	393.45
	Y	530	1712260	52.00	EA	TOOLBOX,CHEST,POLY BK,76-1/2LX25WX22-5/8	666.18
	Y	530	1717100	24.00	EA	TOOLBOX, UNDERBODY,POLY,BK,18X18X24	269.04
	Y	530	1717105	31.00	EA	TOOLBOX, UNDERBODY,POLY,BK,18X18X36	311.28
	Y	530	1717110	42.00	EA	TOOLBOX, UNDERBODY,POLY,BK,18X18X48	354.30
	Y	530	1720305	67.00	EA	TOOLBOX,ALUM,GULL-WNG 18X20X71,BLACK	1,050.20
	Y	530	1720308	73.00	EA	TOOLBOX,ALUM,GULL-WNG 71X20X23,BLACK	1,292.48
	Y	530	1720315	84.00	EA	TOOLBOX,CROSS,GULL-WNG 71X27X18, BLACK	1,112.18
	Y	530	1720318	85.00	EA	TOOLBOX,CROSS,GULL-WNG 71X27X23, BLACK	
	Y	530	1721010	23.00	EA	TOOLBOX,ALUMINUM,LO-SIDE,13X16X47,BLACK	705.90
	Y	530	1721020	47.00	EA	TOOLBOX,ALUMINUM,LO-SIDE,13X16X56,BLACK	743.10
	Y	530	1721025	52.00	EA	TOOLBOX,ALUMINUM,LO-SIDE,13X16X70,BLACK	862.80
	Y	530	1721030	63.00	EA	TOOLBOX,ALUMINUM,BLACK,LO-SIDE,13X16X87	950.40
	Y	530	1721551	78.00	EA	TOOLBOX,ALUMINUM,TOPSIDE,16X13X72,BLK	862.80
	Y	530	1721556	89.00	EA	TOOLBOX,ALUMINUM,TOPSIDE,16X13X88,BLK	976.50
	Y	530	1721561	92.00	EA	TOOLBOX,ALUMINUM,TOPSIDE,16X13X96,BLK	1,003.60
	Y	530	1721565	90.00	EA	TOOLBOX, XL TOPSIDE,ALUM18X16X90,BLK	1,159.65
	Y	530	1721568	103.00	EA	TOOLBOX, XL TOPSIDE,ALUM18X16X96,BLK	1,147.70

Buyers Products Company * 9049 Tyler Blvd. * Mentor, OH 44060 *
*** F.O.B. Mentor, Ohio * $25.00 Minimum Order**

Price List in Effect on 12/1/2016 * For ALL Items in Catalogs * Marking NEW Pricing on Items Changed Since 11/1/2016

	Y	530	1725100	30.00	EA	TOOLBOX,ALUMINUM,18X18X24,BLK PDR COAT	527.70
	Y	530	1725101	27.00	EA	TOOLBOX,ALUMINUM,18X18X18,BLK PDR COAT	527.70
	Y	530	1725103	38.00	EA	TOOLBOX,ALUMINUM,18X18X30,BLK PDR COAT	560.30
	Y	530	1725105	42.00	EA	TOOLBOX,ALUMINUM,18X18X36,BLK PDR COAT	629.20
	Y	530	1725110	52.00	EA	TOOLBOX,ALUMINUM,18X18X48,BLK PDR COAT	807.75
	Y	530	1725115	70.00	EA	TOOLBOX,ALUMINUM,18X18X60,BLK PDR COAT	847.30
	Y	530	1725120	64.01	EA	TOOLBOX,ALUMINUM,18X24X48,BLK PDR COAT	867.75
	Y	530	1725130	46.00	EA	TOOLBOX,ALUMINUM,24X24X24,BLK PDR COAT	679.90
	Y	530	1725133	53.01	EA	TOOLBOX,ALUMINUM,24X24X30,BLK PDR COAT	757.90
	Y	530	1725135	59.00	EA	TOOLBOX,ALUMINUM,24X24X36,BLK PDR COAT	804.85
	Y	530	1725140	76.00	EA	TOOLBOX,ALUMINUM,24X24X48,BLK PDR COAT	898.90
	Y	530	1725145	89.01	EA	TOOLBOX,ALUMINUM,24X24X60,BLK PDR COAT	1,044.40
	Y	530	1725150	22.50	EA	TOOLBOX,ALUMINUM,14X12X24,BLK PDR COAT	483.35
	Y	530	1725153	27.01	EA	TOOLBOX,ALUMINUM,14X12X30,BLK PDR COAT	548.60
	Y	530	1725160	26.01	EA	TOOLBOX,ALUMINUM,14X16X24,BLK PDR COAT	499.35
	Y	530	1725640	68.50	EA	TOOLBOX,ALUMINUM,TOPSIDER,72inCON TRACTO	1,092.40
	Y	530	1725641	58.00	EA	TOOLBOX,ALUMINUM,TOPSIDER,72in CONTR W/	1,351.20
	Y	530	1725650	68.50	EA	TOOLBOX,ALUMINUM,TOPSIDER,88inCON TRACTO	1,218.95
	Y	530	1725651	91.00	EA	TOOLBOX,ALUMINUM,TOPSIDER,88inCON TR W/	1,491.00
	Y	530	1725652	85.01	EA	TOOLBOX, ALUMINUM TOPSIDER,88in,CONTR	1,418.92
	Y	530	1725660	68.50	EA	TOOLBOX,ALUMINUM,TOPSIDER,96inCON TRACTO	1,223.25
	N	530-1	1725662	91.01	EA	TOOLBOX, ALUMINUM TOPSIDER,96in,CONTR	1,423.25
	Y	530	1729305	75.00	EA	TOOLBOX,CROSS,SGL LID 18X20X71, BLACK	907.72
	Y	530	1729308	77.00	EA	TOOLBOX,ALUM,CROSS,SGL LID 23X20X71,BLK	1,076.26
	Y	530	1729315	89.00	EA	TOOLBOX,CROSS,SGL LID 18X27X71, BLACK	1,009.70
***	Y	530	1729318	91.00	EA	TOOLBOX,CROSS,SGL LID 23X27X71, BLACK	1,459.50
	Y	530	1732300	59.00	EA	TOOLBOX STEEL,18x18x24,DIE CAST 3 PT	373.34
	Y	530	1732303	70.00	EA	TOOLBOX,STEEL,18x18x30,DIE CAST 3 PT	392.70

Buyers Products Company * 9049 Tyler Blvd. * Mentor, OH 44060 *
*** F.O.B. Mentor, Ohio * $25.00 Minimum Order**

Price List in Effect on 12/1/2016 * For ALL Items in Catalogs * Marking NEW Pricing on Items Changed Since 11/1/2016

	Y	530	1732305	83.00	EA	TOOLBOX,STEEL,18x18x36,DIE CAST 3 PT	457.90
	Y	530	1732400	59.00	EA	TOOLBOX,STEEL,18x18x24,DIE CAST 3 PT	389.50
	Y	530	1732403	70.00	EA	TOOLBOX,STEEL,18x18x30,DIE CAST 3 PT	409.86
	Y	530	1732405	83.00	EA	TOOLBOX,STEEL,18x18x36,DIE CAST 3 PT	478.30
	Y	530	1734300	84.00	EA	TOOLBOX,STEEL,24x24x24,DIE CAST 3 PT	625.24
	Y	530	1734303	95.00	EA	TOOLBOX,STEEL,24x24x30,DIE CAST 3 PT	650.26
	Y	530	1734305	110.00	EA	TOOLBOX,STEEL,24x24x36,DIE CAST 3 PT	746.20
	Y	530	1734400	84.00	EA	TOOLBOX,STEEL,24x24x24,DIE CAST 3PT	659.74
	Y	530	1734403	95.00	EA	TOOLBOX,STEEL,24x24x30,DIE CAST 3PT	686.28
	Y	530	1734405	110.00	EA	TOOLBOX,STEEL,24x24x36,DIE CAST 3PT	787.96
	Y	530	1735100	32.50	EA	TOOLBOX, ALUMINUM,18x18x24,DIE CAST 3 PT	507.70
	Y	530	1735103	38.00	EA	TOOLBOX,ALUMINUM,18X18X30,DIE CAST 3 PT	536.26
	Y	530	1735105	43.50	EA	TOOLBOX,ALUMINUM,18X18X36,DIE CAST 3 PT	599.20
	Y	530	1735130	44.50	EA	TOOLBOX,ALUMINUM,24X24X24 DIE-CAST,3 PT	649.88
	Y	530	1735133	58.00	EA	TOOLBOX,ALUMINUM,24X24X30,DIE CAST 3 PT	737.88
	Y	530	1735135	62.50	EA	TOOLBOX,ALUMINUM,24X24X36,DIE CAST 3 PT	764.84
	Y	530	1742300	80.01	EA	TOOLBOX,STEEL,18X18X24,DIE CAST T-HDL,	399.80
	Y	530	1742303	91.01	EA	TOOLBOX,STEEL,18X18X30,DIE CAST T-HDL,	446.30
	Y	530	1742305	104.01	EA	TOOLBOX,STEEL,18X18X36,DIE CAST T-HDL,	469.70
	Y	530	1742310	127.01	EA	TOOLBOX,STEEL,18X18X48,DIE CAST T-HDL,	533.60
	Y	530	1742315	175.01	EA	TOOLBOX,STEEL,18X18X60,DIE CAST T-HDL,	769.90
	Y	530	1742325	202.01	EA	TOOLBOX,STEEL,18X18X72,DIE CAST T-HDL,	835.70
	Y	530	1742335	228.01	EA	TOOLBOX,STEEL,18X18X90,DIE CAST T-HDL,	925.70
	Y	532	1801000	31.00	EA	RECEIVER, MULTI FIT, CLASS 2	184.55
	Y	532	1801005	51.00	EA	RECEIVER,MULTI FIT,CLASS 4,GRAPHIC	218.20
	Y	532	1801020	45.40	EA	RECEIVER MULTI FIT,CLASS 3	184.55
	Y	532	1801050	48.70	EA	HITCH,UNIVERSAL FIT SERVICE BODY W/44in	203.35
	Y	532	1801050L	74.00	EA	HITCH,UNIVERSAL FIT SERVICE BODY W/LONG	273.95
	Y	532	1801051	62.00	EA	HITCH,UNIVERSAL FIT SERVICE BODY W/62in	238.85

Buyers Products Company * 9049 Tyler Blvd. * Mentor, OH 44060 *
*** F.O.B. Mentor, Ohio * $25.00 Minimum Order**

Price List in Effect on 12/1/2016 * For ALL Items in Catalogs * Marking NEW Pricing on Items Changed Since 11/1/2016

	Y	532	1801051L	85.50	EA	HITCH,UNIVERSAL FIT SERVICE BODY W/LONG	291.05
	Y	532	1801052	49.20	EA	HITCH, UNIV FIT SERV BODY W/44in CROSS	223.65
	Y	532	1801053	65.00	EA	HITCH,10000 LBS,SERVICE BODY, SHORT	306.90
	Y	532	1801055	66.50	EA	HITCH,10000 LBS,SERVICE BODY, LONG	326.90
	Y	532	1801100	41.60	EA	HITCH,2.0 RCVR,GM EXPRESS/SAVANA	352.55
	Y	532	1801102	51.80	EA	HITCH,2.0 RCVR,GM EXPRESS/SAVANA CUTAWAY	352.55
	Y	532	1801111	57.01	EA	HITCH,2.0 RCVR,GM-C&C,C3500, 11-16+	352.55
	Y	532	1801119	75.01	EA	HITCH,2.0 RCVR,GM-25/C3500 PICKUP 2011+	399.75
	Y	532	1801120	72.48	EA	RECEIVER,TRAILER ACCESSORY CARRIER	319.00
	Y	532	1801125	55.00	EA	HITCH, UNIVERSAL FIT	220.40
	Y	532	1801208A	63.48	EA	HITCH,2.0 IN RCVR FORD F350 09+ CC	352.55
	Y	532	1801214	62.00	EA	HITCH,2.0 IN RCVR FORD F450/550 CC2011+	352.55
	Y	532	1801301	64.00	EA	HITCH,2.0IN RCVR, MULTIFIT,GM,FORD,DODGE	352.55
	Y	532	1801400	74.20	EA	HITCH, 2.5IN RCVR, CUTAWAY CHASSIS	352.55
	Y	532	1801401	72.89	EA	HITCH, 2in RCVR, CUTAWAY CHASSIS/UTILITY	352.55
	Y	545	1802005	2.50	EA	BALL,TOWING,CRM, 2in w/1in-14 X 2-1/8in,	9.74
	Y	545	1802007	2.50	EA	BALL,TOWING,CRM,2in w/1in-14X2-3/4 SHANK	11.09
	Y	545	1802010	2.10	EA	BALL,TOWING,CRM,2in w/3/4in-16 X 2-1/8in	8.94
	Y	545	1802015	1.80	EA	BALL,TOWING,CRM,1-7/8in w/3/4in-16X2-1/8	8.58
	Y	545	1802020	2.25	EA	BALL,TOWING,CRM,1-7/8in w/1in-14X2-1/8in	8.98
	Y	545	1802025	4.20	EA	BALL,TOWING,CRM,2-5/16inX1-1/4inX2-3/4in	15.08
	Y	545	1802026	3.20	EA	BALL,TOWING,CRM,2-5/16in w/1in-14X2-1/8	12.33
	Y	545	1802027	3.20	EA	BALL,TOWING,CRM,CLAM2-5/16in, w/1in-14 X	15.98
	Y	545	1802050	4.06	EA	BALL,TOWING,H.T.,2-5/16X1-1/4X	29.25
	Y	545	1802055	4.81	EA	BALL,TOWING,H.T.,2-5/16X1-1/4 SHANK X	33.76
	Y	545	1802056	5.80	EA	BALL,TOWING,H.T.,2-5/16X1-1/2 SHANK X	36.92
	Y	545	1802061	7.04	EA	BALL,TOWING,H.T.,2-5/16X1-1/2 SHANK X	39.44
	Y	545	1802103	1.75	EA	BALL,TOW,CRM,1-7/8X5/8X1-3/4 ,2000# GTW	7.66
	Y	545	1802105	1.80	EA	BALL,TOW,CRM,1-7/8X3/4X1-3/4 ,2000# GTW	7.66
	Y	545	1802106	1.80	EA	BALL,TOW,ZINC,1-7/8X3/4X1-3/4,2000# GTW	7.58

Buyers Products Company * 9049 Tyler Blvd. * Mentor, OH 44060 *
*** F.O.B. Mentor, Ohio * $25.00 Minimum Order**

Price List in Effect on 12/1/2016 * For ALL Items in Catalogs * Marking NEW Pricing on Items Changed Since 11/1/2016

	Y	545	1802108	1.80	EA	BALL,TOWING,CRM,1-7/8in w/3/4in-16X2-1/8	7.74
	Y	545	1802110	2.25	EA	BALL,TOW,CRM,1-7/8X1X2-1/8,2000# GTW	8.54
	Y	545	1802111	2.25	EA	BALL,TOW,ZINC,1-7/8X1X2-1/8,2000# GTW	8.42
	Y	545	1802130	2.10	EA	BALL,TOW,CHR,2X3/4X1-3/4 ,3500# GTW	7.98
	Y	545	1802131	2.10	EA	BALL,TOW,ZINC,2X3/4X1-3/4 ,3500# GTW	7.62
	Y	545	1802134	2.50	EA	BALL,TOW,CRM,2X1X2-1/8 ,5000# GTW	9.02
	Y	545	1802135	2.50	EA	BALL,TOW,ZINC,2X1X2-1/8 GTW 5000#	9.82
	Y	545	1802136	2.50	EA	BALL,TOW,CRM,2X1X2-3/4 ,10,000# GTW	10.13
	Y	545	1802148	3.75	EA	BALL,TOW,CRM,2X1-1/4X2-1/4 ,7500# GTW	10.65
	Y	545	1802161	3.20	EA	BALL,TOW,CRM,2-5/16X1X2-1/8 ,6000# GTW	11.65
	Y	545	1802162	3.20	EA	BALL,TOW,ZINC,2-5/16X1X2-1/8,6000# GTW	11.01
	Y	545	1802167	4.25	EA	BALL,TOW,CRM,2-5/16X1-1/4X2-1/2,10,000#	13.57
	Y	545	1802168	4.25	EA	BALL,TOW,ZINC,2-5/16X1-1/4X2-1/2,10,000#	13.01
	Y	545	1802175	5.60	EA	BALL,TOW,CRM,2-5/16X1-1/4X2-1/2 W/2in	19.55
	Y	539	1802200	19.50	EA	TRI-BALL HITCH,1-7/8,2,2-5/16	60.90
	Y	539	1802202	11.90	EA	TRIBALL HITCH, 1-7/8,2in,2-5/16, BLACK	48.58
	Y	539	1802205	19.50	EA	TRI BALL,1-7/8,2,2-5/16 CHROME	62.90
	Y	539	1802207	11.90	EA	TRI-BALL, 1-7/8,2,2-5/16, CHROME BALLS	51.50
	Y	539	1802208	13.40	EA	TRI-BALL W/HOOK HITCH,1-7/8,2,2-5/16,blk	75.15
	Y	539	1802215	18.00	EA	BALL MOUNT,DBL,2inX2-5/16inX8in SHANK	54.50
***	Y	539	1802225	44.00	EA	TRI-BALL,ADJUSTABLE,1-7/8in,2in&2-5/16in	205.00
	Y	539	1802279	24.00	EA	TRI-BALL,W/PINTLE & WELDED CHROME BALLS	146.95
	Y	536	1803005	5.59	EA	BALL MOUNT,2inSQ,2inDROP,8inTUBE,BLACK	17.68
	Y	536	1803006	6.80	EA	BALL MOUNT,CHROME, 2in	23.09
	Y	536	1803007	7.71	EA	BALL MOUNT,2inSQ,2inDROP,10inTUBE,BLACK	21.42
	Y	536	1803010	7.47	EA	BALL MOUNT,2inSQ,4inDROP,8inTUBE,BLACK	21.42
	Y	536	1803013	7.00	EA	BALL MOUNT,2inSQ,4inDROP,10inTUBE,BLACK	24.93
	Y	536	1803015	9.90	EA	BALL MOUNT,2inSQ,6inDROP,10inTUBE,BLACK	29.12

Buyers Products Company * 9049 Tyler Blvd. * Mentor, OH 44060 *
*** F.O.B. Mentor, Ohio * $25.00 Minimum Order**

Price List in Effect on 12/1/2016 * For ALL Items in Catalogs * Marking NEW Pricing on Items Changed Since 11/1/2016

	Y	536	1803016	9.90	EA	BALL MOUNT,2inSQ,6inDROP,10inTUBE,CHROME	36.19
	Y	536	1803017	12.07	EA	BALL MOUNT,2in SQ,8in DROP,10inTUBE,BLK	32.03
	Y	536	1803019	16.00	EA	BALL MOUNT,2in,10in DROP,10.25inSHANK,BL	61.05
	Y	536	1803050	12.00	EA	BALL MOUNT,2inSQ SOLID,2inDROP,1in HOLE	44.65
	Y	536	1803051	11.40	EA	BALL MOUNT,2in SQ.SOLID,2in DROP,1-1/4in	46.55
	Y	536	1803055	12.80	EA	BALL MOUNT,2inSQ SOLID 4inDROP W/1inHOLE	55.80
	Y	536	1803056	12.70	EA	BALL MOUNT,2inSQ SOLID4in DROPW/1-1/4in	55.80
	Y	536	1803058	16.00	EA	BALL MOUNT,2inSQ SOLID; 6 in DROP,10inLG	61.95
	Y	536	1803059	16.00	EA	BALL MOUNT,2inSQ SOLID W/1.25in HL BLACK	57.51
	Y	536	1803060	11.90	EA	BALL MOUNT,CLEVIS,2inSQ TUBE W/	42.70
	Y	536	1803065	17.40	EA	BALL MOUNT,CLEVIS,2inSQ SOLID,	51.70
	Y	536	1803090	16.66	EA	BALL MOUNT,ADJ,4-POSITION	66.80
	Y	536	1803093	14.89	EA	BALL MOUNT,ADJ,3-POSITION	74.10
	Y	536	1803095	32.00	EA	BALL MOUNT,ADJ,4-POSITION, SOLID	113.10
	Y	536	1803100CR	5.85	EA	BALL MOUNT,1.25inSQ X 1.25inDROP X 9.00	22.75
	Y	536	1803105	4.15	EA	BALL MOUNT,1-1/4inSQ X 2-1/2inDROP X 7in	22.75
	Y	536	1803110	5.50	EA	BALL MOUNT,1.25inSQ X 4inDROP X 7.00	23.70
	Y	536	1803210	7.75	EA	BALL MOUNT DBL,2inDROP,1-7/8in	52.06
	Y	536	1803215	10.95	EA	BALL MOUNT,DBL,2inDROP,2inBALL &	55.80
	Y	536	1803306	10.00	EA	BALL MOUNT KIT,2 X 8 CRM,W/2in BALL,3/PK	36.06
	Y	536	1803306LP	11.70	EA	BALL MOUNT KIT,2 X 8 CRM,W/2in BALL,3/PK	56.05
	Y	536	1803307	8.81	EA	BALL MOUNT KIT,2in DROP,2inBALLW/HP 3/PK	31.17
	Y	536	1803308	10.00	EA	BALL MOUNT KIT,2inDROP,2-5/16inBALL 3 PK	34.79
	Y	536	1803312	12.00	EA	BALL MOUNT KIT,4inDROP,	28.60
	Y	536	1803313	9.77	EA	BALL MOUNT KIT,4inDROP,2inBALL w/HP 3/PK	33.05
	Y	536	1803314	10.45	EA	BALL MNT KIT,4inDRP,2-5/16 BALL w/HP3/PK	39.12
	Y	536	1803405	11.85	EA	BALL MOUNT,2.50inSQ X 3.00inDROP X 10.00	64.95
	Y	536	1803410	14.50	EA	BALL MOUNT,2.50inSQ X 5.00inDROP X 10.00	75.85
	Y	536	1803415	17.52	EA	BALL MOUNT,2.50inSQ X 7.75inDROP X 10.00	79.80
	N	542	1804003	11.86	EA	EXTENSION,RECEIVER,7in,2inSQ	44.68
	N	542	1804005	17.95	EA	EXTENSION,RECEIVER,12in,2inSQ	53.10
	N	542	1804007	23.60	EA	EXTENSION,RECEIVER,18in,2inSQ	76.78

Buyers Products Company * 9049 Tyler Blvd. * Mentor, OH 44060 *
*** F.O.B. Mentor, Ohio * $25.00 Minimum Order**

Price List in Effect on 12/1/2016 * For ALL Items in Catalogs * Marking NEW Pricing on Items Changed Since 11/1/2016

	N	542	1804015	21.00	EA	EXTENSION,RECEIVER, W/STEP, 12in,2inSQ	82.80
	N	542	1804017	27.05	EA	EXTENSION,RECEIVER, W/STEP, 18in,2inSQ	96.64
	Y	532	1804030	7.00	EA	HITCH,ADAPTER,1-1/4in TO 2in	32.45
	Y	532	1804035	3.00	EA	HITCH,ADAPTER,2in TO 1-1/4in W/	23.90
	Y	532	1804055	8.00	EA	RECEIVER TUBE,BOLT ON	73.40
	Y	532	1804060	9.53	EA	HITCH, UNIVERSAL RECEIVER	87.95
	N	542	1805005	46.00	EA	BIKE RACK,4 BIKE,TOWABLE,FOLD,LOCK 3500#	149.50
	N	546	1808010	12.50	EA	COUPLER GOOSENECK,2-5/16 BALL,HEAD ONLY	67.70
	Y	519	1809025	42.50	EA	BUMPER,34in FRAME,ICC	162.41
	Y	551	1809027A	168.20	EA	HITCH PLATE KIT, 3/4in THK, FABRICATORS	559.90
	Y	551	1809030A	104.00	EA	stbrb PLATE,HITCH,FORD,FINISHED	406.86
	Y	551	1809035	90.00	EA	stbrb PLATE,HITCH,CHEVY/GM,FINISHED	368.69
	Y	551	1809036	107.00	EA	PLATE,HITCH,GM PINTLE,W/BOTTOM BUMPER	530.71
	Y	551	1809037	108.00	EA	stbrb PLATE,HITCH,DODGE,3500/4500/5500	494.16
	Y	551	1809038	102.00	EA	stbrb PLATE,HITCH,GM PINTLE,C4500/C5500	511.60
	Y	551	1809039	126.00	EA	stbrb PLATE,HITCH,GM PINTLE,C4500/C5500	586.70
	Y	551	1809040	71.00	EA	HITCH PLATE KIT,1/2in THK FABRICATORS	187.88
	Y	551	1809042	93.00	EA	HITCH PLATE KIT,5/8in THK FABRICATORS	350.22
	Y	551	1809043	131.00	EA	HITCH PLATE,FBRCTR,34.5inx22x5/8thk,B48	521.15
	Y	551	1809050	117.00	EA	BUMPER,HITCH,FLAT BED DUMP	466.70
	Y	551	1809055	124.00	EA	BUMPER,RECEIVER HITCH,FLAT BED DUMP	516.80
	Y	551	1809060A	123.00	EA	PLATE,HITCH,FORD RECEIVER FINISHED	462.20
	Y	551	1809061A	124.00	EA	PLATE,HITCH,FORD, 2-1/2 RECEIVER	490.62
	Y	551	1809065	111.00	EA	PLATE,HITCH,GM RECEIVER	427.46
	Y	551	1809067	127.00	EA	PLATE,RECEIVER HITCH,DODGE3500/4500/5500	558.50
	N	548	1901006	3.60	EA	CHAIN TIE DOWN, 3/8in, GRADE 70	19.25
	N	520	1903000	0.24	EA	E-TRACK,SINGLE,CLEAR ZINC,MBS 4400#,WLL	3.75
	N	520	1903001	0.24	EA	E-TRACK,SINGLE,BLACK,MBS 4400#,WLL 1400#	3.75
	N	548	1903005	9.00	EA	WINCH,STD WELD-ON (RH)	23.05
	N	548	1903005LH	8.10	EA	WINCH,STD WELD-ON (LH)	22.10
	N	548	1903020	9.08	EA	WINCH,STD BOLT-ON W/2 SETSCREW	27.75
	N	548	1903030	10.50	EA	WINCH,STD. SLIDING	25.30
	N	548	1903035	11.50	EA	WINCH,DEEP STORABLE,SLIDING	28.55
	N	548	1903040	39.00	EA	TRACK,SLIDING WINCH,1/4inX72in	88.32
	N	520	1903050	16.50	EA	E-TRACK,HORIZONTAL,(10FT)GREY	37.00
	N	520	1903052	3.30	EA	E-TRACK,HORIZONTAL (2FT) GREY	7.60
	N	520	1903055	7.69	EA	E-TRACK,HORIZONTAL (5FT) GREY	18.54

Buyers Products Company * 9049 Tyler Blvd. * Mentor, OH 44060 *
*** F.O.B. Mentor, Ohio * $25.00 Minimum Order**

Price List in Effect on 12/1/2016 * For ALL Items in Catalogs * Marking NEW Pricing on Items Changed Since 11/1/2016

	N	548	1903060	5.30	EA	WINCH BAR,STD,BLACK	17.17
	N	548	1903065	6.56	EA	WINCH BAR,COMBO,BLACK	22.46
	N	548	1903066	6.56	EA	WINCH BAR,COMBO,CHROME	24.65
	N	548	1903070	4.64	EA	STRAP,4inX27ft,FLAT HOOK 15K#CAP	26.00
	N	520	1903110	6.40	EA	E-TRACK,HORIZONTAL,10FT ALUMINUM,NO	64.75
	N	510	19CH545	0.09	EA	19 CYLINDER & CH545 KEY	5.85
	N	526	2	0.23	EA	PLATE,BEARING BOTTOM	1.15
	N	290	20	0.11	EA	KNOB,2in,PLAIN,1/4-28	3.50
	N	634	2000	0.14	EA	CLAMP,HOSE 2in, 17/32 HOLE	1.40
	N	624	203	17.42	EA	VALVE, 21 GPM, 3 WAY	352.25
	N	624	203D42PRPB	24.06	EA	VALVE, 21 GPM, 3 WAY DET IN,4 WAY,2 PORT	696.55
	N	624	203D4PR42PR PB	32.00	EA	VALVE, 21 GPM, 3 WAY DET IN,4 WAY, PR,	944.30
	N	624	203PB	17.38	EA	VALVE,HYD,3W,W/ PB	348.46
	N	624	204	17.19	EA	VALVE, 21 GPM, 4 WAY, NO POWER BEYOND	375.06
	N	624	204PB	17.38	EA	VALVE, 21 GPM, 4 WAY, POWER BEYOND	348.45
	N	624	204PR	17.77	EA	VALVE, 21 GPM, 4 WAY,PR	451.05
	N	624	204PRPB	17.73	EA	VALVE, 4 WAY,PR, W/POWER BEYOND	459.75
	N	889	211141	0.20	EA	REPLACEMENT FLASH TUBE-STROBE	24.00
	N	290	250	0.01	EA	CONDUIT STRAPS FOR 1/4in O.D.	0.32
	Y	390	2F12	1.20	EA	FLANGE UNIT 2-HOLE 3/4in	17.90
	Y	390	2F12SCR	1.00	EA	FLANGE UNIT,2-HOLE,3/4in,SET SCREW LLKG	12.95
	Y	390	2F16	2.00	EA	FLANGE UNIT 2-HOLE 1in	19.20
	Y	390	2F16SCR	1.40	EA	FLANGE UNIT,2-HOLE,1in,SET SCREW LOCKING	13.78
	Y	390	2F18SCR	2.30	EA	FLANGE UNIT,2-HOLE,1-1/8in,SET SCREW LKG	15.92
	Y	390	2F20	3.40	EA	FLANGE UNIT 2-HOLE 1-1/4in	31.10
	Y	390	2F20SCR	2.50	EA	FLANGE UNIT,2-HOLE,1-1/4in,SET SCREW LKG	17.20
	Y	390	2F24SCR	3.50	EA	FLANGE UNIT,2-HOLE,1-1/2in,SET SCREW LKG	25.42
	Y	390	2FS16	0.90	EA	BEARING, 2 HOLE MOUNT, 1inI.D.	26.40
	N	526	3	0.26	EA	CAP,BEARING	1.30
	N	520	3001894	4.64	EA	ROLL TARP UNIVERSAL JOINT	37.94
	N	520	3001895	1.54	EA	SPLINE, 21 MALE X 1-13/16inMALE	13.20
	N	530-1	3002713	0.16	EA	PIN,STRIKER WLDMNT ASSY	3.00
	N	520	3002879	3.03	EA	SPRING,TORSION RAMP,LEFT HAND COIL PL	22.45
	N	520	3002880	3.03	EA	SPRING,TORSION RAMP,RIGHT HAND COIL PL	22.45
	N	591	3003081	0.07	EA	LANYARD,CTR TO CTR LG,17.15, CBL PVC	5.25
	N	525	3003316	0.23	EA	PIN,SAFETY 3/8inX2-1/4in,ZN W/8in	2.00
	N	591	3003480	0.06	EA	LANYARD,CTR TO CTR LG,12.65, CBL PVC	5.25
	Y	538	3004090	2.13	EA	LOCK,TRIMMER RACK,LT10,WELDED	21.36

Buyers Products Company * 9049 Tyler Blvd. * Mentor, OH 44060 *
*** F.O.B. Mentor, Ohio * $25.00 Minimum Order**

Price List in Effect on 12/1/2016 * For ALL Items in Catalogs * Marking NEW Pricing on Items Changed Since 11/1/2016

	N	591	3004556	0.06	EA	LANYARD,TOPSIDER	2.06
	N	525-1	3004987	0.15	EA	PIN,SAFETY, 1/4in ZINC,PLATED W/LANYARD	1.95
	Y	532	3005345	45.00	EA	HITCH,3 POINT, RECEIVER ASSEMBLY	209.56
	N	533	3005528	2.44	EA	MOUNT ASSEMBLY, TUBE, TRLR JACK 0091340/	17.10
	N	635	3005534	0.12	EA	GASKET,RESERVOIR COVER PLATE	8.15
	N	530-1	3005833	0.26	EA	STRIKER,PAD LATCH,ZINC	3.00
	Y	540	3006554	0.31	EA	HARDWARE KIT,CONDUIT	0.75
	N	525-1	3006875	0.15	EA	PIN,SAFETY, 1/4in ZINC PLATED	2.05
	Y	532	3006909	38.00	EA	HITCH,SERVICE BODY W/O BRACKETS	154.60
	Y	531	3008086	17.00	EA	MOUNT KIT,BACKPACK BOX	115.80
	Y	554-1	3008209	9.80	EA	TARP, 7.50ft X 15.00ft,BLACK MESH	118.55
	Y	554-1	3008210	9.15	EA	TARP, 7.00ft X 15.00ft,BLACK MESH	109.65
	N	486	3008647	0.01	EA	BUSHING,STEEL,B2426F SERIES HINGE,	0.65
	N	530-1	3008745	0.03	EA	BALL STUD 10MM WITH 5/16in THD, ZINC PLT	0.50
	Y	554-1	3008976	8.50	EA	TARP, 6.50ft X 15.00ft,BLACK MESH	96.97
	Y	554-1	3009094	10.00	EA	TARP, 6.50ft X 18.00ft,BLACK MESH	124.40
	Y	554-1	3009095	12.85	EA	TARP, 7.50ft X 20.00ft,BLACK MESH	130.50
	N	530-1	3009122	0.85	EA	HANGER,DOUBLE,,ZN J-HOOKS W/STEEL	25.90
	N	520	3009253	3.27	EA	MOUNTING KIT,VIBRATOR,ALUMINUM	57.75
	Y	554-1	3009455	7.50	EA	TARP, 6.00ft X 14.00ft,BLACK MESH	91.30
	Y	554-1	3009456	11.00	EA	TARP, 7.00ft X 18.00ft,BLACK MESH	115.35
	Y	554-1	3009457	12.25	EA	TARP, 7.00ft X 20.00ft,BLACK MESH	125.55
	Y	554-1	3009458	11.75	EA	TARP, 7.50ft X 18.00ft,BLACK MESH	120.85
	Y	554-1	3009892	15.00	EA	TARP, 8.00ft X 22.00ft,BLACK MESH	176.40
	N	530-1	3009938	2.16	EA	HANGER,TRIPLE, J-HOOKS,AL W/MNTG ANGLE	60.20
	N	510	3009988	0.97	EA	LATCH,SPRING ASSY,SST	19.55
	N	530-1	3010339	0.42	EA	SHOCK,GAS,20 LBS W/BRASS INSERT	17.50
	Y	554-1	3011034	5.40	EA	TARP, 5.00ft X 12.00ft,BLACK MESH	74.40
	Y	554-1	3011035	9.48	EA	TARP, 7.50ft X 12.00ft,BLACK MESH	99.15
	Y	554-1	3011036	7.30	EA	TARP, 7.00ft X 12.00ft,BLACK MESH	92.55
	Y	554-1	3011350	7.00	EA	TARP, 5.50ft X 14.00ft,BLACK MESH	87.95
	Y	554-1	3011351	15.00	EA	TARP, 7.00ft X 18.00ft,BLACK SOLID VINYL	183.95

Buyers Products Company * 9049 Tyler Blvd. * Mentor, OH 44060 *
*** F.O.B. Mentor, Ohio * $25.00 Minimum Order**

Price List in Effect on 12/1/2016 * For ALL Items in Catalogs * Marking NEW Pricing on Items Changed Since 11/1/2016

	Y	554-1	3011352	13.00	EA	TARP, 7.00ft X 15.00ft,BLACK SOLID VINYL	153.25
	Y	554-1	3011353	16.05	EA	TARP, 7.50ft X 15.00ft,BLACK SOLID VINYL	166.20
	Y	554-1	3011354	17.00	EA	TARP, 7.50ft X 20.00ft,BLACK SOLID VINYL	174.85
	N	554-3	3011868	1.66	EA	JOINT,TARP,SIDE 30 DEGREE; A380 MATERIAL	24.90
	N	554-3	3011870	14.00	EA	AXLE,TARP,MULTIMOUNT	136.80
	N	554-3	3011871	12.00	EA	DEFLECTOR,TARP	129.50
	N	554-3	3011876	1.10	EA	SPRING,TARP,TORSION,5/8in,BLACK	9.80
	N	523	3012035	4.35	EA	STEP GALVANIZED 12inX4.85inX1.87in	36.62
	N	554-3	3012783	15.40	EA	WIRE,6GA,DUAL CONDUCTOR 60FT SERV ONLY	192.40
	N	554-3	3012784	0.46	EA	BEARING, FLANGED, 3/4in LIGHT DUTY	17.90
	Y	554	3013299	4.34	EA	CHAIN, #40 ROLLER, 10FT, W/ MASTER LINk,	49.80
	N	520	3013332	0.12	EA	HOOK,UTILITY,1-1/2in X 2in ZINC	1.98
	Y	554-1	3013395	14.70	EA	TARP, 7.00ft x 24.00ft,BLACK MESH	131.50
	Y	554-1	3013396	17.15	EA	TARP, 7.00ft x 28.00ft,BLACK MESH	149.50
	Y	554-1	3013397	15.42	EA	TARP, 7.50ft x 24.00ft,BLACK MESH	142.90
	Y	554-1	3013398	18.00	EA	TARP, 7.50ft x 28.00ft,BLACK MESH	159.85
	N	523	3013531	4.35	EA	STEP,12 GAGE,PLAIN STEEL,4.75inX12in	27.95
	N	523	3013658	14.60	EA	STEP, POLY, UTILITY, 2 STEPS, BLACK	68.00
	N	543	3013872	0.98	EA	GAGES, DRAWBAR EYE WEAR	25.95
	N	560	3014186	0.08	EA	COVER,SOLENOID,PLASTIC,BLACK	8.00
	N	639	3014187	0.10	EA	SWITCH,ROCKER,12V,DBL MOMENTARY OPEN/CLS	12.50
	N	554-3	3014188	0.25	EA	BRACKET,SWITCH,ROCKER	6.50
	N	913	3014193		EA	BULB, H1 HIGH BEAM	8.40
	N	913	3014194		EA	BULB, H7 LOW BEAM	11.06
	N	240	3014204	0.48	EA	BRACKETS,L & R MOUNTING,REMOTE	13.95
	N	240	3014332	0.13	EA	HARDWARE,MTG,B206401 & B206401001,SINGLE	1.45
	Y	554-1	3014480	4.00	EA	TARP, 4.60ft X 10.00ft,BLACK MESH	61.50
	Y	554-1	3014481	5.33	EA	TARP, 5.40ft X 11.50ft,BLACK MESH	75.55
	Y	554-1	3014677	4.50	EA	TARP, 5.40ft X 9.50ft,BLACK MESH	66.00
	N	546	3014981	71.20	EA	GOOSENECK PLATE 2 5/16 BALL W/DRINGS	211.70
	N	554-3	3015127	3.00	EA	CONTACT PLATE, 12 VOLT, TARP SYSTEM	52.95

Buyers Products Company * 9049 Tyler Blvd. * Mentor, OH 44060 *
*** F.O.B. Mentor, Ohio * $25.00 Minimum Order**

Price List in Effect on 12/1/2016 * For ALL Items in Catalogs * Marking NEW Pricing on Items Changed Since 11/1/2016

	N	512	3015862	3.00	EA	HANDLE,INSPECTION DR RPLCMNT FOR CCD0714	18.75
	N	512	3015863	2.76	EA	HANDLE,INSPECTION DR RPLCMNT FOR CCD1314	21.00
	Y	540	3015920	8.22	EA	LEG, EXTENSION KIT, 5in, 1501100	30.00
	Y	554-1	3016004	22.37	EA	TARP, 7.00ft X 21.00ft,BLACK SOLID VINYL	214.20
	Y	554-1	3016005	24.25	EA	TARP,12.00ft X 24.00ft,BLACK MESH,ROLL-	173.35
	Y	554-1	3016006	26.25	EA	TARP,12.00ft X 26.00ft,BLACK MESH,ROLL-	182.45
	N	889	3016342	0.20	EA	TUBE,FLASH,NEW STYLE, SL640ALP & SL660A	11.50
	Y	540	3016366	1.09	EA	CAP, REAR 6in for CC600	24.30
	Y	540	3016367	0.72	EA	CAP,REAR 4in for CC400	17.30
	Y	540	3016368	0.57	EA	SADDLE,for CC600	14.90
	Y	540	3016369	0.38	EA	SADDLE, for CC400	13.40
	Y	540	3016370	0.61	EA	U-BOLT,for CC600	8.00
	Y	540	3016371	0.42	EA	U-BOLT, for CC400	7.20
	Y	540	3016382	2.60	EA	CAP,FRONT for 6in CC600	60.75
	Y	540	3016383	1.90	EA	CAP, FRONT 4in for CC400	53.10
	N	859	3016508	1.20	EA	MOUNTING BRACKET,BULK,FOR 8591000	14.90
	N	554-3	3016666	59.00	EA	TARP ARM KIT,ALUMINUM,4 SPRING	594.90
	N	554-3	3016667	75.00	EA	TARP ARM KIT,ALUMINUM,5 SPRING	694.90
	N	859	3018069	0.02	EA	END CAP,PLASTIC,BLACK,REPLACEMENT,	1.58
	N	525-1	3018091	9.00	EA	BRAKE CHAMBER, TYPE 24, W/ 9-1/2in ROD	48.85
	N	561-1	3018195	8.39	EA	BALL, GOOSENECK 2-5/16in	79.80
	Y	532	3018538	40.00	EA	HITCH, SVC BODY W/O BRACKETS, 2.5in	166.58
	N	554-3	3020293	6.44	EA	CRANK, TARP, W/ FRICTION BRAKE	109.80
	Y	521	3020620	8.75	EA	HITCH,ADJ CHROME TRI-BALL, TUBED, ASSY	74.90
	N	554-3	3020919	10.50	EA	WIRE,8GA,DUAL CONDUCTOR 60FT	175.90
	Y	554-1	3022116	9.48	EA	TARP, 7.00ft X 22.00ft,BLACK MESH	128.50
	Y	554-1	3022117	9.48	EA	TARP, 8.00ft X 18.00ft,BLACK MESH	172.70
	N	530-1	3022729	0.27	EA	SHOCK, GAS, 25 LBS, W/ BRASS INSERT	17.50
	Y	555	3022840	0.25	EA	TIMER, 8 SECOND TIME DELAY, 12 VDC	79.50
	N	903-2	3023460	0.85	EA	AIR SPRING 250# 8 IN STROKE	39.34
	N	591	3023908	5.80	EA	LID, CHAIN CARRIER, FOR 5910024	69.30
	N	530-1	3024237	0.07	EA	LANYARD, 18.50 IN LONG	3.40
	N	530-1	3024238	0.08	EA	LANYARD, 27.10 IN LONG	3.00

Buyers Products Company * 9049 Tyler Blvd. * Mentor, OH 44060 *
*** F.O.B. Mentor, Ohio * $25.00 Minimum Order**

Price List in Effect on 12/1/2016 * For ALL Items in Catalogs * Marking NEW Pricing on Items Changed Since 11/1/2016

	N	889	3024631	0.28	EA	LIGHTHEAD,MIDDLE,3 LED REFLECTOR,AMBER	54.95
	N	889	3024632	0.27	EA	LIGHTHEAD,MIDDLE,3 LED REFLECTOR,CLEAR	54.95
	N	889	3024633	0.28	EA	LIGHTHEAD,MIDDLE,3 LED REFLECTOR,RED	54.95
	N	889	3024634	0.27	EA	LIGHTHEAD,MIDDLE,3 LED REFLECTOR,BLUE	54.95
	N	889	3024635	0.21	EA	LIGHTHEAD,CORNER,6 LED D-FUSER,AMBER	89.70
	N	889	3024636	0.20	EA	LIGHTHEAD,CORNER,6 LED D-FUSER,CLEAR	89.70
	N	889	3024637	0.21	EA	LIGHTHEAD,CORNER,6 LED D-FUSER,RED	89.70
	N	889	3024638	0.21	EA	LIGHTHEAD,CORNER,6 LED D-FUSER,BLUE	89.70
	N	889	3024639	0.23	EA	LIGHT,TAKE DOWN,MIDDLE,6 LED,CLEAR	116.60
	N	889	3024640	0.00	EA	LIGHT,TAKE DOWN,MIDDLE,9 LED,CLEAR	173.80
	N	889	3024646	2.58	EA	BRACKETS,LIGHTBAR,STD,ADJ WIDTH,2.25in	99.80
	N	889	3024647	3.89	EA	BRACKETS,LIGHTBAR,ADJ WIDTH & HEIGHT,	125.90
	N	889	3024648	3.16	EA	BRACKETS,LIGHTBAR,FLAT NARROW SURFACE	90.98
	N	889	3024649	2.47	EA	BRACKETS,LIGHTBAR,FLAT WIDE SURFACE,	90.98
	N	530-1	3024713		EA	SINGLE WRAP, ALUM, UNDERBODY, 18X124X48	
	N	554-3	3024748	2.17	EA	SHAFT,WELDMENT,TARP CRANK (E-C0AT)	35.82
	N	554-3	3024912	8.14	EA	SPRING,TORSION,5/8IN,DS,3900 LBS	53.00
	N	554-3	3024913	8.14	EA	SPRING,TORSION,5/8IN,PS,3900 LBS	53.00
	N	554-3	3024915	20.50	EA	SPRING PIVOT ASSEMBLY,W/ BEARING DS	150.64
	N	554-3	3024916	20.50	EA	SPRING PIVOT ASSEMBLY,W/ BEARING PS	150.64
	N	859	3024975	0.02	EA	END CAP,PLASTIC,BLACK,LRG,REPLACEMENT,	1.78
	Y	554-1	3025044	6.20	EA	TARP, 5.00ft X 14.00ft,BLACK MESH	79.20
	N	859	3025055	0.53	EA	WASHERS,REPLACEMENT KIT,SST,(8 PCS/KIT)	8.00
	N	889	3025442	1.53	EA	KIT,STRAP,SST,GM1500/2500/3500/4500/5500	49.75
	N	530-1	3025622	0.43	EA	SHOCK,GAS,30 LBS, W/BRASS INSERT	17.50
	N	530-1	3025623	0.27	EA	SHOCK,GAS,40 LBS, W/BRASS INSERT	17.50
	Y	540	3025858	1.15	EA	CAP, REAR, 8 INCH CONDUIT	33.55
	Y	540	3025859	0.12	EA	U-BOLT, 8 INCH CONDUIT	9.94
	Y	540	3025860	0.15	EA	SADDLE, 8 INCH CONDUIT	19.65

Buyers Products Company * 9049 Tyler Blvd. * Mentor, OH 44060 *
*** F.O.B. Mentor, Ohio * $25.00 Minimum Order**

Price List in Effect on 12/1/2016 * For ALL Items in Catalogs * Marking NEW Pricing on Items Changed Since 11/1/2016

	Y	540	3025864	3.90	EA	COVER, FRONT, 8 INCH CONDUIT	84.90
	N	889	3026114	1.60	EA	KIT,STRAP,SST,F-150,2004-2014, 49in&60in	49.75
	N	889	3026115	1.60	EA	KIT,STRAP,SST,F-250/350/450/550,1999-	49.78
	N	889	3026116	1.60	EA	KIT,STRAP,SST,RAM 1500/2500/3500, 2009-	49.75
	N	888	3026271	0.31	EA	MOUNT,MONITOR,W/2-SIDED TAPE & HDW	15.12
	N	554-3	3026457	1.45	EA	PLATE,END,TARP DS	44.35
	N	554-3	3026458	1.45	EA	PLATE,END,TARP PS	44.35
	N	554-3	3026462	16.93	EA	DEFLECTOR,TARP,FULL TOP	146.65
	N	530-1	3026586	0.42	EA	SHOCK, GAS, 50 LBS, W/ BRASS INSERT	17.50
	N	591	3027064	0.04	EA	LANYARD, TOOLBOX, 8.75 IN	
	N	591	3027065	0.04	EA	LANYARD, TOOLBOX, 9.63 IN	
	N	554-3	3027070	0.64	EA	GUDGEON, TARP, CAST	17.00
	Y	540	3028368	4.50	EA	CROSSBAR,LADDER RACK,	108.00
	N	530-1	3028392	0.42	EA	SHOCK, GAS, 80 LBS, W/ BRASS INSERT	17.50
	N	520	3028786	0.51	EA	SPRING,GAS, 35LB,5.47in STROKE,13.98in	17.50
	N	548	3028819	1.17	EA	TIEDOWN,RATCHET,REPLACEMENT KIT	23.85
	N	530-1	3029916	0.27	EA	SHOCK, GAS, 60 LBS, W/ BRASS INSERT	17.50
	N	530-1	3029917	0.38	EA	SHOCK, GAS, 100 LBS, W/ BRASS INSERT	17.50
	N	889	3029961	1.25	EA	BRACKET, MOUNTING, GALVANIZED, SL475A	19.95
	N	554-3	3031692	7.00	EA	BRACKETS,TARP,DTR,TAPERED,CRYSTEEL	49.95
	N	554-3	3031808	7.00	EA	BRACKETS,TARP,DTR,TAPERED,RUGBY	49.95
	N	889	3032932	0.28	EA	LIGHTHEAD,MIDDLE,3 LED REFLECTOR,GREEN	54.95
	N	889	3032933	0.21	EA	LIGHTHEAD,CORNER,6 LED D-FUSER,GREEN	89.70
	N	520	3034278	0.63	EA	SPRING, TORSION, RAMP,LEFT HAND COIL,	19.95
	N	520	3034279	0.63	EA	SPRING, TORSION, RAMP,RIGHT HAND COIL,	19.95
	N	290	312	0.01	EA	*DISCONTINUED*CONDUIT STRAPS FOR	
	N	080	32	0.01	EA	SCREW,SOCKET SET,3/8-16x1/2in CUP PT	0.80
	N	080	34	0.03	EA	SCREW,SET, SQ HD, CUP PNT 3/8-16 X 3/4in	1.00
	N	290	356	0.15	EA	MOUNTING PLATE	3.50
	N	290	375	0.01	EA	CONDUIT STRAP,FOR 3/8in O.D.	0.32
	N	080	38	0.01	EA	SCREW,SET 3/8-16 x 3/8in ALLEN	0.80
	N	380	3801000	0.92	EA	MOTORCYCLE WHEEL CHOCK CRM HARDWARE KIT	13.00
	N	510	39LL71	0.10	EA	39 CYLINDER & LL71 KEY	5.85

Buyers Products Company * 9049 Tyler Blvd. * Mentor, OH 44060 *
*** F.O.B. Mentor, Ohio * $25.00 Minimum Order**

Price List in Effect on 12/1/2016 * For ALL Items in Catalogs * Marking NEW Pricing on Items Changed Since 11/1/2016

	N	526	4	0.37	EA	PLATE, CORNER	1.60
	N	090	400	0.01	EA	GREASE FTG 1/4-28 TPR STRAIGHT	0.40
	N	859	400BZ	4.09	PR	BRACKET,ANTI-SAIL,GALVINIZED,(5pr/cs)	35.45
	N	624	403	31.68	EA	VALVE HYD 40GPM 3WAY NPB	630.08
	N	624	403D44PB	56.18	EA	3WAY DETENT, 4 WAY 4WAY	1,089.95
	N	624	403D4PR42PR PB	56.41	EA	3WAY DETENT, 4 WAY 1 PORT RELIEF,4 WAY 2	1,098.96
	N	624	403PB	31.32	EA	3WAY POWER BEYOND	611.80
	N	624	404	31.13	EA	4 WAY SPRING CENTERED	623.20
	N	624	404PB	30.73	EA	4 WAY W/POWER BEYOND	604.20
	N	624	404PR	31.32	EA	4 WAY W/1 PORT RELIEF	383.80
	N	624	404PRPB	31.05	EA	4 WAY , 1 PORT RELIEF, POWER BEYOND	364.80
	N	859	405BC	4.45	PR	BRACKET,ANTI-SAIL, CHROME ,(5pr/cs)	33.15
	N	859	405BZ	4.45	PR	BRACKET,ANTI-SAIL,GALVINIZED,(5pr/cs)	24.50
	N	859	405SS	4.10	PR	BRACKET, ANTI-SAIL, SST,(5 PR/CS) FOR	119.75
	N	290	4100	0.06	EA	CLAMP,KIT (3) PIECE	1.80
	N	370	441466	5.45	EA	BUMPER,RUBBER,3inX4-3/4inX10in W/	25.75
	N	090	450	0.02	EA	GREASE FTG 1/4-28 TAPER,45 DEG	0.75
	N	090	455	0.02	EA	GREASE FTG 1/4-28 TAPER,90 DEG	0.90
	Y	390	4F12SCR	1.50	EA	FLANGE UNIT,4-HOLE,3/4in SET SCREW LKG	12.95
	Y	390	4F16	2.15	EA	FLANGE UNIT 4-HOLE 1in	19.20
	Y	390	4F16SCR	1.80	EA	FLANGE UNIT,4-HOLE,1in SET SCREW LKG	13.73
	Y	390	4F20	4.00	EA	FLANGE UNIT 4-HOLE 1-1/4in	31.10
	Y	390	4F20SCR	2.60	EA	FLANGE UNIT,4-HOLE,1-1/4in,SET SCREW LKG	17.20
	Y	390	4F24	4.75	EA	FLANGE UNIT 4-HOLE 1-1/2in	36.35
	Y	390	4F24SCR	4.22	EA	FLANGE UNIT,4-HOLE,1-1/2in,SET SCREW LKG	25.42
	Y	390	4F28SCR	5.00	EA	FLANGE UNIT,4-HOLE,1-3/4in SET SCREW LKG	30.43
	Y	390	4F30SCR	5.80	EA	FLANGE UNIT,4-HOLE,1-15/16in,SS LKG	38.16
	Y	390	4F32SCR	6.96	EA	FLANGE UNIT,4-HOLE,2in,SET SCREW LOCKING	45.77
	N	526	5	0.42	EA	PLATE,SIDE 90 DEG BEND	1.60
	N	090	500	0.01	EA	GREASE FTG 5/16in DRIVE-IN	0.65
	N	505-1	5051000	1.20	EA	CONTROLLER, REMOTE, PENDANT, 9 FT CABLE	178.00
	N	505-1	5051100	38.60	EA	MOUNT KIT, LIFTDOGG, GM 1500 01-06	185.00
	N	505-1	5051105	44.50	EA	MOUNT KIT, LIFTDOGG, GM 07+	178.00
	N	505-1	5051200	43.10	EA	MOUNT KIT, LIFTDOGG, FORD F150-350 73-96	178.00
	N	505-1	5051205	35.50	EA	MOUNT KIT, LIFTDOGG, F150 1997-2013	178.00
	N	505-1	5051206		EA	MOUNT KIT, LIFTDOGG,FORD F-150, 2015+	178.00

Buyers Products Company * 9049 Tyler Blvd. * Mentor, OH 44060 *
*** F.O.B. Mentor, Ohio * $25.00 Minimum Order**

Price List in Effect on 12/1/2016 * For ALL Items in Catalogs * Marking NEW Pricing on Items Changed Since 11/1/2016

	N	505-1	5051210	38.50	EA	MOUNT KIT, LIFTDOGG, F250 99+	178.00
	N	505-1	5051300	47.50	EA	MOUNT KIT, LIFTGATE, FITS: DODGE	178.00
	N	505-1	5051400	30.00	EA	MOUNT KIT,LIFTGATE,TOYOTA TUNDRA T-50	178.00
	N	090	511	0.01	EA	GREASE FTG 3/16in DRIVE-IN	0.50
	N	090	515	0.01	EA	GREASE FTG 1/4in,DRIVE,STRAIGHT	0.45
	Y	030	5153XBA	1.17	EA	JOURNAL ASSEMBLY	13.68
	N	290	516	0.02	EA	THROTTLE STOP ASSEMBLY	0.95
	N	520	5201000	19.00	EA	TAILGATE ASSIST,EZ GATE	179.00
	N	520	5201005	7.92	EA	MOUNT, WATER COOLER, 5 GAL, WHITE	59.90
	N	520	5201010	8.00	EA	CARRIER, SPARE TIRE	78.90
	N	520	5201100	0.59	EA	DOCUMENT HOLDER, STNLS STL,25/mstr ctn	11.75
	Y	260	5203BBU048	1.75	EA	CABLE,PUSH-PULL,BB,1/4inx48in	35.10
	Y	260	5203BBU060	2.00	EA	CABLE,PUSH-PULL,BB,1/4inx60in	37.25
	Y	260	5203BBU072	2.35	EA	CABLE,PUSH-PULL,BB,1/4inx72in	37.65
	Y	260	5203BBU084	2.25	EA	CABLE,PUSH-PULL,BB,1/4inx84in	40.35
	Y	260	5203BBU096	2.44	EA	CABLE,PUSH-PULL,BB,1/4inx96in	41.70
	Y	260	5203BBU108	2.69	EA	CABLE,PUSH-PULL,BB,1/4inx108in	43.45
	Y	260	5203BBU120	3.10	EA	CABLE,PUSH-PULL,BB,1/4inx120in	45.50
	Y	260	5203BBU132	3.00	EA	CABLE,PUSH-PULL,BB,1/4inx132in	48.95
	Y	260	5203BBU144	3.13	EA	CABLE,PUSH-PULL,BB,1/4inx144in	50.40
	Y	260	5203BBU156	3.25	EA	CABLE,PUSH-PULL,BB,1/4inx156in	51.95
	Y	260	5203BBU168	3.56	EA	CABLE,PUSH-PULL,BB,1/4inx168in	53.85
	Y	260	5203BBU192	4.00	EA	CABLE,PUSH-PULL,BB,1/4inx192in	56.60
	Y	260	5203BBU228	5.81	EA	*DISCONTINUED*CABLE,PUSH-PULL,	
	Y	260	5203BBU240	4.31	EA	CABLE,PUSH-PULL,BB,1/4inx240in	62.55
	Y	260	5203CCU060	1.75	EA	CABLE,PUSH-PULL,CC,1/4inx60in	35.90
	Y	260	5203CCU072	2.00	EA	CABLE,PUSH-PULL,CC,1/4inx72in	37.35
	Y	260	5203CCU084	2.07	EA	CABLE,PUSH-PULL,CC,1/4inx84in	38.95
	Y	260	5203CCU096	2.25	EA	CABLE,PUSH-PULL,CC,1/4inx96in	40.30
	Y	260	5203CCU108	2.50	EA	CABLE,PUSH-PULL,CC,1/4inx108in	41.95
	Y	260	5203CCU120	2.56	EA	CABLE,PUSH-PULL,CC,1.4inx120in	44.15
	Y	260	5203CCU132	2.75	EA	CABLE,PUSH-PULL,CC,1/4inx132in	47.50
	Y	260	5203CCU228	5.50	EA	*DISCONTINUE*CABLE,PUSH-PULL,CC,	
	N	523	5230710	8.45	EA	STEP, FOLDING,7in(T) x 10in(W) x 4in (D)	248.75
	N	523	5230912	7.67	EA	STEP,CABLE TYPE,9IN TALL X 12IN WIDE,BLK	145.20
	N	523	5230915	11.50	EA	STEP, CABLE, 9inTALLx15in WIDEx4.75 DP	165.55
	N	523	5231021	7.00	EA	STBD STEP, PICK-UP TRUCK,AL DIE CAST,	119.80
	N	523	5231112	11.00	EA	STEP, FLEXIBLE	189.00
	N	523	5231130	22.00	EA	STEP,FLEXIBLE, 30in WIDTH	279.85
	N	523	5231212	8.98	EA	STEP, CABLE TYPE, 12in TALL x 12in WIDE,	152.95
	N	523	5231512	10.07	EA	STEP,CABLE TYPE,15IN TALL X 12 WIDE,BLK	160.65

Buyers Products Company * 9049 Tyler Blvd. * Mentor, OH 44060 *
*** F.O.B. Mentor, Ohio * $25.00 Minimum Order**

Price List in Effect on 12/1/2016 * For ALL Items in Catalogs * Marking NEW Pricing on Items Changed Since 11/1/2016

	N	523	5231515	11.80	EA	STEP, CABLE,15in TALL x15in WIDEx4.75 DP	184.65
	N	523	5232000	21.20	EA	TRUCK STEP,RETRACTABLE LADDER,2-RUNG,	145.70
	N	523	5232001	21.20	EA	TRUCK STEP, RETRACTABLE LADDER, 2-RUNG	259.90
	N	523	5232412	9.00	EA	STEP,TWO RUNG,STEEL BLACK POWDER COAT	73.65
	N	523	5232417	20.86	EA	STEP,CABLE,TWO RUNG,24-1/4in(T)x 17in(W)	282.75
	N	523	5233000	24.86	EA	TRUCK STEP,RETRACTABLE LADDER,3-RUNG,	156.70
	N	523	5233001	24.90	EA	TRUCK STEP, RETRACTABLE LADDER, 3-RUNG	296.50
	N	523	5233612	18.50	EA	STEP, THREE RUNG, STEEL BLK PWD COAT	110.50
***	N	523	5236585	3.50	EA	FOLDING STEP, CHROME	89.00
***	N	523	5236586	3.50	EA	FOLDING STEP, ZINC	42.30
	Y	540	5401000	41.01	EA	CARRIER,CONDUIT,ALUM,121-3/8L X 11W X6H	469.75
	N	541	5411000	0.61	EA	DRAWER,BIN,REPLACEMENT,POLY	8.45
	N	541	5411005	1.08	EA	BRACKET,MOUNTING,CABINET,W/HDW,WHITE	12.90
	N	541	5411018	30.75	EA	CABINET,PARTS,18 DRAWERS,12hx11-3/4d	269.45
	N	541	5416000	9.50	EA	TRAY,STORAGE,UNDERSEAT,FORD TRUCK	158.90
	N	541	5416005	8.00	EA	TRAY,STORAGE,BEHIND-THE-SEAT,FORD TRUCK	139.80
	N	542	5421012	89.00	EA	HITCH,WEIGHT DISTRIBUTING,TRUNNION BAR	339.80
	N	542	5422010	0.41	EA	SWITCH,BREAKAWAY,12V W/48in LEAD, 48in	8.75
	N	542	5422012	0.10	EA	PIN AND CABLE,REPLACEMENT FOR BREAKAWAY	3.30
	N	542	5423203	0.41	EA	CONVERTOR,TAIL LIGHT,3-2(6 AMP) SOLID	18.92
	N	543	5431000	13.62	EA	CONTROL,FRICTION SWAY	57.98
	N	547	5471000	0.73	EA	RETAINER, SAFETY CHAIN, 5/16in, FORGED	2.40
	N	547	5471001	1.06	EA	RETAINER, SAFETY CHAIN, 3/8in, FORGED	3.55
	N	548	5480005	8.00	EA	TIEDOWN,RATCHET,ANGLE MOUNT,(2) PC BLACK	79.80
	N	548	5480007	7.83	EA	TIEDOWN,RATCHET,PIPE MOUNT,(2) PC BLACK	79.80
	N	548	5480010	4.20	EA	TIE DOWN,RETRACTING, RATCHET, (1) PC,	49.00
	N	520	5480011	4.50	EA	TIE DOWN,RETRACTING, RATCHET, (1) PC,	49.00
	N	548	5480375	0.33	EA	SHACKLE,ANCHOR 3/8in,1 ton,SCREW	2.50
	N	548	5480417	0.39	EA	TIES,(4)PACK,17in,SOFT FOAM RED	5.98
	N	548	5482100	4.00	EA	WINCH,LASHING,2in,10,000 LB MBS,3,333 LB	18.80
	Y	553	5531000	986.00	EA	DUMPERDOGG,8FT,DUMP INSERT,STEEL	3,444.00

Buyers Products Company * 9049 Tyler Blvd. * Mentor, OH 44060 *
*** F.O.B. Mentor, Ohio * $25.00 Minimum Order**

Price List in Effect on 12/1/2016 * For ALL Items in Catalogs * Marking NEW Pricing on Items Changed Since 11/1/2016

	Y	553	5531006	920.00	EA	DUMPERDOGG,6FT,DUMP INSERT,STEEL	3,444.00
	Y	553-1	5531010	83.00	EA	DUMPERDOGG, CAB GUARD, STEEL,BLACK	292.00
	Y	553-1	5531020	15.00	EA	DUMPERDOGG,BRACKET KIT,SIDE EXT, STEEL	186.00
	Y	553	5532000	1,115.00	EA	DUMPERDOGG,8FT,DUMP INSERT,POLY	3,988.00
	Y	553	5534000	988.00	EA	DUMPERDOGG,8ft,STAINLESS STL DUMP INSERT	4,480.00
	Y	553	5534006	875.00	EA	DUMPERDOGG,6ft,STAINLESS STL DUMP INSERT	4,480.00
	Y	553-1	5534010	55.00	EA	DUMPERDOGG,STAINLESS STEEL CAB GUARD	465.00
	Y	553-1	5534020	14.00	EA	DUMPERDOGG,STAINLESS STL, BRKT KIT,SIDE	225.00
	Y	553	5535000	291.00	EA	SPREADER, DUMP INSERT,STAINLESS STEEL	3,950.00
	Y	554	5540001	2.50	EA	BRACKET,STOP,TARP,ALUMINUM KIT	107.10
	Y	554	5540002		EA	WEDGES, CENTERING, TARP, POLY, PAIR	38.90
	N	554-3	5540710	1.09	EA	SWITCH KIT,ROTARY	48.00
	N	554-3	5541005	0.59	EA	COVER,PLASTIC,CHROME,600W GEAR MOTOR	32.50
	N	542	5541006	0.65	EA	COVER,PLASTIC,CHROME,900W GEAR MOTOR	32.50
	N	554-3	5541065	13.50	EA	GEAR MOTOR,TARP,12VDC,900 W, 60:1,1YR	267.40
	N	554-3	5541095	13.25	EA	GEAR MOTOR,TARP,12 VDC,600 W,90:1,1 YR	249.75
	Y	554	5542000	92.01	EA	TARP KIT,PULL-TYPE,ALUM,96in	639.65
	Y	554	5542090	92.01	EA	TARP KIT,PULL-TYPE,ALUM,91in	622.50
	Y	554	554250120	97.50	EA	TARP KIT,PULL STYLE W/5ft x 12ft	551.45
	Y	554	554260140	99.50	EA	TARP KIT,PULL STYLE W/6ft x 14ft	659.95
	Y	554	554265150	100.50	EA	TARP KIT,PULL STYLE W/6-1/2ft x 15ft	689.90
	Y	554	554270150	101.00	EA	TARP KIT,PULL STYLE W/7ft x 15ft	728.60
	Y	554	554270152	105.00	EA	TARP KIT,PULL STYLE W/7ft x 15ft	788.25
	Y	554	554270155	100.01	EA	TARP KIT,PULL STYLE W/7ftX15ft MESH	728.60
	Y	554	554270156		EA	TARP KIT, PULL STYLE W/7ft X 15ft SOLID	788.25
	Y	554	554275150	102.00	EA	TARP KIT,PULL STYLE W/7-1/2ft x 15ft	755.50
	Y	554	554275152	108.00	EA	TARP KIT,PULL STYLE W/7-1/2ft x 15ft	811.55
	Y	554	5543000	97.01	EA	TARP KIT,ALUM ARMS, 3 SPR, W/ GROUND	917.80
	Y	554	5543006	94.01	EA	TARP KIT, ALUM ARMS, 3 SPR, w/GROUND	867.80
	N	554-3	5543095	12.00	EA	GEAR MOTOR,TARP,12 VDC,600 W,90:1,3 YR	279.80
	N	554-3	5543895	13.50	EA	GEAR MOTOR,TARP,12 VDC,900 W,90:1,3 YR	267.40
	N	554-3	5543965	13.50	EA	GEAR MOTOR,TARP,12VDC,900 W, 60:1,3YR	307.20
	N	554-2	5544000	126.00	EA	TARP KIT,12V,ALUM,4 SPR,600W/90:1 1YR	1,333.00
	N	554-2	5544006	114.00	EA	TARP KIT,12V,ALUM,4 SPR,600W/90:1 1YR	1,284.00

Buyers Products Company * 9049 Tyler Blvd. * Mentor, OH 44060 *
*** F.O.B. Mentor, Ohio * $25.00 Minimum Order**

Price List in Effect on 12/1/2016 * For ALL Items in Catalogs * Marking NEW Pricing on Items Changed Since 11/1/2016

	N	554-2	5544300	126.00	EA	TARP KIT,12V,ALUM,4 SPR,600W/90:1 3YR	1,395.00
	N	554-2	5544306	114.00	EA	TARP KIT,12V,ALUM,4 SPR,600W/90:1 3YR	1,344.00
	N	554-2	5544365	127.50	EA	TARP KIT,12V,ALUM,4 SPR,900W/60:1 3YR	1,450.00
	N	554-2	5544366	115.10	EA	TARP KIT,12V,ALUM,4 SPR,900W/60:1 3YR	1,398.00
	N	554-2	5544395	127.50	EA	TARP KIT,12V,ALUM,4 SPR,900W/90:1 3YR	1,450.00
	N	554-2	5544396	115.10	EA	TARP KIT,12V,ALUM,4 SPR,900W/90:1 3YR	1,398.00
	N	554-3	5544621	19.00	EA	CHAIN GUARD, DTG, STEEL, BLACK	91.50
	N	554-2	5545000	142.00	EA	TARP KIT,12V,ALUM,5 SPR,600W/90:1 1YR	1,395.00
	N	554-2	5545006	130.00	EA	TARP KIT,12V,ALUM,5 SPR,600W/90:1 1YR	1,344.00
	N	554-2	5545300	142.00	EA	TARP KIT,12V,ALUM,5 SPR,600W/90:1 3YR	1,475.00
	N	554-2	5545306	130.00	EA	TARP KIT,12V,ALUM,5 SPR,600W/90:1 3YR	1,424.00
	N	554-2	5545365	143.50	EA	TARP KIT,12V,ALUM,5 SPR,900W/60:1 3YR	1,530.00
	N	554-2	5545366	131.50	EA	TARP KIT,12V,ALUM,5 SPR,900W/60:1 3YR	1,480.00
	N	554-2	5545395	143.50	EA	TARP KIT,12V,ALUM,5 SPR,900W/90:1 3YR	1,530.00
	N	554-2	5545396	131.50	EA	TARP KIT,12V,ALUM,5 SPR,900W/90:1 3YR	1,480.00
	N	554-2	5546000		EA	TARP KIT,12V,ALUM,UNDBDY SPR,8ft-19ft	1,398.00
	N	554-2	5546006	118.01	EA	TARP KIT,12V,ALUM,UNDBDY SPR,8ft-19ft	1,348.00
	N	554-2	5546300	130.01	EA	TARP KIT,12V,ALUM,UNDBDY SPR,8ft-19ft	1,458.00
	N	554-2	5546306	118.01	EA	TARP KIT,12V,ALUM,UNDBDY SPR,8ft-19ft	1,398.00
	N	554-2	5546365	130.01	EA	TARP KIT,12V,ALUM,UNDBDY SPR,8ft-19ft	1,514.00
	N	554-2	5546366	118.01	EA	TARP KIT,12V,ALUM,UNDBDY SPR,8ft-19ft	1,464.00
	N	554-2	5546395	130.01	EA	TARP KIT,12V,ALUM,UNDBDY SPR,8ft-19ft	1,514.00
	N	554-2	5546396	130.01	EA	*DISCONTINUED*TARP KIT,12V,ALUM,	1,464.00
	N	554-2	5547000	142.01	EA	TARP KIT,12V,ALUM,UNDBDY SPR,14ft-23ft	1,458.00
	N	554-2	5547006	130.01	EA	TARP KIT,12V,ALUM,UNDBDY SPR,14ft-23ft	1,398.00
	N	554-2	5547300	142.01	EA	TARP KIT,12V,ALUM,UNDBDY SPR,14ft-23ft	1,518.00
	N	554-2	5547306	130.01	EA	TARP KIT,12V,ALUM,UNDBDY SPR,14ft-23ft	1,468.00
	N	554-2	5547365	142.01	EA	TARP KIT,12V,ALUM,UNDBDY SPR,14ft-23ft	1,596.00

Buyers Products Company * 9049 Tyler Blvd. * Mentor, OH 44060 *
*** F.O.B. Mentor, Ohio * $25.00 Minimum Order**

Price List in Effect on 12/1/2016 * For ALL Items in Catalogs * Marking NEW Pricing on Items Changed Since 11/1/2016

	N	554-2	5547366	130.01	EA	TARP KIT,12V,ALUM,UNDBDY SPR,14ft-23ft	1,546.00
	N	554-2	5547395	142.01	EA	TARP KIT,12V,ALUM,UNDBDY SPR,14ft-23ft	1,596.00
	N	554-2	5547396	130.01	EA	TARP KIT,12V,ALUM,UNDBDY SPR,14ft-23ft	1,546.00
	N	556	5562001	2.50	EA	TRUCK SUSPENSION KIT,GM,FRONT	139.75
	N	556	5562009	5.09	EA	SUSPENSION KIT,TRUCK,GM,1500SERIES,FRONT	139.75
	N	557	5571000	0.53	EA	REMOTE CONTROL, WIRELESS, FOR 5571200/	69.98
	N	557	5571001	4.13	EA	BLOCK,SNATCH FOR 5571200/5579500	36.00
	N	557	5571002	2.28	EA	SHACKLE, 3/4in, 4.8 TON WLL,FOR 5571200/	8.50
	N	557	5571003	28.83	EA	CHANNEL,MOUNTING,UNIVERSAL,FOR 5571200/	59.98
	N	557	5571004	20.13	EA	MOUNT,CHANNEL,JEEP 86-06 FOR 5571200/	76.00
	N	557	5571005	25.58	EA	MOUNT,RECEIVER,ELECTRIC WINCH	79.60
	N	557	5571006	2.46	EA	REMOTE CONTROL, CORDED,30ft FOR 5571200/	68.90
	N	557	5571007	10.20	EA	HARNESS,WIRING,AUXILIARY,25FT,ELEC TRIC	149.95
	N	557	5571008	10.64	EA	ROLLER,FAIRLEAD, FOR 5571200/5579500	62.50
	N	557	5571200	86.20	EA	WINCH,12,000LB,12VDC 4.9HP W/3/8inX100ft	799.90
	N	557	5579500	80.90	EA	WINCH,9,500LB,12VDC,4.9 HP W/3/8inX100ft	732.90
	N	560	5601000	0.04	EA	FUSE TAP,DUAL ATM TYPE,MINI,12VDC 10 AMP	10.75
	N	560	5601005	0.04	EA	FUSE TAP,DUAL ATM TYPE,LOW PROFILE,12VDC	11.94
	N	560	5601007	0.04	EA	FUSE TAP,DUAL ATR TYPE,MICRO,12VDC	11.94
	N	560	5601010	0.04	EA	FUSE TAP,DUAL ATO/ATC TYPE,12VDC 10 AMP	10.75
	N	560	5601012	0.25	EA	DISCONNECT, POWER, VOLTAGE, LOW, 5 MIN	58.50
	N	560	5601015	0.78	EA	REPLACEMENT KIT, QUICK CONNECT FOR	31.95
	N	560	5601016	0.78	EA	REPLACEMENT KIT,BLUE QUICK CONNECT FOR	31.95
	N	560	5601020	2.70	EA	CABLE,BATTERY,6 FT w/GRAY QUICK CONNECT	42.50
	N	560	5601021		EA	CABLE,BATTERY,6FT W/BLUE QUICK CONNECT	42.50
	N	560	5601025	13.00	EA	CABLES,BOOSTER,28 FT W/GRAY PLUG-IN	143.35
	N	560	5601026	13.00	EA	CABLES,BOOSTER,28FT W/BLUE PLUG-IN	143.35
	N	560	5601100	0.74	EA	BOX,JUNCTION,ELECTRICAL,PLASTIC W/	10.90
	N	560	5601101	0.58	EA	BOX,JUNCTION,ELECTRICAL,PLASTIC W/7 CODE	10.50

Buyers Products Company * 9049 Tyler Blvd. * Mentor, OH 44060 *
*** F.O.B. Mentor, Ohio * $25.00 Minimum Order**

Price List in Effect on 12/1/2016 * For ALL Items in Catalogs * Marking NEW Pricing on Items Changed Since 11/1/2016

	N	560	5609000	3.19	EA	UNIVERSAL,REAR DOT TRUCK & TRLR WIRE	159.50
	N	560	5609001	3.33	EA	UNIVERSAL,REAR DOT TRUCK & TRLR WIRE	162.50
	Y	561	5611400	17.50	EA	STBD EXTENDER, GOOSENECK,	170.90
	Y	561	5613100	110.60	EA	GOOSENECK,FLIP-BALL,2-5/16IN,30K,GM	451.00
	Y	561	5613101A	119.95	EA	GOOSENECK, FLIP-BALL 2-5/16IN, 30K, GM	451.00
	Y	561	5613200	98.00	EA	GOOSENECK, FLIP-BALL, 2-5/16IN, 30K,FORD	451.00
	Y	561	5613201	92.00	EA	GOOSENECK, FLIP-BALL, 2-5/16IN, 30K,FORD	451.00
	Y	561	5613300	111.00	EA	GOOSENECK, FLIP-BALL, 2-5/16IN,30K,DODGE	451.00
	Y	561	5613301	122.00	EA	GOOSENECK, FLIP-BALL, 2-5/16IN,30K,DODGE	451.00
	Y	561	5613302	106.30	EA	GOOSENECK, FLIP-BALL, 2-5/16IN,30K,DODGE	451.00
	Y	561	5613303	49.00	EA	GOOSENECK, FLIP-BALL,2-5/16IN,30K,DODGE	451.00
	Y	561	5613304	59.50	EA	GOOSENECK, FLIP-BALL,2-5/16IN,30K,DODGE	451.00
	Y	561	5613500	25.00	EA	GOOSENECK,FLIP-BALL,2-5/16IN,FLATBED KIT	249.70
	N	562	5620250	0.03	EA	PLUG,MALE,2-PIN,IN-LINE,6in,25 PC MULT	0.95
	N	562	5620350	0.03	EA	PLUG,MALE,3-PIN,RT-ANGLE,12in,25 PC MULT	1.06
	N	562	5620351	0.07	EA	PLUG ADAPTER,AMP STYLE FEMALE TO	3.00
	N	562	5620352	0.03	EA	PLUG,AMP STYLE FEMALE TO #10 RING	2.30
	N	562	5620354	0.06	EA	PLUG ADAPTER,AMP STYLE FEMALE TO RT	2.90
	N	562	5620355	0.05	EA	PLUG,3-WIRE,STRAIGHT 3-PIN MOLDED MALE	1.04
	N	562	5621001	0.07	EA	CONTROLLER,STROBE,LED,12VDC,1.25 AMPS	22.50
	N	562	5621010	0.12	EA	EQUALIZER,LED TURN SIGNAL	10.70
	N	562	5621012	0.15	EA	EQUALIZER,LED SIGNAL W/PL3 PLUG	11.50
	N	562	562109166	1.37	EA	LIGHT,STRIP,108in,CLEAR,COOL,12V,162 LED	105.30
	N	562	562133202	1.37	EA	LIGHT,STRIP,132in,CLEAR,COOL,12V,201 LED	124.90
	N	562	5621534	0.10	EA	LIGHT,1.5in ROUND,LICENSE UTILITY,4 LED,	9.25
	N	562	5621711	0.41	EA	LIGHT,17in,RECT,STOP/TURN/TAIL,RED 11LED	15.95
	N	562	5621719	0.65	EA	LIGHT,17in RECTANGULAR ID BAR,MARKER,	18.90
	N	562	5621720	0.33	EA	LIGHT,ID MARKER,9 LED,RED,14in SST	23.50
	Y	562-1	5621827	0.31	EA	LIGHT,STRIP,18in,CLEAR,WARM,12VDC,27LED	23.85
	N	562	56218270	0.34	EA	LIGHT,STRIP,18in,CLEAR,WARM,12 VDC 27LED	39.00

Buyers Products Company * 9049 Tyler Blvd. * Mentor, OH 44060 *
*** F.O.B. Mentor, Ohio * $25.00 Minimum Order**

Price List in Effect on 12/1/2016 * For ALL Items in Catalogs * Marking NEW Pricing on Items Changed Since 11/1/2016

	Y	562-1	5621928	0.31	EA	LIGHT,STRIP,18in,CLEAR,COOL,12VDC,27 LED	23.85
	N	562	5622032	0.07	EA	LIGHT,2in,LICENSE PLATE,12V,2-LED CHROME	9.95
	N	562	5622050	0.07	EA	GROMMET,BLK,2in,LIGHT,REC,10 PC MULT	0.76
	N	562	5622101	0.18	EA	LIGHT,2in ROUND,MARKER,1 LED,RED W/	5.65
	N	562	5622103	0.09	EA	LIGHT,MARKER,3 LED,RED,2.5in RECT	6.00
	N	562	5622104	0.50	EA	LIGHT,MARKER,3LED, RED,2.5in RECT 10PC	4.72
	N	562	5622130	0.05	EA	LIGHT,2in,LICENSE PLATE,12V,2-LED,BLACK	8.36
	N	562	5622132	0.07	EA	LIGHT,2in,LICENSE PLATE,12V,2-LED,CHROME	8.60
	N	562	5622133	0.08	EA	LIGHT,2in,LICENSE PLATE,12V,2-LED,CHROME	8.80
	N	562	5622134	0.12	EA	LIGHT,2in LICENSE PLATE,12V,2-LED,CHROME	10.30
	N	562	5622150	0.07	EA	LIGHT,2in RD,MARKER,1 LED,RED,10 PC MULT	3.90
	N	562	5622154	0.07	EA	LIGHT,2in RD,MARKER,RED,4 LED,10 pc mult	4.99
	N	562	5622201	0.18	EA	LIGHT,2in RD,MARKER,1 LED,AMBER,W/	5.65
	N	562	5622203	0.09	EA	LIGHT,MARKER,3 LED,AMBER,2.5in RECT	6.00
	N	562	5622204	0.04	EA	LIGHT, MARKER,3 LED,AMBER,2.5inRECT 10PC	4.72
	N	562	5622205	0.05	EA	GROMMET,BLACK,2-1/2in,LIGHT,RECT	0.82
	N	562	5622250	0.07	EA	LIGHT,2inRD,MARKER,1LED,AMBER,10 PC MULT	3.90
	N	562	5622254	0.07	EA	LIGHT,2inRD,MARKER,AMBER,4LED,10 pc mult	4.99
	N	562	5622304	0.05	EA	LIGHT,MARKER,3LED, CLEAR,2.5in RECT 10PC	6.28
	Y	562-1	5622436	0.35	EA	LIGHT,STRIP,24in,CLEAR,WARM,12VDC,36 LED	30.60
	N	562	56224360	0.39	EA	LIGHT,STRIP,24in,CLEAR,WARM,12 VDC 36LED	45.80
	N	562	5622505	0.08	EA	GROMMET,BLK,2.5in,LIGHT,REC,10 PC MULT	0.98
	N	562	5622506	0.08	EA	GROMMET,BLACK,2.5in,LIGHT,REC,10 PC	0.82
	N	562	5622512	0.10	EA	LIGHT,2.5in,RD,MARKER,2 LED,RED,10 PC	4.38
	N	562	5622514	0.25	EA	LIGHT,2.5in RD,MARKER,4 LED,RED,W/	7.10
	N	562	5622517	0.08	EA	LIGHT,2.5in RD, MARKER,7 LED,RED,W/	10.20
	N	562	5622522	0.11	EA	LIGHT,2.5in,RD,MARKER,2 LED,AMBER,10 PC	4.38
	N	562	5622524	0.25	EA	LIGHT,2.5in RD,MARKER,4 LED,AMBER,W/	7.10
	N	562	5622525	0.11	EA	LIGHT,2.5RD,MARKER,4LED,AMBER,10 PC MULT	5.10
	N	562	5622526	0.11	EA	LIGHT,2.5in RD,MARKER,4LED,AMBER 10 MIN	5.15

Buyers Products Company * 9049 Tyler Blvd. * Mentor, OH 44060 *
*** F.O.B. Mentor, Ohio * $25.00 Minimum Order**

Price List in Effect on 12/1/2016 * For ALL Items in Catalogs * Marking NEW Pricing on Items Changed Since 11/1/2016

	N	562	5622527	0.08	EA	LIGHT,2.5in RD, MARKER,7 LED,AMBER,W/	10.20
	Y	562-1	5622537	0.35	EA	LIGHT,STRIP,24in,CLEAR,COOL,12VDC,36 LED	30.60
	N	562	5622550	0.11	EA	LIGHT,2.5inRD,MARKER,4LED,RED,10 PC MULT	5.10
	N	562	5622551	0.11	EA	LIGHT,2.5in RD, MARKER,4 LED,RED 10 MIN	5.15
	Y	562-1	5622638	0.35	EA	LIGHT,STRIP,24in,RED,12VDC,36 LED	32.60
	N	562	5622716	0.14	EA	LIGHT,2-7/8in,RECT,MARKER,RED,6 LED W/	5.20
	N	562	5622726	0.14	EA	LIGHT,2-7/8in,RECT,MARKER,AMBER,6 LED W/	5.20
	Y	562-1	5622739	0.35	EA	LIGHT,STRIP,24in,BLUE,12VDC,36 LED	32.60
	N	562	5622754	0.17	EA	LIGHT,2-3/4in,LICENSE PLATE,12V.4-LED	10.90
	N	562	5623000	0.55	EA	REFLECTORS,RED,3.0in ROUND, STICK-ON	123.20
	N	562	5623001	0.55	EA	REFLECTORS,AMBER,3.0in ROUND, STICK-ON	123.20
	N	562	5623050	0.11	EA	GROMMET,BLACK,3-1/8in,LIGHT,RECT	1.98
	N	562	5623112	0.23	EA	LIGHT,3-1/8in,RECT.MARKER RED W/	9.65
	N	562	5623113	0.08	EA	LIGHT,3-1/8in RECT,MARKER,RED,2 LED W/	7.75
	N	562	5623122	0.23	EA	LIGHT,3-1/8in,RECT.MARKER AMBER W/	9.65
	N	562	5623123	0.08	EA	LIGHT,3-1/8in RECT,MARKER,AMBER,2 LED W/	7.75
	N	562	5623316	0.01	EA	REFLECTOR, RED, 3-3/16in ROUND,BOLT-ON	0.88
	N	562	5623317	0.01	EA	REFLECTOR, AMBER, 3-3/16in ROUND,BOLT-ON	0.88
	N	562	5623413	0.03	EA	LIGHT, .75in, RD MARKER,1 LED,RED,W/	4.10
	N	562	5623414		EA	LIGHT,.75in,RD MARKER,1LED,RED,W/GROMMET	3.70
	N	562	5623423		EA	LIGHT, .75in RD MARKER, 1 LED, AMBER W/	4.10
	N	562	5623424	0.02	EA	LIGHT,.75in,RD MARKER,1LED,AMBER,W/	3.70
	N	562	5623520	2.20	EA	REFLECTORS,RED,2.0in x 3.5in, RECT	299.90
	N	562	5623521	2.20	EA	REFLECTORS,AMBER,2.0in x 3.5in, RECT	299.90
	Y	562-1	5623654	0.40	EA	LIGHT,STRIP,36in,CLEAR,WARM,12VDC,54LED	39.78
	N	562	56236540	0.43	EA	LIGHT,STRIP,36in,CLEAR,WARM,12 VDC 54LED	53.90
	N	562	5623711	0.15	EA	LIGHT,3-3/4in,RECT,MARKER,AMBER/RED,2	7.80
	N	562	5623712	0.09	EA	LIGHT,3-3/4in,RECT,MARKER,AMBER/RED,2	5.45
	N	562	5623750	0.06	EA	BRACKET,MOUNTING LIGHT	1.98
	Y	562-1	5623755	0.40	EA	LIGHT,STRIP,36in,CLEAR,COOL,12VDC,54 LED	39.78

Buyers Products Company * 9049 Tyler Blvd. * Mentor, OH 44060 *
*** F.O.B. Mentor, Ohio * $25.00 Minimum Order**

Price List in Effect on 12/1/2016 * For ALL Items in Catalogs * Marking NEW Pricing on Items Changed Since 11/1/2016

	N	562	5623812	0.04	EA	LIGHT,3-3/4in, RECT,MARKER,RED, 2 LED	2.78
	N	562	5623822	0.04	EA	LIGHT,3-3/4in, RECT,MARKER,AMBER, 2 LED	2.78
	N	562	5624050	0.15	EA	GROMMET,BLACK,4in,LIGHT,REC,10 PC MULT	1.30
	N	562	5624110	0.70	EA	LIGHT,4in ROUND,STOP/TURN/TAIL,10 LED,	16.00
	N	562	5624118	0.80	EA	LIGHT,4in,ROUND,STOP/TURN/TAIL,18 LED,	19.25
	N	562	5624119	0.40	EA	LIGHT,4in,ROUND,STOP/TURN/TAIL,18 LED,	16.36
	N	562	5624150	0.36	EA	LIGHT,4inROUND STOP/TURN/TAIL,10 LED,	11.40
	N	562	5624151	0.34	EA	LIGHT,4in,RD,STOP/TURN/TAIL,RED,10 LED	14.50
	N	562	5624156	0.23	EA	LIGHT,4in,ROUND,STOP/TURN/TAIL,7LED	10.70
	N	562	5624210	0.70	EA	LIGHT,4in ROUND,TURN&PARK,10 LED,AMBER	16.40
	N	562	5624251	0.34	EA	LIGHT,4in,RD,TURN&PARK,AMBER,10 LED	14.50
	N	562	5624310	0.70	EA	LIGHT,4inRD,BACK-UP,10 LED,CLEAR,W/	32.60
	N	562	5624324	0.80	EA	LIGHT,4in ROUND,BACK-UP,24 LED,CLR W/	43.30
	N	562	5624325	0.42	EA	LIGHT,4in,ROUND,BACK-UP,CLEAR,24 LED	43.10
	N	562	5624350	0.36	EA	LIGHT,4in,RD,BACK-UP,CLEAR,10 LED,10 PC	20.50
	N	562	5624352	0.37	EA	LIGHT,4in,RD,INTERIOR,CLEAR,10 LED,10 PC	23.10
	N	562	5624356	0.23	EA	LIGHT,4in,ROUND,BACK-UP,7LED,	14.85
	N	562	5624433	0.37	EA	LIGHT,4.4in,PROJECTOR,12V,3-LED,CLEAR	39.50
	Y	562-1	5624872	0.44	EA	LIGHT,STRIP,48in,CLEAR,WARM,12VDC,72 LED	49.80
	N	562	56248720	0.47	EA	LIGHT,STRIP,48in,CLEAR,WARM,12 VDC 72LED	65.00
	Y	562-1	5624973	0.44	EA	LIGHT,STRIP,48in,CLEAR,COOL,12VDC,72 LED	49.80
	N	562	5625030	0.50	EA	LIGHT,5in,ROUND,DOME,INTERIOR W/ON-OFF	12.30
	Y	562-1	5625074	0.44	EA	LIGHT,STRIP,48in,RED,12VDC,72 LED	52.20
	N	562	5625115	0.71	EA	LIGHT,5.3in,RECT.,STOP/TURN/TAIL,15 LED,	24.90
	Y	562-1	5625175	0.44	EA	LIGHT,STRIP,48in,BLUE,12VDC,72 LED	52.20
	N	562	5625215	0.71	EA	LIGHT,5.3in,RECT. TURN & PARK,AMBER 15	24.90
	N	562	5625332	0.55	EA	LIGHT,5.3in,RECT. BACK-UP,CLEAR,32 LED	41.80
	N	562	5625336	0.39	EA	LIGHT, INTERIOR, 5.1in RD, CLEAR, 36 LED	39.90

Buyers Products Company * 9049 Tyler Blvd. * Mentor, OH 44060 *
*** F.O.B. Mentor, Ohio * $25.00 Minimum Order**

Price List in Effect on 12/1/2016 * For ALL Items in Catalogs * Marking NEW Pricing on Items Changed Since 11/1/2016

	N	562	5625337	0.41	EA	LIGHT, INTERIOR, 5.1in RD, CLEAR, 36 LED	
	N	562	5625338	0.41	EA	LIGHT, INTERIOR, 5.1in RD, CLEAR, 36 LED	
	N	562	5625576	6.00	EA	LIGHT,ROPE,52.5ft,CLEAR,12VDC,576 LED	249.80
	N	562	5626050	0.18	EA	GROMMET,BLACK,6.5inLIGHT,REC,10 PC MULT	1.34
	N	562	5626090	0.55	EA	LIGHT,STRIP,60in,CLEAR,WARM,12 VDC 90LED	62.50
	N	562	5626156	0.23	EA	LIGHT,6in,OVAL,STOP/TURN/TAIL,6LED	10.70
	N	562	5626191	0.55	EA	LIGHT,STRIP,60in,CLEAR,COOL,12 VDC,90LED	62.50
	N	562	5626208	0.30	EA	LIGHT,6.5in,OVAL,MID-TURN-MARKER,AMBER,	14.36
	N	562	5626209	0.50	EA	LIGHT,6.5in,OVAL. MID-TURN-MARKER,AMBER	20.00
	N	562	5626210	0.70	EA	LIGHT,6.5in,OVAL,TURN&PARK,10LED,AMBER	16.40
	N	562	5626211	0.31	EA	LIGHT,6.5in,OVAL,TURN&PARK,10 LED,AMBER	13.55
	N	562	5626310	0.70	EA	LIGHT,6.5in OVAL,BACK-UP,10 LED,CLEAR,W/	32.95
	N	562	5626311	0.38	EA	LIGHT,6.5in,OVAL,BACK-UP,CLEAR,10 LED	20.50
	N	562	5626324	0.86	EA	LIGHT,6.5in OVAL,BACK-UP,24 LED, CLR W/	43.70
	N	562	5626325	0.43	EA	LIGHT,6.5in,OVAL,BACK-UP,CLEAR,24 LED	40.85
	N	562	5626352	0.34	EA	LIGHT,6.5in,OVAL,INTERIOR,CLEAR,10 LED,	23.10
	N	562	5626356	0.23	EA	LIGHT,6in,OVAL,BACK-UPL,6LED	14.85
	N	562	5626510	0.70	EA	LIGHT,6.5in OVAL,STOP/TURN/TAIL,10 LED	16.40
	N	562	5626520	0.86	EA	LIGHT,6.5in,OVAL,STOP/TURN/TAIL,20 LED,	21.85
	N	562	5626521	0.31	EA	LIGHT,6.5in,OVAL,STOP/TURN/TAIL,20 LED	19.00
	N	562	5626550	0.36	EA	LIGHT,6.5inOVAL,STOP/TURN/TAIL,10LED,	12.00
	N	562	5626551	0.29	EA	LIGHT,6.5in,OVAL,STOP/TURN/TAIL,RED 10	15.15
	N	562	5626552	0.34	EA	LIGHT,6.5in OVAL,STOP/TURN/TAIL,10 LED	13.00
	N	562	5626700	0.12	EA	BRACKET,PLATE,LICENSE,PLASTIC	1.60
	N	562	5626734	1.24	EA	LIGHT,6.75in,STOP/TURN/TAIL,34 LED,BOX	63.70
	N	562	5626738	1.24	EA	LIGHT,6.75in,STOP/TURN/TAIL,38 LED,BOX	68.90
	N	562	5627501	0.01	EA	GROMMET,BLACK,.75in, 1 LED MARKER LIGHT	0.48
	N	562	5627503	0.01	EA	GROMMET,BLACK,.75in, 3 LED MARKER LIGHT	0.48
	N	562	5627511	0.05	EA	LIGHT,.75in,RD,MARKER,RED, (1) LED W/	5.80
	N	562	5627512	0.02	EA	LIGHT,.75in,RD,MARKER 1 LED,RED,W/	4.40

Buyers Products Company * 9049 Tyler Blvd. * Mentor, OH 44060 *
*** F.O.B. Mentor, Ohio * $25.00 Minimum Order**

Price List in Effect on 12/1/2016 * For ALL Items in Catalogs * Marking NEW Pricing on Items Changed Since 11/1/2016

	N	562	5627513	0.05	EA	LIGHT,.75in,RD,MARKER,3 LED,RED,W/	7.95
	N	562	5627514	0.03	EA	LIGHT,.75in,RD,MARKER,3 LED,RED,W/	6.60
	N	562	5627517	0.06	EA	LIGHT,.75iin,RD,MARKER,3 LED,RED,W/	8.20
	N	562	5627521	0.05	EA	LIGHT,.75in,RD,MARKER,AMBER, (1) LED W/	5.80
	N	562	5627522	0.02	EA	LIGHT,.75in,RD,MARKER,AMBER, (1) LED W/	4.40
	N	562	5627523	0.05	EA	LIGHT,.75in,RD,MARKER,3 LED,AMBER,W/	7.95
	N	562	5627524	0.03	EA	LIGHT,.75in,RD,MARKER,3LED,AMBER,W/	6.60
	N	562	5627527	0.06	EA	LIGHT,.75iin,RD,MARKER,3 LED,AMBER,W/	8.20
	N	562	5627532		EA	LIGHT,.75in,RD,MARKER 1 LED,CLEAR,W/	5.80
	N	562	5627533	0.50	EA	LIGHT, ID MARKER,(9) LED,RED,3/4in, W/	30.45
	N	562	56296144	0.88	EA	LIGHT,STRIP,96in,CLEAR,WARM,12VDC,144LED	93.50
	N	562	56297145		EA	LIGHT,STRIP,96in,CLEAR,COOL,12VDC,144LED	93.50
	N	562	56298146	0.88	EA	LIGHT,STRIP,96in,AMBER,12VDC,144LED	93.50
	N	565	5651530	0.07	EA	LIGHT,1-1/2in,RD,LICENSE,CLEAR,CHROME	2.32
	N	565	5651700	0.34	EA	LIGHT,17in,RECT,ID BAR MARKER,RED,	9.28
	N	565	5652001	0.05	EA	LIGHT,2in,RD,MARKER,RED,INCANDESCENT	1.66
	N	565	5652002	0.50	EA	LIGHT,2in,RD,MARKER,AMBER,INCANDESCENT	1.66
	N	565	5652030	0.06	EA	LIGHT,2in,RECT,LICENSE,CLEAR,CHROME,	3.14
	N	565	5652501	0.06	EA	LIGHT,2-1/2in,RD,MARKER,RED,	1.78
	N	565	5652502	0.06	EA	LIGHT,2-1/2in,RD,MARKER,AMBER,	1.78
	N	565	5652511	0.06	EA	LIGHT,2-1/2in,RD,MARKER,RED,	1.92
	N	565	5652512	0.06	EA	LIGHT,2-1/2in,RD,MARKER,AMBER,	1.92
	N	565	5652630	0.16	EA	LIGHT,2-5/8in,LICENSE,CLEAR,CHROME,	3.70
	N	565	5652720	0.10	EA	LIGHT,2-7/8in,RECT,MARKER,AMBER,	1.78
	N	565	5653375	0.05	EA	LIGHT,LICENSE PLATE,CLEAR,INCANDESCENT	2.52
	N	565	5653376	0.26	EA	BRACKET,LICENSE PLATE LIGHT,BLK PLASTIC	2.48
	N	565	5653701	0.06	EA	LIGHT,3-3/4in,RECT,MARKER,RED,	1.36
	N	565	5653702	0.06	EA	LIGHT,3-3/4in,RECT,MARKER,AMBER,	1.36
	N	565	5654100	0.23	EA	LIGHT,4in,RD,STOP/TURN/TAIL,RED,	4.16
	N	565	5654300	0.23	EA	LIGHT,4inRD,BACK-UP,CLEAR,INCANDESCENT	4.52
	N	565	5655000	0.45	EA	LIGHT,5in,STOP/TURN/TAIL,RED,BOX STYLE	5.18
	N	565	5655001	0.47	EA	LIGHT,5in,STOP/TURN/TAILW/LICENSE,RED,	5.62
	N	565	5655100	0.50	EA	LIGHT,5in,STOP/TURN/TAIL,RED,BOX STYLE,	5.32
	N	565	5655101	0.52	EA	LIGHT,5in,STOP/TURN/TAIL W/LICENSE,RED,	5.74

Buyers Products Company * 9049 Tyler Blvd. * Mentor, OH 44060 *
*** F.O.B. Mentor, Ohio * $25.00 Minimum Order**

Price List in Effect on 12/1/2016 * For ALL Items in Catalogs * Marking NEW Pricing on Items Changed Since 11/1/2016

	N	565	5656100	0.29	EA	LIGHT,6.in OVAL,STOP/TURN/TAIL,RED	4.38
	N	565	5656300	0.29	EA	LIGHT,6-1/2in,OVAL,BACK-UP,CLEAR,	4.52
	N	512	58R14	0.57	EA	RING & CHAIN W/14 LINKS	4.60
	N	512	58R5	0.26	EA	RING AND CHAIN W/5 LINKS	2.50
	N	512	58R5SS	0.28	EA	RING AND CHAIN W/5 LINKS SS	4.96
	N	512	58R5Z	0.26	EA	RING AND CHAIN W/5 LINKS ZINC PLATED	2.96
	N	512	58R6	0.40	EA	RING & CHAIN W/6 LINKS,ZINC PL	2.85
	N	591	5910024	34.00	EA	CHAIN CARRIER,24in L X 7-1/2 W X 9 H W/	145.30
	N	290	6125B	0.01	EA	PIN,BOWDEN BRASS,KIT	2.60
	N	290	6138	0.03	EA	BOWDIN PIN 3/8in DIA.	1.98
	N	290	6170	0.03	EA	PIN,BOWDEN 7/16in DIA.	1.98
	Y	270	6203BBU048	2.22	EA	CABLE,PUSH-PULL,BB,5/16inx48in	44.55
	Y	270	6203BBU060	2.50	EA	CABLE,PUSH-PULL,BB,5/16inx60in	45.65
	Y	270	6203BBU072	2.75	EA	CABLE,PUSH-PULL,BB,5/16inx72in	48.10
	Y	270	6203BBU084	3.00	EA	CABLE,PUSH-PULL,BB,5/16inx84in	50.50
	Y	270	6203BBU096	3.25	EA	CABLE,PUSH-PULL,BB,5/16inx96in	51.05
	Y	270	6203BBU108	3.25	EA	CABLE,PUSH-PULL,BB,5/16inx108in	51.75
	Y	270	6203BBU120	3.25	EA	CABLE,PUSH-PULL,BB,5/16inx120in	53.80
	Y	270	6203BBU132	3.88	EA	CABLE,PUSH-PULL,BB,5/16inx132in	55.60
	Y	270	6203BBU144	3.13	EA	CABLE,PUSH-PULL,BB,5/16inx144in	59.60
	Y	270	6203BBU168	4.69	EA	CABLE,PUSH-PULL,BB,5/16inx168in	63.35
	Y	270	6203BBU216	5.69	EA	CABLE,PUSH-PULL,BB,5/16inx216in	71.05
	Y	270	6203BBU240	5.75	EA	CABLE,PUSH-PULL,BB,5/16inx240in	75.00
	Y	270	6203CCU072	2.50	EA	CABLE,PUSH-PULL,CC,5/16inx72in	44.85
	Y	270	6203CCU084	2.81	EA	CABLE,PUSH-PULL,CC,5/16inx84in	47.25
	Y	270	6203CCU096	3.00	EA	CABLE,PUSH-PULL,CC,5/16inx96in	47.80
	Y	270	6203CCU120	3.38	EA	CABLE,PUSH-PULL,CC,5/16inx120in	50.55
	Y	270	6203CCU204	5.19	EA	CABLE,PUSH-PULL,CC,5/16inx204in	65.95
	N	638	6381540	179.30	EA	CENTRAL HYD SYS, 4 FUNC,15 GAL WO/GPS	5,680.00
	N	638	6381541	180.00	EA	CENTRAL HYD SYS, 4 FUNC,15 GAL,W/GPS	6,180.00
	N	638	6381560	193.30	EA	CENTRAL HYD SYS, 6 FUNC,15 GAL,WO/GPS	6,040.00
	N	638	6381561	194.00	EA	CENTRAL HYD SYS, 6 FUNC,15 GAL, W/GPS	6,580.00
	N	638	6383060	200.01	EA	CENTRAL HYD SYS, 6 FUNC, 30 GAL, WO/GPS	12,025.00
	N	638	6383061	200.01	EA	CENTRAL HYDRAULIC SYSTEM, 6 FUNCTION	13,100.00
	N	638	6383062	18.01	EA	CONSOLE, SWIVEL, 6 FUNCTION	
	N	639	6391001	0.22	EA	SWITCH PANEL,SINGLE,ON-OFF ILLUMINATED,	22.25
	N	639	6391002	0.29	EA	SWITCH PANEL,DOUBLE,ON-OFF ILLUMINATED,	26.40
	N	639	6391003	0.35	EA	SWITCH PANEL,TRIPLE,ON-OFF ILLUMINATED,	32.74
	N	639	6391004	0.53	EA	SWITCH PANEL,QUAD,ON-OFF ILLUMINATED,	43.70
	N	639	6391005	2.42	EA	BATTERY DISCONNECT SWITCH,DUAL,250A	72.90

Buyers Products Company * 9049 Tyler Blvd. * Mentor, OH 44060 *
*** F.O.B. Mentor, Ohio * $25.00 Minimum Order**

Price List in Effect on 12/1/2016 * For ALL Items in Catalogs * Marking NEW Pricing on Items Changed Since 11/1/2016

	N	639	6391050	0.71	EA	BATTERY DISCONNECT SWITCH,DUAL,300A	43.00
	N	639	6391100	0.01	EA	SWITCH,ROCKER,12VDC ON/OFF RED,	4.25
	N	639	6391101	0.02	EA	SWITCH,ROCKER,12VDC ON/OFF RED,	2.62
	N	889	6391102	0.01	EA	SWITCH, ROCKER, ON-OFF MINI ROUND	2.45
	N	889	6391103	0.01	EA	SWITCH, ROCKER, ON-OFF-ON MINI ROUND	2.80
	N	639	6391104	2.40	EA	SWITCH BOX,4-FUNCTION,ILLUMINATED-ON	62.90
	N	889	6391105	0.01	EA	SWITCH, ROCKER, MOMENTARY (ON)-OFF	4.60
	N	639	6391106	2.90	EA	SWITCH BOX,6-FUNCTION,ILLUMINATED-ON	73.60
	N	639	6391200	0.22	EA	ISOLATOR,BATTERY,MASTER,SWITCH,WATER	14.75
	N	639	6391204	0.27	EA	SWITCH PANEL, (3) ON/OFF, (1) MOMENTARY,	31.80
	N	639	6391205		EA	SWITCH PANEL,(4) ON-OFF,(1) MOMENTARY	85.20
	N	639	6391206	0.39	EA	SWITCH PANEL,FULL SIZE LIGHTBAR,(4) ON/	97.80
	N	639	6391207	0.39	EA	SWITCH PANEL,ARROW STICK,(4) ON/OFF, (2)	117.35
	N	639	6391215	1.00	EA	SWITCH PANEL,ON-OFF W/FLASH PATTERN	27.90
	N	645	6451000	0.30	EA	VALVE,TOGGLE,AIR,174 PSI,1/8inNPT PORTS	14.70
	N	645	6451005	0.53	EA	VALVE,AIR,PRESSURE PROTECTION,70 PSI	19.98
	N	645	6451010	0.24	EA	VALVE,DRAIN,AIR,UNIVERSAL,AUTOMATIC SELF	5.90
	N	645	6451025	0.40	EA	REGULATOR,PRESSURE,(2) 1/8in WORK PORTS	52.70
	N	645	6451030	0.34	EA	VALVE,TOGGLE,4-WAY,5-PORT,2-POS,1/8in	45.50
	N	645	6451035	0.23	EA	GAUGE,PRESSURE,2 IN DIAL,0-160 PSI,1/8in	30.60
	N	645	6451050	2.40	EA	VALVE,CONTROL ASSM,LIFT AXLE,PUSH/PULL	224.90
	N	645	6451051	2.43	EA	VALVE,CONTROL ASSM,LIFT AXLE,TOGGLE	224.90
	N	645	6451055	2.89	EA	VALVE,CONTROL ASSY,LIFT AXLE,DOUBLE	237.90
	N	290	65	0.13	EA	KNOB,2in,PLAIN, 3/8-24 THD	3.50
	N	290	651	0.13	EA	KNOB,2in,LTR PTO,3/8-24	3.50
	N	518	66000	0.05	EA	LINCH PIN,1/4in,YELLOW ZN,BULK	0.45
	N	518	66003	0.02	EA	LYNCH PIN,3/16in,YELLOW ZN,BULK	0.55
	N	518	66006	0.06	EA	LYNCH PIN,5/16inYELLOW ZN,BULK	0.55
	N	518	66010	0.11	EA	LINCH PIN,7/16in,YELLOW ZN,BULK	0.60
	N	518	66015	0.11	EA	LYNCH PIN,7/16inHD,YELLOW ZN,BULK	0.85
	N	518	66045	0.05	EA	SNAPPER PIN,3/16X1-3/4inX1-1/2in	0.90
	N	518	66050	0.07	EA	SNAPPER PIN,1/4inX2in,YELLOW ZNC	0.90
	N	518	66053	0.11	EA	SNAPPER PIN,5/16inX2.75inYL-ZINC	0.90
	N	518	66056	0.10	EA	SNAPPER PIN,3/8inX1-5/8in,ZN YEL ASTM	1.00

Buyers Products Company * 9049 Tyler Blvd. * Mentor, OH 44060 *
*** F.O.B. Mentor, Ohio * $25.00 Minimum Order**

Price List in Effect on 12/1/2016 * For ALL Items in Catalogs * Marking NEW Pricing on Items Changed Since 11/1/2016

	N	518	66060	0.13	EA	SNAPPER PIN,3/8inX2-1/2in,ZINC	1.00
	N	518	66063	0.09	EA	SNAPPER PIN,1/4inX2.75in YE-ZINC	0.90
	N	518	66066	0.11	EA	SNAPPER PIN,1/4inX3in,YELLOWZINC	0.90
	N	518	66070	0.10	EA	SNAPPER PIN,1/4inX3.5in YEL-ZINC	0.90
	N	518	66100	0.46	EA	HITCH PIN W/COTTER,1/2inX4-1/4in	2.40
	N	518	66101	0.58	EA	HITCH PIN W/COTTER,1/2in X 4in,SILVER W/	4.90
	N	518	66102	0.48	EA	HITCH PIN W/COTTER,9/16inX2-3/4in,YELLOW	2.80
	N	518	66103	0.64	EA	HITCH PIN W/COTTER,5/8inX4-1/4in	4.00
	N	518	66105	0.80	EA	HITCH PIN W/COTTER,5/8inX6-1/4in	4.18
	N	518	66107	0.77	EA	HITCH PIN W/COTTER,5/8in X 4in,SILVER W/	6.05
	N	518	66110	0.87	EA	HITCH PIN,W/COTTER,3/4inX4-1/4in	3.75
	N	518	66111	1.13	EA	HITCH PIN W/COTTER,3/4inX 4-1/2,SILVER	7.10
	N	518	66115	1.12	EA	HITCH PIN W/COTTER,3/4inX6-1/4in	4.50
	N	518	66120	1.47	EA	HITCH PIN W/COTTER,7/8inX6-1/4in	5.40
	N	518	66122	1.42	EA	HITCH PIN W/COTTER,7/8inX 4-1/2	7.90
	N	518	66125	1.87	EA	HITCH PIN W/COTTER,1inX6-1/4in	6.95
	N	518	66127	1.70	EA	HITCH PIN W/COTTER,1in X 4-1/2in	9.45
	N	518	66130	2.34	EA	HITCH PIN W/COTTER,1-1/8inX	7.85
***	N	518	66135	3.26	EA	HITCH PIN W/COTTER,1-1/4in x 7in, YELLOW	12.45
	Y	020	7312	2.01	EA	H7 SLIP YOKE 3/4in SQ	30.30
	Y	020	73122	2.34	EA	H7 SLIP YOKE 1in SQ	37.26
	Y	020	73133	2.00	EA	H7 SLIP YOKE 7/8in RD 1/4in KW	30.30
	Y	020	73162	2.00	EA	H7 SLIP YOKE 7/8in HEX	30.30
	Y	020	73163	2.75	EA	H7 SLIP YOKE 1-1/4in RD 5/16inKW	37.26
	Y	020	7322	2.00	EA	H7 SLIP YOKE 7/8in SQ	30.30
	Y	020	7332	2.25	EA	H7 SLIP YOKE 1-1/8in HEX	37.26
	Y	020	73383	2.00	EA	H7 SLIP YOKE 1in RD 1/4in KW	30.30
	N	700	7350038	0.22	EA	LINK,QUICK CONN,3/8in,ZN PLD, WLL 2,650#	3.88
	Y	020	7351	2.32	EA	H7 SLIP YOKE 1-1/4in 6 SPLN	37.26
	Y	020	7381	1.66	EA	H7 SLIP YOKE 1-1/8in 10 SPLN	30.30
	Y	020	7383	2.00	EA	H7 SLIP YOKE 1in RD 1/4in KWF	30.30
	Y	020	74103	1.25	EA	H7 END YOKE 1-1/8in RD 1/4in KW	20.70
	Y	020	7412	1.00	EA	H7 END YOKE 7/8in SQ	17.94
	Y	020	74123	1.25	EA	H7 END YOKE 1-1/4in RD 5/16inKW	20.70
	Y	020	7413	1.00	EA	H7 END YOKE 3/4in RD 3/16in KW	17.94
	Y	020	74141	1.74	EA	H7 END YOKE 1-3/8in 6 SPL QD	33.25
	Y	020	74183	1.25	EA	H7 END YOKE 1-1/4in RD 1/4in KW	20.70
	Y	020	7422	1.14	EA	H7 END YOKE 3/4in SQ	17.94
	Y	020	74223	1.25	EA	H7 END YOKE 1-1/4 5/16KW 2SSTP	20.70
	Y	020	7423	1.00	EA	H7 END YOKE 3/4in RD 1/4in KW	17.94
	Y	020	7424	1.26	EA	*DISCONTINUED*H7 END YOKE 3/4in x	
	Y	020	74263	1.00	EA	H7 END YOKE 7/8in RD 1/4in KW	17.94
	Y	020	74282	1.00	EA	H7 END YOKE 7/8in HEX	17.94
	Y	020	74293	1.00	EA	H7 END YOKE 1in RD 1/4in KW	17.94
	Y	020	7432	1.25	EA	H7 END YOKE 1-1/8in HEX	19.38

Buyers Products Company * 9049 Tyler Blvd. * Mentor, OH 44060 *
*** F.O.B. Mentor, Ohio * $25.00 Minimum Order**

Price List in Effect on 12/1/2016 * For ALL Items in Catalogs * Marking NEW Pricing on Items Changed Since 11/1/2016

	Y	020	74323	1.30	EA	H7 END YOKE 1-1/4in RD WELD	20.70
	Y	020	7434	1.09	EA	*DISCONTINUED* H7 END YOKE 1in x	
	Y	020	74373	1.13	EA	H7 END YOKE 5/8in RD 3/16in KW	17.94
	Y	020	74393	1.00	EA	H7 END YOKE 1inR 1/4inKWF SS90	17.94
	Y	020	7443	1.00	EA	H7 END YOKE 13/16in RD 1/4in KW	17.94
	Y	020	74443	1.00	EA	H7 END YOKE 1in RD 3/8in PH	17.94
	Y	020	74481	1.00	EA	H7 END YOKE 7/8in 13 SPL	17.94
	Y	020	7452	1.25	EA	H7 END YOKE 1in SQ	20.70
	Y	020	7453	1.00	EA	H7 END YOKE 7/8in RD 3/16in KW	17.94
	Y	020	7463	1.00	EA	H7 END YOKE 7/8inR1/4inKWF SS180	17.94
	Y	020	7493	1.00	EA	H7 END YOKE 1inR 1/4inKWF SS180	17.94
	N	549	7622BP	1.10	EA	PLATE,BACK SUPPORT,ZN PLATED	4.50
	N	090	800	0.01	EA	GREASE FTG 1/8in PT STRAIGHT	0.60
	N	510	8000SSL	0.57	EA	LATCH,MINITEAR DROP,LKG,SST	11.72
	N	510	8000SSN	0.55	EA	LATCH,MINI TEAR DROP,NON LKG,	8.80
	N	549	801BP	0.92	EA	PLATE,BACK SUPPORT, PLAIN	4.40
	N	549	801BPG	0.92	EA	PLATE,B801 BACKING, GALVANIZED STEEL	
	N	549	802BPZ	1.02	EA	PLATE,BACKING,CLEAR ZINC	5.95
	N	090	815	0.03	EA	GREASE FTG 1/8in PT X 1-1/4inL	1.70
	Y	653	82123879	7.00	EA	RESERVOIR,DOMED,POLY, 8 GALLON	123.40
	Y	653	82123889	10.00	EA	RESERVOIR,DOMED,POLY, 16 GALLON	140.85
	Y	653	82123899	12.00	EA	RESERVOIR,DOMED,POLY, 26 GALLON	154.40
	Y	653	82123909	18.00	EA	RESERVOIR,HORIZ SQUARE,POLY, 30 GALLON	196.75
	Y	653	82123919	25.00	EA	RESERVOIR,HORIZ SQUARE,POLY, 50 GALLON	235.55
	Y	653	82123929	40.00	EA	RESERVOIR,HORIZ SQUARE,POLY,100 GALLON	300.20
	Y	653	82123939	28.00	EA	RESERVOIR,HORIZ W/LEGS,POLY, 65 GALLON	350.25
	Y	653	82123949	50.00	EA	RESERVOIR,HORIZ W/LEGS,POLY,125 GALLON	529.20
	Y	653	82124269	160.00	EA	RESERVOIR,HORIZ W/LEGS,POLY,550 GALLON	1,123.30
	Y	653	82124639	90.00	EA	RESERVOIR,PICKUP BED,POLY,210 GALLON	496.90
	Y	653	82124649	110.00	EA	RESERVOIR,PICKUP BED,POLY,325 GALLON	686.35
	Y	653	82124659	315.00	EA	UNAVAILABLE TIL FURTHER NOTICE	1,519.25
	Y	653	82124749	140.00	EA	RESERVOIR,VERTICAL,POLY,550 GALLON	831.80
	N	090	851	0.02	EA	GREASE FTG 1/8inPT,45 DEG ANGLE	1.00
	Y	540	85104	46.24	EA	KABGARD,W/STANDARD MOUNT,69in x 23.5	299.50
	Y	540	85106	9.43	EA	STBD MOUNTING KIT,STANDARD,	108.50
	N	541	85141	3.50	EA	MOUNTING KIT,BEACON,6.5in O/D,DS, FOR	36.50
	N	541	85142	3.50	EA	MOUNTING KIT,BEACON 6.5in O/D,PS, FOR	36.50
	N	541	85152	5.80	EA	MOUNTING KIT,MINI LIGHTBAR, FOR KABGARD	56.90

Buyers Products Company * 9049 Tyler Blvd. * Mentor, OH 44060 *
*** F.O.B. Mentor, Ohio * $25.00 Minimum Order**

Price List in Effect on 12/1/2016 * For ALL Items in Catalogs * Marking NEW Pricing on Items Changed Since 11/1/2016

	Y	540	85162	11.91	EA	MOUNTING KIT,CROSSBODY TOOLBOX, FOR	55.50
	N	541	85166	1.24	EA	MOUNTING KIT, SPOT/FLOOD LIGHT, (PAIR)	27.75
	Y	540	85176	1.19	EA	STBD MOUNTING KIT,TRAFFIC LIGHTBAR, FOR	26.95
	Y	540	85177	4.67	EA	MOUNTING KIT,FULL SIZE LIGHTBAR, FOR	35.99
	N	090	852	0.02	EA	GREASE FTG 1/8inPT,67 DEG ANGLE	1.00
	N	525-1	8520	0.73	EA	HDW BAG,KIT G8(4)EA HHCS1/2-13 X 2	6.30
	Y	540	85204	53.10	EA	KABGARD,W/STANDARD MOUNT KIT,71.6inx26.3	299.50
	N	525-1	8525	1.20	EA	HARDWARE,9/16X2-1/2/FLAT WASH/NUTS G8	10.00
	N	090	853	0.02	EA	GREASE FIT. 1/8inPT 90 DEGREE	1.00
	N	525-1	8530	2.80	EA	HARDWARE,3/4inX3-1/2inGR8 (PH30/PH45)	15.35
	N	859	8590195	8.60	EA	FENDER,POLY,19.5in DUAL REAR WHEELS,BLK	69.10
	N	859	8590245	14.30	EA	FENDER,POLY,FITS UP TO 24.5in DUAL REAR	79.75
	N	859	8591000	24.00	EA	FENDER MOUNTING KIT,ONE SIDE	134.90
	N	859	8591001	23.00	EA	FENDER MOUNTING KIT,ONE SIDE,STAINLESS	294.70
	N	859	8591005	2.40	EA	MOUNTING BRACKET ASSY, PAIR FOR 8591000	28.68
	N	859	8591010	8.05	EA	MOUNTING ARM W/HDW,FOR 8591000	44.70
	N	859	8591020	13.00	EA	FENDER MTG KIT,STRAIGHT,UNIVERSAL CS	59.30
	N	859	8591030	13.00	EA	*DISCONTINUED* FENDER MTG KIT,	
	N	859	8591040	7.00	EA	FENDER, PUSHER, POLY (FRONT)	137.65
	N	859	8591050	10.00	EA	FENDER, INTERMEDIATE, POLY (MIDDLE)	159.00
	N	859	8591060	11.00	EA	FENDER, INTERMEDIATE, POLY (REAR)	144.95
	N	295	8620	1.30	EA	HARDWARE KIT, PINTLE HOOK MNT BP200/	10.40
	Y	110	870272	16.75	EA	SHAFT 7/8in SQ x 6ft, +/- .125	64.90
	Y	110	871272	13.50	EA	SHAFT 7/8in HEX x 6ft	42.05
	N	888	8881200	4.90	EA	REAR OBSV SYS,7in CLR,CAM-AUDIO	359.85
	N	888	8881211	1.20	EA	CAMERA,COLOR,STANDARD,W/AUDIO,	178.64
	N	888	8881212	1.00	EA	CAMERA,COLOR,BULLET,RECESSED MOUNT	109.72
	N	888	8881214	0.58	EA	CAMERA, COLOR,SIDE,UNIVERSAL	199.34
	N	888	8881216	0.31	EA	CAMERA,COLOR,LICENSE PLATE MOUNT	178.64
	N	888	8881221	0.60	EA	CABLE,16ft, FOR REAR OBSV SYSTEM(4-PIN)	12.60
	N	888	8881222	1.00	EA	CABLE,32ft, FOR REAR OBSV SYSTEM (4-PIN)	21.60
	N	888	8881224	1.90	EA	CABLE,65ft, FOR REAR OBSV SYSTEM (4-PIN)	36.00
	N	888	8881225	2.50	EA	CABLE,82ft, FOR REAR OBSV SYSTEM (4-PIN)	48.00

Buyers Products Company * 9049 Tyler Blvd. * Mentor, OH 44060 *
*** F.O.B. Mentor, Ohio * $25.00 Minimum Order**

Price List in Effect on 12/1/2016 * For ALL Items in Catalogs * Marking NEW Pricing on Items Changed Since 11/1/2016

	N	888	8881250		EA	REAR OBSV SYS,7in CLR,LICENSE PLATE CAM	359.85
	N	888	8881260	4.20	EA	REAR OBSV SYS,7in CLR, RECESSED CAMERA	306.00
	N	888	8881270	4.90	EA	REAR OBSV SYS,7in CLR, QUAD SCREEN	496.00
	N	888	8882100	4.20	EA	REAR OBSV SYS,7in CLR,CAM-AUDIO,WIRELESS	349.99
	N	888	8882111	1.46	EA	CAMERA,WIRELESS,COLOR,AUDIO,NIGHT VISION	149.99
	N	888	8882150	4.00	EA	WASHING SYSTEM, CAMERA, UNIVERSAL	249.90
	N	888	8882200	4.50	EA	REAR OBSV SYS,7in CLR,CAM,FORD TRANSIT	359.99
	N	888	8882300	3.07	EA	REAR OBSV SYS,4.3in MIRROR MONITOR CLR	249.99
	N	889	8891001	1.40	EA	BRACKET,MOUNTING,MIRROR,BEACON,SST	49.90
	N	889	8891002	0.99	EA	GUARD,BRANCH,BEACON,BLACK	27.90
	N	889	8891004	0.60	EA	LIGHT,STROBE,4-7/8in RECT,4LED,AMBER,	47.80
	N	889	8891006	0.60	EA	LIGHT,STROBE,4-7/8in RECT,4 LED, CLEAR	55.80
	N	889	8891007	0.16	EA	BRACKET,MOUNT, ALUM,FOR 8891004/8891006/	15.90
	N	889	8891008	0.60	EA	LIGHT,STROBE,4-7/8in,RECT,RED, 4 LED,	47.80
	N	889	8891009	0.60	EA	LIGHT,STROBE,4-7/8in RECT, BLUE, 4 LED	64.80
	N	889	8891010	0.70	EA	BRACKET,MOUNTING,BLACK PWDCT,ALUM	29.90
	N	889	8891015	1.20	EA	LIGHT,STROBE,4.50in ROUND,6 LED, AMBER	88.90
	N	889	8891016	0.85	EA	LIGHT,STROBE,4in,16-LED,ROAD FLARE,	29.95
	N	889	8891018	6.42	EA	LIGHT,STROBE,4in,16-LED, ROAD FLARE,	194.90
	N	889	8891020	5.00	EA	LIGHTBAR,MINI,HALOGEN,AMBER,MAGNETIC	159.80
	N	889	8891024	1.58	EA	LIGHTBAR,DASH,12LED,12-24V,AMBER	149.90
	N	889	8891025	1.58	EA	LIGHTBAR,DASH,12 LED,12-24V,AMBER/CLEAR	149.90
	N	889	8891040	3.50	EA	LIGHTBAR,MINI,LED,12-24 VDC,AMBER,	159.80
	N	889	8891042	3.50	EA	LIGHTBAR,MINI,24-LED 12-24 VDC,AMBER/	159.80
	N	889	8891044	3.50	EA	LIGHTBAR,MINI,LED,12-24 VDC, BLUE, MAG/	159.80
	N	889	8891048	3.50	EA	LIGHTBAR,MINI,LED,12-24 VDC, GREEN, MAG/	159.80
	N	889	8891049	3.50	EA	LIGHTBAR,24 LED,12-24 VDC,AMBER/GREEN,	159.80
	N	889	8891050	4.00	EA	LIGHTBAR,MINI,LED,12VDC,AMBER,MAGNETIC	179.80
	N	889	8891052	4.00	EA	LIGHTBAR,MINI,24 LED,12VDC,AMBER/CLEAR	179.80

Buyers Products Company * 9049 Tyler Blvd. * Mentor, OH 44060 *
*** F.O.B. Mentor, Ohio * $25.00 Minimum Order**

Price List in Effect on 12/1/2016 * For ALL Items in Catalogs * Marking NEW Pricing on Items Changed Since 11/1/2016

	N	889	8891060	5.50	EA	LIGHTBAR,MINI,LED,10-30 VDC,AMBER-PERM/	275.48
	N	889	8891062	6.13	EA	LIGHTBAR,MINI,LED,12-24 VDC,AMBER/CLEAR	275.48
	N	889	8891063	6.13	EA	LIGHTBAR,MINI,LED,12-24 VDC,RED-MAG/PERM	275.48
	N	889	8891070	5.00	EA	LIGHTBAR,MINI,LED,10-30 VDC,AMBER	310.90
	N	889	8891071	4.70	EA	LIGHTBAR,MINI,LED,10-30 VDC, AMBER,	307.00
	N	889	8891080	3.10	EA	LIGHTBAR,MINI,LED,12-24VDC,AMBER	199.80
	N	889	8891082	3.10	EA	LIGHTBAR,MINI,LED,12-24VDC,AMBER/CLEAR	199.80
	N	889	8891090	7.78	EA	LIGHTBAR,MINI,LED 12 VDC,3 AMP,SAE	373.50
	N	889	8891091	1.70	EA	BRACKET,MOUNTING,BLK,FOR 8891090 LED	25.00
	N	889	8891100	9.25	EA	LIGHTBAR,MINI,LED 12-24 VDC,AMBER 3.6A	447.30
	N	889	8891102	9.25	EA	LIGHTBAR,MINI,30 LED 12-24 VDC,AMBER/	447.30
	N	889	8891104	0.60	EA	LIGHT,STROBE,4-7/8in,4-LED,AMBER,	59.80
	N	889	8891105	0.60	EA	LIGHT,STROBE,4-7/8in,4-LED,AMBER/CLEAR	65.40
	N	889	8891120	0.20	EA	LIGHT,STROBE,3-7/8in,3 LED, AMBER,	49.82
	N	889	8891121	0.20	EA	LIGHT,STROBE,3-7/8in,3 LED, CLEAR,	49.82
	N	889	8891130	0.24	EA	LIGHT,STROBE,4-3/4in,4 LED, AMBER,	59.90
	N	889	8891131	0.24	EA	LIGHT,STROBE,4-3/4in,4 LED, CLEAR,	59.90
	N	889	8891132	0.24	EA	LIGHT,STROBE,4-3/4in,4 LED,AMBER/CLEAR	59.90
	N	889	8891144	21.00	EA	LIGHT BAR,SPREADER,LED,SST,W/WIRE HARN	635.25
	N	889	8891145	26.84	EA	LIGHTBAR,SPREADER,LED,SST,MARKER & OVAL	635.25
	N	889	8891150		EA	LIGHTBAR,SPREADER,LED,SST,MARKER & OVAL	731.45
	N	889	8891166	30.00	EA	LIGHT BAR,SPREADER,LED,SST,W/WIRE HARN	776.70
	N	889	8891167	30.00	EA	LIGHT BAR,SPREADER,LED,SST,W/WIRE HARN	752.70
	N	889	8891168	36.94	EA	LIGHTBAR,SPREADER,LED,SST,MARKER & OVAL	776.70
	N	889	8891169	36.62	EA	LIGHTBAR,SPREADER,LED,SST,MARKER & OVAL	752.70
	N	889	8891177		EA	LIGHTBAR,SPREADER,LED,SST,MARKER & OVAL	776.70
	N	889	8891178		EA	LIGHTBAR,SPREADER,LED,SST,MARKER & OVAL	752.70
	N	889	8891200	0.04	EA	BRACKETS,LIGHT,STROBE,CRM SURF MNT (1PR)	14.40
	N	889	8891201	0.04	EA	BRACKETS,LIGHT,STROBE,BLK SURF MNT (1PR)	9.00
	N	889	8891215	1.25	EA	LIGHT,STROBE,LED CLEAR 15ft CBL,IN-LINE	198.90

Buyers Products Company * 9049 Tyler Blvd. * Mentor, OH 44060 *
*** F.O.B. Mentor, Ohio * $25.00 Minimum Order**

Price List in Effect on 12/1/2016 * For ALL Items in Catalogs * Marking NEW Pricing on Items Changed Since 11/1/2016

	N	889	8891216	1.25	EA	LIGHT,STROBE,LED AMBER 15ft CBL IN LINE	198.98
	N	889	8891225	1.60	EA	LIGHTS,STROBE,LED,CLEAR 25ft CABLE	218.90
	N	889	8891226	1.60	EA	LIGHTS,STROBE,LED,AMBER 25ft CABLE	218.90
	N	889	8891227	1.60	EA	LIGHTS,STROBE,6 LED,AMBER/CLEAR,25ft	234.96
	N	889	8891325	1.60	EA	LIGHTS,STROBE,LED,CLEAR 25ft CABLE	222.90
	N	889	8891326	1.60	EA	LIGHTS,STROBE,LED,AMBER 25ft CABLE	222.90
	N	889	8891327	1.60	EA	LIGHTS,STROBE,6 LED,AMBER/CLEAR,25ft	234.96
	N	889	8891400	0.16	EA	LIGHT,STROBE,3-3/8in ,3 LED, AMBER	89.75
	N	889	8891401	0.16	EA	LIGHT,STROBE,3-3/8in ,3 LED, CLEAR	89.75
	N	889	8891402	0.08	EA	BRACKET,MOUNTING,BLK PWDR COAT ALUMINUM	15.90
	N	889	8891403	0.33	EA	LIGHT,STROBE,2-9/16in ,3 LED, AMBER	103.50
	N	889	8891404	0.33	EA	LIGHT,STROBE,2-9/16in ,3 LED, CLEAR	103.50
	N	889	8891405	0.04	EA	GROMMET,BLACK,3-3/8in, LIGHT RECESSED	17.30
	N	889	8891500	0.25	EA	LIGHT,STROBE,5in, 6 LED, AMBER,12-24 VDC	117.40
	N	889	8891501	0.25	EA	LIGHT,STROBE,5in, 6 LED, CLEAR,12-24 VDC	117.40
	N	889	8891502	0.25	EA	LIGHT,STROBE,5in, 6 LED, AMBER/CLEAR	117.40
	N	889	8891505	0.25	EA	GROMMET,BLACK,5in,RECESSED MOUNT	17.80
	N	889	8891506	0.16	EA	BRACKET,MOUNTING,BLACK POWDER COATED	17.20
	N	889	8891600	0.42	EA	LIGHT,STROBE,5in,AMBER, 12 LED,10-30,VDC	78.50
	N	889	8891601	0.42	EA	LIGHT,STROBE,5in,CLEAR, 12 LED,10-30,VDC	78.50
	N	889	8891602	0.42	EA	LIGHT,STROBE,5in,1/2 AMBER, 1/2 CLEAR,	78.50
	N	889	8891605	0.16	EA	BRACKET,MOUNT, ALUM,FOR 8891600/1/2	15.90
	N	889	8891700	0.42	EA	LIGHT,STROBE,5in,12 LED, AMBER,12-24 VDC	147.80
	N	889	8891701	0.42	EA	LIGHT,STROBE,5in,12 LED, CLEAR,12-24 VDC	147.80
	N	889	8891702	0.42	EA	LIGHT,STROBE,5in,12 LED, AMBER/CLEAR	147.80
	N	889	8891703	0.42	EA	LIGHT,STROBE,5in,12 LED,RED,12-24 VDC	147.80
	N	889	8891704	0.42	EA	LIGHT,STROBE,5in,12 LED,BLUE,12-24 VDC	147.80
	N	889	8891705	0.12	EA	GROMMET,BLACK,5in,RECESSED MOUNT	17.80
	N	889	8891706	0.70	EA	BRACKET,MOUNTING,BLACK PWD CT,ALUM	18.50
	N	889	8891707	0.42	EA	LIGHT,STROBE,5in,12 LED,RED/BLUE,12-24	147.80

Buyers Products Company * 9049 Tyler Blvd. * Mentor, OH 44060 *
*** F.O.B. Mentor, Ohio * $25.00 Minimum Order**

Price List in Effect on 12/1/2016 * For ALL Items in Catalogs * Marking NEW Pricing on Items Changed Since 11/1/2016

	N	889	8891709	0.42	EA	LIGHT,STROBE,5in12 LED,AMBER/GREEN	147.80
	N	889	8891800	0.65	EA	LIGHT,STROBE,2.85in,4 LED,AMBER,12-24V,	71.90
	N	889	8891801	0.65	EA	LIGHT,STROBE,2.85in,4 LED,CLEAR,12-24V,	71.90
	N	889	8891802	0.65	EA	LIGHT,STROBE,2.85in,4 LED,1/2 AMBER,1/2	71.90
	N	889	8891803	0.65	EA	LIGHT,STROBE,2.85in,4 LED,RED,12-24V,	71.90
	N	889	8891804	0.65	EA	LIGHT,STROBE,2.85in,4 LED,BLUE,12-24V,	71.90
	N	889	8891900	0.09	EA	LIGHT,STROBE,4-3/8in,6-LED,AMBER	106.90
	N	889	8891901	0.09	EA	LIGHT,STROBE,4-3/8in,6-LED,CLEAR	106.90
	N	889	8891902	0.09	EA	LIGHT,STROBE,4-3/8in,6-LED,AMBER/CLEAR	106.90
	N	889	8891903	0.09	EA	LIGHT,STROBE,4-3/8in,6-LED,RED	106.90
	N	889	8891904	0.09	EA	LIGHT,STROBE,4-3/8in,6-LED,BLUE	106.90
	N	889	8891910	0.09	EA	LIGHT,STROBE,4-3/8in,6-LED,AMBER	106.90
	N	889	8891911	0.12	EA	LIGHT,STROBE,4-3/8in,6-LED,CLEAR	106.90
	N	889	8891912	0.09	EA	LIGHT,STROBE,4-3/8in,6-LED,AMBER/CLEAR	106.90
	N	889	8891913	0.09	EA	LIGHT,STROBE,4-3/8in,6-LED,RED	106.90
	N	889	8891914	0.09	EA	LIGHT,STROBE,4-3/8in,6-LED,BLUE	106.90
	N	889	8891920	0.02	EA	BEZEL,CHROME,FOR 1900 SERIES STROBES	9.00
	N	889	8891921	0.03	EA	BEZEL, WHITE, FOR 1900 SERIES	9.00
	N	889	8891925	0.06	EA	BRACKET,MOUNTING,ALUMINUM,BLACK	17.20
	N	889	8892000	2.30	EA	LIGHTS,STROBE/MARKER,45 LED AMBER/AMBER	248.90
	N	889	8892001	2.30	EA	LIGHTS,STROBE/MARKER,45 LED AMBER/CLEAR	248.90
	N	889	8892002	2.30	EA	LIGHTS,STROBE/MARKER,45 LED AMBER/SMOKE	248.90
	N	889	8892200	0.12	EA	LIGHT,STROBE,5-1/8in,6-LED,AMBER	69.60
	N	889	8892201	0.12	EA	LIGHT,STROBE,5-1/8in,6-LED,CLEAR	69.60
	N	889	8892202	0.12	EA	LIGHT,STROBE,5-1/8in,6-LED,AMBER/CLEAR	69.60
	N	889	8892203	0.12	EA	LIGHT,STROBE,5-1/8in,6-LED,RED	69.60
	N	889	8892204	0.12	EA	LIGHT,STROBE,5-1/8in,6-LED,BLUE	69.60
	N	889	8892205	0.12	EA	LIGHT,STROBE,5-1/8in,6-LED,RED/BLUE	69.60
	N	889	8892206	0.12	EA	LIGHT,STROBE,5-1/8in 6-LED,RED/AMBER	69.60
	N	889	8892207	0.12	EA	LIGHT,STROBE,5-1/8in 6-LED,RED/CLEAR	69.60
	N	889	8892208	0.12	EA	LIGHT,STROBE,5-1/8in 6-LED,AMBER/BLUE	69.60
	N	889	8892209	0.12	EA	LIGHT,STROBE,5-1/8in 6-LED,GREEN	69.60
	N	889	8892210	0.12	EA	LIGHT,STROBE,5-1/8in 6-LED,AMBER/GREEN	69.60
	N	889	8892225	0.07	EA	BRACKET,MOUNTING,ALUMINUM,BLACK	17.20

Buyers Products Company * 9049 Tyler Blvd. * Mentor, OH 44060 *
*** F.O.B. Mentor, Ohio * $25.00 Minimum Order**

Price List in Effect on 12/1/2016 * For ALL Items in Catalogs * Marking NEW Pricing on Items Changed Since 11/1/2016

	N	889	8892230	0.08	EA	LIGHT,STROBE,3-1/2in,3-LED,AMBER, 12-24	46.90
	N	889	8892231	0.08	EA	LIGHT,STROBE,3-1/2in,3-LED,CLEAR, 12-24	46.90
	N	889	8892233	0.08	EA	LIGHT,STROBE,3-1/2in,3-LED,RED, 12-24	46.90
	N	889	8892234	0.08	EA	LIGHT,STROBE,3-1/2in,3-LED,BLUE, 12-24	46.90
	N	889	8892239	0.08	EA	LIGHT,STROBE,3-1/2in,3-LED,GREEN, 12-24	46.90
	N	889	8892240	0.10	EA	LIGHT,STROBE,4-3/8in,4-LED,AMBER, 12-24	54.50
	N	889	8892241	0.10	EA	LIGHT,STROBE,4-3/8in,4-LED,CLEAR, 12-24	54.50
	N	889	8892242	0.10	EA	LIGHT,STROBE,4-3/8in,4-LED,AMBER/CLEAR,	54.50
	N	889	8892243	0.10	EA	LIGHT,STROBE,4-3/8in,4-LED,RED,	54.50
	N	889	8892244	0.10	EA	LIGHT,STROBE,4-3/8in,4-LED,BLUE,	54.50
	N	889	8892245	0.10	EA	LIGHT,STROBE,4-3/8in,4-LED,RED/BLUE,	54.50
	N	889	8892246	0.10	EA	LIGHT,STROBE,4-3/8in,4-LED,RED/AMBER,	54.50
	N	889	8892247	0.10	EA	LIGHT,STROBE,4-3/8in,4-LED,RED/CLEAR,	54.50
	N	889	8892248	0.10	EA	LIGHT,STROBE,4-3/8in,4-LED,AMBER/BLUE,	54.50
	N	889	8892249	0.10	EA	LIGHT,STROBE,4-3/8in,4-LED,GREEN,	54.50
	N	889	8892250	0.10	EA	LIGHT,STROBE,4-3/8in,4-LED,AMBER/GREEN,	54.50
	N	889	8892300	0.11	EA	LIGHT,STROBE,3-3/8in,3-LED,AMBER	85.00
	N	889	8892301	0.11	EA	LIGHT,STROBE,3-3/8in,3-LED,CLEAR	85.00
	N	889	8892303	0.11	EA	LIGHT,STROBE,3-3/8in,3-LED,RED	85.00
	N	889	8892304	0.11	EA	LIGHT,STROBE,3-3/8in,3-LED,BLUE	85.00
	N	889	8892320	0.11	EA	BEZEL,CHROME,FOR 2300 SERIES STROBES	8.70
	N	889	8892321	0.11	EA	BEZEL,WHITE,FOR 2300 SERIES STROBES	8.70
	N	889	8892325	0.04	EA	BRACKET,MOUNTING,ALUMINUM,BLACK	15.90
	N	889	8892400	0.10	EA	LIGHT,STROBE,1in,3-LED,AMBER 12-24 VDC	67.00
	N	889	8892401	0.10	EA	LIGHT,STROBE,1in,3-LED,CLEAR 12-24 VDC	67.00
	N	889	8892403	0.10	EA	LIGHT,STROBE,1in,3-LED,RED 12-24 VDC	67.00
	N	889	8892404	0.10	EA	LIGHT,STROBE,1in,3-LED,BLUE 12-24 VDC	67.00
	N	889	8892420	0.10	EA	BEZEL,CHROME,FOR2400 SERIES STROBES	9.98
	N	889	8892425	0.05	EA	BRACKET,MOUNTING,ALUMINUM,BLACK	16.50
	N	889	8892500	0.09	EA	LIGHT,STROBE,2-1/4in,6-LED,AMBER,12-24	41.00
	N	889	8892501	0.09	EA	LIGHT,STROBE,2-1/4in,6-LED,CLEAR,12-24	41.00
	N	889	8892600	0.21	EA	LIGHT,STROBE,4-1/2in,12-LED,AMBER,	139.90

Buyers Products Company * 9049 Tyler Blvd. * Mentor, OH 44060 *
*** F.O.B. Mentor, Ohio * $25.00 Minimum Order**

Price List in Effect on 12/1/2016 * For ALL Items in Catalogs * Marking NEW Pricing on Items Changed Since 11/1/2016

	N	889	8892601	0.21	EA	LIGHT,STROBE,4-1/2in,12-LED,CLEAR,	139.90
	N	889	8892602	0.21	EA	LIGHT,STROBE,4-1/2in,12-LED,AMBER/CLEAR,	139.90
	N	889	8892700	0.29	EA	LIGHT,STROBE,5in,3-LED,AMBER,12-24 VDC	84.00
	N	889	8892701	0.29	EA	LIGHT,STROBE,5in,3-LED,CLEAR,12-24 VDC	84.00
	N	889	8892703	0.29	EA	LIGHT,STROBE,5in,3-LED,RED,12-24 VDC	84.00
	N	889	8892704	0.29	EA	LIGHT,STROBE,5in,3-LED,BLUE,12-24 VDC	84.00
	N	889	8892709	0.29	EA	LIGHT,STROBE,5in,3-LED,GREEN,12-24 VDC	84.00
	N	889	8893024	15.40	EA	LIGHTBAR,24in,LED,12V,AMBER ,	798.90
	N	889	88930243	15.40	EA	LIGHTBAR,24in,LED,12V,AMBER/CLEAR	798.90
	N	889	8893049	33.00	EA	LIGHTBAR,49in,LED,12V,AMBER,	1,599.50
	N	889	88930492	31.00	EA	LIGHTBAR,49in,LED,12V,AMBER,	1,099.00
	N	889	88930493	31.00	EA	LIGHTBAR,49in,LED,12V,AMBER/CLEAR,	1,099.00
	N	889	8893060	36.10	EA	LIGHTBAR,60in,LED,12V,AMBER	1,863.50
	N	889	88930603	34.90	EA	LIGHTBAR,60in,LED,12V,AMBER	1,445.90
	N	889	88930604	35.60	EA	LIGHTBAR,60in,LED,12V,AMBER	1,323.50
	N	889	88930605	35.90	EA	LIGHTBAR,60in,LED,12V,AMBER	1,469.75
	N	889	8894037	6.60	EA	LIGHTBAR,37in,24LED,12-24V,AMBER	519.75
	N	889	8894047	7.50	EA	LIGHTBAR,47in,32LED,12-24V,AMBER	599.70
	N	889	8894050	0.50	EA	BRACKETS,MTG,STL,BLACK PC	15.70
	N	889	8895095	7.25	EA	MOUNT,LIGHTBAR,CAB & CHASSIS,1500-3500	259.00
	N	889	8895100	7.25	EA	MOUNT, LIGHTBAR, 1500-3500, CHEVY/GMC,	259.00
	N	889	8895105	7.25	EA	MOUNT, LIGHTBAR, COLORADO/CANYON	259.00
	N	889	8895110	7.25	EA	MOUNT, LIGHTBAR, COLORADO/CANYON	299.00
	N	889	8895150	7.25	EA	MOUNT, LIGHTBAR, F150, FORD 2015+	259.00
	N	889	8895250	7.25	EA	MOUNT, LIGHTBAR, F250-F550,FORD,2006-16	259.00
	N	889	8895300	7.25	EA	MOUNT, LIGHTBAR, RAM/DODGE, 2010-2016	259.00
	N	889	8895350	7.25	EA	MOUNT, LIGHTBAR, CAB CHASSIS,RAM/DODGE.	259.00
	N	510	88CH510	0.13	EA	CYLINDER LCK W/(2)CH510, ALT FOR L8816	5.00
	N	510	88CH545	0.12	EA	CYLINDER & CH545 KEY FOR L8815/L8915	5.85
	N	090	900	0.03	EA	GREASE FIT. 1/4in PT STRAIGHT	1.10
	N	549	901BP	0.72	EA	PLATE,BACK SUPPORT,ZN PLATED	6.70
	N	903-1	9031100	28.00	EA	BOX,POLY,SALT,36in W x 24in D x 30in T,	198.90
	N	903-1	9031105	21.00	EA	BOX,POLY,SALT,36in W x 24in D x 20in T,	198.90
	N	903-1	9031110	2.47	EA	SCOOP, SALT, BLACK PE	17.90
	N	510	90M	0.49	EA	LATCH,BOLT,FINGER PULL,ZN	6.25

Buyers Products Company * 9049 Tyler Blvd. * Mentor, OH 44060 *
*** F.O.B. Mentor, Ohio * $25.00 Minimum Order**

Price List in Effect on 12/1/2016 * For ALL Items in Catalogs * Marking NEW Pricing on Items Changed Since 11/1/2016

	N	360	9225	0.04	PC	S-HOOK,2.5in,100 PCS/BAG	0.40
	N	990	9901000	5.60	EA	GLOVES,WORK, CASE (10 pr ea XL & XXL)w/	259.60
	N	990	9901005	0.23	EA	GLOVES,WORK,BLK, LG PR,INCREMENTS OF 10	14.99
	N	990	9901010	0.23	EA	GLOVES,WORK,BLK, X-LG PR,INCREMENTS OF10	14.99
	N	990	9901015	0.24	EA	GLOVES,WORK,BLK,XXL PR,INCREMENTS OF10	14.99
	N	990	9901100	0.13	EA	HAT,KNIT,BLACK,DOGG LOGO,BAGGED	4.95
	N	992	9921000	0.45	EA	VEST,SAFETY,FL LIME,MEDIUM,CLASS II	10.49
	N	992	9921005	0.50	EA	VEST,SAFETY,FL LIME,LARGE,CLASS II	10.49
	N	992	9921010	0.55	EA	VEST,SAFETY,FL LIME,XLARGE,CLASS II	10.49
	N	992	9921015	0.60	EA	stbd VEST,SAFETY,FL LIME, XXLARGE,	10.49
	N	490	A23	1.25	EA	HINGE,CONT ALUM,2inX72in	18.35
	N	490	A29	1.50	EA	HINGE,CONT ALUM,2inX72in	21.85
	N	490	A34	1.75	EA	HINGE,CONT ALUM,2inX72in	34.10
	N	490	A36	2.31	EA	HINGE,CONT ALUM,3inX72in	44.30
	N	490	A41	4.13	EA	HINGE,CONT ALUM,3inX72in	69.70
	N	490	A42	6.75	EA	HINGE,CONT ALUM,4inX72in	80.80
	N	220	AC010	12.00	EA	CONSOLE,AIR PTO/AIR HOIST,	71.80
	N	220	AC010B	13.58	EA	CONSOLE,TALL UNPUNCHED TOP	71.80
	N	220	AC010M	12.00	EA	CONSOLE,AIR PTO/AIR HOIST	71.80
	N	220	ACC01	0.50	EA	CONSOLE,ACCESSORY PLATE KIT	14.30
	N	494	AFSSP080	0.09	EA	HINGE,WELD-ON,ALUMINUM W/SST	5.68
	N	494	AFSSP100	0.18	EA	HINGE,WELD-ON,ALUMINUM,W/SST	7.90
	N	646	AS1	1.00	EA	CYLINDER,AIR SHIFT,DIR CONT V	122.40
	N	646	AS301	1.67	EA	CYLINDER, AIR SHIFT,C101/102,C1010	108.00
	N	646	AS302	2.71	EA	CYLINDER, AIR SHIFT W/TUBING &	125.06
	N	523	AST460	4.50	EA	TAPE,ANTI SKID,SELF ADHESIVE,4inX60ft	74.50
	N	523	AST60	3.00	EA	TAPE,ANTI SKID,SELF ADHESIVE,2inX60ft	34.90
	N	523	AST624	13.00	BX	TAPE,ANTI SKID,SELF ADHESIVE,6X24in50/BX	205.80
	N	523	AST660	7.50	EA	TAPE,ANTI SKID,SELF ADHESIVE,6inX60ft	104.40
	N	537	ATVS100	19.00	EA	SPREADER,FEEDER ATV 100 LBS	257.75
	N	537	ATVS15A	39.00	EA	SPREADER, ATV 15 GALLON	455.10
	N	547	B03822SC	3.77	EA	SAFETY CHAIN,3/8inX22in W/FORGED	11.52
	N	547	B03835SC	5.00	EA	SAFETY CHAIN,3/8inX35in W/FORGED	12.48
	N	524	B0681	9.80	EA	SHACKLE,W/FORGED BRACKET WLL 18,000#	70.83
	N	528	B076A	4.00	EA	HOOK,10 TON TOW,BLACK,WLL 20,000#	30.60
	Y	320	B08462	0.01	BG	MOUNT,ADHESIVE,1in SQ, 100/BAG	19.40
	N	370	B1001	0.18	EA	BUMPER,RUBBER STOP,2.5inOD X 1in	1.70
	Y	780	B1018LSP	3.25	PR	MUD FLAP, PLAIN, 10inW X 18inL	19.60
	Y	840	B1018PPB	1.30	PR	MUD FLAP,PLASTIC,10 x 18 x .150,	12.23

Buyers Products Company * 9049 Tyler Blvd. * Mentor, OH 44060 *
*** F.O.B. Mentor, Ohio * $25.00 Minimum Order**

Price List in Effect on 12/1/2016 * For ALL Items in Catalogs * Marking NEW Pricing on Items Changed Since 11/1/2016

	Y	840	B1020PPB	1.41	PR	MUD FLAP,PLASTIC,10x20 x .150, UTILITY	12.28
	N	370	B1025	0.18	EA	STBD BUMPER,RUBBER STOP 2.5inOD X 1in	2.50
	Y	840	B117518PPB	1.55	PR	MUD FLAP,PLASTIC,11.75x17.75x .150,BLK	12.10
	Y	780	B1218LSP	4.50	PR	MUD FLAP, PLAIN, 12inW X 18inL	21.35
	Y	840	B1237PPB	2.80	PR	FENDER FLAIR-MUD FLAP, 12x37x .150	21.37
	Y	840	B1237PPW	2.50	PR	FENDER FLAIR-MUD FLAP, 12x37x .150	25.63
	Y	780	B1412LSP	3.50	PR	MUD FLAP,PLAIN	19.60
***	N	543	B16137	10.09	EA	EYE 3inID, 7 TON CAPACITY	35.98
	N	527	B16137BK	11.00	EA	EYE,3inID,7 TON CAPACITY,POWDER	41.84
	N	543	B16137Z	10.00	EA	DRAWBAR,EYE ONLY,3inID,7TON,CAP	43.10
	N	543	B16140	12.00	EA	EYE, ADJ. DRAWBAR,10 TON,3in ID	48.85
	N	543	B16140Z	12.30	EA	EYE, ADJ. DRAWBAR,10 TON,3in ID CLR ZINC	59.00
	N	543	B18128	16.30	EA	DRAWBAR,KIT, ADJ, 3inID,6 TON,W/3 POS	55.15
	Y	780	B1812LSP	4.00	PR	MUD FLAP,PLAIN,1/4in, 18inWX12inL	21.35
	N	543	B18135	19.25	EA	DRAWBAR,KIT, ADJ, 3inID,6 TON,W/5 POS	73.30
	Y	780	B1820LSP	7.63	PR	MUD FLAP,PLAIN,1/4in,18inWX20inL	27.22
	N	549	B20	0.12	EA	D-RING,.25inWIRE,W/BRKT,ZNC PLT WLL 800#	1.60
	N	543	B20135	24.50	EA	DRAWBAR,ADJ,HEAVY DUTY 3inID,6 TON,W/5	73.30
	N	543	B20143	21.50	EA	DRAWBAR, ADJ 10 TON, 3in ID,w/3 POSITION	86.70
	N	543	B20145	25.50	EA	DRAWBAR, ADJ 10 TON, 3in w/ 5 POSITION	109.70
	Y	780	B2014LSP	6.00	PR	MUD FLAP,PLAIN,1/4in,20inWX14inL	26.78
	Y	780	B2018LSP	7.00	PR	MUD FLAP PLAIN 1/4in 20inWX18inL	26.73
	Y	780	B2020LSP	8.00	PR	MUD FLAP,PLAIN 1/4in,20inX20in	32.03
	Y	780	B2024LSP	9.00	PR	MUD FLAP,PLAIN,1/4in,20inW X24inL	33.34
	Y	780	B2030LSP	13.38	PR	MUD FLAP, PLAIN, 20inW X 30inL	48.74
	N	240	B206301	2.95	EA	CONTROL,SINGLE AXIS REMOTE	55.20
	N	240	B206301001	2.50	EA	CONTROL,REMOTE V,SGL AXIS,CTR	69.90
	N	240	B206301002	2.50	EA	CONTROL,REMOTE V,SGL AXIS,END	69.90
	N	240	B206301RO	0.40	EA	RUBBER BOOT COVER FOR B206301	9.00
	N	240	B206305	4.44	EA	CONTROL,REMOTE V,DUAL AXIS	104.00
	N	240	B206401	1.06	EA	CONTROL,REMOTE,NON-LKG,COMPOSITE,	63.75
	N	240	B206401001	1.20	EA	CONTROL,REMOTE,CTR LKG,COMPOSITE	71.35
	N	549	B21	0.15	EA	D-RING,1/4in W/CLIP,BLACK ZINC WLL 800#	1.90
	N	889	B210880	6.71	EA	BRACKET, SELF LEVELING	66.30
	Y	020	B21333	3.00	EA	1310 FLANGE COMPANION,1-1/4in	26.55
	N	513	B2159C	6.16	EA	DOOR LOCK,CAM ACTION, CAST	23.68
	Y	760	B2162E	0.98	EA	TIE BAR,3-3/4in CTR TO CTR	5.85
	Y	760	B2162FF	0.91	EA	TIE BAR, FORGED 4.25inC-C	5.00
	Y	760	B2162H	1.24	EA	TIE BAR,4-1/2in CTR TO CTR	5.85
	Y	760	B2162N	1.06	EA	TIE BAR,4-1/4in CTR TO CTR	5.85

Buyers Products Company * 9049 Tyler Blvd. * Mentor, OH 44060 *
*** F.O.B. Mentor, Ohio * $25.00 Minimum Order**

Price List in Effect on 12/1/2016 * For ALL Items in Catalogs * Marking NEW Pricing on Items Changed Since 11/1/2016

	Y	020	B22329	1.50	EA	1310 FLANGE YOKE,3-1/8inBOLT	21.40
	Y	020	B22479	1.41	EA	1310 FLANGE YOKE,3-3/4in BOLT	22.95
	Y	020	B228357TY	9.50	EA	YOKE AND TUBE	67.60
	N	549	B23	0.12	EA	D-RING,1.5X1.25X.22 W/CLIP ZNC WLL 400#	1.60
	Y	020	B23128KX	2.32	EA	1310 SLIP YOKE,1-3/8in-16 SPLN,W/THD CAP	34.20
	Y	020	B23130	1.91	EA	1310 SLIP YOKE, 1-1/8in10 SPLINE	33.40
	N	520	B2344	0.40	EA	HANDLE,CHEST,.055 CRS PLATE ZINC,BAGGED	2.60
	N	520	B23505	7.00	EA	OUTRIGGER,7in REMOVABLE	34.95
	N	520	B23505LH	3.82	EA	BRACKET,LH REMOVABLE OUTRIGGER	16.20
	N	520	B23505RH	3.82	EA	BRACKET,RH REMOVABLE OUTRIGGER	16.20
	N	520	B23510	9.80	EA	OUTRIGGER,LOWBED,CASTING ONLY	50.95
	N	520	B2351001	0.75	EA	OUTRIGGER,WELD BRACKET-FLANGE	7.80
	N	520	B2351002	1.70	EA	OUTRIGGER,WELD BRACKET-BEAM	11.60
	N	520	B23515	19.40	EA	OUTRIGGER ASSEMBLY,FORGED,	70.65
	N	515	B2373C	1.90	EA	STAKE POCKET,STR,WELD-ON,4in	5.55
	N	515	B2373G	0.70	EA	POCKET,STAKE,STR,BOLT ON,2-1/2	3.50
	N	515	B2373J	1.29	EA	STAKE POCKET,3 X 1.5	4.25
	N	515	B2373K	1.67	EA	STAKE POCKET,STR,WELD-ON,4in	5.80
	N	515	B2373R	1.30	EA	STAKE POCKET,3.5 X 1.5	5.10
	N	515	B2373W	0.48	EA	STAKE POCKET,STR,WELD-ON,2-1/2	3.85
	N	515	B2374G	0.70	EA	STAKE POCKET,TAPERED,BOLT-ON,	3.65
	N	520	B2374GZ	0.70	EA	STAKE POCKET,BOLT ON,TAPERED	4.08
	N	513	B2392L	0.63	EA	HANDLE,DOOR,inTin,CHROME,LOCKING	9.25
	N	513	B2394L	0.50	EA	HANDLE,DOOR,CHROME,LOCKING	10.45
	N	516	B239911P	0.60	EA	HANDLE,GRAB,POLY COATED STEEL, 11in	4.74
	N	516	B239914AL	0.45	EA	HANDLE,GRAB,SOLID ALUM,RD,1/2inX13in LG	5.90
	N	516	B239916AL	0.55	EA	HANDLE,GRAB,FLAT ALUMINUM,1/2inX16-1/2in	7.95
	N	516	B239918AL	0.50	EA	HANDLE,GRAB,5/8in,ROUND ALUMINUM,18in LG	7.25
	N	516	B239918C	0.75	EA	HANDLE,GRAB,SOLID STL,1/2inx13-1/4in,CRM	5.25
	N	516	B239920C	1.00	EA	HANDLE,GRAB,SOLID STEEL,1/2in x 16in CRM	6.45
	N	516	B239936C		EA	HANDLE,GRAB,SOLID STL,5/8inX41-3/4in	26.50
	N	516	B2399A	1.00	EA	HANDLE,GRAB,FORGED,5/8inDIAx9-1/2,PLAIN	7.80
	N	516	B2399B	1.13	EA	HANDLE,GRAB,FORGED,5/8inDIAx11-1/2in PL	8.80
	N	516	B2399B2C	0.75	EA	HANDLE,GRAB,DIE CAST,CHROME PLT 8-1/4in	9.00
	N	516	B2399B6C	0.37	EA	HANDLE,GRAB,DIE CAST,CHROME PLT 6in	5.00
	N	516	B2399BC	0.29	EA	HANDLE,GRAB,TUBULAR,5/8 DIA X11-1/2in,	6.60
	N	516	B2399C	1.28	EA	HANDLE,GRAB,FORGED,5/8inDIAx13-1/2 PL	8.90

Buyers Products Company * 9049 Tyler Blvd. * Mentor, OH 44060 *
*** F.O.B. Mentor, Ohio * $25.00 Minimum Order**

Price List in Effect on 12/1/2016 * For ALL Items in Catalogs * Marking NEW Pricing on Items Changed Since 11/1/2016

	N	516	B2399D	1.44	EA	HANDLE,GRAB,FORGED,5/8in DIAx15-3/8 PL	9.40
	N	516	B2399W	0.79	EA	HANDLE,GRAB,FORGED,WELD ON,NO HOLES	4.15
	N	513	B239CZ	0.08	EA	CAM,SINGLE POINT,ZINC DIE CAST,W/SET SCR	2.45
	N	549	B23SS	0.13	EA	D-RING,STAINLESS STL W/SST CLIP WLL 400#	3.80
	Y	020	B2401031	2.25	EA	1310 STUB SHAFT,1-3/8in 16 SPLN	33.40
	N	520	B2402AL	0.15	EA	CHAIN LOOP,ALUMINUM	5.65
	N	700	B2408W	0.44	EA	HOOK,GRAB,5/16in,WELD ON,3900#,FORGED	4.15
	N	700	B2408W375	0.87	EA	HOOK,GRAB,3/8in,WELD ON,5400#WLL,FORGED	5.70
	N	700	B2408W50	1.72	EA	HOOK,GRAB,1/2in,WELD ON,9200#WLL,FORGED	8.95
	N	710	B2409C	0.75	EA	CLEVIS,DOUBLE LINK,3/8in,WLL 5,400#,ZINC	8.75
	N	700	B2409W375	1.00	EA	HOOK,GRAB 3/8in,WELD-ON,6,600#,GRADE	6.10
	N	700	B2409W625	2.50	EA	*DISCONTINUED* HOOK,GRAB 5/8in,WELD-ON,	
	Y	020	B241103	1.76	EA	1310 END YOKE,1-1/4inRD,NO KWY	27.98
	Y	780	B2412LSP	5.02	PR	MUD FLAP PLAIN 1/4in 24inWX12inL	27.22
	Y	780	B2414LSP	7.00	PR	MUD FLAP,PLAIN,1/4in,24inW X14inL	30.10
	Y	780	B2418LSP	8.00	PR	MUD FLAP,PLAIN,1/4in,24inWX18inL	32.03
	Y	780	B2420LSP	9.00	PR	MUD FLAP,1/4inX24inW X 20inLONG	33.34
	N	486	B2423F	2.50	EA	HINGE,LEAF,8in STRAP,ZINC	14.20
	N	486	B2423G	4.00	EA	HINGE,LEAF,12in STRAP,ZINC	22.00
	N	486	B2423H	4.58	EA	HINGE,LEAF,16inSTRAP ZINC	24.80
	N	486	B2424SS	0.25	EA	HINGE,POLISHED STAINLESS,	7.90
	Y	842	B2424YC	7.00	PR	MUD FLAP, PLASTIC,CAUTION WIDE TURNS,	36.78
	N	486	B2426E	1.33	EA	HINGE BUTT,FORGED,W/PIN	10.70
	N	486	B2426FS	2.22	EA	HINGE,FORMED STRAP W/3.25in LEAF/GRS FTG	10.90
	N	486	B2426FSLL	2.62	EA	HINGE,FORMED STRAP W/5.25in LEAF	11.15
	N	486	B2426FSNB	2.22	EA	HINGE,FORMED STR STRAP W/GRS FTG,NO BEND	11.70
	N	486	B2426SSCL	0.71	EA	HINGE,LEFT FLUSH CAST,SST,	22.75
	N	486	B2426SSCR	0.71	EA	HINGE,RIGHT FLUSH CAST,SST,	22.75
	N	486	B2429X	1.24	EA	HINGE STRAP,FORGED,4-3/8inLONG	8.40
	N	486	B2430W	4.60	EA	HINGE STRAP,FORGED,24inLONG	27.60
	Y	842	B2430YC	8.31	PR	MUD FLAP, PLASTIC,CAUTION WIDE TURNS,	45.95
	Y	020	B2432	2.40	EA	1310 END YOKE,1-1/8in HEX	25.50
	Y	020	B243331	2.00	EA	1310 END YOKE,7/8in-13 SPLINE	25.50
	N	859	B2436ASBC	5.70	PR	BRACKET,ANTI-SAIL CHROME,(5pr/cs)	31.65
	Y	842	B2436YC	10.00	PR	MUD FLAP, PLASTIC,CAUTION WIDE TURNS,	45.85
	Y	020	B24473	1.80	EA	1310 END YOKE,1inRD,1/4inKWY	25.50
	N	700	B2447BZ	0.13	EA	HOOK,TARP,3-1/4inLG,2 HOLES,ZN	1.15
	N	700	B2447NHP	0.14	EA	HOOK,TARP,3-1/4in,WELD ON,PLAIN	1.15

Buyers Products Company * 9049 Tyler Blvd. * Mentor, OH 44060 *
*** F.O.B. Mentor, Ohio * $25.00 Minimum Order**

Price List in Effect on 12/1/2016 * For ALL Items in Catalogs * Marking NEW Pricing on Items Changed Since 11/1/2016

	N	700	B2447WAL	0.13	EA	HOOK,TARP,WELD-ON,3-1/4inLG,AL	3.15
***	N	700	B2448		EA	HOOK BINDING, 5in, WELD-ON,PLAIN FINISH	4.17
	N	700	B2448C	0.29	EA	HOOK,BINDINGS,5in LONG	4.17
	Y	020	B24503	1.66	EA	1310 END YOKE,1-1/8inRD,1/4in KWY	25.50
	Y	020	B24533	1.73	EA	1310 END YOKE,1-1/4inRD,5/16in KWY	25.50
	Y	020	B24573	1.73	EA	1310 END YOKE,1-1/4inRD,1/4inKWY	39.80
	Y	020	B248031	8.31	EA	1310 SOLID SPLINED SHAFT,1-3/8	71.80
	N	520	B2485AA	4.52	EA	CORNER IRON,FORGED1.5inX12inX12in	18.80
	N	520	B2487B	2.70	EA	CORNER IRON,FORGED,6inx8inx1.5in	14.80
	Y	780	B24LP	11.00	PR	MUD FLAP PLAIN,1/4in,24inWX24inL	43.80
	Y	810	B24LXP	16.00	PR	MUD FLAP 3/8in EX. HD PLAIN	53.45
	Y	833	B24PSRPB	11.00	PR	MUD FLAP, PLASTIC, PLAIN,	42.30
	Y	833	B24PSRPW	11.00	PR	MUD FLAP, PLASTIC, PLAIN,	48.00
	Y	820	B24SPP	21.00	PR	MUD FLAP 1/2in PLAIN STA-PUT, 24WX24L	61.33
	Y	800	B24SRP	19.00	PR	MUD FLAP 1/2in PLAIN SPRAY	62.68
	N	510	B2575	0.82	EA	SNAP LOCK,1/2in PIN,SPRING LOAD MTG PLT	7.00
	N	526	B2585B	2.00	ST	STAKE RACK, STR, CONNECTOR SET	10.84
	N	526	B2585BZ	2.03	ST	STAKE RACK, STR CONN SET, ZN PLD	11.63
	N	520	B2586	0.81	EA	SNAP LOCK,1/2inSQ PIN,ZINC	7.25
	N	526	B2588B	1.50	ST	LATCH, SECURITY, STR SIDE, PLAIN	7.67
	N	526	B2588BZ	1.50	ST	LATCH, SECURITY, STR SIDE, ZN	9.11
	N	526	B2588W	1.50	EA	LATCH,SECURITY,STR SIDE,WELD-	7.67
	N	526	B2589B	1.50	ST	LATCH, SECURITY, CORNER, PLAIN	7.67
	N	526	B2589BZ	1.50	ST	LATCH, SECURITY, CORNER, ZINC	9.11
	N	526	B2589W	1.50	EA	LATCH,SECURITY,CORNER,WELD-ON,	7.67
	N	510	B2590KZ	0.40	EA	PLATE,SIDE 90 DEGREE B2590 LATCH,ZN PLT	4.45
	N	510	B2590LH	0.81	EA	LATCH,STAKE BODY SPRING,LEFT HAND	11.32
	N	510	B2590RH	0.81	EA	LATCH,STAKE BODY SPRING,RIGHT HAND	11.32
	N	526	B2591B	2.00	ST	STAKE RACK, CORNER, CONN SET	11.63
	N	526	B2591BZ	2.00	ST	STAKE RACK, CORNER,CONN SET, ZINC	13.24
	N	510	B2595	0.94	EA	SPRING LATCH ASSEMBLY,ZINC PLD	7.00
	N	510	B2595KZ	0.14	EA	KEEPER FOR B2595,ZINC PLD	2.00
	N	510	B2595LKB	1.25	EA	SPRING LATCH ASSY & KEEPER,	8.80
	N	510	B2595SH	0.85	EA	HANDLE,SPRING LATCH 1/2 ZN,W/SHORT HDL	7.45
	N	510	B2596	2.04	EA	SPRING LATCH ASSY,3/4IN,ZINC	12.00
	N	510	B2596KSS	0.50	EA	KEEPER FOR B2596SS,STAINLESS	14.20
	N	510	B2596KZ	0.40	EA	KEEPER FOR B2596,ZINC PLD	1.70
	N	510	B2596LKB	2.80	EA	SPRING LATCH ASSEMBLY,3/4IN W/KEEPER	14.30
	N	510	B2596LKBSS	2.70	EA	SPRING LATCH ASSEMBLY,3/4IN W/KEEPER SST	44.30
	N	510	B2596SS	2.05	EA	SPRING LATCH ASSY,3/4in,SST	29.55
	N	510	B2597	0.25	EA	SPRING LATCH, ZINC PLD	8.80
	N	510	B2598H	0.70	EA	LATCH,SPRING,W/HT TR PIN	8.80

Buyers Products Company * 9049 Tyler Blvd. * Mentor, OH 44060 *
*** F.O.B. Mentor, Ohio * $25.00 Minimum Order**

Price List in Effect on 12/1/2016 * For ALL Items in Catalogs * Marking NEW Pricing on Items Changed Since 11/1/2016

	N	510	B2598HU	0.70	EA	LATCH,SPRING,W/HT TR PIN, UNASSEMBLED	8.80
	N	510	B2598LP	1.00	EA	SPRING LATCH,1.25in EXT PLUNGER	8.65
	N	510	B2598SSC	0.74	EA	LATCH,SPRING, STAINLESS STEEL	17.98
	N	510	B2599LH	0.75	EA	LATCH,SPRING,LEFT HAND	10.65
	N	510	B2599RH	0.75	EA	LATCH,SPRING,RIGHT HAND	10.65
	N	730	B26994A	0.38	EA	STBD OFFSET YOKE END,3/8in-24	17.20
	N	730	B26996A	0.38	EA	OFFSET YOKE END, 1/2in-20	10.60
	N	705	B270210EB	2.11	EA	ROD END BLANK 1inx6in	18.90
	N	705	B270210EM	1.58	EA	ROD END 1inX 6in W/1inPH	20.40
	N	705	B270210HMZ	2.24	EA	ROD END,1in-8X9.25 W/6.5 THD ZN	23.35
	N	705	B270212KM	4.40	EA	ROD END,1.25inx12in, C4140 STEEL	37.76
	N	705	B27024BB	0.15	EA	STBD ROD END 3/8inX3-1/2in BLANK	4.90
	N	705	B27024BM	0.12	EA	ROD END MACHINED 3/8inPH	10.30
	N	705	B27026BM	0.23	EA	ROD END MACHINED 1/2inPH 1/2-13 THD	8.75
	N	705	B27026EB	0.44	EA	ROD END BLANK 1/2inx6in	6.25
	N	705	B27026EM	0.34	EA	ROD END MACHINED 1/2inPH-1/2in-13 THD	13.55
	N	705	B27026M10	0.56	EA	ROD END, MACHINED, 1/2-13, 1/2 PH	16.65
	N	705	B27027EB	0.70	EA	ROD END,BLANK 5/8inx6in	6.15
	N	513	B27027EKZ	0.52	EA	ROD END,5/8in-11x6in,5/8inPH,	9.70
	N	705	B27027EM	0.53	EA	ROD END MACHINED 5/8inPH 6inLONG	15.10
	N	705	B27028AB	0.75	EA	STBD ROD END BLANK 3/4inx3-1/2in	9.14
	N	705	B27028AM	3.17	EA	STBD ROD END MACHINED 3/4inPH,	16.40
	N	705	B27028EB	1.10	EA	ROD END 3/4inX6in BLANK	7.10
	N	705	B27028EM	0.88	EA	ROD END,3/4in-10,.781inPH,	13.10
	N	705	B27028LMZ	1.04	EA	ROD END .75inX 7.5in,W.63PH,ZINC	21.90
	N	740	B27081/210C	0.18	EA	PIN,CLEVIS,SHK DIA .625,OAL 1.753	2.40
	N	740	B27081/22AZ	0.01	EA	PIN,CLEVIS,SHK DIA .250,OAL .771	0.40
	N	740	B27081/23AZ	0.02	EA	PIN,CLEVIS,SHK DIA .313,OAL .941	0.55
	N	740	B27081/24AZ	0.04	EA	PIN,CLEVIS,SHK DIA .375,OAL 1.073,	0.65
	N	740	B27081/26AZ	0.09	EA	PIN,CLEVIS,SHK DIA .500,OAL 1.376	1.05
	N	740	B27081/26C	0.12	EA	PIN,CLEVIS,SHK DIA .500,OAL 1.975	1.85
	N	740	B27081/26D	0.14	EA	PIN,CLEVIS,SHK DIA .500,OAL 2.250	5.20
	N	740	B27081/27AZ	0.17	EA	PIN,CLEVIS,SHK DIA .625,OAL 1.616	2.08
	N	740	B27081/27BZ	0.09	EA	PIN,CLEVIS,SHK DIA .500,OAL 1.786	1.50
	N	740	B27081/27C	0.09	EA	PIN,CLEVIS,SHK DIA .500,OAL 1.560	1.25
	N	740	B27081/28AZ	0.30	EA	PIN,CLEVIS,SHK DIA .750,OAL 2.040	3.25
	N	730	B270810C	0.68	EA	ADJ YOKE END,5/8in-18,BRAKE,LGE	15.25
	N	730	B27081AZ	0.03	EA	CLEVIS,3/16-32 NF,W/3/16 DIA PIN HL,ASTM	5.10
	N	730	B27081AZKT	0.04	EA	CLEVIS,KIT W/CLEVIS PIN 10-32 W/3/16 PH	6.00
	N	730	B27082A	0.07	EA	ADJ YOKE END,1/4-28 NF W/1/4 DIA	3.90
	N	730	B27082AZ	0.07	EA	ADJ YOKE END,1/4in-28,ASTM B633 TYPE	5.10
	N	730	B27082AZKT	0.09	EA	CLEVIS,KIT W/CLEVIS PIN 1/4-28 NF,W/1/4	5.45
	N	730	B27083A	0.11	EA	CLEVIS,5/16-24 NF,W/5/16	4.05
	N	730	B27083A14Z	0.11	EA	ADJ YOKE,5/16inW/1/4in-28,ASTM B633	5.10

Buyers Products Company * 9049 Tyler Blvd. * Mentor, OH 44060 *
*** F.O.B. Mentor, Ohio * $25.00 Minimum Order**

Price List in Effect on 12/1/2016 * For ALL Items in Catalogs * Marking NEW Pricing on Items Changed Since 11/1/2016

	N	730	B27083A14ZKT	0.14	EA	CLEVIS,KIT W/CLEVIS PIN 1/4-28 NF W/5/16	5.95
	N	730	B27083AZ	0.10	EA	ADJ YOKE END 5/16in ZINC PLATED	4.85
	N	730	B27083AZKT	0.13	EA	CLEVIS,KIT W/CLEVIS PIN 5/16-24 NFW/5/16	5.80
	N	730	B27084A	0.16	EA	CLEVIS,3/8-24 NF W/3/8 PH	4.45
	N	730	B27084A12	0.17	EA	ADJ YOKE,3/8inPH,TAPPED 1/2in-20	7.55
	N	730	B27084A14Z	0.17	EA	ADJ YOKE,3/8inPH,1/4in-28TAP,ASTM	5.25
	N	730	B27084A14ZKT	0.23	EA	CLEVIS,KIT W/CLEVIS PIN 1/4-28 NF W/3/8	7.85
	N	730	B27084A56ZKT	0.22	EA	CLEVIS,KIT ZN PLD W/CLEVIS PIN ASTM	7.85
	N	730	B27084A56ZY	0.17	EA	ADJ YOKE END 3/8inW/5/16-24 TAP,ASTM	5.25
	N	730	B27084ALH	0.17	EA	STBD ADJ YOKE,3/8in-24, LEFT HAND	5.60
	N	730	B27084AZ	0.16	EA	ADJ YOKE END 3/8in,ZINC PLTD,bulk	5.30
	N	730	B27084AZKT	0.22	EA	CLEVIS,KIT W/CLEVIS PIN,3/8-24 NF W/3/8	6.00
	N	730	B27085A	0.24	EA	ADJ YOKE END 7/16in	5.00
	N	730	B27086A14Z	0.39	EA	ADJ YOKE END 1/2in FIN TAP 1/4-28, ASTM	7.80
	N	730	B27086A14ZKT	0.44	EA	*DISCONTINUED* CLEVIS,KIT ZN PLD	
	N	730	B27086A38ZKT	0.44	EA	CLEVIS,KIT,ZN PLTD W/CLEVIS PIN	7.15
	N	730	B27086A38ZY	0.39	EA	ADJ YOKE END 1/2inPH 3/8-24 TAP, ASTN	7.80
	N	730	B27086A56ZKT	0.44	EA	CLEVIS,KIT ZN PLD W/CLEVIS PIN	8.90
	N	730	B27086A56ZY	0.36	EA	ADJ YOKE END 1/2inW/5/16-24 FINE THD TAP	7.95
	N	730	B27086ANC	0.39	EA	ADJ YOKE END 1/2in-13 NC	5.20
	N	730	B27086ANCZ	0.39	EA	ADJ YOKE,1/2in-13, ZINC	6.25
	N	730	B27086ANF	0.34	EA	ADJ YOKE END 1/2in-20 NF	5.20
	N	730	B27086ANFZ	0.35	EA	ADJ YOKE END 1/2in ZINC PLATED	6.25
	N	730	B27086ANFZKT	0.44	EA	CLEVIS,KIT ZN PLD W/CLEVIS PIN	6.75
	N	730	B27086B	0.42	EA	ADJ YOKE END,1/2in-20 NF,LONG	8.40
	N	730	B27086C	0.38	EA	ADJ YOKE END,1/2in-20,SPREAD	10.20
	N	730	B27086E	0.50	EA	*DISCONTINUED REPLACED BY B27086EZ*	
	N	730	B27087ANC	0.88	EA	ADJ YOKE END 5/8in-11 UNC	11.00
	N	730	B27087ANF	0.88	EA	ADJ YOKE END 5/8in-18 NF	11.00
	N	730	B27087ANFZ	0.88	EA	ADJ YOKE END 5/8-18 ZINC	13.20
	N	730	B27087B	0.64	EA	ADJ YOKE,5/8in-18, W/1/2in P.H.	12.60
	N	730	B27087BB	0.64	EA	ADJ YOKE END 5/8inCURVED CLEVIS	11.85
	N	730	B27087C	0.24	EA	ADJ YOKE,BRAKE,5/8in-18,1/2inPH	4.60
	N	730	B27087CKT	0.37	EA	CLEVIS,KIT W/CLEVIS PIN,5/8-18	6.20
	N	730	B27088ANC	1.36	EA	ADJ YOKE END 3/4in-10 NC	20.30
	N	730	B27088ANF	1.20	EA	ADJ YOKE END 3/4in-16 NF	20.30
	N	750	B27094A	0.11	EA	PLAIN YOKE END 3/8in	5.95
	N	750	B27096A	0.24	EA	YOKE END,1/2 X 2-1/2,PLAIN	4.25
	N	750	B27096B	0.34	EA	stbd PLAIN YOKE END 1/2in	15.65

Buyers Products Company * 9049 Tyler Blvd. * Mentor, OH 44060 *
*** F.O.B. Mentor, Ohio * $25.00 Minimum Order**

Price List in Effect on 12/1/2016 * For ALL Items in Catalogs * Marking NEW Pricing on Items Changed Since 11/1/2016

	N	750	B27097A	0.63	EA	YOKE END,PLAIN, 5/8in X 4-3/4in	8.30
	N	750	B27098A	0.75	EA	STBD PLAIN YOKE END 3/4in	19.45
	N	523	B2744A	1.12	EA	STEP,ALUMINUM,WELD ON	13.20
	N	523	B2744S	3.20	EA	STEP,STEEL,WELD-ON	16.85
	N	523	B2797BPC	1.25	EA	FOLDING STEP-BLACK E COAT	8.45
	N	523	B2797PCH	0.00	EA	FOLDING STEP - PLAIN	5.50
	N	523	B2797SS	1.16	EA	FOLDING STEP,POLISH STAINLESS	23.25
	N	523	B2797Z	1.25	EA	FOLDING STEP, ZINC PLATED	8.95
	N	528	B2799B	3.50	PR	TOW HOOKS,FORGED,2PCS WLL/HOOK 10,000#	16.60
	N	528	B2799BKT	4.30	EA	TOW HOOK,BLK,PR.(KIT)W/CLIPS BOLTS&NUT	23.60
	N	528	B2800A	9.40	PR	TOW HOOKS,FORGED,L&R,13,500 LB	59.55
	N	528	B2800AB	9.08	PR	TOW HOOKS,LH & RH,BLACK POWDER	76.70
	N	528	B2800AC	9.40	PR	TOW HOOK CHROME PLATED,LH & RH PAIR	118.70
	N	528	B2801A	14.00	PR	TOW HOOK,FORGED,L&R, SOLD/PR	82.20
	N	528	B2801C	10.00	PR	TOW HOOKS,3 HOLE,L&R WLL/HOOK 44,500#	86.35
	N	520	B284001	0.35	EA	PIN,1/2in,ZINC,TAILGATE	3.25
	N	549	B28F	0.50	EA	D-RING,3/8in,FORGED,ZN PLT W/WLD-ON BRKT	6.75
	Y	010	B3005874	2.05	EA	SHAFT,STUB,1310 MIDSHIP	32.60
	N	240	B302845048	1.31	EA	CABLE,REMOTE VALVE SHIFT,48in,BOXED/LBL	35.20
	N	240	B302845060	1.41	EA	CABLE,REMOTE VALVE SHIFT,60in,BOXED/LBL	36.22
	N	240	B302845072	2.23	EA	CABLE,REMOTE VALVE SHIFT,72in,BOXED/LBL	39.00
	N	240	B302845084	2.44	EA	CABLE,REMOTE VALVE SHIFT,84in,BOXED/LBL	41.68
	N	240	B302845096	2.00	EA	CABLE,REMOTE VALVE SHIFT,96in,BOXED/LBL	44.28
	N	240	B302845108	2.07	EA	CABLE,REMOTE VALVE SHIFT,108in,BOXED/LBL	44.98
	N	240	B302845120	2.44	EA	CABLE,REMOTE VALVE SHIFT,120in,BOXED/LBL	50.34
	N	240	B302845132	2.44	EA	CABLE,REMOTE VALVE SHIFT,132in,BOXED/LBL	52.80
	N	240	B302845144	2.93	EA	CABLE,REMOTE VALVE SHIFT,144in,BOXED/LBL	53.70
	N	240	B302845168	3.25	EA	CABLE,REMOTE VALVE SHIFT,168in,BOXED/LBL	65.00
	N	240	B302845180	3.38	EA	CABLE,REMOTE VALVE SHIFT,180in,BOXED/LBL	62.68
	N	240	B302889	0.75	EA	CABLE,CONN KIT FOR RACINE ML25	25.10
	N	240	B302889M	0.75	EA	R.V.C.CONNECTION KIT FOR	18.30
	N	240	B302890	0.75	EA	CABLE,CONN KIT FOR CROSS BA,BC	22.55
	N	240	B303032	0.75	EA	GREASON 25P,GP,CS,V20,V42,	19.48
	N	240	B303034	0.75	EA	R.V.C. CONNECTION KIT,REX ROTH	25.10
	N	624	B303035	0.75	EA	R.V.C. CONNECTION KIT, BUYERS 21 SERIES	24.30
	N	624	B303036	0.46	EA	R.V.C. CONNECTION KIT, BUYERS 40 SERIES	38.00

Buyers Products Company * 9049 Tyler Blvd. * Mentor, OH 44060 *
*** F.O.B. Mentor, Ohio * $25.00 Minimum Order**

Price List in Effect on 12/1/2016 * For ALL Items in Catalogs * Marking NEW Pricing on Items Changed Since 11/1/2016

	N	240	B303418F	0.75	EA	R.V.C. CONNECTION KIT,	29.90
	N	240	B303418R	0.75	EA	R.V.C. CONNECTION KIT,	70.60
	Y	780	B30LP	14.63	PR	MUD FLAP,1/4inX24inX30in,RUBBER	45.80
	Y	810	B30LXP	18.00	PR	MUD FLAP 3/8in EX. HD PLAIN	58.15
	Y	833	B30PSRPB	14.00	PR	MUD FLAP, PLASTIC, PLAIN, BLACK	52.95
	Y	833	B30PSRPW	14.00	PR	MUD FLAP, PLASTIC, PLAIN, WHITE	60.05
	Y	820	B30SPP	27.00	PR	MUD FLAP,1/2in STA-PUT,24inWX30in	70.55
	Y	800	B30SRP	22.00	PR	MUD FLAP 1/2in PLAIN SPRAY	67.13
	N	547	B31648SC	1.90	EA	SAFETY CHAIN,3/16inX48inW/3/8in QUICK	5.52
***	N	549	B32F	0.42	EA	ROPE RING,3/8in W/BOLT ON BRACKET,ZINC	4.50
	N	549	B33	0.22	EA	ROPE RING,SURFACE MNT W/INTEGRAL BRKT,ZN	2.30
	N	100	B35P151	0.01	EA	GASKET 8 HOLE .010in	2.45
	N	100	B35P152	0.01	EA	GASKET 8 HOLE .020in	1.55
	N	100	B35P91	0.01	EA	GASKET 6 HOLE .010in	1.00
	N	100	B35P92	0.01	EA	GASKET 6 HOLE .020in	1.05
	Y	780	B36LP	16.50	PR	MUD FLAP,.25in x 24in x 36in,RUBBER	47.83
	Y	810	B36LXP	24.00	PR	MUD FLAP 3/8in EX. HD PLAIN 24Wx36L	61.33
	Y	833	B36PSRPB	14.69	PR	MUD FLAP, PLASTIC, PLAIN,	63.50
	Y	833	B36PSRPW	17.00	PR	MUD FLAP, PLASTIC, PLAIN,	72.00
	Y	820	B36SPP	33.00	PR	MUD FLAP,1/2in STA-PUT,24inWX36in	79.75
	Y	800	B36SRP	24.38	PR	MUD FLAP 1/2in PLAIN SPRAY	69.80
	N	524	B38	1.00	EA	D-RING,1/2inFORGED,2-1/2X2-3/8W/2HL BRKT	10.10
	N	524	B38RP	1.80	EA	D-RING,FORGED,2-HOLE MNT W/RD REC PAN ZN	20.90
	N	524	B38S	1.15	EA	D-RING,1/2in DIA W/INTERGRAL BRACKET	10.90
	N	524	B38SP	3.80	EA	D-RING,STAKE POCKET,BLACK POWDER COAT	26.95
	N	524	B38W	0.95	EA	D-RING,1/2in, 2-1/2x2-3/8 W/WELD ON BRKT	10.10
	N	524	B38ZW	0.93	EA	D-RING 1/2in FORGED w/BRKT,WHITE ZINC	10.20
	N	524	B38ZY	0.93	EA	D-RING 1/2in FORGED w/2 HOLE,BRACKET	10.60
	N	524	B39W	1.21	EA	D-RING,1/2in FORGED,4-1/2X2-1/2W W/WELD	10.85
	N	524	B40	1.84	EA	D-RING,5/8 dia3inX3in,FORGED,W/BRKT	11.53
	N	370	B4000	8.26	PR	RUBBER BUMPER, 6inX8inX3in (PAIR)	34.62
	N	644	B40002	0.35	EA	COUPLER,HYD QUICK,1/4inNPTF	14.40
	N	644	B40002DC	0.03	EA	QUICK COUPLER-DUST CAP 1/4in	4.15
	N	644	B40002DP	0.02	EA	QUICK COUPLER-DUST PLUG 1/4in	4.52
	N	644	B40003	0.67	EA	COUPLER,HYD QUICK,3/8inNPTF	27.20
	N	644	B40003DC	0.04	EA	QUICK COUPLER-DUST CAP 3/8in	4.90
	N	644	B40003DP	0.04	EA	QUICK COUPLER-DUST PLUG 3/8in	4.90
	N	644	B40004	0.80	EA	COUPLER,HYD QUICK,1/2inNPTF	35.70
	N	644	B40004DC	0.04	EA	QUICK COUPLER-DUST CAP 1/2in	4.86
	N	644	B40004DP	0.04	EA	QUICK COUPLER-DUST PLUG 1/2in	4.86
	N	644	B40005	1.00	EA	COUPLER,HYD QUICK,3/4inNPTF	86.40

Buyers Products Company * 9049 Tyler Blvd. * Mentor, OH 44060 *
*** F.O.B. Mentor, Ohio * $25.00 Minimum Order**

Price List in Effect on 12/1/2016 * For ALL Items in Catalogs * Marking NEW Pricing on Items Changed Since 11/1/2016

	N	644	B40005DC	0.07	EA	QUICK COUPLER-DUST CAP 3/4in	7.30
	N	644	B40005DP	0.11	EA	QUICK COUPLER-DUST PLUG 3/4in	7.20
	N	644	B40006	2.17	EA	COUPLER,HYD QUICK,1inNPTF	94.80
	N	644	B40006DC	0.14	EA	QUICK COUPLER-DUST CAP 1in	9.30
	N	644	B40006DP	0.10	EA	QUICK COUPLER-DUST PLUG 1in	9.00
	N	630	B40B45	0.21	EA	HOUR METER,10-80V DC	31.65
	Y	780	B40LP	18.00	PR	MUD FLAP PLAIN 1/4in 24W X 40L	50.05
	Y	810	B40LXP	28.00	PR	MUD FLAP 3/8in EX. HD PLAIN	64.23
	N	524	B40MP	5.06	EA	D-RING, KIT,W/MTGING PLATE AND CARRIAGE	29.95
	N	629	B431616U	1.51	EA	FLANGE ADAPTER 1in SAE 4 BOLT	35.05
	N	629	B432020U	2.04	EA	FLANGE ADAPTER 1 1/4in SAE 4	40.25
	N	629	B432424U	3.02	EA	FLANGE ADAPTER 1 1/2in SAE 4	46.05
	N	629	B433232U	4.90	EA	FLANGE ADAPTER 2inSAE 4 BOLT TO	60.15
	N	629	B434040U	5.06	EA	FLANGE ADAPTER 2 1/2in SAE 4	83.50
	N	700	B450	0.11	EA	ROPE CLIP, DIE CAST	2.65
	N	370	B4500	10.50	PR	RUBBER BUMPER 6inX8inX3.5in (PAIR)	39.08
	N	524	B46	2.17	EA	D-RING,3/4in dia 3in X 3in FORGED W/BRKT	16.64
	N	524	B46BF	0.58	EA	BRACKET,B46BF	3.65
	N	524	B48	4.45	EA	D-RING,1in dia,3in X 3in,FORGED,W/BRKT	19.15
	N	524	B50	4.75	EA	D-RING,1in dia,4inH X 3inW,FORGED,W/BRKT	20.06
	N	524	B5055	4.63	EA	D-RING,1in,FORGED,CURVED,W/BRKT	22.23
	N	524	B51	7.10	EA	D-RING,1in DIA.,FORGED,ROTATING,HARDWARE	48.55
	N	524	B52	7.10	EA	D-RING,1in DIA., OFFSET, FORGED,ROTATING	49.65
	N	874	B52150	30.00	RL	FENDER EXTENSION-50ft RUBBER HD	260.40
	N	874	B52169	28.00	RL	FENDER EXTENSION-50FT ROLL - NO LIP	236.85
	N	370	B5264	6.50	PR	BUMPER,RUBBER,2.5X4.13X6.75 (PAIR)	22.63
	N	370	B5500	5.40	PR	BUMPER, RUBBER, 3inX3.5inX6in (PAIR)	22.40
	N	370	B5540	3.30	PR	BUMPER,RUBBER,2.5inX3inX6in,(PAIR)	16.08
	N	550	B56721	0.05	EA	EYE BOLT,FORGED,1/4in-20	5.05
	N	550	B56722	0.11	EA	EYE BOLT,FORGED,5/16in-18	5.20
	N	550	B56723	0.20	EA	EYE BOLT,FORGED,3/8in-16	5.40
	N	550	B56724	0.23	EA	EYE BOLT,FORGED,7/16in-14	8.00
	N	550	B56725	0.38	EA	EYE BOLT,FORGED,1/2in-13	7.00
	N	550	B56726	0.47	EA	EYE BOLT,FORGED,9/16in-12	13.30
	N	550	B56727	0.69	EA	EYE BOLT,FORGED,5/8in-11	11.10
	N	550	B56728	1.00	EA	EYE BOLT,FORGED,3/4in-10	12.70
	N	550	B56729	1.50	EA	EYE BOLT,FORGED,7/8in-9	20.15
	N	550	B56730	2.25	EA	EYE BOLT,FORGED,1in-8	26.25
	N	550	B56730C	2.25	EA	EYE BOLT CHROME PLATED	47.90
	N	550	B56732	4.50	EA	EYE BOLT,FORGED,1-1/4in-7	53.55
	N	550	B56734	8.00	EA	STBD EYE BOLT,FORGED,1-1/2-6	93.45
	N	550	B56734BLK	9.00	EA	EYEBOLT,2-1/2in ID EYE	49.50
	N	550	B56735	11.50	EA	STBD EYE BOLT,FORGED,1-3/4in-5	154.50
	N	513	B575A	0.24	EA	LEVER NUT 3/8in-16, FORGED	5.80

Buyers Products Company * 9049 Tyler Blvd. * Mentor, OH 44060 *
*** F.O.B. Mentor, Ohio * $25.00 Minimum Order**

Price List in Effect on 12/1/2016 * For ALL Items in Catalogs * Marking NEW Pricing on Items Changed Since 11/1/2016

	N	520	B575CZ	0.29	EA	LEVER NUT,1/2in-13,ZINC PLTD.	7.10
	N	513	B575GZ	0.73	EA	LEVER NUT,3/4-10,FORGED,ZNC PL	8.05
	N	370	B5760	2.40	PR	BUMPER RUBBER,2inX2.5inX8in(PAIR)	17.20
	N	370	B6000L	6.00	PR	BUMPER,RUBBER,HD 3.5inX3.5inX6in (PAIR)	26.15
	N	549	B601	0.42	EA	ROPE RING,REC,CTSK HOLES,ZINC, WLL 285#	3.60
	N	549	B601U	0.42	EA	ROPE RING,RECESSED,.260inHOLES WLL 285#	3.60
	N	636	B63322	0.48	EA	SOLENOID-CANISTER, FITS PU311	94.90
	N	290	B659KB	0.13	EA	KNOB,BLACK FOR Q-SERIES AND	3.50
	N	549	B701SM	0.28	EA	ROPE RING,SURFACE MOUNT,ZN, WLL 265#	2.80
	N	549	B703	0.35	EA	ROPE RING,SURFACE MOUNT OR RECESSED	2.80
	N	549	B705	0.20	EA	ROPE RING,SURFACE MOUNT,PLASTIC PAN	2.26
	N	889	B745229T	1.69	EA	LAMP-AMBER STROBE, PERM MOUNT	99.90
	N	889	B745236T	2.58	EA	LAMP,AMBER STROBE MAGNETIC MNT	109.90
	N	549	B801A	1.15	EA	TIE DOWN,6,000 CAPACITY,RECESSED	6.98
	N	549	B801AK	2.50	EA	TIE DOWN KIT,801A, WLL 2,000#	15.30
	N	543	B8978	3.80	EA	CHANNEL,(3) POSITION,4 HOLE	18.35
	N	543	B8979	7.25	EA	CHANNEL,(5) POSITION W/GUSSETS	33.50
	N	370	B9000	17.50	PR	BUMPER,RUBBER,LAMINATED,WELD-ON,2/box	65.95
	N	549	B901	2.50	EA	ROPE RING,TIE DOWN,360 SWIVEL,WLL 2,000#	22.00
	N	543	B9020	1.00	EA	HARDWARE KIT,ADJUSTABLE CHANNEL	5.70
	N	543	B9021	1.00	EA	HARDWARE, KIT	7.90
	Y	040	B91322SF	13.56	EA	1310 SOLID SHAFT ASSY, 1-1/8in HEX	145.25
	Y	020	B91382SF	13.56	EA	1310 SOLID SHAFT ASSY	128.45
	Y	840	B915PPB	1.12	PR	MUD FLAP,PLASTIC,9x15 x .150, UTILITY	8.40
	N	547	B93234SC	2.08	EA	SAFETY CHAIN,9/32X34inw/QUICK LINK	6.76
	N	547	B93248SC	2.88	EA	SAFETY CHAIN,9/32inx48in w/3/8in QUICK	8.40
	N	547	B93254SC	3.65	EA	SAFETY CHAIN,9/32x54inw/QUICK LINK	9.20
	N	547	B93272SC	4.39	EA	SAFETY CHAIN,9/32nx72in w/QUICK LINK	10.50
	N	888	B95	0.80	EA	B95 B/UP/BODY UP LIMITSWITCH,15 AMP	28.75
	Y	020	B9553SF	15.00	EA	1310 TUBULAR SHAFT ASSY 48in	139.95
	N	888	B95W	0.80	EA	SWITCH,BODY-UP LIMIT,PREWIRED	31.75
	N	639	B96W	0.20	EA	SWITCHBODY-UP LIMIT,PREWIRED,18 AWG	55.10
	N	600	B98596	0.83	EA	SOLENOID-STEELCASE W/SLOTS	16.45
	N	543	B9909	8.07	EA	CHANNEL,HEAVY DUTY(3) POSITION W/GUSSETS	34.90
	N	543	B9912	12.27	EA	CHANNEL,HEAVY DUTY(5) POSITION W/GUSSETS	45.60
	N	888	BA0972	0.42	EA	BACK UP ALARM, 97DB, STD.	28.88
	N	520	BA1	0.06	EA	ADAPTER,BATTERY BOLT,BULK	4.10

Buyers Products Company * 9049 Tyler Blvd. * Mentor, OH 44060 *
*** F.O.B. Mentor, Ohio * $25.00 Minimum Order**

Price List in Effect on 12/1/2016 * For ALL Items in Catalogs * Marking NEW Pricing on Items Changed Since 11/1/2016

	N	888	BA102	0.60	EA	ALARM,BACK-UP,102 DECIBLE,SELF GROUND	30.25
	N	888	BA107	0.68	EA	ALARM,BACK-UP,107dB,SELF GROUNDING	31.65
	N	520	BA2	0.12	EA	ADAPTER,BATTERY,BOLT,SIDE TERMINAL,LONG	5.40
	N	520	BA3	0.07	EA	ADAPTER,BATTERY,BOLT,TOP TERMINAL,BULK	4.28
	N	520	BA4	0.01	EA	ADAPTER,BATTERY,TERMINAL TAP & GROUND,	2.45
	N	220	BA52	4.66	EA	SHIFTER,AIR PTO HOIST,SGL LVR	83.95
	N	220	BA62	4.50	EA	SHIFTER,AIR PTO HOIST,SGL LVR	83.95
	N	646	BASK16	1.43	EA	CYL, AIR SHIFT FOR G101/G102/CH101/102	170.00
	N	646	BASK16P	1.38	EA	CYLINDER,AIR SHIFT FOR H101/H102	170.00
	N	645	BAV010	0.50	EA	VALVE,AIR,4WAY,2 POS	33.55
	N	220	BAV015	0.67	EA	AIR VALVE, W/KNOB,PUSH-PULL, 4WAY, 3 POS	55.76
	N	649	BAV01502	0.02	EA	AIR VALVE BREATHER 1/8inNPT	2.20
	N	645	BAV020	1.86	EA	VALVE,AIR,4WAY,3POS,PUSH-PULL	66.00
	N	645	BAV02002	0.02	EA	BREATHER 1/4in NPT	3.50
	N	645	BAV020T	0.43	EA	AIR VALVE TOGGLE STYLE	59.90
	N	645	BAV020TD	0.43	EA	VALVE, TOGGLE DETENTED	80.00
	N	645	BAV030	0.92	EA	VALVE,AIR,3-WAY 2-POSITION	47.75
	N	639	BAV030B	0.31	EA	BULB FOR BAV030 (PTO VALVE) 3/4in AMBER	13.65
	N	645	BAV030C	5.94	EA	VALVE SHIFT CONSOLE	59.55
	N	645	BAV040	2.00	EA	VALVE,AIR,4 WAY 3 POSITION	89.00
	N	645	BAV050SA	0.57	EA	VALVE,SOLENOID,4 WAY 2 POSN	95.00
	N	649	BBT0M25P125S	0.10	EA	FITTING,MALE BRANCH TEE,SWIVEL	10.12
	N	649	BBT0M25P25S	0.12	EA	FITTING,MALE BRANCH TEE,SWIVEL	11.90
	N	649	BBT0M375P25S	0.14	EA	FITTING,MALE BRANCH TEE,SWIVEL	12.69
	N	649	BBT0M375P375S	0.15	EA	FITTING,MALE BRANCH TEE,SWIVEL	17.89
	N	649	BC00M25P125	0.03	EA	FITTING,CONNECTOR,MALE,DOT,	4.84
	N	649	BC00M25P25	0.05	EA	FITTING,CONNECTOR,MALE,DOT,	5.39
	N	649	BC00M375P25	0.05	EA	FITTING,CONNECTOR,MALE,DOT,	8.82
	N	649	BC00M375P375	0.08	EA	FITTING,CONNECTOR,MALE,DOT,	9.42
	N	645	BC12914	29.95	EA	CONSOLE BOX, ASSEMBLY	140.00
	N	542	BC2A	0.60	EA	BRAKE CONTROLLER 3 AXLE, 3 YEAR WARRANTY	81.00
	N	542	BC3AP	0.60	EA	BRAKE CONTROLLER (3) AXLE, PROPORTIONAL	132.28
	N	635	BC40	0.74	EA	BREATHER, BAYONET 40 MIC PLAST	25.55
	N	542	BC4APD	0.70	EA	BRK CNTRLR (4) AXLE,PROPORTIONAL/DIGITAL	163.00
	N	627	BCA16180	0.41	EA	ADAPTOR,BARBED 1in	6.50
	N	627	BCA20180	0.66	EA	ADAPTOR,BARBED 1-1/4in	13.20

Buyers Products Company * 9049 Tyler Blvd. * Mentor, OH 44060 *
*** F.O.B. Mentor, Ohio * $25.00 Minimum Order**

Price List in Effect on 12/1/2016 * For ALL Items in Catalogs * Marking NEW Pricing on Items Changed Since 11/1/2016

	N	542	BCHD	0.25	EA	BRAKE CONTROLLER HARNESS,DODGE	23.10
***	N	542	BCHD1	0.25	EA	BRAKE CONTROLLER HARNESS,DODGE/RAM	29.50
***	N	542	BCHD2	0.25	EA	BRAKE CONTROLLER HARNESS,DODGE/RAM	42.40
	N	542	BCHF	0.25	EA	BRAKE CONTROLLER HARNESS , FORD	19.32
	N	542	BCHF1	0.35	EA	WIRING HARNESS,BRAKE	26.90
	N	542	BCHF2	0.25	EA	WIRING HARNESS,BRAKE CONTROLLER,	33.70
	N	542	BCHGM03	0.25	EA	BRAKE CONTROLLER HARNESS GM 03+	19.36
***	N	542	BCHGM04	0.25	EA	BRAKE CONTROLLER HARNESS,CHEVY/GMC	34.50
	Y	529	BCL500	0.40	EA	COUPLER LATCH LOCK,PLD,1/4 PINx3/4 SPAN	7.60
	N	527	BDB12281	20.25	EA	DRAWBAR,2-1/2inID,10 TON CAP.	86.30
	N	527	BDB1235	42.00	EA	stbd DRAWBAR,3.00in ID,35,000 LB MGTW,	199.75
	N	527	BDB1238	27.00	EA	DRAWBAR,3inID,11 TON CAP	117.15
	N	527	BDB1245	42.00	EA	STBD DRAWBAR,2.38in ID,40,000 LB MGTW,	207.75
	N	527	BDB12492H	16.00	EA	DRAWBAR,3inID,EYEBOLT,22TON,CAP	94.00
	N	527	BDB125015	17.10	EA	DRAWBAR,2.5inID,4-BOLT,21 TON	94.25
	N	527	BDB125015W	14.48	EA	DRAWBAR,2.5inID,4-BOLT,21 TON	85.30
	N	527	BDB12503	9.00	EA	DRAWBAR,2.5inID,EYE BOLT,7.5TON	64.70
	N	527	BDB1385	19.48	EA	DRAWBAR,3inID,4 BLT MNT,30 TON	121.70
	N	527	BDB13850Z	19.48	EA	DRAWBAR,3inID,4 BLT MNT,30 TON CLR ZINC	129.00
	N	527	BDB1394	20.00	EA	DRAWBAR,45 TON, 4-BOLT,BLACK	132.85
	N	527	BDL253	4.00	EA	DRAWBAR-LOCK 2-1/2 to 3in	27.25
	N	220	BDS52	7.50	EA	SHIFTER,HOIST+PTO,DUAL LEVER	137.90
	N	220	BDS62	7.50	EA	SHIFTER,HOIST+PTO,DUAL LEVER	137.90
	N	649	BE90M25P125	0.05	EA	FITTING,ELBOW,MALE,DOT,PUSH-IN	5.59
	N	649	BE90M25P125S	0.05	EA	FITTING,MALE SWIVEL,ELBOW,DOT,	6.71
	N	649	BE90M25P25	0.07	EA	FITTING,ELBOW,MALE,DOT,PUSH-IN	7.17
	N	649	BE90M25P25S	0.09	EA	FITTING,MALE SWIVEL,ELBOW,DOT	7.24
	N	649	BE90M375P25	0.09	EA	FITTING,ELBOW,MALE,DOT,PUSH-IN	7.70
	N	649	BE90M375P25S	0.10	EA	FITTING,MALE SWIVEL,ELBOW,DOT,	11.35
	N	649	BE90M375P375	0.10	EA	FITTING,ELBOW,MALE,DOT,PUSH-IN	10.91
	N	649	BE90M375P375S	0.12	EA	FITTING,MALE SWIVEL,ELBOW,DOT,	13.49
	N	635	BECO61A	0.24	EA	BREATHER CAP,PUSH IN TYPE,CRM	6.35
	N	635	BECO61AB	0.24	EA	BREATHER CAP,PUSH IN TYPE, BLK	8.50
	Y	390	BFE12G	0.70	EA	PILLOW BLOCK, 3/4in	7.76
	Y	390	BFE13G	0.70	EA	*DISCONTINUED* PILLOW BLOCK, 13/16in	
	Y	390	BFE16G	0.70	EA	PILLOW BLOCK, 1in	9.38
	Y	390	BFE20G	0.70	EA	PILLOW BLOCK,1-1/4in	8.66

Buyers Products Company * 9049 Tyler Blvd. * Mentor, OH 44060 *
*** F.O.B. Mentor, Ohio * $25.00 Minimum Order**

Price List in Effect on 12/1/2016 * For ALL Items in Catalogs * Marking NEW Pricing on Items Changed Since 11/1/2016

	Y	521	BH102000	19.00	EA	HITCH,COMBINATION, 10 TON W/2inBALL,	150.05
	Y	521	BH102516	19.70	EA	HITCH,COMBINATION, 10 TON W/2-5/16inBALL	158.70
	N	514	BH2395AA11	1.87	EA	DOOR CHECK 11inARM 50 LB SPRING	16.00
	N	638	BH36SF10	132.00	EA	RESERVOIR,HYDRAULIC,36 GAL,BULKHEAD	1,082.90
	N	638	BH36SF25	132.00	EA	RESERVOIR,HYDRAULIC,36 GAL,BULKHEAD	1,082.90
	Y	521	BH81780	13.00	EA	HITCH,COMBINATION W/1-7/8inBALL	108.50
	Y	521	BH82000	13.00	EA	HITCH,COMBINATION W/2inBALL	108.50
	Y	521	BH82516	13.50	EA	HITCH,COMBINATION W/2-5/16BALL	112.85
	Y	521	BH850MM	13.08	EA	HITCH,COMBINATION W/50MM BALL	111.70
	N	510	BHC207Z	0.18	EA	CATCH,PULL DOWN W/PADLOCK EYE BAGGED &	3.20
	N	510	BHC227Z	0.15	EA	CATCH,PULL DOWN W/PADLOCK EYE,ZN BAGGED	1.90
	N	510	BHC801Z	0.15	EA	CATCH,HD PULL DOWN CATCH ONLY,ZINC	2.80
	N	627	BHEPS4X5	0.50	EA	NIPPLE COMBINATION 1inNPT X	9.90
	N	627	BHEPS5X6	0.53	EA	NIPPLE, COMBINATION 1 1/4in NPT	10.40
	N	627	BHES4X5	0.35	EA	NIPPLE, COMBINATION 1in NPT X	9.55
	N	627	BHRPS6X5	0.83	EA	NIPPLE, COMBINATION 1-1/2 NPT	12.05
	N	310	BJ31	0.13	EA	BALL JOINT, 10-32 THD.	3.47
	N	310	BJ52	0.08	EA	BALL JOINT 1/4in-28 THD.	2.65
	N	310	BJ62	0.08	EA	BALL JOINT 5/16in-24 THD.	3.08
	N	310	BJ72	0.25	EA	BALL JOINT 3/8in-24 THD.	4.36
	N	310	BJ82	0.31	EA	BALL JOINT 1/2in-20 THD.	7.85
	Y	535	BKPT809B	12.88	EA	KINGPIN,2in,FORGED,.50inBOLSTER,	
	N	639	BL10	0.16	EA	BUZZER LIGHT,12 VOLT	33.00
	Y	529	BLHP125	0.80	EA	LOCKING 1/2in PIN FOR 1.25inTUBE,CLAM	13.40
	Y	529	BLHP200	1.06	EA	HITCH PIN, LOCKING,5/8in,CLAM	13.40
	Y	529	BLHP300	0.85	EA	HITCH PIN,LOCKING,5/8in,BONE STYLE,CLAM	17.95
	Y	529	BLHP400	0.75	EA	HITCH PIN,LOCKING,1/2in & 5/8in,SLEEVED	19.90
	N	520	BM2395AA11	1.69	EA	DOOR CHECK 11in ARM 30lb SPRING	15.40
	N	300	BNW015	0.29	EA	HARDWARE KIT,(4)ea5/8-18 NUT+5/8 WASHER	1.45
	N	300	BNW016	0.19	EA	62 SERIES KIT(4)ea11/16-16NUT+11/16 WASH	3.15
	N	525	BP100A	37.00	EA	PINTLE HOOK,SPRING MNT,15 TON	188.48
	N	525	BP125A	49.64	EA	PINTLE HOOK-SWIVEL TYPE 15 TON CAPACITY	270.29
	Y	530	BP141624	18.00	EA	TOOLBOX,ALUMINUM,B-PACK,UNDBDY,14X16X24	528.45
	N	525	BP200	37.90	EA	PINTLE HOOK,SWIVEL,25 TON	244.84
	N	525	BP225	47.00	EA	PINTLE HOOK,SWIVEL,25 TON	329.11
	N	525	BP760A	38.25	EA	PINTLE HOOK,FORGED, HD,SWIVEL TYPE	286.60
	Y	592	BP824624	216.00	EA	TOOLBOX,ALUMINUM,B-PACK,82X46X24w/MNTKIT	3,958.00

Buyers Products Company * 9049 Tyler Blvd. * Mentor, OH 44060 *
*** F.O.B. Mentor, Ohio * $25.00 Minimum Order**

Price List in Effect on 12/1/2016 * For ALL Items in Catalogs * Marking NEW Pricing on Items Changed Since 11/1/2016

	Y	592	BP824624B	454.00	EA	TOOLBOX,B-PACK,82X46X24 W/MTG RAIL BLACK	3,277.00
	Y	592	BP824624W	454.00	EA	TOOLBOX,B-PACK,82X46X24 W/MTG RAIL WHITE	3,345.00
	Y	592	BP825524	234.00	EA	TOOLBOX,ALUMINUM,B-PACK,82X55X24 W/MNT	3,958.00
	Y	592	BP826224	254.00	EA	TOOLBOX,ALUMINUM,B-PACK,82X62X24 W/	4,400.00
	Y	592	BP855524B	538.00	EA	TOOLBOX,B-PACK,85X55X24 W/MNT RAIL,BLACK	3,277.00
	Y	592	BP855524P	538.00	EA	TOOLBX,B-PACK,85X55X24W/MNT RAIL,PRIMED	3,322.20
	Y	592	BP855524W	538.00	EA	TOOLBOX,B-PACK,85X55X24 W/MNT RAIL,WHITE	3,322.20
	Y	592	BP855924	350.01	EA	TOOLBOX, ALUMINUM,B-PACK,85X59X24	3,990.00
	Y	592	BP855924B	536.00	EA	TOOLBOX, B-PACK,85X59X24, FLAT BOTTOM W/	3,550.00
	Y	592	BP855924P	536.00	EA	TOOLBOX, B-PACK,85X59X24, FLAT BOTTOM W/	3,550.00
	Y	592	BP855924W	536.00	EA	TOOLBOX, B-PACK,85X59X24, FLAT BOTTOM W/	3,550.00
	N	525	BP880	62.00	EA	PINTLE HOOK,FORGED,SWIVEL-TYPE,50 TON	550.90
	Y	592	BP925824	255.00	EA	TOOLBOX,ALUMINUM,B-PACK,92X58X24 W/MNT	4,746.00
	N	621	BPC1010BR	5.06	EA	PUMP BRACKET REPLACEMENT PART	30.71
	N	230	BPT	0.88	EA	PTO CONNECTION KIT, DUAL GEAR	20.25
	N	230	BPTSG	0.88	EA	PTO CONNECTION KIT,SGL GEAR	20.25
	N	230	BPU	1.54	EA	PUMP CONNECTION KIT FOR C101	26.40
	N	230	BPU102DMCCW	1.70	EA	CONNECT KIT,DIRECT MNT,CCW	31.05
	N	230	BPU102DMCW	1.70	EA	CONNECT KIT,DIRECT MNT,CW	31.05
	N	230	BPUGD	2.65	EA	PUMP CONN KIT,G101 REMOTE MT	31.05
	N	230	BPUGDMCCW	2.60	EA	PUMP CONNECTION KIT-DIRECT MNT	31.05
	N	230	BPUGDMCW	2.60	EA	PUMP CONNECTION KIT,DIRECT MNT	31.05
	N	300	BQ52105	0.10	EA	HARDWARE KIT, Q SERIES .25 CA	9.60
	N	300	BQ62106	0.10	EA	CONNECTION KIT,5/16-24	10.80
	N	635	BRA64000	0.00	EA	GASKET, BAYONET CAP CORK FOR TC0015	1.70
	N	635	BRA64500	0.01	EA	GASKET, BASKET 6 HOLES FOR TFA005715	2.30
	N	546	BRB03	2.30	EA	U-BOLT,SAFETY CHAIN,KIT	10.35
	N	310	BRE32F	0.13	EA	ROD END BALL SWIVEL 10-32 THD	8.50
	N	310	BRE32M	0.03	EA	ROD END BALL SWIVEL,10-32	9.66
	N	310	BRE32S	0.13	EA	ROD END BEARING W/STUD, 10-32	10.88
	N	310	BRE52F	0.08	EA	ROD END BALL SWIVEL 1/4in-28THD	8.71
	N	310	BRE52M	0.06	EA	ROD END BALL SWIVEL,1/4-28	9.90
	N	310	BRE52S	0.13	EA	ROD END BEARING W/STUD,1/4-28	10.48
	N	310	BRE62F	0.13	EA	ROD END BALL SWIVEL 5/16-24THD	10.16
	N	310	BRE62M	0.06	EA	ROD END BALL SWIVEL,5/16-24	10.75
	N	310	BRE62S	0.13	EA	ROD END BEARING W/STUD,5/16-24	11.54
	N	310	BRE72F	0.13	EA	ROD END BALL SWIVEL 3/8-24 THD	11.13

Buyers Products Company * 9049 Tyler Blvd. * Mentor, OH 44060 *
*** F.O.B. Mentor, Ohio * $25.00 Minimum Order**

Price List in Effect on 12/1/2016 * For ALL Items in Catalogs * Marking NEW Pricing on Items Changed Since 11/1/2016

	N	310	BRE72M	0.10	EA	ROD END BALL SWIVEL,3/8-24	12.58
	N	310	BRE72S	0.18	EA	ROD END BEARING W/STUD, 3/8-24	13.46
	N	310	BRE82F	0.13	EA	ROD END BALL SWIVEL 1/2in-20THD	20.46
	N	310	BRE82M	0.23	EA	ROD END BALL SWIVEL,1/2-20	23.96
	N	310	BRE82S	0.35	EA	ROD END BEARING W/STUD,1/2in-20	28.26
	N	649	BRT0M25P125	0.08	EA	FITTING,MALE RUN TEE,DOT,PUSH-	8.80
	N	649	BRT0M25P125 S	0.10	EA	FITTING,MALE RUN TEE,SWIVEL,	13.09
	N	547	BSC3835	5.75	EA	SAFETY CHAIN,3/8inX35in W/ CLEVIS SLIP	13.88
	N	547	BSC3842	6.68	EA	SAFETY CHAIN,3/8inX42in 15K LBS W/CLEVIS	18.00
	Y	845	BSGD2424	11.00	PR	MUD FLAP,BLEND,24X24X3/8inDEEP GROOVE, B	36.50
	Y	845	BSGD2430	13.80	PR	MUD FLAP,BLEND,24X30X3/8inDEEP GROOVE,BK	45.65
	Y	845	BSGD2436	16.60	PR	MUD FLAP,BLEND,24X36X3/8inDEEP GROOVE,BK	54.70
	Y	845	BSGS2018	5.34	PR	MUD FLAP,BLEND,20X18X1/4inSHALLOW GROOVE	18.10
	Y	845	BSGS2030	11.30	PR	MUD FLAP,BLEND,20X30X1/4inSHALLOW GROOVE	26.94
	Y	845	BSGS2424	8.85	PR	MUD FLAP, BLEND,24x24x1/4inSHALLOW GROOV	28.88
	Y	845	BSGS2430	12.20	PR	MUD FLAP,BLEND,24X30X1/4inSHALLOW GROOVE	36.13
	Y	845	BSGS2436	14.64	PR	MUD FLAP,BLEND,24X36X1/4inSHALLOW GROOVE	43.35
	N	220	BSSPT52	3.85	EA	SHIFTER,SINGLE CONTROL,P.T.O.	68.95
	N	220	BSSPT62	3.85	EA	SHIFTER,SINGLE CONTROL,P.T.O.	68.95
	N	220	BSSPU52	3.85	EA	SHIFTER,SINGLE CONTROL,HOIST	68.95
	N	220	BSSPU62	3.85	EA	SHIFTER,SINGLE CONTROL,HOIST	68.95
	N	230	BSV3552	1.85	EA	CONNECTION KIT,FOR COMMERCIAL	31.05
	N	600	BSW002	0.36	EA	SWITCH,TAILGATE,H.D.	20.80
	N	645	BSW050	0.20	EA	SWITCH w/KNOB&PLATE (COMPLETE)	17.46
	N	639	BSW90030	0.11	EA	SWITCH,MOMENTARY PUSH BUTTON	7.50
	N	220	BTA52	8.18	EA	SHIFTER,inBinSERIES,HOIST/HOIST	158.90
	N	220	BTA62	8.50	EA	SHIFTER,inBinSERIES,HOIST/HOIST	158.90
	N	512	BTB030	3.10	EA	BRACKET, TAILGATE UPPER 1-1/4in	17.24
	N	220	BTD	11.68	EA	CONSOLE,TOWER DUAL LEVER CONT	38.40
	N	512	BTL020B2	6.00	EA	LATCH ASSEMBLY,TAILGATE,1 INCH SHAFT	37.50
	N	512	BTL030B2	6.00	EA	LATCH ASSEMBLY,TAILGATE,1-1/4inch	37.50
	N	512	BTL030B656	6.00	EA	TAILGATE LATCH, 21/32inPIN HOLE	37.50
	N	512	BTL030M2	6.00	EA	LATCH ASSEMBLY,WIDE TAILGATE,1-1/4	43.20
	Y	320	BTN011	0.90	BG	TIES, NYLON 11in (500/BAG)	49.40
	Y	320	BTN011WR	0.91	BG	TIES, NYLON 11in BLACK (500/BAG)	57.00

Buyers Products Company * 9049 Tyler Blvd. * Mentor, OH 44060 *
*** F.O.B. Mentor, Ohio * $25.00 Minimum Order**

Price List in Effect on 12/1/2016 * For ALL Items in Catalogs * Marking NEW Pricing on Items Changed Since 11/1/2016

	Y	320	BTN011WRCPK	0.19	BG	NYLON TIES 11in BLACK 100/BAG	12.55
	Y	320	BTN015	0.24	BG	TIES, NYLON 15in (100/BAG)	12.65
	Y	320	BTN015WR	0.52	BG	TIES, NYLON 15in BLACK (100/BAG)	13.65
	Y	320	BTN040CPK	0.03	BG	*DISCONTINUED* TIES, NYLON 4in (100/BAG)	
	Y	320	BTN055	0.72	BG	*DISCONTINUED* TIES, NYLON	33.60
	Y	320	BTN075	1.29	BG	TIES, NYLON 7-1/2in (1000/BAG)	39.25
	Y	320	BTN075WR	1.25	BG	TIES,NYLON 7-1/2inBLK (1000/BAG)	48.30
	Y	320	BTN075WRCPK	0.14	BG	TIES,NYLON 7-1/2inBLACK (100/BAG)	5.40
	Y	320	BTN145	0.98	BG	TIES, NYLON 14-1/2in (100/BAG)	20.30
	Y	320	BTN145WR	0.58	BG	TIES, NYLON 14-1/2inBLK (100/BAG)	22.35
	Y	320	BTN240	1.40	BG	NYLON TIES 24inBAG OF 50PCS	24.15
	Y	320	BTN300	0.83	BG	TIES, NYLON 30-34inBAG OF 50PCS	27.05
	N	220	BTS	7.60	EA	CONSOLE,TOWER FOR SINGLE LEVER	33.10
	N	484	BTS062012	0.09	EA	HINGE,BUTT,STL, .060X2X2X.125	2.40
	N	484	BTS072018	0.13	EA	HINGE,BUTT,STL, .075X2X2X.187	3.45
	N	484	BTS093018	0.28	EA	HINGE,BUTT,STL, .090X3X3X.187	6.40
	N	484	BTS123025	0.39	EA	HINGE,BUTT,STL, .120X3X3X.250	6.60
	N	484	BTS124025	0.69	EA	HINGE,BUTT,STL, .120X4X4X.250	6.95
	N	484	BTSS072018	0.13	EA	STBD HINGE,BUTT,SST,.075X2X2X.187	7.55
	N	484	BTSS093018	0.29	EA	stbd HINGE,BUTT,SST,.090X3X3X.187	12.30
	N	484	BTSS123025	0.40	EA	HINGE,BUTT,SST,.120X3X3X.250	15.80
	N	484	BTSS124025	0.64	EA	HINGE,BUTT,SST,.120X4X4X.250	21.10
	N	220	BTT	14.36	EA	CONSOLE,TOWER,TRIPLE LEVER	46.60
	N	220	BTTT52	11.50	EA	SHIFTER,PTO/HOIST/HOIST,TRIPLE	206.85
	N	220	BTTT62	11.50	EA	SHIFTER,PTO/HOIST/HOIST,TRIPLE	206.85
	N	649	BUC0P25	0.05	EA	FITTING,,UNION CONNECTOR DOT,	6.34
	N	649	BUC0P375	0.08	EA	FITTING,UNION CONNECTOR,DOT,	8.23
	N	649	BUT0P25	0.09	EA	FITTING,UNION TEE,DOT,PUSH-IN,	12.72
	N	649	BUT0P375	0.14	EA	FITTING,UNION TEE,DOT,PUSH-IN,	16.90
	Y	620	C1010	74.00	EA	PUMP,HYDRAULIC W/VALVE	536.00
	Y	130	C1010AS	76.34	EA	PUMP REMOTE W/AIR SHIFT	578.00
	Y	620	C1010DMCCW	71.00	EA	PUMP,DIRECT MOUNT HYDRAULIC	555.80
	Y	620	C1010DMCCWAS	77.00	EA	PUMP DIRECT MOUNT+AIR SHIFT CYL.	578.00
	Y	620	C1010DMCW	71.00	EA	PUMP DIRECT MOUNT HYDRAULIC	536.00
	Y	620	C1010DMCWAS	76.34	EA	PUMP DIRECT MOUNT+AIR SHIFT CYL.	578.00
	N	520	CB1	0.04	EA	ADAPTER,TERMINAL,CIRCUIT BREAKER,	1.96
	N	560	CB100PB	0.24	EA	CIRCUIT BREAKER,100AMP,PUSH-TO-TRIP,	35.95
	N	560	CB120PB	0.24	EA	CIRCUIT BREAKER,120AMP,PUSH-TO-TRIP,	35.95
	N	560	CB150	0.23	EA	CIRCUIT BREAKER,150 AMP,1/4in SST STUDS	35.95
	N	560	CB150PB	0.24	EA	CIRCUIT BREAKER,150AMP,PUSH-TO-TRIP,	35.95
	N	560	CB151	0.30	EA	CIRCUIT BREAKER, 150 AMP, AUTO RESET	39.95

Buyers Products Company * 9049 Tyler Blvd. * Mentor, OH 44060 *
*** F.O.B. Mentor, Ohio * $25.00 Minimum Order**

Price List in Effect on 12/1/2016 * For ALL Items in Catalogs * Marking NEW Pricing on Items Changed Since 11/1/2016

	N	560	CB151PB	0.30	EA	CIRCUIT BREAKER, 150 AMP, PUSH-TO-TRIP	39.95
	N	560	CB200PB	0.24	EA	CIRCUIT BREAKER,200AMP,PUSH-TO-TRIP,-	39.75
	N	560	CB201	0.30	EA	CIRCUIT BREAKER, 200 AMP, AUTO RESET	43.75
	N	560	CB201PB	0.33	EA	CIRCUIT BREAKER, 200 AMP,PUSH-TO-TRIP	43.75
	N	560	CB251PB	0.33	EA	CIRCUIT BREAKER,250 AMP,PUSH-TO-TRIP,	72.90
	N	560	CB30PB	0.24	EA	CIRCUIT BREAKER,30 AMP,PUSH-TO-TRIP,	35.95
	N	560	CB50PB	0.24	EA	CIRCUIT BREAKER,50 AMP,PUSH-TO-TRIP,	35.95
	N	560	CB60	0.23	EA	CIRCUIT BREAKER,60 AMP,AUTO RESET	35.95
	N	560	CB60PB	0.24	EA	CIRCUIT BREAKER,60 AMP,PUSH-TO-TRIP,	35.95
	N	560	CB80PB	0.25	EA	CIRCUIT BREAKER,80 AMP,PUSH-TO-TRIP,	35.95
	N	560	CB90PB	0.24	EA	CIRCUIT BREAKER,90 AMP,PUSH-TO-TRIP,	35.95
	N	548	CBTD41612	4.00	EA	TIE DOWN,CAM BUCKLE,4 PK,1inX6ft, (4/CS)	20.25
	Y	540	CC400	4.55	EA	CONDUIT CARRIER,KIT,FITS 4in	68.90
	Y	540	CC600	6.85	EA	CONDUIT CARRIER,KIT,FITS 6in	96.65
	Y	540	CC800	8.25	EA	CONDUIT CARRIER,KIT,FITS 8in SCH 40 PVC	117.99
	Y	552	CCD0714	40.50	EA	DOOR,INSPECTION,STEEL,7-1/4TX13-3/4W	291.28
	Y	552	CCD0714SS	35.00	EA	DOOR, INSP, SST, 7-14TX13-3/4W W/ DETENT	587.00
	Y	552	CCD1314	49.50	EA	DOOR,INSPECTION,STEEL,12-3/8TX13-1/2W,	315.28
	N	370	CDB01	0.01	EA	BUMPER,CABINET DOOR	0.40
	N	510	CDC01Z	0.04	EA	COVER,DUST,CYL,ZINC DIE CAST	2.20
	Y	620	CH101115	35.00	EA	PUMP VALVE COMBO REMOTE MOUNT	470.00
	Y	620	CH101120	38.00	EA	PUMP VALVE COMBO REMOTE MOUNT	470.00
	Y	620	CH102115CCW	35.00	EA	PUMP VALVE COMBO DIRECT MOUNT	470.00
	Y	620	CH102115CW	35.00	EA	PUMP VALVE COMBO DIRECT MOUNT	470.00
	Y	620	CH102120CCW	38.00	EA	PUMP VALVE COMBO DIRECT MOUNT	470.00
	Y	620	CH102120CW	42.42	EA	PUMP VALVE COMBO DIRECT MOUNT	470.00
	N	512	CL375	1.17	EA	CHAIN LATCH,FOR 3/8in CHAIN	5.70
	N	621	CM002P	13.22	EA	MOTOR,HYD, 2 BOLT 3.17 CIPR	277.40
	N	621	CM004P	12.74	EA	MOTOR,HYDRAULIC,4-BOLT, 3.17 CIPR	277.40
	N	621	CM012P	14.02	EA	MOTOR,HYD,2 BOLT 4.75 CIPR	283.20
	N	621	CM014P	13.80	EA	MOTOR,HYD, 4 BOLT 4.75 CIPR	283.20
	N	621	CM032P	14.28	EA	MOTOR,HYD, 2 BOLT 7.2 CIPR	297.85
	N	621	CM034P	13.37	EA	MOTOR,HYD,7.3 CIPR,4 BOLT	297.85
	N	621	CM042P	16.00	EA	MOTOR,HYD, 2 BOLT 9.5 CIPR	306.00
	N	621	CM044P	14.02	EA	MOTOR,HYD, 4 BOLT 9.5 CIPR	306.00
	N	621	CM052P	15.50	EA	MOTOR,HYD, 2 BOLT 11.6 CIPR	313.80
	N	621	CM054P	14.27	EA	MOTOR,HYD, 4 BOLT 11.6 CIPR	313.80

Buyers Products Company * 9049 Tyler Blvd. * Mentor, OH 44060 *
*** F.O.B. Mentor, Ohio * $25.00 Minimum Order**

Price List in Effect on 12/1/2016 * For ALL Items in Catalogs * Marking NEW Pricing on Items Changed Since 11/1/2016

	N	621	CM062P	16.00	EA	MOTOR,HYD, 2 BOLT 14.1 CIPR	323.65
	N	621	CM072P	16.32	EA	MOTOR,HYD, 2 BOLT 19 CIPR	331.94
	N	621	CM074P	15.54	EA	MOTOR,HYDRAULIC,4-BOLT, 19 CIPR	331.95
	N	621	CM082P	14.87	EA	MOTOR,HYD, 2 BOLT 23.6 CIPR	339.80
	N	621	CM084P	16.50	EA	MOTOR,HYD, AUGER 4 BOLT 23.6 CIPR	339.80
	N	621	CM092P	23.17	EA	MOTOR,2 BOLT,24.9 CU IN, REPLACES WHITE	359.00
	N	635	CP56	1.49	EA	PLATE,COVER FOR CPA56 ASSY	14.30
	N	635	CPA56	2.88	EA	PLATE,COVER,ASSY FOR HFA5 HFA6	38.55
	N	520	CT150RW	1.50	EA	CONSPICUITY TAPE,2in X 150 ft ROLL	200.00
	N	520	CT150W12	1.50	EA	*DISCONTINUED* CONSPICUITY TAPE,2in X	
	N	370	D210	0.98	EA	BUMPER 2x2x10 W/2 HOLES	6.10
	N	370	D2120	13.00	EA	BUMPER 2x2x120 W/NO HOLES	71.20
	N	370	D232	3.42	EA	BUMPER 2x2x32 W/3 HOLES	19.55
	N	370	D26U	0.60	EA	BUMPER, 80 DUR NITRILE,	6.10
	N	370	D312	3.30	EA	BUMPER 3x3x12 W/2 HOLES	17.20
	N	370	D324	5.42	EA	BUMPER 3x3x24 W/4 HOLES	33.50
	N	370	D412	3.09	EA	BUMPER 4x4x12 W/2 HOLES	22.80
	N	370	D424	8.11	EA	BUMPER 4x4x24 W/3 HOLES	42.95
	N	370	D46	1.25	EA	BUMPER 4x4x6 W/2 HOLES	12.95
	Y	555	DBV2500	41.00	EA	VIBRATOR KIT,DUMP BODY,2500#,W/INSTALL	773.70
	Y	555	DBV3500	62.92	EA	VIBRATOR KIT,DUMP BODY,3500# ,W/INSTALL	797.70
	N	514	DH300	0.30	EA	HOLD BACK ,DOOR 2in HOOK&KEEPER ALUMINUM	6.90
	N	514	DH304	0.29	EA	HOLD BACK ,DOOR 4in HOOK&KEEPER ALUMINUM	7.50
	N	514	DH500	0.50	EA	HOLD BACK ,DOOR 4in HOOK & KEEPER	3.70
	N	514	DH5006	0.39	EA	HOLD BACK ,DOOR 6in HOOK & KEEPER	3.70
	N	514	DH5006SS	0.38	EA	HOLD BACK ,DOOR 6in HOOK & KEEPER STAIN-	8.25
	N	514	DH500SS	0.36	EA	HOLD BACK,DOOR 4in HOOK & KEEPER STAIN-	7.35
	N	514	DH501	0.25	EA	HOOK ONLY,4in, FOR DOOR HOLD BACK DH500	1.95
	N	514	DH502	0.25	EA	KEEPER ONLY,DOOR HOLD BACK	1.70
	Y	440	DKE14JSQ	2.50	EA	ADJ. BEARING HANGER, 7/8in SQ	39.80
	N	648	DLFK50CCW	390.00	EA	WETLINE KIT,DUAL PRESSURE,50 GALLON	3,343.50
	N	648	DLFK50CCW24	390.00	EA	WETLINE KIT,DUAL PRESSURE,50 GALLON	3,343.50
	N	648	DLFK50CCWSM	379.00	EA	WETLINE KIT,DUAL PRESSURE,W/SIDE MNT 50	3,115.10
	N	648	DLFK70CCW	430.00	EA	WETLINE KIT,DUAL LIVE FLOOR,70 GALLON	3,394.00
	N	880	DM0212BF	0.33	EA	MAT,DRY,FEMALE EDGE,2in X 12in	6.00
	N	880	DM0212BM	0.35	EA	MAT,DRY,MALE EDGE,2in X 12in	6.00
	N	880	DM0214BMC	0.50	EA	MAT,DRY,MALE CORNER,2in X 14in	6.90
	N	880	DM1212B	1.42	EA	MAT,DRY TILE,12in X 12in	9.98

Buyers Products Company * 9049 Tyler Blvd. * Mentor, OH 44060 *
*** F.O.B. Mentor, Ohio * $25.00 Minimum Order**

Price List in Effect on 12/1/2016 * For ALL Items in Catalogs * Marking NEW Pricing on Items Changed Since 11/1/2016

	N	514	DP100	1.10	EA	TELESCOPING DOOR AND LID PROP	12.80
	N	514	DP102	0.87	EA	TELESCOPING DOOR AND LID PROP	11.40
	N	554-3	DTB102	14.00	EA	RETENTION BOW KIT DUMP TARP	110.50
	N	554-3	DTB96	11.47	EA	RETENTION BOW KIT, 96in	84.50
	N	554-3	DTB98A	8.00	EA	RETENTION BOW KIT,AL,98in W/END COLLARS,	68.90
	Y	554	DTG	30.10	EA	TARP ROLLER KIT, W/GRND CNTL (LESS TARP)	334.85
	Y	554	DTR	19.25	EA	TARP ROLLER KIT (LESS TARP)	202.90
	Y	554	DTR1	16.25	EA	TARP ROLLER KIT, FOR PRE-DRILLED BODY	202.90
	Y	554	DTR4510	23.00	EA	TARP ROLLER KIT,DUMP,4.6ft X 10ft	255.36
	Y	554	DTR5012	24.75	EA	TARP ROLLER KIT,DUMP,5ft X12ft,BLK MESH	254.02
	Y	554	DTR5014	25.00	EA	TARP ROLLER KIT,DUMP,5ft X 14ft	254.90
	Y	554	DTR5508	24.00	EA	TARP ROLLER KIT,DUMP,5.4ft X 9.5ft	249.67
	Y	554	DTR5511	25.00	EA	TARP ROLLER KIT,DUMP,5.4ft X 11.5ft	267.44
	Y	554	DTR5514	31.75	EA	TARP ROLLER KIT,DUMP,5.5ftX14ft,BLK MESH	278.12
	Y	554	DTR6014	26.75	EA	TARP ROLLER KIT,DUMP,6ft X 14ft,BLK MESH	278.76
	Y	554	DTR6515	29.00	EA	TARP ROLLER KIT,DUMP,6.5ftX15ft BLK MESH	294.13
	Y	554	DTR6518	28.50	EA	TARP ROLLER KIT,DUMP,6.5ftX18ft BLK MESH	309.33
	Y	554	DTR7012	26.55	EA	TARP ROLLER KIT,DUMP,7ft X 12ft	284.61
	Y	554	DTR7015	31.50	EA	TARP ROLLER KIT,DUMP,7ft X 15ft,BLK MESH	299.80
	Y	554	DTR7015S	36.50	EA	TARP ROLLER KIT,DUMP,7.0ftX15ft,BLKSOLID	334.09
	Y	554	DTR7018	33.00	EA	TARP ROLLER KIT,DUMP,7ft X 18ft,BLK MESH	312.40
	Y	554	DTR7018S	40.50	EA	TARP ROLLER KIT,DUMP,7.0ftX18ft,BLKSOLID	357.25
	Y	554	DTR7020	35.00	EA	TARP ROLLER KIT,DUMP,7ft X 20ft,BLK MESH	322.22
	Y	554	DTR7021S	43.50	EA	TARP ROLLER KIT,DUMP,7.0ftX21ft,BLKSOLID	386.34
	Y	554	DTR7022	35.00	EA	TARP ROLLER KIT,DUMP,7ftX22ft,BLK MESH	356.53
	Y	554	DTR7512	29.50	EA	TARP ROLLER KIT,DUMP,7.5ft X 12ft	298.70
	Y	554	DTR7515	31.50	EA	TARP ROLLER KIT,DUMP,7.5ftX15ft,BLK MESH	305.38
	Y	554	DTR7515S	38.00	EA	TARP ROLLER KIT,DUMP,7.5ftX15ft,BLKSOLID	345.18
	Y	554	DTR7518	32.50	EA	TARP ROLLER KIT,DUMP,7.5ftX18ft,BLK MESH	317.77
	Y	554	DTR7520	36.00	EA	TARP ROLLER KIT,DUMP,7.5ftX20ft,BLK MESH	333.65
	Y	554	DTR7520S	42.50	EA	TARP ROLLER KIT,DUMP,7.5ftX20ft,BLKSOLID	371.93
	Y	554	DTR8018	35.70	EA	TARP ROLLER KIT,DUMP,8ftX18ft,BLK MESH	359.90

Buyers Products Company * 9049 Tyler Blvd. * Mentor, OH 44060 *
*** F.O.B. Mentor, Ohio * $25.00 Minimum Order**

Price List in Effect on 12/1/2016 * For ALL Items in Catalogs * Marking NEW Pricing on Items Changed Since 11/1/2016

	Y	554	DTR8022	36.50	EA	TARP ROLLER KIT,DUMP,8ftX22ft,BLK MESH	363.30
	N	630	E22	0.61	EA	SENSOR,OIL LEVEL KIT	59.75
	N	630	E32	0.65	EA	SENSOR,OIL LEVEL KIT W/SLOSH BUCKET	76.90
	N	700	EH02CL	2.00	EA	STBD EYE HOOK,FORGED,2 TON,WLL 4,000#	11.85
	N	624	F1200S	1.10	EA	FLOW CONTROL VALVE 3/4in STEEL	114.00
	N	624	F1200SAE	2.33	EA	FLOW CONTROL VALVE No.12 ORB	114.00
	N	624	F400B	0.48	EA	VALVE, FLOW CONTROL BRASS 1/4in	34.35
	N	624	F400S	1.07	EA	VALVE, FLOW CONTROL 1/4in STEEL	42.00
	N	624	F400SAE	1.90	EA	FLOW CONTROL VALVE No.4 ORB	42.00
	N	624	F600S	0.79	EA	VALVE, FLOW CONTROL 3/8in STEEL	51.92
	N	624	F600SAE	1.10	EA	FLOW CONTROL VALVE No.6 ORB	51.90
	N	624	F800S	2.40	EA	VALVE, FLOW CONTROL 1/2in STEEL	70.00
	N	624	F800SAE	2.46	EA	FLOW CONTROL VALVE No.8 ORB	70.00
	N	629	FA025	0.04	EA	FLANGE, ALUM WELD 1/4in NPT	3.30
	N	629	FA038	0.04	EA	FLANGE, ALUM WELD 3/8in NPT	3.30
	N	629	FA050	0.04	EA	FLANGE, ALUM WELD 1/2in NPT	3.30
	N	629	FA075	0.07	EA	FLANGE, ALUM WELD 3/4in NPT	4.80
	N	629	FA100	0.07	EA	FLANGE, ALUM WELD 1in NPT	4.80
	N	629	FA125	0.08	EA	FLANGE, ALUM WELD 1 1/4in NPT	9.10
	N	629	FA150	0.10	EA	FLANGE, ALUM WELD 1 1/2in NPT	10.45
	N	629	FA200	0.12	EA	FLANGE,2in NPT STAMPED ALUMINUM	16.75
	N	494	FBP050	0.04	EA	STBD HINGE,WELD-ON,STEEL WITH BRASS	2.26
	N	494	FBP060	0.08	EA	STBD HINGE,WELD-ON,STEEL WITH BRASS	2.48
	N	494	FBP070	0.13	EA	STBD HINGE,WELD-ON,STEEL WITH BRASS	3.17
	N	494	FBP080	0.19	EA	HINGE,WELD-ON,STEEL WITH BRASS	3.38
	N	494	FBP080GF	0.19	EA	HINGE,WELD-ON,STL W/BRASS PIN,	3.10
	N	494	FBP100	0.37	EA	HINGE,WELD-ON,STEEL WITH BRASS	4.88
	N	494	FBP100GF	0.35	EA	HINGE,WELD-ON,STL W/BRASS PIN,	5.90
	N	494	FBP120GF	0.43	EA	HINGE,WELD-ON,STL W/BRASS PIN,	6.40
	N	494	FBP150	0.88	EA	HINGE,WELD-ON,STEEL WITH BRASS	10.92
	N	494	FBP150GF	0.87	EA	HINGE,WELD-ON,STL W/BRASS PIN,	11.78
	N	629	FDF012	0.10	EA	FLANGE, FORGED WELD 1/8inNPT	3.82
	N	629	FDF025	0.09	EA	FLANGE, FORGED WELD 1/4in NPT	3.94
	N	629	FDF038	0.07	EA	FLANGE, FORGED WELD 3/8in NPT	4.08
	N	629	FDF050	0.12	EA	FLANGE, FORGED WELD 1/2in NPT	4.12
	N	629	FDF075	0.19	EA	FLANGE, FORGED WELD 3/4in NPT	4.24
	N	629	FDF100	0.34	EA	FLANGE, FORGED WELD 1in NPT	4.88
	N	629	FDF125	0.33	EA	FLANGE, FORGED WELD 1-1/4in NPT	5.80
	N	629	FDF150	0.37	EA	FLANGE, FORGED WELD 1 1/2in NPT	6.60
	N	629	FDF200	0.51	EA	FLANGE, FORGED WELD 2in NPT	7.70
	N	629	FDF250	1.10	EA	FLANGE, FORGED WELD 2 1/2inNPT	11.82
	N	629	FDF300	1.26	EA	FLANGE, FORGED WELD 3in NPT	13.98
	N	629	FDF400	2.12	EA	FLANGE, FORGED WELD 4in NPT	32.05
	N	644	FF0606	0.70	EA	COUPLER, QUICK HYD FLUSH FEM.	64.12
	N	644	FF0608	0.67	EA	COUPLER, QUICK HYD. FLUSH FEM.	60.34

Buyers Products Company * 9049 Tyler Blvd. * Mentor, OH 44060 *
*** F.O.B. Mentor, Ohio * $25.00 Minimum Order**

Price List in Effect on 12/1/2016 * For ALL Items in Catalogs * Marking NEW Pricing on Items Changed Since 11/1/2016

	N	644	FF0808	1.19	EA	COUPLER, QUICK HYD FLUSH FEM.	85.20
	N	644	FF0812	1.13	EA	COUPLER, QUICK HYD FLUSH FEM.	85.20
	N	644	FF08FC	0.06	EA	DUST CAPS FOR COUPLER HALF 1/2	7.75
	N	644	FF08MC	0.06	EA	DUST CAP FOR PLUG 1/2in	7.74
	N	520	FFD625SS	1.00	EA	DISH,6-1/4in, FUEL FILLER,SST,42 DEGREE	23.70
	N	520	FFD626SS	0.56	EA	DISH,6-1/4in,FUEL FILLER,SST,21 DEGREE	23.70
	N	635	FH000	0.58	EA	FILTER HEAD NO. 6 SAE PORTS NO	10.05
	N	635	FH001	0.58	EA	FILTER HEAD,3/8in N.P.T. PORTS NO BYPASS	10.05
	N	635	FH115	0.58	EA	FILTER HEAD 3/4inNPT 15 PSI BYP	20.90
	N	635	FH125	0.58	EA	FILTER HEAD 3/4inPORTS 25 PSI BYPASS BPC	20.90
	N	635	FH215	1.71	EA	FILTER HEAD 1 1/4inNPT SINGLE	31.50
	N	635	FH225	1.81	EA	FILTER HEAD 1 1/4inNPT SINGLE	31.50
	N	635	FH315	2.31	EA	FILTER HEAD 1 1/2inNPT OVER/	93.50
	N	635	FH325	2.31	EA	FILTER HEAD 1 1/2inNPT OVER/	93.50
	N	635	FH415	5.28	EA	FILTER HEAD 1 1/2inNPT/2inSAE	192.10
	N	635	FH425	5.59	EA	FILTER HEAD 1 1/2inNPT/2inSAE	192.10
	N	635	FH625	0.58	EA	FILTER HEAD 1/2inPORTS 25 PSI BYPASS,BPC	19.90
	N	635	FH715	0.81	EA	FILTER HEAD,1in NPT 15 PSI BYPASSW/1/8in	22.50
	N	635	FH725	0.81	EA	FILTER HEAD,1in NPT 25 PSI BY PASS W/	22.50
	N	644	FM0606	0.42	EA	COUPLER, QUICK HYD FLUSH MALE	25.85
	N	644	FM0608	0.39	EA	COUPLER, QUICK HYD FLUSH MALE	25.90
	N	644	FM0808	0.72	EA	COUPLER, QUICK HYD FLUSH MALE	46.60
	N	644	FM0812	0.67	EA	COUPLER, QUICK HYD FLUSH MALE	46.60
	N	644	FM08S12	0.64	EA	STBD COUPLER, QUICK HYD FLUSH MALE	45.75
	N	638	FMR8S	60.50	EA	RESERVOIR,FRAME MOUNT,8 GALLON STEEL	324.95
	N	638	FMR8S3W	73.58	EA	RESERVOIR,W/VALVE(DUMP BED POWER UP,	507.25
	N	638	FMR8S3WPB	74.50	EA	RESERVOIR,W/VALVE(DUMP BED POWER UP,	533.60
	N	638	FMR8S4W	75.74	EA	RESERVOIR,W/VALVE(DUMP BED POWER UP,	540.00
	N	638	FMR8S4WPB	75.54	EA	RESERVOIR,W/VALVE(DUMP BED POWER UP,	588.84
	N	295	FNE031018034	0.01	EA	NUT, ELASTIC STOP 5/16-18 ZN	0.10
	N	570	FRL12150	5.30	EA	FILTER,REGULATOR,LUBRICATOR,PNEUMATIC	119.80
	N	629	FS012	0.09	EA	FLANGE,STEEL,1/8inNPT,WELD TYPE	2.10
	N	629	FS025	0.09	EA	FLANGE,STEEL,1/4inNPT,WELD TYPE	2.25
	N	629	FS038	0.09	EA	FLANGE,STEEL,3/8inNPT,WELD TYPE	2.25
	N	629	FS050	0.09	EA	FLANGE,STEEL,1/2inNPT,WELD TYPE	2.25
	N	629	FS075	0.15	EA	FLANGE,STEEL,3/4inNPT,WELD TYPE	3.30
	N	629	FS100	0.15	EA	FLANGE,STEEL,1inNPT,WELD TYPE	3.40
	N	629	FS125	0.18	EA	FLANGE,STEEL,1.25inNPT,WELDTYPE	3.70

Buyers Products Company * 9049 Tyler Blvd. * Mentor, OH 44060 *
*** F.O.B. Mentor, Ohio * $25.00 Minimum Order**

Price List in Effect on 12/1/2016 * For ALL Items in Catalogs * Marking NEW Pricing on Items Changed Since 11/1/2016

	N	629	FS150	0.30	EA	FLANGE,STEEL,1.50inNPT,WELDTYPE	4.60
	N	629	FS200	0.30	EA	FLANGE,STEEL,2inNPT,WELD TYPE	5.10
	N	523	FS2797CH	4.96	EA	FOLDING STEP W/PLASTIC GASKET,	79.00
	N	494	FSP050	0.04	EA	HINGE,WELD-ON,STEEL WITH STEEL	2.02
	N	494	FSP060	0.08	EA	STBD HINGE,WELD-ON,STEEL WITH STEEL	2.26
	N	494	FSP070	0.13	EA	HINGE,WELD-ON,STEEL WITH STEEL	2.91
	N	494	FSP080	0.19	EA	HINGE,WELD-ON,STEEL WITH STEEL	3.17
	N	494	FSP100	0.35	EA	HINGE,WELD-ON,STEEL WITH STEEL	3.30
	N	494	FSP120	0.44	EA	HINGE,WELD-ON,STEEL WITH STEEL	3.78
	N	494	FSP150	0.85	EA	HINGE,WELD-ON,STEEL WITH STEEL	6.96
	N	494	FSP200	1.50	EA	HINGE,WELD-ON,STEEL WITH STEEL	11.15
	N	494	FSP260	2.93	EA	HINGE,WELD-ON,STEEL WITH STEEL	16.80
	N	494	FSS070	0.13	EA	HINGE,WELD-ON,STAINLESS STEEL	12.33
	N	494	FSS100	0.35	EA	HINGE,WELD-ON,STAINLESS STEEL	24.93
	N	629	FSSW025	0.08	EA	FLANGE,SST WELD TYPE1/4NPT,.134 THK	8.18
	N	629	FSSW038	0.08	EA	FLANGE,SST WELD TYPE 3/8NPT,.134 THK	10.00
	N	629	FSSW050	0.09	EA	FLANGE,SST WELD TYPE 1/2 NPT,.134 THK	8.55
	N	629	FSSW075	0.09	EA	FLANGE,SST WELD TYPE 3/4NPT,.134 THK	12.50
	N	629	FSSW100	0.10	EA	FLANGE,SST WELD,TYPE 1 NPT,.134 THK	14.94
	N	629	FSSW125	0.11	EA	FLANGE,SST WELD TYPE,1-1/4 NPT,.134 THK	24.02
	N	629	FSSW150	0.11	EA	FLANGE,SST WELD TYPE 1-1/2 NPT .134 THK	31.50
	N	546	FWD24	3.80	EA	FIFTH WHEEL DISC,24inX.185in THK(5PC/BX)	20.25
	N	546	FWD32	5.11	EA	FIFTH WHEEL DISC,32inX.185in THK(5PC/BX)	29.98
	N	546	FWD36	6.51	EA	FIFTH WHEEL DISC,36inX.185in THK(5PC/BX)	34.85
	N	546	FWRC	0.11	EA	CLIP, FIFTH WHEEL RETENSION, HARDENED	4.85
	N	546	G9003	34.00	EA	GOOSENECK-RETRACTABLE 2-5/16in	165.60
	N	546	G9003UBK	36.30	EA	GOOSENECK-RETRABL,G9003,2-5/16in	177.50
	N	546	G9542	66.00	EA	GOOSENECK-42in STEEL PLATE	181.60
	N	902	GPS1	0.69	EA	GPS UNIT W/CONVERTER & CONNECTOR	659.00
	N	230	H101CK	2.38	EA	PUMP CONNECTION KIT FOR H101	31.05
	N	230	H102CKCCW	2.48	EA	CONNECTION KIT FOR H102CCW	31.05
	N	230	H102CKCW	2.32	EA	CONNECTION KIT FOR H102CW	31.05
	Y	620	H2136101	29.92	EA	PUMP,HYDRAULIC 2/4 BOLT 7/8-13	378.00
	Y	620	H2136121	30.30	EA	PUMP,HYDRAULIC 2/4 BOLT 7/8-13	336.00
	Y	620	H2136151	31.80	EA	PUMP,HYDRAULIC 2/4 BOLT 7/8-13	357.00
	Y	620	H2136153	33.00	EA	PUMP,HYDRAULIC 2/4 BOLT 1in KEYED	357.00
	Y	620	H2136171	37.00	EA	PUMP,HYDRAULIC 2/4 BOLT 7/8-13	357.00
	Y	620	H2136173	34.15	EA	PUMP,HYDRAULIC 2/4 BOLT 1in KEYED	357.00
	Y	620	H2136201	36.38	EA	PUMP,HYDRAULIC 2/4 BOLT 7/8-13	416.00
	Y	620	H2136203	34.33	EA	PUMP,HYDRAULIC 2/4 BOLT 1in KEYED	357.00

Buyers Products Company * 9049 Tyler Blvd. * Mentor, OH 44060 *
*** F.O.B. Mentor, Ohio * $25.00 Minimum Order**

Price List in Effect on 12/1/2016 * For ALL Items in Catalogs * Marking NEW Pricing on Items Changed Since 11/1/2016

	N	484	H2550	0.94	EA	HINGE,BUTT,FLUSH MNT,STEEL,	5.20
	Y	010	H3013X013	2.30	EA	UNIVERSAL JOINTH3std 3/4R 3/16 kw X	35.86
	N	627	H3069X12	0.24	EA	CONNECTOR, MALE NPT TO MALE NPT	3.43
	N	627	H3069X12X8	0.23	EA	CONNECTOR, MALE NPT TO MALE NPT	3.45
	N	627	H3069X16	0.39	EA	CONNECTOR, MALE NPT TO MALE NPT	5.20
	N	627	H3069X2	0.03	EA	CONNECTOR, MALE NPT TO MALE NPT	1.30
	N	627	H3069X20	0.61	EA	CONNECTOR, MALE NPT TO MALE NPT	11.40
	N	627	H3069X4	0.07	EA	CONNECTOR, MALE NPT TO MALE NPT	1.15
	N	627	H3069X4X2	0.05	EA	CONNECTOR, MALE NPT TO MALE NPT	1.53
	N	627	H3069X6	0.09	EA	CONNECTOR, MALE NPT TO MALE NPT	1.51
	N	627	H3069X6X4	0.09	EA	CONNECTOR, MALE NPT TO MALE NPT	1.85
	N	627	H3069X8	0.16	EA	CONNECTOR, MALE NPT TO MALE NPT	2.35
	N	627	H3069X8X4	0.17	EA	CONNECTOR, MALE NPT TO MALE NPT	2.90
	N	627	H3069X8X6	0.15	EA	CONNECTOR, MALE NPT TO MALE NPT	2.49
	N	627	H3109X12X4	0.18	EA	BUSHING, REDUCER MALE NPT TO FEM NPT	2.85
	N	627	H3109X12X6	0.14	EA	BUSHING, REDUCER MALE NPT TO FEM NPT	2.90
	N	627	H3109X12X8	0.10	EA	BUSHING, REDUCER MALE NPT TO FEM NPT	5.15
	N	627	H3109X16X12	0.17	EA	BUSHING, REDUCER MALE NPT TO FEM NPT	5.00
	N	627	H3109X16X6	0.35	EA	BUSHING, REDUCER MALE NPT TO FEM NPT	4.72
	N	627	H3109X16X8	0.26	EA	BUSHING, REDUCER MALE NPT TO FEM NPT	4.75
	N	627	H3109X20X12	0.45	EA	BUSHING, REDUCER MALE NPT TO FEM NPT	8.50
	N	627	H3109X20X16	0.45	EA	BUSHING, REDUCER MALE NPT TO FEM NPT	9.15
	N	627	H3109X24X20	0.50	EA	BUSHING, REDUCER MALE NPT TO FEM NPT	15.60
	N	627	H3109X4X2	0.03	EA	BUSHING, REDUCER MALE NPT TO FEM NPT	1.40
	N	627	H3109X6X2	0.04	EA	BUSHING, REDUCER MALE NPT TO FEM NPT	1.55
	N	627	H3109X6X4	0.03	EA	BUSHING, REDUCER MALE NPT TO FEM NPT	1.44
	N	627	H3109X8X2	0.03	EA	BUSHING, REDUCER MALE NPT TO FEM NPT	2.00
	N	627	H3109X8X4	0.09	EA	BUSHING, REDUCER MALE NPT TO FEM NPT	1.85
	N	627	H3109X8X6	0.07	EA	BUSHING, REDUCER MALE NPT TO FEM NPT	2.00
	N	627	H3159X12	0.24	EA	PLUG, HEX HEAD 3/4	2.66
	N	627	H3159X16	0.36	EA	PLUG, HEX HEAD 1in	4.45
	N	627	H3159X2	0.03	EA	PLUG, HEX HEAD 1/8	0.30
	N	627	H3159X4	0.04	EA	PLUG, HEX HEAD 1/4	0.64
	N	627	H3159X6	0.08	EA	PLUG, HEX HEAD 3/8	0.70
	N	627	H3159X8	0.14	EA	PLUG, HEX HEAD 1/2	1.15
	N	627	H3169X2	0.02	EA	PLUG, HEX SOCKET 1/8	0.25
	N	627	H3169X4	0.03	EA	PLUG, HEX SOCKET 1/4	0.30
	N	627	H3179X12	0.18	EA	PLUG, SQ.HEAD 3/4	1.30

Buyers Products Company * 9049 Tyler Blvd. * Mentor, OH 44060 *
*** F.O.B. Mentor, Ohio * $25.00 Minimum Order**

Price List in Effect on 12/1/2016 * For ALL Items in Catalogs * Marking NEW Pricing on Items Changed Since 11/1/2016

	N	627	H3179X16	0.33	EA	PLUG, SQ.HEAD 1in	5.10
	N	627	H3179X2	0.02	EA	PLUG, SQ.HEAD 1/8	0.35
	N	627	H3179X4	0.04	EA	PLUG, SQ.HEAD 1/4	0.36
	N	627	H3179X6	0.07	EA	PLUG, SQ.HEAD 3/8	0.46
	N	627	H3179X8	0.12	EA	PLUG, SQ.HEAD 1/2	0.82
	N	627	H3209X12X8	0.39	EA	ADAPTER, EXTENDER 3/4in X 1/2in	6.75
	N	627	H3209X16X12	0.59	EA	ADAPTER, EXTENDER 1in X 3/4in	9.42
	N	627	H3209X8X4	0.24	EA	ADAPTER, EXTENDER 1/2in X 1/4in	4.00
	N	627	H3209X8X6	0.24	EA	ADAPTER, EXTENDER 1/2in X 3/8in	3.99
	N	627	H3269X10X12	0.38	EA	CONNECTOR, MALE STR THRD TO FEM NPT	6.97
	N	627	H3269X10X4	0.12	EA	CONNECTOR, MALE STR THRD TO FEM NPT	3.92
	N	627	H3269X10X6	0.28	EA	CONNECTOR, MALE STR THRD TO FEM NPT	4.27
	N	627	H3269X10X8	0.24	EA	CONNECTOR, MALE STR THRD TO FEM NPT	3.99
	N	627	H3269X12X12	0.33	EA	CONNECTOR, MALE STR THRD TO FEM NPT	7.95
	N	627	H3269X12X8	0.25	EA	CONNECTOR, MALE STR THRD TO FEM NPT	5.00
	N	627	H3269X16X12	0.40	EA	CONNECTOR, MALE STR THRD TO FEM NPT	6.58
	N	627	H3269X16X16	0.53	EA	CONNECTOR, MALE STR THRD TO FEM NPT	8.32
	N	627	H3269X16X8	0.51	EA	CONNECTOR, MALE STR THRD TO FEM NPT	8.43
	N	627	H3269X20X16	0.32	EA	CONNECTOR, MALE STR THRD TO FEM NPT	11.55
	N	627	H3269X20X20	0.83	EA	CONNECTOR, MALE STR THRD TO FEM NPT	13.40
	N	627	H3269X6X4	0.09	EA	CONNECTOR, MALE STR THRD TO FEM NPT	2.60
	N	627	H3269X6X6	0.09	EA	CONNECTOR, MALE STR THRD TO FEM NPT	2.53
	N	627	H3269X8X4	0.13	EA	CONNECTOR, MALE STR THRD TO FEM NPT	3.01
	N	627	H3269X8X6	0.12	EA	CONNECTOR, MALE STR THRD TO FEM NPT	3.19
	N	627	H3269X8X8	0.22	EA	CONNECTOR, MALE STR THRD TO FEM NPT	3.80
	Y	010	H3293X282	2.30	EA	H3 1R 1/4 KW X 7/8 HEX	35.96
	N	627	H3309X12	0.32	EA	CONNECTOR, FEM NPT TO FEM NPT	5.21
	N	627	H3309X16	0.50	EA	CONNECTOR, FEM NPT TO FEM NPT	8.12
	N	627	H3309X2	0.04	EA	CONNECTOR, FEM NPT TO FEM NPT	1.68
	N	627	H3309X4	0.08	EA	CONNECTOR, FEM NPT TO FEM NPT	2.10
	N	627	H3309X6	0.09	EA	CONNECTOR, FEM NPT TO FEM NPT	2.25
	N	627	H3309X6X4	0.11	EA	CONNECTOR, FEM NPT TO FEM NPT	2.77
	N	627	H3309X8	0.23	EA	CONNECTOR, FEM NPT TO FEM NPT	3.14
	N	627	H3309X8X6	0.25	EA	CONNECTOR, FEM NPT TO FEM NPT	3.57
	N	627	H3359X12	0.42	EA	ELBOW, 45 DEGREE STREET 3/4in	8.85
	N	627	H3359X16	0.78	EA	ELBOW, 45 DEGREE STREET 1in	14.83
	N	627	H3359X2	0.07	EA	ELBOW, 45 DEGREE STREET 1/8in	2.80

Buyers Products Company * 9049 Tyler Blvd. * Mentor, OH 44060 *
*** F.O.B. Mentor, Ohio * $25.00 Minimum Order**

Price List in Effect on 12/1/2016 * For ALL Items in Catalogs * Marking NEW Pricing on Items Changed Since 11/1/2016

	N	627	H3359X4	0.12	EA	ELBOW, 45 DEGREE STREET 1/4in	3.93
	N	627	H3359X6	0.17	EA	ELBOW, 45 DEGREE STREET 3/8in	4.76
	N	627	H3359X8	0.33	EA	ELBOW, 45 DEGREE STREET 1/2in	6.20
	Y	010	H3393X393	2.30	EA	H3 1R 1/4 KW X 1R 1/4 KW	35.86
	N	627	H3409X12	0.60	EA	ELBOW, 90 DEG MALE NPT TO FEM NPT	9.65
	N	627	H3409X16	1.28	EA	ELBOW, 90 DEG MALE NPT TO FEM NPT	15.60
	N	627	H3409X2	0.10	EA	ELBOW, 90 DEG MALE NPT TO FEM NPT	2.74
	N	627	H3409X20	1.89	EA	ELBOW, 90 DEG MALE NPT TO FEM NPT	27.34
	N	627	H3409X4	0.18	EA	ELBOW, 90 DEG MALE NPT TO FEM NPT	3.80
	N	627	H3409X6	0.22	EA	ELBOW, 90 DEG MALE NPT TO FEM NPT	4.47
	N	627	H3409X8	0.50	EA	ELBOW, 90 DEG MALE NPT TO FEM NPT	6.60
	N	627	H3509X12	0.73	EA	ELBOW, 90 DEG FEM NPT TO FEM NPT	10.00
	N	627	H3509X16	1.27	EA	ELBOW, 90 DEG FEM NPT TO FEM NPT	15.50
	N	627	H3509X2	0.10	EA	ELBOW, 90 DEG FEM NPT TO FEM NPT	3.75
	N	627	H3509X20	1.70	EA	ELBOW, 90 DEG FEM NPT TO FEM NPT	28.41
	N	627	H3509X4	0.17	EA	ELBOW, 90 DEG FEM NPT TO FEM NPT	4.05
	N	627	H3509X6	0.20	EA	ELBOW, 90 DEG FEM NPT TO FEM NPT	4.72
	N	627	H3509X8	0.45	EA	ELBOW, 90 DEG FEM NPT TO FEM NPT	6.71
	N	627	H3529X12	0.49	EA	ELBOW,90 DEG MALE NPT TO MALE NPT	7.69
	N	627	H3529X16	0.90	EA	ELBOW,90 DEG MALE NPT TO MALE NPT	11.56
	N	627	H3529X4	0.12	EA	ELBOW,90 DEG MALE NPT TO MALE NPT	2.72
	N	627	H3529X6	0.22	EA	ELBOW,90 DEG MALE NPT TO MALE NPT	3.40
	N	627	H3529X8	0.32	EA	ELBOW,90 DEG MALE NPT TO MALE NPT	4.69
	N	627	H3559X12	0.49	EA	ELBOW, 45 DEGREE 3/4in	12.00
	N	627	H3609X12	0.96	EA	TEE, MALE BRANCH 3/4in	15.65
	N	627	H3609X4	0.32	EA	TEE, MALE BRANCH 1/4in	5.92
	N	627	H3609X8	0.45	EA	TEE, MALE BRANCH 1/2in	11.42
	N	627	H3709X12	0.79	EA	TEE, FEM NPT TO FEM NPT TO FEM NPT	16.20
	N	627	H3709X16	1.22	EA	TEE, FEM NPT TO FEM NPT TO FEM NPT	22.30
	N	627	H3709X2	0.10	EA	TEE, FEM NPT TO FEM NPT TO FEM NPT	4.76
	N	627	H3709X20	1.70	EA	TEE, FEM NPT TO FEM NPT TO FEM NPT	37.87
	N	627	H3709X4	0.17	EA	TEE, FEM NPT TO FEM NPT TO FEM NPT	5.59
	N	627	H3709X6	0.27	EA	TEE, FEM NPT TO FEM NPT TO FEM NPT	6.80
	N	627	H3709X8	0.55	EA	TEE, FEM NPT TO FEM NPT TO FEM NPT	10.45
	N	627	H3759X12	0.95	EA	TEE, MALE RUN 3/4in	14.83
	N	627	H3759X16	1.27	EA	TEE, MALE RUN 1in	25.62
	N	627	H3759X4	0.22	EA	TEE, MALE RUN 1/4in	5.05
	N	627	H3759X6	0.25	EA	TEE, MALE RUN 3/8in	6.75
	N	627	H3759X8	0.51	EA	TEE, MALE RUN 1/2in	11.75
	N	484	H412538LH	0.60	EA	HINGE,BUTT,FLUSH MNT,STL-ZINC	8.70
	N	484	H412538RH	0.60	EA	HINGE,BUTT,FLUSH MNT,STL-ZINC	8.70
	N	484	H412550LH	0.75	EA	HINGE,BUTT,FLUSH MNT,STL-ZINC,	9.10
	N	484	H412550RH	0.75	EA	HINGE,BUTT,FLUSH MNT,STL-ZINC,	9.10
	N	627	H5015X10X8	0.13	EA	*DISCONTINUED* TUBE, REDUCER	3.36
	N	627	H5015X16X12	0.31	EA	TUBE, REDUCER 1in X 3/4in	7.42
	N	627	H5015X6X4	0.05	EA	TUBE, REDUCER 3/8in X 1/4in	2.10

Buyers Products Company * 9049 Tyler Blvd. * Mentor, OH 44060 *
*** F.O.B. Mentor, Ohio * $25.00 Minimum Order**

Price List in Effect on 12/1/2016 * For ALL Items in Catalogs * Marking NEW Pricing on Items Changed Since 11/1/2016

	N	627	H5015X8X4	0.09	EA	TUBE, REDUCER 1/2in X 1/4in	3.21
	N	627	H5015X8X6	0.10	EA	TUBE, REDUCER 1/2in X 3/8in	2.75
	Y	620	H5036171	48.00	EA	PUMP,HYDRAULIC 2/4 BOLT 7/8-13	491.15
	Y	620	H5036201	48.44	EA	PUMP,HYDRAULIC 2/4 BOLT 7/8-13 -	473.80
	Y	620	H5036203	49.55	EA	PUMP,HYDRAULIC 2/4 BOLT 1in KEYED	473.80
	Y	620	H5036221	52.20	EA	PUMP,HYDRAULIC 2/4 BOLT 7/8-13	473.80
	Y	620	H5036251	53.37	EA	PUMP,HYDRAULIC 2/4 BOLT 7/8-13	473.80
	Y	620	H5036253	53.56	EA	PUMP,HYD, 2/4 BOLT 1in KEYED, 4 Ports	473.80
	N	631	H504	7.69	EA	BRACKET-H50 PUMP W/4.00 PILOT	68.80
	N	627	H5105X10	0.09	EA	NUT 3 PIECE 5/8in	1.68
	N	627	H5105X12	0.15	EA	NUT 3 PIECE 3/4in	2.18
	N	627	H5105X3	0.04	EA	*DISCONTINUED* NUT 3 PIECE 3/16in	0.40
	N	627	H5105X4	0.03	EA	NUT 3 PIECE 1/4in	0.59
	N	627	H5105X6	0.04	EA	NUT 3 PIECE 3/8in	0.84
	N	627	H5105X8	0.07	EA	NUT 3 PIECE 1/2in	1.09
	N	627	H5129X10	0.10	EA	CAP 5/8in TUBE OD	1.93
	N	627	H5129X12	0.19	EA	CAP 3/4in TUBE OD	2.60
	N	627	H5129X14	0.23	EA	CAP 7/8in TUBE OD	3.47
	N	627	H5129X16	0.28	EA	CAP 1in TUBE OD	3.43
	N	627	H5129X20	0.56	EA	CAP 1 1/4in TUBE OD	6.30
	N	627	H5129X4	0.03	EA	CAP 1/4in TUBE OD	0.65
	N	627	H5129X5	0.04	EA	CAP 5/16in TUBE OD	0.85
	N	627	H5129X6	0.04	EA	CAP 3/8in TUBE OD	1.00
	N	627	H5129X8	0.08	EA	CAP 1/2in TUBE OD	1.30
	Y	620	H5134171	44.00	EA	PUMP CCW 1-3/4in GEAR 3.5 CIR	779.00
	Y	620	H5134251	49.55	EA	PUMP CCW 4BOLT SAE B 6.0 CIR	779.00
	N	627	H5165X10	0.02	EA	SLEEVE, 3 PIECE 5/8in TUBE OD	0.85
	N	627	H5165X12	0.03	EA	SLEEVE, 3 PIECE 3/4in TUBE OD	1.23
	N	627	H5165X16	0.04	EA	SLEEVE 3 PIECE 1in TUBE OD	1.60
	N	627	H5165X4	0.01	EA	SLEEVE 3 PIECE 1/4in TUBE OD	0.41
	N	627	H5165X6	0.01	EA	SLEEVE, 3 PIECE 3/8in TUBE OD	0.50
	N	627	H5165X8	0.01	EA	SLEEVE, 3 PIECE 1/2in TUBE OD	0.69
	N	627	H5205X10	0.18	EA	CONNECTOR, MALE JIC TO MALE NPT	3.42
	N	627	H5205X10X12	0.23	EA	CONNECTOR, MALE JIC TO MALE NPT	6.05
	N	627	H5205X12	0.29	EA	CONNECTOR, MALE JIC TO MALE NPT	4.12
	N	627	H5205X12X16	0.50	EA	CONNECTOR, MALE JIC TO MALE NPT	5.73
	N	627	H5205X12X8	0.24	EA	CONNECTOR, MALE JIC TO MALE NPT	4.10
	N	627	H5205X16	0.43	EA	CONNECTOR, MALE JIC TO MALE NPT	5.99
	N	627	H5205X16X12	0.40	EA	CONNECTOR, MALE JIC TO MALE NPT	6.50
	N	627	H5205X20	0.33	EA	CONNECTOR, MALE JIC TO MALE NPT	9.86
	N	627	H5205X4	0.04	EA	CONNECTOR, MALE JIC TO MALE NPT	1.02
	N	627	H5205X4X4	0.05	EA	CONNECTOR, MALE JIC TO MALE NPT	1.11
	N	627	H5205X4X6	0.09	EA	CONNECTOR, MALE JIC TO MALE NPT	1.71
	N	627	H5205X4X8	0.17	EA	CONNECTOR, MALE JIC TO MALE NPT	2.59
	N	627	H5205X6	0.07	EA	CONNECTOR, MALE JIC TO MALE NPT	1.27
	N	627	H5205X6X2	0.05	EA	CONNECTOR, MALE JIC TO MALE NPT	1.61
	N	627	H5205X6X6	0.06	EA	CONNECTOR, MALE JIC TO MALE NPT	1.50
	N	627	H5205X6X8	0.17	EA	CONNECTOR, MALE JIC TO MALE NPT	2.35
	N	627	H5205X8	0.10	EA	CONNECTOR, MALE JIC TO MALE NPT	1.78

Buyers Products Company * 9049 Tyler Blvd. * Mentor, OH 44060 *
*** F.O.B. Mentor, Ohio * $25.00 Minimum Order**

Price List in Effect on 12/1/2016 * For ALL Items in Catalogs * Marking NEW Pricing on Items Changed Since 11/1/2016

	N	627	H5205X8X12	0.45	EA	CONNECTOR, MALE JIC TO MNPT 1/2INX3/4IN	3.65
	N	627	H5205X8X4	0.10	EA	*DISCONTINUED* CONNECTOR, MALE JIC	
	N	627	H5205X8X8	0.18	EA	CONNECTOR, MALE JIC TO MALE NPT	2.17
	N	627	H5229X10	0.13	EA	PLUG 5/8in	1.65
	N	627	H5229X12	0.22	EA	PLUG 3/4in	2.38
	N	627	H5229X16	0.33	EA	PLUG 1in	3.63
	N	627	H5229X20	0.53	EA	PLUG, 1 1/4in	7.50
	N	627	H5229X4	0.03	EA	PLUG 1/4in	0.92
	N	627	H5229X5	0.03	EA	PLUG 5/16in	1.35
	N	627	H5229X6	0.04	EA	PLUG 3/8in	0.84
	N	627	H5229X8	0.08	EA	PLUG 1/2in	1.50
	N	627	H5255X20	0.44	EA	*DISCONTINUED*CONNECTOR, MALE	
	N	627	H5255X32	0.44	EA	CONNECTOR, MALE JIC TO FEM NPT	80.65
	N	627	H5255X6	0.09	EA	CONNECTOR, MALE JIC TO FEM NPT	1.80
	N	627	H5255X8X8	0.27	EA	CONNECTOR, MALE JIC TO FEM NPT	3.77
	N	627	H5305X10	0.18	EA	CONNECTOR, MALE JIC TO MALE JIC	3.23
	N	627	H5305X12	0.29	EA	CONNECTOR, MALE JIC TO MALE JIC	3.74
	N	627	H5305X4	0.04	EA	CONNECTOR, MALE JIC TO MALE JIC	1.22
	N	627	H5305X6	0.07	EA	CONNECTOR, MALE JIC TO MALE JIC	1.93
	N	627	H5305X8	0.12	EA	CONNECTOR, MALE JIC TO MALE JIC	2.67
	N	627	H5315X10	0.18	EA	CONNECTOR, 5/8 MJIC TO 5/8 MALE STR THRD	2.90
	N	627	H5315X10X12	0.33	EA	CONNECTOR, MALE JIC TO MALE STR THRD	3.96
	N	627	H5315X10X8	0.17	EA	CONNECTOR, MALE JIC TO MALE STR THRD	2.95
	N	627	H5315X12	0.33	EA	CONNECTOR, MALE JIC TO MALE STR THRD	4.51
	N	627	H5315X12X10	0.28	EA	CONNECTOR, MALE JIC TO MALE STR THRD	4.10
	N	627	H5315X12X16	0.49	EA	CONNECTOR, MALE JIC TO MALE STR THRD	5.84
	N	627	H5315X12X8	0.25	EA	CONNECTOR, MALE JIC TO MALE STR THRD	4.30
	N	627	H5315X16	0.45	EA	CONNECTOR, MALE JIC TO MALE STR THRD	13.44
	N	627	H5315X16X20	0.81	EA	CONNECTOR, MALE JIC TO MALE STR THRD	13.73
	N	627	H5315X4	0.05	EA	CONNECTOR, MALE JIC TO MALE STR THRD	1.11
	N	627	H5315X4X6	0.09	EA	CONNECTOR, MALE JIC TO MALE STR THRD	1.30
	N	627	H5315X6	0.08	EA	CONNECTOR, MALE JIC TO MALE STR THRD	1.19
	N	627	H5315X6X4	0.06	EA	CONNECTOR, MALE JIC TO MALE STR THRD	1.37
	N	627	H5315X6X8	0.12	EA	CONNECTOR, 3/8 MJIC TO 1/2 MALE STR THRD	1.88
	N	627	H5315X8	0.13	EA	CONNECTOR, MALE JIC TO MALE STR THRD	2.32
	N	627	H5315X8X10	0.19	EA	CONNECTOR, MALE JIC TO MALE STR THRD	2.39

Buyers Products Company * 9049 Tyler Blvd. * Mentor, OH 44060 *
*** F.O.B. Mentor, Ohio * $25.00 Minimum Order**

Price List in Effect on 12/1/2016 * For ALL Items in Catalogs * Marking NEW Pricing on Items Changed Since 11/1/2016

	N	627	H5315X8X12	0.33	EA	CONNECTOR, MALE JIC TO MALE STR THRD	3.96
	N	627	H5315X8X6	0.09	EA	CONNECTOR, MALE JIC TO MALE STR THRD	2.32
	N	627	H5325X10	0.30	EA	UNION, BULKHEAD 5/8in	5.10
	N	627	H5325X12	0.48	EA	UNION, BULKHEAD 3/4in	7.64
	N	627	H5325X16	0.64	EA	UNION, BULKHEAD 1in	10.25
	N	627	H5325X4	0.07	EA	UNION, BULKHEAD 1/4in	2.25
	N	627	H5325X6	0.11	EA	UNION, BULKHEAD 3/8in	2.90
	N	627	H5325X8	0.20	EA	UNION, BULKHEAD 1/2in	3.70
	N	627	H5355X10	0.24	EA	*DISCONTINUED*ELBOW, MALE 45 DEG	
	N	627	H5355X12	0.36	EA	ELBOW, MALE 45 DEG 3/4in X 3/4in	7.64
	N	627	H5355X16	0.56	EA	ELBOW, MALE 45 DEG 1in X 1in	11.51
	N	627	H5355X4X4	0.08	EA	ELBOW, MALE 45 DEG 1/4in X 1/4in	2.85
	N	627	H5355X6	0.08	EA	ELBOW, MALE 45 DEG 3/8in X 1/4in	2.60
	N	627	H5355X6X6	0.14	EA	*DISCONTINUED* ELBOW, MALE 45 DEG	3.25
	N	627	H5355X8	0.14	EA	ELBOW, MALE 45 DEG 1/2in X 3/8in	3.90
	N	627	H5356X10	0.90	EA	ELBOW, 45 DEG SWIVEL NUT 5/8in	7.05
	N	627	H5356X12	1.00	EA	ELBOW, 45 DEG SWIVEL NUT 3/4in	8.80
	N	627	H5356X16	1.12	EA	ELBOW, 45 DEG SWIVEL NUT 1in	16.00
	N	627	H5356X6	0.75	EA	ELBOW,45 DEGREE SWIVEL NUT 3/8in	4.05
	N	627	H5356X8	0.83	EA	ELBOW, 45 DEG SWIVEL NUT 1/2in	4.85
	N	627	H5365X12	0.53	EA	ELBOW, 45 STR THD O RING,	9.30
	N	627	H5365X4	0.07	EA	ELBOW, 45 STR. THRD. O RING	3.55
	N	627	H5365X6	0.12	EA	ELBOW, 45 ,9/16in O RING TO JIC	3.55
	N	627	H5405X10	0.30	EA	ELBOW, 90 DEG MALE JIC TO MALE NPT	4.77
	N	627	H5405X12	0.50	EA	ELBOW, 90 DEG MALE JIC TO MALE NPT	7.01
	N	627	H5405X12X8	0.46	EA	ELBOW, 90 DEG MALE JIC TO MALE NPT	7.18
	N	627	H5405X16	0.86	EA	ELBOW, 90 DEG MALE JIC TO MALE NPT	10.39
	N	627	H5405X20	1.59	EA	ELBOW, 90 DEG MALE JIC TO MALE NPT	21.39
	N	627	H5405X24	2.40	EA	ELBOW, 90 DEG MALE JIC TO MALE NPT	37.07
	N	627	H5405X4	0.07	EA	ELBOW, 90 DEG MALE JIC TO MALE NPT	2.21
	N	627	H5405X4X4	0.17	EA	ELBOW, 90 DEG MALE JIC TO MALE NPT	2.32
	N	627	H5405X6	0.12	EA	ELBOW, 90 DEG MALE JIC TO MALE NPT	2.56
	N	627	H5405X6X6	0.25	EA	ELBOW, 90 DEG MALE JIC TO MALE NPT	3.11
	N	627	H5405X6X8	0.25	EA	ELBOW, 90 DEG MALE JIC TO MALE NPT	4.56
	N	627	H5405X8	0.19	EA	ELBOW, 90 DEG MALE JIC TO MALE NPT	3.47
	N	627	H5405X8X12	0.48	EA	ELBOW, 90 DEG MALE JIC TO MALE NPT	7.00
	N	627	H5405X8X8	0.28	EA	ELBOW, 90 DEG MALE JIC TO MALE NPT	4.09

Buyers Products Company * 9049 Tyler Blvd. * Mentor, OH 44060 *
*** F.O.B. Mentor, Ohio * $25.00 Minimum Order**

Price List in Effect on 12/1/2016 * For ALL Items in Catalogs * Marking NEW Pricing on Items Changed Since 11/1/2016

	N	627	H5425X10	0.37	EA	*DISCONTINUED* ELBOW, 90 DEG MALE	8.90
	N	627	H5425X14	0.80	EA	*DISCONTINUED*ELBOW, 90 DEG MALE	
	N	627	H5425X4X4	0.15	EA	ELBOW, 90 DEG MALE LONG 1/4in X	3.95
	N	627	H5455X10	0.49	EA	*DISCONTINUED* ELBOW, 90 DEG FEMALE	5.25
	N	627	H5455X16	1.35	EA	ELBOW, 90 DEG FEMALE 1in X 1in	16.46
	N	627	H5505X12	0.58	EA	ELBOW,90 DEG UNION 3/4in	7.92
	N	627	H5505X8	0.24	EA	*DISCONTINUED* ELBOW,90 DEG UNION 1/2in	
	N	627	H5506X10	0.40	EA	ELBOW, 90 DEG SWIVEL 5/8in	6.25
	N	627	H5506X12	0.63	EA	ELBOW, 90 DEG SWIVEL NUT 3/4in	7.38
	N	627	H5506X16	0.99	EA	ELBOW, 90 DEG SWIVEL NUT 1in	13.00
	N	627	H5506X4	0.07	EA	ELBOW, 90 DEG SWIVEL NUT 1/4in	2.70
	N	627	H5506X6	0.13	EA	ELBOW, 90 DEG SWIVEL NUT 3/8in	3.43
	N	627	H5506X8	0.28	EA	ELBOW, 90 DEG SWIVEL NUT 1/2in	4.40
	N	627	H5515X10	0.47	EA	ELBOW, 90 DEG MALE JIC TO MALE STR THRD	6.99
	N	627	H5515X12	0.66	EA	ELBOW, 90 DEG MALE JIC TO MALE STR THRD	9.30
	N	627	H5515X14	0.89	EA	*DISCONTINUED*ELBOW, 90 DEG MALE JIC TO	
	N	627	H5515X16	1.03	EA	ELBOW, 90 DEG MALE JIC TO MALE STR THRD	14.45
	N	627	H5515X5	0.11	EA	*DISCONTINUED* ELBOW, 90 DEG MALE JIC TO	2.80
	N	627	H5515X6	0.14	EA	ELBOW, 90 DEG MALE JIC TO MALE STR THRD	2.72
	N	627	H5515X6X8	0.25	EA	ELBOW, 90 DEG MALE JIC TO MALE STR THRD	4.59
	N	627	H5515X8	0.30	EA	ELBOW, 90 DEG MALE JIC TO MALE STR THRD	4.76
	N	627	H5515X8X10	0.39	EA	ELBOW, 90 DEG MALE JIC TO MALE STR THRD	6.85
	N	627	H5515X8X6	0.21	EA	5ELBOW, 90 DEG MALE JIC TO MALE STR THRD	4.77
	N	627	H5525X12	0.30	EA	*DISCONTINUED*ELBOW, BULKHEAD	
	N	627	H5525X8	0.20	EA	ELBOW, BULKHEAD UNION 1/2in	6.30
	N	627	H5705X4	0.08	EA	STBD TEE, UNION 1/4in	3.39
	N	627	H5705X6	0.14	EA	TEE, UNION 3/8in	3.58
	N	627	H5705X8	0.29	EA	TEE, UNION 1/2in	6.19
	N	627	H5706X10	0.44	EA	*DISCONTINUED*TEE, SWIVEL NUT RUN 5/8in	
	N	627	H5706X12	0.76	EA	TEE, SWIVEL NUT RUN 3/4in	14.10
	N	627	H5706X16	1.13	EA	TEE, SWIVEL NUT RUN 1in	19.99
	N	627	H5706X8	0.33	EA	TEE, SWIVEL NUT RUN 1/2in	6.78
	N	627	H5707X8	0.34	EA	TEE, SWIVEL NUT BRANCH 1/2in	7.34
	N	627	H5715X6	0.15	EA	TEE, STR. THD O-RING BRANCH	4.80
	N	627	H5715X8	0.30	EA	*DISCONTINUED*TEE, STR. THD.	
	N	627	H5716X6	0.17	EA	TEE, STR. THD. O-RING RUN	6.24
	N	627	H5716X8	0.35	EA	TEE, STR. THD. O-RING RUN	6.75
	N	627	H5726X6	0.17	EA	TEE, BULKHEAD RUN 3/8in	6.70
	N	627	H5726X8	0.35	EA	TEE, BULKHEAD RUN 1/2in	8.95

Buyers Products Company * 9049 Tyler Blvd. * Mentor, OH 44060 *
*** F.O.B. Mentor, Ohio * $25.00 Minimum Order**

Price List in Effect on 12/1/2016 * For ALL Items in Catalogs * Marking NEW Pricing on Items Changed Since 11/1/2016

	N	627	H5924X10	0.05	EA	NUT, BULKHEAD 5/8in	0.99
	N	627	H5924X12	0.09	EA	NUT, BULKHEAD 3/4in	1.29
	N	627	H5924X16	0.12	EA	NUT, BULKHEAD 1in	2.00
	N	627	H5924X4	0.02	EA	NUT, BULKHEAD 1/4in	0.48
	N	627	H5924X6	0.03	EA	NUT, BULKHEAD 3/8in	0.50
	N	627	H5924X8	0.04	EA	NUT, BULKHEAD 1/2in	0.70
	Y	620	H6134171	51.00	EA	PUMP, HYDRAULIC FOR LIVE FLOOR	881.70
	Y	620	H6134251	49.55	EA	PUMP, HYDRAULIC FOR LIVE FLOOR	914.80
	N	627	H7238X10	0.09	EA	PLUG,SOCKET STR THD O RING HEX	1.68
	N	627	H7238X12	0.14	EA	PLUG,SOCKET STR THD O RING HEX	2.96
	N	627	H7238X16	0.22	EA	PLUG,SOCKET STR THD O RING HEX	3.82
	N	627	H7238X2	0.01	EA	PLUG,SOCKET STR THD O RING HEX	0.57
	N	627	H7238X20	0.35	EA	PLUG, SOCKET STR THD O RING	5.92
	N	627	H7238X4	0.03	EA	PLUG,SOCKET STR THD ORING HEX	0.65
	N	627	H7238X6	0.03	EA	PLUG, SOCKET STR THD O RING	0.82
	N	627	H7238X8	0.05	EA	PLUG,SOCKET STR THD 0 RING HEX	1.30
	N	627	H890X20X16	1.00	EA	CONNECTOR, 90 DEG STR THD HOSE	25.56
	N	627	H9100X12X12	0.36	EA	FEMALE 37 DEG JIC SW TO MP	7.30
	N	627	H9100X16X16	0.51	EA	FEMALE 37 DEG JIC SW TO MP	11.60
	N	627	H9100X4X4	0.07	EA	FEMALE 37 DEG JIC SW TO MP	3.05
	N	627	H9100X6X6	0.14	EA	FEMALE 37 DEG JIC SW TO MP	3.60
	N	627	H9100X8X8	0.17	EA	FEMALE 37 DEG JIC SW TO MP	4.35
	N	627	H9205X12X12	0.30	EA	CONNECTOR, FEM NPT SWVL TO MALE NPT	6.10
	N	627	H9205X12X16	0.51	EA	CONNECTOR, FEM NPT SWVL TO MALE NPT	10.10
	N	627	H9205X12X8	0.29	EA	CONNECTOR, FEM NPT SWVL TO MALE NPT	6.90
	N	627	H9205X16X12	0.50	EA	CONNECTOR, FEM NPT SWVL TO MALE NPT	10.90
	N	627	H9205X16X16	0.48	EA	CONNECTOR, FEM NPT SWVL TO MALE NPT	9.65
	N	627	H9205X20X20	0.79	EA	CONNECTOR, FEM NPT SWVL TO MALE NPT	15.60
	N	627	H9205X24X24	1.17	EA	CONNECTOR, FEM NPT SWVL TO MALE NPT	23.25
	N	627	H9205X32X32	1.69	EA	CONNECTOR, FEM NPT SWVL TO MALE NPT	55.60
	N	627	H9205X4X4	0.08	EA	CONNECTOR, FEM NPT SWVL TO MALE NPT	2.55
	N	627	H9205X4X6	0.12	EA	CONNECTOR, FEM NPT SWVL TO MALE NPT	2.95
	N	627	H9205X6X4	0.13	EA	CONNECTOR, FEM NPT SWVL TO MALE NPT	2.90
	N	627	H9205X6X6	0.13	EA	CONNECTOR, FEM NPT SWVL TO MALE NPT	2.85
	N	627	H9205X6X8	0.20	EA	CONNECTOR, FEM NPT SWVL TO MALE NPT	3.55
	N	627	H9205X8X12	0.29	EA	CONNECTOR, FEM NPT SWVL TO MALE NPT	6.00
	N	627	H9205X8X6	0.19	EA	CONNECTOR, FEM NPT SWVL TO MALE NPT	3.70

Buyers Products Company * 9049 Tyler Blvd. * Mentor, OH 44060 *
*** F.O.B. Mentor, Ohio * $25.00 Minimum Order**

Price List in Effect on 12/1/2016 * For ALL Items in Catalogs * Marking NEW Pricing on Items Changed Since 11/1/2016

	N	627	H9205X8X8	0.22	EA	CONNECTOR, FEM NPT SWVL TO MALE NPT	3.80
	N	627	H9255X12X12	0.33	EA	CONNECTOR, FEM NPT SWVL TO FEM NPT	6.85
	N	627	H9255X16X16	0.51	EA	CONNECTOR, FEM NPT SWVL TO FEM NPT	10.90
	N	627	H9255X8X8	0.22	EA	CONNECTOR, FEM NPT SWVL TO FEM NPT	5.15
	N	627	H9315X10X12	0.28	EA	CONNECTOR, MALE STR THRD TO FEM NPT SWVL	6.95
	N	627	H9315X10X8	0.20	EA	CONNECTOR, MALE STR THRD TO FEM NPT SWVL	4.50
	N	627	H9315X12X12	0.31	EA	CONNECTOR, MALE STR THRD TO FEM NPT SWVL	7.00
	N	627	H9315X16X16	0.46	EA	CONNECTOR, MALE STR THRD TO FEM NPT SWVL	9.10
	N	627	H9315X4X4	0.07	EA	CONNECTOR, MALE STR THRD TO FEM NPT SWVL	2.40
	N	627	H9315X6X6	0.12	EA	CONNECTOR, MALE STR THRD TO FEM NPT SWVL	2.80
	N	627	H9315X6X8	0.15	EA	CONNECTOR, MALE STR THRD TO FEM NPT SWVL	5.10
	N	627	H9315X8X6	0.15	EA	CONNECTOR, MALE STR THRD TO FEM NPT SWVL	3.80
	N	627	H9315X8X8	0.20	EA	CONNECTOR, MALE STR THRD TO FEM NPT SWVL	3.65
	N	627	H9355X12X12	0.54	EA	ELBOW, 45 DEG FEM NPT SWVL TO MALE NPT	8.70
	N	627	H9355X16X16	0.74	EA	ELBOW, 45 DEG FEM NPT SWVL TO MALE NPT	14.90
	N	627	H9355X20X20	1.33	EA	ELBOW, 45 DEG FEM NPT SWVL TO MALE NPT	28.96
	N	627	H9355X4X4	0.13	EA	ELBOW, 45 DEG FEM NPT SWVL TO MALE NPT	3.45
	N	627	H9355X6X6	0.23	EA	ELBOW, 45 DEG FEM NPT SWVL TO MALE NPT	4.60
	N	627	H9355X8X8	0.34	EA	ELBOW, 45 DEG FEM NPT SWVL TO MALE NPT	6.00
	N	627	H9385X12X12	0.54	EA	ELBOW, 45 DEG FEM NPT SWVL TO FEM NPT	11.60
	N	627	H9385X4X4	0.13	EA	STBD ELBOW, 45 DEG FEM NPT	4.80
	N	627	H9385X6X6	0.23	EA	STBD ELBOW, 45 DEG FEM NPT	6.25
	N	627	H9385X8X8	0.38	EA	ELBOW, 45 DEG FEM NPT SWVL TO FEM NPT	8.20
	N	627	H9405X12X12	0.75	EA	ELBOW, 90 DEG FEM NPT SWVL TO MALE NPT	8.70
	N	627	H9405X16X16	1.21	EA	ELBOW, 90 DEG FEM NPT SWVL TO MALE NPT	14.00
	N	627	H9405X20X20	2.31	EA	ELBOW, 90 DEG FEM NPT SWVL TO MALE NPT	29.40
	N	627	H9405X4X4	0.09	EA	ELBOW, 90 DEG FEM NPT SWVL TO MALE NPT	3.60
	N	627	H9405X4X6	0.29	EA	ELBOW, 90 DEG FEM NPT SWVL TO MALE NPT	4.70
	N	627	H9405X6X4	0.17	EA	ELBOW, 90 DEG FEM NPT SWVL TO MALE NPT	5.10

Buyers Products Company * 9049 Tyler Blvd. * Mentor, OH 44060 *
*** F.O.B. Mentor, Ohio * $25.00 Minimum Order**

Price List in Effect on 12/1/2016 * For ALL Items in Catalogs * Marking NEW Pricing on Items Changed Since 11/1/2016

	N	627	H9405X6X6	0.29	EA	ELBOW, 90 DEG FEM NPT SWVL TO MALE NPT	4.05
	N	627	H9405X6X8	0.43	EA	ELBOW, 90 DEG FEM NPT SWVL TO MALE NPT	4.60
	N	627	H9405X8X12	0.66	EA	ELBOW, 90 DEG FEM NPT SWVL TO MALE NPT	9.20
	N	627	H9405X8X6	0.39	EA	ELBOW, 90 DEG FEM NPT SWVL TO MALE NPT	6.05
	N	627	H9405X8X8	0.41	EA	ELBOW, 90 DEG FEM NPT SWVL TO MALE NPT	6.05
	N	627	H9406X8X8X8	0.51	EA	TEE, MALE NPT TO FEM NPT SWVL TO FEM NPT	11.00
	N	627	H9455X24X24	3.54	EA	ELBOW, 90 DEG FEM NPT SWVL TO FEM NPT	66.75
	N	627	H9455X32X32	4.22	EA	ELBOW, 90 DEG FEM NPT SWVL TO FEM NPT	81.10
	N	627	H9455X4X4	0.15	EA	ELBOW, 90 DEG FEM NPT SWVL TO FEM NPT	4.65
	N	627	H9455X8X8	0.35	EA	ELBOW, 90 DEG FEM NPT SWVL TO FEM NPT	7.65
	N	627	H9515X10X8	0.46	EA	ELBOW, 90 DEG MALE STR THRD TO FEM NPT	8.25
	N	627	H9515X12X12	0.79	EA	ELBOW, 90 DEG MALE STR THRD TO FEM NPT	13.25
	N	627	H9515X16X16	1.04	EA	ELBOW, 90 DEG MALE STR THRD TO FEM NPT	18.45
	N	627	H9515X4X4	0.17	EA	ELBOW, 90 DEG MALE STR THRD TO FEM NPT	4.35
	N	627	H9515X6X6	0.18	EA	ELBOW, 90 DEG MALE STR THRD TO FEM NPT	4.85
	N	627	H9515X6X8	0.41	EA	ELBOW, 90 DEG MALE STR THRD TO FEM NPT	11.90
	N	627	H9515X8X6	0.41	EA	ELBOW, 90 DEG MALE STR THRD TO FEM NPT	6.20
	N	627	H9515X8X8	0.44	EA	ELBOW, 90 DEG MALE STR THRD TO FEM NPT	6.75
	N	635	HBF12	0.54	EA	CAP,BREATHER 3/4in NPT	13.20
	N	635	HBF12P	0.04	EA	CAP,BREATHER POLY 3/4in NPT	5.50
	N	635	HBF16	0.70	EA	CAP,BREATHER 1in NPT	15.75
	N	635	HBF2	0.20	EA	CAP,BREATHER 1/8in NPT	5.90
	N	635	HBF4	0.15	EA	CAP,BREATHER 1/4in NPT	6.05
	N	635	HBF6	0.17	EA	CAP,BREATHER 3/8in NPT	6.40
	N	635	HBF8	0.29	EA	CAP,BREATHER 1/2in NPT	9.90
	Y	622	HBV025	0.40	EA	VALVE, BALL-FULL PORT 1/4in	6.88
	Y	622	HBV038	0.30	EA	VALVE, BALL-FULL PORT 3/8in	7.66
	Y	622	HBV050	0.60	EA	VALVE, BALL-FULL PORT 1/2in	11.45
	Y	622	HBV075	0.80	EA	VALVE, BALL-FULL PORT 3/4in	14.55
	Y	622	HBV100	1.40	EA	VALVE, BALL-FULL PORT 1in	24.95
	Y	622	HBV125	1.94	EA	VALVE, BALL-FULL PORT 1-1/4in	40.05
	Y	622	HBV150	2.82	EA	VALVE, BALL-FULL PORT 1-1/2in	57.20
	Y	622	HBV200	3.50	EA	VALVE, BALL-FULL PORT 2in	92.55
	Y	622	HBV250	8.90	EA	VALVE, BALL-FULL PORT 2-1/2in NPT	152.00
	Y	622	HBV3W038	0.90	EA	VALVE,BALL 3 WAY,3/8in 5800 PSI	74.90
	Y	622	HBV3W050	1.50	EA	VALVE,BALL 3 WAY,1/2in 5000 PSI	83.90

Buyers Products Company * 9049 Tyler Blvd. * Mentor, OH 44060 *
*** F.O.B. Mentor, Ohio * $25.00 Minimum Order**

Price List in Effect on 12/1/2016 * For ALL Items in Catalogs * Marking NEW Pricing on Items Changed Since 11/1/2016

	Y	622	HBV3W075	3.52	EA	VALVE,BALL 3 WAY,3/4in5000 PSI	139.94
	Y	622	HBV3W100	5.32	EA	VALVE,BALL 3 WAY,1in5000 PSI	140.80
	Y	622	HBV3W125	5.77	EA	VALVE,BALL 3 WAY,1-1/4in5000PSI	184.20
	Y	622	HBVS025	0.88	EA	VALVE, BALL 1/4 7250 PSI	42.36
	Y	622	HBVS038	1.44	EA	VALVE, BALL 3/8in 7250 PSI	44.00
	Y	622	HBVS050	1.68	EA	VALVE, BALL 1/2in 7250 PSI	55.80
	Y	622	HBVS075	3.46	EA	VALVE, BALL 3/4in 5800 PSI	96.18
	Y	622	HBVS100	4.45	EA	VALVE, BALL 1in 5000 PSI	102.82
	N	625	HC095	0.13	EA	CLAMP T-BOLT 1.16-1.38	4.25
	N	625	HC100	0.12	EA	CLAMP T-BOLT 1.38 - 1.56"	4.25
	N	625	HC125	0.14	EA	CLAMP T-BOLT 1.65 - 1.83"	4.35
	N	625	HC130	0.14	EA	CLAMP T-BOLT 1.73-1.97	4.35
	N	625	HC150	0.14	EA	CLAMP T-BOLT 1.86-2.172in	4.40
	N	625	HC155	0.14	EA	CLAMP T-BOLT 2.03-2.34	4.50
	N	625	HC160	0.15	EA	CLAMP T-BOLT 2.16-2.47	4.60
	N	625	HC165	0.15	EA	CLAMP T-BOLT 2.20-2.51	4.60
	N	625	HC200	0.15	EA	CLAMP T-BOLT 2.34-2.65	4.60
	N	625	HC205	0.15	EA	CLAMP T-BOLT 2.41-2.72	4.70
	N	625	HC210	0.15	EA	CLAMP T-BOLT 2.53-2.84	4.70
	N	625	HC215	0.15	EA	CLAMP T-BOLT 2.66-2.97	4.80
	N	625	HC220	0.15	EA	CLAMP T-BOLT 2.78-3.09	4.85
	N	625	HC250	0.15	EA	CLAMP T-BOLT 2.91-3.22	4.85
	N	625	HC260	0.15	EA	CLAMP T-BOLT 3.03-3.34	4.95
	N	625	HC270	0.15	EA	CLAMP T-BOLT 3.16-3.47	5.05
	N	625	HC280	0.17	EA	CLAMP T-BOLT 3.28-3.59	5.05
	N	625	HC295	0.17	EA	CLAMP T-BOLT 3.41-3.72	5.10
	N	625	HC300	0.17	EA	CLAMP T-bolt 3.53-3.84	5.20
	N	625	HC310	0.18	EA	CLAMP T-BOLT 3.66-3.97	5.40
	N	625	HC400	0.18	EA	CLAMP T-BOLT 3.78-4.09	5.30
	N	625	HC410	0.18	EA	CLAMP T-BOLT 4.03-4.34	5.45
	N	625	HC500	0.19	EA	CLAMP T-BOLT 4.78-5.09	5.80
	N	625	HC600	0.20	EA	CLAMP TBOLT 5.78-6.09	6.35
	N	627	HCN050	0.17	EA	NIPPLE, COMBINATION 1/2in	4.30
	N	627	HCN075	0.20	EA	NIPPLE, COMBINATION 3/4in	4.45
	N	627	HCN100	0.33	EA	NIPPLE, COMBINATION 1in	5.20
	N	627	HCN125	0.54	EA	NIPPLE, COMBINATION 1-1/4in	6.45
	N	627	HCN150	0.64	EA	NIPPLE, COMBINATION 1-1/2in	7.45
	N	627	HCN200	0.98	EA	NIPPLE, COMBINATION 2in	9.90
	N	627	HCN250	1.65	EA	NIPPLE, COMBINATION 2-1/2in	19.80
	N	627	HCN300	2.05	EA	NIPPLE, COMBINATION 3in	22.10
	N	624	HCR050	4.29	EA	VALVE, CROSS RELIEF 1/2in SET @2000 PSI	174.50
	N	624	HCR050SAE	4.35	EA	VALVE,CROSS OVER RELIEF SET AT 2,000PSI	147.85
	N	624	HCR075	7.00	EA	VALVE,CROSSOVER RELIEF 3/4in	181.40
	N	624	HCV038	0.43	EA	VALVE,CHECK 3/8in NPT 5 PSI	19.80
	N	624	HCV050	1.00	EA	VALVE,CHECK 1/2in NPT 5 PSI	21.60
	N	624	HCV075	1.70	EA	VALVE,CHECK 3/4in NPT 5 PSI	24.48
	N	624	HCV100	2.15	EA	VALVE,CHECK 1.00 in NPT 5 PSI	30.60
	N	624	HCVD08	3.15	EA	VALVE,DOUBLE CHECK, 1/2in NPT	72.00

Buyers Products Company * 9049 Tyler Blvd. * Mentor, OH 44060 *
*** F.O.B. Mentor, Ohio * $25.00 Minimum Order**

Price List in Effect on 12/1/2016 * For ALL Items in Catalogs * Marking NEW Pricing on Items Changed Since 11/1/2016

	N	635	HD200125	1.02	EA	DIFFUSER 2inNPT X 1 1/4in THRU-	20.90
	N	220	HDCL252	3.90	EA	CONTROL LEVER,HD,FOR 2in TRVL	47.85
	N	220	HDCL262	3.90	EA	LEVER,CONTROL,HD FOR 2in TRVL	48.80
	N	220	HDCL352	4.00	EA	CONTROL LEVER,HD FOR 1/4in-28	47.85
	N	220	HDCL362	3.90	EA	CONTROL LEVER,HD FOR 5/16in-24	47.85
	Y	620	HDS36205	47.00	EA	PUMP BI PAD MOUNT 5.15 CIR	744.45
	Y	620	HDS36255	49.75	EA	PUMP BI PAD MOUNT 6.43 CIR	779.10
	N	634	HDSSCP012	0.70	EA	CLAMP HD SERIES, 1/8in CLAMP FOR PIPE	9.60
	N	634	HDSSCP025	0.70	EA	CLAMP HD SERIES, 1/4in CLAMP FOR PIPE	9.60
	N	634	HDSSCP038	0.70	EA	CLAMP HD SERIES, 3/8in CLAMP FOR PIPE	9.60
	N	634	HDSSCP050	0.80	EA	CLAMP HD SERIES, 1/2in CLAMP FOR PIPE	10.95
	N	634	HDSSCP075	0.80	EA	CLAMP HD SERIES, 3/4in CLAMP FOR PIPE	10.95
	N	634	HDSSCP100	1.30	EA	CLAMP HD SERIES, 1.00in CLAMP FOR PIPE	12.05
	N	634	HDSSCP125	1.30	EA	CLAMP HD SERIES, 1-1/4in CLAMP FOR PIPE	12.05
	N	634	HDSSCT025	0.70	EA	CLAMP HD SERIES, 1/4in CLAMP FOR TUBING	9.60
	N	634	HDSSCT031	0.70	EA	CLAMP HD SERIES, 5/16in CLAMP FOR TUBING	9.60
	N	634	HDSSCT038	0.70	EA	CLAMP HD SERIES, 3/8in CLAMP FOR TUBING	9.60
	N	634	HDSSCT050	0.70	EA	CLAMP HD SERIES, 1/2in CLAMP FOR TUBING	9.60
	N	634	HDSSCT125	1.30	EA	CLAMP HD SERIES,1-1/4in CLAMP FOR TUBING	12.05
	N	635	HFA11015	1.68	EA	FILTER ASSY 10 MIC 15 PSI BYP	30.66
	N	635	HFA11025	1.68	EA	FILTER ASSY 10 MICR 25 PSI BYP	30.66
	N	635	HFA12515	1.68	EA	FILTER ASSY 25 MICR 15 PSI BYP	30.66
	N	635	HFA12525	1.68	EA	FILTER ASSY 25 MICR 25 PSI BYP	30.66
	N	635	HFA21015	3.81	EA	FILTER ASSY 10 MICR 15 PSI BYP	49.55
	N	635	HFA21025	4.46	EA	FILTER ASSY 10 MICR 25 PSI BYP	49.55
	N	635	HFA22515	4.46	EA	FILTER ASSY 25 MICR 15 PSI BYP	49.55
	N	635	HFA22525	4.46	EA	FILTER ASSY 25 MICR 25 PSI BYP	49.55
	N	635	HFA31015	6.56	EA	FILTER ASSY 10 MICR 15 PSI BYP	149.30
	N	635	HFA31025	6.56	EA	FILTER ASSY 10 MICR 25 PSI BYP	149.30
	N	635	HFA32515	6.56	EA	FILTER ASSY 25 MICR 15 PSI BYP	149.30
	N	635	HFA32525	6.56	EA	FILTER ASSY 25 MICR 25 PSI BYP	149.30
	N	635	HFA41015	9.56	EA	FILTER ASSY 10 MICR 15 PSI BYP	216.85
	N	635	HFA41025	9.56	EA	FILTER ASSY 10 MICR 25 PSI BYP	271.05
	N	635	HFA42515	9.56	EA	FILTER ASSY 25 MICR 15 PSI BYP	271.05
	N	635	HFA42525	9.56	EA	FILTER ASSY 25 MICR 25 PSI BYP	271.05
	N	635	HFA51025	6.35	EA	FILTER, TANK IMMERSED RETURN	167.11
	N	635	HFA52525	6.07	EA	FILTER, TANK IMMERSED RETURN	156.25
	N	635	HFA91025	2.80	EA	FILTER,TANK MOUNTED, 26 GPM 10 MICRON	137.05
	N	635	HFA92525	2.60	EA	FILTER,TANK MOUNTED 40 GPM 25 MICRON	128.70

Buyers Products Company * 9049 Tyler Blvd. * Mentor, OH 44060 *
*** F.O.B. Mentor, Ohio * $25.00 Minimum Order**

Price List in Effect on 12/1/2016 * For ALL Items in Catalogs * Marking NEW Pricing on Items Changed Since 11/1/2016

	N	624	HFD075	7.00	EA	VALVE,FLOW DIVIDER,PRIORITY	142.60
	N	624	HFD100	7.50	EA	VALVE,FLOW DIVIDER,PRIORITY	247.00
	N	624	HFDL075	7.71	EA	FLOW DIVIDER LEVER STYLE, 0-30 GPM	142.60
	N	624	HFDL075SAE	7.71	EA	FLOW DIVIDER LEVER STYLE, 0-30 GPM	117.80
	Y	623	HGV038	0.50	EA	VALVE, GATE 3/8in	9.45
	Y	623	HGV050	0.60	EA	VALVE, GATE 1/2in	9.70
	Y	623	HGV075	0.70	EA	VALVE, GATE 3/4in	12.88
	Y	623	HGV100	1.00	EA	VALVE, GATE 1in	17.48
	Y	623	HGV125	1.60	EA	VALVE, GATE 1-1/4in	36.35
	Y	623	HGV150	2.00	EA	VALVE, GATE 1-1/2in	38.18
	Y	623	HGV200	2.90	EA	VALVE, GATE 2in	55.20
	Y	623	HGV250	6.10	EA	VALVE, GATE 2-1/2in	96.60
	N	634	HK0509	0.28	BG	CLAMP,HOSE,.250 DIA, 25 PCS/BAG ,	7.80
	N	634	HK0709	0.32	BG	CLAMP,HOSE,.375 DIA, 25 PCS/BAG ,	6.46
	N	634	HK0809	0.50	BG	CLAMP,HOSE.4375 DIA, 25 PCS/BAG ,	10.12
	N	634	HK0913	0.72	BG	CLAMP,HOSE,.500 DIA, 25 PCS/BAG ,	12.65
	N	634	HK1013	0.98	BG	CLAMP,HOSE.5625 DIA, 25 PCS/BAG,	21.56
	N	634	HK1113	1.06	BG	CLAMP,HOSE,.625 DIA, 25 PCS/BAG ,	14.90
	N	634	HK1213	1.14	BG	CLAMP,HOSE .6875 DIA, 25 PCS/BAG ,	21.56
	N	634	HK1313	1.22	BG	CLAMP,HOSE,.750 DIA, 25 PCS/BAG ,	15.49
	N	634	HK1413	1.30	BG	CLAMP,HOSE.8125 DIA, 25 PCS/BAG ,	21.74
	N	634	HK1513	1.22	BG	CLAMP,HOSE .875 DIA, 25 PCS/BAG ,	21.74
	N	634	HK1713	1.45	BG	CLAMP,HOSE,1.00inDIA, 25 PCS/BAG	18.10
	N	634	HK1813	1.32	BG	CLAMP,HOSE 1.0625 DIA, 25 PCS/BAG ,	29.90
	N	634	HK1913	1.64	BG	CLAMP,HOSE 1.125 DIA, 25 PCS/BAG ,	30.50
	N	634	HK2017	2.30	BG	CLAMP,HOSE 1.1875 DIA, 25 PCS/BAG ,	32.60
	N	634	HK2117	2.40	BG	CLAMP,HOSE 1.250 DIA, 25 PCS/BAG	30.50
	N	634	HK2317	2.60	BG	CLAMP,HOSE 1.375 DIA, 25 PCS/BAG ,	31.80
	N	634	HK2517	2.74	BG	CLAMP,HOSE 1.500 DIA, 25 PCS/BAG ,	35.05
	N	634	HK2917	3.12	BG	CLAMP,HOSE 1.750 DIA, 25 PCS/BAG	39.60
	N	634	HK3117	3.32	BG	CLAMP,HOSE 1.875 DIA,25 PCS/BAG ,	40.92
	N	634	HK3217	3.24	BG	*DISCONTINUED* CLAMP,HOSE 1.9375 DIA,	42.50
	N	634	HK3317	3.52	BG	CLAMP,HOSE,2.00 DIA, 25 PCS/BAG ,	55.85
	N	634	HK3417	3.76	BG	CLAMP,HOSE 2.1563 DIA, 25 PCS/BAG ,	82.25
	N	634	HK3817	4.50	BG	CLAMP,HOSE 2.625 DIA, 25 PCS/BAG ,	75.00
	N	630	HLLG1	0.20	EA	GAUGE,HYD LIQUID LEVEL,5in	26.30
	N	621	HM002P	8.08	EA	MOTOR,HYD, 2 BOLT 2.8 CIPR	461.21
	N	621	HM004P	10.67	EA	MOTOR,HYD, 4 BOLT 2.8 CIPR	450.53
	N	621	HM012P	8.91	EA	*DISCONTINUED* MOTOR,HYD,2 BOLT 4.5 CIPR	
	N	621	HM014P	8.91	EA	MOTOR,HYD, 4 BOLT 4.5 CIPR	462.94
	N	621	HM032P	9.90	EA	MOTOR,HYD, 2 BOLT 7.3 CIPR	498.44
	N	621	HM034P	9.90	EA	MOTOR,HYD,7.3 CIPR,4 BOLT	529.88
	N	621	HM042P	10.40	EA	MOTOR,HYD, 2 BOLT 9.7 CIPR	525.13
	N	621	HM044P	10.40	EA	MOTOR,HYD, 4 BOLT 9.7 CIPR	514.42
	N	621	HM052P	10.90	EA	MOTOR,HYD, 2 BOLT 11.3 CIPR	554.54
	N	621	HM054P	10.90	EA	MOTOR,HYD, 4 BOLT 11.3 CIPR	533.87

Buyers Products Company * 9049 Tyler Blvd. * Mentor, OH 44060 *
*** F.O.B. Mentor, Ohio * $25.00 Minimum Order**

Price List in Effect on 12/1/2016 * For ALL Items in Catalogs * Marking NEW Pricing on Items Changed Since 11/1/2016

	N	621	HM062P	11.56	EA	*DISCONTINUED*MOTOR,HYD,2 BOLT 14.1 CIPR	
	N	621	HM064P	11.56	EA	STBD MOTOR,HYD, 4 BOLT 14.1 CIPR	599.49
	N	621	HM072P	12.56	EA	MOTOR,HYD, 2 BOLT 17.9 CIPR	623.10
	N	621	HM074P	12.56	EA	MOTOR,HYDR,17.9 CIPR,4 BOLT	599.49
	N	621	HM082P	14.87	EA	MOTOR,HYD, 2 BOLT 22.6 CIPR	650.75
	N	621	HM084P	14.87	EA	MOTOR,HYD, AUGER 4 BOLT 22.6 CIPR	656.34
	N	520	HP10	0.04	EA	COTTER, HAIR PIN, 1/8in ZINC	0.25
	N	520	HP11	0.00	EA	HITCH PIN 5/8inDia.	1.02
	N	520	HP12	0.07	EA	COTTER, HAIR PIN, 5/32in ZINC,	0.60
	N	520	HP13	0.07	EA	COTTER, HAIR PIN, 3/16in ZINC	0.40
	N	637	HP16108	9.00	EA	HOSE,HIGH PRESSURE 1in IPS x 9'	87.10
	N	637	HP16132	11.00	EA	HOSE, HIGH PRESSURE 1in IPS x 11FT	93.10
	N	637	HP16144	12.00	EA	HOSE,HIGH PRESSURE 1inIPS X 12'	98.85
	N	637	HP1660	5.00	EA	HOSE,HIGH PRESSURE 1in IPS x 5'	51.90
	N	637	HP1672	6.00	EA	HOSE,HIGH PRESSURE 1in IPS x 6'	60.50
	N	637	HP1696	8.00	EA	HOSE,HIGH PRESSURE 1in IPS x 8'	73.30
	Y	529	HP545WC	0.28	EA	PIN,1/2in HITCH, WITH HP COTTER	2.40
	Y	529	HP6253WC	0.58	EA	PIN,5/8in HITCH, WITH HP COTTER, ZINC	3.25
	Y	529	HP6256WC	0.58	EA	PIN,5/8X4.5 HITCH,HD,W/ HP COTTER ZN YEL	3.20
	Y	529	HP625SC	0.50	EA	PIN,5/8in HITCH,WITH SPRING CLIP,ZINC	6.40
	N	520	HP9	0.01	EA	PIN,HAIR COTTER,3/32inX1-1/2inZN	0.18
	Y	651	HPGC100	0.66	EA	GAUGE,PRESSURE 2-1/2in DIAL,	17.50
	Y	651	HPGC160	0.58	EA	GAUGE,PRESSURE 2 1/2in DIAL	17.50
	N	630	HPGCB160	0.55	EA	GAUGE,PRESSURE 2 1/2in DIAL	15.50
	N	630	HPGCB300	0.55	EA	GAGE, PRESSURE 2 1/2in DIAL	15.50
	Y	652	HPGP3	0.65	EA	GAUGE,PRESSURE 2-1/2in DIAL	18.00
	Y	652	HPGP5	0.66	EA	GAUGE,PRESSURE 2-1/2in DIAL	18.00
	Y	650	HPGS1	0.53	EA	GAUGE,PRESSURE 2 1/2in DIAL	15.00
	Y	650	HPGS10	0.53	EA	GAUGE,PRESSURE 2 1/2in DIAL 1/4	15.00
	Y	650	HPGS100	0.51	EA	GAUGE,PRESSURE 2 1/2inDIAL	15.00
	Y	650	HPGS160	0.50	EA	GAUGE,PRESSURE 2-1/2inDIAL,	15.00
	Y	650	HPGS200	0.53	EA	GAUGE,PRESSURE 2 1/2in DIAL 1/4	15.00
	Y	650	HPGS3	0.51	EA	GAUGE,PRESSURE 2-1/2in DIAL,	15.00
	Y	650	HPGS300	0.56	EA	GAUGE,PRESSURE 2 1/2in DIAL	15.00
	Y	650	HPGS4	0.51	EA	GAUGE,STEM MNT,0-4000 PSI	15.00
	Y	650	HPGS5	0.51	EA	GAUGE,PRESSURE 2-1/2in DIAL	15.00
	Y	650	HPGS500	0.51	EA	GAUGE,PRESSURE 2 1/2inDIAL 1/4in	15.00
	N	570	HR1250	58.50	EA	HOSE REEL,AIR/WATER W/1/2X50ft, HOSE &	399.00
	N	570	HR3850	49.50	EA	HOSE REEL,AIR/WATER W/3/8X50ft, HOSE &	339.50
	N	624	HRV07516	2.20	EA	RELIEF VALVE,INLINE, #12 SAE PRESET AT	107.15
	N	624	HRV07518	2.20	EA	VALVE,INLINE RELIEF 3/4inNPT	100.00
	N	624	HRV10018	2.43	EA	VALVE,INLINE RELIEF,1in NPT,30 GPM	122.00
	N	624	HRV10025	8.09	EA	VALVE,INLINE RELIEF 1in NPT,50 GPM	161.00
	N	630	HSG075	0.10	EA	GAUGE,SIGHT WINDOW,3/4in NPT	11.55
	N	630	HSG100	0.20	EA	GAUGE,SIGHT WINDOW,1in NPT	14.90
	N	630	HSP15P	0.12	EA	GAUGE,PRESSURE 1 1/2in DIAL	8.00

Buyers Products Company * 9049 Tyler Blvd. * Mentor, OH 44060 *
*** F.O.B. Mentor, Ohio * $25.00 Minimum Order**

Price List in Effect on 12/1/2016 * For ALL Items in Catalogs * Marking NEW Pricing on Items Changed Since 11/1/2016

	N	630	HSP15V	0.12	EA	GAUGE,VACUUM 1-1/2in DIAL 1/8in	8.00
	N	624	HSV050	2.95	EA	VALVE,SELECTOR 1/2in NPTF	102.30
	N	624	HSV075	7.50	EA	VALVE,SELECTOR,3/4in NPTF	146.85
	N	624	HSV100	7.50	EA	VALVE,SELECTOR,1in NPTF	163.20
	N	646	HSV1C	1.09	EA	CYLINDER,AIR FOR HSV075/100	146.65
	N	902	HV020	6.09	EA	VALVE ONLY SINGLE 20 GPM	315.30
	N	902	HV1030	7.50	EA	VALVE ONLY 10/30 GPM	315.30
	N	902	HV1030EP	27.64	EA	ELECTRIC HYDRAULIC SPREADER CNTRL KIT	1,730.44
	N	902	HV1030EPG	31.00	EA	ELECTRIC HYDRAULIC SPREADER CNTRL KIT	2,089.90
	N	902	HV1030LS	7.00	EA	VALVE SPREADER 10 GPM/30 GPM # 12 SAE	385.54
	N	902	HV1030SAE	7.00	EA	VALVE ONLY,10/30 GPM SAE THREADS	315.30
	N	624	HV11AG2ED0	12.92	EA	VALVE,DIR CONT,4 WAY SPR CTR, #12 ORB	307.33
	N	624	HV11AGOOD0	12.92	EA	VALVE, DIRECTIONAL 3POS 4WAY,ORB PORTS	276.75
	N	624	HV11AGOOF0	13.00	EA	VALVE,DIR CONT,4 WAY SPR CTR,	302.20
	N	624	HV11BGOOD0	14.00	EA	VALVE,DIR CONT,4 WAY CTR DTT,ALL 3/4	339.55
	N	624	HV13AG2ED0	14.00	EA	VALVE,DIR CONT,3 WAY SPR CTR,	307.33
	N	624	HV13AGOOD0	13.50	EA	VALVE,DIR CONT,3 WAY,ORB PORTS	276.70
	N	624	HV13PGOOD0	15.00	EA	VALVE,DIR CONT,3 WAY DTT OUT,	334.45
	N	624	HV211AAG2ED0	21.91	EA	VALVE,DIR CONT,DBL,4 WAY SPR	468.85
	N	624	HV211AAG3EB0	22.75	EA	*DISCONTINUED RPLCD BY HV211AAG3ED0*	
	N	624	HV211AAGOOD0	23.50	EA	VALVE,DIR CONT,DBL,4 WAY SPR	438.35
	N	624	HV231AAG3ED0	23.00	EA	VALVE,DIR CONT,DBL 3&4 WAY SPR	462.60
	N	624	HV231NAG2EC0	24.00	EA	VALVE,DIR CONT,3WAY DTT IN,4W	507.05
	N	624	HV233AAG2ED0	23.50	EA	VALVE,DIR CONT,DBL 3 WAY SPR	468.83
	N	633	HV25	22.00	EA	VALVE,HYDRAULIC,REPLACES GRESEN AG25P3HP	620.00
	N	633	HV25H	1.10	EA	HANDLE FOR HV25 VALVES WITH LINKAGE	21.78
	N	624	HV3111AAAG2ED0	33.00	EA	VALVE,DIR CONT,TPL,4WAY SPR	672.75
	N	624	HV3111AAAGOOD0	33.00	EA	VALVE,DIR CONT,TPL,4WAY SPR	639.30
	N	624	HV3311NAAG2EC0	33.00	EA	VALVE,DIR CONT,3WAY DTT IN,4	645.10
	N	624	HV3331NAAG2EC0	29.80	EA	VALVE DIR CONT,TPL 3WAY DDT IN	645.10
	N	636	HV515LS	7.00	EA	VALVE SPREADER 5/15 GPM # 12 SAE	382.54
	N	902	HV715	7.00	EA	VALVE ONLY 7/15 GPM	315.30

Buyers Products Company * 9049 Tyler Blvd. * Mentor, OH 44060 *
*** F.O.B. Mentor, Ohio * $25.00 Minimum Order**

Price List in Effect on 12/1/2016 * For ALL Items in Catalogs * Marking NEW Pricing on Items Changed Since 11/1/2016

	N	902	HV715EP	30.00	EA	ELECTRIC HYDRAULIC SPREADER CNTRL KIT	1,730.44
	N	902	HV715EPG	31.00	EA	ELECTRIC HYDRAULIC SPREADER CNTRL KIT	2,089.90
	N	902	HV715SAE	7.00	EA	VALVE ONLY,7/15 GPM SAE THREADS	315.30
	N	902	HVC020	19.21	EA	VALVE & CONSOLE 20 GPM	375.15
	N	902	HVC1	13.12	EA	CONSOLE ONLY, 14 in FOR HV715 /HV1030	59.90
	N	902	HVC1030	21.00	EA	VALVE & CONSOLE 10/30 GPM	354.90
	N	902	HVC715	20.77	EA	VALVE & CONSOLE 7/15 GPM	354.90
	N	624	HVE3	33.47	EA	VALVE,12V,3W,W/O PB	616.60
	N	624	HVE334PB	12.00	EA	VALVE, ELECTRIC 11GPM	1,293.35
	N	624	HVE33PB	17.04	EA	VALVE,12V,3W, 3W, W/PB	989.90
	N	624	HVE342PR4PR PB	16.00	EA	VALVE,12V ELECTRIC,3W/4W2PR/4PR,W/PB	1,930.80
	N	624	HVE342PRPB	17.47	EA	VALVE,12V,3W, 4W, 2PR, W/PB	1,061.80
	N	624	HVE344PB	12.00	EA	VALVE,ELECTRIC,11 GPM	1,432.24
	N	624	HVE34M	50.17	EA	VALVE, 12V, 3W, 4WM, WO/PB	898.05
	N	624	HVE34M3PB	15.00	EA	VALVE,ELECTRIC,3W,4W MOTOR,3W,W/PB	1,302.50
	N	624	HVE34PR3PR3 PRPB	30.90	EA	VALVE,12V, 3W, 4PR, 3PR, PB	1,645.50
	N	624	HVE3PB	12.66	EA	VALVE,12V,3W,W/ PB	654.50
	N	624	HVE4	10.93	EA	VALVE,12V,4W,W/O PB	616.90
	N	624	HVE42PRPB	11.30	EA	VALVE, 12V, 4WPR W/PB	1,116.70
	N	624	HVE44	18.03	EA	VALVE,12V, 4W, 4W, WO/PB	883.40
	N	624	HVE44PB	16.97	EA	VALVE,12V, 4W, 4W, PB	915.40
	N	624	HVE4PB	10.99	EA	VALVE,12V,4WAY, W/PB	654.50
	N	624	HVE4PR	5.00	EA	VALVE,12V,4W,W/PR,W/O PB	785.90
	N	624	HVE4PRPB	10.00	EA	VALVE,ELECTRIC,4W WITH POWER BEYOND	754.68
	N	639	HVEH15	3.90	EA	HARNESS 15ft LG FOR HVE 3 SPOOL VALVE	198.80
	N	639	HVEH9	0.83	EA	HARNESS, 9FT POWER FOR HVE VALVES	68.24
	N	639	HVESB	0.98	EA	SWITCH BOX FOR HVE 3 SPOOL VALVE	103.20
	N	548	HW2000S	11.08	EA	HANDWINCH, 2,000 LB CAPACITY W/26ft	71.30
	N	548	HW800S	4.97	EA	HANDWINCH,800 LBS CAPACITY	34.75
	N	645	K1010AS	2.40	EA	AIR SHIFT KIT FOR BPC1010	119.90
	N	645	K1010C	5.94	EA	VALVE SHIFT CONSOLE	61.00
	N	645	K1010FAS	2.40	EA	PUMP KIT FEATHERING AIR SHIFT	239.55
	N	624	K1010FAS1	1.57	EA	VALVE, NEUTRAL LOCKOUT FEATHER	180.75
	N	645	K1010TAS	1.26	EA	VALVE,AIR,TOGGLE STYLE KIT	98.20
	N	070	K11N	0.01	EA	WOODRUFF KEY 3/16in x 7/8in	0.70
	N	070	K15N	0.02	EA	WOODRUFF KEY 1/4in x 1in	0.82
	N	070	K18N	0.03	EA	WOODRUFF KEY 1/4in x 1-1/8in	0.85
	N	070	K24N	0.05	EA	WOODRUFF KEY 1/4in x 1-1/2in	2.10
	N	070	K5N	0.01	EA	WOODRUFF KEY 1/8in x 5/8in	0.30
	N	645	K70C	5.61	EA	CONSOLE FOR K70DF	129.35
	N	624	K70DETCLIP	0.02	EA	CLIP, DETENT K70	18.65

Buyers Products Company * 9049 Tyler Blvd. * Mentor, OH 44060 *
*** F.O.B. Mentor, Ohio * $25.00 Minimum Order**

Price List in Effect on 12/1/2016 * For ALL Items in Catalogs * Marking NEW Pricing on Items Changed Since 11/1/2016

	N	645	K70DF	3.00	EA	VALVE-PTO/HOIST, FEATHER DOWN	374.85
	N	645	K70DFD	3.00	EA	VALVE,HOIST,FEATHER DOWN CTR DETENT	382.80
	N	645	K70DFNKO	3.00	EA	VALVE,HOIST,FEATHER DWN NON-DISENGA	341.60
	N	645	K80	2.43	EA	VALVE-PTO/HOIST, NON FEATHER	158.40
	N	645	K80D	2.40	EA	VALVE-PTO/HOIST, NON FEATHER	158.40
	N	645	K80DF	2.66	EA	VALVE-PTO/HOIST, FEATHER DOWN	171.60
	N	645	K80F	2.59	EA	VALVE-PTO/HOIST, FEATHER DOWN	171.60
	N	645	K85DF	2.70	EA	VALVE-PTO/HOIST, FEATHER DOWN	189.70
	N	645	K85F	2.63	EA	VALVE-PTO/HOIST, FEATHER DOWN	189.70
	N	645	K90	3.30	EA	VALVE-PTO/HOIST, FEATHER DOWN	196.52
	N	645	K90C	2.50	EA	CONSOLE ONLY,FOR K90 CONTROL	32.70
	N	645	K90D	3.40	EA	VALVE-PTO/HOIST, FEATHER DOWN	210.44
	N	645	K90LC	14.00	EA	CONSOLE (TOWER W/TOP PLATE FOR	79.60
	N	645	K90TC	4.09	EA	CONSOLE 14in HIGH FITS K90,K80D	44.42
	N	645	K90TGC	6.20	EA	CONSOLE ONLY,3-3/8X6-3/4X14 ACCEPTS K80/	58.35
	N	070	K9N	0.01	EA	WOODRUFF KEY 3/16in x 3/4in	0.36
	N	070	KAN	0.02	EA	WOODRUFF KEY 1/4in x 7/8in	0.50
	N	070	KBN	0.03	EA	WOODRUFF KEY 5/16in x 1in	1.00
	N	070	KCN	0.04	EA	WOODRUFF KEY 5/16in x 1-1/8in	1.32
	Y	535	KP20025	13.03	EA	KINGPIN,2in,FORGED,.25in BOLSTER	92.74
	Y	535	KP20031	12.95	EA	KINGPIN,2in,FORGED,.31in BOLSTER	92.74
	Y	535	KP20038	13.00	EA	KINGPIN,2in,FORGED,.38in BOLSTER	92.74
	Y	535	KP20050	13.20	EA	KINGPIN,2in,FORGED,.50in BOLSTER	92.74
	Y	535	KPL200	4.17	EA	LOCK,2in KING PIN	29.00
	Y	535	KPL300	4.17	EA	LOCK, HEAVY-DUTY, 2in KING PIN	38.95
	N	070	KS302	0.02	EA	KEY SQUARE 3/16in x 2in	1.45
	N	070	KS312	0.13	EA	KEY SQUARE 3/16in x 12in	1.45
	N	070	KS402	0.03	EA	KEY SQUARE 1/4in x 2in	1.25
	N	070	KS404	0.13	EA	KEY SQUARE 1/4in x 4in	1.45
	N	070	KS412	0.25	EA	KEY SQUARE 1/4in x 12in	2.00
	N	070	KS4512	0.25	EA	KEY STEP 1/4in x 5/16in x 12in	18.70
	N	070	KS502	0.13	EA	KEY SQUARE 5/16in x 2in	1.45
	N	070	KS504	0.13	EA	KEY SQUARE 5/16in x 4in	2.00
	N	070	KS512	0.38	EA	KEY SQUARE 5/16in x 12in	3.70
	N	070	KS5612	0.35	EA	KEY STEP 5/16in x 3/8in x 12in	18.70
	N	070	KS602	0.13	EA	KEY SQUARE 3/8in x 2in	2.65
	N	070	KS612	0.50	EA	KEY SQUARE 3/8in x 12in	4.70
	N	512	L001	6.80	EA	LEVER-DUMP BODY	37.95
	N	510	L1883	1.00	EA	LATCH,LKG JR ,SS W/CH545 CYL&KEY ASSEM	25.30
	N	510	L1980	1.00	EA	LATCH,LKG,JR,JP STLW/CH545 CYL&KEY ASSEM	13.65
	N	510	L3885	1.13	EA	LATCH,FLUSH STD.LK SS W/LL71 CYL&KEY	25.30
	N	510	L3885RLS	1.43	EA	LATCH,HANDLE,PADDLE ROTARY,	36.75
	N	510	L3890RLS	1.22	EA	LATCH,HANDLE,PADDLE ROTARY,	33.95
	N	510	L38RLSCH545	0.25	EA	CYLINDER & KEYS, CH545 FOR L3885RLS LCH	5.85

Buyers Products Company * 9049 Tyler Blvd. * Mentor, OH 44060 *
*** F.O.B. Mentor, Ohio * $25.00 Minimum Order**

Price List in Effect on 12/1/2016 * For ALL Items in Catalogs * Marking NEW Pricing on Items Changed Since 11/1/2016

	N	510	L3980	1.13	EA	LATCH,SGL PT STD,LK,W/LL71 CYL&KEY ASSEM	12.40
	N	510	L8815	1.50	EA	LATCH,T-HANDLE,SST,SGL PT W/GSKT & CH545	20.48
	N	510	L8815GO	0.01	EA	GASKET FOR L8815 FOLDING TEE	1.05
	N	510	L8816	1.50	EA	LATCH,T-HDL,SST W/GSKT,STUDS,CH545	31.35
	N	510	L8816R	1.43	EA	LATCH, T-HANDLE W/ ROLLER & GASKET,SST	30.65
	N	510	L8825	4.17	EA	LATCH,T-HANDLE,SS,DOUBLE POINT	45.95
	N	510	L8835	4.59	EA	LATCH,T-HANDLE,SS,TRIPLE POINT	50.50
	N	510	L8855	1.50	EA	LATCH,T-HDL,SST W/GSKT,STUDS,	26.10
	N	510	L8915	1.26	EA	LATCH,T-HANDLE,ZINC PLATED W/	16.34
	N	520	LB1	0.71	EA	LIGHT BRACKET, SINGLE OVAL, BLK PC	3.95
	N	520	LB1SS	0.45	EA	LIGHT BRACKET, SINGLE OVAL, SST	7.10
	N	520	LB253	1.86	EA	LIGHT BRACKET, ID, TRIPLE ROUND, BLACK	13.98
	N	520	LB3163	4.84	EA	LIGHT BOX,DUAL OVAL,3X16X3in,BLACK	44.80
	N	520	LB3163ALDT	1.29	EA	LIGHT BOX,DUAL OVAL,ALUMINUM,.063	44.80
	N	520	LB3163SLALDT	3.90	EA	LIGHT BOX,DOUBLE OVAL,SIDE LIGHT,ALDT	58.70
	N	520	LB3163SLSST	4.40	EA	*DISCONTINUED*LIGHT BOX,DOUBLE	124.70
	N	520	LB3163SST	4.50	EA	LIGHT BOX,DUAL OVAL,STAINLESS STEEL	79.75
	N	520	LB3253	6.94	EA	LIGHT BOX,TRIPLE OVAL,4X25X3.5,CS BLK	78.45
	N	520	LB3253ALDT	1.88	EA	LIGHT BOX,TRIPLE OVAL,4X25X3.5,ALUMINUM	100.55
	N	520	LB3253SST	7.19	EA	LIGHT BOX,TRIPLE OVAL,4X25X3.5,STNLS STL	106.70
	N	520	LB383	2.65	EA	LIGHT BOX,SINGLE OVAL,3X8X3	35.25
	N	520	LB383ALDT	2.00	EA	LIGHT BOX,SINGLE OVAL,3X8X3,ALUMINUM	35.25
	N	520	LB383ALSM	2.00	EA	LIGHT BOX,SINGLE OVAL3X8X3,ALUMINUM,.050	39.20
	N	520	LB383P	0.70	EA	LIGHT BOX,BLACK POLY, 3 X 8 X 3	28.50
	N	520	LB383SL	2.65	EA	LIGHT BOX,SINGLE OVAL,SIDE LIGHT,CS,BLK	38.10
	N	520	LB383SLALDT	1.93	EA	LIGHT BOX,SINGLE OVAL,SIDE LIGHT,ALDT	38.10
	N	520	LB383SLSST	2.40	EA	*DISCONTINUED*LIGHT BOX,SINGLE OVAL,	
	N	520	LB383SST	2.50	EA	LIGHT BOX,SINGLE OVAL,3X8X3,STNLS STEEL	84.10
	N	520	LB384	2.55	EA	LIGHT BOX, SINGLE OVAL,BOTH SIDES,3X8X4	45.25
	N	520	LB384SST	2.55	EA	LIGHT BOX, SINGLE OVAL,BOTH SIDES,3X8X4	95.00
	N	903-1	LB4663SST	17.00	EA	LIGHT BOX, SST, 66inL X 3inW X 4inH	366.90

Buyers Products Company * 9049 Tyler Blvd. * Mentor, OH 44060 *
*** F.O.B. Mentor, Ohio * $25.00 Minimum Order**

Price List in Effect on 12/1/2016 * For ALL Items in Catalogs * Marking NEW Pricing on Items Changed Since 11/1/2016

	N	903-1	LB4773SST	20.00	EA	LIGHT BOX, SST, 77inL X 3inW X 4inH	375.15
	N	548	LB5638	6.50	EA	LOAD BINDER 5/16in-3/8in	32.45
	N	520	LB6123	4.95	EA	LIGHT BOX,TWO ROUND,6X12X3	67.55
	N	520	LB6123ALDT	1.35	EA	LIGHT BOX,TWO ROUND,6X12X3 ALUMINUM	52.80
	N	520	LB6123SST	4.09	EA	LIGHT BOX, DOUBLE ROUND, 6X12X3,STNLS ST	79.75
	N	520	LB6183	7.00	EA	LIGHT BOX,THREE ROUND,6X18X3	100.40
	N	520	LB6183ALDT	1.97	EA	LIGHT BOX,THREE ROUND,6X18X3	100.55
	N	520	LB6183SST	5.83	EA	LIGHT BOX,TRIPLE ROUND,6X18X3,STNLS STL	106.70
	N	520	LB663	2.74	EA	LIGHT BOX,SINGLE RD,6X6X3	35.25
	N	520	LB663ALDT	2.00	EA	LIGHT BOX,SINGLE RD,6X6X3,ALUMINUM,.063	35.25
	N	520	LB663ALSM	2.00	EA	LIGHT BOX,SINGLE RD,6X6X3,ALUMINUM,.050	35.25
	N	520	LB663SL	2.72	EA	LIGHT BOX,SINGLE ROUND,SIDE LIGHT,CS,BLK	41.45
	N	520	LB663SLALDT	1.93	EA	LIGHT BOX,SINGLEROUND,SIDE LIGHT,ALDT	41.45
	N	520	LB663SST	2.60	EA	LIGHT BOX,SINGLE RD,6X6X3,STNLS STEEL	84.10
	N	520	LB743	2.33	EA	LIGHT BOX,SINGLE RECTANGLE,7X4X3,CS,BLK	47.65
	N	520	LB8133	6.25	EA	LIGHT BOX,TRIPLE OVAL,8 X 13 X3,CS GRAY	78.45
	N	903-1	LB8443SST	19.00	EA	LIGHT BOX,44in ASSEMBLY	288.50
	N	903-1	LB8445SST	19.30	EA	LIGHT BOX,44in ASSEMBLY,MARKER & OVAL	288.50
	N	903-1	LB8663SST	28.00	EA	LIGHT BOX,66in ASSEMBLY	375.15
	N	903-1	LB8665SST	28.00	EA	LIGHT BOX,66in ASSEMBLY,MARKER & OVAL	375.15
	N	630	LDR02A	0.40	EA	GAUGE-OIL LEVEL	31.35
	N	630	LDR04	0.65	EA	SIGHT TEMPERATURE GAGE,POLYCARBONATE	24.60
	N	648	LFK3718	143.24	EA	WETLINE KIT,LIVE FLOOR,37 GAL	1,905.80
	N	648	LFK3724	143.24	EA	WETLINE KIT,LIVE FLOOR,37 GAL 6.0 CIR	1,967.60
	N	648	LFK5018	227.98	EA	WETLINE KIT,LIVE FLOOR,50 GAL	1,881.30
	N	648	LFK5024	227.98	EA	WETLINE KIT,LIVE FLOOR,50 GAL	1,943.10
	N	510	LL9000	2.04	EA	LATCH,T-HANDLE,DIE CAST, BLACK W/CHROME	38.80
	N	510	LL90003	2.06	EA	LATCH,T-HANDLE,DIE CAST, 3 POINT	40.42
	N	548	LR1	0.16	EA	LOAD RING,ADJUSTABLE,3,000 lb BREAKING	3.50
	N	526	LS1665120	15.00	EA	LINER SLAT-120in	87.14
	N	526	LS1665144	18.00	EA	LINER SLAT-144in	104.58
	N	526	LS166545	5.70	EA	LINER SLAT-44.63in	30.52
	N	526	LS166548	5.70	EA	LINER SLAT-47.25in	32.96
	N	526	LS166554	6.50	EA	LINER SLAT-53.25in	38.70
	N	526	LS166572	9.00	EA	LINER SLAT-71.25in	51.74

Buyers Products Company * 9049 Tyler Blvd. * Mentor, OH 44060 *
*** F.O.B. Mentor, Ohio * $25.00 Minimum Order**

Price List in Effect on 12/1/2016 * For ALL Items in Catalogs * Marking NEW Pricing on Items Changed Since 11/1/2016

	N	526	LS166590	11.50	EA	LINER SLAT-90in	62.92
	Y	538	LT10	25.00	EA	RACK,(3) TRIMMER,LANDSCAPE	211.40
	Y	538	LT12	15.15	EA	TRIMMER RACK,(3) ENCLOSED	158.85
	Y	538	LT13	18.50	EA	RACK,TRIMMER,(3)PLACE CHNL STYLE	192.65
	Y	538	LT15	15.00	EA	MULTI-RACK,LANDSCAPE TRAILER	75.95
	Y	538	LT20	9.14	EA	RACK,BACKPACK BLOWER	67.80
	Y	538	LT22	6.50	EA	RACK,STIHL BLOWER COMPLETE	66.16
	Y	538	LT25	7.79	EA	RACK,WATER COOLER,LANDSCAPE	57.60
	Y	538	LT30	12.83	EA	RACK,GAS CAN,LANDSCAPE TRAILER	68.80
	Y	538	LT32	11.22	EA	RACK,LOCKING GAS CAN,LANDSCAPE TRAILER	82.58
	Y	538	LT35	10.82	EA	RACK,HAND TOOL,LANDSCAPE	105.55
	Y	538	LT37	8.77	EA	RACK,HANDTOOL FOR ENCLOSED	56.90
	Y	538	LT40	2.76	EA	BRACKET,TRIMMER LINE SPOOL	28.90
	N	527	LW10	4.00	EA	DRAWBAR,2-1/2in I.D.,5 TON CAP	20.25
	N	527	LW20	12.52	EA	DRAWBAR,3in, 10 TON CAP	61.65
	N	527	LW625	2.90	EA	EYE RING,FORGED LUNETTE,3inID, 5inOD	22.95
	N	527	LW847	9.00	EA	LUNETTE EYE,RING,3inID,6.25inOD	43.45
	N	600	M3100	16.50	EA	MOTOR,DC,COUNTER CLOCKWISE,TANG SHAFT	130.70
	N	600	M3200	16.50	EA	MOTOR,DC,CLOCKWISE ROTATION,TANG SHAFT	130.70
	N	600	M3300	18.50	EA	DC MOTOR,12V,BI-ROTATIONAL	130.70
	N	600	M3400	16.75	EA	MOTOR,DC CLOCKWISE ROTATE,SPLINE SHAFT/9	130.70
	N	859	MFBH2375A	6.50	PR	PLATE,MNT,W/90 BEND,(PAIR)	22.70
	N	859	MFBH2375F	6.50	PR	PLATE,MNT (SPLASH GUARD)PR	22.70
	N	859	MFW2375	2.60	PR	PLATE,BOLTING (SPLASH GUARD)PR	11.05
	N	510	N1883	1.00	EA	LATCH,JR REC,FLUSH,SST NON-	21.25
	N	510	N1980	1.00	EA	LATCH,SINGLE POINT,NON-LKG	10.80
	N	510	N3885	1.13	EA	STD. FLUSH LATCH NL - SS	23.30
	N	510	N3980	1.13	EA	LATCH,SINGLE POINT STD NON-LKG	10.00
	Y	030	NB10A	0.71	EA	JOURNAL ASSEMBLY	16.10
	Y	030	NB12A	0.83	EA	JOURNAL ASSEMBLY,REF:CPL12R,BOXED	13.10
	Y	030	NB7A	0.50	EA	JOURNAL ASSEMBLY	16.60
	N	649	NBT0M25P125S	0.03	EA	FITTING,MALE BRANCH TEE,SWIVEL	5.97
	N	649	NBT0M25P25S	0.05	EA	FITTING,MALE BRANCH TEE,SWIVEL	5.97
	N	649	NBT0M375P375S	0.15	EA	FITTING,MALE BRANCH TEE,SWIVEL	9.08
	N	649	NC00M25P125	0.02	EA	FITTING,CONNECTOR,MALE,DOT,PUSH-IN,	2.44
	N	649	NC00M25P25	0.03	EA	FITTING,CONNECTOR,MALE,DOT,PUSH-IN,	2.65
	N	649	NC00M375P25	0.06	EA	FITTING,CONNECTOR,MALE,DOT,PUSH-IN,	4.22
	N	649	NC00M375P375	0.06	EA	FITTING,CONNECTOR,MALE,DOT,PUSH-IN,	4.44
	N	649	NE90M25P125S	0.02	EA	FITTING,MALE SWIVEL,ELBOW,DOT,	3.08

Buyers Products Company * 9049 Tyler Blvd. * Mentor, OH 44060 *
*** F.O.B. Mentor, Ohio * $25.00 Minimum Order**

Price List in Effect on 12/1/2016 * For ALL Items in Catalogs * Marking NEW Pricing on Items Changed Since 11/1/2016

	N	649	NE90M25P25S	0.05	EA	FITTING,MALE SWIVEL,ELBOW,DOT	3.15
	N	649	NE90M375P25S	0.06	EA	FITTING,MALE SWIVEL,ELBOW,DOT,	5.15
	N	649	NE90M375P375S	0.05	EA	FITTING,MALE SWIVEL,ELBOW,DOT,	6.35
	N	649	NRT0M25P125S	0.04	EA	FITTING,MALE RUN TEE,SWIVEL,	5.35
	N	649	NT04100	1.71	RL	TUBING, NYLON 1/4in X 100ft, BLACK	66.30
	N	649	NT04250	3.53	RL	TUBING, NYLON 1/4in X 250ft	191.00
	N	649	NT06100	3.19	RL	TUBING, NYLON 3/8in X 100ft., BLACK	145.10
	N	649	NT06500	15.50	RL	TUBING, NYLON 3/8in X 500ft, BLACK	667.80
	N	649	NT08100	5.75	RL	TUBING, NYLON 1/2in X 100ft, BLACK	186.10
	N	649	NT08500	22.25	RL	TUBING, NYLON 1/2in X 500ft, BLACK	894.60
	N	649	NT10100	9.00	RL	TUBING, NYLON 5/8in X 100ft.	476.00
	N	649	NT10250	21.20	RL	TUBING, NYLON 5/8in X 250ft.	1,274.15
	N	649	NT12050	5.00	RL	TUBING, NYLON 3/4in X 50ft.	308.00
	N	649	NTB04100	1.22	EA	TUBING, NYLON 1/4in X 100ft., BLUE	66.30
	N	649	NTB06100	3.19	EA	TUBING, NYLON 3/8in X 100ft., BLUE	145.10
	N	649	NTG06100	2.80	RL	TUBING, NYLON 3/8in X 100ft., GREEN	196.00
	N	649	NTR04100	1.77	RL	TUBING, NYLON 1/4inX 100ft RED	66.30
	N	649	NTR06100	2.80	RL	TUBING, NYLON 3/8in X 100ft., RED	145.10
	N	649	NTY04100	1.24	RL	TUBING, NYLON 1/4in X 100ft., YELLOW	66.30
	N	649	NUC0P25	0.01	EA	FITTING,UNION CONNECTOR DOT,PUSH-IN,	3.30
	N	649	NUC0P375	0.03	EA	FITTING,UNION CONNECTOR,DOT,PUSH-IN,	5.28
	N	649	NUC0P500	0.04	EA	FITTING,UNION CONNECTOR DOT,PUSH-IN,	8.75
	N	649	NUC0P625	0.07	EA	FITTING,UNION CONNECTOR DOT,PUSH-IN,	25.45
	N	649	NUC0P750	0.20	EA	FITTING,UNION CONNECTOR DOT,PUSH-IN,	36.50
	N	649	NUE90P375	0.03	EA	FITTING,UNION ELBOW,DOT,PUSH-IN,TUBE	6.35
	N	649	NUT0P25	0.02	EA	FITTING,UNION TEE,DOT,PUSH-IN,TUBE	4.56
	N	649	NUT0P375	0.05	EA	FITTING,UNION TEE,DOT,PUSH-IN,TUBE	7.95
	N	520	OP181815	17.50	EA	OUTRIGGER PAD, POLYETHYENE, 18X18X1.5in	257.30
	N	520	OP18X18	22.30	EA	OUTRIGGER PAD	93.50
	N	520	OP18X18P	11.68	EA	OUTRIGGER PAD,POLYETHYLENE,18X18X1in,	119.75
	N	520	OP18X18R	30.01	EA	OUTRIGGER PAD,RUBBER,(2 EA per ctn)$/ea	91.79
	N	520	OP242415	30.00	EA	OUTRIGGER PAD, POLYETHYENE, 24X24X1.5in	326.00
	N	520	OP24X24P	20.75	EA	OUTRIGGER PAD,POLYETHYLENE,24X24X1in,	152.90
	N	525-1	P11C	0.15	EA	PIN,SAFETY, 1/4in ZINC PLATED	2.00
	Y	390	P12	1.63	EA	PILLOW BLOCK 3/4in	17.90
	Y	390	P12SCR	1.60	EA	PILLOW BLOCK,3/4in,SET SCREW LOCKING	11.30
	Y	390	P14	2.00	EA	PILLOW BLOCK 7/8in	18.00

Buyers Products Company * 9049 Tyler Blvd. * Mentor, OH 44060 *
*** F.O.B. Mentor, Ohio * $25.00 Minimum Order**

Price List in Effect on 12/1/2016 * For ALL Items in Catalogs * Marking NEW Pricing on Items Changed Since 11/1/2016

	Y	390	P15	2.00	EA	PILLOW BLOCK 15/16in	19.15
	Y	390	P16	1.90	EA	PILLOW BLOCK 1in	19.20
	Y	390	P16SCR	1.90	EA	PILLOW BLOCK,1in,SET SCREW LOCKING	12.00
	Y	390	P18	3.25	EA	PILLOW BLOCK 1-1/8in	25.45
	Y	390	P18HEX	3.10	EA	PILLOW BLOCK 1-1/8in HEX	47.95
	Y	390	P18SCR	3.40	EA	PILLOW BLOCK,1-1/8in,SET SCREW LOCKING	15.00
	Y	390	P20	4.10	EA	PILLOW BLOCK 1-1/4in	27.80
	Y	390	P20SCR	3.30	EA	PILLOW BLOCK,1-1/4in,SET SCREW LOCKING	15.00
	Y	390	P22SCR	4.00	EA	PILLOW BLOCK,1-3/8in,SET SCREW LOCKING	18.85
	Y	390	P24	4.75	EA	PILLOW BLOCK 1-1/2in	36.35
	Y	390	P24SCR	5.00	EA	PILLOW BLOCK,1-1/2in,SET SCREW LOCKING	22.10
	Y	390	P28SCR	5.60	EA	PILLOW BLOCK,1-3/4in,SET SCREW LOCKING	26.50
	Y	390	P30SCR	7.00	EA	PILLOW BLOCK,1-15/16in,SET SCREW LOCKING	33.20
	Y	390	P32SCR	8.50	EA	PILLOW BLOCK,2in,SET SCREW LOCKING	39.80
	N	525	P45AC4	26.00	EA	PINTLE HOOK,45 TON, (4) HOLE	305.00
	N	525-1	P45AC4BK	3.20	EA	BRACKET,CHAMBER MOUNT P45AC4	33.90
	N	525	P45AC4K	38.40	EA	PINTLE HOOK KIT,45 TON (4)HOLE	333.10
	N	525	P45AC6	29.60	EA	PINTLE HOOK,45 TON, (6) HOLE	338.88
	N	525-1	P45AC6BK	3.20	EA	BRACKET,CHAMBER MNT,P45AC6	33.35
	N	525	P45AC6K	42.00	EA	PINTLE HOOK KIT,45 TON,(6)HOLE	385.95
	N	290	P5262	0.06	EA	PIVOT PIN,1/4in-28,&5/16in-24	3.40
	N	648	PB10	4.70	EA	BRACKET KIT, PUMP SUPPORT	41.30
	N	525	PH15	11.00	EA	PINTLE HOOK,DROP FORGED,15TON	79.51
	N	525	PH20	13.16	EA	PINTLE HOOK,FORGED,20 TON	103.13
	N	525	PH30	24.00	EA	PINTLE HOOK,30 TON	158.24
	N	525	PH45	23.00	EA	PINTLE HOOK,45 TON,RIGID MOUNT	295.45
	N	525	PH5	9.30	EA	PINTLE HOOK,5 TON CAPACITY	54.56
	N	525	PH50	28.90	EA	PINTLE HOOK,50 TON, W/O CHAMBER,6 HOLE	313.70
	N	525	PH50AC	44.80	EA	PINTLE HOOK,50 TON, AIR COMPENSATED,	396.40
	N	525	PH50ACMK	15.90	EA	CHAMBER KIT, PH50AC PINTLE HITCH	82.75
	N	525	PH55	38.60	EA	PINTLE HOOK,50 TON, W/O CHAMBER,10 HOLE	359.20
	N	525	PH55AC	54.50	EA	PINTLE HOOK,50 TON, AIR COMPENSATED,	441.95
	N	525	PH8	8.84	EA	PINTLE HOOK,RIGID MOUNT,8 TON	54.64
	N	900	PLB11SS	5.00	ST	BRACKET KIT,PLOW LIGHT,SST	137.30
	N	900	PLB12SS	11.10	ST	BRACKET KIT,PLOW LIGHT, EXTENDED, SST	147.30
	N	544	PM1012	26.00	EA	PINTLE MOUNT,6 POSN, 14in SHANK	95.26
	N	544	PM105	16.00	EA	PINTLE MOUNT,2 POSN,10inSHANK	55.06
	N	544	PM107	17.00	EA	PINTLE MOUNT,3 POSN,10inSHANK	65.06

Buyers Products Company * 9049 Tyler Blvd. * Mentor, OH 44060 *
*** F.O.B. Mentor, Ohio * $25.00 Minimum Order**

Price List in Effect on 12/1/2016 * For ALL Items in Catalogs * Marking NEW Pricing on Items Changed Since 11/1/2016

	N	544	PM25612	11.50	EA	PINTLE MOUNT,2-1/2in SQX12inSHANK,2 POSN	62.86
	N	544	PM812	24.00	EA	PINTLE MOUNT,6 POSN,12.25inSHNK	85.78
	N	544	PM84	12.00	EA	PINTLE MOUNT,4inPLATE,8inSHANK	53.98
	N	544	PM87	15.00	EA	PINTLE MOUNT,3 POSN,9in SHANK	52.52
	N	627	PPM08	0.12	EA	PLUG, MAGNETIC DRAIN 1/2in	3.55
	N	627	PPM12	0.18	EA	PLUG, MAGNETIC DRAIN 3/4in W/SEALANT	3.75
	N	627	PPM16	0.26	EA	PLUG,MAGNETIC DRAIN 1in npt RECESSED W/	6.30
	N	640	PS15	0.20	EA	SWITCH, PRESSURE 15 PSI NO	35.35
	N	627	PS25	0.16	EA	SWITCH, PRESSURE 25 PSI NO	40.30
	N	624	PS2501K	0.50	EA	SWITCH,PRESSURE ADJ 250-1000PSI,1/4NPT	69.50
	N	624	PS2575	0.28	EA	SWITCH, HYDRAULIC PRESSURE	77.95
	N	639	PSK25	1.00	EA	MONITOR,HYD FLT ELEM KIT 25PSI	40.50
	N	636	PU1143	0.04	EA	*DISCONTINUED REPLACED BY HBF12P*	
	N	636	PU303LRS	47.00	EA	POWER UNIT,STEEL RESERVOIR W/	802.35
	N	636	PU304	31.00	EA	POWER UNIT,HYDRAULIC 12V DC	470.40
	N	636	PU304LR	41.75	EA	POWER UNIT,HYDRAULIC,12V DC	487.92
	N	636	PU310	36.30	EA	POWER UNIT,HYDRAULIC 12V DC	652.45
	N	636	PU310LR	46.00	EA	POWER UNIT,HYDRAULIC 12V DC	754.40
	N	636	PU311	32.00	EA	POWER UNIT,HYDRAULIC 12V DC	554.60
	N	636	PU311LR	36.50	EA	POWER UNIT,HYDRAULIC 12V DC	589.10
	N	636	PU319	26.00	EA	POWER UNIT,HYDRAULIC 12V DC	602.25
	N	636	PU319LR	29.06	EA	POWER UNIT,HYDRAULIC 12V	622.10
	N	636	PU319LRS	40.58	EA	POWER UNIT, 12V DC W/ STEEL RS	668.70
	N	636	PU3593	34.00	EA	POWER UNIT,HYDRAULIC 12V DC,SNOW PLOW	1,037.20
	N	636	PU3593LR	42.00	EA	POWER UNIT 4W/3W/(1) GAL 6X9	1,185.10
	N	636	PU3593LRV	42.00	EA	POWER UNIT 4W/3W (1) GAL RSVR VERTICAL	1,200.40
	N	636	PU5003	32.00	EA	POWER UNIT,HYDRAULIC 12V DC,SNOW PLOW	606.50
	N	636	PU5007	35.00	EA	POWER UNIT,HYDRAULIC 12V DC,SNOW PLOW	754.55
	N	636	PU526	25.00	EA	POWER UNIT,HYDRAULIC 12V DC	415.90
	N	636	PU642	39.00	EA	POWER UNIT,HYDRAULIC 12V DC	591.15
	N	636	PU642LR	40.25	EA	POWER UNIT,HYDRAULIC 12V DC	796.45
	N	636	PU642LRS	47.88	EA	HYDRAULIC POWER UNIT 12V DC	947.66
	N	636	PU642S	39.13	EA	UNIT, POWER 12V DC	908.50
	N	647	QDDC121	0.30	EA	CAP,DUST,3/4in W/CHAIN	17.70
	N	644	QDDC161	0.40	EA	CAP,DUST 1in W/CHAIN	12.75
	N	644	QDDC201	0.55	EA	CAP,DUST,1-1/4in W/CHAIN	29.88
	N	644	QDDC241	0.81	EA	CAP,DUST,1-1/2in W/CHAIN	58.28
	N	647	QDDP122	0.41	EA	PLUG,DUST 3/4in W/CHAIN	20.05
	N	644	QDDP162	0.60	EA	PLUG,DUST,1inW/CHAIN	12.60
	N	644	QDDP202	0.70	EA	PLUG,DUST,1-1/4in W/CHAIN	32.08
	N	220	QDS52	5.20	EA	SHIFTER,DUALinQin1/4-28 PTO &	109.60
	N	220	QDS62	5.20	EA	SHIFTER,DUALinQin,5/16-24,PTO &	109.60
	N	647	QDWC12	2.28	EA	COUPLER,WING TYPE QUICK, 3/4in	72.40

Buyers Products Company * 9049 Tyler Blvd. * Mentor, OH 44060 *
*** F.O.B. Mentor, Ohio * $25.00 Minimum Order**

Price List in Effect on 12/1/2016 * For ALL Items in Catalogs * Marking NEW Pricing on Items Changed Since 11/1/2016

	N	647	QDWC121	0.76	EA	MALE END WING TYPE QUICK	33.60
	N	647	QDWC122	1.24	EA	FEMALE END WING TYPE QUICK	38.80
	N	644	QDWC16	3.25	EA	COUPLER,WING TYPE,1in	94.40
	N	644	QDWC161	1.35	EA	COUPLER,WING,1inMALE END ONLY	44.00
	N	644	QDWC162	1.90	EA	COUPLER,WING,1inFEMALE END ONLY	50.40
	N	644	QDWC20	4.50	EA	COUPLER,WING TYPE QUICK,1-1/4in	154.56
	N	644	QDWC201	1.70	EA	COUPLER,WING,1-1/4in MALE END	71.76
	N	644	QDWC202	2.80	EA	COUPLER,WING,1-1/4in FEMALE END	82.80
	N	644	QDWC24	6.15	EA	COUPLER,WING TYPE QUICK 1-1/2in	347.05
	N	647	QDWC241	2.65	EA	WING COUPLER MALE END	166.80
	N	647	QDWC242	2.17	EA	WING COUPLER FEMALE END	183.24
	N	220	QSA52	3.80	EA	SHIFTER,inQinSERIES,AIR PTO,SGL	89.60
	N	220	QSA52M	4.89	EA	SHIFTER,inQinSERIES,AIR PTO,SGL	102.00
	N	220	QSA62	3.80	EA	SHIFTER,inQinSERIES,AIR PTO,SGL	89.60
	N	220	QSA62M	4.89	EA	SHIFTER,inQinSERIES,AIR PTO,SGL	89.60
	N	220	QSSPT52	3.40	EA	STBRB SHIFTER,SINGLEinQin,1/4-28,PTO	55.50
	N	220	QSSPT62	3.40	EA	STBRB SHIFTER,SINGLEinQin,5/16in-24,PTO	55.50
	N	220	QSSPU52	3.40	EA	SHIFTER,SINGLE 1/4-28,HOIST	55.60
	N	220	QSSPU62	3.40	EA	SHIFTER,SINGLE 5/16-24,HOIST	55.60
	N	220	QTD	11.51	EA	CONSOLE,TOWER,DUAL LEVER	39.80
	N	220	QTS	7.40	EA	CONSOLE,TOWERinQin,SINGLE LEVER	33.10
	N	220	QTS52	8.13	EA	SHIFTER,TRIPLEinQin,1/4-28 THD	159.30
	N	220	QTS62	8.13	EA	SHIFTER,TRIPLEinQin,5/16-24,PTO/	159.30
	N	220	QTT	11.45	EA	CONSOLE,TOWER,TRIPLE LEVER	45.20
	N	210	R109	0.75	EA	CABLE,STOP OEM	42.08
	Y	190	R21CX06	0.33	EA	CABLE,CHOKE 6ft	7.00
	Y	190	R21CX08	0.34	EA	CABLE,CHOKE 8ft	7.65
	Y	190	R21CX10	1.00	EA	CABLE,CHOKE 10ft	9.35
	Y	190	R21CX15	0.72	EA	CABLE,CHOKE 15ft	10.45
	Y	160	R38D6X06	2.13	EA	CABLE,PTO & VALVE CONT,LG 6ft,	21.35
	Y	160	R38D6X08	2.13	EA	CABLE,PTO & VALVE CONT,LG 8',	23.80
	Y	160	R38D6X10	2.34	EA	CABLE,PTO & VALVE CONT,LG 10',	25.71
	Y	160	R38D6X12	2.75	EA	CABLE,PTO & VALVE CONT,LG 12',	26.55
	Y	160	R38D6X15	3.00	EA	CABLE,PTO & VALVE CONT,LG 15',	29.55
	Y	160	R38D6X20	3.63	EA	CABLE,PTO & VALVE CONT,LG 20'	38.20
	Y	160	R38D6X25	4.25	EA	CABLE,PTO & VALVE CONT,LG 25ft,	43.65
	Y	160	R38D6X30	4.88	EA	CABLE,PTO & VALVE CONT,LG 30ft,	49.20
	Y	180	R38DR3X04	1.88	EA	CABLE,PTO & VALVE CONT,LG 4FT,	50.64
	Y	180	R38DR3X06	2.13	EA	CABLE,PTO & VALVE CONT,LG 6FT,	51.06
	Y	180	R38DR3X08	2.38	EA	CABLE,PTO & VALVE CONT,LG 8FT	54.82
	Y	180	R38DR3X10	2.63	EA	CABLE,PTO & VALVE CONT,LG 10FT	60.24
	Y	180	R38DR3X12	2.88	EA	CABLE,PTO & VALVE CONT,LG 12FT	62.46
	Y	180	R38DR3X15	3.25	EA	CABLE,PTO & VALVE CONT,LG 15FT	68.24
	Y	181	R38LL5X08	2.53	EA	CABLE,MID-LCH,PLAIN END,LG 8ft	58.40
	Y	181	R38LL5X10	2.64	EA	CABLE,MID-LCH,PLAIN END,LG 10ft	61.25
	Y	181	R38LL5X12	3.20	EA	CABLE,MID-LCH,PLAIN END,LG 12ft	56.75
	Y	181	R38LL5X15	3.32	EA	CABLE,MID-LCH,PLAIN END,LG 15ft	68.35
	Y	181	R38LL5X20	3.97	EA	CABLE,MID-LCH,PLAIN END,LG 20ft	75.45

Buyers Products Company * 9049 Tyler Blvd. * Mentor, OH 44060 *
*** F.O.B. Mentor, Ohio * $25.00 Minimum Order**

Price List in Effect on 12/1/2016 * For ALL Items in Catalogs * Marking NEW Pricing on Items Changed Since 11/1/2016

	Y	181	R38LLR3X08	2.70	EA	CABLE,MID-LCH,ROD END,LG 8ft	72.60
	Y	181	R38LLR3X10	2.88	EA	CABLE,MID-LCH,ROD END, LG 10ft	75.45
	Y	181	R38LLR3X12	3.19	EA	*DISCONTINUED* CABLE,MID-LCH,ROD	
	N	649	RAB038025	0.04	EA	ADAPTOR,REDUCER 3/8inX1/4in BUSH	0.65
	N	649	RAB050038	0.05	EA	REDUCER ADAPTOR 1/2inX3/8in	0.90
	N	627	RAB125075	0.40	EA	BUSHING, REDUCER 1 1/4in X 3/4in	5.60
	N	627	RAB125100	0.26	EA	REDUCER BUSHING,1.25in X 1in	5.55
	N	627	RAB150125	0.30	EA	BUSHING,REDUCING 1-1/2inX1-1/4in	7.15
	N	627	RAB200125	0.67	EA	REDUCER ADAPTOR BUSHING	8.55
	N	627	RAB200150	0.60	EA	BUSHING,REDUCING 2in X 1 1/2in	9.50
	Y	521-1	RB102000	3.30	EA	BALL KIT,2in REPLACEMENT,BH10 BALL MOUNT	34.85
	Y	521-1	RB102516	4.00	EA	BALL KIT,2-5/16in RPLCMENT,BH10 BALL MNT	38.15
	Y	521-1	RB1780	2.25	EA	REPLACEMENT BALL 1-7/8in w/NUT	27.60
	Y	521-1	RB2000	2.50	EA	REPLACEMENT BALL 2in w/NUT	27.60
	Y	521-1	RB2516	2.75	EA	REPLACEMENT BALL 2-5/16in w/NUT	30.96
	Y	521-1	RB50MM	2.75	EA	REPLACEMENT BALL 50MM,DIA W/O NUT	27.60
	N	520	RC10L	0.60	PR	CLAMP,RUBBER,LARGE,(SOLD IN PAIRS)	32.00
	N	520	RC10S	0.30	PR	CLAMP,RUBBER,SMALL,(SOLD IN PAIRS)	15.00
	Y	850	RC18PPB	4.90	PR	MUD FLAP,PLASTIC,24X18,BLACK	17.75
	Y	850	RC18PPW	4.90	PR	MUD FLAP,PLASTIC,PLAIN	21.68
	Y	850	RC24PPB	6.54	PR	MUD FLAP,PLASTIC,24X24,BLACK	23.63
	Y	850	RC24PPW	6.54	PR	MUD FLAP,PLASTIC,24X24,WHITE	28.95
	Y	850	RC30PPB	8.20	PR	MUD FLAP,PLASTIC,24X30,BLACK	29.60
	Y	850	RC30PPBLU	8.20	PR	MUD FLAP,PLASTIC,PLAIN BLUE	42.03
	Y	850	RC30PPR	8.20	PR	MUD FLAP,PLASTIC,PLAIN, RED	42.03
	Y	850	RC30PPW	8.20	PR	MUD FLAP,PLASTIC,24X30,WHITE	36.15
	Y	850	RC36PPB	10.00	PR	MUD FLAP,PLASTIC,24X36,BLACK	35.48
	Y	850	RC36PPW	10.00	PR	MUD FLAP,PLASTIC,24X36,WHITE	47.08
	Y	850	RC40PPB	12.00	PR	MUD FLAP,PLASTIC 24X40, BLACK	39.40
	Y	850	RC40PPW	12.00	PR	MUD FLAP,PLASTIC,24X40,WHITE	48.18
	N	520	RC8M	0.14	EA	CLAMP,RUBBER,MINI,(SOLD IN PAIRS)	8.75
	N	512	RH4350	1.16	EA	RAMP HINGE, STEEL PLATE	6.70
	N	889	RL650A	1.83	EA	LIGHT,REVOLVING,12V W/MAG BASE,AMBER	27.20
	N	548	RLB3812	11.60	EA	LOAD BINDER,RATCHET 3/8-1/2, 9,200#WLL,	40.00
	N	548	RLB5638	10.50	EA	LOAD BINDER,RATCHET,5/16-3/8, 6600# WLL,	38.90
	N	624	RM10	6.80	EA	MANIFOLD, RETURN LINE 6 PORT	122.30
	N	528	RM10H	4.30	EA	TOW HOOK,10,000 LB. RECEIVER MOUNT	32.92
	N	528	RM1225E	9.20	EA	TOW EYE,RECEIVER MOUNT	50.99
	N	528	RM12H	9.00	EA	TOW HOOK,RECEIVER MOUNT	50.99
	N	525	RM5P	14.22	EA	PINTLE HOOK,RCVR-MT,5 TON	76.90

Buyers Products Company * 9049 Tyler Blvd. * Mentor, OH 44060 *
*** F.O.B. Mentor, Ohio * $25.00 Minimum Order**

Price List in Effect on 12/1/2016 * For ALL Items in Catalogs * Marking NEW Pricing on Items Changed Since 11/1/2016

	Y	521	RM62000	19.76	EA	HITCH,COMB,RCVR MT,RM6,6-TON,W/2inBALL	138.40
	Y	521	RM62516	20.38	EA	HITCH,COMB,RCVR MT,RM6,6TON,W/2-5/16 BAL	144.00
	Y	521	RM650M	19.48	EA	HITCH,COMB,RCVR MT,RM6,6 TON,W/50mm	131.80
	Y	161	RO5B5X06	1.18	EA	CABLE,SPL WND PTO/PMP CONT,6FT	18.65
	Y	161	RO5B5X10	2.38	EA	CABLE,SPL WND PTO/PMP CONT,10'	22.50
	Y	161	RO5B5X15	3.05	EA	CABLE,SPL WND PTO/PMP CONT,15'	28.20
	Y	150	RO9D3.5X06	0.67	EA	CABLE,T HANDLE THROTTLE 6FT	19.05
	Y	150	RO9D3.5X10	0.90	EA	CABLE,T HANDLE THROTTLE,10FT	21.90
	Y	150	RO9D3.5X15	1.21	EA	CABLE,T HANDLE THROTTLE,15FT	25.30
	Y	150	RO9D3.5X20	2.38	EA	CABLE,T HANDLE THROTTLE,20'	32.70
	Y	150	RO9D3.5X25	2.63	EA	CABLE,T HANDLE THROTTLE,25'	36.25
	Y	150	RO9D3.5X30	3.13	EA	CABLE,T HANDLE THROTTLE,30'	40.75
	N	520	RP8	8.50	EA	RAMP PLATES FOR 2 X 8, BOXED,PAIR=EACH	35.95
	N	523	RS1	18.72	EA	TRUCK STEPS RETRACTABLE,1 RUNG BLK	98.55
	N	548	RS132715F	12.00	EA	TIE DOWN,RATCHET,1 PC,3inX27ft,FLAT-HOOK	78.40
	N	523	RS2	23.00	EA	TRUCK STEPS, RETRACTABLE,2 RUNG	139.70
***	N	523	RS2SS	23.00	EA	TRUCK STEPS, RETRACTABLE,SST	379.95
	N	523	RS2W	23.00	EA	TRUCK STEPS,RETRACTABLE,2RUNG,WHITE	167.00
	N	523	RS2Y	23.00	EA	TRUCK STEPS, RETRACTABLE,2 RUNG	167.00
	N	523	RS3	25.00	EA	TRUCK STEPS, RETRACTABLE,3 RUNG	151.10
***	N	523	RS3SS	25.00	EA	TRUCK STEPS, RETRACTABLE,3 RUNG SST	399.95
	N	523	RS3Y	25.00	EA	TRUCK STEPS, RETRACTABLE,3 RUNG	179.00
	Y	532	RT1251206	1.79	EA	RECEIVER TUBE,1.25inIDx6in,1/2inPH BLACK	22.62
	Y	532	RT1251206UP	1.79	EA	RECEIVER TUBE,1.25inIDx6in,1/2inPH PLAIN	24.25
	Y	532	RT255808	5.81	EA	RECEIVER TUBE,2-1/2inIDx8in,5/8inPH	26.98
	Y	532	RT255812	8.76	EA	RECEIVER TUBE,2-1/2inIDx12in,5/8inPH	33.75
	Y	532	RT255818	12.84	EA	RECEIVER TUBE,2-1/2inIDx18in,5/8inPH	42.65
	Y	532	RT25806	3.76	EA	RECEIVER TUBE,2inIDx6in,5/8inPH	17.83
	Y	532	RT25806B	3.76	EA	RECEIVER TUBE,2inID X 6in,5/8inPH	20.34
	Y	532	RT25808	5.12	EA	RECEIVER TUBE,2inIDx8in,5/8inPH	21.49
	Y	532	RT25808B	5.00	EA	RECEIVER TUBE,2inID X 8in,5/8inPH	23.94
	Y	532	RT25810	6.00	EA	RECEIVER TUBE,2inIDx10in,5/8inPH	23.13
	Y	532	RT25810B	6.00	EA	RECEIVER TUBE,2inID X10in,5/8inPH	26.47
	Y	532	RT25812	7.04	EA	RECEIVER TUBE,2inIDx12in,5/8inPH	25.81
	Y	532	RT25812B	7.04	EA	RECEIVER TUBE,2inIDx12in,5/8inPH	29.91
	Y	532	RT25814	8.29	EA	RECEIVER TUBE,2inIDX14in,5/8inPH	30.21
	Y	532	RT25814B	8.43	EA	RECEIVER TUBE,2inID X14in,5/8inPH	33.72
	Y	532	RT25818	10.00	EA	RECEIVER TUBE,2inIDx18in,5/8inPH	35.10
	Y	532	RT25818B	10.00	EA	RECEIVER TUBE,2inID X18in,5/8inPH	40.26
	Y	532	RT25824	13.76	EA	RECEIVER TUBE,2inIDx24in,5/8inPH	44.91
	Y	532	RT25824B	13.76	EA	RECEIVER TUBE,2inID X24in,5/8inPH	58.16
	Y	532	RT25836	20.49	EA	RECEIVER TUBE,2inIDx36in,5/8inPH	62.81

Buyers Products Company * 9049 Tyler Blvd. * Mentor, OH 44060 *
*** F.O.B. Mentor, Ohio * $25.00 Minimum Order**

Price List in Effect on 12/1/2016 * For ALL Items in Catalogs * Marking NEW Pricing on Items Changed Since 11/1/2016

	Y	532	RT25836B	20.57	EA	RECEIVER TUBE,2inID X36in,5/8inPH	74.12
	Y	532	RT25848	27.16	EA	RECEIVER TUBE,2inIDx48in,5/8inPH	80.29
	Y	532	RT25848B	27.00	EA	RECEIVER TUBE,2inID X48in,5/8inPH	97.79
	Y	532	RTA252	3.25	EA	ADAPTOR,2.5in /2.0in RECEIVER	19.10
	N	548	RTD12271F	6.31	EA	TIE DOWN,RATCHET,1PC,2inX27ft,FLATHK4/CS	39.85
	N	548	RTD12271J	6.25	EA	TIE DOWN,RATCHET,1PC,2inX27ft, JHOOK4/CS	39.85
	N	548	RTD211218	2.53	EA	TIE DOWN,RATCHET,2 PK,1inX12ft, (4/CS)	13.75
	N	548	RTD411218	5.44	EA	TIE DOWN,RATCHET,4 PK,1inX12ft, (4/CS)	27.90
	Y	532	RVA24	7.00	EA	RECEIVER ADAPTER, RV BUMPER	42.80
	N	480	S41	3.63	EA	HINGE,CONT STL,14 GA 1-1/2X72in	10.95
	N	480	S42	4.75	EA	HINGE,CONT STL,14 GA,2in X 72in	12.75
	N	480	S43	5.25	EA	HINGE,CONT STL,14 GA,2-1/2X72in	17.15
	N	480	S47	4.25	EA	HINGE,CONT STL,14 GA,1-1/2X72in	14.70
	N	480	S48	5.75	EA	HINGE,CONT STL,14 GA,2in X 72in	13.45
	N	480	S49	5.75	EA	HINGE,CONT STL,14 GA,2-1/2X72in	15.76
	N	480	S50	6.50	EA	HINGE,CONT STL,14 GA,3in X 72in	21.98
	N	480	S5313	5.75	EA	HINGE,CONT STL,13 GA,2in X 72in	27.55
	N	480	S55	6.50	EA	HINGE,CONT STL,14 GA,3in X 72in	29.60
	N	480	S63	9.38	EA	HINGE,CONT STL,11 GA,2in X 72in	37.25
	N	480	S64	13.10	EA	HINGE,CONT STL,11 GA,2-1/2X72in	45.40
	N	480	S65	11.63	EA	HINGE,CONT STL,11 GA,3in X 72in	43.55
	N	480	S67	14.13	EA	HINGE,CONT STL,11 GA,4in X 72in	50.35
	N	480	S72	19.13	EA	HINGE,CONT STL,7 GA,3in X 72in	96.25
	N	480	S73	22.88	EA	HINGE,CONT STL,7 GA,4in X 72in	105.75
	N	480	S74	26.63	EA	HINGE,CONT STL,7 GA,5in X 72in	119.40
	N	480	S75	30.00	EA	HINGE,CONT STL,7 GA,6in X 72in	138.90
	N	480	S77	37.63	EA	STBD HINGE,CONT STL,7 GA,8in X 72in	150.55
	N	060	SA1	2.90	EA	SHAFT ADAP,1-3/8inX6SPLN X 1in	43.05
	N	526	SA1447WDNH	6.66	EA	STAKE ASSY,W/O HOLES,14 GA,47in	32.70
	N	526	SA1454WDNH	8.50	EA	STAKE ASSY,W/O HOLES,14 GA,54in WELDED	40.00
	N	060	SA2	2.80	EA	SHAFT ADAP,1-3/8in6SPLN X 1-1/8	43.05
	N	060	SA3	2.70	EA	SHAFT ADAP,1-3/8in6SPLN X 1-1/4	43.05
	N	060	SA4	1.50	EA	SHAFT ADAP,1-3/8in6SPLN X 1-1/2	43.05
	N	220	SAC010	6.00	EA	STBD CONSOLE SHORT AIR PTO/HOIST	71.80
	N	220	SAC010B	6.00	EA	CONSOLE,SHORT UNPUNCHED TOP	71.80
	N	220	SAC010M	6.00	EA	CONSOLE, SHORT AIR PTO/HOIST	71.80
	Y	532	SBH2	8.20	EA	HITCH,STEP BUMPER,2in FULL SIZE	46.80
	N	547	SC38B	0.15	EA	CLIP,CHAIN, 3/8 BAR	1.76
	N	547	SC44B	0.19	EA	CLIP,CHAIN,7/16 BAR	1.80
	N	547	SC450C	9.02	EA	BRACKET,SAFETY CHAIN W/CRUCIFORM	38.84
	N	547	SC50B	0.36	EA	CLIP,CHAIN,1/2 BAR	1.84
	N	547	SC58B	0.88	EA	CLIP,CHAIN,5/8inX8.25	2.00

Buyers Products Company * 9049 Tyler Blvd. * Mentor, OH 44060 *
*** F.O.B. Mentor, Ohio * $25.00 Minimum Order**

Price List in Effect on 12/1/2016 * For ALL Items in Catalogs * Marking NEW Pricing on Items Changed Since 11/1/2016

	N	523	SG1501048	3.80	EA	STEP GRIP 3-ROW LADDER RUNG	23.50
	N	859	SG2228	51.00	EA	SPLASH GUARD KIT	152.85
	N	859	SG2229	28.00	EA	SPLASH GUARD KIT, ALUMINUM DIAMOND PLATE	238.90
	Y	110	SH2027	24.02	EA	SPLINED SHAFT 72in	262.75
	N	510	SH35	0.19	EA	HASP,SECURITY 3.5inL X 1-1/2inW,ZINC PLT	2.51
	N	510	SH40	0.82	EA	HASP,SECURITY,4.25in L X 2in W,ZINC	4.20
	N	520	SH675	2.75	EA	HOLDER,SHOVEL,BLACK POWDER COAT,CS	33.38
	N	520	SH675SS	2.75	EA	HOLDER,SHOVEL, SST	50.70
	N	635	SI1003	0.66	EA	STRAINER, SUMP INTERNAL 1in FP	33.70
	N	635	SI1253	0.71	EA	STRAINER, SUMP INTERNAL 1 1/4in	38.70
	N	635	SI1503	1.21	EA	STRAINER, SUMP INTERNAL 1-1/2in	41.10
	N	635	SI2003	1.18	EA	STRAINER, SUMP INTERNAL 2in FP	53.90
	N	635	SI2503	1.70	EA	STRAINER, SUMP INTERNAL 2-1/2in	81.90
	N	639	SK10	1.14	EA	BODY-UP INDICATOR KIT	66.25
	N	639	SK11	1.11	EA	BODYUP INDICATOR KIT W/WAND STYLE SWITCH	92.00
	N	639	SK12	1.70	EA	BODYUP INDICATOR KIT W/BUZZER LIGHT	95.70
	N	639	SK14		EA	BODY-UP INDICATOR KIT	99.85
	N	639	SK16		EA	BODY UP INDICATOR KIT W/BUZZER LIGHT	129.35
	N	513	SL100	2.20	EA	SECURITY LOCK,SHEILDED DESIGN,CRM PLATED	26.00
	N	889	SL40AR	0.70	EA	LIGHT,STROBE,4in ROUND, AMBER,(24) LED,	47.70
	N	889	SL40CR	0.70	EA	LIGHT,STROBE,4in ROUND, CLEAR,(24) LED	58.30
	N	889	SL41AR	0.70	EA	LIGHT,STROBE,4in ROUND,AMBER,(24) LED,	57.50
	N	889	SL475A	0.73	EA	BEACON,24-LED,AMBER,BATTERY,MAG MOUNT	36.50
	N	889	SL475R	0.73	EA	BEACON,24-LED,RED,BATTERY,MAG MOUNT	36.50
	N	889	SL500A	1.13	EA	LIGHT,STROBE,AMBER 12V-24V,	39.90
	N	889	SL501A	1.28	EA	BEACON,40-LED,AMBER,12-24 VDC,MAG-PERM	47.90
	N	889	SL620ALP	2.46	EA	BEACON,3-LED,AMBER,12-24 VDC,MAG-PERM	119.90
	N	889	SL630A	2.65	EA	BEACON,3-LED,AMBER,12-24 VDC,MAG-PERM	119.90
	N	889	SL640ALP	1.75	EA	LIGHT,STROBE AMBER,PERMANENT MOUNT	99.00
	N	889	SL645ALP	2.40	EA	LIGHT,STROBE 6-LED,AMBER,8-FLASH,	131.00
	N	889	SL645CLP	2.40	EA	stbd LIGHT,STROBE,6-LED,CLEAR,8-FLASH,	131.00
	N	889	SL646ALP	2.00	EA	STBD LIGHT,STROBE,6-LED,AMBER	125.98
	N	889	SL650A	1.50	EA	LIGHT,STROBE,MULTI-VOLT,12V-110V	64.45
	N	889	SL65AO	0.70	EA	LIGHT,STROBE,6.5in OVAL, AMBER,LED,REC\	47.70
	N	889	SL65CO	0.70	EA	LIGHT,STROBE,6.5in OVAL, CLEAR,24 LED,RE	58.30

Buyers Products Company * 9049 Tyler Blvd. * Mentor, OH 44060 *
*** F.O.B. Mentor, Ohio * $25.00 Minimum Order**

Price List in Effect on 12/1/2016 * For ALL Items in Catalogs * Marking NEW Pricing on Items Changed Since 11/1/2016

	N	889	SL660A	2.00	EA	LIGHT,STROBE AMBER,6-5/16 DIA X 6-5/16 H	99.00
	N	889	SL665A	2.66	EA	LIGHT,STROBE,6 LED,AMBER,8-FLASH,TALL	134.90
	N	889	SL66AC	0.70	EA	LIGHT,STROBE,6.5in OVAL,AMBER/CLEAR,	76.90
	N	889	SL66AG	0.70	EA	LIGHT,STROBE,6.5in OVAL,AMBER/GREEN	76.90
	N	889	SL66AO	0.70	EA	LIGHT,STROBE,6.5in OVAL, AMBER,(24) LED,	66.90
	N	889	SL675ALP	2.35	EA	BEACON, 8-LED,AMBER,12-24 VDC, MAG	159.70
	N	889	SL685ALP	1.63	EA	BEACON, 8-LED,AMBER,12-24 VDC PERM	136.92
	N	889	SL695A	2.67	EA	BEACON,12-LED,AMBER,12-24 VDC,MAG	211.50
	N	889	SL696A	1.95	EA	BEACON,12-LED,AMBER,12-24 VDC,PERM	198.90
	N	513	SLH100	3.79	EA	SECURITY LOCK HASP,HD W/CYLINDER SHIELD	21.50
	N	638	SMC35A	73.15	EA	RESERVOIR,HYDR,KIT 35 GALLON	678.63
	N	638	SMC50A	77.00	EA	RESERVOIR,HYDR,KIT 50 GALLON	762.40
	N	638	SMC70A	83.50	EA	RESERVOIR,HYDR,KIT,70 GALLON	1,074.50
	N	638	SMR15S	53.00	EA	RESERVOIR,15 GAL,STL W/TEMP-	310.10
	N	638	SMR15SF10	58.13	EA	RESERVOIR,15 GAL, STL, W/TEMP, SIGHT	434.25
	N	638	SMR15SF25		EA	RESERVOIR, 15GAL, W/25 MIC. FILTER	434.25
	N	638	SMR15SS	53.00	EA	RESERVOIR,15 GAL, SST W/TEMP-SIGHT GAUGE	642.90
	N	638	SMR15SSF10	55.80	EA	RESERVOIR,15 GAL, SST W/10 MICRON FILTER	847.40
	N	638	SMR15SSF25	55.80	EA	RESERVOIR,15 GAL, SST W/25 MICRON FILTER	847.40
	N	638	SMR15VESS	65.01	EA	RESERVOIR,15 GAL,SST	1,798.00
	N	638	SMR25AF10	42.80	EA	RESERVOIR, 25GAL, ALUM, W/10 MIC. FILTER	787.06
	N	638	SMR25AF25	42.60	EA	RESERVOIR, 25GAL, ALUM, W/25 MIC. FILTER	787.06
	N	638	SMR25P	43.00	EA	RESERVOIR,25 GAL POLY SIDE MOUNT TANK &	419.15
	N	638	SMR25S	71.00	EA	RESERVOIR,25 GAL,STL,W/TEMP SIGHT	333.05
	N	638	SMR25SF10	73.00	EA	RESERVOIR, 25GAL, W/10 MIC. FILTER	468.62
	N	638	SMR25SF25	73.00	EA	RESERVOIR, 25GAL, W/25 MIC. FILTER	468.62
	N	638	SMR30S	94.20	EA	RESERVOIR, 30 GAL,STL,W/TEMP-	425.80
	N	638	SMR30SS	92.00	EA	RESERVOIR, 30 GAL, STAINLESS STEEL	874.90
	N	638	SMR30SS10	98.35	EA	RESERVOIR, 30 GAL, SST, W/ FILTER 10	1,031.14
	N	638	SMR30SS25	98.70	EA	RESERVOIR, 30 GAL, SST, W/ FILTER 25	1,031.14
	N	638	SMR30VESS	264.01	EA	RESERVOIR, 30 GAL, SST,W/VALVE ENCLOSUR	2,266.00
	N	638	SMR37S	103.00	EA	RESERVOIR,37 GAL,STL,W/TEMP-	541.70
	N	638	SMR50P	76.00	EA	RESERVOIR,SIDE MNT,50 GAL POLY	871.05
	N	638	SMR7S	36.00	EA	RESERVOIR,HYD 7 GAL STEEL	221.25

Buyers Products Company * 9049 Tyler Blvd. * Mentor, OH 44060 *
*** F.O.B. Mentor, Ohio * $25.00 Minimum Order**

Price List in Effect on 12/1/2016 * For ALL Items in Catalogs * Marking NEW Pricing on Items Changed Since 11/1/2016

	N	120	SMS005BK	49.10	EA	BRACKET/STRAP KIT,50&70 GAL STL MNT RSVR	212.55
	N	638	SMS50S	108.00	EA	RESERVOIR,HYD,50GAL,STEEL,SQUARE	507.52
	N	638	SMS70S	134.00	EA	RESERVOIR,HYD,70GAL,STEEL,SQUARE	578.95
	N	648	SMWLK50ADMCCW	191.00	EA	WETLINE KIT,SIDE MOUNT,50 GAL	1,591.40
	N	648	SMWLK50DMCCW	243.00	EA	WETLINE KIT-SIDEMOUNT 50 Gal.	1,393.60
	N	648	SMWLK50PDMCCW	164.99	EA	WETLINE KIT,SIDEMOUNT,50 GAL	1,451.20
	N	648	SMWLK50PDMCW	164.99	EA	WETLINE KIT,SIDEMOUNT,50 GAL,	1,451.20
	N	648	SMWLK70ADMCCW	201.00	EA	WETLINE KIT,SIDE MOUNT 70 GAL	1,673.40
	N	648	SMWLK70ADMCW	201.00	EA	WETLINE,KIT SIDE MOUNT 70 GAL	1,673.40
	N	648	SMWLK70DMCCW	261.00	EA	WETLINE KIT-SIDEMOUNT 70 Gal.	1,549.75
	N	648	SMWLK70DMCW	261.00	EA	WETLINE KIT-SIDEMOUNT 70 Gal.	1,549.75
	N	060	SS	1.50	EA	STUB 1-1/8in-10 SPLINE	19.80
	N	500	SS11	4.50	EA	HINGE,CONT SST,16 GA,3in X 72in	44.25
	N	500	SS12	3.63	EA	HINGE,CONT SST,16 GA,2in X 72in	35.15
	N	500	SS15	5.00	EA	HINGE,CONT SST,14 GA,2in X 72in	59.50
	N	500	SS15N	4.38	EA	HINGE,CONT SST,14 GA,2in X 72in	48.20
	N	500	SS16	5.69	EA	HINGE,CONT SST,14 GA,2-1/2X72in	50.90
	N	500	SS17	6.63	EA	HINGE,CONT SST,14 GA,3in X 72in	59.60
	N	500	SS18	7.88	EA	HINGE,CONT SST,14 GA,4in X 72in	73.00
	N	500	SS19	9.00	EA	HINGE,CONT SST,11 GA,2in x 72in	133.15
	N	500	SS20	11.31	EA	HINGE,CONT SST,11 GA,3in X 72in	163.30
	N	500	SS21	14.28	EA	HINGE,CONT SST,11 GA,4in X 72in	217.15
	N	500	SS8	2.50	EA	HINGE,CONT SST,16 GA,1-1/2X72in	22.55
	N	500	SS9	3.13	EA	HINGE,CONT SST,16 GA,2in X 72in	27.50
	N	634	SSCH025	0.22	EA	CLAMP STD SERIES	4.28
	N	634	SSCH038	0.24	EA	CLAMP STD SERIS 3/8in HOSE	5.25
	N	634	SSCH050	0.38	EA	CLAMP STD SERIES 1/2 HOSE	5.25
	N	634	SSCH062	0.29	EA	CLAMP STD SERIES 5/8in HOSE	6.15
	N	634	SSCH075	0.28	EA	CLAMP STD SERIES 3/4in HOSE	6.15
	N	634	SSCH100	0.42	EA	CLAMP STD SERIES 1in HOSE	7.05
	N	634	SSCP038	0.20	EA	CLAMP STD SERIES 3/8 PIPE	4.70
	N	634	SSCP050	0.24	EA	CLAMP STD SERIES 1/2in PIPE	5.25
	N	634	SSCP075	0.29	EA	CLAMP STD SERIES 3/4in PIPE	6.15
	N	634	SSCP100	0.41	EA	CLAMP STD SERIES 1in HOLE	7.05
	N	634	SSCP125	0.40	EA	CLAMP STD SERIES 1-1/4in PIPE	7.05
	N	634	SSCT025	0.18	EA	CLAMP STD SERIES 1/4in TUBE	4.45
	N	634	SSCT038	0.17	EA	CLAMP STD SERIES 3/8in TUBE	4.45
	N	634	SSCT050	0.21	EA	CLAMP STD SERIES 1/2in TUBE	4.70
	N	634	SSCT062	0.21	EA	CLAMP STD SERIES 5/8in TUBE	4.70
	N	634	SSCT075	0.26	EA	CLAMP STD SERIES 3/4in TUBE	5.25
	N	634	SSCT100	0.24	EA	CLAMP STD SERIES 1in TUBE	5.25

Buyers Products Company * 9049 Tyler Blvd. * Mentor, OH 44060 *
*** F.O.B. Mentor, Ohio * $25.00 Minimum Order**

Price List in Effect on 12/1/2016 * For ALL Items in Catalogs * Marking NEW Pricing on Items Changed Since 11/1/2016

	N	634	SSCT125	0.41	EA	CLAMP STD SERIES 1-1/4in TUBE	6.15
	N	548	ST93	7.85	EA	TRACK,CARGO,AL SUPER TRACK,93-1/2 LG SET	150.60
	N	859	STG1210	1.40	EA	STONE GUARD,11-7/8X10W, (10 PC/BX)	28.50
	N	635	SW1000503	0.68	EA	STRAINER THRU WALL 1inX 1/2in	35.00
	N	635	SW1250753	0.48	EA	STRAINER THRU WALL 1-1/4inX 3/4	35.00
	N	635	SW1501003	0.59	EA	STRAINER THRU-WALL 1 1/2in X 1in	31.25
	N	635	SW2001253	1.10	EA	STRAINER THRU-WALL 2in X 1 1/4in	36.25
	N	635	SW2002003	1.20	EA	STRAINER,THRU WALL 2in NPT X 2in NPT	62.00
	N	635	SW3002003	1.84	EA	STRAINER THRU WALL 3in X 2in FP	58.25
	N	639	SW700	0.89	EA	SWITCH W/FACE PLATE	30.00
	N	639	SW710	0.39	EA	SWITCH, 50 AMP, ROTARY, MOMENTARY	23.98
	N	639	SW901	0.12	EA	SWITCH,MOMENTARY,12V, (2) TERMINALS,	11.95
	N	639	SW911	0.20	EA	SWITCH,TOGGLE,REC,12V (2)BLADE TERMINALS	6.40
	N	639	SW9111	0.20	EA	SWITCH,TOGGLE,12V (2)BLADE TERMINALS	5.10
	N	638	TAF001	0.61	EA	ADAPTOR,TANK FLANGE,STEEL	8.28
	N	638	TAF001A	0.22	EA	ADAPTOR,TANK FLANGE,ALUMINUM	8.28
	N	635	TC0015	0.33	EA	CAP + CHAIN ONLY	10.50
	N	542	TC1002	0.68	EA	STBD CONNECTOR,TRAILER,2 WAY,	9.98
	N	542	TC1004	0.33	EA	CONNECTOR,TRAILER,4 WAY,VEHICLE END,DIE	5.90
	N	542	TC1006	0.34	EA	CONNECTOR,TRAILER,6 WAY,VEHICLE END,DIE	6.40
	N	542	TC1007	0.70	EA	CONNECTOR,TRAILER,7 WAY,VEHICLE END,DIE	9.98
	N	542	TC1007B	0.06	EA	BOOT,TRAILER CONNECTOR,RUBBER,7 WAY	1.40
	N	542	TC1007P	0.27	EA	CONNECTOR,TRAILER,7 WAY,VEHICLE END,	7.14
	N	542	TC1007Z	0.49	EA	CONNECTOR,TRAILER,7 WAY,VEHICLE END,	7.15
	N	542	TC1012	0.68	EA	CONNECTOR,TRAILER,2 WAY,VERTICAL, VEHICL	9.98
	N	542	TC1046B	0.20	EA	BOOT,TRAILER CONNECTOR,RUBBER,4-5-6 WAY	1.35
	N	542	TC1067P	0.80	EA	ADAPTER,TRAILER CONNECTOR,6 WAY TO 7	16.50
	N	542	TC107	0.15	EA	BRACKET,TRAILER CONNECTOR,7 WAY ZINC	2.20
	N	542	TC1077P	0.80	EA	ADAPTER,TRAILER CONNECTOR,7 WAY TO 7 WAY	19.00
	N	542	TC1242	0.19	EA	TRAILER CONNECTOR,4-FLAT W/CAP,48in,	4.06
	N	542	TC1244	0.25	EA	TRAILER CONNECTOR,4-WAY FLAT W/CAP,48in	5.90
	N	542	TC1456	0.20	EA	BRACKET,TRAILER CONNECTOR,4-5-6 WAY ZINC	1.85
	N	542	TC1474P	1.15	EA	CONNECTOR,TRAILER,DUAL PLUG,7 WAY & 4	28.00

Buyers Products Company * 9049 Tyler Blvd. * Mentor, OH 44060 *
*** F.O.B. Mentor, Ohio * $25.00 Minimum Order**

Price List in Effect on 12/1/2016 * For ALL Items in Catalogs * Marking NEW Pricing on Items Changed Since 11/1/2016

	N	542	TC1770B	0.31	EA	CONNECTOR,TRAILER,7 WAY,VEHICLE END W/	14.95
	N	542	TC1770P	0.31	EA	CONNECTOR,TRAILER,7 WAY,VEHICLE END W/	20.50
	N	542	TC1771P	0.33	EA	CONNECTOR,TRAILER,7 WAY,VEHICLE END,	15.95
	N	542	TC1772P	2.88	EA	CONNECTOR, TRAILER, OEM HARNESS, 10FT,	92.75
	N	542	TC1774P	1.15	EA	CONNECTOR,TRAILER,DUAL PLUG,7 WAY & 4	39.00
	N	542	TC2002	0.74	EA	CONNECTOR,TRAILER,2 WAY,HORIZONTAL	9.98
	N	542	TC2004	0.15	EA	CONNECTOR,TRAILER,4 WAY,TRAILER END,DIE	3.45
	N	542	TC2006	0.16	EA	CONNECTOR,TRAILER,6 WAY,TRAILER END,DIE	6.00
	N	542	TC2007	0.75	EA	CONNECTOR,TRAILER,7 WAY,TRAILER END,DIE	8.70
	N	542	TC2007P	0.19	EA	CONNECTOR,TRAILER,7 WAY,TRAILER END,	5.50
	N	542	TC2007Z	0.27	EA	CONNECTOR,TRAILER,7 WAY,TRAILER END	6.50
	N	542	TC2012	0.79	EA	CONNECTOR,TRAILER,2 WAY,VERTICAL,TRAILER	9.98
	N	542	TC2061	0.35	EA	CONNECTOR,TRAILER,6 WAY,VEHICLE END,DIE	6.95
	N	542	TC2064P	0.10	EA	ADAPTER,TRAILER CONNECTOR, 6 WAY TO 4	4.55
	N	542	TC2074P	0.19	EA	ADAPTER,TRAILER CONNECTOR,7 WAY TO 4	4.55
	N	542	TC2074T	0.55	EA	ADAPTER,TRAILER CONNECTOR,7 WAY TO 4	8.99
	N	542	TC2075P	0.22	EA	ADAPTER,TRAILER CONNECTOR,7 WAY TO 5	6.45
	N	542	TC2076P	0.22	EA	ADAPTER,TRAILER CONNECTOR,7 WAY TO 6 WAY	6.35
	N	542	TC2076T	0.57	EA	stbd ADAPTER,TRAILER CONNECTOR,	16.85
	N	542	TC2967P	2.35	EA	CONNECTOR,TRAILER,7 WAY,TRAILER END,	30.00
	N	520	TCH10H	2.25	EA	CONE HOLDER,TRAFFIC,(2 PCS/BOX) 18.5in	20.00
	N	520	TCH10V	2.50	EA	CONE HOLDER,TRAFFIC,(2 PCS/BOX)22in	20.00
	N	520	TCH12V	8.41	EA	CONE HOLDER, BUMPER MOUNT, BLACK w/	49.70
	N	635	TFA005715	0.70	EA	FILLER,BRTHR,ASSY.,W/SCREEN	18.75
	N	635	TFA005715L	0.74	EA	FILLER,BRTHR ASSY W/SCREEN LOCKING	19.50
	N	635	TFAN3	0.56	EA	FILLER,BRTHR,ASSY.,W/NYLON SCREEN	26.50
	N	512	TGBE3125	0.87	EA	BANJO EYE,USED FOR 5/16in CHAIN	5.70
	N	512	TGBE3138	0.78	EA	BANJO EYE,45 DEGREE,USED FOR 3/8in CHAIN	5.70
	N	903-5	TGBE6438	2.39	EA	BANJO EYE,30 DEGREE,SST,USED FOR 3/8in	23.35
	N	649	TGC01TFK	2.50	EA	*DISCONTINUED* TAILGATE CYLINDER	90.52

Buyers Products Company * 9049 Tyler Blvd. * Mentor, OH 44060 *
*** F.O.B. Mentor, Ohio * $25.00 Minimum Order**

Price List in Effect on 12/1/2016 * For ALL Items in Catalogs * Marking NEW Pricing on Items Changed Since 11/1/2016

	N	649	TGC02TFK	3.69	EA	TAILGATE CYLINDER INSTALL.KIT	186.58
	N	512	TGC25006V	6.00	EA	CYLINDER, PNEU TGC, 2.50IN BORE X 6IN	95.60
	N	512	TGC25006VSPK	9.75	EA	CYLINDER,PNEU,TAILGATE KIT	248.54
	N	512	TGC25008V	6.59	EA	CYLINDER,PNEU TGT,2-1/2 X 8in	96.00
	N	512	TGC25008VK	7.75	EA	CYLINDER,TAILGATE,W/MANUAL AIR VALVE	129.40
	N	512	TGC25008VSPK	10.25	EA	CYLINDER,PNEU,TAILGATE KIT,EXTRUDED AL,	253.05
	N	512	TGC32506V	9.00	EA	CYLINDER,PNEU TGT,3.25in X 6in STROKE W/	134.95
	N	512	TGC32506VK	10.25	EA	CYLINDER,TAILGATE,3.25in x 6in W\MANUAL	168.50
	N	512	TGC32506VSPK	13.75	EA	CYLINDER,PNEU,TAILGATE KIT,3.25X6in	268.65
	N	512	TGC32508HM	13.50	EA	CYLINDER,PNEU TGT,3-1/4 X 8in	156.90
	N	512	TGC32508HMKSA	14.00	EA	CYLINDER,PNEU TGT,3-1/4 X 8in	262.25
	N	512	TGC32508V	9.50	EA	CYLINDER,PNEU TGT,3.25in X 8in,CLEVIS	156.74
	N	512	TGC32508VKSA	10.25	EA	CYLINDER,PNEU TGT,3.25inX 8in,REAR CLV,W	240.68
	N	512	TGC32508VSPK	14.25	EA	CYLINDER,PNEU,TAILGATE KIT,3.25X8in,	287.82
	N	512	TGCAM0001	0.46	EA	TAILGATE CAM,1.25in X .625in	7.10
	N	512	TGCAM0002	0.60	EA	TAILGATE CAM, 1in X .50in	7.10
	N	512	TGCAM0003	0.60	EA	TAILGATE CAM, 1in X .625in	7.10
	N	512	TGCAM0004	0.50	EA	TAILGATE CAM, 1.25in X .50in	9.15
	N	512	TGL3410	6.40	EA	TAILGATE LATCH ASSY,ALUMINUM	57.00
	N	512	TGL3410HDW	0.40	EA	TAILGATE LATCH ASSY,ALUM,HDW	2.88
	N	512	TGL3410SS	10.40	EA	TAILGATE LATCH ASSY, STAINLESS STEEL	151.55
	N	512	TGL3410ST	10.33	EA	TAILGATE LATCH ASSY,STEEL	60.00
	N	512	TGL34BKT	1.60	EA	BRACKET FOR TAILGATE ASSEM	24.25
	N	512	TGL34BKTF	4.34	EA	BRACKET,FORGED TAILGATE LATCH	21.90
	N	512	TGL34BKTSS	4.38	EA	BRACKET, SST TAILGATE ASSEMBLY, BASE	79.15
	N	512	TGL34CL	0.60	EA	CLEVIS-ALUMINUM FOR TGL3410	12.50
	N	512	TGL34CLCS	1.75	EA	CLEVIS,STEEL CAST, TAILGATE LATCH	10.90
	N	512	TGL34CLSS	1.81	EA	CLEVIS,STAINLESS STEEL FOR TGL3410SS	35.65
	N	512	TGL34SB	2.38	EA	BAR ASSY.STEEL,1-1/2in W/5/8in	23.80
	N	512	TGL34SBR	3.40	EA	LATCH ASSY.5/8in BAR W/ACORN NUTS,GRS	36.80
	N	520	TH612714	3.00	EA	TANK HOLDER,ADJUSTABLE 6-1/2-7-1/4in,	57.50
	N	520	TH9934	4.00	EA	TANK HOLDER,ADJUSTABLE 9 to 9-3/4in	57.50
	N	889	TL257M	5.32	EA	TOWING LIGHTS, PLASTIC STORAGE CS W/LBL	89.15
	N	510	TL382	1.50	EA	TIPPER LATCH ASSEMBLY	10.65
	N	518	TLP100	2.00	EA	PIN,PLUNGER,TWIST LOCK,SPR	33.00

Buyers Products Company * 9049 Tyler Blvd. * Mentor, OH 44060 *
*** F.O.B. Mentor, Ohio * $25.00 Minimum Order**

Price List in Effect on 12/1/2016 * For ALL Items in Catalogs * Marking NEW Pricing on Items Changed Since 11/1/2016

	N	518	TLP625	1.00	EA	PIN,PLUNGER,TWIST LOCK,SPR LD,.625in DI	27.00
	N	518	TLP750	1.00	EA	PIN,PLUNGER,TWIST LOCK,SPR LD,.750in DIA	27.00
	N	527	TNP716625750	24.00	EA	PLATE,TRAILER NOSE,3/4inX7inX16in	74.80
	N	527	TNP716750100	32.00	EA	PLATE,TRAILER NOSE, 1inX7inX16in	85.50
	Y	760	TR6211512Z	0.85	EA	ROD,DBL THD,5/8in-11 X 12in ZINC	6.67
	Y	760	TR6211514	0.88	EA	ROD,DBL THD,5/8in-11 X 14in	5.35
	Y	760	TR6211516	1.12	EA	ROD,DBL THD,5/8in-11 X 16in	5.85
	Y	760	TR6211518	1.24	EA	ROD,DBL THD,5/8in-11 X 18in	6.40
	Y	760	TR6211520	1.36	EA	ROD,DBL THD,5/8in-11 X 20in	6.65
	Y	760	TR6211522	1.54	EA	ROD,DBL THD,5/8in-11 X 22in	7.15
	Y	760	TR6211524	1.60	EA	ROD,DBL THD,5/8in-11 X 24in	7.50
	N	295	TR6211588	0.74	EA	HARDWARE KIT, 5/8-11 U-BOLTS&TIE RODS,PL	3.55
	Y	350	TS15	0.12	PC	RUBBER TARP STRAP 15in,100/BOX	1.95
	Y	350	TS20	0.15	PC	RUBBER TARP STRAP 20in,100/BOX	2.40
	Y	350	TS31	0.25	PC	RUBBER TARP STRAP 31in,50/BOX	3.65
	Y	350	TS41	0.30	PC	RUBBER TARP STRAP 41in,50/BOX	5.40
	Y	350	TS9	0.11	PC	RUBBER TARP STRAP 9in,100/BOX	1.50
	Y	040	TSA1360	13.29	EA	TUBULAR SHAFT ASSEMBLY 60in	147.97
	Y	040	TSA1372	14.75	EA	TUBULAR SHAFT ASSEMBLY 72in	153.32
	Y	040	TSA760	12.16	EA	TUBULAR SHAFT ASSEMBLY	137.50
	Y	040	TSA772	11.20	EA	TUBULAR SHAFT ASSEMBLY	147.35
	N	634	TSCH025	0.28	EA	CLAMP TWIN SERIES 1/4in	6.45
	N	634	TSCH038	0.39	EA	CLAMP TWIN SERIES 3/8in HOSE	7.15
	N	634	TSCH050	0.24	EA	CLAMP TWIN SERIES 1/2in HOSE	7.15
	N	634	TSCH062	0.49	EA	CLAMP TWIN SERIES 5/8in HOSE	8.30
	N	634	TSCH075	0.48	EA	CLAMP TWIN SERIES 3/4in HOSE	8.30
	N	634	TSCH100	0.60	EA	CLAMP TWIN SERIES 1in HOSE	10.60
	N	634	TSCP025	0.29	EA	CLAMP TWIN SERIES 1/4in PIPE	6.45
	N	634	TSCP038	0.31	EA	CLAMP TWIN SERIES 3/8in PIPE	6.45
	N	634	TSCP050	0.38	EA	CLAMP TWIN SERIES 1/2in PIPE	7.15
	N	634	TSCP075	0.43	EA	CLAMP TWIN SERIES 3/4in PIPE	7.56
	N	634	TSCP100	0.63	EA	CLAMP TWIN SERIES 1in PIPE	10.60
	N	634	TSCP125	0.59	EA	CLAMP TWIN SERIES 1-1/4in PIPE	10.60
	N	634	TSCT025	0.21	EA	CLAMP TWIN SERIES 1/4in TUBE	5.75
	N	634	TSCT038	0.20	EA	CLAMP TWIN SERIES 3/8in TUBE	5.75
	N	634	TSCT062	0.30	EA	CLAMP TWIN SERIES 5/8in TUBE	6.45
	N	634	TSCT075	0.38	EA	CLAMP TWIN SERIES 3/4in TUBE	7.15
	N	634	TSCT087	0.57	EA	CLAMP TWIN SERIES 7/8in TUBE	7.15
	N	634	TSCT100	0.37	EA	CLAMP TWIN SERIES 1in TUBE	7.15
	N	634	TSCT125	0.63	EA	CLAMP TWIN SERIES 1-1/4in TUBE	10.60
	N	634	TSCT150	0.61	EA	STBD CLAMP TWIN SERIES 1-1/2in TUBE	10.60
	N	635	U0L3FE	0.62	EA	FILTER ELEMENT,10 MICRON FOR FHO SERIES	13.10
	N	635	U1L3FE	1.10	EA	FILTER ELEMENT,10 MICRON,15 GPM RETURN	11.45

Buyers Products Company * 9049 Tyler Blvd. * Mentor, OH 44060 *
*** F.O.B. Mentor, Ohio * $25.00 Minimum Order**

Price List in Effect on 12/1/2016 * For ALL Items in Catalogs * Marking NEW Pricing on Items Changed Since 11/1/2016

	N	635	U1L6FE	1.04	EA	FILTER ELEMENT, 25-MIC. 15 GPM RETURN	11.45
	N	635	U3L007	1.30	EA	FILTER BRACKET,UNIVERSAL	6.95
	N	635	U3L3FE	2.60	EA	ELEMENT,FILTER,10 MICRON,50GPM	27.90
	N	635	U3L6FE	2.10	EA	ELEMENT,FILTER,25 MIC,60 GPM	27.90
	N	635	U3LWF	17.00	EA	WETLINE-3 LINE KIT	198.15
	N	635	U3LWF3	20.00	EA	3 LINE KIT WITH 25 MICRON OVER/UNDER	288.95
	N	635	U3LWF4	22.00	EA	3 LINE KIT WITH 25 MICRON SIDE	353.80
	N	635	U5L3FE	1.09	EA	FILTER ELEMENT FOR HFA5 SERIES	28.66
	N	635	U5L6FE	1.09	EA	FILTER ELEMENT FOR HFA5 SERIES	28.66
	N	635	U9L3FE	0.48	EA	ELEMENT ONLY,10 MICRON FOR HFA91025	40.60
	N	635	U9L6FE	0.48	EA	ELEMENT ONLY,25 MICRON FOR HFA92525	40.60
	Y	760	UB623512	13.20	EA	U-BOLT KIT 12in,(4 EA)	35.78
	Y	760	UB623514	13.16	EA	U-BOLT KIT 14in,(4 EA)	38.68
	Y	760	UB623516	14.65	EA	U-BOLT KIT 16in,(4 EA)	40.76
	Y	760	UB623518	15.79	EA	U-BOLT KIT 18in,(4 EA)	43.66
	Y	760	UB623520	18.00	EA	U-BOLT KIT 20in,(4 EA) w/ 4inch n.c. thd	46.58
	Y	760	UB623522	18.70	EA	U-BOLT KIT 22in,(4 EA)	48.30
	Y	760	UB623524	20.00	EA	U-BOLT KIT 24in,(4 EA)	50.48
	N	638	UR35A	69.00	EA	RESERVOIR,HYDRAULIC,35 GAL,UPRT ALUMINUM	771.65
	N	638	UR50A	69.00	EA	RESERVOIR,HYDRAULIC,50GAL, UPRT ALUMINUM	800.10
	N	120	UR50MK	1.60	EA	MOUNT KIT FOR 50/70 UPRT TANKS	16.76
	N	638	UR50P	102.00	EA	RESERVOIR,HYDRAULIC 50 GALLON	689.55
	N	638	UR50S	151.00	EA	RESERVOIR,HYDRAULIC,50GAL,UPRT	592.76
	N	638	UR70A	151.00	EA	RESERVOIR,HYDRAULIC,70GAL,UPRT ALUMINUM	1,013.80
	N	638	UR70S	201.00	EA	RESERVOIR,HYDRAULIC,70GAL,UPRT	801.10
	N	537	UTVS16	57.50	EA	SPREADER,ATV,15 GALLON W/2in RECEIVER	518.50
	N	648	UWLK50ADMCCW	178.10	EA	WETLINE KIT ALUM RSVR DIRECT MT PUMP CCW	1,460.05
	N	648	UWLK50ADMCW	175.10	EA	WETLINE KIT ALUM RSVR DIRECT MT PUMP CW	1,460.05
	N	648	UWLK50DMCCW	271.00	EA	WETLINE KIT DIRECT MT.PUMP CCW	1,363.10
	N	648	UWLK50DMCW	271.00	EA	WETLINE KIT DIRECT MT.PUMP CW	1,363.10
	N	648	UWLK50PDMCCW	284.69	EA	WETLINE KIT,POLY DIRECT MOUNT	1,353.95
	N	648	UWLK50PDMCW	284.69	EA	WETLINE KIT,POLY DIRECT MOUNT	1,353.95
	N	648	UWLK70ADMCCW	193.10	EA	WETLINE KIT ALUM RES,DIRECT MT PUMP CCW	1,561.00
	N	648	UWLK70DMCCW	320.00	EA	WETLINE KIT 70 GAL.DIR.MT.PUMP	1,485.70
	N	648	UWLK70DMCW	320.00	EA	WETLINE KIT 70 GAL-DIR.MT.PUMP	1,485.70

Buyers Products Company * 9049 Tyler Blvd. * Mentor, OH 44060 *
*** F.O.B. Mentor, Ohio * $25.00 Minimum Order**

Price List in Effect on 12/1/2016 * For ALL Items in Catalogs * Marking NEW Pricing on Items Changed Since 11/1/2016

	Y	140	VCGT3100X06	1.94	EA	CABLE,VERNIER ADJ LKG CONT,6FT	52.30
	Y	140	VCGT3100X10	2.19	EA	CABLE,VERNIER ADJ LKG CONT,10FT	55.55
	Y	140	VCGT3100X15	2.63	EA	CABLE,VERNIER ADJ LKG CONT,15FT	60.50
	Y	140	VCGT3100X20	2.96	EA	CABLE,VERNIER ADJ LKG CONT,20ft	66.55
	Y	140	VCGT3100X25	3.28	EA	CABLE,VERNIER ADJ LKG CONT,25ft	70.55
	Y	140	VCGT3100X30	3.65	EA	CABLE,VERNIER ADJ LKG CONT,30ft	75.45
	Y	140	VCGTHO	1.00	EA	HEAD,CABLE (ONLY) VERN ADJ LKG	30.95
	Y	140	VCGTX06	2.25	EA	CABLE,VERNIER ADJ LKG CONT,6ft	52.30
	Y	140	VCGTX10	2.75	EA	CABLE,VERNIER ADJ LKG CONT,1Oft	55.55
	Y	140	VCGTX15	3.38	EA	CABLE,VERNIER ADJ LKG CONT,15ft	60.50
	Y	140	VCGTX20	4.00	EA	CABLE,VERNIER ADJ LKG CONT,20ft	66.55
	Y	140	VCGTX25	4.63	EA	CABLE,VERNIER ADJ LKG CONT,25ft	70.55
	Y	140	VCGTX30	5.00	EA	CABLE,VERNIER ADJ LKG CONT,30ft	75.45
	Y	140	VCGTX35	5.88	EA	CABLE,VERNIER ADJ LKG CONT,35ft	79.65
	N	633	VH1	0.33	EA	HANDLE & LINKAGE KIT FOR HV SERIES	25.00
	N	240	VSC1	3.20	EA	CONSOLE,VALVE SHIFT-HOLDS 1 EA	42.25
	N	240	VSC2	4.25	EA	CONSOLE,VALVE SHIFT HOLDS 2 EA	43.00
	N	240	VSC3	6.07	EA	CONSOLE,VALVE SHIFT-HOLDS 3 EA	44.31
	N	240	VSC4	6.00	EA	CONSOLE,VALVE SHIFT-HOLDS 4 EA	44.35
	N	290	VSK001	0.13	EA	KNOB,FOR B206301,3/8in-24 THD	3.80
	N	290	VSK040	0.13	EA	DECAL SHEET,40 MISC,FOR VSK001	8.00
	N	380	WC0888	15.00	EA	WHEEL CHOCK, LAMINATED, RUBBER	44.40
	N	380	WC091060	10.00	EA	WHEEL CHOCK,GRATING,GALVANIZED,SIZE	81.90
	N	380	WC091061	10.00	EA	WHEEL CHOCK,GRATING,GALVANIZED & ORANGE	87.90
	N	380	WC100609	4.50	EA	WHEEL CHOCK,MOTORCYCLE,10inLX6inWX9inH	38.80
	N	380	WC1085H	8.20	EA	WHEEL CHOCK,RBR,10X8X5,W/HANDLE	35.51
	N	380	WC1086	8.25	EA	WHEEL CHOCK,RUBBER,10inx8inx6in	26.25
	N	380	WC1086UWH	9.10	EA	WHEEL CHOCK,RUBBER W/U-SHAPED WIRE HDL	31.03
	N	380	WC1267	3.25	EA	WHEEL CHOCK,ALUMINUM,7inX6inX12in	51.95
	N	380	WC1467A	2.78	EA	WHEEL CHOCK,RUBBER 5inx6inx5in L	14.81
	N	380	WC1468A	4.40	EA	WHEEL CHOCK,RUBBER 5in x 6in x 8in L	20.42
	N	380	WC1588	7.25	EA	WHEEL CHOCK,ALUMINUM,8inX8inX15in	97.38
	N	380	WC181212	9.65	EA	WHEEL CHOCK,MOTORCYCLE,18LX12WX12H STEEL	38.80
	N	380	WC24483	6.00	PR	WHEEL CHOCK, W/ROPE,PR 4X4X8	36.60
	N	380	WC2556A	9.95	EA	WHEEL CHOCK, RUBBER 10inX7inX8in	39.90
	N	380	WC35225	1.67	PR	WHEEL CHOCK, MINI,RBR W/CORD,PR 3X5X2.25	12.90
	N	380	WC6096A	3.54	EA	WHEEL CHOCK,ALUMINUM,6 X 9 X 6 EXTRUDED	31.55
	N	380	WC6810L	7.46	EA	WHEEL CHOCK,RUBBER,6 X 8 X 10in	24.45

Buyers Products Company * 9049 Tyler Blvd. * Mentor, OH 44060 *
*** F.O.B. Mentor, Ohio * $25.00 Minimum Order**

Price List in Effect on 12/1/2016 * For ALL Items in Catalogs * Marking NEW Pricing on Items Changed Since 11/1/2016

	N	380	WC7118A	7.30	EA	WHEEL CHOCK,ALUM,EXTRUDED,7 X 11 X 8in	59.05
	N	380	WC765	1.50	EA	WHEEL CHOCK,ALUMINUM, 5inX6inX7in	23.15
	N	380	WC786	2.37	EA	WHEEL CHOCK,POLYURETHANE,2/BOX	32.25
	N	380	WC796R	9.69	EA	WHEEL CHOCK, RUBBER, 7X7X9.5	45.91
	N	380	WC8118	4.37	EA	WHEEL CHOCK,POLYURETHANE,FL ORN,2/BX	45.00
	N	380	WC8127	9.70	EA	WHEEL CHOCK,BLK PLASTIC,8 HX12 LX7 W	87.10
	N	380	WC9642Y	10.50	ST	WHEEL CHOCK,YEL RECYCLED PLSTC,9.5X6X4in	59.95
	N	380	WCB186	4.87	EA	BRACKET,WHEEL CHOCK,BLK	45.10
	N	522	WJ100WCB	0.27	EA	HOOD CATCH,BRACKET,HDWR,BAGGED	4.05
	N	522	WJ195	0.17	EA	HOOD CATCH/BRKT,RUBBER,4.0in	4.45
	N	522	WJ201A	0.32	EA	HOOD CATCH & BRACKET, RUBBER	4.65
	N	522	WJ201U	0.32	EA	HOOD CATCH&BRKT,RUBBER,STEM UP	4.65
	N	522	WJ202	0.13	EA	HOOD CATCH MINI RUBBER	3.95
	N	522	WJ205	0.43	EA	HOOD CATCH,RUBBER,6in,W/O NUB	9.80
	N	522	WJ205RO	0.25	EA	HOOD CATCH,REPLACEMENT RUBBER/PLASTIC	6.20
	N	522	WJ206	0.50	EA	HOOD CATCH,RUBBER,6in,W/NUB	9.80
	N	522	WJ206RO	0.25	EA	HOOD CATCH,REPLACEMENT RUBBER/PLASTIC	6.20
	N	522	WJ208	0.50	EA	HOOD CATCH,RUBBER,HD 8in	12.30
	N	522	WJ208RO	0.45	EA	HOOD CATCH,REPLACEMENT RUBBER/PLASTIC	8.45
	N	522	WJ211	0.50	EA	HOOD CATCH, RUBBER/PLASTIC	21.90
	N	510	WJ212	0.50	EA	LATCH,DRAW,PLASTIC,RUBBER	23.20
	N	510	WJ213	0.50	EA	LATCH,DRAW,PLASTIC,RUBBER,LONG	24.50
	N	522	WJ215	0.25	EA	LATCH,DRAW,PLASTIC, RUBBER	6.20
	N	522	WJ225	0.78	EA	LATCH,ADJUSTABLE DRAW,HEAVY DUTY	7.90
	N	522	WJ96WCB	0.31	EA	HOOD CATCH,90 DEGREE ELBOW BAGGED W/	3.95
	N	637	WLH075600	20.00	EA	HOSE, SUCTION 3/4inID X 50'LONG	387.20
	N	637	WLH100120	7.50	EA	HOSE,SUCTION 1inID X 10'LONG	86.70
	N	637	WLH100600	37.50	EA	HOSE, SUCTION 1inID X 50'LONG	387.20
	N	637	WLH10072	3.60	EA	HOSE, SUCTION 1inID X 6ft LONG	51.20
	N	637	WLH10096	4.68	EA	HOSE,SUCTION 1inID X 8'LONG	61.20
	N	637	WLH125120	4.50	EA	WETLINE HOSE 1-1/4inDIA. 10' LG	101.20
	N	637	WLH125144	9.00	EA	WETLINE HOSE 1-1/4inDIA.x12'LG.	112.25
	N	637	WLH125600	55.00	RL	HOSE,SUCTION 1-1/4inID X 50ft LG	460.80
	N	637	WLH12572	6.60	EA	HOSE,SUCTION 1-1/4inID X 6ft LONG	58.20
	N	513	WN5811Z	0.70	EA	NUT,WING,5/8in-11,ZINC PLATED	6.90

Catalog Price List for Pricing in

***** Marking NEW Pricing on Items**

For ALL Items in Catalogs

SAM Part Catalog

New	Combine	Category	Part	Weight	U of M	Description	List Price
	N	900	0020500	4.97	EA	PRO-WING, RUBBER EDGE	27.00
	N	903-5	0200600Y	6.00	EA	TGS-HOPPER COVER, YELLOW	101.05
	N	903-2	0202800	0.50	EA	SPINNER HUB W/ SET SCREW	23.00
	N	903-2	0203200	0.35	EA	SOCKET ASSY, TGS	33.20
	N	903-5	0203300	0.05	EA	PLUG,DUMMY TGS	4.40
	N	903-5	0203500	0.24	EA	HARNESS,WIRE W/PLUG FOR TGS01 SERV ONLY	20.08
	N	903-5	0203700	0.04	EA	WIRE ASSY,36IN LONG	3.90
	N	903-5	0204250	0.75	EA	WIRE ASSEMBLY,MOTOR PLUG,BAG FOR SERVICE	21.00
	N	903-5	0206500	1.75	EA	KIT,WIRE HARNESS FOR TGS01/TGS01A/	69.20
	N	903-5	0206501	1.75	EA	HARNESS,WIRE KIT TGS05/TGS05A/TGS05B	69.00
	N	903-5	0207005	48.11	EA	MOUNT,2in RECEIVER TUBE,TGS01B/05B,	317.90
	N	903-1	0207100	0.50	EA	LIGHT,LD AUXILIARY BRAKE (12)W/LOGIC	30.30
	N	903-5	0208000A	4.00	EA	AUGER ASSEMBLY TGS01, TGSUVPRO SERIES	87.35
	N	903-5	0208360	5.00	EA	SHAFT, TGS05 SPINNER	42.00
	N	903-5	0208430	1.00	EA	BEARING,5/8in 4-HOLE TGSO5/5A CTRS 2.125	44.75
	N	903-5	0208460	0.03	EA	BUSHING, TGS05 AUGER	6.55
	N	903-5	0208470	0.50	EA	COUPLING, SHAFT TGS05	27.40
	N	903-5	0208470A	0.24	EA	COUPLING, SHAFT 1/2in BORE ASSY	10.65
	N	903-5	0208470B	0.22	EA	COUPLING 5/8in BORE ASSY	10.65
	N	903-5	0208470C	0.01	EA	SPIDER, SOLID CENTER	6.10
	N	903-5	025000A	53.00	EA	WINTERGATE,SPRDR MNT,TGS05A/B & TGS01A/B	456.00
	Y	901	1301005	49.00	EA	CUTTING EDGE 78inx 6.0in x .375	96.83
	Y	901	1301010	46.00	EA	CUTTING EDGE 72inx 6.0in x .375	125.95
	Y	901	1301015	49.00	EA	CUTTING EDGE 78inx 6.0in x .375	106.00
	Y	901	1301016	66.20	EA	CUTTING EDGE 78inx 6.0in x .500	160.00
	Y	901	1301020	53.00	EA	CUTTING EDGE 84inx 6.0in x .375	104.25
	Y	901	1301021	71.00	EA	CUTTING EDGE 84inx 6.0in x .500	137.00
	Y	901	1301025	57.00	EA	CUTTING EDGE 90inx 6.0in x .375	110.73
	Y	901	1301030	76.00	EA	CUTTING EDGE 90inx 6.0in x .500	137.88
	Y	901	1301035	81.00	EA	CUTTING EDGE 96inx 6.0in x .500	147.08

Catalog Price List for Pricing in

*** Marking NEW Pricing on Items

For ALL Items in Catalogs

	Y	901	1301040	86.00	EA	CUTTING EDGE 102inx 6.0in x .500	156.28
	Y	901	1301045	91.00	EA	CUTTING EDGE 108inx 6.0in x .500	162.51
	Y	901	1301050	101.00	EA	CUTTING EDGE 120inx 6.0in x .500	177.40
	N	900	1301055	1.04	ST	BOLTS, CARRIAGE SET OF 6, 1/2 IN X 2	15.00
	N	900	1301060	1.64	EA	BOLT,CRG W/LKG NUT,1/2 X 2,SETOF	10.95
	N	900	1301061	1.82	EA	BOLT,CRG W/LKG NUT,1/2 X 2,(10)/SET	14.22
	N	900	1301062	1.64	ST	BOLT,CRG W/LKG NUT,1/2X3-	20.00
	N	900	1301064	3.25	EA	BOLT,CRG W/LKG NUT,5/8 X 2,SET OF	22.02
	N	900	1301065	3.46	ST	BOLTS,CRG,W/LKG NUT,5/8X2-1/2inSet	23.34
	N	900	1301066	4.42	EA	BOLT,CRG W/LKG NUT 5/8X2.5 SET OF	33.78
	N	900	1301068	5.08	EA	BOLT,CRG W/LKG NUT 5/8X3.5 SET OF	30.00
	Y	901	1301100	14.00	EA	STBD CUTTING EDGE 18inx 6.0in x .500	55.00
	Y	901	1301105	38.00	EA	CUTTING EDGE 45inx 6.0in x .500	92.45
	Y	901	1301110	43.00	EA	CUTTING EDGE 51inx 6.0in x .500	105.30
	Y	901	1301200	49.00	EA	CUTTING EDGE 78inx 6.0in x .375	102.20
	Y	901	1301210	54.00	EA	CUTTING EDGE 84inx 6.0in x .375	108.03
	Y	901	1301215	57.00	EA	CUTTING EDGE 90inx 6.0in x .375	120.25
	Y	901	1301220	61.00	EA	CUTTING EDGE 96inx 6.0in x .375	172.60
	Y	901	1301225	86.00	EA	CUTTING EDGE 102inx 6.0in x .500	156.28
	Y	901	1301230	76.00	EA	CUTTING EDGE 90inx 6.0in x .500	120.25
	Y	901	1301235	81.00	EA	CUTTING EDGE 96inx 6.0in x .500	147.08
	Y	901	1301240	92.00	EA	CUTTING EDGE 108inx 6.0in x .500	165.46
	Y	901	1301245	46.00	EA	CUTTING EDGE 72inx 6.0in x .375	130.60
	Y	901	1301250	49.00	EA	CUTTING EDGE 78inx 6.0in x .375	102.20
	Y	901	1301255	53.00	EA	CUTTING EDGE 84inx 6.0in x .375	151.60
	Y	901	1301260	57.00	EA	CUTTING EDGE 90inx 6.0in x .375	162.10
	Y	901	1301265	81.00	EA	CUTTING EDGE 96inx 6.0in x .500	147.08
	Y	901	1301270	87.00	EA	CUTTING EDGE 102inx 6.0in x .500	242.55
	Y	901	1301275	92.00	EA	CUTTING EDGE 108inx 6.0in x .500	162.51
	Y	901	1301280	101.00	EA	CUTTING EDGE 120inx 6.0in x .500	177.40
	Y	901	1301281	126.00	EA	CUTTING EDGE 120inx 6.0in x .625	214.60
	Y	901	1301290	57.00	EA	CUTTING EDGE 90inx 6.0in x .375	125.60
	Y	901	1301291	61.00	EA	CUTTING EDGE 96inx 6.0in x .375	147.08
	Y	901	1301292	75.00	EA	CUTTING EDGE 90inx 6.0in x .500	137.88
	Y	901	1301293	81.00	EA	CUTTING EDGE 96inx 6.0in x .500	147.08
	Y	901	1301294	74.00	EA	CUTTING EDGE 90inx 6.0in x .500	140.44
	Y	901	1301295	81.00	EA	CUTTING EDGE 96inx 6.0in x .500	149.80
	Y	901	1301296	86.00	EA	CUTTING EDGE 102inx 6.0in x .500	159.18
	Y	901	1301297	92.00	EA	CUTTING EDGE 108inx 6.0in x .500	168.53
	Y	901	1301300	57.00	EA	CUTTING EDGE 90inx 6.0in x .375	110.73
	Y	901	1301301	95.00	EA	CUTTING EDGE 90inx 6.0in x .625	286.40
	Y	901	1301302	76.20	EA	CUTTING EDGE 90inx 6.0in x .500in	137.88
	Y	901	1301303	76.20	EA	CUTTING EDGE 90inx 6.0in x .500in	147.61
	Y	901	1301305	81.00	EA	CUTTING EDGE 96inx 6.0in x .500	147.08
	Y	901	1301306	101.00	EA	CUTTING EDGE 96inx 6.0in x .625	305.45
	Y	901	1301307	81.30	EA	CUTTING EDGE 96inx 6.0in x .500in	147.08
	Y	901	1301308	86.30	EA	CUTTING EDGE 102inx 6.0in x .500in	156.28
	Y	901	1301309	86.30	EA	CUTTING EDGE 102inx 6.0in x .500in	156.28
	Y	901	1301310	91.00	EA	CUTTING EDGE 108inx 6.0in x .500	162.51
	Y	901	1301311	114.00	EA	CUTTING EDGE 108inx 6.0in x .625	343.65

Catalog Price List for Pricing in

*** Marking NEW Pricing on Items

For ALL Items in Catalogs

	Y	901	1301312	91.40	EA	CUTTING EDGE 108inx 6.0in x .500in	165.46
	Y	901	1301315	101.00	EA	CUTTING EDGE 120inx 6.0in x .500	177.40
	N	900	1301350	1.64	EA	BOLT,CRGW/LKNT,1/2 X 2	16.00
	N	900	1301355	3.44	EA	BOLT,CRG,W/LKNT,5/8X 2.5	40.00
	N	900	1301800	10.00	EA	GUARD,CURB,DRIVERS	72.95
	N	900	1301805	10.00	EA	GUARD,CURB,CURB	72.95
	N	900	1301815	11.00	EA	GUARD,CURB,6x1/2 IN UNIV	69.30
	N	900	1301816	13.68	EA	GUARD,CURB,8x1/2 IN UNIV	91.75
	N	900	1301818	22.50	EA	GUARD,CURB,6 & 8x5/8 IN UNIV	113.80
	N	900	1302005	0.62	EA	EYE BOLTS W/NUTS,REPLACES	6.50
	N	900	1302006	1.00	EA	*DISCONTINUED RPLCD BY 1302005*	
	N	900	1302010	6.00	EA	TRIP SPRING (M),REPLACES MEYER	22.50
	N	900	1302015	3.97	EA	TRIP SPRING COMPACT,REPLACES	26.55
	N	900	1302020	0.39	EA	BOLT,KING, ASSY 5/8in,REPLACES	6.00
	N	900	1302025	0.64	EA	BOLT,KING ASSY 3/4in,REPLACES	8.00
	N	900	1302030	2.35	EA	PIVOT PIN(2) W/COTTER,REPLACES	18.57
	N	900	1302031	2.49	EA	PIVOT PIN(2) W/GR FIT,ZINC REPLACES	24.18
	N	900	1302035	1.33	EA	TUBE,(2) PIVOT PIN,REPLACES MEYER	20.00
	N	900	1302040	0.48	EA	WASHER FOR TUBE (2 PCS),REPLACES	4.24
	N	900	1302045	1.50	EA	HINGE PINS W/CLIPS (2),REPLACES	8.80
	N	900	1302047	2.00	EA	PIN,CONNECTING, BLUE	20.65
	N	900	1302049	2.00	EA	PIN,CONNECTING,YELLOW	20.65
	N	900	1302060	0.79	EA	LOCK,PIN 5/8in x 2-3/8in W/BAG/HDR	26.00
	N	900	1302061	2.20	EA	LOCK,PIN 5/8in X 3in W/BAG/HDR CARD	26.00
	N	900	1302097	8.25	EA	EMERGENCY PARTS KIT,MEYER 08824	87.30
	N	900	1302100	3.20	EA	PIN, HINGE, 1-3/16in x 9-1/2in	28.30
	N	900	1302110	1.08	EA	TRIP EDGE PIN 1-3/16inX2-	18.89
	N	900	1302115	3.56	EA	R.H. TORSION SPRING,REPLACES	32.50
	N	900	1302120	3.61	EA	LH TORSION SPRING,REPLACES	32.50
	N	900	1302135	0.73	EA	STBD LIFT CYLINDER PIN,1inX3-1/16in,	9.30
	N	900	1302140	0.91	EA	CYLINDER PIN 1inX4in,REPLACES	17.20
	N	900	1302150	1.19	EA	RELEASE HOOK, REPLACES DIAMOND	15.85
	N	900	1302155	1.30	EA	CYLINDER PIN 1inX6in,REPLACES	13.25
	N	900	1302160	2.64	EA	SPRING DBL. TORSION,REPLACES	37.10
	N	900	1302205	6.00	EA	TRIP SPRING (W),REPLACES WESTERN	20.70
	N	900	1302210	0.34	EA	SCREW,CAP 3/4inX1-	10.72
	N	295	1302215	0.10	EA	NUT,HEX SLOT 3/4-10 ZN,REPLACES	1.80
	N	900	1302220	0.54	EA	RIVET 3/4in X 4in (INDV PKG),	4.35
	N	900	1302225	0.54	EA	RIVET 3/4in X3-1/2in,REPLACES	4.35
	N	900	1302230	0.99	EA	RIVET 1in X 4in,REPLACES WESTERN	6.65
	N	900	1302235	1.00	EA	RIVET 1in X 3-1/2in(INDV PKG)	6.65
	N	900	1302240	1.21	EA	RIVET 1in X 5in,REPLACES WESTERN	8.30
	N	900	1302245	1.50	EA	HITCH PIN,W/HAIRPIN COTTER	5.80
	N	900	1302247	0.43	EA	PIN,1/2in X 5.5in, REPLACES WESTERN	7.90
	N	295	1302250	0.04	EA	COTTER PIN 5/32 X 1-1/2in REPLACES	0.28
	N	900	1302252	0.06	EA	COTTER,HAIR PIN,5/32in REPLACES	0.90
	N	900	1302255	0.04	EA	HAIRPIN COTTER-5/32X3 OAL	0.63
	N	900	1302256	0.08	EA	HAIRPIN COTTER,(2-PACK),5/32 X 3in	1.24
	N	900	1302260	0.01	EA	GROOVE PIN 3/16in X 1-1/4in REPLACES	0.35
	N	900	1302297	8.25	EA	EMERGENCY PARTS KIT,REPLACES	99.99

Catalog Price List for Pricing in

*** Marking NEW Pricing on Items

For ALL Items in Catalogs

	N	900	1302300	0.31	EA	PIN,CLEVIS, W/ COTTER,REPLACES	1.60
	N	900	1302305	8.40	EA	TRIP SPRING ASSY,REPLACES FISHER	44.25
	N	900	1302308	0.11	EA	BOLT, HH SHLDR 7/16-14 ZN, REPLACES	1.00
	N	900	1302309	0.02	EA	NUT, JAM, CENTER LOCK, 7/16-14, ZN	0.30
	N	900	1302310	5.50	EA	TRIP SPRING (F),REPLACES FISHER	18.60
	N	900	1302315	3.28	EA	SPRING BAR,RPLACES FISHER #6631 &	23.75
	N	900	1302319	0.58	EA	PIN,STEP, 1in X 3/4in X 2-9/16in LG,ZINC	6.10
	N	900	1302320	0.88	EA	PIN,CLEVIS,SHK DIA 1.000,OAL 3.250	3.20
	N	900	1302322	3.61	EA	PIN,HINGE 1in x 16IN	22.00
	N	900	1302323	3.69	EA	PIN,HINGE 13/16 X 29-9/16	26.10
	N	900	1302325	1.00	EA	ANCHOR PIN 1x4 W/COTTER REPLACES	4.00
	N	900	1302327	1.16	EA	PIN,CYLINDER 1in X 4-3/4in	6.10
	N	900	1302328	0.15	EA	CLEVIS PIN,3/8x3-1/4in REPLACES	1.70
	N	900	1302330	1.78	EA	CONNECTING PIN ASSY REPLACES	8.00
	N	900	1302335	1.69	EA	CONNECTING PIN,REPLACES FISHER	5.80
	N	900	1302340	0.06	EA	SPRING,REPLACES FISHER #821	1.20
	N	900	1302345	0.10	BG	RING RETAINER 1inID,(10	8.80
	N	900	1302347	0.30	EA	COTTER PIN,1/4inX2inZINC (10PCS)	2.00
	N	900	1302350	1.78	EA	PIVOT PIN W/COTTER PIN,REPLACES	6.40
	N	900	1302355	0.04	BG	SNAP RING 7/8in(10 PCS/BG) REPLACES	15.70
	N	900	1302360	0.14	EA	CLEVIS, U-BOLT W/NUTS,REPLACES	3.80
	N	900	1302365	1.19	EA	ROD, DISCONNECT A FRAME,	24.50
	N	900	1302370	1.98	EA	PIN, 1-1/4inx5-1/2in (F),REPLACES	17.50
	N	900	1302375	1.73	EA	PIN,1-1/4inx4-3/4in,10ft (F), REPLACES	13.50
	N	900	1302397	8.25	EA	EMERGENCY PARTS KIT, REPLACES	87.30
	N	900	1303002	6.80	EA	SHOE ASSY,STD,REPLACES MEYER	50.72
	N	900	1303003	13.79	EA	SHOE ASSY,STD,REPLACES MEYER	74.80
	N	900	1303005	8.94	EA	SHOE ASSY. ST-78/C-8.5, REPLACES	29.35
	N	900	1303010	15.65	EA	SHOE ASSY M-9/M-10,REPLACES	55.90
	N	900	1303015	4.89	EA	RUNNER ONLY ST-78/C-8.5,REPLACES	26.20
	N	900	1303020	12.82	EA	RUNNER ONLY M-9/M-10, REPLACES	45.00
	N	900	1303025	3.60	EA	SPINDLE ONLY ST-78/M-10, REPLACES	16.00
	N	900	1303030	1.00	PK	LINCH PIN 7/16 IN, 10/PK,REPLACES	10.50
	N	900	1303031	0.50	PK	LINCH PIN, 1/4 IN, 10 PACK, REPLACES	9.90
	N	900	1303032	0.24	EA	LINCH PIN,7/16(2-PACK)REPLACES	2.45
	N	900	1303033	0.13	EA	LINCH PIN,1/4(2-PACK) REPLACES	2.25
	N	900	1303035	0.80	PK	WASHER, FL 1 1/4 X 2 1/4, ZN, 10 PACK	5.95
	N	900	1303100	10.20	EA	SHOE,ANTI-WEAR,ASSY, REPLACES	60.90
	Y	529	1303111	1.13	EA	PIN,HITCH 3/4in W/LINCH PIN ZINC	10.30
	N	900	1303200C	9.00	EA	SHOE ASSY,STD REPLACES WESTERN	26.50
	N	900	1303200CBUL	9.00	EA	SHOE ASSY,LIGHT DUTY,LESS LABEL	
	N	900	1303203	3.14	EA	PLOW STAND,REPLACES WESTERN	24.70
	N	900	1303204	0.29	EA	PIN,STAND LOCK,REPLACES WESTERN	9.35
	N	900	1303205	0.05	EA	WASHER,1.06 X 1.75	0.50
	N	900	1303206	1.60	EA	PLOW STAND, ULTRA	33.84
	N	900	1303207	0.02	EA	PIN,SPRING,SLOTTED,REPLACES	1.10
	N	900	1303210	0.50	EA	SPACER,SHOE 1-1/2in LONG, WESTERN	3.32
	N	900	1303215	0.10	EA	LYNCH PIN(QUICK PIN)7/16inX1-	0.80
	N	900	1303220	9.23	EA	SHOE ASSY,HD (CASTING),REPLACES	39.30
	N	900	1303230	7.50	EA	SHOE ASSEMBLY, WESTERN	30.60

Catalog Price List for Pricing in

*** Marking NEW Pricing on Items

For ALL Items in Catalogs

	N	900	1303300	7.90	EA	SHOE ASSEMBLY, 6in, ANTI-	28.00
	N	900	1303305	11.19	EA	SHOE ASSY,7in ANTI-WEAR REPLACES	42.00
	N	900	1303310	1.64	EA	SHOE TUBE HOLDER,REPLACES	7.50
	N	900	1303315	0.08	EA	RING,SPACER, 1.5inID	0.80
	N	900	1303320	0.10	EA	PIN, SHOE LYNCH,7/16 X 2,REPLACES	0.80
	N	900	1303500	2.15	EA	BOLT,CARRIAGE	14.40
	N	900	1303505	11.05	EA	SHOE ASSY HD PLOW,W/7.871N POST	51.25
	Y	901	1303510	51.00	EA	CUTTING EDGE 80inx 6.0in x .375	140.54
	Y	901	1303515	76.00	EA	CUTTING EDGE 90inx 6.0in x .500	150.26
	Y	901	1303520	81.00	EA	CUTTING EDGE 96inx 6.0in x .500	160.28
	Y	901	1303530	51.00	EA	CUTTING EDGE 80inx 6.0in x .375	145.06
	Y	901	1303535	57.00	EA	CUTTING EDGE 90inx 6.0in x .375	154.48
	Y	901	1303536	76.00	EA	CUTTING EDGE 90inx 6.0in x .500	150.26
	Y	901	1303540	61.00	EA	CUTTING EDGE 96inx 6.0in x .375	164.74
	Y	901	1303542	194.00	EA	CUTTING EDGE 144inx 8.0in x .625	354.50
	Y	901	1303543	81.00	EA	CUTTING EDGE 96inx 6.0in x .500	160.28
	N	900	1303550	15.30	EA	CYLINDER, LIFT, 1-1/2X 4in, REPLACES	254.60
	N	900	1303554	17.00	EA	CYLINDER, ANGLE, 2-1/4 X	296.41
	N	900	1303557	11.50	EA	CYLINDER, ANGLE,1-1/2 X11-	179.87
	N	900	1303560	0.50	EA	HOSE,1/4inX16in,REPLACES SNO-	34.18
	N	900	1303561	0.55	EA	HOSE,1/4inx20in,REPLACES SNO-	40.43
	N	900	1303562	0.50	EA	HOSE,1/4inx16.5in,REPLACES SNO-WAY	34.91
	N	900	1303563	0.66	EA	stbd HOSE,3/8inX27in,REPLACES	63.28
	N	900	1303564	0.70	EA	HOSE,3/8inX28.5in,REPLACES SNO-WAY	58.07
	N	900	1303565	0.74	EA	HOSE,1/4inX32in,REPLACES SNO-	36.53
	N	900	1303580	9.90	EA	stbd TRIP SPRING,REPLACES SNO-WAY	41.90
	N	900	1303585	0.50	EA	RELAY-SOLENOID HYD SYS REPLACES	16.50
	N	900	1303590	16.75	EA	MOTOR,DC CW ROT,9-SPLINE	171.30
	N	900	1303600	15.95	EA	MOTOR,DC,4-1/2inCCW,TANG SHAFT	171.30
	N	900	1303700	13.30	EA	CYLINDER, LIFT, 1.500X 3.87in,	258.84
	N	900	1304000	4.50	EA	LIFT ARM,PLOW,REPLACES MEYER	54.24
	N	900	1304005	13.00	EA	CYLINDER, ANGLE,1-1/2X10in,	105.00
	N	900	1304006	12.53	EA	CYLINDER, ANGLE,1-1/2 X10in,	145.74
	N	900	1304010	15.00	EA	CYLINDER, ANGLE, 1-1/2X12in,	164.00
	N	900	1304015	22.00	EA	CYLINDER, ANGLE,	159.95
	N	900	1304020	10.00	EA	LIFT CYLINDER,1-1/2inX6in,REPLACES	153.00
	N	644	1304021	0.08	EA	COUPLER, MALE HOSE,1/4in	9.00
	N	647	1304022	0.25	EA	COUPLER,FEMALE HALF 1/4in	16.70
	N	902	1304024	0.09	EA	ADAPTOR FOR MEYER COUPLER 22293	11.30
	N	900	1304025	0.34	EA	QUICK COUPLER,1/4in HYD,REPLACES	12.47
	N	900	1304026	34.00	BX	QUICK COUPLER 1/4in BULK	1,230.00
	N	900	1304027	0.75	EA	COUPLER, MALE/FEMALE MALE 3/4-16	39.95
	N	900	1304028	0.14	EA	MALE 3/4-16 VLV BLOCK SIDE LOW	19.24
	N	900	1304028C	0.40	EA	COUPLER,FEMALE HOSE	46.20
	N	900	1304029	0.22	EA	COUPLER,FEMALE 3/4-16 VLV BLOCK	35.90
	N	900	1304029C	0.30	EA	MALE HOSE,1/4in NPT FEMALE BLOCK	43.65
	N	900	1304030	0.50	EA	HOSE,45inW/SWIVEL(INDIV.BAGGED)	24.32
	N	900	1304031	50.00	BX	HOSE, 45 IN SWIVEL (BULK 100/BOX)	1,462.00
	N	900	1304033	0.34	EA	HOSE-1/4inX45in MPR X FPR,REPLACES	19.99
	N	900	1304035	2.00	EA	HOSE,65in W/SWIVEL(INDV BAG)	20.40

Catalog Price List for Pricing in

*** Marking NEW Pricing on Items

For ALL Items in Catalogs

	N	900	1304040	0.83	EA	70in HOSE W/2 SWIVELS,REPLACES	33.23
	N	900	1304041	0.74	EA	HOSE, HYDRAULIC 1/4 x 33in,REPLACES	29.11
	N	900	1304042	0.80	EA	HOSE, HYDRAULIC 1/4 x 39in,	34.40
	N	900	1304050	0.66	EA	HOSE 70in W/SWIVEL(INDV	30.49
	N	900	1304055	0.25	EA	SWIVEL ELL 90 DEGREE(INDV	7.99
	N	900	1304056	25.00	BX	SWIVEL ELL 90 DEG (BULK	799.00
	N	900	1304060	2.06	EA	HOSE,ANGLE REPLACEMENT KIT	78.99
	N	900	1304100	14.00	EA	CYLINDER, 10in STROKE,17.25in CTOC	157.00
	N	900	1304105	0.56	EA	HOSE,1/4inNPT ENDSX34in(IND BAG)	18.75
	N	900	1304110	0.65	EA	HOSE,1/4inNPT ENDSX40in(IND BAG)	19.25
	N	900	1304115	0.68	EA	HOSE,1/4inNPT ENDSX45in(IND BAG)	21.50
	N	900	1304120	0.80	EA	HOSE,1/4inNPTX56in(INDV	22.55
	N	900	1304125	0.91	EA	HOSE,1/4inNPTX64in(INDV	24.65
	N	900	1304135	0.12	EA	ELBOW,1/4in MALE,90	6.72
	N	900	1304140	0.11	EA	SWIVEL,1/4inMALE, 45	6.90
	N	900	1304145	0.13	EA	SWIVEL,1/4inMALE, 90	6.90
	N	900	1304200	13.45	EA	POWER ANGLING CYL,OLD 1-1/2X10	100.50
	N	900	1304201	11.70	EA	CYLINDER, LIFT, 1-1/2x8in, REPLACES	95.04
	N	900	1304202	13.20	EA	CYLINDER, ANGLE,1-1/2x10in,	105.80
	N	900	1304203	14.60	EA	CYLINDER, ANGLE,1-1/2x12in,	109.80
	N	900	1304204	21.90	EA	CYLINDER, ANGLE, 2.000x11in,	247.15
	N	900	1304205	13.83	EA	CYLINDER, ANGLE, 1-1/2X10,	99.80
	N	900	1304210	10.00	EA	CYLINDER, LIFT, 1-1/2X 6in BLACK,	95.08
	N	900	1304215	17.14	EA	CYLINDER, LIFT, 2.000X 6in BLACK,	155.70
	N	900	1304217	15.00	EA	CYLINDER, ANGLE, 2.000X10in,	268.60
	N	900	1304220	29.40	EA	CYLINDER,	178.80
	N	900	1304225	0.34	EA	HOSE,HIGH PRESSURE 1/4inx38in	9.98
	N	900	1304226	61.00	BX	HIGH PRESSURE HOSE	938.70
	N	900	1304227	0.82	EA	HOSE 1/4inx42in W/FJIC ENDS	26.42
	N	900	1304229	0.50	EA	HOSE 1/4inx16in W/FJIC ENDS	18.27
	N	900	1304230	0.07	EA	NIPPLE,1/4in HEX,REPLACES WESTERN	2.40
	N	900	1304231	0.25	EA	HOSE 1/4inx 8in W/FJIC ENDS	13.19
	N	900	1304232	0.37	EA	HOSE 1/4inx12in W/FJIC ENDS	15.26
	N	900	1304233	0.37	EA	HOSE 1/4inx22in W/FJIC ENDS	21.82
	N	900	1304234	0.76	EA	HOSE 1/4inx36in W/FJIC ENDS	23.19
	N	900	1304235	0.15	EA	ELBOW,STREET 1/4in X 90 DEGREES	3.37
	N	900	1304236	0.82	EA	HOSE 3/8inx38in W/FJIC ENDS	22.28
	N	900	1304237	0.96	EA	HOSE 3/8inx45in W/FJIC ENDS	27.48
	N	900	1304238	0.15	EA	ELBOW,90 DEGREE-6M O-	3.59
	N	900	1304239	0.25	EA	ELBOW,LONG,90 DEGREE,6M,O-	4.47
	N	900	1304240	0.13	EA	ELBOW,MALE 1/4in x 90 DEGREES	4.65
	N	900	1304241	0.20	EA	FLARE,MALE TO 1/4in MALE,NPTF	2.22
	N	900	1304245	0.19	EA	MALE EL-1/4inx90-EXTRA LG(INDV PKG)	5.03
	N	900	1304250	0.21	EA	STREET EL,SPECIAL,1/4inx90	5.30
	N	900	1304260	1.94	EA	HOSE,ANGLE REPLACEMENT	72.15
	N	900	1304290	4.50	EA	LIFT ARM,PLOW,REPLACES WESTERN	43.80
	N	900	1304300	15.00	EA	ANGLING CYL.1-1/2inx12in,BLK	93.40
	N	900	1304301	35.00	BX	ANGLING HOSE 36 IN H.P. (BULK	1,682.00
	N	900	1304305	14.00	EA	CYLINDER, 10in STROKE,17.25 in CTOC	106.17
	N	900	1304307	69.00	BX	HOSE,1/4in x 42in w/NPT MPR ENDS	2,100.00

Catalog Price List for Pricing in

*** Marking NEW Pricing on Items

For ALL Items in Catalogs

	N	900	1304310	29.00	EA	ANGL.CYL.2inx16in W/1.25in PIN HOLE	254.00
	N	900	1304311	10.10	EA	CYLINDER, LIFT, 1-1/2x 6in, REPLACES	101.53
	N	900	1304312	14.60	EA	CYLINDER, ANGLE,1-1/2X12in,	116.47
	N	900	1304315	0.17	EA	SWIVEL ADAPTER 1/4in X 90 DEG	3.25
	N	900	1304320	0.06	EA	NIPPLE HEX 1/4in,REPLACES FISHER	2.50
	N	900	1304325	0.36	EA	DISCONNECT ASSY-QUICK 1/4	12.47
	N	900	1304330	0.05	EA	DUST PLUG,CLOS,MALE,RBR	4.90
	N	900	1304335	0.19	EA	ADAPTOR,SWIVEL (SHORT) 90 DEG	5.80
	N	900	1304340	0.36	EA	ANGLING HOSE,1/4inPx1/4inPx38inLG	17.66
	N	900	1304345	0.13	EA	BRASS STREET ELBOW,1/4inx90DEG	5.60
	N	627	1304347	0.58	EA	HOSE ASSY,36in,REPLACES	22.68
	N	627	1304348	0.50	EA	HOSE ASSY,32in,REPLACES	20.16
	N	900	1304350	0.11	EA	STREET ELBOW,1/4inx90DEG,BRASS	6.85
	N	900	1304400	1.67	EA	PIN,PIVOT,DS,REPLACES WESTERN	27.54
	N	900	1304401	1.67	EA	PIN,PIVOT,PS,REPLACES WESTERN	27.54
	N	900	1304402	2.87	EA	MOUNTING PLATE,FLAP,MVP,DS	31.88
	N	900	1304403	2.87	EA	MOUNTING PLATE,FLAP,MVP,PS	31.88
	N	900	1304406	13.80	EA	RECEIVER,DS,REPLACES WESTERN	126.80
	N	900	1304407	13.80	EA	RECEIVER,PS,REPLACES WESTERN	126.80
	N	900	1304408	4.50	EA	SHOCK ABSORBER,REPLACES	78.30
	N	900	1304410	9.00	EA	KIT,CENTER FLAP,MVP&EZ-V PLOW	97.76
	N	900	1304420	15.80	EA	PIVOT BAR, REPLACES WESTERN	169.00
	N	900	1304420HDW	2.23	EA	PIVOT BAR, HDW KIT, REPLACES	31.28
	N	900	1304505	14.00	EA	CYLINDER, 1-1/2x10in, REPLACES	100.40
	N	900	1304510	18.00	EA	CYLINDER, 2.000X10in, REPLACES	207.10
	N	900	1304512	32.00	EA	CYLINDER, 3.000X10in, DA, REPLACES	414.00
	N	900	1304514	42.40	EA	CYLINDER, 4.000X10in, DA REPLACES	547.48
	N	900	1304515	33.00	EA	CYLINDER, 2-1/2X10in, REPLACES	223.60
	N	900	1304520	46.00	EA	CYLINDER, 3.000X10in, REPLACES	282.10
	N	900	1304530	32.16	EA	CYLINDER, 2-1/2X10in, REPLACES	259.90
	N	900	1304535	42.65	EA	CYLINDER, 3.000X10in, REPLACES	336.45
	N	900	1304545	25.83	EA	CYLINDER, 3.000X 9-1/2in, REPLACES	329.40
	N	900	1304550	26.50	EA	CYLINDER, 3.000X10in, REPLACES	296.00
	N	900	1304555	39.50	EA	CYLINDER, 4.000X10in, REPLACES	547.50
	Y	901	1304600	75.50	EA	CUTTING EDGE 89inx 6.0in x .500	170.67
	Y	901	1304601	80.20	EA	CUTTING EDGE 94.5inx 6.0inx .500,	181.21
	Y	901	1304602	100.00	EA	CUTTING EDGE 94.5inx 6.0inx .625	250.61
	Y	901	1304603	76.00	EA	CUTTING EDGE 90inx 6.0in x .500	172.58
	Y	901	1304604	81.00	EA	CUTTING EDGE 96inx 6.0in x .500	184.09
	Y	901	1304605	86.00	EA	CUTTING EDGE 102inx 6.0in x .500	195.60
	Y	901	1304606	57.00	EA	CUTTING EDGE 90inx 6.0in x .375	156.06
	N	900	1304622	6.00	EA	TRIP SPRING, REPLACES BLIZZARD	20.16
	N	900	1304623	3.50	EA	SPRING,EXT,REPLACES BLIZZARD	19.94
	N	900	1304627	0.82	EA	HOSE 1/4inx42in W/FJIC ENDS	26.42
	N	900	1304630	0.60	EA	HOSE, 3/8 x 24inREPLACES BLIZZARD	15.80
	N	900	1304631	0.65	EA	HOSE,3/8 x 26in,REPLACES BLIZZARD	16.40
	N	900	1304632	0.76	EA	HOSE,3/8 x 36in,REPLACES BLIZZARD	21.92
	N	900	1304633	0.55	EA	HOSE,3/8 x 17in,REPLACES BLIZZARD	24.84
	N	900	1304634	0.47	EA	HOSE,3/8 x 15in,REPLACES BLIZZARD	23.76
	N	900	1304640	19.45	EA	CYLINDER, ANGLE, 2.000 X	241.98

Catalog Price List for Pricing in

*** Marking NEW Pricing on Items

For ALL Items in Catalogs

	N	900	1304641	18.52	EA	CYLINDER, ANGLE,2.000 X 9-	236.93
	N	900	1304642	27.69	EA	CYLINDER, ANGLE, 2-1/4 X	269.24
	N	900	1304643	16.37	EA	CYLINDER, LIFT, 2-1/2 X 4-	224.34
	N	900	1304644	24.20	EA	CYLINDER, LIFT, 3-1/2 X 4-	308.73
	N	900	1304645	21.15	EA	CYLINDER, LIFT, 3.000 X 4-	254.55
	N	900	1304646	16.97	EA	CYLINDER, SIDE BOX, 1-1/2 X13-15/16in,	240.56
	N	900	1304647	18.85	EA	CYLINDER, SIDE BOX, 1-3/4 X18-7/16in,	332.13
	N	900	1304648	0.85	EA	RELAY-SOLENOID,12V, CONTINUOUS	25.80
	N	900	1304700	15.69	EA	CYLINDER, ANGLE, 1-1/2 X	120.83
	N	900	1304701	12.66	EA	CYLINDER, LIFT, 1-1/8 X 10in,REPLACES	175.52
	N	900	1304704	13.35	EA	CYLINDER, LIFT, 1-1/2 X 10in,REPLACES	128.77
	N	900	1304710	2.78	EA	PLOW KICKSTAND ZINC YELLOW	25.73
	N	900	1304711	7.29	EA	SHOE ASSY,OUTER SHOE,REPLACES	32.65
	N	900	1304712	8.88	EA	SHOE ASSY,CTR SHOE REPLACES	33.65
	N	900	1304713	8.31	EA	PLOW SHOE ASSY,TRIPEDGE	38.93
	N	900	1304715	6.00	EA	TRIP SPRING,REPLACES BOSS	22.75
	N	900	1304716	7.40	EA	TRIP SPRING,REPLACES BOSS	30.24
	N	900	1304718	15.95	EA	MOTOR,SINGLE POST,4-1/2in	171.30
	N	900	1304719	0.96	EA	SOLENOID,12V,MOTOR	28.41
	N	900	1304721	0.50	EA	HOSE, HYDRAULIC 1/4 x 15.5in	11.57
	N	900	1304722	0.43	EA	HOSE, HYDRAULIC 1/4 x 12in REPLACES	12.53
	N	900	1304723	1.10	EA	HOSE, HYDRAULIC 3/8 x 48in REPLACES	24.10
	N	900	1304724	0.50	EA	HOSE, HYDRAULIC 1/4 x 15in REPLACES	17.35
	N	900	1304725	0.90	EA	HOSE, HYDRAULIC 3/8 x 42in REPLACES	23.13
	N	900	1304726	0.85	EA	HOSE, HYDRAULIC 3/8 x 40in REPLACES	24.10
	N	900	1304727	0.95	EA	HOSE, HYDRAULIC 3/8 x 44in REPLACES	19.28
	N	900	1304728	0.75	EA	HOSE, HYDRAULIC 3/8 x 34in REPLACES	22.17
	N	900	1304729	0.47	EA	HOSE, HYDRAULIC 1/4 x 18in REPLACES	17.30
	N	900	1304730	0.75	EA	HOSE, HYDRAULIC, ANGLE, 1/4in x 30in	17.84
	N	900	1304737	0.20	EA	ELBOW,SWVL,90 DEG,3/8in MOR X 1/4in	5.81
	N	900	1304738	0.40	EA	ELBOW,SWVL,90 DEG,3/8in MP X 3/8in	4.96
	N	900	1304739	0.04	EA	BREATHER,1/4in MP,REPLACES BOSS	3.50
	N	900	1304740	2.75	EA	CABLE, POWER/GROUND, 90in,	50.42
	N	900	1304741	1.20	EA	CABLE, POWER/GROUND, 36in, PLOW	27.96
	N	900	1304744	1.00	EA	HARNESS, PLOW REPAIR, 13-PIN,	43.92
	N	900	1304745	1.00	EA	HARNESS, PLOW REPAIR,13-	43.92
	Y	901	1304749	35.00	EA	CUTTING EDGE, 84in x 6.0in x .250	86.40
	Y	901	1304750	57.00	EA	CUTTING EDGE 90inx 6.0in x .375	109.78
	Y	901	1304751	76.00	EA	CUTTING EDGE 90inx 6.0in x .500	133.06
	Y	901	1304752	81.00	EA	CUTTING EDGE 96inx 6.0in x .500	141.92
	Y	901	1304753	86.00	EA	CUTTING EDGE 102inx 6.0in x .500	150.78
	Y	901	1304754	91.00	EA	CUTTING EDGE 108inx 6.0in x .500	156.92
	Y	901	1304755	101.00	EA	CUTTING EDGE 120inx 6.0in x.500	177.40
	Y	901	1304757	108.00	EA	CUTTING EDGE 96inx 8.0in x .500in	354.96
	Y	901	1304758	115.00	EA	CUTTING EDGE 102inx 8.0in x .500in	379.44
	Y	901	1304759	122.00	EA	CUTTING EDGE 108inx 8.0in x .500in	399.96
	Y	901	1304760	36.00	EA	CUTTING EDGE,HALF,43.88inx 6.0in x	78.46
	Y	901	1304761	39.00	EA	CUTTING EDGE,HALF,47.88inx 6.0in x	85.60
	Y	901	1304762	43.00	EA	CUTTING EDGE,HALF,53.88inx 6.0in x	88.86
	Y	901	1304763	60.00	EA	CUTTING EDGE,HALF,59.13inx 6.0in x	116.84

Catalog Price List for Pricing in

*** Marking NEW Pricing on Items

For ALL Items in Catalogs

	Y	901	1304766	10.00	EA	CUTTING EDGE, URETHANE, WING,	122.79
	N	900	1304770	61.20	EA	PUSH FRAME, V-PLOW, REPLACES	311.76
	N	900	1304776	0.86	EA	KIT, EYE BOLT, 5/8 X 4-1/2, REPLACES	7.01
	N	900	1304777	0.78	EA	KIT, EYE BOLT, 1/2 X 5-1/2in, REPLACES	4.83
	N	900	1304779	42.97	EA	DEFLECTOR KIT,UNIVERSAL,REPLACES	224.60
	N	900	1304780	0.51	EA	KIT, PIN, KICKSTAND SPRING,	10.98
	N	900	1304781	2.53	EA	KIT, PIN, COUPLER SPRING, REPLACES	25.62
	N	900	1304782	4.01	EA	KIT, PIN, COUPLER SPRING, BOSS 10in	26.95
	N	900	1304783	3.97	EA	KIT, PIN, THREADED PIN 10 FT	39.55
	N	900	1304784	0.93	EA	KIT, PIN, PIVOT, REPLACES BOSS	13.40
	N	900	1304785	2.82	EA	KIT, PIN,THREADED PIN, REPLACES	24.95
	N	900	1304786	0.38	EA	KIT, PIN, CLEVIS, LIFT	3.25
	N	900	1304797		EA	BULB,H9 HIGH BEAM,REPLACES BOSS	14.54
	Y	901	1304800	57.00	EA	CUTTING EDGE 90inx 6.0in x .375	162.10
	Y	901	1304801	61.00	EA	CUTTING EDGE 96inx 6.0in x .375	172.60
	Y	901	1304802	86.00	EA	CUTTING EDGE 102inx 6.0in x .500	182.98
	Y	901	1304803	91.00	EA	CUTTING EDGE 108inx 6.0in x .500	193.78
	Y	901	1304804	76.00	EA	CUTTING EDGE 90inx 6.0in x .500	214.55
	Y	901	1304805	81.00	EA	CUTTING EDGE 96inx 6.0in x .500.	228.55
	N	900	1304812	15.48	EA	MOTOR, 12V, SPLINE SHAFT,CW	221.18
	N	900	1304814	0.62	EA	EYE BOLT W/NUTS, REPLACES CURTIS	6.50
	N	900	1304815	6.00	EA	TRIP SPRING, REPLACES CURTIS	19.20
	N	900	1304818	1.00	PR	BLADE GUIDE KIT, 24inORANGE,FLAT	13.02
	N	900	1304819	0.68	EA	SOLENOID, 12V, REPLACES CURTIS	24.00
	N	900	1304830	0.50	EA	HOSE, JACK, 26-1/2in, REPLACES	21.82
	N	900	1304831	0.70	EA	HOSE,LIFT, 37-1/2in, REPLACES CURTIS	26.42
	N	900	1304832	0.45	EA	HOSE,ANGLE,PS,19in,REPLACES	18.27
	N	900	1304833	0.50	EA	HOSE,ANGLE,DS,28in, REPLACES	23.22
	N	900	1304847	0.75	EA	TORSION SPRING,DS (LH) REPLACES	17.52
	N	900	1304848	0.75	EA	TORSION SPRING,PS (RH) REPLACES	17.52
	N	900	1305100	0.01	EA	SEAL KIT 1-1/2in RAM,REPLACES	24.14
	N	900	1305105	0.08	EA	SEAL KIT 2in RAM,REPLACES MEYER	19.50
	N	900	1305110	0.60	EA	PACKING NUT 1-1/2in REPLACES	34.49
	N	900	1305115	0.81	EA	PACKING NUT 2in,REPLACES MEYER	64.89
	N	900	1305200	0.06	EA	PACKING SET 1-1/2in RAM,REPLACES	9.30
	N	900	1305205	0.08	EA	PACKING SET 2in RAM,REPLACES	14.50
	N	900	1305210	0.56	EA	PACKING NUT 1-1/2in RAM	25.10
	N	900	1305211	0.56	EA	PACKING NUT 1-1/2in RAM,REPLACES	25.10
	N	900	1305215	0.81	EA	PACKING NUT 2in RAM,REPLACES	30.30
	N	900	1305300	0.01	EA	PACKING SET 1-1/2in RAM,REPLACES	10.70
	N	900	1305305	0.08	EA	SEAL KIT, 2in RAM,REPLACES FISHER	48.50
	N	900	1305310	0.50	EA	CYLINDER PACKING NUT,REPLACES	25.45
	N	900	1305315	0.81	EA	PACKING NUT 2in RAM,REPLACES	53.80
	N	902	1305316	0.01	EA	SEAL,CYLINDER, KIT,REPLACES	10.10
	N	900	1306005	6.44	EA	MOTOR,12 VOLT,FITS ELECT-TOUCH	117.00
	N	900	1306007	14.80	EA	MOTOR,4-1/2in;2 POST	179.50
	N	902	1306015	0.44	EA	A SOLENOID COIL&VALVE 3/8in STEM	100.00
	N	902	1306016	0.21	EA	A COIL,3/8in BORE REPLACES MEYER	30.00
	N	902	1306020	0.23	EA	A VALVE,3/8in STEM REPLACES MEYER	75.00
	N	902	1306025	0.48	EA	A COIL ,5/8in BORE, WORKS ON 1/2in	30.50

Catalog Price List for Pricing in

*** Marking NEW Pricing on Items

For ALL Items in Catalogs

	N	902	1306030	0.23	EA	A VALVE 1/2in STEM,REPLACES MEYER/	76.40
	N	902	1306031	0.30	EA	A & B VALVE,45/64in REPLACES MEYER	76.88
	N	902	1306035	0.51	EA	A SOLENOID,COIL&VALVE,1/2inSTEM	102.30
	N	902	1306040	0.93	EA	B SOLENOID COIL&VALVE,5/8inSTEM	159.00
	N	902	1306045	0.55	EA	B COIL,3-WAY,5/8in BORE REPLACES	38.00
	N	902	1306050	0.41	EA	B VALVE,5/8in STEM,REPLACES MEYER/	114.00
	N	902	1306051	0.41	EA	C & D VALVE,45/64in,REPLACES	100.65
	N	902	1306055	0.93	EA	C SOLENOID COIL&VALVE 5/8in REPLACE	173.00
	N	902	1306060	0.55	EA	C COIL,4 WAY,5/8in BORE,REPLACES	38.00
	N	902	1306065	0.43	EA	C VALVE,5/8in STEM,REPLACES MEYER/	102.10
	N	902	1306066	0.39	EA	E VALVE,45/64in STEM,REPLACES	125.80
	N	902	1306067	0.41	EA	C VALVE,45/64in STEM,REPLAES	123.55
	N	900	1306070	0.68	EA	MOTOR SOLENOID,REPLACES MEYER	11.32
	N	900	1306075	0.07	EA	ANGLE SWITCH E-47 (INDV PKG)	21.00
	N	900	1306080	0.05	EA	LIFT SWITCH E-47(INDV PKG)	21.00
	N	900	1306083	0.67	EA	SWITCH,MEMBRANE,REPLACES	280.00
	N	900	1306090	0.09	BG	*DISCONTINUED* HANDLE,BLACK(10	
	N	900	1306095	0.05	EA	BATTERY CONNECTOR,REPLACES	4.10
	N	900	1306100	0.04	EA	PRESSURE RELIEF VALVE W/BUSH	6.65
	N	900	1306105	0.45	EA	CROSSOVER VALVE KIT,REPLACES	79.99
	N	900	1306107	0.25	EA	CROSSOVER RELIEF CARTRIDGE,	139.26
	N	900	1306110	0.40	EA	CABLE,POWER 36in (RED),REPLACES	10.90
	N	900	1306115	0.29	EA	CABLE AND PLUG ASSY,REPLACES	22.00
	N	902	1306116	0.43	EA	COIL 45/64in BORE,REPLACES MEYER	59.80
	N	900	1306117	0.29	EA	CABLE AND PLUG ,W/DUAL	35.00
	N	900	1306120	0.59	EA	CABLE,POWER 63in (RED)	25.65
	N	900	1306125	0.48	EA	CABLE,GROUND 51in(BLACK)	22.80
	N	902	1306130	0.07	EA	SEAL, A, KIT	8.10
	N	902	1306135	0.11	EA	SEAL, C , KIT	16.60
	N	902	1306140	0.08	EA	SEAL, B , KIT	11.80
	N	902	1306145	0.01	EA	CROSSOVER SEAL KIT	12.35
	N	902	1306150	0.06	EA	SEAL KIT,REPLACES MEYER PART	35.10
	N	902	1306152	2.35	EA	PUMP,E47, REPLACES MEYER 15026	246.00
	N	902	1306153	0.01	EA	STRAINER FOR E47	6.20
	N	902	1306155	0.10	EA	SEAL,MASTER KIT,REPLACES MEYER	59.80
	N	900	1306165	0.01	EA	GASKET,REPLACES MEYER #551G	0.82
	N	900	1306170	0.24	EA	DRIVE END CAP & BUSHING,REPLACES	12.90
	N	902	1306173	2.71	EA	RAM 1-1/8 X 6 STROKE,REPLACES	56.00
	N	902	1306174	3.24	EA	RAM 1-1/8 X 8 STROKE, REPLACES	51.00
	N	902	1306175	0.02	EA	CUP PACKING,REPLACES MEYER	5.93
	N	902	1306176	0.02	EA	CUP, PACKING,REPLACES MEYER	13.00
	N	902	1306180	0.01	EA	1-1/8in O. RING,REPLACES MEYER	5.10
	N	902	1306182	0.01	EA	O-RING, 1 1/2in ID,REPLACES MEYER	4.00
	N	902	1306183	0.01	EA	O-RING 1 15/16in ID,REPLACES MEYER	2.75
	N	902	1306184	0.02	EA	O-RING 3 1/2inID,REPLACES MEYERS	5.95
	N	902	1306185	0.04	EA	PUMP SHAFT SEAL,REPLACES MEYER	6.70
	N	902	1306186	0.68	EA	CYLINDER COVER & SEAL REPLACES	33.10
	N	902	1306190	0.00	EA	SEAL, 5/16in NYLON COLLAR	1.16
	N	902	1306195	0.04	EA	O-RING, 4 3/4inID,REPLACES MEYER	1.40
	N	902	1306200	0.02	EA	SEAL, SHAFT,REPLACES MEYER #15686	6.00

Catalog Price List for Pricing in

*** Marking NEW Pricing on Items

For ALL Items in Catalogs

	N	902	1306202	2.50	EA	PUMP,E60, REPLACES MEYER 15729	280.00
	N	900	1306205	0.04	EA	WIPER,REPLACES MEYER PART #05119	9.99
	N	900	1306210	0.02	EA	SLEEVE,REPLACES MEYER PART	7.40
	N	900	1306212	0.02	EA	SLEEVE, E60H,REPLACES MEYER PART	7.40
	N	902	1306220	0.12	EA	SEAL KIT, BASIC,REPLACES MEYER	18.47
	N	902	1306225	0.13	EA	SEAL KIT, MASTER,REPLACES MEYER	74.00
	N	900	1306300	0.68	EA	SOLENOID,GROUND TO ACTIVATE	11.55
	N	900	1306310	0.45	EA	RELAY-CABLE HYD SYSTEM,REPLACES	16.50
	N	600	1306317	0.85	EA	SOLENOID,12V,MOTOR	27.00
	N	900	1306320	18.80	EA	MOTOR 4-1/2in OLD STYLE,REPLACES	127.90
	N	900	1306325	17.00	EA	MOTOR 4-1/2in STYLE 4 WESTERN	127.90
	N	900	1306326	19.48	EA	MOTOR 4-1/2in STYLE,REPLACES	122.20
	N	900	1306330	0.78	EA	GROUND CABLE 60in (BLACK)	17.00
	N	900	1306335	0.81	EA	BATTERY CABLE 60in (RED)	17.00
	N	900	1306340	0.31	EA	CABLE,BATTERY 22in (RED)	15.75
	N	900	1306345	0.25	EA	CARTRIDGE 20 W/NUT	45.00
	N	900	1306350	0.25	EA	CARTRIDGE 30 W/NUT	70.50
	N	902	1306351	0.27	EA	CARTRIDGE 31, REPLACES	72.30
	N	900	1306355	0.26	EA	CARTRIDGE 40 W/NUT,REPLACES	70.00
	N	902	1306356	0.29	EA	CARTRIDGE43,REPLACES	77.20
	N	900	1306360	0.25	EA	COIL W/SPADE TERMINALS	17.27
	N	900	1306365	0.20	EA	O-RING ONLY FOR BASE	0.95
	N	900	1306370	0.61	EA	BASE LUG, 3/4 HOLE(W)KIT REPLACES	12.70
	N	900	1306375	0.01	EA	GASKET FOR MOTOR REPLACES	1.54
	N	900	1306400	0.45	EA	SOLENOID,REPLACES FISHER #5794	14.90
	N	600	1306401	0.85	EA	SOLENOID,12V,MOTOR	25.80
	N	900	1306405	0.06	EA	JOYSTICK CABLE, REPLACES FISHER	21.70
	N	900	1306410	0.64	EA	JOYSTICK CABLE, ADJ,REPLACES	27.00
	N	900	1306415	16.50	EA	MOTOR, 4-1/2in CW, REPLACES FISHER	127.98
	N	902	1306427	0.34	EA	FILTER KIT INLINE (SNOW PLOW)	25.20
	N	900	1306430	0.08	EA	CAP & DIPSTICK, REPLACES FISHER	8.00
	N	900	1306435	0.03	EA	SEAL, MOTOR TO PUMP,REPLACES	7.40
	N	902	1306436	0.01	EA	SEAL,SHAFT FOR FISHER PUMP	7.20
	N	900	1306440	0.93	EA	*DISCONTINUED*	
	N	900	1306445	0.45	EA	BATTERY CABLE 60in (RED), REPLACES	17.00
	N	900	1306450	0.79	EA	GROUND CABLE 60in,BK,REPLACES	17.00
	N	900	1306455	0.30	EA	BATTERY CABLE 22in (RED), REPLACES	15.75
	N	900	1306460	0.26	EA	BOLT ASSEMBLY (F),REPLACES FISHER	6.00
	N	900	1306465	0.08	EA	ADAPTER,1/4inNPT TO 9/16inO-RING	2.50
	N	627	1306466	0.12	EA	ELBOW, 90, 9/16in O RINGTO	7.20
	N	627	1306467	0.18	EA	ELBOW, 90, 9/16in O RING TO 1/4in NPTF	17.75
	N	627	1306468	0.16	EA	ELBOW, 90,9/16in O RING TO 1/4in	8.80
	N	627	1306469	0.14	EA	ELBOW,45,9/16in O RING TO 1/4	10.50
	N	900	1306470	0.02	EA	O-RING ONLY FOR BASE LUG (F)	0.80
	N	627	1306471	0.12	EA	ELBOW, 45 ,9/16in O RING TO	9.15
	N	900	1306475	0.56	EA	BASE LUG, 1inHOLE(F)KIT REPLACES	11.60
	N	902	1306478	3.08	EA	HYDRAULIC PUMP KIT REPLACES	184.75
	N	902	1306485	0.01	EA	GASKET FOR WESTERN PUMP	2.20
	N	902	1306490	0.02	EA	STRAINER (SUCTION FILTER)	6.40
	N	902	1306492	0.10	EA	O-RING, REPLACES WESTERN 56416	0.38

Catalog Price List for Pricing in

*** Marking NEW Pricing on Items

For ALL Items in Catalogs

	N	900	1306505	0.83	EA	SOLENOID,STEEL,GROUND-ACTIVATE	17.42
	N	900	1306510	0.91	EA	SOLENOID,STEEL,POSITIVE-ACTIVATE	15.25
	N	900	1306600	0.76	EA	SOLENOID,GROUNDED, REVERSING	61.50
	N	900	1306901	1.21	EA	CONTROLLER, SAM MEYER/DIAMOND	215.92
	N	900	1306902	1.21	EA	CONTROLLER, SAM WESTERN/FISHER,	215.92
	N	900	1306903	1.14	EA	CONTROLLER, SAM BOSS	215.92
	N	900	1307005	1.88	QT	HYDRAULIC FLUID, 1 QUART/ BOTTLE	9.50
	N	900	1307010	23.54	EA	HYDRAULIC FLUID,1 CASE(12 QTS)	111.50
	N	900	1307014	31.50	EA	HYDRAULIC FLUID, 1 CASE (4	95.55
	N	900	1307015	45.00	EA	HYDRAULIC FLUID, 5 GAL.W/SPOUT	169.30
	N	900	1307020	420.00	EA	HYDRAULIC FLUID,55 GALLON DRUM	1,420.35
	N	900	1308005	1.18	PR	BLADE GUIDE KIT,26in YELLOW,ANG	22.35
	N	900	1308006	1.19	PR	BLADE GUIDE KIT 27inYELLOW,FLAT	19.65
	N	900	1308010	0.75	BG	REPLACEMENT TIPS (100 PCS/BAG)	29.61
	N	900	1308102	0.39	PR	MARKERS,NYLON,FLUORESCENT	23.75
	N	900	1308103	0.72	PR	MARKER,NYLON,ORANGE 24in STUD	35.00
	N	900	1308105	0.80	PR	MARKERS,NYLON,FLUORESCENT	37.70
	N	900	1308106	0.68	PR	MARKER,NYLON,ORANGE,28in,STUD	41.31
	N	900	1308107	0.68	PR	MARKER,NYLON,HEAVY	40.60
	N	900	1308110	1.00	PR	MARKERS,NYLON,FLUORESCENT	39.48
	N	900	1308111	0.98	PR	MARKER,NYLON,ORANGE,36in,STUD	46.17
	N	900	1308115	1.06	PR	MARKERS,NYLON,FLUORESCENT	54.15
	N	900	1308125	0.36	PR	ADAPTOR KIT, HORIZONTAL,REPLACES	9.25
	N	900	1308150	1.50	PR	MARKER KIT,HIGHWAY,1 PAIR,24in,	34.45
	N	900	1308160	1.85	PR	MARKER KIT,HIGHWAY,1	42.25
	N	900	1308200	1.28	PR	BLADE GUIDE KIT 27in RED,FLAT BASE	16.00
	N	900	1308205	1.18	PR	MARKER,NYLON,FLUOR	31.75
	N	900	1308210	1.28	PR	BLADE GUIDE ASSEMBLY W/FLAGS	28.20
	N	900	1308215	0.04	EA	FLAG FOR BLADE GUIDE W/inSinHOOK	6.00
	N	900	1308300	0.62	PR	BLADE GUIDE KIT,BLACK,22in 7/16-20	14.00
	N	900	1308600	0.25	EA	MARKER,DR,5/16X48in,ORN W/REFL	2.99
	N	900	1308605	0.25	EA	**DISCONTINUED REPLACED BY	2.99
	N	903-2	1308890	3.60	EA	SPINNER, POLY, DISC, 12-3/4in, STRAIGHT,	67.18
	N	903-2	1308900	7.00	EA	SPINNER,POLY,DISC,18in,CCW,YELLOW	103.90
	N	903-2	1308901	7.00	EA	SPINNER,POLY,DISC,18in,CW,YELLOW	103.90
	N	903-2	1308902	7.00	EA	SPINNER,POLY,DISC,18in,STRAIGHT,YELLOW	103.90
	N	903-2	1308903	8.00	EA	SPINNER,POLY,DISC,20in,CCW,YELLOW	129.98
	N	903-2	1308904	8.00	EA	SPINNER,POLY,DISC,20in,CW,YELLOW	129.98
	N	903-2	1308905	8.00	EA	SPINNER,POLY,DISC,20in,STRAIGHT,YELLOW	129.98
	N	903-2	1308906	14.00	EA	SPINNER,POLY,DISC,24in,CCW,YELLOW	158.40
	N	903-2	1308907	14.00	EA	SPINNER,POLY,DISC,24in,CW,YELLOW	158.40
	N	903-2	1308908	14.00	EA	SPINNER,POLY,DISC,24in,STRAIGHT,YELLOW	158.40

Catalog Price List for Pricing in

*** Marking NEW Pricing on Items

For ALL Items in Catalogs

	N	900	1309005	29.22	EA	DEFLECTOR ST-78/90, REPLACES	91.78
	N	900	1309010	10.14	EA	RUBBER,REPLACEMENT,5/16inX9inX96	50.81
	N	900	1309015	25.00	EA	DEFLECTOR C-7.5/M/C-8/C-8.5/M-9/M-10	96.10
	N	900	1309020	18.00	EA	RUBBER,REPLACEMENT 5/16X9X120in	67.53
	N	900	1309025	39.40	EA	DEFLECTOR,RUBBER	128.75
	N	900	1309030	31.70	EA	RUBBER,REPLACEMENT 1/2X12X120	94.65
	N	900	1309035	8.00	EA	DEFLECTOR,THERMOPLASTIC,CONTOU	139.80
	N	900	1309046	6.62	EA	SNOW DEFLECTOR,46in, RUBBER,V-	78.10
	N	900	1309052	7.48	EA	SNOW DEFLECTOR,52in, RUBBER,V-	91.10
	N	900	1309080	9.00	EA	SNOW DEFLECTOR,80in, RUBBER	105.70
	N	900	1309090	10.13	EA	SNOW DEFLECTOR,90in, RUBBER	115.50
	N	900	1309096	13.89	EA	SNOW DEFLECTOR,96in, RUBBER	127.95
	N	900	1309102	14.75	EA	SNOW DEFLECTOR,102in, RUBBER	135.90
	N	900	1309108	15.62	EA	SNOW DEFLECTOR,108in, RUBBER	142.55
	N	900	1309120	26.35	EA	SNOW DEFLECTOR,120in, RUBBER	158.40
	N	900	1309132	28.88	EA	SNOW DEFLECTOR,132in, RUBBER	174.25
	N	900	1309144	31.42	EA	SNOW DEFLECTOR,144in, RUBBER	190.10
	Y	904	1310020	9.00	EA	PLOW SHIELD,YELLOW,28inx96in,HDW	74.35
	Y	904	1310220	9.00	EA	PLOW SHIELD,RED,28inx96in,W/HDW	74.35
	N	900	1310410	10.23	EA	ROL-A-BLADE,CASTER,SET(3),ORNG	99.99
	N	900	13104101	1.20	EA	CASTER REPLACEMENT KIT,FOR	25.28
	N	900	1311005	7.00	EA	HEADLAMP KIT W/HARNESS	290.04
	N	900	1311006	0.09	EA	HEADLAMP SWITCH,REPLACES MEYER	12.00
	N	900	1311100	10.45	EA	LIGHT KIT, SAM UNIVERSAL	214.98
	N	900	13111008	0.30	EA	HARDWARE KIT, LIGHT (FOR MTG. ONE	8.85
	N	900	1311110	1.09	EA	ADAPTER,HEADLIGHT,INTERNATIONAL	104.00
	N	900	1311115	5.74	EA	HEADLAMP SUPPORT KIT,REPLACES	38.80
	Y	901	1311200	41.00	EA	CUTTING EDGE,HALF,49.94inx 6.0in x	98.20
	Y	901	1311201	46.00	EA	CUTTING EDGE,HALF,55.94inx 6.0in x	112.96
	Y	901	1311202	38.00	EA	CUTTING EDGE,HALF,34.81inx 6.0in x	90.76
	Y	901	1311203	34.00	EA	CUTTING EDGE,HALF,40.81inx 6.0in x	106.32
	Y	901	1311204	48.00	EA	CUTTING EDGE,HALF,46.81inx 6.0in x	121.88
	Y	901	1311206	9.60	EA	CUTTING EDGE, PS CENTER	53.34
	Y	901	1311207	9.60	EA	CUTTING EDGE, DS CENTER	53.34
	Y	901	1311208	19.20	EA	CUTTING EDGE, DS AND PS CENTERS	124.32
	Y	901	1311211	33.75	EA	BACK DRAG EDGE, STRAIGHT 7-1/2FT	89.74
	Y	901	1311212	36.65	EA	BACK DRAG EDGE, STRAIGHT 8FT	94.52
	Y	901	1311213	39.00	EA	BACK DRAG EDGE, STRAIGHT 8-1/2FT	99.29
	Y	901	1311214	41.35	EA	BACK DRAG EDGE, STRAIGHT 9FT	104.06
	Y	901	1311215	26.00	PR	BACK DRAG EDGE, V-PLOW 7-1/2FT	181.40
	Y	901	1311216	30.40	PR	BACK DRAG EDGE, V-PLOW 8-1/2FT	220.54
	Y	901	1311217	33.70	PR	BACK DRAG EDGE, V-PLOW 9-1/2FT	240.59
	Y	901	1311218	44.00	EA	BACK DRAG EDGE,KIT,WIDE OUT	138.43
	Y	901	1312005	24.50	EA	TWO METER 1inX6inX78inRUBBER	179.58
	Y	901	1312010	39.50	EA	ST-78 1-1/2inX8inX78inRUBBER	353.33
	Y	901	1312015	43.00	EA	ST-84 1-1/2inX8inX84inRUBBER	380.10
	Y	901	1312020	48.00	EA	ST-90 1-	406.88
	Y	901	1312025	40.50	EA	C-8 1-1/2inX8inX96in,RUBBER C.E.	433.65
	Y	901	1312030	59.70	EA	C-8.5 1-1/2inX8inX102inRUBBER	461.18
	Y	901	1312035	78.00	EA	HM-9 1-1/2inX10inX108inRUBBER	630.99

Catalog Price List for Pricing in

*** Marking NEW Pricing on Items

For ALL Items in Catalogs

	Y	901	1312040	87.00	EA	HM-10 1-1/2inX10inX120inRUBBER	700.35
	N	900	1312105	25.40	EA	RUBBER C.E.6-	179.58
	N	900	1312110	43.00	EA	RUBBER,C.E. 7ft STD,1-1/2x8x84,W	380.10
	N	900	1312115	44.00	EA	RUBBER,C.E.7-1/2ft STD1-	406.88
	N	900	1312120	48.00	EA	RUBBER,C.E.8ft STD,1-	433.65
	N	900	1312125	59.70	EA	RUBBER CE8-1/2ft STD,1-	461.18
	N	900	1312130	78.00	EA	RUBBER CE9ft STD,1-	630.99
	N	900	1312135	87.00	EA	RUBBER CE10ft STD,1-	700.35
	N	900	1312202	2.40	EA	EDGE,RUBBER CUTTING,CTR,LABELED	39.58
	N	900	1312220	65.00	EA	RUBBER CUTTINGEDGE	519.83
	N	900	1312225	69.30	EA	RUBBER CUTTINGEDGE	554.13
	N	900	1312226	69.30	EA	RUBBER CE 8ft STD,1-1/2X10X96,	557.88
	N	900	1312230	78.00	EA	RUBBER	630.99
	Y	901	1312505	48.00	EA	CUTTING EDGE 96in x 8.0in x 1.50in	724.50
	Y	901	1312510	54.00	EA	CUTTING EDGE 108inx 8.0in x1.50in	815.85
	Y	901	1312515	59.00	EA	CUTTING EDGE 120inx 8.0in x1.50in	907.20
	Y	901	1312534	16.30	EA	CUTTING EDGE 80inx 6.0in x 1.0in	251.60
	Y	901	1312536	18.40	EA	CUTTING EDGE 90inx 6.0in x 1.0in	281.80
	Y	901	1312537	19.60	EA	CUTTING EDGE 96inx 6.0in x 1.0in	293.20
	Y	901	1312546	78.00	EA	RUBBER CUTTING EDGE,1.5in X 10in X	752.58
	Y	901	1312547	87.00	EA	RUBBER CUTTING EDGE,1.5in X 10in X	836.20
	Y	901	1312548	96.00	EA	RUBBER CUTTING EDGE,1.5in X 10in X	919.82
	Y	901	1312549	105.00	EA	RUBBER CUTTING EDGE,1.5in X 10in X	1,003.44
	N	900	1313005	0.91	EA	CONTROL CABLE (OLD STYLE),9 FT L	28.00
	N	900	1313010	0.89	EA	CABLE,CONTROL,NEW STYLE,108in	30.00
	N	900	1313015	0.64	EA	CABLE ASSY 9ft BLACK ADJUSTABLE	33.00
	N	900	1313100	0.48	EA	40in SLC CABLE,REPLACES FISHER	38.60
	N	900	1313105	0.86	EA	90inSLC CABLE,REPLACES FISHER	41.50
	N	900	1313110	0.43	EA	30in SLC CABLE,REPLACES FISHER	40.70
	N	900	1314000	3.22	EA	CONTROL ASSY,INCLUDES SHIFTER&	190.00
	N	900	1314001	1.97	EA	CONTROL ASSY., SHIFTER ONLY	149.10
	N	900	1314002	0.26	EA	KNOB & LEVER ASSY.FOR CONTROL	19.50
	N	900	1314003	0.02	EA	LOCKSPOOL FOR CONTROL ASSY.,	3.80
	N	900	1314005	0.01	EA	CONTACT STRIP FOR CONTROL ASSY	6.20
	N	900	1314007	0.19	EA	BOTTOM COVER FOR CONTROL	34.84
	N	900	1315205	12.07	EA	LEG,PLOW JACK PAINTED &	55.80
	N	900	1315310	0.38	EA	HARNESS,PLOW REPAIR, REPLACES	60.50
	N	900	1315315	0.50	EA	HARNESS,VEHICLE REPAIR, REPLACES	59.65
	N	900	1316105	62.30	EA	A-FRAME,PLOW,7-1/2ft,MEYER #13612	394.50
	N	900	1316110	49.60	EA	SECTOR,PLOW,7-1/2ft, MEYER #12326	369.00
	N	900	1316115	70.80	EA	A-FRAME,PLOW,8 ft , MEYER #13608	595.46
	N	900	1316120	97.40	EA	SECTOR,PLOW,8 ft , MEYER #12793	645.00
	N	900	1316205	62.00	EA	A-FRAME,STANDARD PLOW,WESTERN	453.05
	N	900	1316210	41.40	EA	QUADRANT,STANDARD	598.00
	N	900	1316215	68.80	EA	A-FRAME,PRO PLOW,REPLACES	460.20
	N	900	1316220	57.30	EA	QUADRANT,PRO PLOW,REPLACES	660.00
	N	900	1316305	59.00	EA	A-FRAME,SNOWPLOW KIT,REPLACES	310.00
	Y	901	1317000	127.00	EA	CUTTING EDGE 120inx 6.0in x .625 STD	215.33
	Y	901	1317001	140.00	EA	CUTTING EDGE 132inx 6.0in x .625 STD	237.95
	Y	901	1317002	168.00	EA	CUTTING EDGE 120inx 8.0in x .625 STD	330.08

Catalog Price List for Pricing in

*** Marking NEW Pricing on Items

For ALL Items in Catalogs

	Y	901	1317003	187.00	EA	CUTTING EDGE 132inx 8.0in x .625 STD	332.80
	Y	901	1317004	153.00	EA	CUTTING EDGE 108inx 8.0in x .625 STD	257.35
	Y	901	1317005	136.00	EA	CUTTING EDGE 96inx 8.0in x .625	231.13
	Y	901	1317006	114.60	EA	CUTTING EDGE 108inx 6.0in x .625 STD	189.66
	Y	901	1317007	51.00	EA	CUTTING EDGE 48inx 6.0in x .625 STD	86.51
	Y	901	1317008	184.00	EA	CUTTING EDGE 108inx 8.0in x .750 STD	319.46
	Y	901	1317009	204.00	EA	CUTTING EDGE 120inx 8.0in x .750 STD	312.68
	Y	901	1317010	225.00	EA	CUTTING EDGE 132inx 8.0in x .750 STD	377.44
	Y	901	1317011	245.00	EA	CUTTING EDGE 144inx 8.0in x .750 STD	411.74
	Y	901	1317012	168.00	EA	CUTTING EDGE 120inx 8.0in x .625 STD	331.30
	Y	901	1317013	31.00	EA	CUTTING EDGE 24inX6.0inX .75HWY	57.68
	Y	901	1317014	82.00	EA	CUTTING EDGE 48inX8.0inX.750 STD	130.15
	Y	901	1317015	102.00	EA	CUTTING EDGE 60inX8.0inX.750 STD	192.27
	Y	901	1317016	123.00	EA	CUTTING EDGE 72inX8.0inX.75 STD	230.72
	Y	901	1317017	26.00	EA	CUTTING EDGE 24inX6.0inX.625 STD	48.08
	Y	901	1317019	38.00	EA	CUTTING EDGE 36in X 6.0in X .625 STD	71.69
	Y	901	1317020		EA	CUTTING EDGE108in X 6.0in X .625 STD	216.32
	Y	901	1317021	168.00	EA	CUTTING EDGE 108inx 8.0in x .625 STD	272.88
	Y	901	1317023	187.00	EA	CUTTING EDGE 132inx 8.0in x .625 STD	333.50
	Y	901	1317024	194.00	EA	CUTTING EDGE 144inx 8.0in x .625 STD	363.83
	Y	901	1317025	136.00	EA	CUTTING EDGE,96inX 8.0inX .625,STD	236.90
	Y	901	1317038	45.10	EA	CUTTING EDGE, 36inx 6.0in x .750,STD	77.20
	Y	901	1317039	60.30	EA	CUTTING EDGE, 48inx 6.0in x .750,STD	102.95
	Y	901	1317040	46.00	EA	CUTTING EDGE 36inx 6.0in x .750	373.80
	Y	901	1317041	62.00	EA	CUTTING EDGE 48inx 6.0in x .750	509.60
	Y	901	1317046	112.00	EA	CUTTING EDGE 132inx 6.0in x .500 STD	195.14
	Y	901	1317047	122.00	EA	CUTTING EDGE 144inx 6.0in x .500 STD	212.88
	N	900	1317100	44.70	EA	SHOE,PLOW,CAST UNIVERSAL,3/4IN SQ	123.20
	N	900	1317103	1.25	EA	HARDWARE,MOUNT,PLOW SHOE	9.95
	N	900	1317105	24.40	EA	TRIP SPRING, COMPRESSION	171.35
	N	900	1317106	16.50	EA	TRIP SPRING,REPLACES GLEDHILL	78.20
	N	900	1317107	22.40	EA	SPRING,TORSION,TRIP EDGE 3/4IN	181.65
	N	900	1317110	16.40	EA	SHOE HOUSING,PLOW, 2.5in REPLACES	172.50
	N	900	1317111	14.40	EA	SHOE HOUSING,PLOW 3in REPLACES	176.70
	N	900	1317119	8.00	EA	BLOCK, CHAIN LIFT, PLOW, REPLACES	99.75
	N	900	1317120	12.10	EA	SHOE POST, PLOW 2in REPLACES	150.90
	N	900	1317121	12.90	EA	SHOE POST,PLOW 2.5in REPL BONNEL	161.10
	N	900	1317125	2.55	EA	SCREW W/NUT ADJ 1in REPLACES	76.82
	N	900	1317126	4.90	EA	SCREW,JACK,PLOW 1.25in REPLACES	85.10
	N	900	1317129	2.33	EA	HANDLE,CRANK,JACK,PLOW	44.98
	N	900	1317130	73.50	EA	RUNNING GEAR,PLOW ASSY,2-1/2IN W/	558.48
	N	900	1317131	79.40	EA	RUNNING GEAR,PLOW ASSY,3IN W/	580.96
	N	900	1317132	98.29	EA	CASTER,10in, MUNI PLOW	1,038.00
	N	900	1317140	45.00	EA	SHOE, PLOW, MOLDBOARD, CAST,	161.35
	N	900	1317141	71.50	EA	SHOE, PLOW, MOLDBOARD, CAST,	243.90
	N	900	1317150	8.20	EA	GUARD,CURB,MUNI PLOW,TRIP	55.90
	N	900	1317180	1.43	EA	PIN ASSEMBLY, 1in X 5in, REPLACES	23.21
	N	900	1317181	2.58	EA	PIN ASSEMBLY, 1in X 9-1/2in, REPLACES	33.30
	N	900	1317182	1.74	EA	PIN ASSEMBLY, 1-1/4in X 4in, REPLACES	26.50
	N	900	1317183	2.15	EA	PIN ASSEMBLY, 1-1/4in X 5in, REPLACES	33.12

Catalog Price List for Pricing in

*** Marking NEW Pricing on Items

For ALL Items in Catalogs

	N	900	1317184	3.27	EA	PIN ASSEMBLY, 1-1/4in X 7-1/in,	41.23
	N	900	1317185	4.12	EA	PIN ASSEMBLY, 1-1/4in X 11in,	46.07
	N	900	1317186	3.28	EA	PIN ATTACHING, HITCH HANDLE,	41.43
	N	900	1317187	4.39	EA	PIN, PIVOT, ACP SAFETY TRIP,	81.25
	N	900	1317200	58.00	EA	LOOP, DROP PIN HITCH, PLOW SIDE	394.90
	N	900	1317210	110.00	EA	RECEIVER, DROP PIN HITCH, TRUCK	679.00
	N	900	1317212	245.01	EA	HITCH ASSEMBLY, HUSTING STYLE,	1,450.50
	N	900	1317214	212.50	EA	HITCH ASSEMBLY, HUSTING STYLE,	1,096.82
	N	900	1317216	278.01	EA	HITCH ASSEMBLY, HUSTING STYLE,	1,602.06
	N	900	1317218	218.01	EA	HITCH ASSEMBLY, HUSTINGS STYLE,	1,277.76
	N	900	1317220	404.00	EA	HITCH ASSEMBLY, BLANK BOTTOM,	1,598.00
	N	900	1317222	49.00	EA	ROLLER KIT, HUSTING HITCH	394.00
	N	900	1317230	512.00	EA	HITCH ASSEMBLY,DROP PIN, MUNI	1,990.00
	N	900	1317235	524.01	EA	HITCH ASSEMBLY, DROP PIN,TILT,	2,540.00
	N	900	1317240	262.00	EA	MOUNT KIT, MUNI HITCH, BUMPER TO	650.00
	Y	932	1317245	473.13	EA	HITCH ASSEMBLY,QUICK HITCH,W/3in	
	Y	932	1317246	163.64	EA	SWIVEL ADAPTOR,QUICK HITCH,30-	
	N	900	1317250	433.60	EA	HITCH ASSEMBLY, PIN EAR, W/ 3in CYL	1,670.00
	N	900	1317255	457.01	EA	HITCH ASSEMBLY, PIN EAR,TILT, W/3in	2,150.00
	N	900	1317260	122.50	EA	SWIVEL ADAPTOR, 21in PIN EAR, W/	575.00
	N	900	1317262	114.50	EA	SWIVEL ADAPTOR, 30-1/2in PIN EAR, W/	575.00
	N	900	1317263	172.01	EA	SWIVEL ADAPTOR,PENNDOT STYLE	540.00
	N	900	1317270	624.88	EA	HITCH ASSEMBLY, DROP PIN,BUMPER-	2,856.00
	N	900	1317275	549.19	EA	HITCH ASSEMBLY, PIN EAR,BUMPER-	2,480.00
	N	900	1317280	464.01	EA	HITCH ASSY,PENNDOT STYLE,W/3in	2,140.00
	N	900	1317288	7.26	EA	SPRING,CHAIN,MUNI PLOW	92.90
	N	900	1320908	11.79	EA	SNOW DEFLECTOR,.35in x 9in x 96in,	45.25
	N	900	1320910	14.73	EA	SNOW DEFLECTOR,.35in x 9in x 120in,	56.55
	N	900	1321210	19.65	EA	SNOW DEFLECTOR,.35in x 12in x 120in,	85.70
	N	900	1321211	21.61	EA	SNOW DEFLECTOR,.35in x 12in x 132in,	94.30
	N	900	1321212	23.57	EA	SNOW DEFLECTOR,.35in x 12in x 144in,	102.80
	N	900	1335005	533.60	EA	STARTER KIT,PLAN-O-GRAM SNOW	5,490.00
	N	900	1335007	523.00	EA	STARTER KIT,PLAN-O-GRAM SNOW	3,562.40
	Y	903	1400050	969.00	EA	SPREADER 8 FT 2 CU YD GAS 20:1	3,720.00
	Y	903	1400050SS	843.00	EA	SPREADER 8 FT 2 CU YD 304SST GAS	4,450.00
	Y	903	1400100	975.00	EA	SPREADER 8 FT 2 CU YD GAS 20:1	3,795.00
	Y	903	1400100SS	873.00	EA	SPREADER 8 FT 2 CU YD 304SST GAS	4,600.00
	Y	903	1400200SS	753.00	EA	SPREADER 6 FT 1.5 CU YD 304SST GAS	4,450.00
	Y	903	1400250SS	764.00	EA	SPREADER 6 FT 1.5 CU YD 304SST GAS	4,605.00
	Y	903	1400300SS	910.00	EA	SPREADER 10 FT 2.5 CU YD 304SST	4,990.00
	Y	903	1400350SS	950.00	EA	SPREADER 10 FT 2.5 CU YD 304SST	5,145.00
	Y	903	1400400	837.00	EA	SPREADER KIT,96in POLY	4,180.00
	Y	903	1400450	853.00	EA	SPREADER KIT,96in POLY HOPPER, EXT	4,420.00
	Y	903	1400455SS	1,395.01	EA	SPREADER 8 FT 2.5 CU YD 304SST GAS	6,499.00
	Y	903	1400455SSE	1,335.01	EA	SPREADER 8 FT 2.5 CU YD 304SST	6,514.00
	Y	903	1400455SSH	1,335.01	EA	SPREADER 8 FT 2.5 CU YD 304SST HYD	6,208.00
	Y	903	1400460SS	1,460.01	EA	SPREADER 9 FT 2.75 CU YD 304SST	6,811.00
	Y	903	1400460SSE	1,400.01	EA	SPREADER 9 FT 2.75 CU YD 304SST	6,823.00
	Y	903	1400460SSH	1,400.01	EA	SPREADER 9 FT 2.75 CU YD 304SST	6,499.00
	Y	903	1400465SS	1,526.01	EA	SPREADER 10 FT 3 CU YD 304SST GAS	7,618.00

Catalog Price List for Pricing in

*** Marking NEW Pricing on Items

For ALL Items in Catalogs

	Y	903	1400465SSE	1,466.01	EA	SPREADER 10 FT 3 CU YD 304SST ELEC	7,631.00
	Y	903	1400465SSH	1,466.01	EA	SPREADER 10 FT 3 CU YD 304SST HYD	7,443.00
	Y	903	1400475SS	1,470.00	EA	SPREADER 8 FT 3.5 CU YD 304SST GAS	7,696.00
	Y	903	1400475SSE	1,500.00	EA	SPREADER 8 FT 3.5 CU YD 304SST	7,738.00
	Y	903	1400475SSH	1,405.00	EA	SPREADER 8 FT 3.5 CU YD 304SST HYD	7,520.00
	Y	903	1400500SS	1,500.00	EA	SPREADER 9 FT 4 CU YD 304SST GAS	8,012.00
	Y	903	1400500SSE	1,500.00	EA	SPREADER 9 FT 4.0 CU YD 304SST	8,054.00
	Y	903	1400500SSH	1,435.00	EA	SPREADER 9 FT 4 CU YD 304SST HYD	7,622.00
	Y	903	1400505SS	2,375.00	EA	SPREADER 9 FT 5 CU YD 304SST GAS	7,650.00
	Y	903	1400505SSE	1,975.00	EA	SPREADER 9 FT 5 CU YD 304SST ELEC	7,850.00
	Y	903	1400505SSH	1,975.00	EA	SPREADER 9 FT 5 CU YD 304SST HYD	7,300.00
	Y	903	1400550SS	1,560.00	EA	SPREADER 10 FT 4.5 CU YD 304SST	8,168.00
	Y	903	1400550SSE	1,560.00	EA	SPREADER 10 FT 4.5 CU YD 304SST	8,210.00
	Y	903	1400550SSH	1,500.00	EA	SPREADER 10 FT 4.5 CU YD 304SST	7,778.00
	Y	903	1400560SS	1,620.00	EA	SPREADER 10 FT 5 CU YD 304SST GAS	7,650.00
	Y	903	1400560SSE	1,675.00	EA	SPREADER 10 FT 5 CU YD 304SST ELEC	7,850.00
	Y	903	1400560SSH	1,560.00	EA	SPREADER 10 FT 5 CU YD 304SST HYD	7,300.00
	Y	903	1400601SS	995.00	EA	SPREADER 8 FT 2 CU YD 304SST ELEC	4,689.00
	Y	903	1400701SS	681.50	EA	SPREADER 6 FT 1.5 CU YD 304SST	4,689.00
	N	903-5	1401100P	51.00	EA	CHAIN, PINTLE WELDMENT, 122 LINKS	399.52
	N	903-5	1401100RL	0.17	EA	LINK, PINTLE CHAIN REPAIR INCLUDES	7.70
	N	903-5	1401101RL	0.17	EA	LINK,667H PINTLE CHAIN REPAIR INCLUDES	5.96
	N	903-5	1401102RL	0.17	EA	LINK,667X PINTLE CHAIN REPAIR INCLUDES	5.96
	N	903-5	1401150	9.80	EA	CLUTCH ASSY,ELECTRIC 12 VDC HARDWARE	193.95
	N	903-2	1401200	19.50	EA	GEARBOX,W/1/4in STRAIGHT KEYWAY	466.06
	N	903-5	1401300	40.00	EA	CHAIN,CONVEYOR, ASSY,93 LINKS,SCH072,BLK	335.50
	N	903-5	1401500	64.00	EA	CHAIN,CONVEYOR, ASSY,151 LINKS,SCH120,	499.70
	N	903-5	1405100	2.50	EA	SHAFT,IDLER,SCH,S/N (CS) 1125+	36.00
	N	903-5	1405150	2.11	EA	SPROCKET,IDLER SHAFT,S/N (CS)	28.10
	Y	903	1406657SSH	2,600.00	EA	SPREADER 9 FT 6 CU YD 304SST HYD	10,269.00
	Y	903	1406757SSH	2,760.00	EA	SPREADER 10 FT 7 CU YD 304SST HYD	10,659.00
	Y	903	1406863SSH	2,910.00	EA	SPREADER 10 FT 8.3 CU YD 304SST	11,063.00
	Y	903	1406969SSH	3,000.00	EA	SPREADER 10 FT 9.6 CU YD 304SST	11,473.00
	N	903-5	1410200	1.25	EA	BEARING,DRIVE SHAFT,1-1/8inSELF ALIGN	25.20
	N	903-5	1410241	0.25	EA	WIPER BELT,HOPPER	9.00
	N	903-5	1410250	1.97	EA	SPROCKET,DRIVE,CONVEYOR CHAIN(6)TOOTH	31.08
	N	903-5	1410302	4.95	EA	SHAFT,DRIVE,S/N(CS)1125+BELOW/	49.14
	N	903-5	141030SSK	0.26	EA	DRIVE SHAFT KIT,SST,S/N 1376 & BELOW	76.40

Catalog Price List for Pricing in

***** Marking NEW Pricing on Items**

For ALL Items in Catalogs

	N	903-5	141036SSK	0.26	EA	DRIVE SHAFT KIT ,S/N 1126 AND ABOVE	71.10
	N	903-5	1410405	0.83	EA	IDLER WELDMENT,S/N (CS)1125+	36.00
	N	903-5	141040K	0.02	EA	IDLER SHAFT REBUILD KIT CS,S/N 1125+BEL0	147.25
	N	903-5	141040SSK	0.02	EA	IDLER SHAFT,REBUILD KT SST,S/N1376+BELOW	138.60
	N	903-5	141050K	13.70	EA	SPINNER/SHAFT(REBUILD)KIT-STANDARD	146.10
	N	903-5	141050W	0.49	EA	TAKE UP BOLT WELDMENT,PLATED	7.80
	N	903-5	141050WSS	0.50	EA	BOLT,TAKE UP 304SS	9.85
	N	903-5	141055K	10.79	EA	SHAFT KIT,SCH SPINNER,STD LG	123.60
	N	903-5	141060K	15.10	EA	SPINNER/SHAFT (REBUILD)KIT EXT	144.90
	N	903-5	141065K	12.43	EA	SPINNER/SHAFT KIT,SCH EXT LG	126.25
	N	903-5	1410701	4.50	EA	CONTROLLER FOR SCH & 1400 SERIES, GAS	222.35
	N	903-5	1410702	0.63	EA	SPROCKET,#40 CHAIN,16T W/2 SET SCREWS,ZY	11.52
	N	903-5	1410704	3.84	EA	EXHAUST SYSTEM REPAIR KIT FOR 8 & 8.5 HP	79.30
	N	903-5	1410706	1.72	EA	COUPLER,FLEX CHAIN,DRIVE SHAFT GEARBOX	23.90
	N	903-5	1410708	1.77	EA	SERVICE ONLY,HARNESS,SPRDR W/RING,	76.80
	N	903-5	1410710	0.26	EA	BRACKET,THROTTLE MOTOR FOR	7.00
	N	903-5	1410711	1.40	EA	CHAIN ROLLER #40,SPINNER,80LNK	13.50
	N	903-5	1410712	5.23	EA	SHAFT,DRIVE,S/NCS1126+ABOVE,SST1 377+ABOV	38.75
	N	903-5	1410713	0.50	EA	MOTOR,ELECTRIC THROTTLE W/BRKT BRIGGS	142.32
	N	903-5	1410714	0.30	EA	BRACKET,THROTTLE CONTROL TECUMSEH	7.00
	N	903-5	1410715	0.60	EA	THROTTLE CONTROL W/BRACKET,TECUMSEH	156.05
	N	903-5	1410716	0.91	EA	HARNESS,WIRE, FOR VEHICLE SIDE	49.30
	N	903-5	1410717	14.10	EA	BATTERY,12 VOLT, 20 AH, 275 CCA GEL CELL	98.80
	N	903-5	1410718	0.60	EA	HARNESS,WIRE, EXTENSION SCH	141.00
	N	900	1410719	4.90	EA	MOTOR,START,REPLACES BRIGGS &	104.94
	N	903-5	1410720	20.00	EA	GEARBOX ASSEMBLY	442.30
	N	295	1410803	0.07	EA	PIN,CLEVIS,SHK DIA .375,OAL 2.000	1.30
	N	903-5	1411000	0.86	EA	BEARING,SELF ALIGNING FLANGED 1in	17.76
	N	903-5	1411001	1.84	EA	TAKE UP UNIT 1in	24.00

Catalog Price List for Pricing in

*** Marking NEW Pricing on Items

For ALL Items in Catalogs

	N	903-5	1411800	4.50	EA	SPROCKET,CLUTCH, 52 TEETH,	34.40
	N	903-2	1411907	0.29	EA	MOTOR,THROTTLE CONTROL W/TERMINALS	135.32
	N	903-5	1411910	0.02	EA	THROTTLE PIN ASSEMBLY	12.00
	N	903-5	1411915	0.27	EA	SPROCKET,ENGINE,#40 CHAIN,12T ZN YEL	9.20
	N	903-5	1412000	0.03	EA	KEY, 1/4in X 1/4in X 1.5in for 141070K	1.20
	N	903-5	1412300	1.35	EA	CHAIN,#40 ROLLER, ENGINE	9.96
	N	903-5	1420004	2.36	EA	SPROCKET,#40 CHAIN,24T,W/(2)	23.20
	N	903-5	1420014	0.04	EA	PIN,CLEVIS,SHK DIA .250,OAL 2.509	0.80
	N	903-5	1420016	0.01	EA	HAIR SPRING COTTER PIN,	0.20
	N	903-5	142005A	45.00	EA	CHUTE,SPINNER STANDARD	523.20
	N	903-5	142005ASS	41.00	EA	CHUTE,SPINNER STANDARD SST	742.50
	N	903-5	1420100	1.80	EA	BEARING,3/4in W/GREASE FIT IN BOTTOM	27.30
	Y	390	1420101	1.49	EA	BEARING,PIL BLK,3/4,TAP BASE	22.00
	N	903-5	1420150	2.83	EA	SHAFT,SPINNER, STD LENGTH,ZINC & CLEAR	17.80
	N	903-5	1420204	4.30	EA	SPINNER,12.0 in POLY,SERVICE PART	62.50
	Y	903	1421057SSH	3,590.00	EA	SPREADER 12 FT 10 CU YD 304SST HYD	12,243.00
	Y	903	1421157SSH		EA	SPREADER 13 FT 11 CU YD 304SST HYD	14,729.00
	Y	903	1421163SSH	3,615.00	EA	SPREADER 12 FT 11 CU YD 304SST HYD	12,827.00
	Y	903	1421257SSH	3,503.00	EA	SPREADER 14 FT 12 CU YD 304SST HYD	13,979.00
	Y	903	1421263SSH		EA	SPREADER 13 FT 12 CU YD 304SST HYD	15,794.00
	Y	903	1421357SSH		EA	SPREADER 15 FT 13 CU YD 304SST HYD	
	Y	903	1421363SSH	4,099.00	EA	SPREADER 14 FT 13 CU YD 304SST HYD	14,623.00
	Y	903	1421368SSH		EA	SPREADER 13 FT 13 CU YD 304SST HYD	16,499.00
	Y	903	1421369SSH	3,464.00	EA	SPREADER 12 FT 13 CU YD 304SST HYD	13,171.00
	Y	903	1421463SSH		EA	SPREADER 15 FT 14 CU YD 304SST HYD	18,199.00
	Y	903	1421469SSH	4,283.00	EA	SPREADER 14 FT 14 CU YD 304SST HYD	15,139.00
	Y	903	1421569SSH		EA	SPREADER 15 FT 15 CU YD 304SST HYD	20,000.00
	Y	903	1425657SSH	2,600.00	EA	SPREADER 9 FT 6 CU YD 304SST HYD	10,269.00
	Y	903	1425757SSH	2,760.00	EA	SPREADER 10 FT 7 CU YD 304SST HYD	10,659.00
	Y	903	1425863SSH	2,910.00	EA	SPREADER 10 FT 8.3 CU YD 304SST	11,063.00
	Y	903	1425969SSH	3,000.00	EA	SPREADER 10 FT 9.6 CU YD 304SST	11,473.00
	N	903-5	142X150	4.00	EA	SHAFT,SPINNER SCH, EXTENDED,ZINC & CLEAR	24.80
	N	903-5	1430004	1.32	EA	CHAIN #40 ROLLER,SPINNER,76LNK	12.00
	N	903-2	1430015	0.05	EA	WIRE,POWER,RED,16 GA,46inLG	3.80
	N	903-2	14300291	0.00	EA	FUSE, 3AG-10 AMP, FUSE	1.60

Catalog Price List for Pricing in

*** Marking NEW Pricing on Items

For ALL Items in Catalogs

	N	903-2	1450110	53.15	EA	CHAIN,CONVEYOR,8FT,REPLACES AIRFLOW	354.68
***	N	903-2	1450111	70.00	EA	CHAIN,CONVEYOR,8ft,REPLACES AIRFLOW	394.32
	N	903-2	1450120	87.50	EA	CHAIN,CONVEYOR,10ft REPLACES AIRFLOW	444.08
***	N	903-2	1450150	266.00	EA	CHAIN,CONVEYOR,10ft,REPLACES AIRFLOW	1,234.78
***	N	903-2	1450155	319.00	EA	CHAIN,CONVEYOR,12FT,REPLACES AIRFLOW	1,330.94
***	N	903-2	1450160	372.00	EA	CHAIN,CONVEYOR,14ft,REPLACES AIRFLOW	1,543.12
	N	903-2	1450190	60.00	EA	CHAIN,CONVEYOR, 8ft,REPLACES CURTIS	372.12
	Y	903	1450657SSH	2,600.00	EA	SPREADER 9 FT 6 CU YD 304SST HYD	10,269.00
	Y	903	1450757SSH	2,760.00	EA	SPREADER 10 FT 7 CU YD 304SST HYD	10,659.00
	Y	903	1450863SSH	2,910.00	EA	SPREADER 10 FT 8.3 CU YD 304SST	11,063.00
	Y	903	1450969SSH	3,000.00	EA	SPREADER 10 FT 9.6 CU YD 304SST	11,473.00
	Y	903	1451057SSH	3,084.00	EA	SPREADER 12 FT 10 CU YD 304SST HYD	12,243.00
***	N	903-2	1451110	51.34	EA	CHAIN,CONVEYOR,8ft,REPLACES FISHER	357.28
***	N	903-2	1451111	70.00	EA	CHAIN,CONVEYOR,8ft,REPLACES FISHER	353.30
	N	903-2	1451113	88.00	EA	CHAIN,CONVEYOR,10ft,REPLACES FISHER	493.92
	Y	903	1451157SSH	3,375.00	EA	SPREADER 13 FT 11 CU YD 304SST HYD	14,729.00
	Y	903	1451163SSH	3,274.00	EA	SPREADER 12 FT 11 CU YD 304SST HYD	12,827.00
	Y	903	1451257SSH	3,503.00	EA	SPREADER 14 FT 12 CU YD 304SST HYD	13,979.00
	Y	903	1451263SSH	3,500.00	EA	SPREADER 13 FT 12 CU YD 304SST HYD	15,794.00
	Y	903	1451357SSH		EA	SPREADER 15 FT 13 CU YD 304SST HYD	16,995.00
	Y	903	1451363SSH	4,099.00	EA	SPREADER 14 FT 13 CU YD 304SST HYD	14,623.00
	Y	903	1451368SSH	3,500.00	EA	SPREADER 13 FT 13 CU YD 304SST HYD	16,499.00
	Y	903	1451369SSH	3,464.00	EA	SPREADER 12 FT 13 CU YD 304SST HYD	13,171.00
	Y	903	1451463SSH		EA	SPREADER 15 FT 14 CU YD 304SST HYD	18,199.00
	Y	903	1451469SSH	4,283.00	EA	SPREADER 14 FT 14 CU YD 304SST HYD	15,139.00
	Y	903	1451569SSH		EA	SPREADER 15 FT 15 CU YD 304SST HYD	18,999.00
	N	903-2	1452110	74.80	EA	CHAIN,CONVEYOR,8ft,REPLACES FLINK LMC-6A	415.64
	N	903-2	1452150	270.60	EA	CHAIN,CONVEYOR,10ft, REPLACES FLINK	1,080.48
***	N	903-2	1453108	70.00	EA	CHAIN,CONVEYOR, 8ft,REPLACES DOWN	391.84
***	N	903-2	1453110	60.00	EA	CHAIN,CONVEYOR 8ft,REPLACES HINIKER	359.52
***	N	903-2	1453112	88.00	EA	CHAIN,CONVEYOR,10ft,RPLC DOWN EASTER,MID	519.20
***	N	903-2	1453115	66.00	EA	CHAIN,CONVEYOR,8ft,RPLC TARCO HIGHLANDER	415.40
	N	903-2	1453120	256.00	EA	CHAIN,CONVEYOR,10ft, REPLACES TARCO	1,121.60
	N	903-2	1453160	260.00	EA	CHAIN,CONVEYOR,10ft,REPLACES GOOD ROADS	1,167.84
***	N	903-2	1453168	296.00	EA	CHAIN,CONVEYOR,14ft, REPLACES GOODROADS	1,514.38

Catalog Price List for Pricing in

*** Marking NEW Pricing on Items

For ALL Items in Catalogs

	N	903-2	1454110	58.00	EA	CHAIN,CONVEYOR,8ft,REPLACES HENDERSON	347.84
	N	903-2	1454112	73.00	EA	CHAIN,CONVEYOR,10ft,REPLACES HENDERSON	452.44
***	N	903-2	1454123	78.00	EA	CHAIN,CONVEYOR, 8ft,REPLACES HENDERSON	405.60
***	N	903-2	1454124	88.00	EA	CHAIN,CONVEYOR, 9ft,REPLACES HENDERSON	451.40
***	N	903-2	1454125	97.00	EA	CHAIN,CONVEYOR,10ft,REPLACES HENDERSON	490.64
	N	903-2	1454150	193.60	EA	CHAIN,CONVEYOR,10ft,REPLACES HENDERSON	895.72
	N	903-2	1454155	232.00	EA	CHAIN,CONVEYOR,12ft,REPLACES HENDERSON	1,399.92
	N	903-2	1454160	371.00	EA	CHAIN,CONVEYOR,14ft,REPLACES,HEN DERSON	1,575.28
***	N	903-2	1455110	51.34	EA	CHAIN,CONVEYOR,8ft,REPLACES HI WAY P	342.43
	N	903-2	1455113	78.00	EA	CHAIN,CONVEYOR,8ft,REPLACES HI WAY	374.76
***	N	903-2	1455115	98.00	EA	CHAIN,CONVEYOR,10ft,REPLACES HI WAY	530.54
	N	903-2	1455150	253.00	EA	CHAIN,CONVEYOR,10ft,REPLACES HI WAY	1,038.16
	N	903-2	1455155	303.00	EA	CHAIN,CONVEYOR,12ft REPLACES HI WAY	1,279.20
	N	903-2	1455160	354.00	EA	CHAIN,CONVEYOR,14ft,REPLACES HI WAY	1,483.08
	N	903-2	1455200	71.00	EA	CHAIN,CONVEYOR,8FT,REPLACES MONROE MSPV	369.68
	N	903-2	1455210	91.00	EA	CHAIN,CONVEYOR,10ft,REPLACES MONROE MSPV	484.23
***	N	903-2	1456110	63.00	EA	CHAIN,CONVEYOR,8ft,REPLACES SNO-WAY	428.55
***	N	903-2	1457110	57.00	EA	CHAIN,CONVEYOR,8ft,REPLACES SWENSON	395.78
	N	903-2	1457112	83.00	EA	CHAIN,CONVEYOR,8ft,REPLACES SWENSON MDV	436.24
	N	903-2	1457115	92.00	EA	CHAIN,CONVEYOR,9ft,REPLACES SWENSON MDV	483.68
	N	903-2	1457120	89.00	EA	CHAIN,CONVEYOR,10ft,REPLACES SWENSON MDV	591.44
	N	903-2	1457150	209.00	EA	CHAIN,CONVEYOR,10ft REPLACES SWENSON	917.44
***	N	903-2	1457155	260.00	EA	CHAIN,CONVEYOR,10ft,REPLACES SWENSON	1,210.50
	N	903-2	1457157	230.00	EA	CHAIN,CONVEYOR,11ft,REPLACES SWENSON	1,217.00
	N	903-2	1457160	312.00	EA	CHAIN,CONVEYOR,12ft,REPLACES SWENSON	1,296.00
***	N	903-2	1457165	364.00	EA	CHAIN,CONVEYOR,14ft,REPLACES SWENSON	1,489.61
	N	903-2	1458110	55.00	EA	CHAIN,CONVEYOR,8ft,REPLACES SMITH II,	362.56
	N	903-2	1458210	60.00	EA	CHAIN,CONVEYOR,8ft, REPLACES TORWELL	372.12

Catalog Price List for Pricing in

*** Marking NEW Pricing on Items

For ALL Items in Catalogs

	N	903-2	1458213	179.00	EA	CHAIN,CONVEYOR,10ft REPLACES TORWELL	1,047.96
	N	903-2	1458215	250.00	EA	CHAIN,CONVEYOR,10ft,REPLACES TORWELL	1,143.40
***	N	903-2	1459100	74.00	EA	CHAIN,CONVEYOR,8ft,REPLACES WARREN	395.80
***	N	903-2	1459110	51.34	EA	CHAIN,CONVEYOR,8ft,REPLACES WESTERN RC	342.43
***	N	903-2	1459111	59.00	EA	CHAIN,CONVEYOR,8ft,REPLACES WESTERN HC	353.31
***	N	903-2	1459112	253.00	EA	CHAIN,CONVEYOR,10ft,REPLACES WARREN	1,160.79
	N	903-2	1459113	88.00	EA	CHAIN,CONVEYOR,10ft,REPLACES WESTERN HC	493.92
	Y	903	1461057SSH	3,084.00	EA	SPREADER 12 FT 10 CU YD 304SST HYD	12,243.00
	Y	903	1461157SSH		EA	SPREADER 13 FT 11 CU YD 304SST HYD	14,729.00
	Y	903	1461163SSH	3,274.00	EA	SPREADER 12 FT 11 CU YD 304SST HYD	12,827.00
	Y	903	1461257SSH	3,503.00	EA	SPREADER 14 FT 12 CU YD 304SST HYD	13,979.00
	Y	903	1461263SSH		EA	SPREADER 13 FT 12 CU YD 304SST HYD	15,794.00
	Y	903	1461357SSH		EA	SPREADER 15 FT 13 CU YD 304SST HYD	16,995.00
	Y	903	1461363SSH	4,099.00	EA	SPREADER 14 FT 13 CU YD 304SST HYD	14,623.00
	Y	903	1461368SSH		EA	SPREADER 13 FT 13 CU YD 304SST HYD	16,499.00
	Y	903	1461369SSH	3,464.00	EA	SPREADER 12 FT 13 CU YD 304SST HYD	13,171.00
	Y	903	1461463SSH		EA	SPREADER 15 FT 14 CU YD 304SST HYD	18,199.00
	Y	903	1461469SSH	4,283.00	EA	SPREADER 14 FT 14 CU YD 304SST HYD	15,139.00
	Y	903	1461569SSH		EA	SPREADER 15 FT 15 CU YD 304SST HYD	28,000.00
	Y	903	1471056SSH	2,655.00	EA	SPREADER 10 FT 7 CU YD 304SST HYD	11,160.00
	Y	903	1471156SSH	2,855.00	EA	SPREADER 11 FT 8 CU YD 304SST HYD	11,870.00
	Y	903	1471256SSH	3,055.00	EA	SPREADER AUGER 12 FT 9 CU YD	12,523.00
	Y	903	1471456SSH	3,561.10	EA	SPREADER 14 FT 10 CU YD 304SST HYD	13,221.00
	N	903-5	1491301	12.50	EA	TARP KIT, 120in X 47in SCH HOPPER	156.35
	N	903-5	1491500	11.25	EA	TARP KIT, 96in X 50.5in SCH HOPPER	132.60
	N	903-5	1491501	9.85	EA	TARP KIT, 96in X 47in SCH HOPPER	132.60
	N	903-5	1491700	8.00	EA	TARP KIT, 72in X 50.5in SCH HOPPER	124.56
	N	903-5	1491701	8.00	EA	TARP KIT, 72in X 47in SCH HOPPER	118.60
	N	562	1492100	1.35	EA	LIGHT,UTILITY	18.00
	N	562	1492106	0.47	EA	BRACKET, FLOOD/SPOT, SST, .50in	9.90
	N	562	1492107	0.90	EA	BRACKET, LIGHT, MOUNT, SST	24.90
	N	562	1492110	1.63	EA	LIGHT,FLOOD,12-24 VDC,54	45.80
	N	562	1492111	1.50	EA	LIGHT,SPREADR,12-	47.80
	N	562	1492112	1.80	EA	LIGHT,FLOOD,12-24 VDC,6 LED,CLEAR	63.90
	N	562	1492113	1.41	EA	LIGHT,FLOOD,12-24 VDC,6	63.98
	N	562	1492114	1.43	EA	LIGHT,FLOOD, 12-24 VDC,9	75.60
	N	562	1492115	1.55	EA	LIGHT,FLOOD,12-24 VDC, 6	57.70
	N	562	1492116	1.20	EA	LIGHT,SPREADR,12-24VDC,6	59.70
	N	562	1492117	1.20	EA	LIGHT,FLOOD,12-24 VDC,5	57.70
	N	562	1492118	1.75	EA	LIGHT,FLOOD,12-24 VDC,6 LED,CLEAR,	67.95
	N	562	1492119	1.76	EA	LIGHT,FLOOD,12-24 VDC,9	75.60

Catalog Price List for Pricing in

*** Marking NEW Pricing on Items

For ALL Items in Catalogs

	N	562	1492120	2.25	EA	LIGHT,FLOOD,12-24 VDC,12	136.90
	N	562	1492121	2.25	EA	LIGHT,SPOT,12-24 VDC, 12	136.90
	N	562	1492125	2.33	EA	LIGHT,FLOOD,12-24 VDC, 6	144.90
	N	562	1492126	2.41	EA	LIGHT,SPOT, 12-24 VDC, 6	144.90
	N	562	1492127	1.49	EA	LIGHT,FLOOD,12-24 VDC,14	89.98
	N	562	1492128	1.66	EA	LIGHT,FLOOD,12-24 VDC,16 LED,CLEAR,	94.90
	N	562	1492129	1.00	EA	LIGHT,FLOOD,12-24 VDC,4	44.65
	N	562	1492135	1.60	EA	LIGHT,FLOOD,12-24 VDC,6 LED,CLEAR,	59.70
	N	562	1492136	0.65	EA	LIGHT,FLOOD,12-24 VDC,4	59.80
	N	562	1492137	1.45	EA	LIGHT,FLOOD,12-24 VDC,6 LED,CLEAR,	63.90
	N	562	1492138	1.37	EA	LIGHT, FLOOD, 12-24VDC, 6 LED, CLEAR	67.90
	N	562	1492139	0.32	EA	LIGHT, FLOOD, 12-24VDC, 3 LED, CLEAR	44.65
	N	562	1492140	2.20	EA	LIGHTBAR,SPOT,12-	139.00
	N	562	1492141	2.64	EA	LIGHTBAR,SPOT,12-24VDC,18	179.10
	N	562	1492142	3.30	EA	LIGHTBAR,SPOT,12-24VDC,24	198.90
	N	903-1	1492144	56.00	EA	SPILL SHIELD,2ftx12ft, BELTED RUBBER,PKG	316.80
	N	562	1492150	3.95	EA	LIGHTBAR,SPOT-FLOOD COMBO,12-24	159.00
	N	562	1492151	5.90	EA	LIGHTBAR,SPOT-FLOOD COMBO,12-	224.34
	N	562	1492152	7.88	EA	LIGHTBAR,SPOT-FLOOD COMBO,12-	306.60
	N	562	1492153	9.75	EA	LIGHTBAR,SPOT-FLOOD COMBO,12-	392.70
	N	903-1	1492168	65.00	EA	SPILL SHIELD,2ftx14ft, BELTED RUBBER,PKG	369.55
	N	562	1492215	1.20	EA	LIGHT,SPOT, 12-24 VDC, 6 LED,CLEAR,	57.70
	N	562	1492218	1.75	EA	LIGHT,SPOT,12-24 VDC,6 LED,CLEAR,	67.95
	N	562	1492237	1.45	EA	LIGHT,SPOT,12-24 VDC,6 LED,CLEAR,	63.90
	N	562	1493118	1.75	EA	LIGHT,FLOOD,12-24 VDC,6 LED,CLEAR,	67.95
	N	562	1493215	1.20	EA	LIGHT,FLOOD,12-24 VDC, 6 LED,CLEAR,	57.70
	N	562	1493218	1.75	EA	LIGHT,SPOT,12-24 VDC,6 LED,CLEAR,	67.95
	N	903-5	1493501SS	91.70	EA	SIDE EXTENSION KIT,HOPPER SCH,47W12inSST	937.45
	N	903-5	1493505	153.00	EA	KIT,SIDE EXTENSIONS SCH,12in CARBON STL	592.00
	N	903-5	1493550SS	106.00	EA	KIT,SIDE EXTENSION,120in SST SCH	1,094.70
	N	903-5	1496500	10.00	EA	*DISCONTINUED*SPREADER HOLD DOWN KIT	
	N	903-1	1496505	8.64	EA	SPREADER HOLD DOWN KIT,(4 PCS),2inX10FT,	53.00
	Y	553-1	1497051	205.00	EA	CAB GUARD, SPREADER, UNIV 304 SST, 10GA	1,496.00
	N	903-5	1497505	63.00	EA	CHUTE,SPINNER EXTENDED	595.85
	N	903-5	1497505SS	57.00	EA	CHUTE,SPINNER EXTENDED SST	945.00
	N	903-5	1498550	105.00	EA	*DISCONTINUED*	
	N	903-5	1498551	78.50	EA	SCREEN,TOP FITS 47in WIDE SCH096 W/LINCH	390.00
	N	903-5	1498560	87.00	EA	SCREEN,TOP FITS 50in WIDE SCH072SS W/	356.25
	N	903-5	1498561	62.60	EA	SCREEN,TOP FITS 47in WIDE SCH072SS W/	355.98

Catalog Price List for Pricing in

*** Marking NEW Pricing on Items

For ALL Items in Catalogs

	N	903-5	1498571	102.70	EA	SCREEN,TOP W/LINCH PINS FOR SCH120	596.90
	N	903-5	1499300SS	18.00	EA	VEE,INVERTED OPTION KIT SST,SCH120	241.95
	N	903-5	1499500	16.77	EA	VEE,INVERTED OPTION KIT CS,SCH096	148.80
	N	903-5	1499500SS	15.00	EA	VEE,INVERTED KIT SST,SCH096	193.58
	N	903-5	1499700SS	12.00	EA	VEE,INVERTED,KIT,SCH072SS	185.95
	N	624	203D4PR42PR	32.00	EA	VALVE, 21 GPM, 3 WAY DET IN,4 WAY,	944.30
	N	624	204PRPB	17.73	EA	VALVE, 4 WAY,PR, W/POWER BEYOND	459.75
	N	889	211141	0.20	EA	REPLACEMENT FLASH TUBE-STROBE	24.00
	Y	390	2F12SCR	1.00	EA	FLANGE UNIT,2-HOLE,3/4in,SET SCREW	12.95
	Y	390	2F20SCR	2.50	EA	FLANGE UNIT,2-HOLE,1-1/4in,SET	17.20
	Y	390	2F24SCR	3.50	EA	FLANGE UNIT,2-HOLE,1-1/2in,SET	25.42
	N	903-5	3000210	0.16	EA	PIN, BRACE SST	5.80
	N	903-5	3000362	1.10	EA	MUFFLER,ROUND LO-TONE FOR	35.60
	N	903-5	3000746	13.78	EA	KIT, MOTOR REPLACEMENT (TGS05)	333.20
	N	903-5	3000837	0.43	EA	HARNESS,WIRE W/PLUG TGS05	16.70
	N	903-5	3001152	0.96	EA	HARNESS, WIRE COMPLETE FOR	24.80
	N	903-5	3001378	0.18	EA	CABLE,BATTERY BLACK 14in LENGTH	7.75
	N	537	3001379	0.18	EA	CABLE, BATTERY RED 14in LENGTH	7.75
	N	903-5	3001443	0.02	EA	LINK,MASTER,#40 ROLLER CHAIN	2.40
	N	903-5	3001471	24.72	EA	SPINNER ASSEMBLY, CS UTS	385.86
	N	903-5	3001472A	10.80	EA	SPINNER DISK ASSEMBLY,POLY,UTS	159.75
	N	903-5	3001540	1.02	EA	HARNESS,TGS TRUCK WIRE,ASSY,SERVICE ONLY	69.10
	N	903-5	3002225	0.11	EA	COLLAR,.75 DIA LOCK W/2 SET	2.00
	N	903-5	3002511	11.00	EA	LID,ASSEMBLY TGS05A/TGS05B	118.55
	N	903-5	3003032	1.45	EA	BEARING,5/8in BORE,4 HL TGS05A/B CTRS2.5	18.80
	N	903-5	3003035	8.33	EA	SHAFT ASSEMBLY,TGS05 SERIES AUGER	123.80
	N	903-5	3003079	7.00	EA	LID,ASSEMBLY,TGS01A/TGS01B	69.24
	N	903-5	3003579	17.00	EA	MOTOR SPINNER ASSY,SERV ONLY TGSUV1	304.96
	N	903-5	3003580	12.00	EA	LID,ASSEMBLY,TGSUV1	38.75
	N	903-2	3003831	3.18	EA	HARDWARE BAG ASSEMBLY,TGSUV1	28.95
	N	290	3004040	0.20	EA	CLAMP,1-1/8in,U-BOLT STYLE,ZINC	3.00
	N	903-5	3004245	0.03	EA	BUSHING,BRONZE OILITE,1/2inID X	2.80

Catalog Price List for Pricing in

*** Marking NEW Pricing on Items

For ALL Items in Catalogs

	N	903-5	3004919	0.02	EA	HOSE,EXHAUST, STAINLESS STEEL,SCH	10.00
	Y	532	3005345	45.00	EA	HITCH,3 POINT, RECEIVER ASSEMBLY	209.56
	N	903-5	3005348	3.00	EA	BAFFLE KIT,TGSUV1 SPREADER	12.00
	N	903-5	3005423	18.00	EA	CONVERSION KIT,TGSUV1 TO TGSUVPRO	576.00
	N	903-5	3005693	5.00	EA	MOTOR,12V DC, 3in DIA,1000 RPM	160.00
	N	903-5	3005705	1.04	EA	SPINNER,POLY,TGSUV1A & TGSUV1B	27.80
	N	903-5	3005706	1.05	EA	SPINNER,POLY TGS01,TGS05, & TGSUVPRO	27.80
	N	903-5	3006645	1.85	EA	ANGLE,SPINNER LUG SST SDD	28.96
	N	903-5	3006646	2.24	EA	ROD, HINGE SST	28.85
	N	903-5	3006659	4.76	EA	SHIELD,SPINNER WELDMENT,SST UTS	57.30
	N	903-5	3006679	21.00	EA	SERVICE ONLY,SPINNER ASSEMBLY,SST UTS	568.30
	N	903-5	3006702	82.00	EA	FRAME WLDMNT ASSEMBLY TGS05B	420.80
	N	903-5	3006707T	7.00	EA	BRACKET, MOTOR MOUNTING,TGS05B FNSH	28.85
	N	903-5	3006717A	63.00	EA	SPINNER & HARDWARE,96 SDD SST	878.90
	N	903-5	3006724	7.78	EA	WIRE HARNESS,MAIN,SHPE SERIES	248.50
	N	903-5	3006753	0.13	EA	WIRE HARNESS,CHUTE,SHPE1500/TG SPREADER	30.50
	N	903-5	3006833	10.20	EA	GEAR MOTOR,12 VDC SPINNER	365.00
	N	903-5	3006842	0.57	EA	CABLE,POWER,CONTROL BOX,SHPE SERIES	94.00
	N	903-5	3006844	0.26	EA	WIRE HARNESS,SPREADER SHPE1500	84.00
	N	903-5	3006887	68.00	EA	ENGINE, 10.5 HP, B & S W/ RECOIL BOXED	1,238.00
	N	903-5	3006964	6.60	EA	TARP,SHPE1500,BLACK,18 0Z COATED VINYL	132.00
	N	903-2	3007039	65.90	EA	SCREEN,WELDMENT,SHPE1500,PAINTE D BLK	342.20
	N	903-2	3007300	0.05	EA	SWITCH,ROCKER W/RED LED (CLUTCH)	27.75
	N	903-2	3007301	0.06	EA	SWITCH,ROCKER W/WHITE LED (ENGINE)	27.75
	N	903-2	3007302	0.06	EA	SWITCH,ROCKER W/O LED (THROTTLE)	27.75
	N	903-2	3007349	62.50	EA	SCREEN, TOP WLDMNT,FOR 48 WIDE SCH072	512.40
	N	903-5	3007412	32.00	EA	*DISCONTINUED REPLACED BY 3025070*	
	N	903-5	3007416	5.30	EA	VIBRATOR 200 LBS 12 VDC	193.95
	N	903-5	3007502	0.95	EA	GATE,FLOW ADJUSTER,TGSUV1B	20.20

Catalog Price List for Pricing in

*** Marking NEW Pricing on Items

For ALL Items in Catalogs

	N	903-5	3007527	36.00	EA	CHUTE,POLY EXTENDED,ASSEMBLY	795.60
	N	903-2	3007683	2.10	EA	AUGER WELDMENT, TGS05/TGS05A/TGS05B	40.80
	N	903-2	3007809	0.54	EA	HUB,SPINNER,TAILGATE SPRDR W/INSTALLED	5.10
	N	903-5	3007811	2.30	EA	AUGER WELDMENTW/SET SCREW,TGS01	43.65
	N	903-5	3007917	1.08	EA	FLOW GATE KIT TGSUV1B, TGSUV1A	18.40
	N	903-2	3008045	4.30	EA	SPINNER,11.5in POLY, 1in SHAFT,REPLACES	62.50
	N	903-2	3008046	8.00	EA	VIBRATOR KIT, V-BOX SPREADER 200 LBS	226.85
	N	903-2	3008076	5.30	EA	VIBRATOR 80 LBS 12 VDC	177.78
	N	903-5	3008112	0.01	EA	HOSE,UTS,DIRECT DRIVE	27.40
	N	903-5	3008113	0.01	EA	HOSE,UTS,GEAR, MOTOR	43.20
	N	903-1	3008241	8.00	EA	VIBRATOR KIT,80 LBS	214.57
	N	903-2	3008289	1.72	EA	COUPLING, DRIVE SHAFT/GEARBOX9ft & 10ft	34.30
	N	903-2	3008290	8.00	EA	BEARING,HD TAKE-UP,9ft & 10ft GAS/HYD	27.30
	N	903-2	3008294	8.00	EA	BEARING,FLANGED,9ft & 10ft GAS/HYD	26.55
	N	903-2	3008300	5.50	EA	SPROCKET, CHAIN,9ft & 10ft GAS/HYD	32.55
	N	903-2	3008352	40.00	EA	GRATE, WELDED TOP,9ft HYD/GAS	221.84
	N	903-2	3008359	47.00	EA	INVERTED V ASSEMBLY,9ft HYD/GAS	491.95
	N	903-2	3008388	87.00	EA	CHUTE ASSY, GAS SPINNER	1,310.00
	N	903-2	3008390	74.00	EA	SCREEN SHPE2000	342.20
	N	903-5	3008560	40.00	EA	LOCK KIT, DUMP TAILGATE,HOPPER SPREADER	159.00
	N	903-5	3008571	8.60	EA	SHAFT IDLER ASSEMBLY	75.82
	N	903-2	3008611	10.31	EA	DISC,SPINNER ASSEMBLY	138.52
	N	903-2	3008620	3.00	EA	WIRE HARNESS W/ VIBRATOR CONNECTION	99.90
	N	903-2	3008630	98.90	EA	CHUTE,SPINNER, HYDRAULIC SPREADER	1,529.00
	N	903-2	3008632	3.00	EA	HUB,SPINNER MACHINED,UNIVERSAL,4-3/4 DIA	39.00
	N	903-2	3008835	2.20	EA	SPROCKET,24 TOOTH	18.45
	N	903-5	3008838	8.80	EA	TARP SHPE2000	144.00
	N	903-2	3008860	92.00	EA	CHAIN,9ft CONVEYOR, 9ft HYD/GAS	542.50

Catalog Price List for Pricing in

*** Marking NEW Pricing on Items

For ALL Items in Catalogs

	N	903-2	3009067	1.80	EA	BEARING,SPINNER SHAFT	17.40
	N	903-2	3009114	102.00	EA	CHAIN,10ft CONVEYOR	549.80
	N	903-2	3009197	78.00	EA	PAN,CONVEYOR FLOOR, 10ft HYD/GAS	925.68
	N	903-2	3009201	52.50	EA	INVERTED V ASSY 120inSST WELDED,70inWIDE	521.00
	N	903-2	3009206	40.00	EA	GRATE, WELDED TOP,10ft HYD/GAS	239.38
	N	903-2	3009215	3.80	EA	COUPLING,SHAFT 1 X 1	94.40
	N	903-2	3009320	5.30	EA	MOTOR,12 VDC,100 RPM,1/8 HP	259.00
	N	903-2	3009327	1.45	EA	CHAIN,SPINNER DRIVE	7.95
	N	903-5	3009526	2.60	EA	PLATE,DETACH,MOUNT SST	65.10
	N	903-5	3009653	2.00	EA	WIRE HARNESS 3ft HOPPER SPREADER	27.10
	N	903-5	3009863	1.00	EA	ADAPTER, MOTOR TGS	19.80
	N	903-5	3009995	18.40	EA	GEAR MOTOR, AUGER SHPE	478.00
	N	903-2	3010034	5.00	EA	SHAFT,IDLER,1-1/2in X 28in L, ZINC CLEAR	56.48
	N	903-2	3010056	25.00	EA	DISC,SPINNER ASSEMBLY (HYD) SERVICE ONLY	149.10
	N	903-2	3010057	124.00	EA	GEAR BOX 50:1,W/2in X 27 1/8 LONG SHAFT	996.00
	N	903-2	3010116	87.00	EA	GRATE,WELDED HOPPER TOP FINISHED BLACK	396.70
	N	903-5	3010220	18.10	EA	MOTOR AND ADAPTER KIT for TSGUVPRO,TGS01	270.00
	N	903-2	3010310	7.15	EA	JACK, FEED GATE	90.76
	N	903-2	3010390	4.50	EA	CONTROLLER FOR SCH & 1400 SERIES, GAS	229.75
	N	903-2	3010443	13.70	EA	JACK ASSEMBLY, FEED GATE	154.50
	N	903-1	3010548	79.00	EA	KIT, TIE DOWN MUNICIPAL SPREADERS	313.85
	N	903-2	3010603	6.84	EA	BEARING, HD TAKE-UP 1.5 DIA	50.80
	N	903-2	3010653	279.00	EA	CHAIN,10ft CONVEYOR	1,210.50
	N	903-2	3010845	7.60	EA	SPROCKET,8 -TOOTH,2in FOR 667X CHAIN ZN-	52.90
	N	903-2	3010846	7.70	EA	SPROCKET IDLER ,8-TOOTH,1-1/2 FOR667X CH	55.80
	N	903-2	3010847	154.20	EA	GEARBOX 50:1,2inSHAFT W/8T 667X SPRKTS	1,462.15
	N	903-2	3010863	111.00	EA	GEAR BOX 25:1,W/2in X 27 1/8 LONG SHAFT	996.00
	N	903-2	3010970	1.15	EA	SPINNER,POLY TGS06	27.80

Catalog Price List for Pricing in

*** Marking NEW Pricing on Items

For ALL Items in Catalogs

	N	903-2	3010991		EA	GEAR BOX 25:1,2inSHAFT W/8T,667X SPRKTS	2,048.00
	N	903-5	3011137	2.74	EA	BRACKET,HANGER,UTS SST	57.70
	N	903-5	3011139	1.13	EA	PIN,HINGE,SST	29.80
	N	903-5	3011370	5.25	EA	TARP SHPE0750	96.00
	N	903-2	3011727	31.00	EA	SCREEN, FLAT SHPE0750	144.50
	N	903-5	3011864	1.50	EA	CONTROLLER,TGS.W/VIBRATOR SWITCH 09/10	322.90
	N	903-2	3012001	43.00	EA	AUGER SHPE4000	426.60
	N	903-2	3012057	31.00	EA	GEAR MOTOR AUGER SHPE4000	612.60
	N	903-2	3012081	14.00	EA	VIBRATOR 400 LBS 12 VDC	516.40
	N	903-2	3012393	3.04	EA	SPINNER 14in POLY CW	73.75
	N	903-2	3012415	2.73	EA	STAKE POCKET ANCHOR KIT	12.08
	N	903-2	3012431	5.30	EA	MOTOR RPLCMNT FOR MTR IN GEARMOTORS	191.00
	N	903-2	3012458	44.00	EA	WIRE MESH, TOP SCREEN	207.96
	N	903-2	3012519	146.20	EA	CHUTE ADJUSTABLE, LOW MOTOR	1,644.40
	N	903-1	3012959	14.60	EA	TARP SHPE4000	119.36
	N	903-2	3013427	4.04	EA	HANDLE WELDMENT, CHUTE	80.80
	N	903-1	3013659	18.00	EA	VIBRATOR KIT 400 LBS FORCE 12 VDC	595.55
	N	903-5	3013744	48.50	EA	LOCK KIT, DUMP TAILGATE SHPE4000	182.30
	N	903-5	3013821	48.30	EA	GEAR MOTOR 12 VDC .75 HP	1,184.00
	N	903-5	3013877	58.00	EA	*DISCONTINUED REPLACED BY 3017966*	
	N	903-5	3014078	19.09	EA	MOTOR 12 VDC SPINNER	365.00
	N	903-5	3014199	2.10	EA	CONTROLLER FOR SHPE0750/1500/2000/4000	758.00
	N	903-5	3014441	19.20	EA	MOTOR TGS 12 VDC .5 HP	259.00
	N	903-5	3014462	0.10	EA	SWITCH, ROCKER FOR 3006620, POWER & VIBR	12.00
	N	903-2	3014539	83.00	EA	CHAIN, D667H 3 CU YD SPREADER	482.69
	N	903-2	3014543		EA	INVERTED VEE 3 CU YD, WELDMENT	390.00
	N	903-2	3014545	39.00	EA	GRATE, WELDED 3 CU YD	315.00
	N	903-5	3014778	22.00	EA	MOTOR REPLACEMENT for GEAR MOTOR 3013821	701.85

Catalog Price List for Pricing in

*** Marking NEW Pricing on Items

For ALL Items in Catalogs

	N	903-5	3014858	0.27	EA	SLEEVE, AUGER ADAPTER	16.10
	N	903-2	3015129	81.00	EA	GRATE WELDED HOPPER TOP 53 IN	506.15
	N	903-5	3015371	4.90	EA	CONTROLLER,KIT TGS O8/09 AND OLDER SERV	350.52
	N	903-5	3015377	29.03	EA	GEAR MOTOR DUAL SHAFT, .4 HP 12 VDC	597.40
	N	903-2	3015382	4.40	EA	AUGER TGS07, BLACK	59.40
	N	903-2	3015554	70.20	EA	GRATE, WELDED HOPPER TOP	464.55
	Y	553-1	3015780	22.00	EA	AUGER, TG SPREADER, WELDMENT	225.00
	N	903-2	3015954	61.00	EA	CHUTE ASSEMBLY SHPE3000	1,115.00
	N	903-2	3015999	40.10	EA	TOP SCREEN SHPE3000	215.00
	Y	130	3016035	8.50	EA	BRACKET, HV715E AND HV1030E,	53.20
	N	903-5	3016212	2.10	EA	CONTROLLER KIT FOR 92440SSA, 1400600SS,	798.96
	N	903-2	3016231	1.72	EA	AUGER,TGS05 FINE MATERIALS	67.75
	N	903-2	3016233	2.28	EA	AUGER TGS01, TGSPRO FINE MATERIALS	67.75
	N	903-2	3016309	17.77	EA	MOTOR 12VDC, .5 HP SPINNER	379.20
	N	889	3016342	0.20	EA	TUBE,FLASH,NEW STYLE, SL640ALP &	11.50
	N	903-2	3016394	4.20	EA	SPINNER 14in POLY CCW	74.20
	N	903-5	3016934	3.50	EA	CONTROLLER FOR 1400 SERIES SPRDRS 09/10	765.00
	N	903-5	3016943	2.65	EA	POWER CORD	99.65
	N	903-5	3016944	10.49	EA	WIRE HARNESS MAIN	348.95
	N	903-5	3017075	220.00	EA	ADAPTER, SPREADER, DUMP BODY	756.20
	N	903-2	3017174	1.62	EA	COVER MOTOR, DRILLED	20.85
	N	903-5	3017233	0.20	EA	REPAIR KIT AUGER END, HARNESS #3006724	25.88
	N	903-5	3017238	0.20	EA	REPAIR KIT SPINNER END HARNESS #3006724	15.25
	N	903-2	3017358	67.00	EA	AUGER SHPE3000	575.00
	N	903-2	3017393		EA	INVERTED VEE SHPE3000	475.00
	N	903-2	3017487	83.01	EA	AUGER,WELDMENT,UTS DS DROP	686.08
	N	903-2	3017635	101.70	EA	GRATE WELDMENT 11 FT SPREADER SERV ONLY	722.80
	N	903-2	3017750	21.50	EA	GRATE, AUGER OPENING	152.00
	N	903-2	3017758	32.70	EA	CHUTE UPPER	362.00

Catalog Price List for Pricing in

*** Marking NEW Pricing on Items

For ALL Items in Catalogs

	N	903-2	3017966	64.00	EA	CHUTE ADJUSTABLE	1,236.90
	N	903-2	3018003	235.00	EA	STBRB 3030529 AUGER VARIABLE PITCH 7 OD	1,500.00
	N	903-2	3018007	5.70	EA	AUGER SHPE0750/1500/2000, SST	230.35
	N	903-2	3018242	89.40	EA	LOWER CHUTE ASSEMBLY	1,452.90
	N	900	3018358	16.50	EA	MOTOR,REPLACEMENT FOR GEAR	327.75
	N	900	3018359	12.50	EA	REPLACEMENT GEAR BOX FOR	314.50
	N	903-2	3018639	67.60	EA	AUGER SHPE 6.0 X 4.0 RH	1,198.00
	N	903-2	3018781	9.50	EA	SCREEN TGS07	46.70
	N	903-2	3018857	68.00	EA	SCREEN MESH HALF	232.50
	N	903-2	3018919	0.82	EA	BEARING, 1in DIA,2 HOLE FLANGE STAINLESS	32.90
	N	903-2	3018923	4.30	EA	DISC PROTECTOR, ORANGE	47.80
	N	903-5	3019085	8.00	EA	MOTOR REPLACEMENT FOR 3009995,APR 2012 +	287.10
	N	903-2	3019166	20.06	EA	VIBRATOR 900 LBS FORCE 12 VDC	572.00
	N	903-2	3019256	49.00	EA	CHUTE ASSEMBLY SHPE6000/SHPE4000	1,144.00
	N	903-2	3019561	3.20	EA	SPINNER 12 IN TGS	57.90
	N	903-2	3019690	64.00	EA	GEAR BOX 6:1 SPUR GEARS	1,180.00
	N	903-5	3019870	1.00	EA	SHAFT SPINNER FOR GEAR MOTOR #3015377	33.00
	N	903-2	3019902	52.11	EA	AUGER SHPE 5.25 OD VARIABLE PITCH RH	485.85
	N	903-5	3019913	48.30	EA	CHUTE ASSEMBLY SHPE2250	966.30
	N	903-2	3020127	5.00	EA	TARP SHPE2250	164.60
	N	903-5	3020301	0.20	EA	CONNECTOR KIT, TGS SERIES	14.80
	N	903-5	3020340	7.50	EA	VIBRATOR KIT 200LBS, TGS03	193.95
	N	903-2	3020569		EA	GRATE,WELDED HOPPER TOP	411.90
	N	903-5	3020624	8.00	EA	REMOTE GREASE KIT, V-BOX	275.80
	N	903-5	3020625	8.00	EA	V-BOX, CHAIN LUBRICATOR KIT	291.00
	N	903-5	3020626	22.00	EA	V-BOX CRANK-UP CHUTE KIT	438.00
	N	903-2	3020649	16.40	EA	SPINNER,ASSEMBLY,18IN	155.70
	N	903-2	3020704	30.50	EA	KIT, CHUTE EXTENSION	460.00
	N	903-1	3020766	61.40	EA	KIT, SIDE EXTENSIONS SCH, 6 IN SST	618.75

Catalog Price List for Pricing in

*** Marking NEW Pricing on Items

For ALL Items in Catalogs

	N	903-5	3021616	0.01	EA	SWITCH, ROCKER,PWR or VIB, FOR 3014199	12.00
	N	903-5	3021617	0.10	EA	COUPLER GEAR MOTOR 3015377	12.00
	N	903-5	3021928	7.15	EA	TARP KIT SHPE6000	266.00
	N	903-1	3022060	36.00	EA	LADDER,SPREADER,FOLDING,SST, FULL SIZE	698.00
	N	900	3022198	12.75	EA	SPINNER, 20 IN,WELDMENT, SST, CW	163.70
	N	903-5	3022215	0.63	EA	REMOTE GREASE KIT, SHPE	39.80
	N	900	3022224	12.75	EA	SPINNER, 20 IN,WELDMENT, SST, CCW	163.70
	N	903-1	3022963	81.60	EA	SPILL SHIELD, SST, FRONT, WELDMENT	778.00
	N	903-2	3022978	37.00	EA	SCREEN SHPE1000	207.50
	N	903-2	3022979	4.66	EA	TARP SHPE1000	132.00
	N	903-2	3023850		EA	GRATE WELDMENT 12 FT SPREADER SERV ONLY	632.95
	N	903-2	3023854	96.00	EA	GRATE WELDMENT 10 FT SPREADER SERV ONLY	778.15
	N	903-2	3024188	0.20	EA	CONNECTOR, REPAIR KIT, SHPE CONT/HARN	42.75
	N	903-2	3024512	80.01	EA	AUGER,WELDMENT,UTS CENTER DISCHARGE	702.00
	N	903-2	3024575	43.01	EA	GEAR MOTOR 12 VDC .75 HP	1,184.00
	N	903-2	3024587	14.31	EA	GEAR MOTOR 12 VDC DUAL SHAFT	380.00
	N	903-2	3024588	1.03	EA	AUGER, TGS02	42.98
	N	889	3024650	1.00	EA	KIT,STRAP,SST,F-150	98.90
	N	889	3024651	1.05	EA	KIT,STRAP,SST,F-250/350/450/550	98.90
	N	889	3024652	1.12	EA	KIT,STRAP,SST,RAM 1500/2500/3500	98.90
	N	903-5	3024738	0.40	EA	REPAIR KIT,AUGER CONNECTIONS, USE W/	90.00
	N	903-2	3025070	26.00	EA	CHUTE ASSEMBLY SHPE, STD LENGTH	749.10
	N	903-2	3025254	80.32	EA	INVERTED VEE, WELDMENT	334.00
	N	903-2	3025436	58.51	EA	TOP SCREEN HALF	395.80
	N	903-2	3025440	112.01	EA	*DISCONTINUED REPLACED BY 3030391*	1,284.35
	N	889	3025443	0.50	EA	TUBE, FLASH,XENON,SL500A STROBE	11.50
	N	903-1	3025885	1,038.00	EA	STAND,SPREADER,10ft-11ft,BLACK POWDER	2,530.00
	N	903-1	3025886	1,088.01	EA	STAND,SPREADER,12ft-13ft,BLACK POWDER	2,683.00
	N	903-1	3025887	1,138.01	EA	STAND,SPREADER,14ft-15ft,BLACK POWDER	2,824.00
	N	903-2	3026061	87.92	EA	*DISCONTINUED REPLACED BY 3031074*	1,205.00
	N	903-2	3026067	181.50	EA	CHUTE,LANE CHANGING,SST W/CONTROLLER,	

Catalog Price List for Pricing in

*** Marking NEW Pricing on Items

For ALL Items in Catalogs

	N	888	3026271	0.31	EA	MOUNT,MONITOR,W/2-SIDED TAPE &	15.12
	N	903-2	3026661	84.01	EA	AUGER KIT, UTS, LEFT SIDE DISCHARGE	579.18
	N	903-2	3027109	1.50	EA	ROD,LATCH,UTS TRAY SST CW	27.95
	N	903-2	3027110	1.50	EA	ROD,LATCH,UTS TRAY SST CCW	27.95
	N	903-1	3027468	1,038.00	EA	STAND,SPREADER,10ft-11ft,GALVANIZED	3,153.00
	N	903-1	3027469	1,088.01	EA	STAND,SPREADER,12ft-13ft,GALVANIZED	3,370.00
	N	903-1	3027470	1,138.01	EA	STAND,SPREADER,14ft-15ft,GALVANIZED	3,569.00
	N	903-2	3027636	1.30	EA	SHAFT,GEAR MOTOR FOR 3015377 MFG 2012 +	43.40
	N	903-2	3027661	4.20	EA	MOTOR REPLACEMENT FOR 3024587	210.00
	N	903-2	3027935	1.76	EA	ROD,LATCH,UTS TRAY CS CW	12.66
	N	903-2	3027936	1.75	EA	ROD,LATCH,UTS TRAY CS CCW	12.66
	N	903-2	3028143	55.01	EA	TOP SCREEN HALF,9FT SPREADER	361.62
	N	903-2	3028154	50.01	EA	TOP SCREEN HALF,8FT SPREADER	321.45
	N	903-5	3028195	5.40	EA	VIBRATOR KIT, 80 LBS, TGS02	214.57
	N	903-5	3028284	2.00	EA	REPAIR KIT FOR GEAR MOTOR 3015377	129.16
	N	903-5	3028636	8.00	EA	DISC PROTECTOR, BLACK	47.80
	N	619	3028968	328.01	EA	LIQUID SPRAY SYSTEM 2 X 105 GAL	3,018.00
	N	903-5	3029434	20.10	EA	SPINNER 20 IN SST CCW	198.90
	N	902	3029462	2.85	EA	BRACKET, WELD-ON, HV715/HV1030,	
	N	889	3029961	1.25	EA	BRACKET, MOUNTING, GALVANIZED,	19.95
	N	903-5	3030179	5.66	EA	SPINNER 18 IN POLY CW	96.80
	N	903-5	3030222	12.90	EA	GEAR MOTOR, CHUTE	399.80
	N	903-5	3030391	87.00	EA	CHUTE ADJUSTABLE, ELECTRO SST	1,467.35
	N	903-5	3030562	7.80	EA	MOTOR,REPLACEMENT FOR 3030222 GEAR MOTOR	265.50
	N	639	3030859	1.40	EA	HARNESS 15 FT LG FOR HVE 1 SPOOL	114.40
	N	639	3030861	0.98	EA	SWITCH BOX FOR HVE 1 SPOOL VALVE	85.58
	N	903-5	3031517	61.40	EA	KIT, SIDE EXTENSIONS, SHPE2000, 0.5CY	690.70
	N	903-1	3031543	238.82	EA	KIT, SIDE EXTENSION, 1400500, 12in,	1,426.00
	N	903-1	3031544	169.61	EA	KIT, SIDE EXTENSION, 1400550, 6in,	864.00
	N	993	3033585	1.84	EA	BASE,DISPLAY,DRILL-FREE LIGHTBAR	
	N	619	3034123	10.01	EA	VALVE, SERVO CONTROL, 3-WAY, 2in,	
	N	903-5	3034238	14.30	EA	SPREADER HOSE CONNECTION KIT	239.52

Catalog Price List for Pricing in

*** Marking NEW Pricing on Items

For ALL Items in Catalogs

	Y	390	4F32SCR	6.96	EA	FLANGE UNIT,4-HOLE,2in,SET SCREW	45.77
	N	523	5232001	21.20	EA	TRUCK STEP, RETRACTABLE LADDER,	259.90
	N	523	5233001	24.90	EA	TRUCK STEP, RETRACTABLE LADDER,	296.50
	Y	553	5535000	291.00	EA	SPREADER, DUMP INSERT,STAINLESS	3,950.00
	N	556	5562001	2.50	EA	TRUCK SUSPENSION KIT,GM,FRONT	139.75
	N	556	5562009	5.09	EA	SUSPENSION	139.75
	N	556	5562112	5.70	EA	LEVELING KIT,	124.98
	N	560	5601000	0.04	EA	FUSE TAP,DUAL ATM TYPE,MINI,12VDC	10.75
	N	560	5601007	0.04	EA	FUSE TAP,DUAL ATR	11.94
	N	560	5601010	0.04	EA	FUSE TAP,DUAL ATO/ATC TYPE,12VDC	10.75
	N	560	5601015	0.78	EA	REPLACEMENT KIT, QUICK CONNECT	31.95
	N	560	5601016	0.78	EA	REPLACEMENT KIT,BLUE QUICK	31.95
	N	560	5601020	2.70	EA	CABLE,BATTERY,6 FT w/GRAY QUICK	42.50
	N	560	5601021		EA	CABLE,BATTERY,6FT W/BLUE QUICK	42.50
	N	560	5601025	13.00	EA	CABLES,BOOSTER,28 FT W/GRAY PLUG-	143.35
	N	560	5601026	13.00	EA	CABLES,BOOSTER,28FT W/BLUE PLUG-	143.35
	N	560	5601100	0.74	EA	BOX,JUNCTION,ELECTRICAL,PLASTIC	10.90
	N	560	5601101	0.58	EA	BOX,JUNCTION,ELECTRICAL,PLASTIC	10.50
	N	560	5609000	3.19	EA	UNIVERSAL,REAR DOT TRUCK & TRLR	159.50
	N	560	5609001	3.33	EA	UNIVERSAL,REAR DOT TRUCK & TRLR	162.50
	N	562	5621001	0.07	EA	CONTROLLER,STROBE,LED,12VDC,1.25	22.50
	N	562	5621010	0.12	EA	EQUALIZER,LED TURN SIGNAL	10.70
	N	562	5621012	0.15	EA	EQUALIZER,LED SIGNAL W/PL3 PLUG	11.50
	Y	562-1	5621827	0.31	EA	LIGHT,STRIP,18in,CLEAR,WARM,12VDC, 27LED	23.85
	N	562	56218270	0.34	EA	LIGHT,STRIP,18in,CLEAR,WARM,12 VDC	39.00
	Y	562-1	5621928	0.31	EA	LIGHT,STRIP,18in,CLEAR,COOL,12VDC,27 LED	23.85
	N	562	5622101	0.18	EA	LIGHT,2in ROUND,MARKER,1 LED,RED	5.65
	Y	562-1	5622436	0.35	EA	LIGHT,STRIP,24in,CLEAR,WARM,12VDC, 36 LED	30.60
	N	562	56224360	0.39	EA	LIGHT,STRIP,24in,CLEAR,WARM,12 VDC	45.80
	N	562	5622514	0.25	EA	LIGHT,2.5in RD,MARKER,4 LED,RED,W/	7.10
	Y	562-1	5622537	0.35	EA	LIGHT,STRIP,24in,CLEAR,COOL,12VDC,36 LED	30.60
	Y	562-1	5622638	0.35	EA	LIGHT,STRIP,24in,RED,12VDC,36 LED	32.60
	Y	562-1	5622739	0.35	EA	LIGHT,STRIP,24in,BLUE,12VDC,36 LED	32.60
	Y	562-1	5623654	0.40	EA	LIGHT,STRIP,36in,CLEAR,WARM,12VDC, 54LED	39.78
	N	562	56236540	0.43	EA	LIGHT,STRIP,36in,CLEAR,WARM,12 VDC	53.90
	Y	562-1	5623755	0.40	EA	LIGHT,STRIP,36in,CLEAR,COOL,12VDC,54 LED	39.78
	N	562	5624110	0.70	EA	LIGHT,4in ROUND,STOP/TURN/TAIL,10	16.00
	N	562	5624310	0.70	EA	LIGHT,4inRD,BACK-UP,10 LED,CLEAR,W/	32.60
	Y	562-1	5624872	0.44	EA	LIGHT,STRIP,48in,CLEAR,WARM,12VDC, 72 LED	49.80
	N	562	56248720	0.47	EA	LIGHT,STRIP,48in,CLEAR,WARM,12 VDC	65.00
	Y	562-1	5624973	0.44	EA	LIGHT,STRIP,48in,CLEAR,COOL,12VDC,72 LED	49.80
	Y	562-1	5625074	0.44	EA	LIGHT,STRIP,48in,RED,12VDC,72 LED	52.20

Catalog Price List for Pricing in

*** Marking NEW Pricing on Items

For ALL Items in Catalogs

	Y	562-1	5625175	0.44	EA	LIGHT,STRIP,48in,BLUE,12VDC,72 LED	52.20
	N	562	5626090	0.55	EA	LIGHT,STRIP,60in,CLEAR,WARM,12 VDC	62.50
	N	562	5626191	0.55	EA	LIGHT,STRIP,60in,CLEAR,COOL,12	62.50
	Y	562-1	5626292	0.55	EA	LIGHT,STRIP,60in,AMBER,12VDC,90 LED	62.30
	N	562	5626310	0.70	EA	LIGHT,6.5in OVAL,BACK-UP,10	32.95
	N	562	5626510	0.70	EA	LIGHT,6.5in OVAL,STOP/TURN/TAIL,10	16.40
	N	562	56296144	0.88	EA	LIGHT,STRIP,96in,CLEAR,WARM,12VDC,	93.50
	N	562	56297145		EA	LIGHT,STRIP,96in,CLEAR,COOL,12VDC,1	93.50
	N	562	56298146	0.88	EA	LIGHT,STRIP,96in,AMBER,12VDC,144LE	93.50
	N	619	6190000	70.00	EA	SPRAY SYSTEM, LESS BAG	3,424.00
	N	619	6191000	52.00	EA	HOSE REEL,3/8X50ft w/SPRAY NOZZLE	796.00
	N	619	6191010	52.00	EA	*DISCONTINUED*HOSE	
	N	619	6196335	80.00	EA	SPRAY SYSTEM, LIQUID,IN BED,335	3,974.00
	N	619	6198335	154.00	EA	SPRAY SYSTEM, LIQUID,IN BED,335	3,974.00
	N	621	62100001	76.00	EA	MOTOR, HYDRAULIC,59.97 CU IN	2,000.00
	N	902	6380020	0.50	EA	JOYSTICK, DUAL AXIS, HALL EFFECT	
	N	902	6380030	0.50	EA	AMPLIFIER, PWM OUTPUT, 8 CHANNEL	
	N	639	6391001	0.22	EA	SWITCH PANEL,SINGLE,ON-OFF	22.25
	N	639	6391002	0.29	EA	SWITCH PANEL,DOUBLE,ON-OFF	26.40
	N	639	6391003	0.35	EA	SWITCH PANEL,TRIPLE,ON-OFF	32.74
	N	639	6391004	0.53	EA	SWITCH PANEL,QUAD,ON-OFF	43.70
	N	639	6391005	2.42	EA	BATTERY DISCONNECT	72.90
	N	639	6391050	0.71	EA	BATTERY DISCONNECT	43.00
	N	639	6391100	0.01	EA	SWITCH,ROCKER,12VDC ON/OFF RED,	4.25
	N	639	6391101	0.02	EA	SWITCH,ROCKER,12VDC ON/OFF RED,	2.62
	N	889	6391102	0.01	EA	SWITCH, ROCKER, ON-OFF MINI ROUND	2.45
	N	889	6391103	0.01	EA	SWITCH, ROCKER, ON-OFF-ON MINI	2.80
	N	639	6391104	2.40	EA	SWITCH BOX,4-	62.90
	N	889	6391105	0.01	EA	SWITCH, ROCKER, MOMENTARY (ON)-	4.60
	N	639	6391106	2.90	EA	SWITCH BOX,6-	73.60
	N	639	6391204	0.27	EA	SWITCH PANEL, (3) ON/OFF, (1)	31.80
	N	639	6391207	0.39	EA	SWITCH PANEL,ARROW STICK,(4)	117.35
	N	639	6391215	1.00	EA	SWITCH PANEL,ON-OFF W/FLASH	27.90
	N	888	8881105	2.90	EA	*DISCONTINUED*CAMERA,COLOR,10-30	
	N	888	8881109	0.23	EA	CAMERA,RECESSED MOUNT,COLOR,12	99.75
	N	888	8881200	4.90	EA	REAR OBSV SYS,7in CLR,CAM-AUDIO	359.85
	N	888	8881205	3.00	EA	*DISCONTINUED RPLCD BY	
	N	888	8881211	1.20	EA	CAMERA,COLOR,STANDARD,W/AUDIO,	178.64
	N	888	8881212	1.00	EA	CAMERA,COLOR,BULLET,RECESSED	109.72
	N	888	8881213	0.35	EA	*DISCONTINUED*CAMERA,COLOR,SPH	
	N	888	8881214	0.58	EA	CAMERA, COLOR,SIDE,UNIVERSAL	199.34
	N	888	8881216	0.31	EA	CAMERA,COLOR,LICENSE PLATE	178.64
	N	888	8881221	0.60	EA	CABLE,16ft, FOR REAR OBSV SYSTEM(4-	12.60
	N	888	8881222	1.00	EA	CABLE,32ft, FOR REAR OBSV SYSTEM	21.60
	N	888	8881224	1.90	EA	CABLE,65ft, FOR REAR OBSV SYSTEM	36.00
	N	888	8881225	2.50	EA	CABLE,82ft, FOR REAR OBSV SYSTEM	48.00
	N	888	8881247	2.30	EA	REAR OBSV SYS,7in QUAD SCREEN,	348.50
	N	888	8881250		EA	REAR OBSV SYS,7in CLR,LICENSE	359.85

Catalog Price List for Pricing in

*** Marking NEW Pricing on Items

For ALL Items in Catalogs

	N	888	8881260	4.20	EA	REAR OBSV SYS,7in CLR, RECESSED	306.00
	N	888	8881270	4.90	EA	REAR OBSV SYS,7in CLR, QUAD	496.00
	N	888	8882000	2.00	EA	*DISCONTINUED*	
	N	888	8882100	4.20	EA	REAR OBSV SYS,7in CLR,CAM-	349.99
	N	888	8882111	1.46	EA	CAMERA,WIRELESS,COLOR,AUDIO,NIG	149.99
	N	888	8882200	4.50	EA	REAR OBSV SYS,7in CLR,CAM,FORD	359.99
	N	888	8882300	3.07	EA	REAR OBSV SYS,4.3in MIRROR	249.99
	N	889	8891001	1.40	EA	BRACKET,MOUNTING,MIRROR,BEACON	49.90
	N	889	8891002	0.99	EA	GUARD,BRANCH,BEACON,BLACK	27.90
	N	889	8891004	0.60	EA	LIGHT,STROBE,4-7/8in	47.80
	N	889	8891006	0.60	EA	LIGHT,STROBE,4-7/8in RECT,4 LED,	55.80
	N	889	8891007	0.16	EA	BRACKET,MOUNT, ALUM,FOR	15.90
	N	889	8891010	0.70	EA	BRACKET,MOUNTING,BLACK PWD	29.90
	N	889	8891015	1.20	EA	LIGHT,STROBE,4.50in ROUND,6 LED,	88.90
	N	889	8891016	0.85	EA	LIGHT,STROBE,4in,16-LED,ROAD	29.95
	N	889	8891018	6.42	EA	LIGHT,STROBE,4in,16-LED, ROAD	194.90
	N	889	8891020	5.00	EA	LIGHTBAR,MINI,HALOGEN,AMBER,MAG	159.80
	N	889	8891024	1.58	EA	LIGHTBAR,DASH,12LED,12-24V,AMBER	149.90
	N	889	8891025	1.58	EA	LIGHTBAR,DASH,12 LED,12-	149.90
	N	889	8891040	3.50	EA	LIGHTBAR,MINI,LED,12-24 VDC,AMBER,	159.80
	N	889	8891042	3.50	EA	LIGHTBAR,MINI,24-LED 12-24	159.80
	N	889	8891044	3.50	EA	LIGHTBAR,MINI,LED,12-24 VDC, BLUE,	159.80
	N	889	8891048	3.50	EA	LIGHTBAR,MINI,LED,12-24 VDC, GREEN,	159.80
	N	889	8891049	3.50	EA	LIGHTBAR,24 LED,12-24	159.80
	N	889	8891050	4.00	EA	LIGHTBAR,MINI,LED,12VDC,AMBER,MA	179.80
	N	889	8891052	4.00	EA	LIGHTBAR,MINI,24	179.80
	N	889	8891060	5.50	EA	LIGHTBAR,MINI,LED,10-30 VDC,AMBER-	275.48
	N	889	8891062	6.13	EA	LIGHTBAR,MINI,LED,12-24	275.48
	N	889	8891070	5.00	EA	LIGHTBAR,MINI,LED,10-30 VDC,AMBER	310.90
	N	889	8891071	4.70	EA	LIGHTBAR,MINI,LED,10-30 VDC, AMBER,	307.00
	N	889	8891080	3.10	EA	LIGHTBAR,MINI,LED,12-24VDC,AMBER	199.80
	N	889	8891082	3.10	EA	LIGHTBAR,MINI,LED,12-	199.80
	N	889	8891083	3.10	EA	*DISCONTINUED	199.80
	N	889	8891090	7.78	EA	LIGHTBAR,MINI,LED 12 VDC,3 AMP,SAE	373.50
	N	889	8891091	1.70	EA	BRACKET,MOUNTING,BLK,FOR 8891090	25.00
	N	889	8891100	9.25	EA	LIGHTBAR,MINI,LED 12-24 VDC,AMBER	447.30
	N	889	8891102	9.25	EA	LIGHTBAR,MINI,30 LED 12-24	447.30
	N	889	8891104	0.60	EA	LIGHT,STROBE,4-7/8in,4-LED,AMBER,	59.80
	N	889	8891105	0.60	EA	LIGHT,STROBE,4-7/8in,4-	65.40
	N	889	8891120	0.20	EA	LIGHT,STROBE,3-7/8in,3 LED, AMBER,	49.82
	N	889	8891121	0.20	EA	LIGHT,STROBE,3-7/8in,3 LED, CLEAR,	49.82
	N	889	8891130	0.24	EA	LIGHT,STROBE,4-3/4in,4 LED, AMBER,	59.90
	N	889	8891131	0.24	EA	LIGHT,STROBE,4-3/4in,4 LED, CLEAR,	59.90
	N	889	8891132	0.24	EA	LIGHT,STROBE,4-3/4in,4	59.90
	N	889	8891140	0.24	EA	*DISCONTINUED*LIGHT,STROBE,4-3/4in,	59.90
	N	889	8891144	21.00	EA	LIGHT	635.25
	N	889	8891145	26.84	EA	LIGHTBAR,SPREADER,LED,SST,MARKE	635.25
	N	889	8891150		EA	LIGHTBAR,SPREADER,LED,SST,MARKE	731.45
	N	889	8891166	30.00	EA	LIGHT	776.70
	N	889	8891167	30.00	EA	LIGHT	752.70

Catalog Price List for Pricing in

*** Marking NEW Pricing on Items

For ALL Items in Catalogs

	N	889	8891168	36.94	EA	LIGHTBAR,SPREADER,LED,SST,MARKE	776.70
	N	889	8891169	36.62	EA	LIGHTBAR,SPREADER,LED,SST,MARKE	752.70
	N	889	8891177		EA	LIGHTBAR,SPREADER,LED,SST,MARKE	776.70
	N	889	8891178		EA	LIGHTBAR,SPREADER,LED,SST,MARKE	752.70
	N	889	8891200	0.04	EA	BRACKETS,LIGHT,STROBE,CRM SURF	14.40
	N	889	8891201	0.04	EA	BRACKETS,LIGHT,STROBE,BLK SURF	9.00
	N	889	8891215	1.25	EA	LIGHT,STROBE,LED CLEAR 15ft CBL,IN-	198.90
	N	889	8891216	1.25	EA	LIGHT,STROBE,LED AMBER 15ft CBL IN	198.98
	N	889	8891225	1.60	EA	LIGHTS,STROBE,LED,CLEAR 25ft CABLE	218.90
	N	889	8891226	1.60	EA	LIGHTS,STROBE,LED,AMBER 25ft	218.90
	N	889	8891227	1.60	EA	LIGHTS,STROBE,6	234.96
	N	889	8891325	1.60	EA	LIGHTS,STROBE,LED,CLEAR 25ft CABLE	222.90
	N	889	8891326	1.60	EA	LIGHTS,STROBE,LED,AMBER 25ft	222.90
	N	889	8891327	1.60	EA	LIGHTS,STROBE,6	234.96
	N	889	8891400	0.16	EA	LIGHT,STROBE,3-3/8in ,3 LED, AMBER	89.75
	N	889	8891401	0.16	EA	LIGHT,STROBE,3-3/8in ,3 LED, CLEAR	89.75
	N	889	8891402	0.08	EA	BRACKET,MOUNTING,BLK PWDR COAT	15.90
	N	889	8891403	0.33	EA	LIGHT,STROBE,2-9/16in ,3 LED, AMBER	103.50
	N	889	8891404	0.33	EA	LIGHT,STROBE,2-9/16in ,3 LED, CLEAR	103.50
	N	889	8891405	0.04	EA	GROMMET,BLACK,3-3/8in, LIGHT	17.30
	N	889	8891500	0.25	EA	LIGHT,STROBE,5in, 6 LED, AMBER,12-24	117.40
	N	889	8891501	0.25	EA	LIGHT,STROBE,5in, 6 LED, CLEAR,12-24	117.40
	N	889	8891502	0.25	EA	LIGHT,STROBE,5in, 6 LED,	117.40
	N	889	8891505	0.25	EA	GROMMET,BLACK,5in,RECESSED	17.80
	N	889	8891506	0.16	EA	BRACKET,MOUNTING,BLACK POWDER	17.20
	N	889	8891600	0.42	EA	LIGHT,STROBE,5in,AMBER, 12 LED,10-	78.50
	N	889	8891601	0.42	EA	LIGHT,STROBE,5in,CLEAR, 12 LED,10-	78.50
	N	889	8891602	0.42	EA	LIGHT,STROBE,5in,1/2 AMBER, 1/2	78.50
	N	889	8891605	0.16	EA	BRACKET,MOUNT, ALUM,FOR	15.90
	N	889	8891700	0.42	EA	LIGHT,STROBE,5in,12 LED, AMBER,12-	147.80
	N	889	8891701	0.42	EA	LIGHT,STROBE,5in,12 LED, CLEAR,12-24	147.80
	N	889	8891702	0.42	EA	LIGHT,STROBE,5in,12 LED,	147.80
	N	889	8891703	0.42	EA	LIGHT,STROBE,5in,12 LED,RED,12-24	147.80
	N	889	8891704	0.42	EA	LIGHT,STROBE,5in,12 LED,BLUE,12-24	147.80
	N	889	8891705	0.12	EA	GROMMET,BLACK,5in,RECESSED	17.80
	N	889	8891706	0.70	EA	BRACKET,MOUNTING,BLACK PWD	18.50
	N	889	8891707	0.42	EA	LIGHT,STROBE,5in,12 LED,RED/BLUE,12-	147.80
	N	889	8891709	0.42	EA	LIGHT,STROBE,5in12	147.80
	N	889	8891800	0.65	EA	LIGHT,STROBE,2.85in,4 LED,AMBER,12-	71.90
	N	889	8891801	0.65	EA	LIGHT,STROBE,2.85in,4 LED,CLEAR,12-	71.90
	N	889	8891802	0.65	EA	LIGHT,STROBE,2.85in,4 LED,1/2	71.90
	N	889	8891803	0.65	EA	LIGHT,STROBE,2.85in,4 LED,RED,12-	71.90
	N	889	8891804	0.65	EA	LIGHT,STROBE,2.85in,4 LED,BLUE,12-	71.90
	N	889	8891900	0.09	EA	LIGHT,STROBE,4-3/8in,6-LED,AMBER	106.90
	N	889	8891901	0.09	EA	LIGHT,STROBE,4-3/8in,6-LED,CLEAR	106.90
	N	889	8891902	0.09	EA	LIGHT,STROBE,4-3/8in,6-	106.90
	N	889	8891903	0.09	EA	LIGHT,STROBE,4-3/8in,6-LED,RED	106.90
	N	889	8891904	0.09	EA	LIGHT,STROBE,4-3/8in,6-LED,BLUE	106.90
	N	889	8891910	0.09	EA	LIGHT,STROBE,4-3/8in,6-LED,AMBER	106.90
	N	889	8891911	0.12	EA	LIGHT,STROBE,4-3/8in,6-LED,CLEAR	106.90

Catalog Price List for Pricing in

*** Marking NEW Pricing on Items

For ALL Items in Catalogs

	N	889	8891912	0.09	EA	LIGHT,STROBE,4-3/8in,6-	106.90
	N	889	8891913	0.09	EA	LIGHT,STROBE,4-3/8in,6-LED,RED	106.90
	N	889	8891914	0.09	EA	LIGHT,STROBE,4-3/8in,6-LED,BLUE	106.90
	N	889	8891920	0.02	EA	BEZEL,CHROME,FOR 1900 SERIES	9.00
	N	889	8891921	0.03	EA	BEZEL, WHITE, FOR 1900 SERIES	9.00
	N	889	8891925	0.06	EA	BRACKET,MOUNTING,ALUMINUM,BLAC	17.20
	N	889	8892000	2.30	EA	LIGHTS,STROBE/MARKER,45 LED	248.90
	N	889	8892001	2.30	EA	LIGHTS,STROBE/MARKER,45 LED	248.90
	N	889	8892002	2.30	EA	LIGHTS,STROBE/MARKER,45 LED	248.90
	N	889	8892200	0.12	EA	LIGHT,STROBE,5-1/8in,6-LED,AMBER	69.60
	N	889	8892201	0.12	EA	LIGHT,STROBE,5-1/8in,6-LED,CLEAR	69.60
	N	889	8892202	0.12	EA	LIGHT,STROBE,5-1/8in,6-	69.60
	N	889	8892203	0.12	EA	LIGHT,STROBE,5-1/8in,6-LED,RED	69.60
	N	889	8892204	0.12	EA	LIGHT,STROBE,5-1/8in,6-LED,BLUE	69.60
	N	889	8892205	0.12	EA	LIGHT,STROBE,5-1/8in,6-LED,RED/BLUE	69.60
	N	889	8892206	0.12	EA	LIGHT,STROBE,5-1/8in 6-	69.60
	N	889	8892207	0.12	EA	LIGHT,STROBE,5-1/8in 6-	69.60
	N	889	8892208	0.12	EA	LIGHT,STROBE,5-1/8in 6-	69.60
	N	889	8892209	0.12	EA	LIGHT,STROBE,5-1/8in 6-LED,GREEN	69.60
	N	889	8892210	0.12	EA	LIGHT,STROBE,5-1/8in 6-	69.60
	N	889	8892225	0.07	EA	BRACKET,MOUNTING,ALUMINUM,BLAC	17.20
	N	889	8892230	0.08	EA	LIGHT,STROBE,3-1/2in,3-LED,AMBER, 12-	46.90
	N	889	8892231	0.08	EA	LIGHT,STROBE,3-1/2in,3-LED,CLEAR, 12-	46.90
	N	889	8892233	0.08	EA	LIGHT,STROBE,3-1/2in,3-LED,RED, 12-24	46.90
	N	889	8892234	0.08	EA	LIGHT,STROBE,3-1/2in,3-LED,BLUE, 12-	46.90
	N	889	8892239	0.08	EA	LIGHT,STROBE,3-1/2in,3-LED,GREEN, 12-	46.90
	N	889	8892240	0.10	EA	LIGHT,STROBE,4-3/8in,4-LED,AMBER, 12-	54.50
	N	889	8892241	0.10	EA	LIGHT,STROBE,4-3/8in,4-LED,CLEAR, 12-	54.50
	N	889	8892242	0.10	EA	LIGHT,STROBE,4-3/8in,4-	54.50
	N	889	8892243	0.10	EA	LIGHT,STROBE,4-3/8in,4-LED,RED,	54.50
	N	889	8892245	0.10	EA	LIGHT,STROBE,4-3/8in,4-LED,RED/BLUE,	54.50
	N	889	8892246	0.10	EA	LIGHT,STROBE,4-3/8in,4-	54.50
	N	889	8892247	0.10	EA	LIGHT,STROBE,4-3/8in,4-	54.50
	N	889	8892248	0.10	EA	LIGHT,STROBE,4-3/8in,4-	54.50
	N	889	8892249	0.10	EA	LIGHT,STROBE,4-3/8in,4-LED,GREEN,	54.50
	N	889	8892250	0.10	EA	LIGHT,STROBE,4-3/8in,4-	54.50
	N	889	8892300	0.11	EA	LIGHT,STROBE,3-3/8in,3-LED,AMBER	85.00
	N	889	8892301	0.11	EA	LIGHT,STROBE,3-3/8in,3-LED,CLEAR	85.00
	N	889	8892303	0.11	EA	LIGHT,STROBE,3-3/8in,3-LED,RED	85.00
	N	889	8892304	0.11	EA	LIGHT,STROBE,3-3/8in,3-LED,BLUE	85.00
	N	889	8892320	0.11	EA	BEZEL,CHROME,FOR 2300 SERIES	8.70
	N	889	8892321	0.11	EA	BEZEL,WHITE,FOR 2300 SERIES	8.70
	N	889	8892325	0.04	EA	BRACKET,MOUNTING,ALUMINUM,BLAC	15.90
	N	889	8892400	0.10	EA	LIGHT,STROBE,1in,3-LED,AMBER 12-24	67.00
	N	889	8892401	0.10	EA	LIGHT,STROBE,1in,3-LED,CLEAR 12-24	67.00
	N	889	8892403	0.10	EA	LIGHT,STROBE,1in,3-LED,RED 12-24	67.00
	N	889	8892404	0.10	EA	LIGHT,STROBE,1in,3-LED,BLUE 12-24	67.00
	N	889	8892420	0.10	EA	BEZEL,CHROME,FOR2400 SERIES	9.98
	N	889	8892425	0.05	EA	BRACKET,MOUNTING,ALUMINUM,BLAC	16.50
	N	889	8892500	0.09	EA	LIGHT,STROBE,2-1/4in,6-LED,AMBER,12-	41.00

Catalog Price List for Pricing in

***** Marking NEW Pricing on Items**

For ALL Items in Catalogs

	N	889	8892501	0.09	EA	LIGHT,STROBE,2-1/4in,6-LED,CLEAR,12-	41.00
	N	889	8892600	0.21	EA	LIGHT,STROBE,4-1/2in,12-LED,AMBER,	139.90
	N	889	8892601	0.21	EA	LIGHT,STROBE,4-1/2in,12-LED,CLEAR,	139.90
	N	889	8892602	0.21	EA	LIGHT,STROBE,4-1/2in,12-	139.90
	N	889	8892700	0.29	EA	LIGHT,STROBE,5in,3-LED,AMBER,12-24	84.00
	N	889	8892701	0.29	EA	LIGHT,STROBE,5in,3-LED,CLEAR,12-24	84.00
	N	889	8892703	0.29	EA	LIGHT,STROBE,5in,3-LED,RED,12-24	84.00
	N	889	8892704	0.29	EA	LIGHT,STROBE,5in,3-LED,BLUE,12-24	84.00
	N	889	8892709	0.29	EA	LIGHT,STROBE,5in,3-LED,GREEN,12-24	84.00
	N	889	8894037	6.60	EA	LIGHTBAR,37in,24LED,12-24V,AMBER	519.75
	N	889	8894047	7.50	EA	LIGHTBAR,47in,32LED,12-24V,AMBER	599.70
	N	889	8894050	0.50	EA	BRACKETS,MTG,STL,BLACK PC	15.70
	N	889	8895095	7.25	EA	MOUNT,LIGHTBAR,CAB & CHASSIS,1500-	259.00
	N	889	8895100	7.25	EA	MOUNT, LIGHTBAR, 1500-3500,	259.00
	N	889	8895105	7.25	EA	MOUNT, LIGHTBAR,	259.00
	N	889	8895110	7.25	EA	MOUNT, LIGHTBAR,	299.00
	N	889	8895150	7.25	EA	MOUNT, LIGHTBAR, F150, FORD 2015+	259.00
	N	889	8895250	7.25	EA	MOUNT, LIGHTBAR, F250-	259.00
	N	889	8895300	7.25	EA	MOUNT, LIGHTBAR, RAM/DODGE, 2010-	259.00
	N	889	8895350	7.25	EA	MOUNT, LIGHTBAR, CAB	259.00
	N	900	9001001	4.50	EA	*DISCONTINUED*SHOVEL,SNOW,24.5in	
	N	903-1	9031100	28.00	EA	BOX,POLY,SALT,36in W x 24in D x 30in T,	198.90
	N	903-1	9031105	21.00	EA	BOX,POLY,SALT,36in W x 24in D x 20in T,	198.90
	N	903-1	9031110	2.47	EA	SCOOP, SALT, BLACK PE	17.90
	N	903-2	9031200	23.50	EA	MOTOR,12V,SPREADER, REPLACES WESTERN-	624.90
	N	903-2	9031201	6.80	EA	MOTOR, 12VDC, SPINNER W/10-COG PULLEY	218.90
	N	903-2	9032000	3.44	EA	MOTOR 12 VDC SPINNER REPLACES SNOWEX	230.85
	N	903-2	9032001	3.50	EA	GEAR BOX, SPINNER, REPLACES SNOWEX	245.68
	N	903-2	9032002	18.20	EA	MOTOR 12 VDC SPINNER REPLACES SNOWEX	463.27
	N	903-2	9032005	3.90	EA	MOTOR,12V,SPREADER REPLACES SNOW-EX	269.97
	N	903-2	9032020	2.50	EA	CONTROLLER SPREADER REPLACES SNOWEX	314.80
	N	903-2	9032021	3.50	EA	CONTROLLER REPLACES SNOWEX	586.50
	Y	903	9035000	520.00	EA	SPREADER,TAILGATE	4,499.00
	Y	903	9035100	502.00	EA	SPREADER,TAILGATE	4,499.00
	Y	903	9035101	502.00	EA	SPREADER,TAILGATE	4,499.00
	Y	903	9035102		EA	SPREADER,TAILGATE	4,758.00
	Y	903	9035103		EA	SPREADER,TAILGATE	4,758.00
	N	903-2	9240016	7.19	EA	SPINNER,18in,POLYRTHN,CCW,SDD	96.80
	N	903-2	9240016A	7.19	EA	SPINNER,POLY,DISC,18in,SDD,CW,HOLES	96.80

Catalog Price List for Pricing in

*** Marking NEW Pricing on Items

For ALL Items in Catalogs

	N	903-2	9240020	9.65	EA	SPINNER,UNIVERSAL 20in DIA,CCW	113.45
	N	903-5	9240021B	0.15	EA	PIN BRACE, SDD,CS	5.80
	N	903-5	9240083	0.27	EA	SLEEVE, AUGER, (SDD)	14.95
	N	903-5	9240086	1.19	EA	BEARING, SDD	17.36
	N	903-5	9240087	0.01	EA	GASKET,FELT BEARING SDD	3.50
	N	903-5	9240089	29.60	EA	GEARBOX, 5:1	597.00
	N	903-5	9242001A	63.00	EA	SPINNER & HARDWARE	679.14
	Y	903	92420A	541.00	EA	SPREADER,UTS,STND,CS,ORANGE,DD	2,950.00
	Y	903	92420SSA	482.00	EA	SPREADER,UTS,STND,304SST,DD	3,990.00
	Y	903	92421SSA	575.01	EA	SPREADER,UTS,STND,304SST,DD TALL	4,890.00
	Y	903	92422SSA	575.01	EA	SPREADER,UTS,STND,304SST,DD,HAR	4,258.00
	Y	903	92425SSA	460.00	EA	SPREADER,UTS,DS,304SST,DD	4,490.00
	Y	903	92426SSA	575.00	EA	SPREADER,UTS,DS,304SST,DD TALL	4,890.00
	Y	903	92427SSA	575.01	EA	SPREADER,UTS,DS,304SST,DD,HARD	5,290.00
	Y	903	92428SSA	575.01	EA	SPREADER,UTS,CTR,304SST DD	4,690.00
	Y	903	92430A	551.00	EA	SPREADER,UTS,STND,CS,ORANGE,HYD	3,380.00
	Y	903	92430SSA	515.00	EA	SPREADER,UTS,STND,304SST,HYD 5:1	4,510.00
	Y	903	92440SSA	575.00	EA	SPREADER,UTS,STND,304SST,ELECTRI	5,245.00
	Y	903	92441SSA	575.01	EA	SPREADER,UTS,CTR,304SST,ELECTRIC	5,245.00
	Y	903	92441SSAH		EA	*DISCONTINUED REPLACED BY	
	Y	903	92450SSA	579.00	EA	SPREADER,UTS,9IN,STND,304SST,DD	6,290.00
	N	903-5	92451SS	55.01	EA	CHUTE, UTS, BERMER, SST	594.00
	Y	903	92452SSA	609.01	EA	SPREADER,UTS,9in,STND,304	
	N	903-5	924F00110	11.76	EA	FRAME,SPINNER 96in(FINISHED)	81.16
	N	903-5	924F0012	1.06	EA	LINKAGE,PARALLEL FINISHED	11.25
	N	903-5	924F0013	1.86	EA	LUG,SPINNER FINISHED	12.88
	N	903-5	924F0014	1.02	EA	BAR,FINISHED PAINTED BLACK	5.80
	N	903-5	924F0015	4.38	EA	SHIELD, SPINNER WELDMENT,CS	33.15
	N	903-2	924F0017A	1.81	EA	HUB,SPINNER ,CS UTS W/SET SCREW	33.80
	N	903-2	924F0017T	3.00	EA	HUB,SPINNER,UNIVERSAL,1in KEYED/CROSS	39.00
	N	903-5	924F0018	2.19	EA	ROD, HINGE FINISHED	14.25
	N	903-5	924F0081	83.00	EA	AUGER,FINISHED,FITS 96in UTS	440.00
	N	903-5	924F0081AK	84.00	EA	AUGER, 96in KIT (SDD)	489.10
	N	903-2	924F0084	1.84	EA	ADAPTOR, FINISHED	23.68
	N	903-5	924F0101	2.58	EA	HANGER IRON BRACE	8.20

Catalog Price List for Pricing in

*** Marking NEW Pricing on Items

For ALL Items in Catalogs

	N	903-5	924F0102	2.45	EA	PLATE,QUICK DETACH FNSH..	18.50
	N	903-5	924F0103	1.09	EA	PIN, HINGE (FINISHED)	8.36
	N	903-5	924F0106PR	20.00	PR	SHIELD,UTS TAILGATE PAIR	78.00
	N	903-5	924F0106SSPR	20.00	PR	SHIELD,UTS TAILGATE PAIR SST	156.30
	N	990	9901000	5.60	EA	GLOVES,WORK, CASE (10 pr ea XL &	259.60
	N	990	9901005	0.23	EA	GLOVES,WORK,BLK, LG	14.99
	N	990	9901010	0.23	EA	GLOVES,WORK,BLK, X-LG	14.99
	N	990	9901012	14.28	EA	STBD LUBE, SPRAY,1 CASE,(12 CANS,	107.70
	N	990	9901015	0.24	EA	GLOVES,WORK,BLK,XXL	14.99
	N	990	9901100	0.13	EA	HAT,KNIT,BLACK,DOGG LOGO,BAGGED	
	N	890	99105	143.00	EA	SHELVING,KIT,GONDOLA,W/12in	260.00
	N	992	9921000	0.45	EA	VEST,SAFETY,FL LIME,MEDIUM,CLASS	10.49
	N	992	9921005	0.50	EA	VEST,SAFETY,FL LIME,LARGE,CLASS II	10.49
	N	992	9921010	0.55	EA	VEST,SAFETY,FL LIME,XLARGE,CLASS	10.49
	N	992	9921015	0.60	EA	stbd VEST,SAFETY,FL LIME, XXLARGE,	10.49
	N	903-2	99400	29.00	EA	DISPLAY,FLOOR RACK TGS01/A/B/,TGS05A/B	198.00
	N	903-2	99420	17.50	EA	DISPLAY,TGSUV1/TGSUVPRO/TGS02/TGS03	105.20
	N	903-2	AB2H16F	1.00	EA	BEARING, 2 HOLE MOUNT, 1in I.D.	21.00
	N	903-2	AB2H18S	2.30	EA	BEARING, CONVEYOR,REPLACES WESTERN	16.54
	N	903-2	AB2H20S	2.50	EA	BEARING,CONVEYOR,REPLACES HENDERSON	13.63
	N	903-2	AB3H20F	1.15	EA	BEARING,3 HOLE MOUNT,1-1/4in I.D.	38.20
	N	220	ACC01	0.50	EA	CONSOLE,ACCESSORY PLATE KIT	14.30
	N	537	ATVS15A	39.00	EA	SPREADER, ATV 15 GALLON	455.10
	N	889	B210880	6.71	EA	BRACKET, SELF LEVELING	66.30
	N	240	B302845072	2.23	EA	CABLE,REMOTE VALVE	39.00
	N	240	B302845084	2.44	EA	CABLE,REMOTE VALVE	41.68
	N	240	B302845096	2.00	EA	CABLE,REMOTE VALVE	44.28
	N	624	B303035	0.75	EA	R.V.C. CONNECTION KIT, BUYERS 21	24.30
	N	889	B745229T	1.69	EA	LAMP-AMBER STROBE, PERM MOUNT	99.90
	N	889	B745236T	2.58	EA	LAMP,AMBER STROBE MAGNETIC MNT	109.90
	N	889	B766190A	5.50	EA	stbd LIGHTBAR,MINI,QUARTZ	151.80
	N	889	B766190B	5.00	EA	stbd LIGHTBAR,MINI,PERMANENT	137.00
	N	888	BA0972	0.42	EA	BACK UP ALARM, 97DB, STD.	28.88
	N	520	BA1	0.06	EA	ADAPTER,BATTERY BOLT,BULK	4.10
	N	888	BA102	0.60	EA	ALARM,BACK-UP,102 DECIBLE,SELF	30.25
	N	888	BA107	0.68	EA	ALARM,BACK-UP,107dB,SELF	31.65
	N	520	BA2	0.12	EA	ADAPTER,BATTERY,BOLT,SIDE	5.40
	N	520	BA3	0.07	EA	ADAPTER,BATTERY,BOLT,TOP	4.28
	N	520	BA4	0.01	EA	ADAPTER,BATTERY,TERMINAL TAP &	2.45
	N	520	BA5	0.01	EA	ADAPTER,BATTERY,TERMINAL TAP &	2.45
	N	645	BC12914	29.95	EA	CONSOLE BOX, ASSEMBLY	140.00
	N	520	CB1	0.04	EA	ADAPTER,TERMINAL,CIRCUIT	1.96

Catalog Price List for Pricing in

*** Marking NEW Pricing on Items

For ALL Items in Catalogs

	N	560	CB100PB	0.24	EA	CIRCUIT BREAKER,100AMP,PUSH-TO-	35.95
	N	560	CB120PB	0.24	EA	CIRCUIT BREAKER,120AMP,PUSH-TO-	35.95
	N	560	CB150PB	0.24	EA	CIRCUIT BREAKER,150AMP,PUSH-TO-	35.95
	N	560	CB200PB	0.24	EA	CIRCUIT BREAKER,200AMP,PUSH-TO-	39.75
	N	560	CB30PB	0.24	EA	CIRCUIT BREAKER,30 AMP,PUSH-TO-	35.95
	N	560	CB50PB	0.24	EA	CIRCUIT BREAKER,50 AMP,PUSH-TO-	35.95
	N	560	CB60PB	0.24	EA	CIRCUIT BREAKER,60 AMP,PUSH-TO-	35.95
	N	560	CB80PB	0.25	EA	CIRCUIT BREAKER,80 AMP,PUSH-TO-	35.95
	N	560	CB90PB	0.24	EA	CIRCUIT BREAKER,90 AMP,PUSH-TO-	35.95
	N	621	CM004P	12.74	EA	MOTOR,HYDRAULIC,4-BOLT, 3.17 CIPR	277.40
	N	621	CM004PH	12.75	EA	MOTOR,HYD REPLACES HENDERSON	279.42
	N	621	CM004S	13.89	EA	MOTOR,HYDRAULIC,4-BOLT,3.2 CIPR,1in	277.40
	N	621	CM012P	14.02	EA	MOTOR,HYD,2 BOLT 4.75 CIPR	283.20
	N	621	CM034P	13.37	EA	MOTOR,HYD,7.3 CIPR,4 BOLT	297.85
	N	621	CM074P	15.54	EA	MOTOR,HYDRAULIC,4-BOLT, 19 CIPR	331.95
	N	621	CM084P	16.50	EA	MOTOR,HYD, AUGER 4 BOLT 23.6 CIPR	339.80
	N	621	CM092P	23.17	EA	MOTOR,2 BOLT,24.9 CU IN, REPLACES	359.00
	N	621	CMSK	0.44	EA	SEAL KIT/ CM MOTORS PILOT ID 1.400	42.50
	N	295	FCB050013200	0.14	EA	BOLT,CARRIAGE, 1/2-13 x 2in, FULL	1.00
	N	295	FCB063011250	0.26	EA	BOLT,CRG,FTHD, 5/8-11 X 2.5, GR5, ZN	1.10
	N	295	FCB063011400	0.20	EA	BOLT,CRG,FTHD, 5/8-11 x 4, GR 5, ZN	2.98
	N	295	FNE050013053	0.04	EA	NUT, ELASTIC STOP,1/2-13,ZINC	0.24
	N	295	FNE063011069	0.08	EA	NUT-ELASTIC STOP 5/8in-11, ZN	0.50
	N	900	G18BA15	0.01	EA	BULB,REPL FOR RL650A,20 WATT	1.20
	N	902	GPS1	0.69	EA	GPS UNIT W/CONVERTER &	659.00
	N	900	H1310410D	0.29	EA	CASTER,STANDARD RPLCMNT FOR	9.10
	N	900	H1310410H	0.33	EA	CASTER W/BRAKE RPLCMNT FOR	9.10
	N	624	HCR050	4.29	EA	VALVE, CROSS RELIEF 1/2in SET	174.50
	N	624	HCR075	7.00	EA	VALVE,CROSSOVER RELIEF 3/4in	181.40
	N	624	HFDL075	7.71	EA	FLOW DIVIDER LEVER STYLE, 0-30 GPM	142.60
	N	624	HFDL075SAE	7.71	EA	FLOW DIVIDER LEVER STYLE, 0-30 GPM	117.80
	N	621	HM004P	10.67	EA	MOTOR,HYD, 4 BOLT 2.8 CIPR	450.53
	N	621	HM006P	11.30	EA	MOTOR HYDRAULIC SPINNER	615.92
	N	621	HM012P	8.91	EA	STBD MOTOR,HYD,2 BOLT 4.5 CIPR	473.62
	N	621	HM034P	9.90	EA	MOTOR,HYD,7.3 CIPR,4 BOLT	529.88
	N	621	HM074P	12.56	EA	MOTOR,HYDR,17.9 CIPR,4 BOLT	599.49
	N	621	HM084P	14.87	EA	MOTOR,HYD, AUGER 4 BOLT 22.6 CIPR	656.34
	N	520	HP12	0.07	EA	COTTER, HAIR PIN, 5/32in ZINC,	0.60
	N	624	HRV07516	2.20	EA	RELIEF VALVE,INLINE, #12 SAE PRESET	107.15
	N	902	HV020	6.09	EA	VALVE ONLY SINGLE 20 GPM	315.30
	N	902	HV1030	7.50	EA	VALVE ONLY 10/30 GPM	315.30
	N	902	HV1030E	8.12	EA	VALVE, SPREADER, ELECTRIC 40 GPM	1,039.84
	N	902	HV1030EP	27.64	EA	ELECTRIC HYDRAULIC SPREADER	1,730.44
	N	902	HV1030EPG	31.00	EA	ELECTRIC HYDRAULIC SPREADER	2,089.90
	N	902	HV1030LS	7.00	EA	VALVE SPREADER 10 GPM/30 GPM # 12	385.54
	N	902	HV1030SAE	7.00	EA	VALVE ONLY,10/30 GPM SAE THREADS	315.30
	N	636	HV515LS	7.00	EA	VALVE SPREADER 5/15 GPM # 12 SAE	382.54
	N	902	HV715	7.00	EA	VALVE ONLY 7/15 GPM	315.30
	N	902	HV715E	8.00	EA	VALVE, SPREADER, ELECTRIC 22 GPM	1,039.84
	N	902	HV715EP	30.00	EA	ELECTRIC HYDRAULIC SPREADER	1,730.44

Catalog Price List for Pricing in

*** Marking NEW Pricing on Items

For ALL Items in Catalogs

	N	902	HV715EPG	31.00	EA	ELECTRIC HYDRAULIC SPREADER	2,089.90
	N	902	HV715SAE	7.00	EA	VALVE ONLY,7/15 GPM SAE THREADS	315.30
	N	902	HVB	3.02	EA	CONTROL BX FOR HV715E/HV1030E	179.36
	N	902	HVC05	2.00	EA	CONTROLLER FOR HV715EP OR	354.60
	N	902	HVC06	2.50	EA	CONTROLLER W/GROUND SPEED	1,119.00
	N	902	HVC07	0.50	EA	*DISCONTINUED RPLCD BY GPS101*	
	N	902	HVC08		EA	CONVERTER,,HALL EFFECT	30.00
	N	902	HVC09		EA	CONVERTER,,VR, W/HARNESS,PLUGS	30.00
	N	902	HVC1	13.12	EA	CONSOLE ONLY, 14 in FOR HV715	59.90
	N	902	HVC1030	21.00	EA	VALVE & CONSOLE 10/30 GPM	354.90
	N	902	HVC715	20.77	EA	VALVE & CONSOLE 7/15 GPM	354.90
	N	624	HVE334PB	12.00	EA	VALVE, ELECTRIC 11GPM	1,293.35
	N	624	HVE344PB	12.00	EA	VALVE,ELECTRIC,11 GPM	1,432.24
	N	639	HVEH15	3.90	EA	HARNESS 15ft LG FOR HVE 3 SPOOL	198.80
	N	639	HVEH9	0.83	EA	HARNESS, 9FT POWER FOR HVE	68.24
	N	639	HVESB	0.98	EA	SWITCH BOX FOR HVE 3 SPOOL VALVE	103.20
	N	902	HVH15	1.02	EA	HARNESS, WIRE 15ft, VALVE SIDE	85.70
	N	902	HVH8	0.60	EA	HARNESS, WIRE 8ft, POWER SIDE	29.25
	N	902	HVH9	0.80	EA	HARNESS,WIRE 8 FT FOR HVC06	41.40
	N	624	HVKB	0.09	EA	KNOB FOR BUYERS HV715/HV1030	16.00
	N	070	K18N	0.03	EA	WOODRUFF KEY 1/4in x 1-1/8in	0.85
	N	903-2	KS301	0.06	EA	KEY-SCH, 3/16in SQ X 1in	0.76
	N	520	LB384	2.55	EA	LIGHT BOX, SINGLE OVAL,BOTH	45.25
	N	520	LB384SST	2.55	EA	LIGHT BOX, SINGLE OVAL,BOTH	95.00
	N	903-1	LB8443SST	19.00	EA	LIGHT BOX,44in ASSEMBLY	288.50
	N	903-1	LB8445SST	19.30	EA	LIGHT BOX,44in ASSEMBLY,MARKER & OVAL	288.50
	N	903-1	LB8663SST	28.00	EA	LIGHT BOX,66in ASSEMBLY	375.15
	N	903-1	LB8665SST	28.00	EA	LIGHT BOX,66in ASSEMBLY,MARKER & OVAL	375.15
	N	619	LS1	148.00	EA	WETTING SYSTEM, 12 VDC, 55 GAL,V-	1,648.00
	N	619	LS10	814.00	EA	WETTING SYSTEM, 12 VDC, 2X400 GAL,	7,600.00
	N	619	LS102H	43.25	EA	ENCLOSURE ASSY,WETTING SYST,HYD	3,058.00
	N	619	LS2	23.00	EA	WETTING SYSTEM ONLY, 12 VDC, NO	1,521.50
	N	619	LS3	210.00	EA	WETTING SYSTEM, 12 VDC, 2X55 GAL, V-	2,434.92
	N	619	LS4	214.00	EA	WETTING SYSTEM, 12 VDC, 105 GAL, V-	2,790.00
	N	619	LS4H	351.00	EA	WETTING SYSTEM, HYD,105 GAL,V-BOX	4,795.00
	N	619	LS4T	325.00	EA	WETTING SYSTEM, 12 VDC, 105 GAL,	2,790.00
	N	619	LS4TH	357.00	EA	WETTING SYSTEM, HYD, 105 GAL, SST	5,170.00
	N	619	LS5	348.00	EA	WETTING SYSTEM, 12 VDC, 2X105 GAL,	4,200.00
	N	619	LS5H	380.00	EA	WETTING SYSTEM, HYD, 105 GAL, V-	5,800.00
	N	619	LS6	116.40	EA	WETTING SYSTEM, 12 VDC, 30 GAL, V-	1,599.25
	N	619	LS6H	158.00	EA	*DISCONTINUED*	
	N	619	LS7	85.20	EA	WETTING SYSTEM, 12 VDC, 30 GAL, V-	1,537.25
	N	619	LS7H	126.00	EA	*DISCONTINUED*	
	N	619	LS8	197.00	EA	WETTING SYSTEM, 12 VDC, 2X30 GAL, V-	2,337.25
	N	619	LS8H	239.00	EA	WETTING SYSTEM, HYD, 2X30 GAL,V-	4,931.25
	N	619	LS9		EA	WETTING SYSTEM,12 VDC,30	1,648.00

Catalog Price List for Pricing in

*** Marking NEW Pricing on Items

For ALL Items in Catalogs

	N	619	LS9H	85.01	EA	WETTING SYSTEM, HYD, 30 GAL,	4,372.00
	N	900	PLB11SS	5.00	ST	BRACKET KIT,PLOW LIGHT,SST	137.30
	N	900	PLB12SS	11.10	ST	BRACKET KIT,PLOW LIGHT, EXTENDED,	147.30
	N	636	PU3593	34.00	EA	POWER UNIT,HYDRAULIC 12V	1,037.20
	N	636	PU3593LR	42.00	EA	POWER UNIT 4W/3W/(1) GAL 6X9	1,185.10
	N	636	PU3593LRV	42.00	EA	POWER UNIT 4W/3W (1) GAL RSVR	1,200.40
	N	636	PU5003	32.00	EA	POWER UNIT,HYDRAULIC 12V	606.50
	N	636	PU5007	35.00	EA	POWER UNIT,HYDRAULIC 12V	754.55
	N	900	PW22	67.00	PR	PRO-WING PLOW ATTACHMENT	264.40
	N	889	RL650A	1.83	EA	LIGHT,REVOLVING,12V W/MAG	27.20
	Y	903	SHPE0750	280.00	EA	SPREADER,HOPPER,STD CHUTE POLY	3,362.00
	Y	903	SHPE0750X	289.00	EA	SPREADER,HOPPER,EXT CHUTE POLY	3,471.00
	Y	903	SHPE1000	378.00	EA	SPREADER,HOPPER,STD CHUTE POLY	3,747.00
	Y	903	SHPE1000X	380.00	EA	SPREADER,HOPPER,EXT CHUTE POLY	3,864.00
	Y	903	SHPE1500	520.00	EA	SPREADER,HOPPER,STD CHUTE POLY	4,131.00
	Y	903	SHPE1500RED	520.00	EA	SPREADER,HOPPER,STD CHUTE POLY	4,281.00
	Y	903	SHPE1500X	529.00	EA	SPREADER,HOPPER,EXT CHUTE POLY	4,257.00
	Y	903	SHPE1500XRE	529.00	EA	SPREADER,HOPPER,EXT CHUTE POLY	4,407.00
	Y	903	SHPE1500XYE	529.00	EA	SPREADER,HOPPER,EXT CHUTE POLY	4,407.00
	Y	903	SHPE1500YEL	520.00	EA	SPREADER,HOPPER,STD CHUTE POLY	4,281.00
	Y	903	SHPE2000	560.00	EA	SPREADER,HOPPER,STD CHUTE POLY	4,497.00
	Y	903	SHPE2000RED	560.00	EA	SPREADER,HOPPER,STD CHUTE POLY	4,662.00
	Y	903	SHPE2000X	564.00	EA	SPREADER,HOPPER,EXT CHUTE POLY	4,659.00
	Y	903	SHPE2000XRE	564.00	EA	SPREADER,HOPPER,EXT CHUTE POLY	4,824.00
	Y	903	SHPE2000XYE	564.00	EA	SPREADER,HOPPER,EXT CHUTE POLY	4,824.00
	Y	903	SHPE2000YEL	560.00	EA	SPREADER,HOPPER,STD CHUTE POLY	4,662.00
	Y	903	SHPE2250	717.00	EA	SPREADER,HOPPER POLY ELECTRIC	5,968.00
	Y	903	SHPE2250RED	717.00	EA	SPREADER,HOPPER POLY ELECTRIC	6,135.00
	Y	903	SHPE2250YEL	717.00	EA	SPREADER,HOPPER POLY ELECTRIC	6,135.00
	Y	903	SHPE2500	986.00	EA	SPREADER,HOPPER POLY ELECTRIC	6,419.00
	Y	903	SHPE2500CH	1,023.00	EA	SPREADER,HOPPER POLY ELECTRIC	6,419.00
	Y	903	SHPE3000	945.00	EA	SPREADER,HOPPER POLY ELECTRIC 3	7,428.00
	Y	903	SHPE3000CH	945.01	EA	SPREADER,HOPPER POLY ELECTRIC	7,428.00
	Y	903	SHPE4000	896.00	EA	SPREADER,HOPPER POLY ELECTRIC 4	9,725.00
	Y	903	SHPE6000	1,134.00	EA	SPREADER,HOPPER POLY ELECTRIC 6	11,525.00
	N	889	SL40AR	0.70	EA	LIGHT,STROBE,4in ROUND, AMBER,(24)	47.70
	N	889	SL40CR	0.70	EA	LIGHT,STROBE,4in ROUND, CLEAR,(24)	58.30
	N	889	SL41AR	0.70	EA	LIGHT,STROBE,4in ROUND,AMBER,(24)	57.50
	N	889	SL475A	0.73	EA	BEACON,24-LED,AMBER,BATTERY,MAG	36.50
	N	889	SL500A	1.13	EA	LIGHT,STROBE,AMBER 12V-24V,	39.90
	N	889	SL501A	1.28	EA	BEACON,40-LED,AMBER,12-24	47.90
	N	889	SL620ALP	2.46	EA	BEACON,3-LED,AMBER,12-24 VDC,MAG-	119.90
	N	889	SL630A	2.65	EA	BEACON,3-LED,AMBER,12-24 VDC,MAG-	119.90
	N	889	SL640ALP	1.75	EA	LIGHT,STROBE AMBER,PERMANENT	99.00
	N	889	SL645ALP	2.40	EA	LIGHT,STROBE 6-LED,AMBER,8-FLASH,	131.00
	N	889	SL645CLP	2.40	EA	stbd LIGHT,STROBE,6-LED,CLEAR,8-	131.00
	N	889	SL646ALP	2.00	EA	STBD LIGHT,STROBE,6-LED,AMBER	125.98
	N	889	SL650A	1.50	EA	LIGHT,STROBE,MULTI-VOLT,12V-110V	64.45
	N	889	SL65AO	0.70	EA	LIGHT,STROBE,6.5in OVAL,	47.70
	N	889	SL65CO	0.70	EA	LIGHT,STROBE,6.5in OVAL, CLEAR,24	58.30

Catalog Price List for Pricing in

*** Marking NEW Pricing on Items

For ALL Items in Catalogs

	N	889	SL660A	2.00	EA	LIGHT,STROBE AMBER,6-5/16 DIA X 6-	99.00
	N	889	SL665A	2.66	EA	LIGHT,STROBE,6 LED,AMBER,8-	134.90
	N	889	SL66AC	0.70	EA	LIGHT,STROBE,6.5in	76.90
	N	889	SL66AG	0.70	EA	LIGHT,STROBE,6.5in	76.90
	N	889	SL66AO	0.70	EA	LIGHT,STROBE,6.5in OVAL, AMBER,(24)	66.90
	N	889	SL675ALP	2.35	EA	BEACON, 8-LED,AMBER,12-24 VDC,	159.70
	N	889	SL685ALP	1.63	EA	BEACON, 8-LED,AMBER,12-24 VDC	136.92
	N	889	SL695A	2.67	EA	BEACON,12-LED,AMBER,12-24	211.50
	N	889	SL696A	1.95	EA	BEACON,12-LED,AMBER,12-24	198.90
	N	638	SMR15S	53.00	EA	RESERVOIR,15 GAL,STL W/TEMP-	310.10
	N	638	SMR15SS	53.00	EA	RESERVOIR,15 GAL, SST W/TEMP-	642.90
	N	638	SMR15SSF10	55.80	EA	RESERVOIR,15 GAL, SST W/10 MICRON	847.40
	N	638	SMR15SSF25	55.80	EA	RESERVOIR,15 GAL, SST W/25 MICRON	847.40
	N	638	SMR30VESS	264.01	EA	RESERVOIR, 30 GAL, SST,W/VALVE	2,266.00
	Y	903	TGS01B	135.00	EA	SPREADER,TAILGATE,SALT	1,590.00
	Y	903	TGS02	76.50	EA	SPREADER TAILGATE, SALT, 3 CU FT	1,370.00
	Y	903	TGS03	160.00	EA	SPREADER TAILGATE SALT/SAND 8 CU	2,198.00
	Y	903	TGS03RED	160.00	EA	SPREADER TAILGATE SALT/SAND 8 CU	2,308.00
	Y	903	TGS03YEL	160.00	EA	SPREADER TAILGATE SALT/SAND 8 CU	2,308.00
	Y	903	TGS05B	212.00	EA	SPREADER,TG SALT,LOW PROFILE	2,016.00
	Y	903	TGS06	160.00	EA	SPREADER,TAILGATE,SALT	1,926.00
	Y	903	TGS07	230.00	EA	SPREADER,TG, SALT/SAND, 11 CU FT,	2,776.00
	Y	903	TGS07RED	230.00	EA	SPREADER,TG, SALT/SAND, 11 CU FT,	2,876.00
	Y	903	TGS07YEL	230.00	EA	SPREADER,TG, SALT/SAND, 11 CU FT,	2,876.00
	Y	903	TGSUV1B	68.00	EA	SPREADER,TAILGATE,SALT,ASSEMBLY	852.00
	Y	903	TGSUVPROA	74.00	EA	SPREADER,TAILGATE,W/SPEED	1,214.00
	N	537	UTVS16	57.50	EA	SPREADER,ATV,15 GALLON W/2in	518.50
	Y	903-3	WB100B	42.00	EA	SPREADER, WALK BEHIND, BLACK POWDER	
	Y	903-3	WB101G	43.00	EA	SPREADER, WALK BEHIND, BLACK ,GEAR BOX	344.00
	Y	903-3	WB200B	42.00	EA	SPREADER,WALK BEHIND,STAINLESS STEEL	
	Y	903-3	WB201G	43.00	EA	SPREADER, WALK BEHIND, SST ,GEAR BOX	598.00
	Y	903-3	WB400	67.00	EA	SPREADER, WALK BEHIND, WB400	798.00
	N	522	WJ215	0.25	EA	LATCH,DRAW,PLASTIC, RUBBER	6.20
	N	619	WSE1	2.00	EA	CONTROLLER,WET SPRAY SYSTEM	270.85
	N	619	WSE10	0.72	EA	VALVE,BALL,1/2in NPT,	61.30
	N	619	WSE11	0.20	EA	FILTER,3/4in NPT,6 GPM,300	45.00
	N	619	WSE3	4.78	EA	PUMP,12V,3GPM,45 PSI DIAPHRAGM	250.55
	N	619	WSE4	0.42	EA	SWITCH,PRESSURE,1/4in NPT	137.55

Henderson

Recap WorkSheet

KNAPHEIDE SINCE 1848

Customer Name	
Contact Ph.	
PO #	
Date	

Minimize	Product ID	Product Description	List Cost (Each Unit)	Unit Quantity	List Cost (Total)	Discount Type	Net Each	Extended Total (Net)
	Truck Hitch	Henderson Truck Hitch & Install Accessories	$ -	0	$ -	15%	$ -	$ -
	MKE-SA	Henderson Mark E Single Axle Dump Body	$ -	0	$ -	15%	$ -	$ -
	MKE-TI	Henderson Mark E Tandem Axle Dump Body, Trunnion Telescopic Hoist	$ -	0	$ -	15%	$ -	$ -
	MKE-TC	Henderson Mark E Tandem Axle Dump Body, Pin-to-Pin Telescopic Hoist	$ -	0	$ -	15%	$ -	$ -
	Munibody II	Henderson Munibody Combination Dump/Spreader Body	$ -	0	$ -	15%	$ -	$ -
	BBMAXX	Henderson BlackBelt MAXX Live Bottom Body	$ -	0	$ -	15%	$ -	$ -
	Mark 3	Henderson Mark 3 Dump Body	$ -	0	$ -	15%	$ -	$ -
	Plow-OWP FA-ST	Henderson Fixed Angle-Slotted Trip One Way Plow	$ -	0	$ -	15%	$ -	$ -
	Plow-OWP FT-REV	Henderson Full Trip Reversible One Way Plow	$ -	0	$ -	15%	$ -	$ -
	Plow RSP	Henderson Reversible Snow Plow	$ -	0	$ -	15%	$ -	$ -
	Plow MTP	Henderson Medium Trip Snow Plow	$ -	0	$ -	15%	$ -	$ -
	HWS	Henderson Heavy Duty Patrol Wing System	$ -	0	$ -	15%	$ -	$ -
	SD LWNG	Henderson Severe Duty Leveling Wing System	$ -	0	$ -	15%	$ -	$ -
	MMWNG	Henderson Light Duty Mid Mount Patrol Wing System	$ -	0	$ -	15%	$ -	$ -
	UBS	Henderson Underbody Scraper System	$ -	0	$ -	15%	$ -	$ -
	FSH I	Henderson FSH I Series Salt/Sand V-box Spreader	$ -	0	$ -	15%	$ -	$ -
	FSH II	Henderson FSH II Series Salt/Sand V-box Spreader	$ -	0	$ -	15%	$ -	$ -
	FSH III	Henderson FSH III Series Salt/Sand V-box Spreader	$ -	0	$ -	15%	$ -	$ -
	TGS	Henderson Under Tailgate Spreader	$ -	0	$ -	15%	$ -	$ -
	FRS	Henderson First Response Anti-Ice Spreader System	$ -	0	$ -	15%	$ -	$ -
	DCAST	Henderson Direct Cast Spinner Kit	$ -	0	$ -	15%	$ -	$ -
	PWS	Henderson Prewet System	$ -	0	$ -	15%	$ -	$ -
	LAS	Henderson Liquid Anti-ice Spraying System	$ -	0	$ -	15%	$ -	$ -
	BXT PRO	Henderson BrineXtreme Pro	$ -	0	$ -	5%	$ -	$ -
	BXT MOBILE	Henderson BrineXtreme Mobile Trailer	$ -	0	$ -	5%	$ -	$ -
	BXT ULTIMATE	Henderson BrineXtreme Ulitmate	$ -	0	$ -	5%	$ -	$ -
	BXT TRUCK FILL	Henderson BrineXtreme Truck Fill Pro	$ -	0	$ -	5%	$ -	$ -
						Contact Item(s) Total (Net)		$ -

Non-Contract Items (***Non-Brine Extreme Items ONLY***)

Description	List $ (Each	Unit QTY	List (Total)	Discount	Net Each	Net Total
			$ -	15%	$ -	$ -
			$ -	15%	$ -	$ -
			$ -	15%	$ -	$ -
			$ -	15%	$ -	$ -
			$ -	15%	$ -	$ -
			$ -	15%	$ -	$ -
			$ -	15%	$ -	$ -
			$ -	15%	$ -	$ -
			$ -	15%	$ -	$ -
			$ -	15%	$ -	$ -
			$ -	15%	$ -	$ -
			$ -	15%	$ -	$ -
			$ -	15%	$ -	$ -
			$ -	15%	$ -	$ -
			$ -	15%	$ -	$ -
			$ -	15%	$ -	$ -
			$ -	15%	$ -	$ -
			$ -	15%	$ -	$ -
			$ -	15%	$ -	$ -

Non-Contract Items (***For Brine Extreme Items ONLY***)

Description	List $ (Each	Unit QTY	List (Total)	Discount	Net Each	Net Total
			$ -	5%	$ -	$ -
			$ -	5%	$ -	$ -
			$ -	5%	$ -	$ -
					Non-Contract Item(s) Total (Net)	$ -

Please provide this recap page along with the individual product worksheet(s) when submitting your purchase order.

Order Total (Net) **$ -**

If this summary page is used for customer purchse order, customer must sign and date here.

Print Name _____ Date _____

Signature _____ Date _____

Effective December 2016

Select a Plow Hitch and Body (Mark E, Munibody, Blackbelt Maxx) for Base Package

Standard Installation

MUST SELECT ONE OF THE HENDERSON TRUCK HITCHES LISTED. THE PRICE INCLUDES THE HYDRAULICS AND INSTALLATION . THE FOLLOWING IS INCLUDED IN THE STANDARD INSTALLATION WITH THE HITCH:

- **Installation of Front Plow Hitch (Wing System Installation with Power Tilt Hitch)**
- **Front Mount Load Sense Pump with Low Oil Shutdown Sized for Application**
- **Cable Controls / Levers / Valves for front plow**
- **Plow lights and Bracket installed on hitch**
- **Includes hoses, fittings and quick disconnects**
- **Includes freight and delivery**

SNOW PLOW/WING SYSTEM TRUCK HITCHES
PRICE LIST

***MUST SELECT** One Type of Truck Hitch for Your Application (Wing Systems require leveling or patrol wing hitches)*

SELECT (X)	DESCRIPTION		LIST PRICE	EXTENDED
	Pin hitch, low profile	*Available in 21", 30.5", and 33.5" widths	$ 16,838	$ -
	Pin hitch, manual tilt	*Available in 21", 30.5", and 33.5" widths	$ 16,926	$ -
	Pin hitch with QCP (pin/loop)		$ 18,294	$ -
	Quick hitch, low profile	* Available in 30.5" and 33.5" widths	$ 16,894	$ -
	Quick hitch, manual tilt	* Available in 30.5" and 33.5" widths	$ 17,052	$ -
	Flat plate hitch	* (C.U.P-100 connector suggested)	$ 16,905	$ -
	Pin & Loop Hitch		$ 17,506	$ -
	Quick Link Hitch		$ 17,689	$ -
	29" Husting		$ 16,756	$ -
	34" Husting Hitch		$ 16,888	$ -
	Torlock/Arrowhead low profile Hitch		$ 17,556	$ -
	POWER TILT LEVELING OR PATROL WING PIN HITCH (4" NITRIDED LIFT CYLINDER)		$ 25,910	$ -
	POWER TILT LEVELING OR PATROL WING QUICK HITCH (4" NITRIDED LIFT CYLINDER)		$ 25,847	$ -
	NON TILTING(STATIONERY) LEVELING OR PATROL WING PIN HITCH		$ 25,488	$ -
	MTP PLOW HITCH SYSTEM - FORD 2008+	Hitch System Installed (Required)-Includes Force America Hydraulics with VT Reservoir & Force One System Controls, Plow Lights, Hoses & Fittings, Freight	$ 21,531	$ -
	MTP PLOW HITCH SYSTEM - DODGE 2008+		$ 21,531	$ -
	MTP PLOW HITCH SYSTEM - RAM 2015 5500 DIESEL		$ 21,531	$ -
	MTP PLOW HITCH SYSTEM - TERRA STAR 2WD 2011+		$ 22,029	$ -
	MTP PLOW HITCH SYSTEM - TERRA STAR 4WD 2014+		$ 22,029	$ -
	MTP PLOW HITCH SYSTEM - CHEVY/GM		$ 21,531	$ -
	MTP PLOW HITCH SYSTEM - HINO 2013+		$ 21,732	$ -
	MTP PLOW HITCH OPTION - 12V HYDRAULIC PUMP PACK ILO FORCE HYDRAULICS. **(MUST SELECT WITH MTP HITCH OPTION ABOVE)**		$ (15,305)	$ -
	MTP PLOW HITCH OPTION - STAINLESS STEEL FORCE VT RESERVOIR UPGRADE ILO MILD) **(MUST SELECT WITH MTP HITCH OPTION ABOVE)**		$ 1,302	$ -

	HENDERSON TRUCK PORTION PLOW HITCH OPTIONS (not for use on MTP Hitch Options)	LIST PRICE	EXTENDED
	Lift cylinder, nitrided, 3" x 2" x 10" double acting, included with truck portion hitch	N/C	$ -
	Lift cylinder, nitrided, 4" x 2" x 10" double acting (STANDARD ON POWER TILT HITCHES)	$ 92	$ -
	C.U.P.-100 (Connect under pressure) 2 port Hitch Quick Disconnect	$ 653	$ -
	C.U.P.-100 (Connect under pressure) 4 - 6 port Hitch Quick Disconnect	$ 928	$ -

	INSTALLATION HYDRAULICS/ACCESSORIES OPTIONS:			LIST PRICE	EXTENDED
	TRANSMISSION MOUNT HOT SHIFT PTO(In Lieu of Front Mount-For Allison Automatic)			$ 1,453	$ -
	SPREADER CONTROL VALVE (IN CAB) WITH HOSE AND QUICK DISCONNECTS TO REAR			$ 1,817	$ -
	CERTIFIED POWER FREEDOM 2 SPREADER CONTROL (OPEN LOOP-INCLUDES VALVE,HOSE,QDS)			$ 3,669	$ -
	CERTIFIED POWER FREEDOM 2 SPREADER/PRE-WET CONTROL (-INCLUDES VALVE,HOSE,QDS)			$ 4,933	$ -
	CERTIFIED POWER XDS SPREADER/PRE-WET CONTROL (-INCLUDES VALVE,HOSE,QDS)			$ 8,149	$ -
	DICKEY-JOHN CONTROL POINT GRANULAR & LIQUID (INCLUDES SPREADER VALVE, HOSE, QDS)			$ 6,234	$ -
	DICKEY-JOHN CONTROL POINT PROGRAMMING KEYBOARD			$ 280	$ -
	AIR CONTROLS FOR STANDARD PLOW INSTALLATION (no wing system)			$ 1,268	$ -
	AIR CONTROLS FOR STANDARD PLOW & WING SYSTEM INSTALLATION			$ 2,381	$ -
	CERTIFIED POWER FREEDOM 2 ELECTRIC JOYSTICK FRONT PLOW/HOIST CONTROL (3 FUNCTIONS)			$ 12,405	$ -
	CERTIFIED POWER FREEDOM 2 ELECTRIC JOYSTICK ADD FOR 2 ADDITIONAL FUNCTIONS FOR WING			$ 1,570	$ -
	CERTIFIED POWER FREEDOM 2 ELECTRIC JOYSTICK ADD FOR 3 ADDITIONAL FUNCTIONS FOR WING			$ 1,944	$ -
	CERTIFIED POWER XDS ELECTRIC JOYSTICK FRONT PLOW/HOIST CONTROL (3 FUNCTIONS)			$ 15,635	$ -
	CERTIFIED POWER XDS ELECTRIC JOYSTICK ADD FOR 2 ADDITIONAL FUNCTIONS FOR WING			$ 2,202	$ -
	CERTIFIED POWER XDS ELECTRIC JOYSTICK ADD FOR 3 ADDITIONAL FUNCTIONS FOR WING			$ 2,491	$ -
	WING LIGHT (INCLUDES LIGHT, WIRING, AND INSTALLATION)	QTY	1	$ 178	$ -
	Spinner (Sander) Light installed on body (INCLUDES LIGHT, WIRING) (sold as each)	QTY	1	$ 285	$ -
	Roof Mounted PLOW LIGHTS (Includes Roof Mount Bar)-In addition to standard plow lights			$ 1,587	$ -
	Cone Basket, Large, For Pin or Quick Link Type Truck Hitch. (Truck Hitch Not included)			$ 8,863	$ -
	LED Backup Light Kit (Includes 1pr Obround LED Backup Lights, wiring, install)			$ 479	$ -

Customer Name	0
	0
Contact Ph.	0
PO #	0
Date	1/0/1900

SUBTOTAL (ALL HITCH CHOICE PICKS)	$ -	**(EA Unit)**
UNIT QUANTITY	0	
TOTAL (LIST)	$ -	

Effective December 2016

KNAPHEIDE INSTALLED BODY PRICE LISTS
PRICE LIST
Standard Installation

MUST SELECT ONE OF THE HENDERSON DUMP BODIES LISTED. THE PRICE INCLUDES THE HYDRAULICS AND INSTALLATION . THE FOLLOWING IS INCLUDED IN THE STANDARD INSTALLATION OF THE DUMP BODY:

- Installation and Paint of Dump Body (Paint is Deducted from the price if Stainless Steel is Selected)
- Valve / Hydraulic Reservoir for Operation of the Body (Load Sense Hydraulics)
- Cable Control / Lever / for Body Hoist Operation
- Dump Body LED Stop, Turn, Tail and Marker lights
- Includes hoses, fittings, back-up alarm, body-up light, rear mudflaps
- Includes freight and delivery

MARK E SINGLE AXLE DUMP BODY
PRICE LIST

FEATURES:

- Unibody design (No cross members, low mounting height).
- 8" I-Beam longitudinals on underbody hoist. (12' units with 8-21 underbody hoist have 10" I-beam longitudinals)
- 5" I-Beam longitudinals telescopic hoist.
- 4" structural channel subframe.
- Low mounting heights: 9" with telescopic hoist, 12" with 10' UB hoist, 15" with 12' UB hoist.
- 10 gauge sides and ends.
- One piece 3/16" HSLA steel floor.
- Smooth sides.
- 5 3/4" x 12" full depth rear corner post tied to rear apron.
- Manual double over center tailgate release mechanism.
- Tailgate has full perimeter boxing with sloped horizontal brace and top rail.
- Sloped, fully boxed, formed top rail
- 4" structural channel subframe with 6" x 4" x 3/8" structural angle rear hinge. (12' units with 8-21 underbody hoist have 5" structural channel subframe)
- 1 1/2" diameter 303 stainless steel rear hinge pins with greaseless composite bushings.
- All pivot points have greaseless composite bushings and 303 stainless steel pins.
- Telescopic trunnion mounted or underbody hoists.
- Light kit with one piece wiring harness for clearance lights and stop/turn/tail light in rear corner post.
- Body is chemically cleaned with a phosphate solution before being primed.
- Underside of body and subframe primed black.
- **1 year body warranty.** (2 year cylinder warranty on M Series Cylinders)

SELECT (X)	LENGTH (FT)	HEGHTS (INCHES) Sides	Head	Tailgate	CAPACITY (Cubic Yard) Sides/Ends	HOIST Type	Class (NTEA)	Capacity (Tons)	Approx. Weight	LIST PRICE	EXTENDED
	10	24"	48"	32"	5.2/6.8	TELE M90-4.5-3	50	18.6	3100	$ 20,017	$ -
	10	30"	48"	38"	6.5/8.1	TELE M90-4.5-3	50	18.6	3200	$ 20,408	$ -
	10	24"	36"	32"	5.2/6.8	UB-7-17	50	14.3	3100	$ 20,194	$ -
	10	30"	42"	38"	6.5/8.1	UB-8-17	50	18.6	3230	$ 21,076	$ -
	11	24"	48"	32"	5.7/7.4	TELE-M100-4.5-3	60	21.6	3335	$ 20,874	$ -
	11	30"	48"	38"	7.1/8.8	TELE-M100-4.5-3	60	21.4	3445	$ 21,265	$ -
	11	24"	36"	32"	5.7/7.4	UB-8-21	60	22.1	3335	$ 21,404	$ -
	11	30"	42"	38"	7.1/8.8	UB-8-21	60	24.4	3435	$ 21,933	$ -
	12	24"	50"	32"	6.2/8.2	TELE M110-4.5-3	60	17.5	3775	$ 21,164	$ -
	12	30"	50"	38"	7.7/9.7	TELE M110-4.5-3	60	17.3	3875	$ 21,688	$ -
	12	24"	36"	32"	6.2/8.2	UB-8-21	60	19.9	3775	$ 21,807	$ -
	12	30"	42"	38"	7.7/9.7	UB-8-21	60	19.3	3895	$ 22,331	$ -

	Hoist / Hydraulic Options:	LIST PRICE	EXTENDED
	Conventional U/B hoist w/ greaseable pivot points I.LO. greaseless composite bushings (7-17 or 8-17 UB hoist only)	$ (264)	$ -
	Full power down w/ telescopic hoist (CS Series)	$ 1,056	$ -
	Double acting hydraulics, underbody hoist	$ 504	$ -
	8" diameter underbody cylinder in lieu of 7" (ONLY APPLICABLE ON 10X24 UB BODY OPTION)	$ 498	$ -
	8/21 hoist class 60 I.L.O. of 7/17 hoist class 50 for 10' unit, 15" mounting height	$ 574	$ -

	Sides / Ends / Floor Options:	LIST PRICE	EXTENDED
	7 ga. grade 50 sides and ends in lieu of 10 ga. (10' unit)	$ 744	$ -
	7 ga. grade 50 sides and ends in lieu of 10 ga. (11' unit)	$ 769	$ -
	7 ga. grade 50 sides and ends in lieu of 10 ga. (12' unit)	$ 794	$ -
	3/16" AR400 floor in lieu of 3/16" HSLA (10' unit)	$ 523	$ -
	3/16" AR400 floor in lieu of 3/16" HSLA (11' unit)	$ 574	$ -
	3/16" AR400 floor in lieu of 3/16" HSLA (12' unit)	$ 624	$ -
	1/4" AR400 floor in lieu of 3/16" HSLA (10' unit)	$ 901	$ -
	1/4" AR400 floor in lieu of 3/16" HSLA (11' unit)	$ 990	$ -
	1/4" AR400 floor in lieu of 3/16" HSLA (12' unit)	$ 1,078	$ -

	One Piece Sloping Sides: (If applies, must select steel type and applicable body length below)				
	Applies to all standard headsheet and tailgate configurations				
	(Includes 1 top rail, 2 intermediate side braces, and 1 rub rail)			LIST PRICE	EXTENDED
	10 gauge carbon steel One Piece Sloping Sides (per foot of body)	Body Length		#VALUE!	$ -
	7 gauge carbon steel One Piece Sloping Sides (per foot of body)	Body Length		#VALUE!	$ -
	3/16 AR 400 steel One Piece Sloping Sides (per foot of body)	Body Length		#VALUE!	$ -

	201ss Sides/Ends upgrade *201 Stainless Steel Pricing Includes Deduction of Paint from Dump Body		
	201 Stainless Steel 10 Gauge Sides and Ends - 3/16" AR400 Floor ILO Standard: (Select option below)	LIST PRICE	EXTENDED

201 Stainless Steel 7 Gauge Sides and Ends - 3/16" AR400 Floor ILO Standard:

SIDE BRACE OPTIONS	LIST PRICE	EXTENDED
One intermediate per side horizontal steel side brace (MILD STEEL SIDE BODIES)	$ 298	$ -
One intermediate per side horizontal 201 stainless steel side brace (STAINLESS STEEL SIDE BODIES)	$ 582	$ -
One intermediate per side V Crimp Brace (24" side body only)	$ 149	$ -
Two intermediate per side V Crimp Brace (30" side body only)	$ 299	$ -

Tailgate Options:	LIST PRICE	EXTENDED
Air tailgate - pancake type (installed)	$ 498	$ -
6 panel tailgate bracing, carbon steel	$ 227	$ -
6 panel tailgate bracing, 201 stainless steel	$ 424	$ -
1 Extra horizontal tailgate brace, (two total) carbon steel	$ 183	$ -
1 Extra horizontal tailgate brace, (two total) 201 stainless steel	$ 371	$ -

HENDERSON BODY CABSHIELD, LADDER AND WALKRAIL OPTIONS			LIST PRICE	EXTENDED
Side ladder, carbon steel - installed			$ 599	$ -
Side ladder, stainless steel - installed			$ 1,116	$ -
3/4" re-rod tarp rail (installed both sides) (per foot of body)	BODY LENGTH		#VALUE!	$ -
3/4" stainless steel round tarp rail (installed both sides) (per foot of body)	BODY LENGTH		#VALUE!	$ -
1-1/2" grip strut walk rail (installed both sides) (per foot of body)	BODY LENGTH		#VALUE!	$ -
1-1/2" stainless steel grip strut walk rail (installed both sides) (per foot of body)	BODY LENGTH		#VALUE!	$ -
Sloped top rail with 1- 3/4" flat surface in lieu of standard		No Charge	No Charge	$ -
Vibrator mounting bracket, installed on passenger side front corner			$ 300	$ -

Cabshield Options:	LIST PRICE	EXTENDED
16" x 78" x 10 ga. Mild Steel	$ 394	$ -
22" x 78" x 10 ga. Mild Steel	$ 477	$ -
40" x 78" x 10 ga.Mild Steel	$ 621	$ -
16" x 86" x 10 ga. Mild Steel	$ 435	$ -
22" x 86" x 10 ga. Mild Steel	$ 496	$ -
40" x 86" x 10 ga. Mild Steel	$ 593	$ -
16" x 78" x 10 ga. 201 stainless steel	$ 1,061	$ -
22" x 78" x 10 ga. 201 stainless steel	$ 1,148	$ -
40" x 78" x 10 ga. 201 stainless steel	$ 1,294	$ -
16" x 86" x 10 ga. 201 stainless steel	$ 1,112	$ -
22" x 86" x 10 ga. 201 stainless steel	$ 1,203	$ -
40" x 86" x 10 ga. 201 stainless steel	$ 1,355	$ -

Dump Body Options			LIST PRICE	EXTENDED
12" Asphalt lip, weld-on, carbon steel only - Installed			$ 429	$ -
18" Asphalt lip, weld-on, carbon steel only - Installed			$ 593	$ -
12" Asphalt lip, bolt on, carbon steel only - Installed			$ 687	$ -
18" Asphalt lip, bolt on, carbon steel only - Installed			$ 763	$ -
Coal chute, carbon steel (installed) each (up to 3 can be installed in tailgate)	QTY	1	$ 718	$ -
Coal chute, 201 stainless steel (installed) each	QTY	1	$ 1,071	$ -

The following installation options/accessories may be added to any of the dump body prices

INSTALLATION OPTIONS (all items below are installed on truck prices):			LIST PRICE	EXTENDED
15 Ton Pintle Hitch, Dee Rings, 3/4" Pintle Plate			$ 791	$ -
20 Ton Pintle Hitch, Dee Rings, 3/4" Pintle Plate			$ 849	$ -
25 Ton Pintle Hitch, Dee Rings, 3/4" Pintle Plate			$ 890	$ -
7 Prong Trailer Plug (Installed in optional Pintle Plate)			$ 132	$ -
Wood Side Boards (Hard Wood) - Installed to fit in dump body board pockets			$ 593	$ -
Steel Mud Spill Shield in Front of Tires			$ 412	$ -
201 Stainless Steel Mud Spill Shield in Front of Tires			$ 593	$ -
Additional Set of Mudflaps in Front of Rear Tires			$ 165	$ -
Poly Fendors (positioned over rear tires) for Single Axle Trucks			$ 1,154	$ -
Poly Fendors (positioned over rear tires) for Tandem Axle Trucks			$ 1,483	$ -
(2) LED Amber Emergency Strobes (Whelen 5GA00FAR) Ovals Installed in Rear Cornerpost			$ 808	$ -
Roof Mounted / Cabshield Mounted Whelen R1LPPA Amber LED Light Bar			$ 753	$ -
4 LED Amber Emergency Strobes (Whelen 5GA00FAR) Installed in Cabshield (2 in front / 1 on each side)	QTY	1 Kit	$ 1,071	$ -
4 LED Amber Emergency Strobes (Whelen 5GA00FAR) Installed in Rear Bolster(2 in front / 1 on each side)			$ 1,071	$ -
Electric Tarp - Asphalt Rated Tarp			$ 3,543	$ -
Manual Tarp - Mesh Tarp			$ 956	$ -
Fabricated Steel Steps Inside Body	QTY	1	$ 297	$ -
Fabricated 304 Stainless Steel Steps Inside Body	QTY	1	$ 536	$ -
Spinner (Sander) Light installed on body (INCLUDES LIGHT, WIRING) (sold as each)	QTY	1	$ 178	$ -
Chipper Bar installed			$ 723	$ -
Shovel holder	QTY	1	$ 297	$ -
Full width flap in front of tandems			$ 466	$ -
Rear Cross conveyor/tailgate spreader brackets installed (Customer to provide brackets)			$ 95	$ -
On Spot Chain			$ 3,741	$ -
Steel Toolbox with Lock (18" x 18" x 24" - Frame Mount			$ 549	$ -
304 Stainless Steel Toolbox with Lock (18" x 18" x 24") - Frame Mount			$ 824	$ -
Central Grease-Lubrication Manifold (Munibody)			$ 545	$ -
Cradle Mount Steel Reservoir and Valve Enclosure (Front Mount Telescopic Hoist Only)			$ 3,268	$ -
Cradle Mount 304 Stainless Steel Reservoir and Valve Enclosure (Front Mount Telescopic Hoist Only)			$ 5,083	$ -

Customer Name	0
	0
Contact Ph.	0
PO #	0
Date	1/0/1900

SUBTOTAL (ALL MKE-SA CHOICE PICKS)	$ -	(EA Unit)
BODY QUANTITY	0	
TOTAL (LIST)	$ -	Total

Effective December 2016

KNAPHEIDE INSTALLED BODY PRICE LISTS
PRICE LIST
Standard Installation

MUST SELECT ONE OF THE HENDERSON DUMP BODIES LISTED. THE PRICE INCLUDES THE HYDRAULICS AND INSTALLATION . THE FOLLOWING IS INCLUDED IN THE STANDARD INSTALLATION OF THE DUMP BODY:

- **Installation and Paint of Dump Body (Paint is Deducted from the price if Stainless Steel is Selected)**
- **Valve / Hydraulic Reservoir for Operation of the Body (Load Sense Hydraulics)**
- **Cable Control / Lever / for Body Hoist Operation**
- **Dump Body LED Stop, Turn, Tail and Marker lights**
- **Includes hoses, fittings, back-up alarm, body-up light, rear mudflaps**
- **Includes freight and delivery**

MARK E "TI" TANDEM AXLE DUMP BODY
PRICE LIST

FEATURES:

- Unibody design (NO CROSS MEMBERS)
- 86" Inside width, 96" Outside Width.
- One piece 3/16" AR400 floor, 400 brinell hardness, approx. 190,000 psi tensile strength.
- 8" I-Beam longitudinals (NO SPLICES)
- One piece 10 gauge grade 50 sides, 65,000 PSI tensile, 50,000 PSI minimum yield strength.
- 10 gauge grade 50 headsheet.
- Seamless floor and side sheets are joined by a continuous welded 4" radius.
- 7 gauge grade 50 tailgate sheet, 65,000 PSI tensile strength, 50,000 PSI minimum yield strength.
- Flush-mount 1/2" flame cut tailgate pivots, 1" flame cut offset hinge plates.
- 7 gauge grade 50 full depth rear corner posts are tied to rear apron.
- Top rail, horizontal side brace, and rub rail slope outward for dirt-shedding.
- Trunnion mounted NITRIDED cylinder (NOT INVERTED)
- 6" x 8" x 1/2" structural angle rear hinge assembly with 2" diameter 303 stainless steel pins connected through 2 1/2" hinge blocks.
- Cylinder and rear hinge have greaseless composite bushings.
- Air tailgate release.
- Light kit and one piece wiring harness for rear clearance lights and stop/turn/tail in rear corner post.
- Entire body is chemically cleaned with a phosphate solution before being primed.
- Underside painted black.
- 2 year cylinder warranty/1 year body warranty

		HEGHTS (INCHES)			(Cubic Yard)	HOIST	Class	Capacity	Approx.		
SELECT (X)	LENGTH (FT)	Sides	Head	Tailgate	Sides/Ends	Type	(NTEA)	(Tons)	Weight	LIST PRICE	EXTENDED
	13	36"	58"	44"	10.0/12.3	M-120-5.5-3	80	29.4	4109	$ 26,050	$ -
	13	44"	58"	52"	12.3/14.6	M-120-5.5-3	80	29.4	4288	$ 26,548	$ -
	13	52"	66"	60"	14.6/16.9	M-120-5.5-3	80	29.4	4467	$ 27,348	$ -
	14	36"	58"	44"	10.8/13.3	M-130-5.5-3	90	26.8	4262	$ 26,491	$ -
	14	44"	58"	52"	13.3/15.7	M-130-5.5-3	90	26.8	4449	$ 26,989	$ -
	14	52"	66"	60"	15.8/18.2	M-130-5.5-3	90	26.8	4635	$ 27,878	$ -
	15	36"	58"	44"	11.6/14.2	M-140-5.5-3	90	26	4415	$ 27,203	$ -
	15	44"	58"	52"	14.2/16.8	M-140-5.5-3	90	26	4609	$ 27,802	$ -
	15	52"	66"	60"	16.8/19.4	M-140-5.5-3	90	26	4802	$ 28,817	$ -
	16	36"	58"	44"	12.4/15.2	M-150-6.5-4	110	35.4	4768	$ 28,533	$ -
	16	44"	58"	52"	15.2/18.0	M-150-6.5-4	110	35.4	4969	$ 29,145	$ -
	16	52"	66"	60"	18.0/20.8	M-150-6.5-4	110	35.4	5170	$ 30,160	$ -
	17	36"	58"	44"	13.2/16.1	M-160-6.5-4	110	31.3	4921	$ 29,290	$ -
	17	44"	58"	52"	16.1/19.1	M-160-6.5-4	110	31.3	5129	$ 29,977	$ -
	17	52"	66"	60"	19.1/22.1	M-160-6.5-4	110	31.3	5338	$ 31,048	$ -
	18	36"	58"	44"	13.9/17.1	M-170-6.5-4	110	28.8	5074	$ 30,210	$ -
	18	44"	58"	52"	17.1/20.2	M-170-6.5-4	110	28.8	5290	$ 30,727	$ -
	18	52"	66"	60"	20.2/23.3	M-170-6.5-4	110	28.8	5505	$ 31,817	$ -
	19	36"	58"	44"	14.8/18.1	M180-6.5-4	110	26.3	5227	$ 30,922	$ -
	19	44"	58"	52"	18.1/21.4	M180-6.5-4	110	26.3	5450	$ 31,439	$ -
	19	52"	66"	60"	21.4/24.7	M180-6.5-4	110	26.3	5672	$ 32,530	$ -
	20	36"	58"	44"	15.6/19.0	M180-6.5-4**	110**	25	5380	$ 31,704	$ -
	20	44"	58"	52"	19.0/22.5	M180-6.5-4**	110**	25	5610	$ 32,933	$ -
	20	52"	66"	60"	22.5/26.0	M180-6.5-4**	110**	25	5841	$ 33,311	$ -

	MKE Rear Body Profile Options:	LIST PRICE	EXTENDED
	Mark E Asphalt Body Style (Includes sloped tailgate)	$ 1,109	$ -

	Cylinder Options:	LIST PRICE	EXTENDED
	Mark E "ti" Option - Front Mount Cylinder (No Doghouse to make a TE Body Style) * includes extended cradle assembly with cradle mount hydraulic reservoir.	$ 964	$ -
	CS Series Cylinder (for tailgate spreader applications)	$ 464	$ -
	CS Series cylinder with full power down (up to 15')	$ 2,548	$ -

	Sideboard Options:		LIST PRICE	EXTENDED
	Sloped steel sideboards, carbon steel - 13' – 15' (installed)		$ 1,982	$ -
	Sloped steel sideboards, carbon steel - 16' – 20' (installed)		$ 2,184	$ -
	Sloped steel sideboards, 201 stainless steel - 13' - 15' (installed)		$ 3,001	$ -
	Sloped steel sideboards, 201 stainless steel - 16' - 20' (installed)		$ 3,279	$ -

	Side Brace Options (One Side Brace per Side is included on the Body):		LIST PRICE	EXTENDED
	Double horizontal side braces – adds one brace (carbon steel units)(not for option on 36"/44" sides & High Lift Combination)		$ 429	$ -
	Double horizontal side braces – adds one brace (201 stainless steel units)(not for option on 36"/44" sides & High Lift combination)		$ 1,017	$ -
	Triple horizontal side braces – adds two braces (carbon steel units)(not for option on 44"/52" sides & highlift combination)		$ 857	$ -
	Triple horizontal side braces – adds two braces (201 stainless steel units)(not for option on 44"/52" sides & highlift combination)		$ 2,035	$ -

	Side and Headsheet Options			
	7 gauge grade 50 sides and headsheet in lieu of 10 gauge		LIST PRICE	EXTENDED
	[redacted]			$ -
	[redacted]			$ -
	[redacted]			$ -
	3/16 SR400 sides and headsheet in lieu of 10 gauge			
	[redacted]			$ -
	[redacted]			$ -
	[redacted]			$ -
	* 201 Stainless Steel Pricing Includes Deduction of Paint from Dump Body			
	Mark E "ti" 201 Stainless Steel Sides & Ends / 3/16" AR400 Floor ILO Standard:			
	[redacted]			$ -
	[redacted]			$ -
	[redacted]			$ -

**201ss upgrade option will be STD 10ga. If 7ga 201ss Sides/Ends are desired, please also select 7ga grade 50 above.

	Mark E "ti" Floor and Tailgate Options:			LIST PRICE	EXTENDED
	¼" AR400 floor in lieu of 3/16" ar400 (per foot of body)	BODY LENGTH	FALSE	$ -	$ -
	3/16 AR400 tailgate I.L.O. 7 gauge			$ 366	$ -

	Rubber Mounting Pads (1/2" x 3" neoprene rubber molded to 3 1/2" x 1/8" steel backing.)	LIST PRICE	EXTENDED
	Rubber mounting pads - 13'-15' unit (10 - 3' sections) - Installed on Chassis Frame	$ 1,292	$ -
	Rubber mounting pads - 16'-17' unit (12 - 3' sections)- Installed on Chassis Frame	$ 1,541	$ -
	Rubber mounting pads - 18' unit (13 - 3' sections) - Installed on Chassis Frame	$ 1,699	$ -

	Tailgate Options:	LIST PRICE	EXTENDED
	9-panel tailgate, carbon steel (44" tailgate) **(for grade 50 or AR bodies only)**	$ 353	$ -
	12-panel tailgate, carbon steel (52" or 60" tailgate) **(for grade 50 or AR bodies only)**	$ 391	$ -
	9-panel tailgate, 201 Stainless steel units (44" tailgate) **(for stainless bodies with 44" gate)**	$ 635	$ -
	12-panel tailgate, 201 Stainless steel units (52" or 60" tailgate) **(for stainless bodies with 52" or 60" gate)**	$ 688	$ -
	1 Extra horizontal tailgate brace, carbon steel **(for grade 50 or AR bodies only)**	$ 183	$ -
	2 Extra horizontal tailgate braces, carbon steel **(for grade 50 or AR bodies only)**	$ 366	$ -
	1 Extra horizontal tailgate brace, (two total) 201 stainless steel **(for stainless steel bodies only)**	$ 378	$ -
	2 Extra horizontal tailgate brace, (three total) 201 stainless steel **(for stainless steel bodies only)**	$ 756	$ -
	21° Sloped tailgate (44" tailgate)	$ 660	$ -
	18° Sloped tailgate (52" tailgate)	$ 660	$ -
	High lift air tailgate (Air over air control)(flush gate, no board pockets and air cylinder, 3 1/4" X 1" X 8" in lieu of pancake style)	$ 3,272	$ -
	High lift air tailgate (Electric over air control)(flush gate, no board pockets and air cylinder, 3 1/4" X 1" X 8" in lieu of pancake style)	$ 3,625	$ -
	Air cylinder I.L.O. pancake style (do not select with highlift option)	$ 195	$ -

	HENDERSON BODY CABSHIELD, LADDER AND WALKRAIL OPTIONS			LIST PRICE	EXTENDED
	Side ladder, carbon steel - installed			$ 599	$ -
	Side ladder, stainless steel - installed			$ 1,116	$ -
	3/4" re-rod tarp rail (installed both sides) (per foot of body)	BODY LENGTH	FALSE	$ -	$ -
	3/4" stainless steel round tarp rail (installed both sides) (per foot of body)	BODY LENGTH	FALSE	$ -	$ -
	1-1/2" grip strut walk rail (installed both sides) (per foot of body)	BODY LENGTH	FALSE	$ -	$ -
	1-1/2" stainless steel grip strut walk rail (installed both sides) (per foot of body)	BODY LENGTH	FALSE	$ -	$ -
	Sloped top rail with 1- 3/4" flat surface in lieu of standard		**No Charge**	No Charge	$ -
	Vibrator mounting bracket, installed on passenger side front corner			$ 300	$ -

	Cabshield Options:	LIST PRICE	EXTENDED
	16" x 78" x 10 ga. Mild Steel	$ 394	$ -
	22" x 78" x 10 ga. Mild Steel	$ 477	$ -
	40" x 78" x 10 ga.Mild Steel	$ 621	$ -
	16" x 86" x 10 ga. Mild Steel	$ 435	$ -
	22" x 86" x 10 ga. Mild Steel	$ 496	$ -
	40" x 86" x 10 ga. Mild Steel	$ 593	$ -
	16" x 78" x 10 ga. 201 stainless steel	$ 1,061	$ -
	22" x 78" x 10 ga. 201 stainless steel	$ 1,148	$ -
	40" x 78" x 10 ga. 201 stainless steel	$ 1,294	$ -
	16" x 86" x 10 ga. 201 stainless steel	$ 1,112	$ -
	22" x 86" x 10 ga. 201 stainless steel	$ 1,203	$ -
	40" x 86" x 10 ga. 201 stainless steel	$ 1,355	$ -

	Dump Body Options	LIST PRICE	EXTENDED

	12” Asphalt lip, weld-on, carbon steel only - Installed			$	429	$ -
	18” Asphalt lip, weld-on, carbon steel only - Installed			$	593	$ -
	12” Asphalt lip, bolt on, carbon steel only - Installed			$	687	$ -
	18” Asphalt lip, bolt on, carbon steel only - Installed			$	763	$ -
	Coal chute, carbon steel (installed) each (up to 3 can be installed in tailgate)	**QTY**	1	$	718	$ -
	Coal chute, 201 stainless steel (installed) each	**QTY**	1	$	1,071	$ -

	The following installation options/accessories may be added to any of the dump body prices					
	INSTALLATION OPTIONS (all items below are installed on truck prices):				**LIST PRICE**	**EXTENDED**
	15 Ton Pintle Hitch, Dee Rings, 3/4" Pintle Plate			$	791	$ -
	20 Ton Pintle Hitch, Dee Rings, 3/4" Pintle Plate			$	849	$ -
	25 Ton Pintle Hitch, Dee Rings, 3/4" Pintle Plate			$	890	$ -
	7 Prong Trailer Plug (Installed in optional Pintle Plate)			$	132	$ -
	Wood Side Boards (Hard Wood) - Installed to fit in dump body board pockets			$	593	$ -
	Steel Mud Spill Shield in Front of Tires			$	412	$ -
	201 Stainless Steel Mud Spill Shield in Front of Tires			$	593	$ -
	Additional Set of Mudflaps in Front of Rear Tires			$	165	$ -
	Poly Fendors (positioned over rear tires) for Single Axle Trucks			$	1,154	$ -
	Poly Fendors (positioned over rear tires) for Tandem Axle Trucks			$	1,483	$ -
	(2) LED Amber Emergency Strobes (Whelen 5GA00FAR) Ovals Installed in Rear Cornerpost			$	808	$ -
	Roof Mounted / Cabshield Mounted Whelen R1LPPA Amber LED Light Bar			$	753	$ -
	4 LED Amber Emergency Strobes (Whelen 5GA00FAR) Installed in Cabshield (2 in front / 1 on each side)	QTY	1 Kit	$	1,071	$ -
	4 LED Amber Emergency Strobes (Whelen 5GA00FAR) Installed in Rear Bolster(2 in front / 1 on each side)			$	1,071	$ -
	Electric Tarp - Asphalt Rated Tarp			$	3,543	$ -
	Manual Tarp - Mesh Tarp			$	956	$ -
	Fabricated Steel Steps Inside Body	**QTY**	1	$	297	$ -
	Fabricated 304 Stainless Steel Steps Inside Body	**QTY**	1	$	536	$ -
	Spinner (Sander) Light installed on body (INCLUDES LIGHT, WIRING)	**QTY**	1	$	178	$ -
	Chipper Bar installed			$	723	$ -
	Shovel holder	**QTY**	1	$	297	$ -
	Full width flap in front of tandems			$	466	$ -
	Rear Cross conveyor/tailgate spreader brackets installed (Customer to provide brackets)			$	95	$ -
	On Spot Chain			$	3,741	$ -
	Steel Toolbox with Lock (18" x 18" x 24" - Frame Mount			$	549	$ -
	304 Stainless Steel Toolbox with Lock (18" x 18" x 24") - Frame Mount			$	824	$ -
	Central Grease-Lubrication Manifold (Munibody)			$	545	$ -
	Cradle Mount Steel Reservoir and Valve Enclosure (Front Mount Telescopic Hoist Only)			$	3,268	$ -
	Cradle Mount 304 Stainless Steel Reservoir and Valve Enclosure (Front Mount Telescopic Hoist Only)			$	5,083	$ -

Customer Name	0
	0
Contact Ph.	0
PO #	0
Date	1/0/1900

SUBTOTAL (ALL MKE-TI CHOICE PICKS)	$ -	**(EA Unit)**
BODY QUANTITY	0	
TOTAL (LIST)	$ -	**Total**

Effective December 2016

KNAPHEIDE INSTALLED BODY PRICE LISTS
PRICE LIST
Standard Installation

MUST SELECT ONE OF THE HENDERSON DUMP BODIES LISTED. THE PRICE INCLUDES THE HYDRAULICS AND INSTALLATION . THE FOLLOWING IS INCLUDED IN THE STANDARD INSTALLATION OF THE DUMP BODY:

- **Installation and Paint of Dump Body (Paint is Deducted from the price if Stainless Steel is Selected)**
- **Valve / Hydraulic Reservoir for Operation of the Body (Load Sense Hydraulics)**
- **Cable Control / Lever / for Body Hoist Operation**
- **Dump Body LED Stop, Turn, Tail and Marker lights**
- **Includes hoses, fittings, back-up alarm, body-up light, rear mudflaps**
- **Includes freight and delivery**

MARK E "TC" TANDEM AXLE DUMP BODY
PRICE LIST

FEATURES:

- Unibody design (NO CROSS MEMBERS)
- 86" Inside width, 96" Outside Width.
- One piece 3/16" grade 50 floor, 65,000 PSI tensile strength, 50,000 PSI minimum yield strength.
- 8" I-Beam longitudinals (NO SPLICES)
- One piece 10 gauge grade 50 sides, 65,000 PSI tensile, 50,000 PSI yield strength.
- 10 gauge grade 50 headsheet.
- Seamless floor and side sheets are joined by a continuous welded 4" radius.
- 10 gauge grade 50 tailgate sheet, 65,000 PSI tensile strength, 50,000 PSI yield strength.
- Flush-mount 1/2" flame cut tailgate pivots, 1" flame cut offset hinge plates.
- 7 gauge grade 50 full depth rear corner posts are tied to rear apron.
- Top rail, horizontal side brace, and rub rail sloped outward for dirt shedding.
- T-G-P conventional telescopic cylinder.
- 6" x 8" x 1/2" structural angle rear hinge assembly with 2" diameter pins connected through 2 1/2" greaseable hinge blocks.
- Air tailgate release.
- Light kit and one piece wiring harness for rear clearance lights and stop/turn/tail in rear corner post.
- Entire body is chemically cleaned with a phosphate solution before being primed.
- Underside painted black.
- 1 year cylinder warranty/1 year body warranty

		HEGHTS (INCHES)			(Cubic Yard)	HOIST	Class	Capacity	Approx.		
SELECT (X)	LENGTH (FT)	Sides	Head	Tailgate	Sides/Ends	Type	(NTEA)	(Tons)	Weight	LIST PRICE	EXTENDED
	13	36"	58"	44"	9.9/12.2	T-63-120	90	34.3	4033	$ 23,623	$ -
	13	44"	58"	52"	12.2/14.5	T-63-120	90	34.3	4203	$ 24,114	$ -
	13	52"	66"	60"	14.5/16.8	T-63-120	90	34.3	4410	$ 25,003	$ -
	14	36"	58"	44"	10.7/13.1	T-63-130	100	33.2	4208	$ 24,064	$ -
	14	44"	58"	52"	13.1/15.5	T-63-130	100	33.2	4378	$ 24,549	$ -
	14	52"	66"	60"	15.6/18.0	T-63-130	100	33.2	4583	$ 25,444	$ -
	15	36"	58"	44"	11.5/14.1	T-63-130	100	30.9	4383	$ 24,688	$ -
	15	44"	58"	52"	14.1/16.6	T-63-130	100	30.9	4608	$ 25,325	$ -
	15	52"	66"	60"	16.7/19.2	T-63-130	100	30.9	4858	$ 26,340	$ -
	16	36"	58"	44"	12.2/15.0	T-74-140	110	32.8	4759	$ 25,482	$ -
	16	44"	58"	52"	15.0/17.8	T-74-140	110	32.8	5039	$ 26,119	$ -
	16	52"	66"	60"	17.8/20.6	T-74-140	110	32.8	5344	$ 27,134	$ -
	17	36"	58"	44"	13.0/15.9	T-74-156	110	33.1	4979	$ 26,295	$ -
	17	44"	58"	52"	16.0/18.9	T-74-156	110	33.1	5309	$ 26,976	$ -
	17	52"	66"	60"	18.9/21.9	T-74-156	110	33.1	5664	$ 28,048	$ -
	18	36"	58"	44"	13.8/16.9	T-74-156*	120 *	31	5159	$ 27,090	$ -
	18	44"	58"	52"	16.9/20.0	T-74-156*	120 *	31	5539	$ 27,815	$ -
	18	52"	66"	60"	20.0/23.1	T-74-156*	120 *	31	5944	$ 29,038	$ -
	19	36"	58"	44"	14.7/18.0	T-74-167	120	32	5297	$ 27,802	$ -
	19	44"	58"	52"	18.0/21.3	T-74-167	120	32	5713	$ 28,527	$ -
	19	52"	66"	60"	21.3/24.7	T-74-167	120	32	6149	$ 29,750	$ -
	20	36"	58"	44"	15.5/19.0	T-74-167**	120**	30.8	5430	$ 28,584	$ -
	20	44"	58"	52"	19.0/22.4	T-74-167**	120**	30.8	5884	$ 29,309	$ -
	20	52"	66"	60"	22.4/26.0	T-74-167**	120**	30.8	6339	$ 30,531	$ -

	MKE Rear Body Profile Options:	LIST PRICE	EXTENDED
	Mark E Asphalt Body Style (Includes sloped tailgate) (Includes sloped tailgate)	$ 1,109	$ -

	Cylinder Options:	LIST PRICE	EXTENDED
	Mark E "tc" Option Sloped Front Sheet (to make a TS Body Syle)	$ 396	$ -

	Sideboard Options:	LIST PRICE	EXTENDED
	Sloped steel sideboards, carbon steel - 13' – 15' (installed)	$ 1,982	$ -

	Sloped steel sideboards, carbon steel - 16' – 20' (installed)		$ 2,184	$ -
	Sloped steel sideboards, 201 stainless steel - 13' - 15' (installed)		$ 3,001	$ -
	Sloped steel sideboards, 201 stainless steel - 16' - 20' (installed)		$ 3,280	$ -

	Side Brace Options (One Side Brace per Side is included on the Body):		**LIST PRICE**	**EXTENDED**
	Double horizontal side braces – adds one brace (carbon steel units)(not for option on 36"/44" sides & High Lift Combination)		$ 429	$ -
	Double horizontal side braces – adds one brace (201 stainless steel units)(not for option on 36"/44" sides & High Lift combination)		$ 1,017	$ -
	Triple horizontal side braces – adds two braces (carbon steel units)(not for option on 44"/52" sides & highlift combination)		$ 857	$ -
	Triple horizontal side braces – adds two braces (201 stainless steel units)(not for option on 44"/52" sides & highlift combination)		$ 2,035	$ -

	Side and Headsheet Options			
	7 gauge grade 50 sides and headsheet in lieu of 10 gauge		**LIST PRICE**	**EXTENDED**
[redacted]				$ -
				$ -
				$ -
	3/16 SR400 sides and headsheet in lieu of 10 gauge			
[redacted]				$ -
				$ -
				$ -
	*** 201 Stainless Steel Pricing Includes Deduction of Paint from Dump Body**			
	Mark E "tc" 201 Stainless Steel Sides & Ends / 3/16" AR400 Floor ILO Standard:			
[redacted]	**			$ -
	**			$ -
	**			$ -

**201ss upgrade option will be STD 10ga. If 7ga 201ss Sides/Ends are desired, please also select 7ga grade 50 above.

	Mark E "tc" Floor and Tailgate Options:			**LIST PRICE**	**EXTENDED**
	3/16" AR400 floor in lieu of 3/16" grade 50 (per foot of body)	**BODY LENGTH**	FALSE	$ -	$ -
	¼" AR400 floor in lieu of 3/16" grade 50 (per foot of body)	**BODY LENGTH**	FALSE	$ -	$ -
	7 gauge grade 50 tailgate sheet I.L.O. 10 gauge			$ 195	$ -
	3/16 AR400 tailgate I.L.O. 10 gauge			$ 561	$ -

	Rubber Mounting Pads (1/2" x 3" neoprene rubber molded to 3 1/2" x 1/8" steel backing.)	**LIST PRICE**	**EXTENDED**
	Rubber mounting pads - 13'-15' unit (10 - 3' sections) - Installed on Chassis Frame	$ 1,292	$ -
	Rubber mounting pads - 16'-17' unit (12 - 3' sections)- Installed on Chassis Frame	$ 1,541	$ -
	Rubber mounting pads - 18' unit (13 - 3' sections) - Installed on Chassis Frame	$ 1,699	$ -

	Tailgate Options:	**LIST PRICE**	**EXTENDED**
	9-panel tailgate, carbon steel (44" tailgate) **(for grade 50 or AR bodies only)**	$ 353	$ -
	12-panel tailgate, carbon steel (52" or 60" tailgate) **(for grade 50 or AR bodies only)**	$ 391	$ -
	9-panel tailgate, 201 Stainless steel units (44" tailgate) **(for stainless bodies with 44" gate)**	$ 635	$ -
	12-panel tailgate, 201 Stainless steel units (52" or 60" tailgate) **(for stainless bodies with 52" or 60" gate)**	$ 688	$ -
	1 Extra horizontal tailgate brace, carbon steel **(for grade 50 or AR bodies only)**	$ 183	$ -
	2 Extra horizontal tailgate braces, carbon steel **(for grade 50 or AR bodies only)**	$ 366	$ -
	1 Extra horizontal tailgate brace, (two total) 201 stainless steel **(for stainless steel bodies only)**	$ 378	$ -
	2 Extra horizontal tailgate brace, (three total) 201 stainless steel **(for stainless steel bodies only)**	$ 756	$ -
	21° Sloped tailgate (44" tailgate)	$ 660	$ -
	18° Sloped tailgate (52" tailgate)	$ 660	$ -
	High lift air tailgate (Air over air control)(flush gate, no board pockets and air cylinder, 3 1/4" X 1" X 8" in lieu of pancake style)	$ 3,272	$ -
	High lift air tailgate (Electric over air control)(flush gate, no board pockets and air cylinder, 3 1/4" X 1" X 8" in lieu of pancake style)	$ 3,625	$ -
	Air cylinder I.L.O. pancake style (do not select with highlift option)	$ 195	$ -

	Mark E "tc" Option:	**LIST PRICE**	**EXTENDED**
	Rear hinge assembly with greaseless bushings and 303 stainless steel pins in lieu of standard	$ 183	$ -

	HENDERSON BODY CABSHIELD, LADDER AND WALKRAIL OPTIONS			**LIST PRICE**	**EXTENDED**
	Side ladder, carbon steel - installed			$ 599	$ -
	Side ladder, stainless steel - installed			$ 1,116	$ -
	3/4" re-rod tarp rail (installed both sides) (per foot of body)	**BODY LENGTH**	FALSE	$ -	$ -
	3/4" stainless steel round tarp rail (installed both sides) (per foot of body)	**BODY LENGTH**	FALSE	$ -	$ -
	1-1/2" grip strut walk rail (installed both sides) (per foot of body)	**BODY LENGTH**	FALSE	$ -	$ -
	1-1/2" stainless steel grip strut walk rail (installed both sides) (per foot of body)	**BODY LENGTH**	FALSE	$ -	$ -
	Sloped top rail with 1- 3/4" flat surface in lieu of standard		**No Charge**	No Charge	$ -
	Vibrator mounting bracket, installed on passenger side front corner			$ 300	$ -

	Cabshield Options:	**LIST PRICE**	**EXTENDED**
	16" x 78" x 10 ga. Mild Steel	$ 394	$ -
	22" x 78" x 10 ga. Mild Steel	$ 477	$ -
	40" x 78" x 10 ga.Mild Steel	$ 621	$ -
	16" x 86" x 10 ga. Mild Steel	$ 435	$ -
	22" x 86" x 10 ga. Mild Steel	$ 496	$ -
	40" x 86" x 10 ga. Mild Steel	$ 593	$ -
	16" x 78" x 10 ga. 201 stainless steel	$ 1,061	$ -
	22" x 78" x 10 ga. 201 stainless steel	$ 1,148	$ -
	40" x 78" x 10 ga. 201 stainless steel	$ 1,294	$ -
	16" x 86" x 10 ga. 201 stainless steel	$ 1,112	$ -
	22" x 86" x 10 ga. 201 stainless steel	$ 1,203	$ -
	40" x 86" x 10 ga. 201 stainless steel	$ 1,355	$ -

	ADDITIONAL OPTIONS)			LIST PRICE	EXTENDED
	12” Asphalt lip, weld-on, carbon steel only - Installed			$ 429	$ -
	18” Asphalt lip, weld-on, carbon steel only - Installed			$ 593	$ -
	12” Asphalt lip, bolt on, carbon steel only - Installed			$ 687	$ -
	18” Asphalt lip, bolt on, carbon steel only - Installed			$ 763	$ -
	Coal chute, carbon steel (installed) each (up to 3 can be installed in tailgate)	QTY	1	$ 718	$ -
	Coal chute, 201 stainless steel (installed) each	QTY	1	$ 1,071	$ -

The following installation options/accessories may be added to any of the dump body prices

	INSTALLATION OPTIONS (all items below are installed on truck prices):			LIST PRICE	EXTENDED
	15 Ton Pintle Hitch, Dee Rings, 3/4" Pintle Plate			$ 791	$ -
	20 Ton Pintle Hitch, Dee Rings, 3/4" Pintle Plate			$ 849	$ -
	25 Ton Pintle Hitch, Dee Rings, 3/4" Pintle Plate			$ 890	$ -
	7 Prong Trailer Plug (Installed in optional Pintle Plate)			$ 132	$ -
	Wood Side Boards (Hard Wood) - Installed to fit in dump body board pockets			$ 593	$ -
	Steel Mud Spill Shield in Front of Tires			$ 412	$ -
	201 Stainless Steel Mud Spill Shield in Front of Tires			$ 593	$ -
	Additional Set of Mudflaps in Front of Rear Tires			$ 165	$ -
	Poly Fendors (positioned over rear tires) for Single Axle Trucks			$ 1,154	$ -
	Poly Fendors (positioned over rear tires) for Tandem Axle Trucks			$ 1,483	$ -
	(2) LED Amber Emergency Strobes (Whelen 5GA00FAR) Ovals Installed in Rear Cornerpost			$ 808	$ -
	Roof Mounted / Cabshield Mounted Whelen R1LPPA Amber LED Light Bar			$ 753	$ -
	4 LED Amber Emergency Strobes (Whelen 5GA00FAR) Installed in Cabshield (2 in front / 1 on each side)	QTY	1 Kit	$ 1,071	$ -
	4 LED Amber Emergency Strobes (Whelen 5GA00FAR) Installed in Rear Bolster(2 in front / 1 on each side)			$ 1,071	$ -
	Electric Tarp - Asphalt Rated Tarp			$ 3,543	$ -
	Manual Tarp - Mesh Tarp			$ 956	$ -
	Fabricated Steel Steps Inside Body	QTY	1	$ 297	$ -
	Fabricated 304 Stainless Steel Steps Inside Body	QTY	1	$ 536	$ -
	Spinner (Sander) Light installed on body (INCLUDES LIGHT, WIRING)	QTY	1	$ 178	$ -
	Chipper Bar installed			$ 723	$ -
	Shovel holder	QTY	1	$ 297	$ -
	Full width flap in front of tandems			$ 466	$ -
	Rear Cross conveyor/tailgate spreader brackets installed (Customer to provide brackets)			$ 95	$ -
	On Spot Chain			$ 3,741	$ -
	Steel Toolbox with Lock (18" x 18" x 24" - Frame Mount			$ 549	$ -
	304 Stainless Steel Toolbox with Lock (18" x 18" x 24") - Frame Mount			$ 824	$ -
	Central Grease-Lubrication Manifold (Munibody)			$ 545	$ -
	Cradle Mount Steel Reservoir and Valve Enclosure (Front Mount Telescopic Hoist Only)			$ 3,268	$ -
	Cradle Mount 304 Stainless Steel Reservoir and Valve Enclosure (Front Mount Telescopic Hoist Only)			$ 5,083	$ -

Customer Name	0
	0
Contact Ph.	0
PO #	0
Date	1/0/1900

SUBTOTAL (ALL MKE-TC CHOICE PICKS)	$ -	**(EA Unit)**
BODY QUANTITY	0	
TOTAL (LIST)	$ -	**Total**

Effective December 2016

KNAPHEIDE INSTALLED BODY PRICE LISTS
PRICE LIST
Standard Installation

MUST SELECT ONE OF THE HENDERSON DUMP BODIES LISTED. THE PRICE INCLUDES THE HYDRAULICS AND INSTALLATION . THE FOLLOWING IS INCLUDED IN THE STANDARD INSTALLATION OF THE DUMP BODY:

- **Installation and Paint of Dump Body (Paint is Deducted from the price if Stainless Steel is Selected)**
- **Valve / Hydraulic Reservoir for Operation of the Body (Load Sense Hydraulics)**
- **Cable Control / Lever / for Body Hoist Operation**
- **Dump Body LED Stop, Turn, Tail and Marker lights**
- **Includes hoses, fittings, back-up alarm, body-up light, rear mudflaps**
- **Includes freight and delivery**

MUNIBODY II COMBINATION DUMP BODY/SPREADER
PRICE LIST (SINGLE AND TANDEM AXLE TRUCKS)

FEATURES:

- Low mounting height-10" from truck frame to conveyor floor.
- 95" inside width for maximum capacity.
- 7 ga. grade 50 sides and ends 65,000 PSI tensile/50,000 PSI minimum yield strength.
- 409 stainless steel formed longitudinals, 7 gauge inner/10 gauge outer.
- 28" wide main conveyor .
- One piece 1/4" AR400 steel conveyor floor.
- 2" diameter drive and idler shafts with 8 tooth machined sprockets.
- Conveyor extends beyond tailgate to allow vertical feed gate.
- Feed gate is 8 position quick-pin adjustable for positive control.
- Dual pancake type air tailgate latch with dual over-center linkage.
- Trunnion mount nitrided telescopic hoist cylinder. **(not inverted)**
- Full length fenders (approx. 2' shorter than length of body)
- Hydraulic tubing and hoses plumbed to rear of unit (front and rear discharge units only).
- One spinner chute assembly w/ 20" spinner included (front spinner on front/rear discharge units).
- 8" X 6" X1/2" structural angle rear hinge assembly with 2" diameter 303 stainless steel pins through 2-1/2" hinge blocks.
- Cylinder mounts and rear hinge blocks have greaseless composite bushings.
- Light kit and one piece wiring harness for stop/turn/tail and rear clearance lights.
- Primed with a high quality 2-component primer.
- 2 year cylinder warranty/1 year body warranty.

REAR DISCHARGE ONLY or FRONT CENTER DISCHARGE ONLY PRICING

Rear Discharge Only:

- Heavy duty pintle chain bar flight conveyor
- 25:1 planetary gear case and piston motor driving rear conveyor shaft

Front Center Discharge Only:

- **Does not include**:
- Rear feed gate
- Cross Conveyor

SELECT (X)	LENGTH (FT)	Doghouse Type	HEGHTS (INCHES) Sides	Head	Tailgate	(Cubic Yard) Sides/Ends	Truck Chassis (clear)	HOIST Type	Class (NTEA)	LIST PRICE	EXTENDED
	9'/10'	External	36"	54"	48"	6.2/8.8	84" C/A	CS90-4-3	40	$ 36,712	$ -
	10'	Internal	36"	60"	48"	6.9/9.8	84"C/A	CS90-4-3	40	$ 36,466	$ -
	10'/11'	External	36"	54"	48"	6.8/9.8	96" C/A	CS90-4-3	*40	$ 38,092	$ -
	11'	Internal	36"	60"	48"	7.6/10.8	96" C/A	CS90-4-3	*40	$ 37,840	$ -
	11'/12'	External	36"	54"	48"	7.6/10.8	108" C/A	CS110-5-3	70	$ 39,485	$ -
	12'	Internal	36"	60"	48"	8.3/11.8	108" C/A	CS110-5-3	70	$ 39,233	$ -
	12'/13'	External	36"	54"	48"	8.4/11.8	108" C/T	CS110-5-3	*70	$ 40,866	$ -
	13'	Internal	36"	60"	48"	9.1/12.8	108" C/T	CS110-5-3	*70	$ 40,614	$ -
	13'/14'	External	36"	54"	48"	9.1/12.8	120" C/T	CS130-6-3	100	$ 42,215	$ -
	14'	Internal	36"	60"	48"	9.8/13.8	120" C/T	CS130-6-3	100	$ 41,969	$ -
	14'/15'	External	36"	54"	48"	9.8/13.8	132" C/T	CS130-6-3	*100	$ 43,595	$ -
	15'	Internal	36"	60"	48"	10.5/14.8	132" C/T	CS130-6-3	*100	$ 43,349	$ -
	15'/16'	External	36"	54"	48"	10.5/14.8	144" C/T	CS150-6-4	80	$ 44,976	$ -
	16'	Internal	36"	60"	48"	11.2/15.8	144" C/T	CS150-6-4	80	$ 44,736	$ -
	16'/17'	External	36"	54"	48"	11.3/15.8	156" C/T	CS150-6-4	*80	$ 46,356	$ -

* NTEA dump angle is 50°, Munibody overall lengths of 11', 13', 15' and 17' are 47.5°.

Specify Rear Discharge Only or Front Center Discharge Only (select N/A if choosing alternate discharge from Discharge options below)

Rear Discharge Only (click on Orange cell to activate drop down)

	HENDERSON MUNIBODY II SIDE SLOPE AND DISCHARGE OPTIONS	LIST PRICE	EXTENDED
	35 degree slope in lieu of standard 22 degree slope. (reduces body capacity approx 1 cu.yd)	No Charge	$ -
	[redacted]		$ -
	[redacted]		$ -
	[redacted]		$ -
	[redacted]		$ -
	[redacted]		$ -

** Hoist model/capacities shown in chart do not apply to this option

	201 Stainless Steel Option (price includes deduct for paint of body)	LIST PRICE	EXTENDED

	*** 201 Stainless steel option includes sides, headsheet, tailgate, all perimeter bracing, corner posts rear, apron, longsills, external tailgate latch and pivot hardware.**				
	201ss body upgrade	**BODY LENGTH**	FALSE	$ -	$ -

	MISC Munibody II Options	**LIST PRICE**	**EXTENDED**
	Conveyor Motor with Integral Speed Sensor	$ 605	$ -
	Conveyor Chain Oiling System	$ 258	$ -
	Stainless Steel Underbody Pans (recommended to prevent material from falling on chassis frame)	$ 651	$ -

	Spinner & Chute Options:	**LIST PRICE**	**EXTENDED**
	Polyurethane Spinner disc	$ 189	$ -
	Rear asphalt pathcing pan with chute and mount, mild steel (for front/rear discharge units)	$ 662	$ -
	Rear aspahlt patching pan, mild steel (for rear discharge units only, mounts to existing spinner frame)	$ 208	$ -
	Rear spinner assembly with chute and mount (front/rear discharge units only) (rear spinner kit if unit is chosen with front spinner kit as STD)	$ 1,236	$ -
	Chute and mount only for rear spreading (front/rear discharge units only) (rear frame kit minus spinner kit)	$ 523	$ -
	Combo kit, complete rear spinner kit assembly with asphalt patching pan (includes chute and mounts)	$ 1,967	$ -
	Front berm chute for right hand discharge, mild steel (front/rear discharge units only)	$ 164	$ -
	Rear berm chute (mild steel)	$ 492	$ -
	Rear berm chute, (201 stainless steel)	$ 1,483	$ -

	Munibody II Options			**LIST PRICE**	**EXTENDED**
	Standard Duty Top Grate Screen Kit, Installed (3/8" rod x 3/8" rod)	**BODY LENGTH**	FALSE	$ -	$ -
	Heavy Duty Top Grate Screen Kit, Installed (3/8" rod thru 1/4" x 2" flat)	**BODY LENGTH**	FALSE	$ -	$ -
	Sloped Steel Sideboards				
	Mild Steel Sloped Steel Sideboards	**BODY LENGTH**	FALSE	$ -	$ -
	304 stainless steel Sloped Sideboards	**BODY LENGTH**	FALSE	$ -	$ -

	Conveyor Upgrades			**LIST PRICE**	**EXTENDED**
	Dual 7" Augers (Rear discharge units only OR Front discharge only) (top grate screens included in price) *not available with cross conveyor option	**BODY LENGTH**	FALSE	$ -	$ -
	Rubber Belt over chain conveyor	**BODY LENGTH**	FALSE	$ -	$ -
	Double conveyor cross bars (cross bar on every link)	**BODY LENGTH**	FALSE	$ -	$ -
	3/16" AR400 conveyor floor cover (common upgrade)	**BODY LENGTH**	FALSE	$ -	$ -

	Fender Mounted Tool Box Options:			**LIST PRICE**	**EXTENDED**
	· 9' -12' bodies will have a 66" bolt-on tool box in fender				
	· 13' and longer bodies will have a 96" bolt-on tool box in fender				
	Mild steel tool box (both sides)	**BODY LENGTH**	FALSE	$ -	$ -
	201 stainless steel tool box (both sides)	**BODY LENGTH**	FALSE	$ -	$ -
	Mild steel tool box, driver side or passenger side only	**BODY LENGTH**	FALSE	$ -	$ -
	201 stainless steel tool box, driver side or passenger side only	**BODY LENGTH**	FALSE	$ -	$ -

***MUNIBODY II Prewet tank options located on Prewet Tab**

	HENDERSON BODY CABSHIELD, LADDER AND WALKRAIL OPTIONS	**LIST PRICE**	**EXTENDED**
	Side ladder, carbon steel - installed	$ 599	$ -
	Side ladder, stainless steel - installed	$ 1,116	$ -
	Vibrator mounting bracket, installed on passenger side front corner	$ 300	$ -

	Cabshield Options:	**LIST PRICE**	**EXTENDED**
	16" x 78" x 10 ga. Mild Steel	$ 394	$ -
	22" x 78" x 10 ga. Mild Steel	$ 477	$ -
	40" x 78" x 10 ga.Mild Steel	$ 621	$ -
	16" x 86" x 10 ga. Mild Steel	$ 435	$ -
	22" x 86" x 10 ga. Mild Steel	$ 496	$ -
	40" x 86" x 10 ga. Mild Steel	$ 593	$ -
	16" x 78" x 10 ga. 201 stainless steel	$ 1,061	$ -
	22" x 78" x 10 ga. 201 stainless steel	$ 1,148	$ -
	40" x 78" x 10 ga. 201 stainless steel	$ 1,294	$ -
	16" x 86" x 10 ga. 201 stainless steel	$ 1,112	$ -
	22" x 86" x 10 ga. 201 stainless steel	$ 1,203	$ -
	40" x 86" x 10 ga. 201 stainless steel	$ 1,355	$ -

	The following installation options/accessories may be added to any of the dump body prices,				
	INSTALLATION OPTIONS (all items below are installed on truck prices):			**LIST PRICE**	**EXTENDED**
	15 Ton Pintle Hitch, Dee Rings, 3/4" Pintle Plate			$ 791	$ -
	20 Ton Pintle Hitch, Dee Rings, 3/4" Pintle Plate			$ 849	$ -
	25 Ton Pintle Hitch, Dee Rings, 3/4" Pintle Plate			$ 890	$ -
	7 Prong Trailer Plug (Installed in optional Pintle Plate)			$ 132	$ -
	Wood Side Boards (Hard Wood) - Installed to fit in dump body board pockets			$ 593	$ -
	Steel Mud Spill Shield in Front of Tires			$ 412	$ -
	201 Stainless Steel Mud Spill Shield in Front of Tires			$ 593	$ -
	Additional Set of Mudflaps in Front of Rear Tires			$ 165	$ -
	Poly Fendors (positioned over rear tires) for Single Axle Trucks			$ 1,154	$ -
	Poly Fendors (positioned over rear tires) for Tandem Axle Trucks			$ 1,483	$ -
	(2) LED Amber Emergency Strobes (Whelen 5GA00FAR) Ovals Installed in Rear Cornerpost			$ 808	$ -
	Roof Mounted / Cabshield Mounted Whelen R1LPPA Amber LED Light Bar			$ 753	$ -
	4 LED Amber Emergency Strobes (Whelen 5GA00FAR) Installed in Cabshield (2 in front / 1 on each side)	**QTY**	1 Kit	$ 1,071	$ -
	4 LED Amber Emergency Strobes (Whelen 5GA00FAR) Installed in Rear Bolster(2 in front / 1 on each side)			$ 1,071	$ -
	Electric Tarp - Asphalt Rated Tarp			$ 3,543	$ -
	Manual Tarp - Mesh Tarp			$ 956	$ -
	Fabricated Steel Steps Inside Body	**QTY**	1	$ 297	$ -
	Fabricated 304 Stainless Steel Steps Inside Body	**QTY**	1	$ 536	$ -
	Spinner (Sander) Light installed on body (INCLUDES LIGHT, WIRING)	**QTY**	1	$ 178	$ -
	Chipper Bar installed			$ 723	$ -
	Shovel holder	**QTY**	1	$ 297	$ -
	Full width flap in front of tandems			$ 466	$ -

	Rear Cross conveyor/tailgate spreader brackets installed (Customer to provide brackets)	$	95	$	-
	On Spot Chain	$	3,741	$	-
	Steel Toolbox with Lock (18" x 18" x 24" - Frame Mount	$	549	$	-
	304 Stainless Steel Toolbox with Lock (18" x 18" x 24") - Frame Mount	$	824	$	-
	Central Grease-Lubrication Manifold (Munibody)	$	545	$	-
	Cradle Mount Steel Reservoir and Valve Enclosure (Front Mount Telescopic Hoist Only)	$	3,268	$	-
	Cradle Mount 304 Stainless Steel Reservoir and Valve Enclosure (Front Mount Telescopic Hoist Only)	$	5,083	$	-

Customer Name	0
	0
Contact Ph.	0
PO #	0
Date	1/0/1900

SUBTOTAL (ALL MB2 CHOICE PICKS)	$ -	**(EA Unit)**
BODY QUANTITY	0	
TOTAL (LIST)	$ -	**Total**

Effective December 2016

KNAPHEIDE INSTALLED BODY PRICE LISTS
PRICE LIST
Standard Installation

MUST SELECT ONE OF THE HENDERSON DUMP BODIES LISTED. THE PRICE INCLUDES THE HYDRAULICS AND INSTALLATION . THE FOLLOWING IS INCLUDED IN THE STANDARD INSTALLATION OF THE DUMP BODY:

- **Installation and Paint of Dump Body (Paint is Deducted from the price if Stainless Steel is Selected)**
- **Valve / Hydraulic Reservoir for Operation of the Body (Load Sense Hydraulics)**
- **Dump Body LED Stop, Turn, Tail and Marker lights**
- **Includes hoses, fittings, back-up alarm, body-up light, rear mudflaps**
- **Includes freight and delivery**

BLACKBELT MAXX
ALL-SEASON MULTI-PURPOSE BODY

BLACKBELT MAXX
PRICE LIST

FEATURES:

- AR400 BODIES PRIMED/PAINTED/INSTALLED
- 201 AND 304 STAINLESS STEEL UNITS ARE NATURAL STAINLESS FINISH AND INSTALLED
- ALL BODIES COME STANDARD WITH SUMMER GATE.
- INCLUDES STD MILD STEEL 30 GALLON OIL RESERVOIR
- OPTIONAL WINTER GATES CONTAINS AUGER SALT/SAND SPREADER

SELECT (X)	DESCRIPTION			LIST PRICE	EXTENDED
	AR400 Sides/ends/floor, mild steel bracing	BODY LENGTH	11	$ 57,563	$ -
	201 stainless steel sides/ends/bracing with ar400 floor	BODY LENGTH	11	$ 59,052	$ -

	BlackBelt Maxx Tailgate Options	LIST PRICE	EXTENDED
	Deduct Summer Gate (AR Body)	$ (2,491)	$ -
	Deduct Summer Gate (201ss Body)	$ (3,028)	$ -
	Winter tailgate (201) (**must choose spinner kit or berm chute below**)	$ 9,494	$ -

	Winter Gate Options	LIST PRICE	EXTENDED
	Berm Chute for Winter Gate (Mild)	$ 242	$ -
	Berm Chute for Winter Gate (201ss)	$ 367	$ -
	Spinner Kit w/ Poly Disc	$ 586	$ -

	Misc Options	LIST PRICE	EXTENDED
	30 Gallon Oil res (201ss) ILO STD reservoir	$ 304	$ -
	Sloped Toolbox (Right Hand) (Mild)	$ 733	$ -
	Sloped Toolbox (Right Hand) (201ss)	$ 929	$ -

***BBMAXX LIQUID tank options located on Prewet Tab (if applicable)**

Customer Name	0
	0
Contact Ph.	0
PO #	0
Date	1/0/1900

SUBTOTAL (ALL BBMAXX CHOICE PICKS)	$ -	**(EA Unit)**
BODY QUANTITY	0	
TOTAL (LIST)	$ -	**Total**

Effective December 2016

KNAPHEIDE INSTALLED BODY PRICE LISTS

PRICE LIST

Standard Installation

MUST SELECT ONE OF THE HENDERSON DUMP BODIES LISTED. THE PRICE INCLUDES THE HYDRAULICS AND INSTALLATION . THE FOLLOWING IS INCLUDED IN THE STANDARD INSTALLATION OF THE DUMP BODY:

· Installation and Paint of Dump Body (Paint is Deducted from the price if Stainless Steel is Selected)
· Dump Body LED Stop, Turn, Tail and Marker lights
· Includes freight and delivery

Features:

- Cross Memberless Design
- 9" Mounting Height on telescopic hoist models
- 12" Mounting Height on Class 20 Scissor Hoist models
- 13" Mounting Height on Class 40/50 Scissor Hoist models
- 95" Outside Width, 85" Inside Width
- One-Piece subframe with modular cradle and rear hinge for quick installation
- Straight Headsheet has 85" wide integral cabshield with (2) integral windows on Telescopic hoist, (1) full window on Scissor Hoist
- Standard cab clearance of 53" with optional 50" or 64" clearance.
- 12ga Headsheet
- Double wall 12ga 201ss sides with boxed dirt shedding top rail
- Double wall 12ga 201ss tailgate sheet with sloped top rail
- Manual over-center tailgate release mechanism
- One-piece 3/16" AR400 floor with 2" floor to side radius (fixed sides, no radius on fold down sides)
- Tailgate has full perimeter boxing
- Flush mount, offset upper tailgate hinge plates
- 1-1/4" body rear hinge pins
- LED Light Pack

		HEGHTS (INCHES)		CAPACITY (Cubic Yard)	HOIST	HOIST		
SELECT (X)	LENGTH (FT)	Sides	Tailgate	Sides/Ends	Type	MODEL	LIST PRICE	EXTENDED
	8'	13"	19"	2.3/3.3	Telescopic	M80-3.5-3	$ 15,536	$ -
	8'	18"	24"	3.2/4.2	Telescopic	M80-3.5-3	$ 16,469	$ -
	9'	13"	19"	2.5/3.7	Telescopic	M80-3.5-3	$ 16,042	$ -
	9'	18"	24"	3.5/4.7	Telescopic	M80-3.5-3	$ 17,034	$ -
	9.5'	13"	19"	2.7/3.9	Telescopic	M80-3.5-3	$ 16,523	$ -
	9.5'	18"	24"	3.7/5.0	Telescopic	M90-3.5-3	$ 17,579	$ -
	10'	13"	19"	2.8/4.2	Telescopic	M90-3.5-3	$ 16,523	$ -
	10'	18"	24"	3.9/5.3	Telescopic	M90-3.5-3	$ 17,579	$ -
	11'	13"	19"	3.4/4.6	Telescopic	M100-3.5-3	$ 17,259	$ -
	11'	18"	24"	4.3/5.8	Telescopic	M100-3.5-3	$ 18,374	$ -
	11.5'	13"	19"	3.2/4.8	Telescopic	M100-3.5-3	$ 17,969	$ -
	11.5'	18"	24"	4.5/6.0	Telescopic	M100-3.5-3	$ 19,143	$ -
	8'	13"	19"	2.3/3.3	Class 20 Scissor	BP-20	$ 15,337	$ -
	8'	18"	24"	3.2/4.2	Class 20 Scissor	BP-20	$ 16,270	$ -
	9'	13"	19"	2.5/3.7	Class 20 Scissor	BP-20	$ 15,842	$ -
	9'	18"	24"	3.5/4.7	Class 20 Scissor	BP-20	$ 16,836	$ -
	9'	13"	19"	2.5/3.7	Class 40 Scissor	BP-40	$ 16,078	$ -
	9'	18"	24"	3.5/4.7	Class 40 Scissor	BP-40	$ 17,066	$ -
	9.5'	13"	19"	2.7/3.9	Class 40 Scissor	BP-40	$ 16,559	$ -
	9.5'	18"	24"	3.7/5.0	Class 40 Scissor	BP-40	$ 17,615	$ -
	10'	13"	19"	2.8/4.2	Class 40 Scissor	BP-40	$ 16,559	$ -
	10'	18"	24"	3.9/5.3	Class 40 Scissor	BP-40	$ 17,615	$ -
	11'	13"	19"	3.4/4.6	Class 40 Scissor	BP-40	$ 17,278	$ -
	11'	18"	24"	4.3/5.8	Class 40 Scissor	BP-40	$ 17,029	$ -
	11.5'	13"	19"	3.2/4.8	Class 40 Scissor	BP-40	$ 17,978	$ -
	11.5'	18"	24"	4.5/6.0	Class 40 Scissor	BP-40	$ 19,176	$ -
	9'	13"	19"	2.5/3.7	Class 50 Scissor	BP-50	$ 16,309	$ -
	9'	18"	24"	3.5/4.7	Class 50 Scissor	BP-50	$ 17,301	$ -
	9.5'	13"	19"	2.7/3.9	Class 50 Scissor	BP-50	$ 16,793	$ -
	9.5'	18"	24"	3.7/5.0	Class 50 Scissor	BP-50	$ 17,865	$ -
	10'	13"	19"	2.8/4.2	Class 50 Scissor	BP-50	$ 16,793	$ -
	10'	18"	24"	3.9/5.3	Class 50 Scissor	BP-50	$ 17,865	$ -
	11'	13"	19"	3.4/4.6	Class 50 Scissor	BP-50	$ 17,533	$ -
	11'	18"	24"	4.3/5.8	Class 50 Scissor	BP-50	$ 18,659	$ -
	11.5'	13"	19"	3.2/4.8	Class 50 Scissor	BP-50	$ 18,210	$ -
	11.5'	18"	24"	4.5/6.0	Class 50 Scissor	BP-50	$ 19,411	$ -

UNIT PRICING DOES NOT INCLUDE HYDRAULICS OR ELECTRIC PUMP PACK

	Headsheet Type (Must select 1 from list, Required)	LIST PRICE	EXTENDED
	Straight Headsheet with Integral Cabshield, 53" clearance	$ -	$ -
	Straight Headsheet with Integral Cabshield, 50" clearance	$ -	$ -
	Straight Headsheet with Integral Cabshield, 64" clearance	$ 59	$ -
	Inward Tapered Headsheet with Integral Cabshield, 53" clearance	$ 138	$ -
	Inward Tapered Headsheet with Integral Cabshield, 50" clearance	$ 138	$ -
	Inward Tapered Headsheet with Integral Cabshield, 64" clearance	$ 196	$ -
	Headsheet w/o integral cabshield and window	$ (317)	$ -
	Mark Three Options	**LIST PRICE**	**EXTENDED**
	Sides:		
	Single Wall 10ga 201ss Quick Release Fold Down Sides ILO double wall 12ga 201ss Fixed Sides	$ 1,203	$ -
	Tailgate:		
	Quick release tailgate with handle offset toward curb side, Single wall 10ga 201ss	$ 265	$ -
	Quick release tailgate with handle in center of tailgate, Single wall 10ga 201ss	$ 265	$ -
	Cylinder:		
	Double acting telescopic hoist cylinder ILO Single acting.	$ 1,980	$ -
	* For telescopic hoist bodies only. (Scissor hoist can be plumbed for either SA or DA hoist)		
	Hydraulic Pump Pack to operate hoist:		
	Basic Single Acting Electric Hydraulic Power Pack	$ 497	$ -
	Basic Double Acting Electric Hydraulic Power Pack (Requires DA hoist upgrade on Telescopic Body)	$ 960	$ -
	Central Hydraulic System to operate hoist, plow and spreader (see MTP Hitch Pricing)	**On Hitch Tab**	$ -
	Lights:		
	Front Amber marker lights, shipped loose	$ 83	$ -
	Cabshield Options: (for Non-Integral Cabshield Headsheet Type Only)		
	12" x 72" 201 Stainless Steel Cabshield installed	$ 1,041	$ -
	12" x 82" 201 Stainless Steel Cabshield installed	$ 1,076	$ -
	Headsheet Window: (For Non-Integral Cabshield Headsheet Type Only)		
	12" x 24" 201 Stainless Steel Window, Installed @ Factory	$ 469	$ -
	* Install Sheet Required @ Time of Order		
	Side Boards: (Not to be used in conjunction with Fold Down Sides upgrade)		
	8' - 9' Body, 201 Stainless Steel 12ga sloped sideboards, loose	$ 1,329	$ -
	9.5' - 11' Body, 201 Stainless Steel 12ga sloped sideboards, loose	$ 1,483	$ -
	11.5' Body, 201 Stainless Steel 12ga sloped sideboards, loose	$ 1,603	$ -
	Pintle Plate and Pintle Hitches		
	Pintle Plate,5/8",2" Receiver Hitch, 1 TON, w/D-rings	$ 718	$ -
	Pintle Plate,5/8",w/holes for Pintle Hitch , 1 TON, w/D-rings	$ 739	$ -
	Pintle Hook, 2" Combination	$ 199	$ -
	Pintle Hook w/ 2-5/16" Combination	$ 199	$ -
	8 ton combination w/2" ball pintle hitch	$ 161	$ -

Customer Name	0
	0
Contact Ph.	0
PO #	0
Date	1/0/1900

SUBTOTAL (ALL MARK3 CHOICE PICKS)	$ -	**(EA Unit)**
BODY QUANTITY	0	
TOTAL (LIST)	$ -	**Total**

Effective December 2016

Make sure to Select a Truck Portion Hitch under the Truck Hitch Tab

HENDERSON PRODUCTS ONE WAY PLOW - SLOTTED TRIP

- Two adjustable slotted trip assemblies and one center roller
- 10 ga. rolled moldboard
- (9) nine 1/2" x 3 ½" one-piece flame cut ribs.
- Continuous welded moldboard.
- Gusseted 6" x 4" x 1/2" bottom angle
- 2-1/2" x 2-1/2" x 3/8" top angle
- Two adjustable cast wear shoes, moldboard wear shoe on discharge end and nose shoe standard
- Two position adjustments for proper attack angle, 45° for standard cutting edge or 30° for carbide cutting edges
- Adjustable stabilizing arm with safety shear pin
- 1/2" one-piece cutting edge with AASHO center punching standard
- 94" push frame with two slotted trip lugs.
- 6" x 6" x 1/2" main push angle.
- 5" x 5" x 1/4" tubular push members.
- Highway orange paint
- Plow portion of hitch ***not included***

SELECT (X)	Cutting Egde Length	Input	Discharge	Cutting Path @ 35°	Approx. Weight	LIST PRICE	EXTENDED
	11'	30"	53"	116"	1850 lbs.	$ 7,716	$ -
	11'	40"	63"	116"	1970 lbs.	$ 8,198	$ -
	12'	29"	54"	126"	1910 lbs.	$ 7,879	$ -
	12'	39"	64"	126"	2030 lbs.	$ 8,252	$ -

	OWP Slotted Trip Options			LIST PRICE	EXTENDED
	3/16" steel moldboard ILO 10ga steel			$ 548	$ -
	10ga 304ss moldboard ILO 10ga steel			$ 2,276	$ -
	Sight markers, pair, (shipped loose)			$ 50	$ -
	Carbide Cutting Edge (3/4" x 6"), includes steel cover blade (ILO Standard)	Plow Cutting Length	FALSE	$ -	$ -
	12" Rubber Deflector, Installed			$ 460	$ -
	Wrap around curb guard, Installed			$ 151	$ -

	OWP Slotted Trip Plow Portion Hitch (Please Make Sure to Select One of These Options)		LIST PRICE	EXTENDED
	Pin hitch, plow portion, (installed)	*Available in 21", 30.5", and 33.5" widths	$ 567	$ -
	Pin & Loop hitch, plow portion, (installed)		$ 668	$ -
	Flat plate hitch, (installed)		$ 2,975	$ -
	Flat plate hitch with patrol wing mount, (installed)		$ 5,059	$ -
	Quick hitch, plow portion, (installed)	*Available in 30.5", and 33.5" widths	$ 1,109	$ -
	Quick Link, plow portion, (installed)		$ 599	$ -
	29" Husting, plow portion (installation standard when ordered with plow)		$ 1,267	$ -
	34" Husting, plow portion (installed)		$ 1,343	$ -
	Roller kit for Husting hitch		$ 485	$ -
	Torlock/Arrowhead, plow portion (installed)		$ 1,128	$ -

Customer Name	0
	0
Contact Ph.	0
PO #	0
Date	1/0/1900

SUBTOTAL (ALL OWP-FA CHOICE PICKS)	$ -	(EA Unit)
UNIT QUANTITY	0	
TOTAL (LIST)	$ -	Total

Effective December 2016

Make sure to Select a Truck Portion Hitch under the Truck Hitch Tab

HENDERSON PRODUCTS ONE WAY PLOW - FULL TRIP - REVERSIBLE

- Full moldboard trip with two external compression springs.
- 10 ga. rolled moldboard
- Seven 1/2" x 3 ½" one-piece flame cut ribs.
- Five moldboard-to-push frame pivot points with 1 1/4" bushings pinned to two 5/8" mounting ears.
- Continuous welded moldboard.
- Gusseted 4" x 4" x 3/4" bottom angle
- 3 1/2" x 2 1/2" x 3/8" top angle
- Attack angle is adjustable to 5°, 10°, 20°
- 5/8" x 8" one-piece cutting edge with AASHO punching standard
- Pushframe width is 96"
- Two 3" x 1 ½" x 10" nitrided double acting reversing cylinders
- Plow mounted cushion valve and hoses from cushion valve to reversing cylinders are standard.
- Highway orange moldboard, black pushframe
- Running gear not included
- Plow portion of hitch ***not included***

SELECT (X)	Cutting Egde Length	Input	Discharge	Cutting Path @ 35°	Approx. Weight	LIST PRICE	EXTENDED
	10	30"	48"	98"	1850 lbs.	$ 8,075	$ -
	11	30"	48"	108"	1970 lbs.	$ 8,579	$ -
	11	40"	56"	108"	1910 lbs.	$ 8,245	$ -
	12	40"	56"	118"	2030 lbs.	$ 8,636	$ -

	OWP Full Trip Reversible Options			LIST PRICE	EXTENDED
	10ga 304ss moldboard ILO 10ga steel			$ 2,276	$ -
	3" x 2" double acting reversing cylinders ILO standard			$ 229	$ -
	4" x 2" x double acting reversing cylinders ILO standard			$ 466	$ -
	Fixed angle plow ILO power reversing (35 degrees)			$ (785)	$ -
	Adjustable trip spring for easy adjustment of tripping force			$ 359	$ -
	Parking Jack (shipped loose)			$ 170	$ -
	Install parking jack @ factory			$ 63	$ -
	Sight markers, pair, (shipped loose)			$ 50	$ -
	12" Rubber Deflector, Installed			$ 460	$ -
	Wrap around curb guard, Installed (not to be combined with 1/2 moon guard)	Location	Discharge Only	$ 151	$ -
	1/2 Moon curb Guard, installed (not to be combined with wrap around guard)	Location	Discharge Only	$ 151	$ -
	Fabricated Moldboard Shoes (pair installed)			$ 324	$ -
	Carbide Cutting Edge (3/4" x 6"), includes steel cover blade (ILO Standard)	Plow Cutting Length	FALSE	$ -	$ -
	Rubber Cutting Edge, includes steel cover blade (ILO Standard)	Plow Cutting Length	FALSE	$ -	$ -

	Running Gear Options	LIST PRICE	EXTENDED
	1" x 6" Rectangular skid shoes with screw jack adjustment, pair (installed)	$ 1,179	$ -
	Cast Alloy skid shoes with screw jack adjustment (installed)	$ 1,362	$ -
	1" x 6" Carbide rectangular skid shoes with screw jack adjustment, pair (installed)	$ 1,444	$ -
	Mushroom shoes with screw jack adjustment, pair (installed)	$ 1,324	$ -
	Oscillating mushroom shoes with screw jack adjustment, pair (installed)	$ 2,099	$ -
	Oscillating carbide mushroom shoes with screw jack adjustment, pair (installed)	$ 2,969	$ -
	8" Caster wheels with screw jack adjustment, pair (installed)	$ 1,494	$ -
	10" Caster wheels with screw jack adjustment, pair (installed)	$ 1,683	$ -
	Pneumatic tires with screw jack adjustment, pair (installed)	$ 1,797	$ -
	Foam filled pneumatic tires with screw jack adjustment, pair (installed)	$ 2,118	$ -

	OWP Reversible Plow Portion Hitch (Please Make Sure to Select One of These Options)		LIST PRICE	EXTENDED
	Pin hitch, plow portion, (installed)	*Available in 21", 30.5", and 33.5" widths	$ 567	$ -
	Pin & Loop hitch, plow portion, (installed)		$ 668	$ -
	Flat plate hitch, (installed)		$ 2,975	$ -
	Flat plate hitch with patrol wing mount, (installed)		$ 5,059	$ -
	Quick hitch, plow portion, (installed)	*Available in 30.5", and 33.5" widths	$ 1,109	$ -
	Quick Link, plow portion, (installed)		$ 599	$ -
	29" Husting, plow portion (installation standard when ordered with plow)		$ 1,267	$ -
	34" Husting, plow portion (installed)		$ 1,343	$ -
	Roller kit for Husting hitch		$ 485	$ -
	Torlock/Arrowhead, plow portion (installed)		$ 1,128	$ -

Customer Name	0
	0
Contact Ph.	0
PO #	0
Date	1/0/1900

SUBTOTAL (ALL OWP-FT CHOICE PICKS)	$ -	(EA Unit)
UNIT QUANTITY	0	
TOTAL (LIST)	$ -	Total

Effective December 2016

Make sure to Select a Truck Portion Hitch under the Truck Hitch Tab

HENDERSON PRODUCTS REVERSIBLE SNOW PLOW (RSP)

- Full moldboard trip with two external compression springs.
- Two 3" x 1 1/2" x 10" nitrided hydraulic cylinders are double-acting for heavy duty power reversing.
- Eight 1/2" x 3 1/2" edge-rolled ribs for extra strength and rigidity.
- One-piece moldboard is rolled instead of break-formed presenting a smooth, clean surface for better material flow.
- Plow-mounted cushion valve and hoses from cushion valve to reversing cylinders are standard.
- All parts are continuous welded.
- Level lift design allows the plow to remain level with road in any position with a Henderson hitch.
- Reinforced 4" x 4" x 3/4" bottom angle.
- 3 1/2" x 2 1/2" x 3/8" top angle with holes to allow moisture to escape.
- Attack angle is adjustable to 5°, 10°, and 20°.
- 5/8" x 8" one piece cutting edge with AASHO punching is standard.
- Push frame width is 96".
- Push frame semi-circle is 3 ½" x 3 ½" x 1/2" angle welded to 4" x 4" x 3/8" structural tube.
- Five moldboard-to-push frame pivot points with 1 1/4" bushings pinned to two 5/8" mounting ears.
- Moldboard is primed with a high quality catalyzed primer and finish painted with Highway orange paint.
- Push frame and hitch components are powder coat painted black.
- Plow portion of hitch ***not included*** .

SELECT (X)	Cutting Egde Length	Moldboard Height	Cutting Path @ 35°	Approx. Weight	LIST PRICE	EXTENDED
	10	36"	98"	1750 lbs.	$ 6,713	$ -
	10	42"	98"	1760 lbs.	$ 6,808	$ -
	10	48"	98"	1790 lbs.	$ 6,902	$ -
	11	36"	108"	1815 lbs.	$ 6,776	$ -
	11	42"	108"	1830 lbs.	$ 6,902	$ -
	11	48"	108"	1860 lbs.	$ 6,991	$ -
	12	36"	118"	1875 lbs.	$ 6,865	$ -
	12	42"	118"	1890 lbs.	$ 6,959	$ -
	12	48"	118"	1925 lbs.	$ 7,054	$ -

	RSP Trip Options	LIST PRICE	EXTENDED
	5 position adjustable full trip springs ILO standard non-ajustable compression springs	$ 359	$ -
	Adjustable one piece cutting edge trip torsion spring ILO standard compression spring trip	$ 1,875	$ -
	Full moldboard Cannon trip ILO standard compression spring full trip	$ 366	$ -

	RSP Moldboard Options			LIST PRICE	EXTENDED
	Integral Shield moldboard ILO Standard			$ 221	$ -
	3/16" steel moldboard ILO 10ga steel			$ 435	$ -
	10ga 304ss moldboard ILO 10ga steel			$ 1,627	$ -
	1/4" Polymer over 10ga steel moldboard (not avail on 48" integral shield)			$ 1,034	$ -
	3/8" Polymer moldboard ILO 10ga steel (not avail on 48" integral shield)			$ 1,122	$ -
	One "Mouse Ear" on each end of moldboard (available on integral shield only)			$ 1,305	$ -
	Mailbox cut on right hand side of moldboard			$ 403	$ -
	3" x 2" double acting reversing cylinders ILO standard			$ 240	$ -
	4" x 2" x double acting reversing cylinders ILO standard			$ 466	$ -
	Parking Jack (shipped loose)			$ 170	$ -
	Install parking jack @ factory			$ 63	$ -
	Sight markers, pair, (shipped loose)			$ 49	$ -
	12" Rubber Deflector, Installed			$ 460	$ -
	Wrap around curb guard, Installed	Location	Discharge Only	$ 151	$ -
	1/2 Moon curb Guard, installed	Location	Discharge Only	$ 151	$ -
	Fabricated Moldboard Shoes (pair installed)			$ 334	$ -
	Carbide Cutting Edge (3/4" x 6"), includes steel cover blade (ILO Standard)	Plow Cutting Length	FALSE	$ -	$ -
	Rubber Cutting Edge, includes steel cover blade (ILO Standard)	Plow Cutting Length	FALSE	$ -	$ -

	Running Gear Options	LIST PRICE	EXTENDED
	1" x 6" Rectangular skid shoes with screw jack adjustment, pair (installed)	$ 1,179	$ -
	Cast Alloy skid shoes with screw jack adjustment (installed)	$ 1,362	$ -
	1" x 6" Carbide rectangular skid shoes with screw jack adjustment, pair (installed)	$ 1,444	$ -
	Mushroom shoes with screw jack adjustment, pair (installed)	$ 1,324	$ -
	Oscillating mushroom shoes with screw jack adjustment, pair (installed)	$ 2,099	$ -
	Oscillating carbide mushroom shoes with screw jack adjustment, pair (installed)	$ 2,969	$ -
	8" Caster wheels with screw jack adjustment, pair (installed)	$ 1,494	$ -
	10" Caster wheels with screw jack adjustment, pair (installed)	$ 1,683	$ -
	Pneumatic tires with screw jack adjustment, pair (installed)	$ 1,797	$ -
	Foam filled pneumatic tires with screw jack adjustment, pair (installed)	$ 2,118	$ -
	Snow Wheels, installed	$ 4,198	$ -

	RSP Reversible Plow Portion Hitch (Please Make Sure to Select One of These Options)		LIST PRICE	EXTENDED
	Pin hitch, plow portion, (installed)	*Available in 21", 30.5", and 33.5" widths	$ 567	$ -
	Pin & Loop hitch, plow portion, (installed)		$ 668	$ -
	Flat plate hitch, (installed)		$ 2,975	$ -
	Flat plate hitch with patrol wing mount, (installed)		$ 5,059	$ -
	Quick hitch, plow portion, (installed)	*Available in 30.5", and 33.5" widths	$ 1,109	$ -
	Quick Link, plow portion, (installed)		$ 599	$ -
	29" Husting, plow portion (installation standard when ordered with plow)		$ 1,267	$ -
	34" Husting, plow portion (installed)		$ 1,343	$ -
	Roller kit for Husting hitch		$ 485	$ -
	Torlock/Arrowhead, plow portion (installed)		$ 1,128	$ -

Customer Name	0
	0
Contact Ph.	0
PO #	0
Date	1/0/1900

SUBTOTAL (ALL RSP CHOICE PICKS)	$ -	(EA Unit)
UNIT QUANTITY	0	
TOTAL (LIST)	$ -	Total

Effective December 2016

Make sure to Select a Truck Portion Hitch under the Truck Hitch Tab

HENDERSON PRODUCTS MEDIUM TRIP SNOW PLOW (MTP)

- 12ga 201ss moldboard sheet
- 3/8" UHMW orange poly moldboard sheet option
- 4" x 4" x 1/2" structural main moldboard angle
- (4) 3/8" thick carbon steel flame cut moldboard ribs
- 15° attack angle
- Level-lift design - keeps plow level to the road at all time, when used with Henderson Hitch
- Single Trip-Edge moldboard connection with adjustable torsion springs
- 2" x 10" Single acting nitrided reversing cylinders

SELECT (X)	Cutting Egde Length	Moldboard Material	Approx. Weight (w/Hitch)	LIST PRICE	EXTENDED
	8'	201ss	920	$ 7,137	$ -
	9'	201ss	955	$ 7,373	$ -
	10'	201ss	990	$ 7,598	$ -
	8'	Poly	865	$ 7,289	$ -
	9'	Poly	910	$ 7,526	$ -
	10'	Poly	955	$ 7,751	$ -
	!!Please Ensure to Select an MTP Hitch System under Truck Hitch Tab!!				

	MTP Cutting Edge Options	LIST PRICE	EXTENDED
	8' Carbide Cutting Edge ILO STD	$ 894	$ -
	9' Carbide Cutting Edge ILO STD	$ 1,005	$ -
	10' Carbide Cutting Edge ILO STD	$ 1,118	$ -

	MTP Light Kit Option:	LIST PRICE	EXTENDED
	MTP Light Kit (Select applicable adapter below)	$ 422	$ -
	Headlight adapter 2d/2b (incl with light pack) (select light pack above)	$ -	$ -
	Headlight adapter HB5 (incl with light pack) (select light pack above)	$ -	$ -

	MTP Misc Options	LIST PRICE	EXTENDED
	Rubber Deflecttor Installed	$ 655	$ -
	Site Marker Kit (loose)	$ 52	$ -

Customer Name	0
	0
Contact Ph.	0
PO #	0
Date	1/0/1900

SUBTOTAL (ALL RSP CHOICE PICKS)	$ -	(EA Unit)
UNIT QUANTITY	0	
TOTAL (LIST)	$ -	Total

Effective December 2016

HENDERSON WING SYSTEM
PRICE LIST

FEATURES:

- Fixed moldboard ("no-trip")
- 10 Ga. rolled moldboard with 1/2" x 3" one-piece flame cut ribs.
- 30" straight continuous welded moldboard.
- Gusseted 4" x 4" x 3/4" bottom angle.
- Double acting cylinder for direct lift of heel.
- 1/2" x 6" one piece cutting edge with AASHO punching standard.
- Low profile mast with high tensile steel slide.
- Double-acting cylinder for direct lift of toe.
- 8" mechanical float.
- Single heavy duty telescoping push arm with spring cushion and safety shear pin.
- Above or below frame support allows for special mounting configurations **(specify when ordering).**
- Moldboard is primed with a high quality catalyzed primer and finish painted with Highway Orange paint.
- Mounting hardware and hitch components are powder coat painted black.
- Needle valves for speed control of functions included.

SELECT (X)	Cutting Egde Length	Moldboard Height	Weight of Wing Only	Weight of Wing, Mast/Rear Support	LIST PRICE	EXTENDED
	8'	30"	500 lbs.	1500 lbs.	$ 6,859	$ -
	9'	30"	565 lbs.	1565 lbs.	$ 7,031	$ -
	10'	30"	625 lbs.	1625 lbs.	$ 7,951	$ -
	11'	30"	690 lbs.	1690 lbs.	$ 8,136	$ -
	12'	30"	755 lbs.	1755 lbs.	$ 8,404	$ -

	Henderson HWS Wing Options			LIST PRICE	EXTENDED
	Full moldbaord trip (includes two telescopic push arms)			$ 1,028	$ -
	Adjustable Cutting Edge Trip-Torsion Spring ILO STD Non-Trip (not to be combined with Full Trip or Smart Link)			$ 1,616	$ -
	Smart Link Trip System (not to be combined with full trip option)			$ 2,588	$ -
	Power slide kit (for use with cross tube and cheek plate mounting kit only)			$ 556	$ -
	Fabricated moldboard wear shoe, installed			$ 172	$ -
	Hydraulic adjustable cutting path			$ 2,439	$ -
	Hydraulic adjustable cutting path, with nitrogen charged cylinder			$ 4,221	$ -
	Wrap around curb guard, installed			$ 153	$ -
	Carbide cutting egde with steel cover plate (ILO Standard)	**Plow Cutting Edge Length**	**FALSE**		
	Tapered moldbaord ILO standard straight			$ 1,076	$ -
	Single function ILO dual function			$ (241)	$ -
	D-cell cylinder in wing ILO standard			$ 964	$ -
	Standard wing with double push arms ILO single push arms			$ 779	$ -

Customer Name	0
	0
Contact Ph.	0
PO #	0
Date	1/0/1900

SUBTOTAL (ALL HWS CHOICE PICKS)	$ -
UNIT QUANTITY	
TOTAL (LIST)	$ -

Effective December 2016

HENDERSON SD (CABLE) & SDH (ALL HYDRAULIC) LEVELING WING SYSTEM
PRICE LIST

FEATURES:

- 7 gauge moldboard with 8 flame cut ribs. Six (6) ribs are 3/8" steel, the two drive ribs are ½".
- Continuous welded one-piece moldboard.
- Top angle is a 2 ½" x 2 ½" x 3/8" structural angle. Wing is further reinforced by two (2) intermediate full length horizontal braces of 3 ½" x 3 ½" x ½" structural angles.
- Bottom angle is a 5" x 3 ½" x ¾" structural angle.
- 1/2" x 8" one piece cutting edge with AASHO punching standard.
- One moldboard shoe on discharge end.
- Front (8") mast is canted 8° rearward
- Moldboard is primed with a high quality catalyzed primer and finish painted with Highway Orange paint.
- Mounting hardware and hitch components are powder coat painted black.
- Rear (12") straight mast includes cylinders and a 40 gallon reservoir and valve cabinet integral with rear mast frame (68" benching capability) or (60" SDH-Hydraulic).
- Non – tripping moldboard.
- Two standard wing braces (non-tripping).
- Power tilt hitch ***not included***. (see prices below)

REQUIRES POWER TILT TRUCK HITCH

SELECT (X)	Cutting Egde Length	OVERALL MOLDBOARD LENGTH	MOLDBOARD HEIGHT	APPROXIMATE WEIGHT	LIST PRICE	EXTENDED
	10'	11'	29" Intake / 38" discharge	3,480 lbs.	$ 16,016	$ -
	11'	12'	29" Intake / 39" discharge	3,580 lbs.	$ 16,348	$ -
	12'	13'	29" Intake / 40" discharge	3,680 lbs.	$ 16,642	$ -
	13'	14'	29" Intake / 41" discharge	3,780 lbs.	$ 16,859	$ -

REQUIRES POWER TILT TRUCK HITCH

	Henderson SD and SDH Wing Options			LIST PRICE	EXTENDED
	All hydraulic wing ILO STD		no charge	$ -	$ -
	Non-tripping moldboard and wing braces with one shock absorbing compression spring on lower brace ILO standard braces			$ 262	$ -
	Full trip moldboard, trip dee, and wing braces (includes one bottom standard brace, one top extension spring brace ILO standard non-trip			$ 1,705	$ -
	Full trip moldboard, trip dee, and wing braces (includes one bottom shock brace, one top extension brace ILO Standard non-trip.			$ 2,031	$ -
	High lift leveling capability (86") ILO standard 68" (cable wing only)			$ 1,360	$ -
	Canted rear mast ILO Straight (cable wing only)			$ 243	$ -
	7ga stainless steel moldboard ILO standard steel. Natural finish on moldboard face.			$ 1,627	$ -
	Carbide cutting egde with steel cover plate (ILO Standard)	Plow Cutting Edge Length	FALSE		
	One additional moldbaord wear shoe located on intake (installed)			$ 153	$ -
	Two additional moldbaord wear shoes located on intake and midway, installed			$ 306	$ -
	Wrap around curb guard, Installed			$ 153	$ -
	36" orange site marker (shipped loose)			$ 26	$ -
	Extra set of drive ribs (11' and longer cutting edge edges moldboard)			$ 338	$ -

Customer Name	0
	0
Contact Ph.	0
PO #	0
Date	1/0/1900

REQUIRES POWER TILT TRUCK HITCH

SUBTOTAL (ALL SD LWNG CHOICE PICKS)	$ -	(EA Unit)
UNIT QUANTITY	0	
TOTAL (LIST)	$ -	Total

Effective December 2016

HENDERSON MID MOUNT WING SYSTEM
PRICE LIST

FEATURES:

- 10 Ga. rolled moldboard with 3/8" one-piece flame cut ribs.
- 27" continuous welded moldboard.
- Gusseted 4" x 4" x 3/8" bottom angle.
- 2" x 2" x 3/16" structural tube top angle.
- Double acting cylinder for direct lift of heel.
- 1/2" x 6" one piece cutting edge with AASHO punching standard.
- Low profile mast with high tensile steel slide.
- Double-acting cylinder for direct lift of toe.
- 7" mechanical float.
- Single heavy duty telescoping push arm with spring cushion and safety shear pin.
- Moldboard is primed with a high quality catalyzed primer and finish painted with Highway Orange paint.
- Mounting hardware and hitch components are powder coat painted black.

SELECT (X)	Cutting Egde Length	MOLDBOARD HEIGHT	WEIGHT OF MOLDBOARD	WEIGHT OF COMPLETE WING	LIST PRICE	EXTENDED
	6'	27"	370 LBS.	1020 LBS.	$ 13,706	$ -
	7'	27"	400 LBS.	1050 LBS.	$ 13,853	$ -
	8'	27"	430 LBS.	1080 LBS.	$ 13,993	$ -

	Henderson Mid Mount Wing Options			LIST PRICE	EXTENDED
	Fabricated Moldboard wear shoe, installed	Location	Discharge End Only	$ 172	$ -
	Wrap around curb guard, Installed			$ 153	$ -
	Smart Link Trip System ILO STD non-trip mast system.			$ 2,588	$ -
	Adjustable cutting edge trip-torsion spring. (not to be combined with Smart Link Option)			$ 1,616	$ -
	Carbide cutting egde with steel cover plate (ILO Standard)	Plow Cutting Edge Length	FALSE		$ -
	36" orange site marker (shipped loose)			$ 83	$ -

Customer Name	0
	0
Contact Ph.	0
PO #	0
Date	1/0/1900

SUBTOTAL (ALL MMWNG CHOICE PICKS)	$ -	(EA Unit)
UNIT QUANTITY	0	
TOTAL (LIST)	$ -	Total

Effective December 2016

HENDERSON UNDERBODY SCRAPER SYSTEM
PRICE LIST

FEATURES:

- Blade lengths: 10',11',12'
- 1" thick x 20" height (40/50 Carbon Steel) Moldboard offset & punched for standard cutting edges.
- 1/2"x 6" double beveled cutting edge (AASHO Top punched)
- One piece, 1" thick reversing table
- (2) Reversing cylinders with 4" bore, 12-1/2" stroke, 2" dia Nitrided rods. Cylinder attached via 2" 1045 cold rolled mounting pins
- Unlimited scraping angle up to 45 degrees
- One piece 5/8" formed steel hanger board
- 1" thick hold down blocks with (3), 1" grade 8 bolts.
- 3/8" Polyurethane hold down wear pads between reversing circle and hold down blocks
- (4) 2-1/2" dia. x 6-1/2" long moldboard hinges (1045 steel, cross bolt retention)
- Hinge shaft 2.5" O.D. (1045 cold rolled steel)
- Trip spring canisters include (2) 3-1/2" bore x 9" stroke x 2" dia Nitrided rods. (Springs are .87 dia wire x 5.88 O.D. x 18" long)
- ¾" thick truck mount hanger plate
- All pivot points are greaseable
- Hydraulic tubing across hanger board and hoses from trip canister cylinders included. Reversing cylinder hoses NOT included.
- Push frame is primed with a high quality catalyzed primed and finish painted black.

SELECT (X)	Cutting Egde Length	MOLDBOARD HEIGHT	CUTTING WIDTH @ 45 DEGREES	APPROXIMATE WEIGHT	LIST PRICE	EXTENDED
	10'	20"	84"	2370 LBS.	$ 15,143	$ -
	11'	20"	93"	2430 LBS.	$ 15,502	$ -
	12'	20"	102"	2500 LBS.	$ 15,861	$ -

	Henderson Underbody Scraper Options			LIST PRICE	EXTENDED
	Wrap around curb guard, Installed	Location	Discharge End Only	$ 154	$ -
	Manual angle moldboard ILO power reverse			$ (529)	$ -
	Cushion valve for reversing cylinders			$ 221	$ -
	Relief valve for scraper down pressure (required)			$ 182	$ -
	5/8" x 8" cuttign edge ILO standard	Plow Cutting Edge Length	FALSE		
	Carbide cutting egde with steel cover plate (ILO Standard)	Plow Cutting Edge Length	FALSE		
	Fixed angle underbody scraper ILO standard power reverse Underbody scraper			$ (6,695)	$ -

Customer Name	0
	0
Contact Ph.	0
PO #	0
Date	1/0/1900

SUBTOTAL (ALL UBS CHOICE PICKS)	$ -	(EA Unit)
UNIT QUANTITY	0	
TOTAL (LIST)	$ -	Total

Effective December 2016

HENDERSON V-BOX SPREADER
PRICE LIST

Prices include installation, freight, hoses & QDs to the rear

HENDERSON FSH I V-BOX SPREADER

- 50:1 ratio conveyor gearcase, 1.5" drive shaft.
- Six tooth cast iron sprockets.
- 1 1/4" idler with roller bearings.
- 4" idler shaft adjustment.
- Formed in chain shields.
- 10 gauge sides and ends.
- 7 gauge replaceable floor.
- 7 gauge sills.
- 24 inch conveyor.
- Pintle type conveyor chain with ¼" x 1 ½" crossbars on 4.5" centers.
- Screwjack type feed gate control curbside.
- Steep 45-degree side slope.
- Body width 84"
- Zinc plated hardware.
- 20" spinner disk with 6 replaceable stainless steel vanes.
- Telescopic spinner chute provides spinner disc adjustment from 29" – 38" below mounting surface.
- Three external adjustable deflectors and one front fixed deflector.
- Mild steel units painted highway orange.
- Dump body hold-downs **not included-see options.**
- 304 SS or 201 SSunits unpainted with non-SS components painted aluminum

SELECT (X)	LENGTH	Side Height	Construction	Capacity Cu.Yds	Approx. Weight	LIST PRICE	EXTENDED
	8	**48**	**Mild Steel**	4.5	1695	$ 9,104	$ -
	9	**48**	**Mild Steel**	5.1	1845	$ 9,281	$ -
	10	**48**	**Mild Steel**	5.6	1995	$ 9,439	$ -
	11	**48**	**Mild Steel**	6.2	2145	$ 9,774	$ -
	12	**48**	**Mild Steel**	6.8	2295	$ 10,085	$ -
	13	**48**	**Mild Steel**	7.3	2445	$ 10,671	$ -
	14	**48**	**Mild Steel**	7.9	2595	$ 11,555	$ -
	15	**48**	**Mild Steel**	8.4	2745	$ 11,854	$ -
	16	**48**	**Mild Steel**	8.9	2895	$ 12,098	$ -

	Hopper/Conveyor Upgrades				**LIST PRICE**	**EXTENDED**
	304 stainless spreader 12ga ILO 10ga deduct		**Body Length**		0	$ -
	Spring loaded idler adjustment ILO STD				$ 220	$ -
	25:1 conveyor gearbox ILO Standard 50:1				$ 73	$ -
	Chain oiler, installed (not avail with auger optinon)				$ 250	$ -
	3/8" x 1-1/2" cross bars ILO STD 1/4" x 1-1/2"				$ 177	$ -
	Conveyor motor with integral speed sensor				$ 311	$ -
	Front Idler adjustments Extended to Rear		**Body Length**		0	$ -
	Front Idler grease tubes extended to rear		**Body Length**		0	$ -
	Inverted Vee and Top Screens				**LIST PRICE**	**EXTENDED**
	Inverted Vee, installed		**Vee Material**			$ -
	Standard duty top grate screens, installed				FALSE	$ -
	Heavy duty top grate screens, installed				FALSE	$ -
	Spinner Chute Upgrades				**LIST PRICE**	**EXTENDED**
	Tilt Up Spinner Kit, with hand crank wrench, installed		**Tip Up Material**			$ -
	20" Poly Urethane Spinner Disc ILO Standard Steel				$ 183	$ -
	Hold Down Kits				**LIST PRICE**	**EXTENDED**
	Dump body hold down kit (ratchet strap)				$ 476	$ -
	Dump body hold down kit (ratchet chain binders)				$ 625	$ -
	Dump body hold down kit (chain binders)				$ 427	$ -
	Dump body hold down kit (basic chain)				$ 293	$ -
	Trunnion Tailgate Latch for dump body (mild)				$ 271	$ -
	Cabshields				**LIST PRICE**	**EXTENDED**
	58" to 62" cab height (mild steel)				$ 671	$ -
	64" to 70" cab height (mild steel)				$ 695	$ -
	58" to 62" cab height (stainless steel)				$ 1,346	$ -
	64" to 70" cab height (stainless steel)				$ 1,398	$ -
	Ladders				**LIST PRICE**	**EXTENDED**
	Rear mount ladder, installed (mild steel)				$ 555	$ -
	Rear mount ladder, installed (stainless steel)				$ 1,061	$ -
	Side mount ladder for frame kit only, installed (mild)				$ 555	$ -
	Side mount ladder for frame kit only, installed (stainless)				$ 1,053	$ -
	Misc				**LIST PRICE**	**EXTENDED**
	Rubber side shields, installed		**Body Length**		0	$ -
	Metal spill shield, front or rear	Material Type	Install Location	**N/A**		$ -
	Rear bumper (mild) shipped loose				$ 518	$ -

	Spacer Bars, installed			$ 366	$ -
	18 HP Engine/Pump/Tank/Group (not available on 15' and 16' chain spreaders, or any auger spreaders			$ 6,366	$ -
	Spreader Stands			**LIST PRICE**	**EXTENDED**
	IS bolt-on stand (mild steel, installed)			$ 3,329	$ -
	IS bolt-on stand (stainless steel, installed)			$ 5,489	$ -
	HD Tube Stand - Mild Steel, installed	**Body Length**		0	$ -
	Paint			**LIST PRICE**	**EXTENDED**
	Highway Yellow paint ILO Orange (mild steel units only)	**Body Length**		0	$ -

Customer Name	0
	0
Contact Ph.	0
PO #	0
Date	1/0/1900

SUBTOTAL (ALL FSH I CHOICE PICKS)	$ -	**(EA Unit)**
UNIT QUANTITY		
TOTAL (LIST)	$ -	**Total**

Effective December 2016

HENDERSON V-BOX SPREADER
PRICE LIST

Prices include installation, freight, hoses & QDs to the rear

HENDERSON FSH II V-BOX SPREADER

- Eight tooth cast iron sprockets.
- 4" spring loaded idler adjustment with 1 1/2" roller bearings.
- Formed in chain shields.
- 10 gauge sides and ends.
- 7 gauge replaceable floor.
- 7 gauge sills.
- 24" conveyor.
- Pintle type conveyor chain with ¼" x 1 ½" crossbar spacing on 4 ½" centers.
- Screwjack type feed gate control curb side.
- Steep 45 degree side slope.
- Body width 84" wide.
- Zinc plated hardware.
- 20" spinner disk with 6 replaceable stainless steel vanes.
- Telescopic spinner chute provides spinner disc adjustment from 29" – 38" below mounting surface.
- Three external adjustable deflectors and one front fixed deflector with overlapping corners.
- Dump body hold-downs **not included-see options.**
- Mild steel units painted highway orange.
- 304 SS or 201 SSunits unpainted with non-SS components painted aluminum

SELECT (X)	LENGTH	Side Height	Construction	Capacity Cu.Yds	Approx. Weight	LIST PRICE	EXTENDED
	8	**50**	**Mild Steel**	4.5	1760	$ 9,762	$ -
	9	**50**	**Mild Steel**	5.1	1905	$ 9,933	$ -
	10	**50**	**Mild Steel**	5.6	2070	$ 10,098	$ -
	11	**50**	**Mild Steel**	6.2	2225	$ 10,415	$ -
	12	**50**	**Mild Steel**	6.8	2380	$ 10,738	$ -
	13	**50**	**Mild Steel**	7.3	2535	$ 11,323	$ -
	14	**50**	**Mild Steel**	7.9	2690	$ 12,207	$ -
	15	**50**	**Mild Steel**	8.4	2845	$ 12,500	$ -
	16	**50**	**Mild Steel**	8.9	3001	$ 12,744	$ -

	Hopper/Conveyor Upgrades			**LIST PRICE**	**EXTENDED**
	304 stainless spreader 12ga ILO 10ga deduct	*Body Length*		0	$ -
	Spring loaded idler adjustment ILO STD (not avail with auger optinon)			$ 220	$ -
	25:1 conveyor gearbox ILO Standard 50:1 (not avail with auger optinon)			$ 73	$ -
	Chain oiler, installed (not avail with auger optinon)			$ 250	$ -
	3/8" x 1-1/2" cross bars ILO STD 1/4" x 1-1/2" (not to be combined with belt over option)			$ 177	$ -
	Conveyor motor with integral speed sensor			$ 311	$ -
	Front Idler adjustments Extended to Rear (not applicable with Auger(s) option)	*Body Length*		0	$ -
	Front Idler grease tubes extended to rear	*Body Length*		0	$ -
	Auger Options (inlcudes top screens and saftey interlock. Vee included on 12' units and longer)			**LIST PRICE**	**EXTENDED**
	Single 7" dia auger conveyor ILO chain	*Body Length*		0	$ -
	Dual 7" dia auger conveyor ILO chain	*Body Length*		0	$ -
					$ -
	Inverted Vee and Top Screens			**LIST PRICE**	**EXTENDED**
	Inverted Vee, installed	*Vee Material*			$ -
	Standard duty top grate screens, installed (do not select with auger option)			FALSE	$ -
	Heavy duty top grate screens, installed (do not select with auger option)			FALSE	$ -
	Belt over chain ILO STD Pintle Chain.			FALSE	$ -
	Spinner Chute Upgrades			**LIST PRICE**	**EXTENDED**
	Tilt Up Spinner Kit, with hand crank wrench, installed	*Tip Up Material*			$ -
	20" Poly Urethane Spinner Disc ILO Standard Steel			$ 183	$ -
	Hold Down Kits			**LIST PRICE**	**EXTENDED**
	Dump body hold down kit (ratchet strap)			$ 476	$ -
	Dump body hold down kit (ratchet chain binders)			$ 625	$ -
	Dump body hold down kit (chain binders)			$ 427	$ -
	Dump body hold down kit (basic chain)			$ 293	$ -
	Trunnion Tailgate Latch for dump body (mild)			$ 271	$ -
	Cabshields			**LIST PRICE**	**EXTENDED**
	58" to 62" cab height (mild steel)			$ 671	$ -
	64" to 70" cab height (mild steel)			$ 695	$ -
	58" to 62" cab height (stainless steel)			$ 1,346	$ -
	64" to 70" cab height (stainless steel)			$ 1,398	$ -
	Ladders			**LIST PRICE**	**EXTENDED**
	Rear mount ladder, installed (mild steel)			$ 555	$ -
	Rear mount ladder, installed (stainless steel)			$ 1,061	$ -
	Side mount ladder for frame kit only, installed (mild)			$ 555	$ -

	Side mount ladder for frame kit only, installed (stainless)				$ 1,053	$ -
	Misc				**LIST PRICE**	**EXTENDED**
	Rubber side shields, installed		*Body Length*		0	$ -
	Metal spill shield, front or rear	Material Type	**Install Location**	**N/A**		$ -
	Rear bumper (mild) shipped loose				$ 518	$ -
	Spacer Bars, installed				$ 366	$ -
	18 HP Engine/Pump/Tank/Group (not available on 15' and 16' chain spreaders) (Not available with Auger Option)				$ 6,366	$ -
	Spreader Stands				**LIST PRICE**	**EXTENDED**
	IS bolt-on stand (mild steel, installed)				$ 3,329	$ -
	IS bolt-on stand (stainless steel, installed)				$ 5,489	$ -
	HD Tube Stand - Mild Steel, installed		*Body Length*		0	$ -
	Paint				**LIST PRICE**	**EXTENDED**
	Highway Yellow paint ILO Orange (mild steel units only)		*Body Length*		0	$ -

Customer Name	0
	0
Contact Ph.	0
PO #	0
Date	1/0/1900

SUBTOTAL (ALL FSH II CHOICE PICKS)	$ -	**(EA Unit)**
UNIT QUANTITY		
TOTAL (LIST)	$ -	**Total**

Effective December 2016

HENDERSON V-BOX SPREADER
PRICE LIST

Prices include installation, freight, hoses & QDs to the rear

HENDERSON FSH III V-BOX SPREADER

- 6:1ratio conveyor gearcase, 2" drive & idler shaft with ball bearings.
- Spring loaded idler shaft.
- Eight tooth cast iron sprockets.
- 10 gauge sides and ends with replaceable chain shields.
- 7 gauge replaceable bolt-in floor.
- 24 inch conveyor.
- Pintle type conveyor chain with 3/8" x 1 ½" crossbars on 4 ½" centers.
- Screwjack type feed gate control curb side.
- Steep 45 degree side slope.
- Body width 84" wide by 50" high.
- Zinc plated hardware.
- 20" spinner disk with 6 replaceable stainless steel vanes.
- Telescopic spinner chute provides spinner disc adjustment from 29" – 38" below mounting surface.
- Three external adjustable deflectors and one front fixed deflector with overlapping corners.
- Dump body hold-downs **not included-see options.**
- Mild steel units painted highway orange.
- 304 SS or 201 SSunits unpainted with non-SS components painted aluminum

SELECT (X)	LENGTH	Side Height	Construction	Capacity Cu.Yds	Approx. Weight	LIST PRICE	EXTENDED
	8	**50**	**Mild Steel**	4.5	1760	$ 10,988	$ -
	9	**50**	**Mild Steel**	5.1	1905	$ 11,153	$ -
	10	**50**	**Mild Steel**	5.6	2070	$ 11,311	$ -
	11	**50**	**Mild Steel**	6.2	2225	$ 11,640	$ -
	12	**50**	**Mild Steel**	6.8	2380	$ 11,957	$ -
	13	**50**	**Mild Steel**	7.3	2535	$ 12,549	$ -
	14	**50**	**Mild Steel**	7.9	2690	$ 13,427	$ -
	15	**50**	**Mild Steel**	8.4	2845	$ 13,732	$ -
	16	**50**	**Mild Steel**	8.9	3001	$ 13,970	$ -

	Hopper/Conveyor Upgrades			**LIST PRICE**	**EXTENDED**
	304 stainless spreader 12ga ILO 10ga deduct	*Body Length*		0	$ -
	Spring loaded idler adjustment ILO STD			$ 220	$ -
	25:1 conveyor gearbox ILO Standard 6:1			$ (266)	$ -
	50:1 conveyor gearbox ILO Standard 6:1			$ (332)	$ -
	Chain oiler, installed			$ 250	$ -
	Conveyor motor with integral speed sensor			$ 311	$ -
	Front Idler adjustments Extended to Rear	*Body Length*		0	$ -
	Front Idler grease tubes extended to rear	*Body Length*		0	$ -
	Inverted Vee and Top Screens			**LIST PRICE**	**EXTENDED**
	Inverted Vee, installed	*Vee Material*			$ -
	Standard duty top grate screens, installed			FALSE	$ -
	Heavy duty top grate screens, installed			FALSE	$ -
	Belt over chain ILO STD Pintle Chain.			FALSE	$ -
	Spinner Chute Upgrades			**LIST PRICE**	**EXTENDED**
	Tilt Up Spinner Kit, with hand crank wrench, installed	*Tip Up Material*			$ -
	20" Poly Urethane Spinner Disc ILO Standard Steel			$ 183	$ -
	Hold Down Kits			**LIST PRICE**	**EXTENDED**
	Dump body hold down kit (ratchet strap)			$ 476	$ -
	Dump body hold down kit (ratchet chain binders)			$ 625	$ -
	Dump body hold down kit (chain binders)			$ 427	$ -
	Dump body hold down kit (basic chain)			$ 293	$ -
	Trunnion Tailgate Latch for dump body (mild)			$ 271	$ -
	Cabshields			**LIST PRICE**	**EXTENDED**
	58" to 62" cab height (mild steel)			$ 671	$ -
	64" to 70" cab height (mild steel)			$ 695	$ -
	58" to 62" cab height (stainless steel)			$ 1,346	$ -
	64" to 70" cab height (stainless steel)			$ 1,398	$ -
	Ladders			**LIST PRICE**	**EXTENDED**
	Rear mount ladder, installed (mild steel)			$ 555	$ -
	Rear mount ladder, installed (stainless steel)			$ 1,061	$ -
	Side mount ladder for frame kit only, installed (mild)			$ 555	$ -
	Side mount ladder for frame kit only, installed (stainless)			$ 1,053	$ -
	Misc			**LIST PRICE**	**EXTENDED**
	Rubber side shields, installed	*Body Length*		0	$ -
	Metal spill shield, front or rear	Material Type	**Install Location**	**N/a**	$ -
	Rear bumper (mild) shipped loose			$ 518	$ -
	Spacer Bars, installed			$ 366	$ -

	18 HP Engine/Pump/Tank/Group (not available on 15' and 16' chain spreaders) (Not available with Auger Option			$ 6,366	$ -
	Spreader Stands			**LIST PRICE**	**EXTENDED**
	IS bolt-on stand (mild steel, installed)			$ 3,329	$ -
	IS bolt-on stand (stainless steel, installed)			$ 5,489	$ -
	HD Tube Stand - Mild Steel, installed	*Body Length*		0	$ -
	Paint			**LIST PRICE**	**EXTENDED**
	Highway Yellow paint ILO Orange (mild steel units only)	*Body Length*		0	$ -

Customer Name	0
	0
Contact Ph.	0
PO #	0
Date	1/0/1900

SUBTOTAL (ALL FSH III CHOICE PICKS)	$ -	**(EA Unit)**
UNIT QUANTITY		
TOTAL (LIST)	$ -	**Total**

Effective December 2016

Price includes installation, freight, hoses, and quick disconects to the rear.

HENDERSON TAILGATE SPREADER
PRICE LIST

FEATURES:

- All hydraulic drive.
- 6" bi-directional flight auger.
- 9" continuous flight auger.
- 3/8" auger flighting.
- 18" polyurethane spinner.
- Hydraulic Safety Interlock
- Self leveling spinner does not require stabilizer bar
- Anti flow plate.

SELECT (X)	AUGER SIZE	DRIVE SYSTEM	STEEL TYPE	LIST PRICE	EXTENDED
	6 in.	Direct Drive	Mild	$ 4,319	$ -

	Henderson Tgs Options	LIST PRICE	EXTENDED
	Spinner Support Kit	$ 94	$ -
	Adjustable baffle to direct spreader	$ 89	$ -
	Center discharge, 6" units only	$ 291	$ -
[redacted]			$ -
			$ -
	Motor with integral speed sensor	$ 322	$ -

Customer Name	0
	0
Contact Ph.	0
PO #	0
Date	1/0/1900

SUBTOTAL (ALL TGS CHOICE PICKS)	$ -	(EA Unit)
UNIT QUANTITY	0	
TOTAL (LIST)	$ -	Total

Effective December 2016

HENDERSON FIRST RESPONSE SPREADER/ANTI-ICE/PRE-WETTING SYSTEM
PRICE LIST

INCLUDES INSTALLATION, REQUIRED HYDRAULICS AND DICKEY-JOHN CONTROL POINT OR CERTIFED POWER XDS CONTROL SYSTEM TO OPERATE FUNCTIONS

Body:

- Inside top granular hopper width 72”
- 82” outside width for maximum liquid capacity
- 10 gauge 304 SS sides and ends
- All hardware is stainless steel
- Continuous welded on the inside and outside of the body
- ¼” x 2” formed 304SS plate lift hooks on each corner.
- Enhanced liquid capacity equals 100 gal. per linear foot of body
- Granular capacity equals .58 cu.yd. per linear foot of hopper length
- 7 gauge 304SS dual auger trough
- 304 stainless steel rear cabinet with 3 access doors houses all anti-icing/pre-wetting/hydraulic components
- 3/8” rod on 3/8” rod top grate screens with anti-seize hinges.
- Hydraulic safety interlock auger shut-off system.
- 7” diameter variable pitch dual augers, counter rotating conveyor system.
- 24.7 CIR hydraulic motor directly coupled to a 3.6:1 planetary gearbox, one for each auger
- Polyurethane hub at both ends of both augers eliminates seizing and ensures ease of maintenance
- Spinner has 4 position telescopic adjustments
- Quick latch spinner bypass chute.
- 20” polyurethane spinner disk
- All metal surfaces are high pressure cleaned with a phosphate solution.
- Non-stainless steel parts are painted black.

Anti-ice System:

- Selector valve switches the hydraulic flow between the augers and the high flow anti-ice pump
- Anti-ice high volume pump rated at 210 GPM with maximum pressure of 140 PSI driven by a high speed, low torque motor
- Anti-ice high volume flow meter rated for flows up to 198 GPM
- Individual solenoids allows independent controls for 1, 2, or 3 lane applications
- Each lane utilizes 4 variable displacement orifices for greatly extended application speed ranges

Pre-wetting System:

- Hydraulic pre-wet system powered by dedicated control valve with flow meter feedback
- Pre-wet low pump rated at 8.2 GPM and is driven by 1.21 CIR geroler type hydraulic motor for pre-wet system
- Pre-wetting Stainless Steel Slurry Tube allows for extended application range
- Manual adjustable flow divider controls exhaust oil to adjust pre-wet to granular ratio

Electrical System/Lighting:

- Combination stop/turn/tail and a three (3) light cluster terminates in a weather pack connector
- All valves, solenoids, and flow meters terminate with a weather pack connector.

	Length		Capacity		Weight	Width	Mounting Requirements			
SELECT (X)	Hopper/Res	Overall	Granular (cu.yd)	Liquid (Gal.)	Approx.	Outside	Chassis (CA/CT)	Slip-In Mount	LIST PRICE	EXTENDED
	9'	10' 5"	5.2	900	4100	82"	72" C/A	108" Clear	$ 79,414	$ -
	10'	11' 5"	5.8	1000	4400	82"	82" C/A	120" Clear	$ 80,395	$ -
	11'	12' 5"	6.4	1100	4700	82"	96" C/A	132" Clear	$ 81,416	$ -
	12'	13' 5"	7	1200	5000	82"	108" C/A	144" Clear	$ 82,436	$ -
	13'	14' 5"	7.5	1300	5300	82"	96" C/T	156" Clear	$ 83,457	$ -
	14'	15' 5"	8.1	1400	5600	82"	108" C/T	168" Clear	$ 85,442	$ -
	15'	16' 5"	8.7	1500	5900	82"	120" C/T	180" Clear	$ 86,455	$ -

	FRS UPGRADES	LIST PRICE	EXTENDED
	LED Lights in lieu of standard incandescent	$ 220	$ -
	One extra light hole in rear cabinent	$ 79	$ -
	Back-up lights	$ 79	$ -
	Heavy Duty top grate screens ILO standard duty, installed		$ -
	Self/storage leg stand (for slip in mount)		$ -

Customer Name	0
	0
Contact Ph.	0
PO #	0
Date	1/0/1900

SUBTOTAL (ALL FRS CHOICE PICKS)	$ -	(EA Unit)
BODY QUANTITY	0	
TOTAL (LIST)	$ -	Total

Effective December 2016

DIRECT CAST - HIGH TECH SPINNER APPLICATION SYSTEM
PRICE LIST

* CONTROLLED APPLICATION OF SALT TO THE CORRECT LOCATION ON THE ROAD SURFACE
* SALT PATTERN IS ADJUSTABLE IN THE CAB OF THE TRUCK
* ALL STAINLESS STEEL CONSTRUCTION
* UNIT REPLACES SPINNER FOR CONTROLLED SPREAD WIDTH APPLICATION
* ASSEMBLY HYDRAULICALLY MOVES LEFT / RIGHT FOR CONTROL OF SPREAD APPLICATION
* FEEDBACK SENSORS FOR RPM & LOCATION OF MATERIAL ON THE SPINNER
* IN CAB CONTROLLER FOR CONTROL AND MONITORING OF SPINNER POSITION
* INCLUDES HYDRAULICS REQUIRED FOR OPERATION. (Note: Certified Power XDS Control can operate system in lieu of standard Henderson in-cab controller)

SELECT (X)		LIST PRICE	EXTENDED
	Henderson Direct Cast (operates with Munibody, Blackbelt Maxx, and Spreader Products	$ 10,360	$ -

** If being sold (at the same time) as a FSH or Munibody, Call for FSH or Muni Chute Deduct price.

Customer Name	0
	0
Contact Ph.	0
PO #	0
Date	1/0/1900

SUBTOTAL (ALL DCAST CHOICE PICKS)	$ -	(EA Unit)
UNIT QUANTITY	0	
TOTAL (LIST)	$ -	Total

Effective December 2016

HENDERSON LIQUID PREWET SYSTEM (HYDRAULIC OR ELECTRIC)
PRICE LIST

FEATURES: ELECTRIC DRIVE

- Simple bolt-on installation.
- 12 volt DC electric motor/pump combination drive system.
- Three chamber diaphragm pump with internal circuit breaker.
- Rated up to 3 GPM.
- Drive system completely enclosed by a molded fiberglass housing with a sealed hinged lid.
- Cab mounted console with variable speed pump control, high pressure and tank empty indicator lights with audible alarm.
- One tank (for size / type, see below).
- Bulk tank fill quick couplings supplied.
- Replaceable in-line screen strainer.
- Brass shut-off valves.
- Hardware, hoses, fittings, sealed wiring harness, and mounting brackets included.
- Variable displacement orifice provides extended range of output and eliminates clogging associated with conventional nozzles

FEATURES: HYDRAULIC DRIVE

- System maintains the proportion of liquid to granular material throughout normal spreader application rates.
- 4.1 GPM @ 1725 RPM gear pump drive system.
- Hydraulic drive motor is 1.21 CIR geroler type
- Drive system completely enclosed by a molded fiberglass housing with a sealed hinged lid.
- An inline adjustable flow divider valve allows for changes in the ratio of pre-wet solution to granular material.
- Cab mounted console includes on/off switch with power on indicator and tank empty indicator lights with audible alarm.
- One tank (for size / type, see below)
- Bulk tank fill quick couplings supplied.
- Replaceable in-line screen strainer.
- Brass shut-off valves.
- Hardware, hoses, fittings, sealed wiring harness, and mounting brackets included.
- Simple bolt-on installation.
- Variable displacement orifice provides extended range of output and eliminates clogging associated with conventional nozzles

SELECT (X)	BODY TYPE	UNIT LENGTH	PREWET SIZE	PREWET DRIVE	LIST PRICE	EXTENDED
	Prewet for dump body tailgate mount	Standard Dump	75 Gallon	*Electric*	$ 2,762	$ -
	Prewet for FSH V-box spreader	FSH_8FT	Single 75 Gallon	*Electric*	$ 2,048	$ -
	Prewet for 22DEG Munibody**	MB22_9FT	Single 75 Gallon	*Electric*	$ 2,770	$ -
	Prewet for 35deg Munibody**	MB35_11FT	Dual 165 Gallon	*Electric*	$ 4,872	$ -
	Prewet for Blackbelt Maxx	BBMAXX_11FT	Dual 155 Gallon	*Electric*	$ 7,162	$ -
	Prewet for dump body tailgate mount	Standard Dump	75 Gallon	*Hydraulic*	$ 4,076	$ -
	Prewet for FSH V-box spreader	FSH_8FT	Single 75 Gallon	*Hydraulic*	$ 3,682	$ -
	Prewet for 22DEG Munibody**	MB22_10FT	Single 75 Gallon	*Hydraulic*	$ 4,001	$ -
	Prewet for 35deg Munibody**	MB35_11FT	Dual 165 Gallon	*Hydraulic*	$ 6,103	$ -
	Prewet for Blackbelt Maxx	BBMAXX_11FT	Dual 155 Gallon	*Hydraulic*	$ 8,512	$ -

**Requires platform fender option.
V-Box & Munibody RESERVOIR OPTIONS: Price includes reservoir(s), control, installation, plumbing, nozzles and electric or hydraulic pump power unit
Blackbelt Maxx RESERVOIR OPTIONS: Price includes reservoir(s), control, installation, plumbing, nozzles and electric or hydraulic pump power unit

	Prewet Add-On's	LIST PRICE	EXTENDED
	304ss Mounting hardware for TGS or FSH prewet kits ILO Mild	$ 712	$ -
	Dickey-John/Certified Power flowmeter, installed, in pump assembly (required for liquid control) (Electric Drive Prewet Only)	$ 610	$ -
	System Flush Kit	$ 101	$ -
	Automoatic Shut-off switch	$ 448	$ -
	Dickey-John/Certified Power flowmeter and hydraulic control valve (required for liquid control) (Hydraulic Drive Prewet Only)	$ 1,332	$ -
	8.2 GPM liquid pump for higher flow liquid aplication rates (Hydraulic Drive Prewets Only)	$ 155	$ -
	Stainless Steel Slurry Tube for BBMAXX, Dual Auger Munibody, or Dual Auger Vbox spreader, (includes 8.2GPM Pump) (Hydraulic Prewets Only)	$ 1,041	$ -
	Stainless Steel Slurry Tube for Tailgate spreader application (includes 8.2GPM Pump) (Hydraulic Drive Prewets Only)	$ 948	$ -

Customer Name	0
	0
Contact Ph.	0
PO #	0
Date	1/0/1900

SUBTOTAL (ALL PWS CHOICE PICKS)	$ -	(EA Unit)
BODY QUANTITY	0	
TOTAL (LIST)	$ -	Total

Effective December 2016

LAS - LIQUID APPLICATION SYSTEM (ANTI-ICING)
PRICE LIST

Stainless steel three lane boom standard.
Painted frame slips easily into a dump body and includes tailgate latch bar (optional front and side wheel guides).
Glass filled polypropylene fittings standard for good resistance to corrosion and impact.
Manifold style fittings for ease of service.
3-way valve standard for self filling of unit.
Clip-on nozzle bodies with brass 24 gal/lane tips (stainless steel tips and/or 32 gal/lane tips optional).
Standard 1235 gallon elliptical leg tank, (options available for standard and heavy wall 1635 or 1800 gallon tanks).
UTILIZES DICKEY-JOHN CONTROL POINT OR CERTIFIED POWER XDS SYSTEM (MUST ADD TO PRICE OF SYSTEM FROM INSTALLATION OPTIONS).
**** Unit includes flowmeter and mild steel trunnion latch bar.**

MUST ADD DICKEY-JOHN CONTROL POINT OR CERTIFED POWER XDS SYSTEM TO LIST PRICE FOR THIS PRODUCT

SELECT (X)	LAS SYSTEM			LIST PRICE	EXTENDED
	1235 Gallon Anti-Icing System: Includes 1235g elliptical leg tank, galvanized hoop kit, painted frame, 3 lane boom, 24GPM nozzles tips.			$ 19,200	$ -
	**Unit Priced Installed				
	Tank Options			**LIST PRICE**	**EXTENDED**
	1635 Gallon standard wall elliptical leg tank (galvanized hoop kit) In Lieu of Standard 1235			$ 1,029	
	1635 Gallon Heavy wall elliptical leg tank (galvanized hoop kit) In Lieu of Standard 1235			$ 1,296	
	1800 Gallon standard wall elliptical leg tank (consists of dual 900g tanks, painted hoop kit) In Lieu of Standard 1235			$ 534	
	1800 GallonHeavy wall elliptical leg tank (consists of dual 900g tanks, painted hoop kit) In Lieu of Standard 1235			$ 991	
	Boom Options				
	3 lane liquid boom only with liquid pump/flowmeter)for V-Box and Blackbelt Maxx Tiquid Tanks			$ 6,222	
	Brass Nozzle Tips - 32 gallon per lane capacity			**No Charge**	
	Stainless Steel nozzle tipe - 24 gallon per lane capacity			$ 107	
	Stainless Steel nozzle tipe - 32 gallon per lane capacity			$ 107	
	Single land boom (center land application only) In Lieu of standard 3-lane			$ (921)	
	Frame Options				
	304 Stainless Steel Frame			$ 3,754	
	Wheel Guide Kit (Painted Frame)			$ 268	
	Wheel Guide Kit (304 Stainless Steel Frame)			$ 558	
	Leg Kit (Painted – self actuating, to support empty unit only)			$ 1,048	
	Leg Kit (304 Stainless Steel – self actuating, to support empty unit only)			$ 2,146	
	Ladder Kit (Painted)			$ 575	
	Ladder Kit (304 Stainless Steel)			$ 1,031	
	Lift Frame Kit (Painted)			$ 622	
	Lift Frame Kit (304 Stainless Steel)			$ 2,449	
	Misc Options				
	Stainless Steel Hoop Kit – 1800 Gal Tank (in lieu of std Painted Hoops)			$ 1,371	
	Hose Reel Kit			$ 1,791	
	Fluid Level Kit			$ 150	
	Surgebuster (requires approx. 1 ball per 30 gallons tank capacity)	**Select LAS Size**	Select		

MUST ADD DICKEY-JOHN CONTROL POINT OR CERTIFED POWER XDS SYSTEM TO LIST PRICE FOR THIS PRODUCT
See Truck Hitch Tab for Control Options.

Customer Name	0
	0
Contact Ph.	0
PO #	0
Date	1/0/1900

SUBTOTAL (ALL LAS CHOICE PICKS)	$ -
UNIT QUANTITY	0
TOTAL (LIST)	$ -

Effective December 2016

BrineXTREME PRO
PRICE LIST

FEATURES:

Brine Production
- Continuous - up to 6,000 GPH
- 100% Automated brine production
- Side flow design
- Handles all salt types (treated or untreated)

Salt Concentration Measuring
- 100% Automated
- Density Meter - accurate to .001 SG

Salt Hopper
- 4.67 cu.yd capacity
- Dimensions: 132" L x 63" H x 36" W
- Splash free brine transfer
- Dual overflow protection built in

Clean Out
- Easy clean out
- Large solids - 15" W x 9" H quick-latch removable panel
- Fines - 3" butterfly valve for fresh water flush
- Sloped Floor

Salinity Control
- 100% Automated Salinity Control
- 6" LCD touch screen
- Data logging
- Storage tank level monitoring
- Built-in self diagnostics
- UL listed design
- Remote Access (optional)
- Remote Truck Fill (optional)

Construction & Components
- Tanks- stainless steel w/ v-crimps, boosting structural strength
- Valves: electric actuated (24v DC)
- Motor: industrial grade 3 HP, 230v single pgase
- Pump: cast stainless - 110 GPM
- Pump Design: pedestal
- Self-containted design
- Mechanicals: protected
- Forklift Pockets: built-in

Dimensions & Weight
- Footprint: 159" L x 63" H x 59" W
- Weight: 2,500 lbs.

Warranty
- 1-year

ALL PRICING IS BASED ON CUSTOMER SELF INSTALLATION. FACTORY INSTALLATION AVAILABLE, PLEASE CONTACT HENDERSON PRODUCTS FOR MORE INFORMATION

SELECT (X)	BXT PRO SYSTEM	LIST PRICE	EXTENDED
	BrineXtreme Pro - Non Installed, (Includes Cellular Gateway)	$ 39,538	$ -

	BXT Pro Options	LIST PRICE	EXTENDED
	Hinged Hopper Cover (flip lid)	$ 2,231	

Customer Name	0
	0
Contact Ph.	0
PO #	0
Date	1/0/1900

SUBTOTAL (ALL BXT PRO CHOICE PICKS)	$ -	(EA Unit)
UNIT QUANTITY		
TOTAL (LIST)	$ -	Total

Effective December 2016

BrineXTREME MOBILE TRAILER
PRICE LIST

FEATURES:

- Trailer Dimensions - 8' wide by 21' long (not including hitch)
- Trailer Weights - Approx 6,000 lbs
- Tank Construction - 10ga stainless steel (hopper and frame)
- Trailer Capacity - 5 cu.yd
- Clean Out of Fines - Fresh water flush
- NEMA 4x Cabinet - salinity control and truck fill station
- Salinity Control Monitor - 10.4" color TFT touch screen
- Truck Fill Station (optional)
- Truck Fill Panel - Interactive LCD screen with key pad entry
- Blending Module - Optional for blending a single additive

ALL PRICING IS BASED ON CUSTOMER SELF INSTALLATION. FACTORY INSTALLATION AVAILABLE, PLEASE CONTACT HENDERSON PRODUCTS FOR MORE INFORMATION

SELECT (X)	BXT MOBILE TRAILER	LIST PRICE	EXTENDED
	V-NOSE TRAILER	$ 113,191	$ -
	STD Base Features: Salinity Control System	Incl	
	STD Base Feature: Flow Rate (100GPM)	Incl	
	STD Base Feature: Electrical Service (208/220v 3 phase)	Incl	
	STD Base Feature: Orientation (Left)	Incl	
	STD Base Feature: Truck Fill Points (None)	Incl	
	STD Base Feature: Brine Maker Heat (None)	Incl	
	Salinity Control Options:		
	STD Base Feature: Water Supply Flow Meter Kit (None)	Incl	
	STD Base Feature: Cellular Gateway (Included)	Incl	
	STD Base Feature: Micro Ingrediant Pump (None)	Incl	
	STD Base Feature: Brine Maker Included (Yes)	Incl	
	STD Base Feature: Material: (Stainless Steel)	Incl	
	STD Base Feature: Discharge End: (Left Side)	Incl	
	STD Base Feature: Auger Motor (110v, single phase, 60hz)	Incl	

x	BXT Pro Upgrade Options	LIST PRICE	EXTENDED
	Salinity Control Options:		
	Flow Rate (200 GPM ILO 100 GPM)	$ 1,112	$ -
	Electric Service (208/220v Single Phase) ILO 208/220v 3 phase	$ 751	$ -
	Electric Service (575v 3 phase) ILO 208/220v 3 phase	$ 556	$ -
	Electric Service (460v 3 phase 60hz) ILO 208/220v 3 phase	$ 278	$ -
	Truck Fill Points (1)	$ 8,302	$ -
	Brine Maker Heat (YES)	$ 1,437	$ -
x	**Salinity Control Options:**		
x	Air Purge (YES)	$ 486	$ -
	Water Supply Flow Meter Kit (YES)	$ 1,837	$ -
	Micro Ingrediant Pump (YES)	$ 1,437	$ -
x	**Brine Maker:**		
x	Self Cleaning (YES)	$ 11,954	$ -
	Brine Maker Options:		
	Roll Tarp	$ 2,392	$ -
	Extra Options:		
	Compressor (YES)	$ 1,876	$ -
	Generator (YES)	$ 6,427	$ -
	Air Conditioning (YES)	$ 2,595	$ -
	Hinged Hopper Cover (flip lid)	$ 2,231	$ -

Customer Name	0
	0
Contact Ph.	0
PO #	0
Date	1/0/1900

SUBTOTAL (ALL BXT MOBILE CHOICE PICKS)	$ -	**(EA Unit)**
UNIT QUANTITY	0	
TOTAL (LIST)	$ -	**Total**

Effective December 2016

BrineXTREME ULTIMATE
PRICE LIST

FEATURES:

Brine Maker (if equiped)

- Dimensions: 58"D x 126"W x 78"H
- Construction: 10ga 304 stainless steel hopper and frame
- Polypropylene auger for clean out of large solids, fully automated when paired with salinity control
- Capacity: 5cy.yds with 8cu.yd upgrade option
- Production Rates: Up to 9,600 GPM
- Mid-flow down design

Salinity Control

- Dimensions: 27"d x 115"W x 53"H
- Modular, stand alone or retrofit to existing equipment
- Salt Density measurement accurate to .001 SG
- Production Rates up to 160 GPM
- Total automation of salinity, salt tank, blending, and brine tank levels
- NEMA 4x cabinet

Blending System (if equpped)

- Dimensions: 27"D x 147"W x 65"H
- 10.4" Color TFT touch screen
- Variable Flow Rates
- Blends brine with up to 4 additives
- Blends brine with up to (3) micro ingredients
- Fills up to (3) trucks simultaneously using interactive LCD screen
- NEMA 4x cabinet

ALL PRICING IS BASED ON CUSTOMER SELF INSTALLATION. FACTORY INSTALLATION AVAILABLE, PLEASE CONTACT HENDERSON PRODUCTS FOR MORE INFORMATION

SELECT (X)	SALINITY CONTROL SYSTEM			LIST PRICE	EXTENDED
	STD Base Features: Salinity Control System			$ 39,086	$ -
	STD Base Feature: Flow Rate (100GPM)			Incl	
	STD Base Feature: Motor (208/220v 3 phase)			Incl	
	STD Base Feature: Orientation (Left or Right)	Orientation (select)		Incl	
	STD Base Feature: Truck Fill Points (None)			Incl	
	STD Base Feature: Cellular Gateway (Included)			Incl	
	STD Base Features: Brine Maker			Incl	
	STD Base Feature: Brine Maker Included (NO)			Incl	
	STD Base Feature: Brine Maker Leg Extension (NO)			Incl	
	STD Base Feature: Roll Tarp (NO)			Incl	
	STD Base Feature: Brine Maker Hopper Extension (NO)			Incl	
	STD Base Feature: Brine Maker Heat (None)			Incl	

	BXT Pro Upgrade Options	LIST PRICE	EXTENDED
	Salinity Control Options:		
	Flow Rate (200 GPM ILO 100 GPM)	$ 1,112	$ -
	Flow Rate (300 GPM ILO 100 GPM)	$ 2,091	$ -
	Electric Service (208/220v Single Phase) ILO 208/220v 3 phase	$ 751	$ -
	Electric Service (460v 3 phase 60hz) ILO 208/220v 3 phase	$ 278	$ -
	Electric Service (575v 3 phase) ILO 208/220v 3 phase	$ 556	$ -
	Truck Fill Points (1)	$ 8,302	$ -
	Truck Fill Points (2)	$ 15,712	$ -
	Truck Fill Points (3)	$ 23,834	$ -
	No Fill Points (with agitation)	No Charge	$ -
	Warning Beacon (yes)	$ 304	$ -
	Air Purge Kit	$ 486	$ -
	Recycled Water	$ 1,264	$ -
	Water Supply Flow Meter	$ 1,837	$ -
	Micro Ingredient Pump	$ 595	$ -
	Brine Maker Options:		
	Stainless Steel Brine Maker (Yes)	$ 26,674	$ -
			$ -
			$ -
			$ -
			$ -
			$ -
			$ -
	Add-on Module 1:		
	Add-On Module One (YES)	$ 16,744	$ -
			$ -
			$ -
			$ -
			$ -
			$ -
			$ -
			$ -
			$ -

[redacted]			$ -
[redacted]			$ -
[redacted]			$ -
[redacted]			$ -
[redacted]			$ -
	Add-on Module 2:		
	Add-On Module Two (YES)	$ 16,744	$ -
[redacted]			$ -
[redacted]			$ -
[redacted]			$ -
[redacted]			$ -
[redacted]			$ -
[redacted]			$ -
[redacted]			$ -
[redacted]			$ -
[redacted]			$ -
[redacted]			$ -
[redacted]			$ -
[redacted]			$ -
[redacted]			$ -
	Add-on Module 3:		
	Add-On Module 3 (YES)	$ 16,744	$ -
[redacted]			$ -
[redacted]			$ -
[redacted]			$ -
[redacted]			$ -
[redacted]			$ -
[redacted]			$ -
[redacted]			$ -
[redacted]			$ -
[redacted]			$ -
[redacted]			$ -
[redacted]			$ -
[redacted]			$ -
[redacted]			$ -
	Add-on Module 4:		
	Add-On Module 4 (YES)	$ 16,744	$ -
[redacted]			$ -
[redacted]			$ -
[redacted]			$ -
[redacted]			$ -
[redacted]			$ -
[redacted]			$ -
[redacted]			$ -
[redacted]			$ -
[redacted]			$ -
[redacted]			$ -
[redacted]			$ -
[redacted]			$ -
[redacted]			$ -

Customer Name	0
	0
Contact Ph.	0
PO #	0
Date	1/0/1900

SUBTOTAL (ALL BXT ULTIMATE CHOICE PICKS)	$ -	**(EA Unit)**
UNIT QUANTITY	0	
TOTAL (LIST)	$ -	**Total**

Effective December 2016

BrineXTREME Truck Fill Pro
PRICE LIST

FEATURES:

- Standalone filling station
- Modular design
- Plug-n-play installation
- Password protection
- Multiple user setup
- Data logging
- Optional blending of up to three products

Dimensions & Weight

- Footprint: 56" W x 66" H x 28" D
- Weight: 580 lbs.

Construction

- Stainless steel frame
- 3hp, 18 amp, 208/240v single phase motor
- Cast stainless steel pedestal pump
- IP67 rated electric valves
- Fill rate of 100 or 200 GPM
- Solid state magmeter flowmeter
- NEMA 4x cabinet
- LCD touch screen
- Numeric Keypad
- 2" Camlock connections
- 2" UL Listed

Warranty

- 1-year

ALL PRICING IS BASED ON CUSTOMER SELF INSTALLATION. FACTORY INSTALLATION AVAILABLE, PLEASE CONTACT HENDERSON PRODUCTS FOR MORE INFORMATION

SELECT (X)	BXT TFP SYSTEM	LIST PRICE	EXTENDED
	BrineXtreme Truck Fill Pro (Single valve, Draws from (1) source - Non Installed	$ 17,056	$ -
	BrineXtreme Truck Fill Pro (Dual valve, Draws from (2) sources - Non Installed	$ 18,199	$ -
	BrineXtreme Truck Fill Pro (Triple valve, Draws from (3) sources - Non Installed	$ 19,343	$ -

	BXT TFP Options			LIST PRICE	EXTENDED
	Truck Offload - Powered return from truck to storage			$ 1,143	
	Cellular Gateway (includes 1st year of service)	Service Location	United States	$ 1,716	

Customer Name	0
	0
Contact Ph.	0
PO #	0
Date	1/0/1900

SUBTOTAL (ALL BXT PRO CHOICE PICKS)	$ -	(EA Unit)
UNIT QUANTITY	0	
TOTAL (LIST)	$ -	Total

HENDERSON

PRODUCTS, INC.

1085 SOUTH THIRD STREET
PO BOX 40, MANCHESTER, IA 52057-0040
PHONE: 563-927-2828

SALES QUOTATION

DATE	PAGE
12/12/2016	1

CUSTOMER: Knapheide Truck Equipment Co.
CONTACT: Jim Fountain
ADDRESS: 1200 South Averill Avenue
Flint, Michigan USA 48503

PHONE: 810-762-0755
FAX: 855-629-4643
EMAIL: jfountain@knapheide.com

QUOTE ID: 93052-4
QUOTE DATE: 12/12/2016
VALID UNTIL: 1/11/2017

SALESPERSON: James Fountain
PHONE: 810-762-1100
FAX: 855-629-4643
EMAIL: jfountain@knapheide.com

QUANTITY	DESCRIPTION	LIST PRICE EACH	EXT. LIST PRICE
	QUOTE 93052-4: MDOT		
1	CONFIGURATION 1-1: MUNIBody II multi-task body		
		$39,230.00	$39,230.00
	0% Discount:	$0.00	$0.00
	Dealer Cost:	$39,230.00	$39,230.00
	DESCRIPTION: MUNI Rear discharge only External with 60" headsheet 10' / 11' body length, 36" sides, 48" tailgate		
	Conveyor Discharge		
	Discharge Options: **Rear discharge only**		
	Body Size / Style		
	Doghouse Type: **External with 60" headsheet**		
	Body Length: **10' / 11' body length, 36" sides, 48" tailgate**	$20,461.00	$20,461.00
	Side Height: **36" High Sides with pockets for 12" boards**		
	Side to Floor Transition: **35 Degree Slope from Horizontal on Sides**		
	Tailgate/Rear Body Style: **Standard Rear Discharge Apron 48" Tailgate**		
	Body Capacity		
	Granular Capacity: **6.0 yd Sides 8.9 yd Ends**		
	Cabshield		
	Cabshield: **Yes**		
	Body Material/Construction		
	Sides / Ends: **Optional 304SS sides, ends**	$8,937.00	$8,937.00
	Floor: **1/4" AR400**		
	Cabshield		
	Cabshield Material: **10 ga. with 7 ga. endplates, Stainless Steel**		
	Cabshield Size: **16" X 78" (1/4 cab) 304SS**	$820.00	$820.00
	Body Material/Construction		
	Rear Apron / Bolsters: **304 Stainless Steel**	$751.00	$751.00
	Tailgate Bracing: **304 Stainless Steel**	$418.00	$418.00
	Sideboards		
	Sloped Steel Sideboards: **Yes**		

HENDERSON

PRODUCTS, INC.

1085 SOUTH THIRD STREET
PO BOX 40, MANCHESTER, IA 52057-0040
PHONE: 563-927-2828

SALES QUOTATION

DATE	PAGE
12/12/2016	2

CUSTOMER: Knapheide Truck Equipment Co.
CONTACT: Jim Fountain
ADDRESS: 1200 South Averill Avenue
Flint, Michigan USA 48503

PHONE: 810-762-0755
FAX: 855-629-4643
EMAIL: jfountain@knapheide.com

QUOTE ID: 93052-4
QUOTE DATE: 12/12/2016
VALID UNTIL: 1/11/2017

SALESPERSON: James Fountain
PHONE: 810-762-1100
FAX: 855-629-4643
EMAIL: jfountain@knapheide.com

QUANTITY	DESCRIPTION	LIST PRICE EACH	EXT. LIST PRICE
	Sideboard Material: **10 ga. 304 SS**	$1,638.00	$1,638.00
	Install Sideboards: **Yes, bolted in**	$331.00	$331.00
	Conveyor Options		
	Conveyor Motor with Integral Speed Sensor: **Yes**	$473.00	$473.00
	Conveyor Motor and Gearcase Location: **Rear Mounted Motor and Gearcase**		
	Double Conveyor Cross Bars: **Yes**	$733.00	$733.00
	3/16" AR 400 Steel Conveyor Cover: **Yes, shipped loose**	$684.00	$684.00
	Conveyor Chain Oiling System: **Yes**	$203.00	$203.00
	Hydraulic Reservoir: **None, deduct from price**	($492.00)	($492.00)
	Side Ladder		
	Fold-up Side Ladder: **Yes**		
	Ladder Material: **10 ga. 304 SS**	$647.00	$647.00
	Spinner & Chute Options		
	Polyurethane spinner disk: **Yes**	$147.00	$147.00
	Spinner / Chute / Asphalt Pan Options: **Rear asphalt pathcing pan only, GR50**	$174.00	$174.00
	Underbody Pans, 304 SS: **Yes**	$507.00	$507.00
	Lighting		
	Lighting Package: **LED lights**	$199.00	$199.00
	Extra Light Holes in Rear Bolster: **Two extra light holes in each bolster**	$147.00	$147.00
	Fenders		
	Drivers Side Fender: **Platform Fenders for Toolbox or Tanks**		
	Passengers Side Fender: **Platform Fenders for Toolbox or Tanks**		
	Pre-wet Tanks		
	Drivers Side Fender Accessory: **165 gallon poly tank (93.5 in long)**	$1,226.00	$1,226.00
	Special Fender Options		
	Special Fender Options - Drivers Side: **None needed**		
	Pre-wet Tanks		
	Passengers Side Fender Accessory: **165 gallon poly tank (93.5 in long)**	$1,226.00	$1,226.00

HENDERSON

PRODUCTS, INC.

1085 SOUTH THIRD STREET
PO BOX 40, MANCHESTER, IA 52057-0040
PHONE: 563-927-2828

SALES QUOTATION

DATE	PAGE
12/12/2016	3

CUSTOMER: Knapheide Truck Equipment Co.
CONTACT: Jim Fountain
ADDRESS: 1200 South Averill Avenue
Flint, Michigan USA 48503

PHONE: 810-762-0755
FAX: 855-629-4643
EMAIL: jfountain@knapheide.com

QUOTE ID: 93052-4
QUOTE DATE: 12/12/2016
VALID UNTIL: 1/11/2017

SALESPERSON: James Fountain
PHONE: 810-762-1100
FAX: 855-629-4643
EMAIL: jfountain@knapheide.com

QUANTITY	DESCRIPTION	LIST PRICE EACH	EXT. LIST PRICE
	Special Fender Options Special Fender Options - Passengers Side: **None needed** End Customer: MDOT		

Quote Total:	$39,230.00
0% Discount:	$0.00
0% Sales Tax:	$0.00
Total Dealer Cost:	$39,230.00

HENDERSON

PRODUCTS, INC.

1085 SOUTH THIRD STREET
PO BOX 40, MANCHESTER, IA 52057-0040
PHONE: 563-927-2828

SALES QUOTATION

DATE	PAGE
12/12/2016	1

CUSTOMER: Knapheide Truck Equipment Co.
CONTACT: Jim Fountain
ADDRESS: 1200 South Averill Avenue
Flint, Michigan USA 48503

PHONE: 810-762-0755
FAX: 855-629-4643
EMAIL: jfountain@knapheide.com

QUOTE ID: 93053-4
QUOTE DATE: 12/12/2016
VALID UNTIL: 1/11/2017

SALESPERSON: James Fountain
PHONE: 810-762-1100
FAX: 855-629-4643
EMAIL: jfountain@knapheide.com

QUANTITY	DESCRIPTION	LIST PRICE EACH	EXT. LIST PRICE
	QUOTE 93053-4: MDOT		
1	CONFIGURATION 1-1: MUNIBody II multi-task body		
		$47,501.00	$47,501.00
	0% Discount:	$0.00	$0.00
	Dealer Cost:	$47,501.00	$47,501.00
	DESCRIPTION: MUNI Rear discharge only External with 60" headsheet 13' / 14' body length, 36" sides, 48" tailgate		
	Conveyor Discharge		
	Discharge Options: **Rear discharge only**		
	Body Size / Style		
	Doghouse Type: **External with 60" headsheet**		
	Body Length: **13' / 14' body length, 36" sides, 48" tailgate**	$23,714.00	$23,714.00
	Side Height: **36" High Sides with pockets for 12" boards**		
	Side to Floor Transition: **35 Degree Slope from Horizontal on Sides**		
	Tailgate/Rear Body Style: **Standard Rear Discharge Apron 48" Tailgate**		
	Body Capacity		
	Granular Capacity: **7.8 yd Sides 11.6 yd Ends**		
	Cabshield		
	Cabshield: **Yes**		
	Body Material/Construction		
	Sides / Ends: **Optional 304SS sides, ends**	$11,248.00	$11,248.00
	Floor: **1/4" AR400**		
	Cabshield		
	Cabshield Material: **10 ga. with 7 ga. endplates, Stainless Steel**		
	Cabshield Size: **16" X 78" (1/4 cab) 304SS**	$820.00	$820.00
	Body Material/Construction		
	Rear Apron / Bolsters: **304 Stainless Steel**	$751.00	$751.00
	Tailgate Bracing: **304 Stainless Steel**	$418.00	$418.00
	Sideboards		
	Sloped Steel Sideboards: **Yes**		

HENDERSON

PRODUCTS, INC.

1085 SOUTH THIRD STREET
PO BOX 40, MANCHESTER, IA 52057-0040
PHONE: 563-927-2828

SALES QUOTATION

DATE	PAGE
12/12/2016	2

CUSTOMER: Knapheide Truck Equipment Co.
CONTACT: Jim Fountain
ADDRESS: 1200 South Averill Avenue
Flint, Michigan USA 48503

PHONE: 810-762-0755
FAX: 855-629-4643
EMAIL: jfountain@knapheide.com

QUOTE ID: 93053-4
QUOTE DATE: 12/12/2016
VALID UNTIL: 1/11/2017

SALESPERSON: James Fountain
PHONE: 810-762-1100
FAX: 855-629-4643
EMAIL: jfountain@knapheide.com

QUANTITY	DESCRIPTION	LIST PRICE EACH	EXT. LIST PRICE
	Sideboard Material: **10 ga. 304 SS**	$1,910.00	$1,910.00
	Install Sideboards: **Yes, bolted in**	$331.00	$331.00
	Conveyor Options		
	Conveyor Motor with Integral Speed Sensor: **Yes**	$473.00	$473.00
	Conveyor Motor and Gearcase Location: **Rear Mounted Motor and Gearcase**		
	Double Conveyor Cross Bars: **Yes**	$950.00	$950.00
	3/16" AR 400 Steel Conveyor Cover: **Yes, shipped loose**	$739.00	$739.00
	Conveyor Chain Oiling System: **Yes**	$203.00	$203.00
	Hydraulic Reservoir: **Cradle mount reservoir**		
	Side Ladder		
	Fold-up Side Ladder: **Yes**		
	Ladder Material: **10 ga. 304 SS**	$647.00	$647.00
	Spinner & Chute Options		
	Spinner / Chute / Asphalt Pan Options: **Rear asphalt pathcing pan with chute and mount, GR50**	$527.00	$527.00
	Underbody Pans, 304 SS: **Yes**	$722.00	$722.00
	Lighting		
	Lighting Package: **LED lights**	$199.00	$199.00
	Extra Light Holes in Rear Bolster: **Two extra light holes in each bolster**	$147.00	$147.00
	Fenders		
	Drivers Side Fender: **Platform Fenders for Toolbox or Tanks**		
	Passengers Side Fender: **Platform Fenders for Toolbox or Tanks**		
	Pre-wet Tanks		
	Drivers Side Fender Accessory: **230 gallon poly tank (129.5 in long)**	$1,851.00	$1,851.00
	Special Fender Options		
	Special Fender Options - Drivers Side: **None needed**		
	Pre-wet Tanks		
	Passengers Side Fender Accessory: **230 gallon poly tank (129.5 in long)**	$1,851.00	$1,851.00

HENDERSON

PRODUCTS, INC.

1085 SOUTH THIRD STREET
PO BOX 40, MANCHESTER, IA 52057-0040
PHONE: 563-927-2828

SALES QUOTATION

DATE	PAGE
12/12/2016	3

CUSTOMER: Knapheide Truck Equipment Co.
CONTACT: Jim Fountain
ADDRESS: 1200 South Averill Avenue
Flint, Michigan USA 48503

PHONE: 810-762-0755
FAX: 855-629-4643
EMAIL: jfountain@knapheide.com

QUOTE ID: 93053-4
QUOTE DATE: 12/12/2016
VALID UNTIL: 1/11/2017

SALESPERSON: James Fountain
PHONE: 810-762-1100
FAX: 855-629-4643
EMAIL: jfountain@knapheide.com

QUANTITY	DESCRIPTION	LIST PRICE EACH	EXT. LIST PRICE
	Special Fender Options Special Fender Options - Passengers Side: **None needed** End Customer: MDOT		

Quote Total:	$47,501.00
0% Discount:	$0.00
0% Sales Tax:	$0.00
Total Dealer Cost:	$47,501.00

Bench Press
Scissor Hoist
DEALER PRICE LIST

STANDARD FEATURES

- ***Bench Press*** series 'scissor hoist' only
- Single body prop built into hoist and is self-locking and self-storing
- Hoist is continuously welded
- Finite Element Analysis (FEA) enhanced design
- Mount pack includes all mounting hardware
- Rear pivot is 4" x 4" x 1/4" angle
- Single acting 12 VDC power pack (includes electric push button cab control)
- All cylinders have 2" chrome plated piston rods
- 3 models to choose from
  - BP-20 utilizes a 4.5" X 16" cylinder
  - BP-40 utilizes a 5.0" X 20" cylinder
  - BP-50 utilizes a 5.5" x 20" cylinder
- Operating pressure 3250 PSI

Type	Class (NTEA)	Body LENGTH	Hoist Capacity @ Overhang 6"	18"	30"	Approx Weight	LIST PRICE
BP-20	20	8'	8.1	11.3	18.9	354	$ 2,525
BP-20	20	9'	7.1	9.4	14.1	354	$ 2,525
BP-40	40	9'	12.3	16.4	24.6	406	$ 2,723
BP-40	40	10'	10.9	14.0	19.7	406	$ 2,723
BP-40	40	11'	9.8	12.3	16.4	406	$ 2,723
BP-40	40	14'	7.6	8.9	10.9	406	$ 2,723
BP-40	40	16'	6.6	7.6	8.9	406	$ 2,723
BP-50	50	9'	14.9	19.8	29.7	415	$ 2,838
BP-50	50	10'	13.2	17.0	23.8	415	$ 2,838
BP-50	50	11'	11.9	14.9	19.8	415	$ 2,838
BP-50	50	12'	10.8	13.2	17.0	415	$ 2,838
BP-50	50	14'	9.1	10.8	13.2	415	$ 2,838
BP-50	50	16'	7.9	9.1	10.8	415	$ 2,838

OPTION DESCRIPTION	SUGGESTED LIST PRICE
Double acting 12 VDC power pack (includes electric push button cab control) ----------	$ 116
Deduct single acting 12 VDC power pack and electric push button cab control----------	$ (-328)
6" x 4" x 3/8" angle with 2 1/2" hinge blocks and 1.5" dia. pins in lieu of std ----------	$ 173
B-T-F Pump Mounting Kit (for Non-subframe units only)----------	$ 137

* All power units include plastic protective cover over electric solenoid and quick disconnect Deutsch connector.

All prices F.O.B. point of manufacture unless otherwise stated. Federal, state, and local taxes are not included. All prices and specifications subject to change without notice. A 10% restocking charge on all returned goods. No goods may be returned without written approval of Henderson Products.

Effective: 3-24-2016 REV 1.0 CSM

Bench Press
Scissor Hoist w/Subframe
DEALER PRICE LIST

STANDARD FEATURES

- ***Bench Press*** series 'scissor hoist' with subframe
- Single body prop built into hoist and is self-locking and self-storing
- Hoist is continuously welded
- Finite Element Analysis (FEA) enhanced design
- Mount pack includes all mounting hardware and hose kit
- Single acting 12 VDC power pack (includes electric push button cab control)
- Operating pressure 3250 PSI
- Subframe includes tray to mount 12 VDC power pack
- All cylinders have 2" chrome plated piston rods
- 3 models to choose from
  - BP-20 utilizes a 4.5" X 16" cylinder
  - BP-40 utilizes a 5.0" X 20" cylinder
  - BP-50 utilizes a 5.5" x 20" cylinder
- Overall mounting height
  - BP-20 = 12" mounting height, 4" subframe/requires 8" longsill
  - BP-40 & BP-50 = 13" mounting height, 5" subframe/requires 8" longsill

Type	Class (NTEA)	Body Length	Subframe Length	Hoist Capacity @ Overhang 6"	18"	Subframe Height	Approx. Weight	LIST PRICE
BP-20-SF	20	8'	7.6'	8.1	11.3	4"	489	$ 2,562
BP-20-SF	20	9'	8.6'	7.1	9.4	4"	489	$ 2,606
BP-40-SF	40	9'	8.6'	12.3	16.4	5"	567	$ 2,822
BP-40-SF	40	10'	9.6'	10.9	14.0	5"	567	$ 2,840
BP-40-SF	40	11'	10.6'	9.8	12.3	5"	567	$ 2,858
BP-50-SF	50	9'	8.6'	14.9	19.8	5"	576	$ 2,922
BP-50-SF	50	10'	9.6'	13.2	17.0	5"	576	$ 2,960
BP-50-SF	50	11'	10.6'	11.9	14.9	5"	576	$ 2,992

OPTION DESCRIPTION	SUGGESTED LIST PRICE
Double acting 12 VDC power pack (includes hoses, and electric push button cab control) ----------	$ 116
Deduct single acting 12 VDC power pack, hoses, and electric push button cab control ----------	$ (-324)

*All power units include plastic protective cover over electric solenoid and quick disconnect Deutsch connector.

All prices F.O.B. point of manufacture unless otherwise stated. Federal, state, and local taxes are not included. All prices and specifications subject to change without notice. A 10% restocking charge on all returned goods. No goods may be returned without written approval of Henderson Products. Effective: 3-24-2016 REV 1.0

HENDERSON

PRODUCTS, INC.

1085 SOUTH THIRD STREET
PO BOX 40, MANCHESTER, IA 52057-0040
PHONE: 563-927-2828

SALES QUOTATION

DATE	PAGE
12/12/2016	1

CUSTOMER: Knapheide Truck Equipment Co.
CONTACT: Jim Fountain
ADDRESS: 1200 South Averill Avenue
Flint, Michigan USA 48503

PHONE: 810-762-0755
FAX: 855-629-4643
EMAIL: jfountain@knapheide.com

QUOTE ID: 93031-4
QUOTE DATE: 12/12/2016
VALID UNTIL: 1/11/2017

SALESPERSON: James Fountain
PHONE: 810-762-1100
FAX: 855-629-4643
EMAIL: jfountain@knapheide.com

QUANTITY	DESCRIPTION	LIST PRICE EACH	EXT. LIST PRICE
	QUOTE 93031-4: MDOT		
1	CONFIGURATION 1-1: BlackBelt Maxx		
		$68,542.00	$68,542.00
	0% Discount:	$0.00	$0.00
	Dealer Cost:	$68,542.00	$68,542.00
	DESCRIPTION: BBMX 201SS Sides/Ends, AR400 Floor, SS Bracing 11' BLACKBELT MAXX 201 STAINLESS STEEL CONSTRUCTION NO		
	Body		
	Body Construction: **201SS Sides/Ends, AR400 Floor, SS Bracing**		
	Body Length: **11' BLACKBELT MAXX 201 STAINLESS STEEL CONSTRUCTION**	$43,326.00	$43,326.00
	Gate Options		
	Deduct Summer Gate: **NO**		
	Winter Tailgate: **WINTER TAILGATE (201SS) (SELECT SPINNER OPT BELOW)**	$6,956.00	$6,956.00
	Winter Tailgate Spinner: **BBMAXX DIRECT CAST W/ HENDERSON CONTROLLER (201SS)**	$6,389.00	$6,389.00
	Berm Chute: **201SS BERM CHUTE FOR WINTER TAILGATE**	$285.00	$285.00
	Liquid Tank Options		
	Liquid Tank Options: **DUAL 155(gal) liquid tanks for 11' BBMAXX (201ss)**	$4,093.00	$4,093.00
	Liquid Options		
	Anti-Ice: **ANTI-ICE KIT, TRIPPLE LANE SPRAY BOOM (REQ'S LIQUID TANKS)**	$4,101.00	$4,101.00
	Prewet/Slurry: **PREWET SLURRY KIT INSTALLED (REQ'S LIQUID TANKS)**	$1,761.00	$1,761.00
	Misc Options		
	Oil Reservoir: **30 GALLON OIL RESERVOIR (STAINLESS)**	$908.00	$908.00
	Toolbox: **SLOPED TOOLBOX, RIGHT HAND (201SS)**	$723.00	$723.00
	End Customer: MDOT		

Quote Total:	$68,542.00
0% Discount:	$0.00
0% Sales Tax:	$0.00
Total Dealer Cost:	$68,542.00

HENDERSON

PRODUCTS, INC.

1085 SOUTH THIRD STREET
PO BOX 40, MANCHESTER, IA 52057-0040
PHONE: 563-927-2828

SALES QUOTATION

DATE	PAGE
12/12/2016	1

CUSTOMER: Knapheide Truck Equipment Co.
CONTACT: Jim Fountain
ADDRESS: 1200 South Averill Avenue
Flint, Michigan USA 48503

PHONE: 810-762-0755
FAX: 855-629-4643
EMAIL: jfountain@knapheide.com

QUOTE ID: 93032-4
QUOTE DATE: 12/12/2016
VALID UNTIL: 1/11/2017

SALESPERSON: James Fountain
PHONE: 810-762-1100
FAX: 855-629-4643
EMAIL: jfountain@knapheide.com

QUANTITY	DESCRIPTION	LIST PRICE EACH	EXT. LIST PRICE
	QUOTE 93032-4: MDOT		
1	CONFIGURATION 1-1: BlackBelt Maxx		
		$67,649.00	$67,649.00
	0% Discount:	$0.00	$0.00
	Dealer Cost:	$67,649.00	$67,649.00
	DESCRIPTION: BBMX 201SS Sides/Ends, AR400 Floor, SS Bracing 13' BLACKBELT MAXX 201 STAINLESS STEEL CONSTRUCTION DEDUCT STD SUMMER		
	Body		
	Body Construction: **201SS Sides/Ends, AR400 Floor, SS Bracing**		
	Body Length: **13' BLACKBELT MAXX 201 STAINLESS STEEL CONSTRUCTION**	$44,110.00	$44,110.00
	Gate Options		
	Deduct Summer Gate: **DEDUCT STD SUMMER TAILGATE**	($2,357.00)	($2,357.00)
	Winter Tailgate: **WINTER TAILGATE (201SS) (SELECT SPINNER OPT BELOW)**	$6,956.00	$6,956.00
	Winter Tailgate Spinner: **BBMAXX DIRECT CAST W/ HENDERSON CONTROLLER (201SS)**	$6,389.00	$6,389.00
	Berm Chute: **201SS BERM CHUTE FOR WINTER TAILGATE**	$285.00	$285.00
	Liquid Tank Options		
	Liquid Tank Options: **DUAL 210(gal) liquid tanks for 13' BBMAXX (201ss)**	$4,773.00	$4,773.00
	Liquid Options		
	Anti-Ice: **ANTI-ICE KIT, TRIPPLE LANE SPRAY BOOM (REQ'S LIQUID TANKS)**	$4,101.00	$4,101.00
	Prewet/Slurry: **PREWET SLURRY KIT INSTALLED (REQ'S LIQUID TANKS)**	$1,761.00	$1,761.00
	Misc Options		
	Oil Reservoir: **30 GALLON OIL RESERVOIR (STAINLESS)**	$908.00	$908.00
	Toolbox: **SLOPED TOOLBOX, RIGHT HAND (201SS)**	$723.00	$723.00
	End Customer: MDOT		

Quote Total:	$67,649.00
0% Discount:	$0.00
0% Sales Tax:	$0.00
Total Dealer Cost:	$67,649.00

HENDERSON

PRODUCTS, INC.

1085 SOUTH THIRD STREET
PO BOX 40, MANCHESTER, IA 52057-0040
PHONE: 563-927-2828

SALES QUOTATION

DATE	PAGE
12/12/2016	1

CUSTOMER: Knapheide Truck Equipment Co.
CONTACT: Jim Fountain
ADDRESS: 1200 South Averill Avenue
Flint, Michigan USA 48503

PHONE: 810-762-0755
FAX: 855-629-4643
EMAIL: jfountain@knapheide.com

QUOTE ID: 93033-5
QUOTE DATE: 12/12/2016
VALID UNTIL: 1/11/2017

SALESPERSON: James Fountain
PHONE: 810-762-1100
FAX: 855-629-4643
EMAIL: jfountain@knapheide.com

QUANTITY	DESCRIPTION	LIST PRICE EACH	EXT. LIST PRICE
	QUOTE 93033-5: MDOT		
1	CONFIGURATION 1-1: BlackBelt Maxx		
		$70,494.00	$70,494.00
	0% Discount:	$0.00	$0.00
	Dealer Cost:	$70,494.00	$70,494.00
	DESCRIPTION: BBMX 201SS Sides/Ends, AR400 Floor, SS Bracing 14' BLACKBELT MAXX 201 STAINLESS STEEL CONSTRUCTION NO		
	Body		
	Body Construction: **201SS Sides/Ends, AR400 Floor, SS Bracing**		
	Body Length: **14' BLACKBELT MAXX 201 STAINLESS STEEL CONSTRUCTION**	$44,501.00	$44,501.00
	Gate Options		
	Deduct Summer Gate: **NO**		
	Winter Tailgate: **WINTER TAILGATE (201SS) (SELECT SPINNER OPT BELOW)**	$6,956.00	$6,956.00
	Winter Tailgate Spinner: **BBMAXX DIRECT CAST W/ HENDERSON CONTROLLER (201SS)**	$6,389.00	$6,389.00
	Berm Chute: **201SS BERM CHUTE FOR WINTER TAILGATE**	$285.00	$285.00
	Liquid Tank Options		
	Liquid Tank Options: **DUAL 237(gal) liquid tanks for 14' BBMAXX (201ss)**	$4,870.00	$4,870.00
	Liquid Options		
	Anti-Ice: **ANTI-ICE KIT, TRIPPLE LANE SPRAY BOOM (REQ'S LIQUID TANKS)**	$4,101.00	$4,101.00
	Prewet/Slurry: **PREWET SLURRY KIT INSTALLED (REQ'S LIQUID TANKS)**	$1,761.00	$1,761.00
	Misc Options		
	Oil Reservoir: **30 GALLON OIL RESERVOIR (STAINLESS)**	$908.00	$908.00
	Toolbox: **SLOPED TOOLBOX, RIGHT HAND (201SS)**	$723.00	$723.00
	End Customer: MDOT		

Quote Total:	$70,494.00
0% Discount:	$0.00
0% Sales Tax:	$0.00
Total Dealer Cost:	$70,494.00

HENDERSON

PRODUCTS, INC.

1085 SOUTH THIRD STREET
PO BOX 40, MANCHESTER, IA 52057-0040
PHONE: 563-927-2828

SALES QUOTATION

DATE	PAGE
12/12/2016	1

CUSTOMER: Knapheide Truck Equipment Co.
CONTACT: Jim Fountain
ADDRESS: 1200 South Averill Avenue
Flint, Michigan USA 48503

PHONE: 810-762-0755
FAX: 855-629-4643
EMAIL: jfountain@knapheide.com

QUOTE ID: 93030-4
QUOTE DATE: 12/12/2016
VALID UNTIL: 1/11/2017

SALESPERSON: James Fountain
PHONE: 810-762-1100
FAX: 855-629-4643
EMAIL: jfountain@knapheide.com

QUANTITY	DESCRIPTION	LIST PRICE EACH	EXT. LIST PRICE
	QUOTE 93030-4: MDOT		
1	CONFIGURATION 1-1: BrineXtreme Pro		
		$39,087.00	$39,087.00
	0% Discount:	$0.00	$0.00
	Dealer Cost:	$39,087.00	$39,087.00
	DESCRIPTION: BXPRO Base Unit w/ Integral Mnt Controls (135190.201/145198.201) With US Gateway - First Year of Service Included (1324		
	Base Unit		
	BrineXtreme Pro: **Base Unit w/ Integral Mnt Controls (135190.201/145198.201)**	$35,370.00	$35,370.00
	Cellular Gateway: **With US Gateway - First Year of Service Included (132450)**	$1,589.00	$1,589.00
	Additional Options		
	Hopper Add-On: **Hinged Hopper Cover (136873.201)**	$2,128.00	$2,128.00
	End Customer: MDOT		

Quote Total:	$39,087.00
0% Discount:	$0.00
0% Sales Tax:	$0.00
Total Dealer Cost:	$39,087.00

HENDERSON

PRODUCTS, INC.

1085 SOUTH THIRD STREET
PO BOX 40, MANCHESTER, IA 52057-0040
PHONE: 563-927-2828

SALES QUOTATION

DATE	PAGE
12/12/2016	1

CUSTOMER: Knapheide Truck Equipment Co.
CONTACT: Jim Fountain
ADDRESS: 1200 South Averill Avenue
Flint, Michigan USA 48503

PHONE: 810-762-0755
FAX: 855-629-4643
EMAIL: jfountain@knapheide.com

QUOTE ID: 93029-5
QUOTE DATE: 12/12/2016
VALID UNTIL: 1/11/2017

SALESPERSON: James Fountain
PHONE: 810-762-1100
FAX: 855-629-4643
EMAIL: jfountain@knapheide.com

QUANTITY	DESCRIPTION	LIST PRICE EACH	EXT. LIST PRICE
	QUOTE 93029-5: MDOT		
1	CONFIGURATION 1-1: BrineXtreme Ultimate Trailer		
		$144,344.00	$144,344.00
	0% Discount:	$0.00	$0.00
	Dealer Cost:	$144,344.00	$144,344.00
	DESCRIPTION: BX2 V-Nose Mobile Trailer Yes 200 GPM		
	Xtreme Trailer		
	Trailer Type: **V-Nose Mobile Trailer**	$42,458.00	$42,458.00
	Salinity Control System - Model BX-SC-200-1-E-1-H		
	Add Control System: **Yes**	$36,383.00	$36,383.00
	Flow Rate: **200 GPM**	$1,061.00	$1,061.00
	Electric Service: **460 Volt, 3 Phase, 60Hz**	$266.00	$266.00
	Orientation: **Left Hand**		
	Truck Fill Points: **1 Fill Point**	$7,918.00	$7,918.00
	Brine Maker Heat: **Brine Maker Heat**	$1,371.00	$1,371.00
	Salinity Control Options		
	Air Purge: **Yes**	$464.00	$464.00
	Water Supply Flow Meter Kit: **Yes**	$1,752.00	$1,752.00
	Cellular Gateway: **Yes, (US) First Year of Service Included**	$1,637.00	$1,637.00
	Micro Ingredient Pump: **Yes**	$568.00	$568.00
	Brine Maker - Model BX-SS-NSC-LH-1		
	Include Brine Maker: **Yes**	$25,439.00	$25,439.00
	Material: **Stainless Steel**		
	Self Cleaning: **Yes**	$11,400.00	$11,400.00
	Discharge End: **Left Side**		
	Auger Motor: **110 Volt, Single Phase, 60Hz**		
	Brine Maker Options		
	Roll Tarp: **Yes**	$2,281.00	$2,281.00
	Extra Options		
	Compressor: **Yes**	$1,789.00	$1,789.00
	Generator: **Yes**	$6,130.00	$6,130.00
	Air Conditioning: **Yes**	$2,475.00	$2,475.00
	Storage Tube Kit: **Yes**	$952.00	$952.00

HENDERSON

PRODUCTS, INC.

1085 SOUTH THIRD STREET
PO BOX 40, MANCHESTER, IA 52057-0040
PHONE: 563-927-2828

SALES QUOTATION

DATE	PAGE
12/12/2016	2

CUSTOMER: Knapheide Truck Equipment Co.
CONTACT: Jim Fountain
ADDRESS: 1200 South Averill Avenue
Flint, Michigan USA 48503

PHONE: 810-762-0755
FAX: 855-629-4643
EMAIL: jfountain@knapheide.com

QUOTE ID: 93029-5
QUOTE DATE: 12/12/2016
VALID UNTIL: 1/11/2017

SALESPERSON: James Fountain
PHONE: 810-762-1100
FAX: 855-629-4643
EMAIL: jfountain@knapheide.com

QUANTITY	DESCRIPTION	LIST PRICE EACH	EXT. LIST PRICE
	End Customer: MDOT		

Quote Total:	$144,344.00
0% Discount:	$0.00
0% Sales Tax:	$0.00
Total Dealer Cost:	$144,344.00

HENDERSON

PRODUCTS, INC.

1085 SOUTH THIRD STREET
PO BOX 40, MANCHESTER, IA 52057-0040
PHONE: 563-927-2828

SALES QUOTATION

DATE	PAGE
12/12/2016	1

CUSTOMER: Knapheide Truck Equipment Co.
CONTACT: Jim Fountain
ADDRESS: 1200 South Averill Avenue
Flint, Michigan USA 48503

PHONE: 810-762-0755
FAX: 855-629-4643
EMAIL: jfountain@knapheide.com

QUOTE ID: 93027-4
QUOTE DATE: 12/12/2016
VALID UNTIL: 1/11/2017

SALESPERSON: James Fountain
PHONE: 810-762-1100
FAX: 855-629-4643
EMAIL: jfountain@knapheide.com

QUANTITY	DESCRIPTION	LIST PRICE EACH	EXT. LIST PRICE
	QUOTE 93027-4: MDOT		
1	CONFIGURATION 1-1: BrineXtreme Truck Fill Pro		
		$20,557.00	$20,557.00
	0% Discount:	$0.00	$0.00
	Dealer Cost:	$20,557.00	$20,557.00
	DESCRIPTION: BXFTP Triple valve, draws from or blend from (3) sources Yes Yes, (US) - 1st Year Service Included		
	BrineXtreme Truck Fill Pro		
	Valve Configuration: **Triple valve, draws from or blend from (3) sources**	$17,910.00	$17,910.00
	Options		
	Truck Offload - Powered Return from truck to storage: **Yes**	$1,058.00	$1,058.00
	Cellular Gateway: **Yes, (US) - 1st Year Service Included**	$1,589.00	$1,589.00
	End Customer: MDOT		

Quote Total:	$20,557.00
0% Discount:	$0.00
0% Sales Tax:	$0.00
Total Dealer Cost:	$20,557.00

HENDERSON

PRODUCTS, INC.

1085 SOUTH THIRD STREET
PO BOX 40, MANCHESTER, IA 52057-0040
PHONE: 563-927-2828

SALES QUOTATION

DATE	PAGE
12/12/2016	1

CUSTOMER: Knapheide Truck Equipment Co.
CONTACT: Jim Fountain
ADDRESS: 1200 South Averill Avenue
Flint, Michigan USA 48503

PHONE: 810-762-0755
FAX: 855-629-4643
EMAIL: jfountain@knapheide.com

QUOTE ID: 93028-5
QUOTE DATE: 12/12/2016
VALID UNTIL: 1/11/2017

SALESPERSON: James Fountain
PHONE: 810-762-1100
FAX: 855-629-4643
EMAIL: jfountain@knapheide.com

QUANTITY	DESCRIPTION	LIST PRICE EACH	EXT. LIST PRICE
	QUOTE 93028-5: MDOT		
1	CONFIGURATION 1-1: BrineXtreme Ultimate		
		$175,417.00	$175,417.00
	0% Discount:	$0.00	$0.00
	Dealer Cost:	$175,417.00	$175,417.00
	DESCRIPTION: BrineXtreme Ultimate		
	Salinity Control System - Model BX-SC-100-1-R-3-H		
	Add Control System: **Yes**	$35,640.00	$35,640.00
	Flow Rate: **100 GPM**		
	Motor: **460 Volt, 3 Phase, 60Hz**	$266.00	$266.00
	Orientation: **Right Hand**		
	Truck Fill Points: **3 Fill Points**	$22,731.00	$22,731.00
	Brine Maker Heat: **Brine Maker Heat**	$1,591.00	$1,591.00
	Salinity Control Options		
	Warning Beacon 24V Strobe - BX-BEACON: **Yes**	$289.00	$289.00
	Air Purge - 131419: **Yes**	$464.00	$464.00
	Recycled Water Kit: **Yes**	$1,205.00	$1,205.00
	Water Supply Flow Meter Kit: **Yes**	$1,752.00	$1,752.00
	Cellular Gateway: **Yes, (US) First Year of Service Included**	$1,637.00	$1,637.00
	Micro Ingredient Pump - 131330: **Yes**	$568.00	$568.00
	Brine Maker - Model BX-ST-SS-SC-RH-1		
	Include Brine Maker: **Yes**	$25,439.00	$25,439.00
	Material: **Stainless Steel**		
	Self Cleaning: **Yes**	$11,400.00	$11,400.00
	Discharge End: **Right Side**		
	Auger Motor: **110 Volt, Single Phase, 60Hz**		
	Brine Maker Options		
	Leg Extension - 134163.304: **18" Extension**	$931.00	$931.00
	Roll Tarp - 133519.304: **Yes**	$2,281.00	$2,281.00
	Hopper Extension: **Yes**	$2,192.00	$2,192.00
	Add On Module One - Model BX-AO-300-1-1A		
	Add Module One: **Yes**		
	Flow Rate (Module One): **300GPM**	$19,124.00	$19,124.00

HENDERSON

PRODUCTS, INC.

1085 SOUTH THIRD STREET
PO BOX 40, MANCHESTER, IA 52057-0040
PHONE: 563-927-2828

SALES QUOTATION

DATE	PAGE
12/12/2016	2

CUSTOMER: Knapheide Truck Equipment Co.
CONTACT: Jim Fountain
ADDRESS: 1200 South Averill Avenue
Flint, Michigan USA 48503

PHONE: 810-762-0755
FAX: 855-629-4643
EMAIL: jfountain@knapheide.com

QUOTE ID: 93028-5
QUOTE DATE: 12/12/2016
VALID UNTIL: 1/11/2017

SALESPERSON: James Fountain
PHONE: 810-762-1100
FAX: 855-629-4643
EMAIL: jfountain@knapheide.com

QUANTITY	DESCRIPTION	LIST PRICE EACH	EXT. LIST PRICE
	Motor (Module One): **480 Volts, 3 Phase**		
	Fill Points (Module One): **1 Fill Point**		
	Agitatation (Module One): **Yes**		
	Add On Module Two - Model BX-AO-100-1-1A		
	Add Module Two: **Yes**		
	Flow Rate (Module Two): **100GPM**	$15,969.00	$15,969.00
	Motor (Module Two): **480 Volts, 3 Phase**		
	Fill Points (Module Two): **1 Fill Point**		
	Agitation (Module Two): **Yes**		
	Add On Module Three - Model BX-AO-100-1-1A		
	Add Module Three: **Yes**		
	Flow Rate (Module Three): **100GPM**	$15,969.00	$15,969.00
	Motor (Module Three): **480 Volts, 3 Phase**		
	Fill Points (Module Three): **1 Fill Point**		
	Agitation (Module Three): **Yes**		
	Add On Module Four - Model BX-AO-100-1-1		
	Add Module Four: **Yes**		
	Flow Rate (Module Four): **100GPM**	$15,969.00	$15,969.00
	Motor (Module Four): **480 Volts, 3 Phase**		
	Fill Points (Module Four): **1 Fill Point**		
	End Customer: MDOT		

Quote Total:	$175,417.00
0% Discount:	$0.00
0% Sales Tax:	$0.00
Total Dealer Cost:	$175,417.00

FIRST RESPONSE
3-N-1 System

Henderson Products, Inc. introduces the First Response system, the answer to all your snow and ice control requirements, regardless of road conditions and climate changes. The First Response system provides precision control and ample granular and liquid capacity for anti-icing liquid applications, granular spreading and/or pre-wetting. In addition, all of these functions can be changed on the go. Another innovative product from the

The Dependable Ones

Shown with optional equipment

- **Granular Applications:**
  - Allows for precise spreading of all granular material commonly used.

- **Pre-wetted Granular:**
  - Apply and control gallon per ton of pre-wetting solution to granular materials.
  - Allows '*On the Go'* pre-wetting of granular materials.

- **Anti-icing:**
  - Allows for direct liquid application, which gives you the capability to apply liquid directly to the road surface.
  - Sprays liquid anti-icing materials and provides selectable coverage over 1, 2, or 3 lanes at one time and can be changed from the cab. High capacity anti-icing pump provides sufficient flow to achieve 15 – 45 gallons per lane mile of liquid.

FEATURES / SPECIFICATIONS

BODY
Sides, ends and side supports are of 10 gauge 304 stainless steel. The body is continuously welded on the inside and outside. Side slope is 50° and rear slope 9°. Inside top width of V -box is 72” and the outside width is 82”. A 304 stainless steel enclosure is provided at the rear of body that houses the liquid pumps and valving. formed 304 stainless steel 1/4” x 2” lift hooks are on each corner. All hardware is stainless steel.

LIQUID RESERVOIRS
Reservoirs are 10 gauge 304 stainless steel full length of body, with 5” of storage capacity under the spreader body to allow liquid to flow between tanks. Reservoirs are an integral part of the spreader body with all seams continuously welded. Liquid reservoirs are fully baffled to reduce liquid movement and utilized as side supports for the spreader body. Reservoirs combined for approximately 100 gallons per foot length of body. Reservoir includes a full length agitator to ensure liquid material remains in suspension.

SPINNER CHUTE ASSEMBLY
Completely enclosed telescopic design is of 10 ga. stainless steel. Top-mounted hydraulic spinner motor is enclosed in the chute to maximize material flow to the spinner disk, improving spread pattern. It is mounted directly to the spinner for elimination of shaft and bearings. Two (2) internal baffles direct material flow onto the spinner disk for directional spread control. Three external adjustable deflectors and one fixed deflector with overlapping corners. The adjustable spinner deflectors are easily replaceable without tools for easy servicing. A quick latching spinner bypass chute diverts material behind spinner chute for fast unloading. Spinner disk is 20” diameter, poly with replaceable hub.

Top grate screens are constructed of 3/8” rod on 3/8” rod with anti-freeze hinges. A hydraulic safety interlock auger shut-off system shuts the augers down when top screens are opened to help prevent personal injury. Interlock plumbed at factory.

AUGER CONVEYOR
Dual 7” diameter variable pitch augers convey the granular material. The wider bottom combined with the counter rotating augers help prevent bridging and helps break up frozen granular materials. Each auger is driven at the rear by a high torque hydraulic motor and planetary gearbox, which is directly coupled to the end of the auger shaft. Auger shafts utilize a polyurethane bushing at both ends of each auger to eliminate seizing and ensure ease of maintenance. Front auger bearing grease tubes are extended for easy maintenance.

OPTIONS
Chassis Mount with Integral Sloped Fenders • Heavy Duty Top Grate Screens • Std. Light Kit • Inverted Vee • Hold Down Kit

ANTI-ICE SYSTEM / PRE-WET

Anti-icing variable displacement orifice nozzle assemblies provides direct application of liquid to the pavement and provide a much wider range of application rates and truck speeds than fixed displacement nozzles. The nozzle assemblies are adjustable in height and angle for optimum placement of liquid and provide left, center and right lane coverage of liquid.

The pre-wetting function also features a varible displacement orfice which provides an extended range of liquid material flow These orfices are positioned in the spinner chute assembly and applies the liquid to granular material.

Two in-line liquid flow meters provide information to the hydraulic control system for precise control and monitoring both pre-wetting and anti-icing applications. All components are mounted in a self enclosed stainless steel cabinet. Components are easily accessable via hinged doors.

Length	• Capacities		Weight of Unit Approx. (LBS.)	Outside Width (inches)	Recommended C/A or C/T (inches)
	Granular (cu. yd.) (Struck)	Liquid (gal.)			
9’	5.2	900	4100	82”	72 “C/A
10’	5.8	1000	4400	82”	82” C/A
11’	6.4	1100	4700	82”	96” C/A
12’	7.0	1200	5000	82”	108” C/A
13’	7.5	1300	5300	82”	96” C/T
14’	8.1	1400	5600	82”	108” C/T
15’	8.7	1500	5900	82”	120” C/T

• Caution must be used when liquid and granular capacities are utilized.

Liquid application provides for one, two or three lanes with shut off valves and in-cab switches for lane selection *‘on the go’*.

Henderson
P.O. Box 40 · Manchester, Iowa 52057
800-359-4970 · www.hendersonproducts.com

©2004 Henderson Products, Inc. Litho in USA · Henderson reserves the right in pursuit of continuous product improvement to change specifications used herein.

Djm 12/03

HENDERSON

PRODUCTS, INC.

1085 SOUTH THIRD STREET
PO BOX 40, MANCHESTER, IA 52057-0040
PHONE: 563-927-2828

SALES QUOTATION

DATE	PAGE
12/12/2016	1

CUSTOMER: Knapheide Truck Equipment Co.
CONTACT: Jim Fountain
ADDRESS: 1200 South Averill Avenue
Flint, Michigan USA 48503

PHONE: 810-762-0755
FAX: 855-629-4643
EMAIL: jfountain@knapheide.com

QUOTE ID: 93048-5
QUOTE DATE: 12/12/2016
VALID UNTIL: 1/11/2017

SALESPERSON: James Fountain
PHONE: 810-762-1100
FAX: 855-629-4643
EMAIL: jfountain@knapheide.com

QUANTITY	DESCRIPTION	LIST PRICE EACH	EXT. LIST PRICE
	QUOTE 93048-5: MDOT		
1	CONFIGURATION 1-1: FSH salt / sand spreader		
		$23,303.00	$23,303.00
	0% Discount:	$0.00	$0.00
	Dealer Cost:	$23,303.00	$23,303.00
	DESCRIPTION: FSH FSH-II Salt/Sand Spreader 10' 201SS - 10 GA sides/ends, 7 GA sills/floor		
	Model		
	Spreader Model: **FSH-II Salt/Sand Spreader**		
	Hopper		
	Hopper length: **10'**		
	Hopper material: **201SS - 10 GA sides/ends, 7 GA sills/floor**		
	Capacity: **FSH-II 50" (5.6 CY) w/ formed chain shields standard**	$11,536.00	$11,536.00
	Conveyor		
	Conveyor: **Dual 7" dia. augers**	$4,496.00	$4,496.00
	Gearcase: **3.6:1 planetary gearcase**		
	Spinner and chute options		
	Chute type: **Standard Dump Over Chute Same Material as Hopper**		
	Tilt-up spinner: **Tilt-up spinner with hand wrench, SS (loose "SL")**	$490.00	$490.00
	Spinner disk: **Standard disk with Stainless Vanes**		
	Chute Extension: **10" SS Spinner Chute Extension (installed)**	$286.00	$286.00
	Inverted vee		
	Inverted vee: **Inverted vee, 201ss**	$855.00	$855.00
	Install inverted vee: **Install at factory**	$74.00	$74.00
	Top grate screens		
	Screen type: **H.D. top grate screens I.L.O Std Screens**	$556.00	$556.00
	Install top grate screens: **Install at factory**		
	Hydraulics		
	Rear hose kit: **Rear hose kit w/ quick couplers (loose "SL")**	$396.00	$396.00

HENDERSON

PRODUCTS, INC.

1085 SOUTH THIRD STREET
PO BOX 40, MANCHESTER, IA 52057-0040
PHONE: 563-927-2828

SALES QUOTATION

DATE	PAGE
12/12/2016	2

CUSTOMER: Knapheide Truck Equipment Co.
CONTACT: Jim Fountain
ADDRESS: 1200 South Averill Avenue
Flint, Michigan USA 48503

PHONE: 810-762-0755
FAX: 855-629-4643
EMAIL: jfountain@knapheide.com

QUOTE ID: 93048-5
QUOTE DATE: 12/12/2016
VALID UNTIL: 1/11/2017

SALESPERSON: James Fountain
PHONE: 810-762-1100
FAX: 855-629-4643
EMAIL: jfountain@knapheide.com

QUANTITY	DESCRIPTION	LIST PRICE EACH	EXT. LIST PRICE
	Optional equipment		
	Hold down kits: **Dump body kit w/ rachet straps**	$380.00	$380.00
	Ladders: **Rear mount, 304SS (loose "SL")**	$876.00	$876.00
	Catwalks w/ truck frame mount kit: **201SS with anti-skid tape (installed)**	$2,013.00	$2,013.00
	Rubber side shields: **Rubber side shields (loose "SL")**	$465.00	$465.00
	Metal spill shields: **Front metal spill shields, 304SS (loose "SL")**	$398.00	$398.00
	Extended front idler grease tubes: **Extended front idler grease tubes**	$181.00	$181.00
	Body Guides: **Body Guides (loose "SL")**	$145.00	$145.00
	Trunnion latch for tailgate: **Trunnion latch, Mild Channel (loose "SL")**	$156.00	$156.00
	Paint: **None or N/A**		
	End Customer: MDOT		

Quote Total:	$23,303.00
0% Discount:	$0.00
0% Sales Tax:	$0.00
Total Dealer Cost:	$23,303.00

HENDERSON

PRODUCTS, INC.

1085 SOUTH THIRD STREET
PO BOX 40, MANCHESTER, IA 52057-0040
PHONE: 563-927-2828

SALES QUOTATION

DATE	PAGE
12/12/2016	1

CUSTOMER: Knapheide Truck Equipment Co.
CONTACT: Jim Fountain
ADDRESS: 1200 South Averill Avenue
Flint, Michigan USA 48503

PHONE: 810-762-0755
FAX: 855-629-4643
EMAIL: jfountain@knapheide.com

QUOTE ID: 93049-5
QUOTE DATE: 12/12/2016
VALID UNTIL: 1/11/2017

SALESPERSON: James Fountain
PHONE: 810-762-1100
FAX: 855-629-4643
EMAIL: jfountain@knapheide.com

QUANTITY	DESCRIPTION	LIST PRICE EACH	EXT. LIST PRICE
	QUOTE 93049-5: MDOT		
1	CONFIGURATION 1-1: FSH salt / sand spreader		
		$23,662.00	$23,662.00
	0% Discount:	$0.00	$0.00
	Dealer Cost:	$23,662.00	$23,662.00
	DESCRIPTION: FSH FSH-II Salt/Sand Spreader 13' 201SS - 10 GA sides/ends, 7 GA sills/floor		
	Model		
	Spreader Model: **FSH-II Salt/Sand Spreader**		
	Hopper		
	Hopper length: **13'**		
	Hopper material: **201SS - 10 GA sides/ends, 7 GA sills/floor**		
	Capacity: **FSH-II 50" (7.3 CY) w/ formed chain shields standard**	$13,140.00	$13,140.00
	Conveyor		
	Conveyor: **Dual 7" dia. augers**	$5,513.00	$5,513.00
	Gearcase: **3.6:1 planetary gearcase**		
	Spinner and chute options		
	Chute type: **Standard Dump Over Chute Same Material as Hopper**		
	Tilt-up spinner: **Tilt-up spinner with hand wrench, SS (loose "SL")**	$490.00	$490.00
	Spinner disk: **Standard disk with Stainless Vanes**		
	Chute Extension: **10" SS Spinner Chute Extension (installed)**	$286.00	$286.00
	Inverted vee		
	Inverted vee: **Inverted vee, 201ss**		
	Install inverted vee: **Install at factory**		
	Top grate screens		
	Screen type: **H.D. top grate screens I.L.O Std Screens**	$650.00	$650.00
	Install top grate screens: **Install at factory**		
	Hydraulics		
	Rear hose kit: **Rear hose kit w/ quick couplers (loose "SL")**	$396.00	$396.00

HENDERSON

PRODUCTS, INC.

1085 SOUTH THIRD STREET
PO BOX 40, MANCHESTER, IA 52057-0040
PHONE: 563-927-2828

SALES QUOTATION

DATE	PAGE
12/12/2016	2

CUSTOMER: Knapheide Truck Equipment Co.
CONTACT: Jim Fountain
ADDRESS: 1200 South Averill Avenue
Flint, Michigan USA 48503

PHONE: 810-762-0755
FAX: 855-629-4643
EMAIL: jfountain@knapheide.com

QUOTE ID: 93049-5
QUOTE DATE: 12/12/2016
VALID UNTIL: 1/11/2017

SALESPERSON: James Fountain
PHONE: 810-762-1100
FAX: 855-629-4643
EMAIL: jfountain@knapheide.com

QUANTITY	DESCRIPTION	LIST PRICE EACH	EXT. LIST PRICE
	Optional equipment		
	Hold down kits: **Dump body kit w/ rachet straps**	$380.00	$380.00
	Ladders: **Rear mount, 304SS (loose "SL")**	$876.00	$876.00
	Rubber side shields: **Rubber side shields (loose "SL")**	$683.00	$683.00
	Extended front idler grease tubes: **Extended front idler grease tubes**	$219.00	$219.00
	Body Guides: **Body Guides (loose "SL")**	$145.00	$145.00
	Trunnion latch for tailgate: **Trunnion latch, Mild Channel (loose "SL")**	$156.00	$156.00
	Install Henderson pre-wet system: **Install Henderson pre-wet system**	$453.00	$453.00
	Conveyor motor w/ integral speed sensor: **Motor w/ integral speed sensor**	$275.00	$275.00
	Paint: **None or N/A**		
	End Customer: MDOT		

Quote Total:	$23,662.00
0% Discount:	$0.00
0% Sales Tax:	$0.00
Total Dealer Cost:	$23,662.00

HENDERSON

PRODUCTS, INC.

1085 SOUTH THIRD STREET
PO BOX 40, MANCHESTER, IA 52057-0040
PHONE: 563-927-2828

SALES QUOTATION

DATE	PAGE
12/12/2016	1

CUSTOMER: Knapheide Truck Equipment Co.
CONTACT: Jim Fountain
ADDRESS: 1200 South Averill Avenue
Flint, Michigan USA 48503

PHONE: 810-762-0755
FAX: 855-629-4643
EMAIL: jfountain@knapheide.com

QUOTE ID: 93042-4
QUOTE DATE: 12/12/2016
VALID UNTIL: 1/11/2017

SALESPERSON: James Fountain
PHONE: 810-762-1100
FAX: 855-629-4643
EMAIL: jfountain@knapheide.com

QUANTITY	DESCRIPTION	LIST PRICE EACH	EXT. LIST PRICE
	QUOTE 93042-4: MDOT		
1	CONFIGURATION 1-1: Liquid anti-icing system		
		$19,313.00	$19,313.00
	0% Discount:	$0.00	$0.00
	Dealer Cost:	$19,313.00	$19,313.00
	DESCRIPTION: LAS 925 gallon tank, mild hoop kit, painted frame kit Std 3 Lane Boom 32 gal. per lane brass nozzle tips, no extra charge		
	Tank Size		
	Tank Capacity / Hoop Kit: **925 gallon tank, mild hoop kit, painted frame kit**	$10,167.00	$10,167.00
	Boom Options		
	Boom: **Std 3 Lane Boom**		
	Nozzle Tips: **32 gal. per lane brass nozzle tips, no extra charge**		
	Frame Options		
	Main Frame Material: **304SS stainless steel**	$1,208.00	$1,208.00
	Hoop Kit: **Stainless Hoop Kit**	$605.00	$605.00
	Wheel Guide Kit: **304SS stainless steel**	$363.00	$363.00
	Leg Kit (supports empty unit only): **304SS stainless steel**	$1,486.00	$1,486.00
	Ladder Kit: **304SS stainless steel**	$670.00	$670.00
	Lift Frame Kit: **304SS stainless steel**	$1,751.00	$1,751.00
	Miscellaneous Options		
	Hose Reel Kit: **Yes**	$1,444.00	$1,444.00
	Fluid Level Kit: **Yes**	$116.00	$116.00
	Baffling Surgebusters (1 Unit per 30 gallon): **Yes, 925 gallon tank capacity**	$1,117.00	$1,117.00
	Flowmeter: **Yes**		
	Trunnion Latch: **Stainless steel**	$140.00	$140.00
	Tie down straps: **Yes**		
	Site guage: **Yes**	$246.00	$246.00
	End Customer: MDOT		

Quote Total:	$19,313.00
0% Discount:	$0.00
0% Sales Tax:	$0.00
Total Dealer Cost:	$19,313.00

HENDERSON

PRODUCTS, INC.

1085 SOUTH THIRD STREET
PO BOX 40, MANCHESTER, IA 52057-0040
PHONE: 563-927-2828

SALES QUOTATION

DATE	PAGE
12/12/2016	1

CUSTOMER: Knapheide Truck Equipment Co.
CONTACT: Jim Fountain
ADDRESS: 1200 South Averill Avenue
Flint, Michigan USA 48503

PHONE: 810-762-0755
FAX: 855-629-4643
EMAIL: jfountain@knapheide.com

QUOTE ID: 93043-4
QUOTE DATE: 12/12/2016
VALID UNTIL: 1/11/2017

SALESPERSON: James Fountain
PHONE: 810-762-1100
FAX: 855-629-4643
EMAIL: jfountain@knapheide.com

QUANTITY	DESCRIPTION	LIST PRICE EACH	EXT. LIST PRICE
	QUOTE 93043-4: MDOT		
1	CONFIGURATION 1-1: Liquid anti-icing system		
		$21,002.00	$21,002.00
	0% Discount:	$0.00	$0.00
	Dealer Cost:	$21,002.00	$21,002.00
	DESCRIPTION: LAS 1235 gal. tank, mild hoop kit, paint frame kit Std 3 Lane Boom 32 gal. per lane brass nozzle tips, no extra charge		
	Tank Size		
	Tank Capacity / Hoop Kit: **1235 gal. tank, mild hoop kit, paint frame kit**	$12,065.00	$12,065.00
	Boom Options		
	Boom: **Std 3 Lane Boom**		
	Nozzle Tips: **32 gal. per lane brass nozzle tips, no extra charge**		
	Frame Options		
	Main Frame Material: **304SS stainless steel**	$1,208.00	$1,208.00
	Hoop Kit: **Standard Hoop Kit**		
	Wheel Guide Kit: **304SS stainless steel**	$363.00	$363.00
	Leg Kit (supports empty unit only): **304SS stainless steel**	$1,486.00	$1,486.00
	Ladder Kit: **304SS stainless steel**	$670.00	$670.00
	Lift Frame Kit: **304SS stainless steel**	$1,751.00	$1,751.00
	Miscellaneous Options		
	Hose Reel Kit: **Yes**	$1,444.00	$1,444.00
	Fluid Level Kit: **Yes**	$116.00	$116.00
	Baffling Surgebusters (1 Unit per 30 gallon): **Yes, 1235 gallon tank capacity**	$1,513.00	$1,513.00
	Flowmeter: **Yes**		
	Trunnion Latch: **Stainless steel**	$140.00	$140.00
	Tie down straps: **Yes**		
	Site guage: **Yes**	$246.00	$246.00
	End Customer: MDOT		

Quote Total:	$21,002.00
0% Discount:	$0.00
0% Sales Tax:	$0.00
Total Dealer Cost:	$21,002.00

HENDERSON

PRODUCTS, INC.

1085 SOUTH THIRD STREET
PO BOX 40, MANCHESTER, IA 52057-0040
PHONE: 563-927-2828

SALES QUOTATION

DATE	PAGE
12/12/2016	1

CUSTOMER: Knapheide Truck Equipment Co.
CONTACT: Jim Fountain
ADDRESS: 1200 South Averill Avenue
Flint, Michigan USA 48503

PHONE: 810-762-0755
FAX: 855-629-4643
EMAIL: jfountain@knapheide.com

QUOTE ID: 93044-4
QUOTE DATE: 12/12/2016
VALID UNTIL: 1/11/2017

SALESPERSON: James Fountain
PHONE: 810-762-1100
FAX: 855-629-4643
EMAIL: jfountain@knapheide.com

QUANTITY	DESCRIPTION	LIST PRICE EACH	EXT. LIST PRICE
	QUOTE 93044-4: MDOT		
1	CONFIGURATION 1-1: Liquid anti-icing system		
		$20,468.00	$20,468.00
	0% Discount:	$0.00	$0.00
	Dealer Cost:	$20,468.00	$20,468.00
	DESCRIPTION: LAS 1635 gallon heavy wall tank, mild hoop kit Std 3 Lane Boom 32 gal. per lane brass nozzle tips, no extra charge		
	Tank Size		
	Tank Capacity / Hoop Kit: **1635 gallon heavy wall tank, mild hoop kit**	$12,930.00	$12,930.00
	Boom Options		
	Boom: **Std 3 Lane Boom**		
	Nozzle Tips: **32 gal. per lane brass nozzle tips, no extra charge**		
	Frame Options		
	Main Frame Material: **304SS stainless steel**	$1,208.00	$1,208.00
	Hoop Kit: **Standard Hoop Kit**		
	Wheel Guide Kit: **304SS stainless steel**	$363.00	$363.00
	Leg Kit (supports empty unit only): **304SS stainless steel**	$1,486.00	$1,486.00
	Ladder Kit: **304SS stainless steel**	$670.00	$670.00
	Miscellaneous Options		
	Hose Reel Kit: **Yes**	$1,444.00	$1,444.00
	Baffling Surgebusters (1 Unit per 30 gallon): **Yes, 1635 gallon tank capacity**	$1,981.00	$1,981.00
	Flowmeter: **Yes**		
	Trunnion Latch: **Stainless steel**	$140.00	$140.00
	Tie down straps: **Yes**		
	Site guage: **Yes**	$246.00	$246.00
	End Customer: MDOT		

Quote Total:	$20,468.00
0% Discount:	$0.00
0% Sales Tax:	$0.00
Total Dealer Cost:	$20,468.00

HENDERSON

PRODUCTS, INC.

1085 SOUTH THIRD STREET
PO BOX 40, MANCHESTER, IA 52057-0040
PHONE: 563-927-2828

SALES QUOTATION

DATE	PAGE
12/12/2016	1

CUSTOMER: Knapheide Truck Equipment Co.
CONTACT: Jim Fountain
ADDRESS: 1200 South Averill Avenue
Flint, Michigan USA 48503

PHONE: 810-762-0755
FAX: 855-629-4643
EMAIL: jfountain@knapheide.com

QUOTE ID: 93045-4
QUOTE DATE: 12/12/2016
VALID UNTIL: 1/11/2017

SALESPERSON: James Fountain
PHONE: 810-762-1100
FAX: 855-629-4643
EMAIL: jfountain@knapheide.com

QUANTITY	DESCRIPTION	LIST PRICE EACH	EXT. LIST PRICE
	QUOTE 93045-4: MDOT		
1	CONFIGURATION 1-1: Liquid anti-icing system		
		$24,302.00	$24,302.00
	0% Discount:	$0.00	$0.00
	Dealer Cost:	$24,302.00	$24,302.00
	DESCRIPTION: LAS 1800 gallon heavy wall tank (dual 900 gal.), paint hoop kit Std 3 Lane Boom 32 gal. per lane brass nozzle tips, no e		
	Tank Size		
	Tank Capacity / Hoop Kit: **1800 gallon heavy wall tank (dual 900 gal.), paint hoop kit**	$13,185.00	$13,185.00
	Boom Options		
	Boom: **Std 3 Lane Boom**		
	Nozzle Tips: **32 gal. per lane brass nozzle tips, no extra charge**		
	Frame Options		
	Main Frame Material: **304SS stainless steel**	$1,208.00	$1,208.00
	Hoop Kit: **Stainless Hoop Kit**	$1,532.00	$1,532.00
	Wheel Guide Kit: **304SS stainless steel**	$363.00	$363.00
	Leg Kit (supports empty unit only): **304SS stainless steel**	$1,486.00	$1,486.00
	Ladder Kit: **304SS stainless steel**	$670.00	$670.00
	Lift Frame Kit: **304SS stainless steel**	$1,751.00	$1,751.00
	Miscellaneous Options		
	Hose Reel Kit: **Yes**	$1,444.00	$1,444.00
	Fluid Level Kit: **Yes**	$116.00	$116.00
	Baffling Surgebusters (1 Unit per 30 gallon): **Yes, 1800 gallon tank capacity**	$2,161.00	$2,161.00
	Flowmeter: **Yes**		
	Trunnion Latch: **Stainless steel**	$140.00	$140.00
	Tie down straps: **Yes**		
	Site guage: **Yes**	$246.00	$246.00
	End Customer: MDOT		

Quote Total:	$24,302.00
0% Discount:	$0.00
0% Sales Tax:	$0.00
Total Dealer Cost:	$24,302.00

HENDERSON

PRODUCTS, INC.

1085 SOUTH THIRD STREET
PO BOX 40, MANCHESTER, IA 52057-0040
PHONE: 563-927-2828

SALES QUOTATION

DATE	PAGE
12/12/2016	1

CUSTOMER: Knapheide Truck Equipment Co.
CONTACT: Jim Fountain
ADDRESS: 1200 South Averill Avenue
Flint, Michigan USA 48503

PHONE: 810-762-0755
FAX: 855-629-4643
EMAIL: jfountain@knapheide.com

QUOTE ID: 93058-4
QUOTE DATE: 12/12/2016
VALID UNTIL: 1/11/2017

SALESPERSON: James Fountain
PHONE: 810-762-1100
FAX: 855-629-4643
EMAIL: jfountain@knapheide.com

QUANTITY	DESCRIPTION	LIST PRICE EACH	EXT. LIST PRICE
	QUOTE 93058-4: MDOT		
1	CONFIGURATION 1-1: MAGNUM rock and demolition dump body		
		$23,606.00	$23,606.00
	0% Discount:	$0.00	$0.00
	Dealer Cost:	$23,606.00	$23,606.00
	DESCRIPTION: DBE 14' body length Standard vertical tailgate style One piece sloping sides		
	Body Size/Shape		
	Body Length: **14' body length**	$16,489.00	$16,489.00
	Rear Body Design: **Standard vertical tailgate style**		
	Side Style: **One piece sloping sides**		
	Materials/Construction		
	Floor Material: **1/4" AR 400**	$620.00	$620.00
	Side and Headsheet Material: **1/4" AR 400**	$1,506.00	$1,506.00
	Tailgate Options		
	Tailgate Material: **1/4" AR400 TAILGATE SHEET**	$219.00	$219.00
	Tailgate Style: **Hi-lift with electric over air control**	$1,678.00	$1,678.00
	Tailgate Bracing: **Triple horizontal (standard 4 panel)**		
	Asphalt Lip: **12" bolt-on, 7 ga. with 1/4" endplates**	$331.00	$331.00
	Air Tailgate Release Valve: **Standard Air release valve**		
	Lighting		
	Lighting Package: **LED**	$168.00	$168.00
	Rear Light Holes: **Two extra holes in each rear bolster**	$158.00	$158.00
	Options/Accessories		
	Cabshield: **Standard cabshield, 10 GA GR50 steel**		
	Cabshield Size: **16" X 78" (1/4 cab)**	$322.00	$322.00
	Fenders: **Standard 9' length**		
	Side Ladder: **Yes, shipped loose**	$348.00	$348.00
	Rubber Mounting Pads: **Yes (10 - 3' sections)**	$677.00	$677.00
	Hoist/Hydraulics		
	Hoist Type: **Telescopic Trunion Mount Hoist with Internal Doghouse**		
	Cylinder Type: **Trunnion mount double acting hoist (CS-130-5.5-3)**	$435.00	$435.00

HENDERSON

PRODUCTS, INC.

1085 SOUTH THIRD STREET
PO BOX 40, MANCHESTER, IA 52057-0040
PHONE: 563-927-2828

SALES QUOTATION

DATE	PAGE
12/12/2016	2

CUSTOMER: Knapheide Truck Equipment Co.
CONTACT: Jim Fountain
ADDRESS: 1200 South Averill Avenue
Flint, Michigan USA 48503

PHONE: 810-762-0755
FAX: 855-629-4643
EMAIL: jfountain@knapheide.com

QUOTE ID: 93058-4
QUOTE DATE: 12/12/2016
VALID UNTIL: 1/11/2017

SALESPERSON: James Fountain
PHONE: 810-762-1100
FAX: 855-629-4643
EMAIL: jfountain@knapheide.com

QUANTITY	DESCRIPTION	LIST PRICE EACH	EXT. LIST PRICE
	Install Hoist Cylinder: **Yes**	$307.00	$307.00
	Hydraulic Reservoir: **30 gal. side mount**		
	Hydraulic Pump: **G105 direct mount double acting cw for auto transmission**	$348.00	$348.00
	End Customer: MDOT All options do not have to be picked, quote can be modified, many more options available.		

Quote Total:	$23,606.00
0% Discount:	$0.00
0% Sales Tax:	$0.00
Total Dealer Cost:	$23,606.00

HENDERSON

PRODUCTS, INC.

1085 SOUTH THIRD STREET
PO BOX 40, MANCHESTER, IA 52057-0040
PHONE: 563-927-2828

SALES QUOTATION

DATE	PAGE
12/12/2016	1

CUSTOMER: Knapheide Truck Equipment Co.
CONTACT: Jim Fountain
ADDRESS: 1200 South Averill Avenue
Flint, Michigan USA 48503

PHONE: 810-762-0755
FAX: 855-629-4643
EMAIL: jfountain@knapheide.com

QUOTE ID: 93056-6
QUOTE DATE: 12/12/2016
VALID UNTIL: 1/11/2017

SALESPERSON: James Fountain
PHONE: 810-762-1100
FAX: 855-629-4643
EMAIL: jfountain@knapheide.com

QUANTITY	DESCRIPTION	LIST PRICE EACH	EXT. LIST PRICE
	QUOTE 93056-6: MDOT		
1	CONFIGURATION 1-2: MARKE SA Dump Body		
		$21,329.00	$21,329.00
	0% Discount:	$0.00	$0.00
	Dealer Cost:	$21,329.00	$21,329.00
	DESCRIPTION: MKESA2 10ft BODY LENGTH STRAIGHT SIDES 36" SIDE HEIGHT		
	BODY SIZE/SHAPE		
	BODY LENGTH: **10ft BODY LENGTH**		
	SIDE STYLE: **STRAIGHT SIDES**		
	SIDE HEIGHT (FROM FLOOR): **36" SIDE HEIGHT**		
	REAR BODY PROFILE: **STANDARD STRAIGHT VERTICAL GATE**		
	REAR CORNER POSTS: **REAR BOLSTERS 8" ABOVE SIDES**		
	BOARD POCKETS: **2" WIDE BOARD POCKETS**		
	HEADSHEET STYLE: **NONE**		
	HOIST OPTION		
	HOIST TYPE: **TRN MOUNT TELE HOIST W/ SUBFRM, INTERNAL DOGHOUSE**		
	HOIST CYLINDER/MODEL: **MAILHOT CS-SERIES, DOUBLE ACTING, CS90-4.5-3DA**	$4,017.00	$4,017.00
	HYDRAULIC PUMP: **NO FACTORY SUPPLIED HYDRAULIC PUMP**		
	CYLINDER CRADLE STYLE: **STANDARD HOIST CRADLE**		
	INSTALL SUBFRAME AND/OR CYLINDER: **INSTALL CYLINDER AND SUBFRAME AT FACTORY**	$278.00	$278.00
	EXTRA BODY PROP: **EXTRA BODY PROP**	$64.00	$64.00
	HYDRAULIC RESERVOIR: **NO RESERVOIR - DEALER TO SUPPLY**		
	MATERIALS/CONSTRUCTION		
	FLOOR MATERIAL: **1/4" AR400 FLOOR**	$925.00	$925.00
	FLOOR TO SIDE RADIUS: **5" RADIUS FLOOR TO SIDE**	$36.00	$36.00
	LONGSILL MATERIAL: **5" I-BEAM LONGSILLS (STANDARD SKIP WELD)**		
	SIDES/HEADSHEET MATERIAL: **7GA 201SS SIDES/HEAD**	$10,816.00	$10,816.00
	SIDE BRACING TYPE: **SINGLE WELD-ON INTERMEDIATE SIDE BRACE**		
	SIDE BRACE MATERIAL: **10GA 201SS SIDE BRACING**	$351.00	$351.00

HENDERSON

PRODUCTS, INC.

1085 SOUTH THIRD STREET
PO BOX 40, MANCHESTER, IA 52057-0040
PHONE: 563-927-2828

SALES QUOTATION

DATE	PAGE
12/12/2016	2

CUSTOMER: Knapheide Truck Equipment Co.
CONTACT: Jim Fountain
ADDRESS: 1200 South Averill Avenue
Flint, Michigan USA 48503

PHONE: 810-762-0755
FAX: 855-629-4643
EMAIL: jfountain@knapheide.com

QUOTE ID: 93056-6
QUOTE DATE: 12/12/2016
VALID UNTIL: 1/11/2017

SALESPERSON: James Fountain
PHONE: 810-762-1100
FAX: 855-629-4643
EMAIL: jfountain@knapheide.com

QUANTITY	DESCRIPTION	LIST PRICE EACH	EXT. LIST PRICE
	TOP RAIL STYLE: **FLAT (2" FLAT, THEN SLOPED)**	$44.00	$44.00
	CONTOURED FRONT CORNER POSTS: **10GA 201SS FRONT CORNER POSTS**	$329.00	$329.00
	REAR CORNER POST MATERIAL: **7GA 201SS REAR CORNER POSTS**	$284.00	$284.00
	TAILGATE OPTIONS		
	TAILGATE STYLE: **STANDARD TAILGATE**		
	TAILGATE SHEET MATERIAL: **7GA 201SS TAILGATE SHEET**	$522.00	$522.00
	TAILGATE BRACING: **SINGLE HORIZONTAL TAILGATE BRACE**		
	TAILGATE BRACE MATERIAL: **10GA 201SS TAILGATE BRACING**	$567.00	$567.00
	TAILGATE TOP PIVOT HARDWARE: **1-1/2" PINS, 1-1/2" PLATES, GREASABLE**	$71.00	$71.00
	TAILGATE LATCH TYPE: **AIR PANCAKE TAILGATE RELEASE, GREASABLE SS BUSHINGS**	($70.00)	($70.00)
	TAILGATE RELEASE VALVE: **ELECTRIC CONTROL TAILGATE RELEASE VALVE**	$64.00	$64.00
	TAILGATE PIN LANYARDS: **TAILGATE PIVOT PIN LANYARDS**	$52.00	$52.00
	TAILGATE LIFT LOOP: **TAILGATE LIFT LOOP, D-RING, CENTER OUTSIDE (SS)**	$151.00	$151.00
	LATCH JAWS: **LOWER TG LATCH JAWS, GREASABLE**	$107.00	$107.00
	COAL CHUTE: **NO COAL CHUTE**		
	LIGHTING		
	REAR FACE LIGHT HOLES: **NO REAR FACE LIGHT HOLES**		
	REAR SIDE MARKER LIGHT HOLE: **STD 2.5" SIDE MARKERS W/ 2.5" 45 DEGREE**	$54.00	$54.00
	EXTERIOR LIGHT BOXES INSTALLED: **4 HOLE EXT LIGHT BOXES, INSTD ON REAR POSTS (201SS)**	$443.00	$443.00
	LIGHTING PACKAGE: **LED S/T/T, SIDE CLEARANCE MARKERS, (3) ICC W/ SEALED HARNESS**	$164.00	$164.00
	BODY HINGE		
	BODY HINGE CONSTRUCTION: **STD SUBFRAME INTEGRAL HINGE**		
	BODY HINGE TYPE: **GREASABLE HINGE BLOCKS**		
	PAINT		
	PAINT PREPARATION: **SS WASH-NATURAL FINISH, PRIME MILD PARTS (201/304SS BODY)**		

HENDERSON

PRODUCTS, INC.

1085 SOUTH THIRD STREET
PO BOX 40, MANCHESTER, IA 52057-0040
PHONE: 563-927-2828

SALES QUOTATION

DATE	PAGE
12/12/2016	3

CUSTOMER: Knapheide Truck Equipment Co.
CONTACT: Jim Fountain
ADDRESS: 1200 South Averill Avenue
Flint, Michigan USA 48503

PHONE: 810-762-0755
FAX: 855-629-4643
EMAIL: jfountain@knapheide.com

QUOTE ID: 93056-6
QUOTE DATE: 12/12/2016
VALID UNTIL: 1/11/2017

SALESPERSON: James Fountain
PHONE: 810-762-1100
FAX: 855-629-4643
EMAIL: jfountain@knapheide.com

QUANTITY	DESCRIPTION	LIST PRICE EACH	EXT. LIST PRICE
	OPTIONS/ACCESSORIES:		
	CABSHIELD STYLE: **CABSHIELD WITH INTEGRAL TARP SHROUD**		
	CABSHIELD MATERIAL: **10GA W/ 7GA END PLATES (201SS)**		
	CABSHIELD SIZE: **16" X 78" CABSHIELD (1/4 CAB)(W/TARP SHRD)**	$950.00	$950.00
	CABSHIELD MOUNTED LIGHT HOLES: **LIGHT BOX WELDED ON TOP OF CABSHIELD W/ 2 OVALS FORWARD**	$221.00	$221.00
	INSTALL CABSHIELD: **CABSHIELD SHIPPED LOOSE, DEALER TO INSTALL**		
	ASPHALT LIP		
	ASPHALT LIP: **NO ASPHALT LIP**		
	WALK RAILS		
	WALK RAILS: **WALK RAIL INSTALLED ON LOWER RUBRAILS**		
	WALKRAIL MATERIAL: **STAINLESS STEEL WALKRAIL MATERIAL**		
	WALK RAIL TYPE: **3/4" ROUND (304SS)**	$235.00	$235.00
	TARP RAILS		
	TARP RAILS: **TARP RAILS ON BOTH SIDES OF BODY**		
	TARP RAIL MATERIAL: **STAINLESS STEEL TARP RAIL**		
	TARP RAIL TYPE: **3/4" ROUND (304SS)**	$235.00	$235.00
	SIDE LADDERS		
	SIDE LADDERS: **(YES) SIDE LADDER - Pick From List Below**		
	SIDE LADDER MATERIAL: **STAINLESS STEEL LADDER CONSTRUCTION - Pick From List Below**		
	DRIVER'S SIDE FRONT LADDER: **3 STEP PULL OUT LADDER (201SS)**	$419.00	$419.00
	INSTALL DRIVER SIDE FRONT LADDER: **NO, SHIP DRIVERS SIDE FRONT LADDER LOOSE**		
	DRIVER'S SIDE REAR LADDER: **NO DRIVERS SIDE REAR LADDER**		
	CURBSIDE FRONT LADDER: **NO CURBSIDE FRONT LADDER**		
	CURBSIDE REAR LADDER: **NO CURB SIDE REAR LADDER**		
	STEP(S)		
	STEP(S): **NO STEP(S)**		
	GRAB HANDLES		
	GRAB HANDLES: **NO GRAB HANDLES**		

HENDERSON

PRODUCTS, INC.

1085 SOUTH THIRD STREET
PO BOX 40, MANCHESTER, IA 52057-0040
PHONE: 563-927-2828

SALES QUOTATION

DATE	PAGE
12/12/2016	4

CUSTOMER: Knapheide Truck Equipment Co.
CONTACT: Jim Fountain
ADDRESS: 1200 South Averill Avenue
Flint, Michigan USA 48503

PHONE: 810-762-0755
FAX: 855-629-4643
EMAIL: jfountain@knapheide.com

QUOTE ID: 93056-6
QUOTE DATE: 12/12/2016
VALID UNTIL: 1/11/2017

SALESPERSON: James Fountain
PHONE: 810-762-1100
FAX: 855-629-4643
EMAIL: jfountain@knapheide.com

QUANTITY	DESCRIPTION	LIST PRICE EACH	EXT. LIST PRICE
	Options Show Options: **No Additional Options** End Customer: MDOT All options do not have to be picked, quote can be modified, many more options available.		

Quote Total:	$21,329.00
0% Discount:	$0.00
0% Sales Tax:	$0.00
Total Dealer Cost:	$21,329.00

HENDERSON

PRODUCTS, INC.

1085 SOUTH THIRD STREET
PO BOX 40, MANCHESTER, IA 52057-0040
PHONE: 563-927-2828

SALES QUOTATION

DATE	PAGE
12/12/2016	1

CUSTOMER: Knapheide Truck Equipment Co.
CONTACT: Jim Fountain
ADDRESS: 1200 South Averill Avenue
Flint, Michigan USA 48503

PHONE: 810-762-0755
FAX: 855-629-4643
EMAIL: jfountain@knapheide.com

QUOTE ID: 93057-4
QUOTE DATE: 12/12/2016
VALID UNTIL: 1/11/2017

SALESPERSON: James Fountain
PHONE: 810-762-1100
FAX: 855-629-4643
EMAIL: jfountain@knapheide.com

QUANTITY	DESCRIPTION	LIST PRICE EACH	EXT. LIST PRICE
	QUOTE 93057-4: MDOT		
1	CONFIGURATION 1-1: Mark-E Tandem Axle		
		$30,322.00	$30,322.00
	0% Discount:	$0.00	$0.00
	Dealer Cost:	$30,322.00	$30,322.00
	DESCRIPTION: MKETA2 14' BODY LENGTH STRAIGHT SIDES 44" SIDE HEIGHT		
	BODY SIZE/SHAPE		
	Body Length: **14' BODY LENGTH**		
	Side Style: **STRAIGHT SIDES**		
	Side Height (From Floor): **44" SIDE HEIGHT**		
	Rear Body Profile: **STANDARD STRAIGHT VERTICAL GATE**		
	Rear Corner Posts: **REAR BOLSTERS 8" ABOVE SIDES**		
	Board Pockets: **2" WIDE BOARD POCKETS**		
	Headsheet Style: **NONE**		
	HOIST OPTION		
	Hoist Type: **TRN MOUNT TELE, INTERNAL DOGHOUSE**		
	Hoist Cylinder/Model: **MAILHOT CS-SERIES, DOUBLE ACTING, CS130-5.5-3DA**	$4,061.00	$4,061.00
	Hydraulic Pump: **NO FACTORY SUPPLIED HYDRAULIC PUMP**		
	Cylinder Cradle Style: **STANDARD HOIST CRADLE**		
	Install Cylinder: **INSTALL CYLINDER AND CRADLE**	$278.00	$278.00
	Hydraulic Reservoir: **NO RESERVOIR - DEALER TO SUPPLY**		
	MATERIALS/CONSTRUCTION		
	Floor Material: **1/4" AR400 FLOOR**	$1,511.00	$1,511.00
	Floor to Side Radius: **5" RADIUS FLOOR TO SIDE**	$71.00	$71.00
	Longsill Material: **1/4" 201SS FOMED LONGSILLS (8")**	$1,861.00	$1,861.00
	Sides/Headsheet Material Type: **201 GRADE STAINLESS STEEL SIDES/HEADSHEET**		
	Sides/Headsheet Thickness: **7GA 201SS SIDES/HEAD**	$12,105.00	$12,105.00
	Side Bracing Type: **(ONE) WELD-ON INTERMEDIATE SIDE BRACE, EA SIDE**		
	Side Brace Material: **7GA 201SS SIDE BRACING**	$618.00	$618.00
	Top Rail Style: **FLAT (2" FLAT, THEN SLOPED)**	$45.00	$45.00

HENDERSON

PRODUCTS, INC.

1085 SOUTH THIRD STREET
PO BOX 40, MANCHESTER, IA 52057-0040
PHONE: 563-927-2828

SALES QUOTATION

DATE	PAGE
12/12/2016	2

CUSTOMER: Knapheide Truck Equipment Co.
CONTACT: Jim Fountain
ADDRESS: 1200 South Averill Avenue
Flint, Michigan USA 48503

PHONE: 810-762-0755
FAX: 855-629-4643
EMAIL: jfountain@knapheide.com

QUOTE ID: 93057-4
QUOTE DATE: 12/12/2016
VALID UNTIL: 1/11/2017

SALESPERSON: James Fountain
PHONE: 810-762-1100
FAX: 855-629-4643
EMAIL: jfountain@knapheide.com

QUANTITY	DESCRIPTION	LIST PRICE EACH	EXT. LIST PRICE
	Top Rail Material: **7GA 201SS TOP RAIL**	$621.00	$621.00
	Rub Rail Material: **7GA 201SS RUB RAIL**	$767.00	$767.00
	Contoured Front Corner Posts: **7GA 201SS FRONT CORNER POSTS**	$348.00	$348.00
	Rear Corner Post Material: **1/4" 201SS REAR CORNER POSTS**	$466.00	$466.00
	TAILGATE OPTIONS		
	Tailgate Style: **STANDARD TAILGATE**		
	Tailgate Sheet Material: **7GA 201SS TAILAGTE SHEET**	$633.00	$633.00
	Tailgate Bracing: **(ONE) INTERMEDIATE HORIZONTAL TAILGATE BRACE**		
	Tailgate Material: **10GA 201SS TAILGATE BRACING**	$569.00	$569.00
	Tailgate Top Pivot Hardware: **1-1/2" PINS, 1.5" BUSHING, GREASEABLE PINS**	$253.00	$253.00
	Tailgate Latch Type: **AIR PANCAKE TAILGATE RELEASE, GREASABLE SS BUSHINGS**	($70.00)	($70.00)
	Tailgate Release Valve: **ELECTRIC CONTROL TAILGATE RELEASE VALVE**	$64.00	$64.00
	Tailgate Pin Lanyards: **TAILGATE PIVOT PIN LANYARDS**	$52.00	$52.00
	Tailgate Lift Loop: **TAILGATE LIFT LOOP, D-RING, CENTER OUTSIDE (SS)**	$149.00	$149.00
	Latch Jaws: **LOWER TG LATCH JAWS, GREASABLE**	$107.00	$107.00
	Coal Chute: **NO COAL CHUTE**		
	LIGHTING		
	Rear Face Light Holes: **NO REAR FACE LIGHT HOLES**		
	Rear Side Marker Light Hole: **STD 2.5" SIDE MARKERS W/ 2.5" 45 DEGREE**	$54.00	$54.00
	Rub Rail Marker Light Hole: **2.5" FRONT MARKER LIGHT HOLE-SLOPED 60 DEGREES**	$27.00	$27.00
	Exterior Light Boxes Installed: **4 HOLE EXT LIGHT BOXES, INSTD ON REAR POSTS (201SS)**	$450.00	$450.00
	Lighting Package: **LED S/T/T, SIDE CLEARANCE MARKERS, (3) ICC W/ SEALED HARNESS**	$164.00	$164.00
	BODY HINGE		
	Body Hinge Construction: **STD 8" X 6" X 1/2" REAR HINGE ANGLE**		

HENDERSON

PRODUCTS, INC.

1085 SOUTH THIRD STREET
PO BOX 40, MANCHESTER, IA 52057-0040
PHONE: 563-927-2828

SALES QUOTATION

DATE	PAGE
12/12/2016	3

CUSTOMER: Knapheide Truck Equipment Co.
CONTACT: Jim Fountain
ADDRESS: 1200 South Averill Avenue
Flint, Michigan USA 48503

PHONE: 810-762-0755
FAX: 855-629-4643
EMAIL: jfountain@knapheide.com

QUOTE ID: 93057-4
QUOTE DATE: 12/12/2016
VALID UNTIL: 1/11/2017

SALESPERSON: James Fountain
PHONE: 810-762-1100
FAX: 855-629-4643
EMAIL: jfountain@knapheide.com

QUANTITY	DESCRIPTION	LIST PRICE EACH	EXT. LIST PRICE
	Body Hinge Type: **GREASABLE HINGE BLOCKS**		
	PAINT		
	Paint Preparation: **SS WASH-NATURAL FINISH, PRIME MILD PARTS (201/304SS BODY)**		
	OPTIONS/ACCESSORIES		
	Cabshield Style: **STANDARD WELD ON CABSHIELD**		
	Cabshield Material: **7GA W/ 7GA END PLATES (201SS)**		
	Cabshield Size: **16" X 78" CABSHIELD (1/4 CAB)**	$748.00	$748.00
	Cabshield Mounted Light Holes: **FOUR OVALS, (1) FACING EACH SIDE, (2) FACING FORWARD**	$103.00	$103.00
	Install Cabshield: **CABSHIELD SHIPPED LOOSE, DEALER TO INSTALL**		
	ASPHALT LIP		
	Asphalt Lip: **NO ASPHALT LIP**		
	WALK RAILS		
	Walk Rails: **WALK RAIL INSTALLED ON LOWER RUBRAILS**		
	Walk Rail Material: **STAINLESS STEEL WALKRAIL MATERIAL**		
	Walk Rail Type: **3/4" ROUND (304SS)**	$334.00	$334.00
	TARP RAILS		
	Tarp Rails: **TARP RAILS ON BOTH SIDES OF BODY**		
	Tarp Rail Material: **STAINLESS STEEL TARP RAIL**		
	Tarp Rail Type: **3/4" ROUND (304SS)**	$334.00	$334.00
	SIDE LADDERS		
	Side Ladders: **(YES) SIDE LADDER, Pick From List Below**		
	Side Ladder Material: **STAINLESS STEEL LADDER CONSTRUCTION**		
	Driver's Side Front Ladder: **3 STEP PULL OUT LADDER (201SS)**	$279.00	$279.00
	Install Driver Side Front Ladder: **NO, SHIP DRIVERS SIDE FRONT LADDER LOOSE**		
	Driver's Side Rear Ladder: **NO DRIVER'S SIDE REAR LADDER**		
	Curbside Front Ladder: **NO CURBSIDE FRONT LADDER**		
	Curbside Rear Ladder: **NO CURB SIDE REAR LADDER**		
	STEP(S)		
	Body Step Options: **1-1/2" GRIP STRUT STEP(S) (304SS) (SELECT LOCATION BELOW)**		

HENDERSON

PRODUCTS, INC.

1085 SOUTH THIRD STREET
PO BOX 40, MANCHESTER, IA 52057-0040
PHONE: 563-927-2828

SALES QUOTATION

DATE	PAGE
12/12/2016	4

CUSTOMER: Knapheide Truck Equipment Co.
CONTACT: Jim Fountain
ADDRESS: 1200 South Averill Avenue
Flint, Michigan USA 48503

PHONE: 810-762-0755
FAX: 855-629-4643
EMAIL: jfountain@knapheide.com

QUOTE ID: 93057-4
QUOTE DATE: 12/12/2016
VALID UNTIL: 1/11/2017

SALESPERSON: James Fountain
PHONE: 810-762-1100
FAX: 855-629-4643
EMAIL: jfountain@knapheide.com

QUANTITY	DESCRIPTION	LIST PRICE EACH	EXT. LIST PRICE
	Driver's Side Front Step(s): **ONE STEP INSIDE BODY AND ONE STEP OUTSIDE BODY**	$111.00	$111.00
	Driver's Side Rear Step(s): **NO DRIVERS SIDE REAR STEP(S) INSTALLED**		
	Curbside Front Step(s): **NO CURBSIDE FRONT STEP(S) INSTALLED**		
	Curbside Rear Step(s): **NO CURBSIDE REAR STEP(S) INSTALLED**		
	Step Quantity, Shipped Loose: **NO STEPS, SHIPPED LOOSE**		
	GRAB HANDLES		
	Grab Handles: **GRAB HANDLE, DRIVERS SIDE FRONT**	$56.00	$56.00
	Options		
	Show Options: **Show Options**		
	SIDEBOARDS		
	Sideboards: **YES, SLOPED SIDEBOARDS**		
	Sideboard Side Material: **7GA 201SS SIDEBOARD SIDE MATERIAL**	$1,646.00	$1,646.00
	Sideboard Toprail Material: **7GA 201SS SIDEBOARD TOP RAIL**	$549.00	$549.00
	Sideboard Top Rail Profile: **SIDEBOARD TOP RAIL PROFILE SLOPED**		
	Sideboard Installation: **SIDEBOARDS SHIPPED LOOSE, NO INSTALLATION AT FACTORY**		
	RUBBER MOUNTING PADS		
	Rubber Mounting Pads: **YES, RUBBER MOUNTING PADS**	$589.00	$589.00
	VIBRATOR MOUNTING PAD		
	Vibrator Mounting Pad: **VIBRATOR MOUNTING PAD, BETWEEN LONGSILLS (MILD)**	$118.00	$118.00
	REAR APRON FILLER PLATE (FOR TGS SANDER)		
	Rear Apron Filler Plate (for TGS Sander): **REAR APRON FILLER PLATE FOR TGS**	$251.00	$251.00
	INSTALL TGS SPREADER		
	Install TGS Spreader: **NO TGS INSTALL**		
	HEATED BODY		
	Heated Body: **NO HEATED BODY OPTION**		

HENDERSON

PRODUCTS, INC.

1085 SOUTH THIRD STREET
PO BOX 40, MANCHESTER, IA 52057-0040
PHONE: 563-927-2828

SALES QUOTATION

DATE	PAGE
12/12/2016	5

CUSTOMER: Knapheide Truck Equipment Co.
CONTACT: Jim Fountain
ADDRESS: 1200 South Averill Avenue
Flint, Michigan USA 48503

PHONE: 810-762-0755
FAX: 855-629-4643
EMAIL: jfountain@knapheide.com

QUOTE ID: 93057-4
QUOTE DATE: 12/12/2016
VALID UNTIL: 1/11/2017

SALESPERSON: James Fountain
PHONE: 810-762-1100
FAX: 855-629-4643
EMAIL: jfountain@knapheide.com

QUANTITY	DESCRIPTION	LIST PRICE EACH	EXT. LIST PRICE
	CRADLE MOUNT TOOLBOX Cradle Mount Toolbox: **NO TRIANGULAR CRDL MOUNT TOOLBOX (SLOPED HEAD P2P ONLY)** **TOOLBOX (BODY INTEGRAL)** Toolbox (Body Integral): **NO INTEGRAL BODY TOOLBOX** End Customer: MDOT All options do not have to be picked, quote can be modified, many more options available.		

Quote Total:	$30,322.00
0% Discount:	$0.00
0% Sales Tax:	$0.00
Total Dealer Cost:	$30,322.00

HENDERSON

PRODUCTS, INC.

1085 SOUTH THIRD STREET
PO BOX 40, MANCHESTER, IA 52057-0040
PHONE: 563-927-2828

SALES QUOTATION

DATE	PAGE
12/12/2016	1

CUSTOMER: Knapheide Truck Equipment Co.
CONTACT: Jim Fountain
ADDRESS: 1200 South Averill Avenue
Flint, Michigan USA 48503

PHONE: 810-762-0755
FAX: 855-629-4643
EMAIL: jfountain@knapheide.com

QUOTE ID: 93054-4
QUOTE DATE: 12/12/2016
VALID UNTIL: 1/11/2017

SALESPERSON: James Fountain
PHONE: 810-762-1100
FAX: 855-629-4643
EMAIL: jfountain@knapheide.com

QUANTITY	DESCRIPTION	LIST PRICE EACH	EXT. LIST PRICE
	QUOTE 93054-4: MDOT		
1	CONFIGURATION 1-1: Mark III utility sized single axle dump body	$12,960.00	$12,960.00
	0% Discount:	$0.00	$0.00
	Dealer Cost:	$12,960.00	$12,960.00
	DESCRIPTION: DB3 9' body length 13" side height / 19" tailgate height 2.5/3.7 yd Telescopic hoist, trunion mount		
	Body Size / Style		
	Body Length: **9' body length**		
	Side / Tailgate Height: **13" side height / 19" tailgate height 2.5/3.7 yd**		
	Hoist Type: **Telescopic hoist, trunion mount**	$6,039.00	$6,039.00
	Hydraulics		
	Hoist Cylinder: **CS 85-4.5-3 double acting cylinder ILO standard**	$1,678.00	$1,678.00
	Install Cylinder and Subframe: **Yes**	$331.00	$331.00
	Pump Pack: **Double acting electric/hydraulic pump pack**	$342.00	$342.00
	Sides / Ends / Floor		
	Side Construction: **Single Wall 10 ga Quick Release FOLD DOWN Sides**	$891.00	$891.00
	Optional Sides/Ends Materials: **201SS sides and ends**	$2,250.00	$2,250.00
	Optional Floor Materials: **3/16" AR400 floor ILO std grade 50**	$716.00	$716.00
	Tailgate Options		
	Tailgate Style: **Quick Release handle in Center of Tailgate**	$196.00	$196.00
	Light Options		
	Front Amber Marker Lights: **Shipped Loose(Includes one-piece wiring harness)**	$62.00	$62.00
	LED Light Kit ILO Standard: **Shipped Loose(Includes one-piece wiring harness)**	$210.00	$210.00
	Cabshield Options		
	Headsheet Type: **Straight headsheet with integral 50" cabshield clearance**		

HENDERSON

PRODUCTS, INC.

1085 SOUTH THIRD STREET
PO BOX 40, MANCHESTER, IA 52057-0040
PHONE: 563-927-2828

SALES QUOTATION

DATE	PAGE
12/12/2016	2

CUSTOMER: Knapheide Truck Equipment Co.
CONTACT: Jim Fountain
ADDRESS: 1200 South Averill Avenue
Flint, Michigan USA 48503

PHONE: 810-762-0755
FAX: 855-629-4643
EMAIL: jfountain@knapheide.com

QUOTE ID: 93054-4
QUOTE DATE: 12/12/2016
VALID UNTIL: 1/11/2017

SALESPERSON: James Fountain
PHONE: 810-762-1100
FAX: 855-629-4643
EMAIL: jfountain@knapheide.com

QUANTITY	DESCRIPTION	LIST PRICE EACH	EXT. LIST PRICE
	Custom Options Option 1: **SS three hole light wedges on rear corner posts**	$245.00	$245.00
	End Customer: MDOT		

Quote Total:	$12,960.00
0% Discount:	$0.00
0% Sales Tax:	$0.00
Total Dealer Cost:	$12,960.00

HENDERSON

PRODUCTS, INC.

1085 SOUTH THIRD STREET
PO BOX 40, MANCHESTER, IA 52057-0040
PHONE: 563-927-2828

SALES QUOTATION

DATE	PAGE
12/12/2016	1

CUSTOMER: Knapheide Truck Equipment Co.
CONTACT: Jim Fountain
ADDRESS: 1200 South Averill Avenue
Flint, Michigan USA 48503

PHONE: 810-762-0755
FAX: 855-629-4643
EMAIL: jfountain@knapheide.com

QUOTE ID: 93055-4
QUOTE DATE: 12/12/2016
VALID UNTIL: 1/11/2017

SALESPERSON: James Fountain
PHONE: 810-762-1100
FAX: 855-629-4643
EMAIL: jfountain@knapheide.com

QUANTITY	DESCRIPTION	LIST PRICE EACH	EXT. LIST PRICE
	QUOTE 93055-4: MDOT		
1	CONFIGURATION 1-1: Mark III utility sized single axle dump body	$13,682.00	$13,682.00
	0% Discount:	$0.00	$0.00
	Dealer Cost:	$13,682.00	$13,682.00
	DESCRIPTION: DB3 9' body length 18" side height / 24" tailgate height 3.5/4.7 yd Telescopic hoist, trunion mount		
	Body Size / Style		
	Body Length: **9' body length**		
	Side / Tailgate Height: **18" side height / 24" tailgate height 3.5/4.7 yd**		
	Hoist Type: **Telescopic hoist, trunion mount**	$6,358.00	$6,358.00
	Hydraulics		
	Hoist Cylinder: **CS 85-4.5-3 double acting cylinder ILO standard**	$1,678.00	$1,678.00
	Install Cylinder and Subframe: **Yes**	$331.00	$331.00
	Pump Pack: **Double acting electric/hydraulic pump pack**	$342.00	$342.00
	Sides / Ends / Floor		
	Side Construction: **Single Wall 10 ga Quick Release FOLD DOWN Sides**	$891.00	$891.00
	Optional Sides/Ends Materials: **201SS sides and ends**	$2,653.00	$2,653.00
	Optional Floor Materials: **3/16" AR400 floor ILO std grade 50**	$716.00	$716.00
	Tailgate Options		
	Tailgate Style: **Quick Release handle in Center of Tailgate**	$196.00	$196.00
	Light Options		
	Front Amber Marker Lights: **Shipped Loose(Includes one-piece wiring harness)**	$62.00	$62.00
	LED Light Kit ILO Standard: **Shipped Loose(Includes one-piece wiring harness)**	$210.00	$210.00
	Cabshield Options		
	Headsheet Type: **Straight headsheet with integral 50" cabshield clearance**		

HENDERSON

PRODUCTS, INC.

1085 SOUTH THIRD STREET
PO BOX 40, MANCHESTER, IA 52057-0040
PHONE: 563-927-2828

SALES QUOTATION

DATE	PAGE
12/12/2016	2

CUSTOMER: Knapheide Truck Equipment Co.
CONTACT: Jim Fountain
ADDRESS: 1200 South Averill Avenue
Flint, Michigan USA 48503

PHONE: 810-762-0755
FAX: 855-629-4643
EMAIL: jfountain@knapheide.com

QUOTE ID: 93055-4
QUOTE DATE: 12/12/2016
VALID UNTIL: 1/11/2017

SALESPERSON: James Fountain
PHONE: 810-762-1100
FAX: 855-629-4643
EMAIL: jfountain@knapheide.com

QUANTITY	DESCRIPTION	LIST PRICE EACH	EXT. LIST PRICE
	Custom Options Option 1: **SS three hole light wedges on rear corner posts**	$245.00	$245.00
	End Customer: MDOT		

Quote Total:	$13,682.00
0% Discount:	$0.00
0% Sales Tax:	$0.00
Total Dealer Cost:	$13,682.00

HENDERSON

PRODUCTS, INC.

1085 SOUTH THIRD STREET
PO BOX 40, MANCHESTER, IA 52057-0040
PHONE: 563-927-2828

SALES QUOTATION

DATE	PAGE
12/12/2016	1

CUSTOMER: Knapheide Truck Equipment Co.
CONTACT: Jim Fountain
ADDRESS: 1200 South Averill Avenue
Flint, Michigan USA 48503

PHONE: 810-762-0755
FAX: 855-629-4643
EMAIL: jfountain@knapheide.com

QUOTE ID: 93041-5
QUOTE DATE: 12/12/2016
VALID UNTIL: 1/11/2017

SALESPERSON: James Fountain
PHONE: 810-762-1100
FAX: 855-629-4643
EMAIL: jfountain@knapheide.com

QUANTITY	DESCRIPTION	LIST PRICE EACH	EXT. LIST PRICE
	QUOTE 93041-5: MDOT		
1	CONFIGURATION 1-1: One-way snow plow		
		$15,920.00	$15,920.00
	0% Discount:	$0.00	$0.00
	Dealer Cost:	$15,920.00	$15,920.00
	DESCRIPTION: OWP Two adjustable slotted trip assemblies, one center roller 12' length 39" input height, 64" discharge height		
	Plow Size/Shape		
	Trip Option: **Two adjustable slotted trip assemblies, one center roller**		
	Plow Length: **12' length**		
	Moldboard Height: **39" input height, 64" discharge height**	$7,411.00	$7,411.00
	Moldboard Options		
	Moldboard Sheet Material: **7 GA 201SS ILO 10 GA GR50 steel**	$2,639.00	$2,639.00
	Hitches		
	Hitch, Plow Portion: **34" Husting hitch**	$1,091.00	$1,091.00
	Plow Portion Installed on Plow: **Yes**		
	Roller Kit for Husting Hitch: **Yes, shipped loose**	$465.00	$465.00
	Hitch, Truck Portion: **34" Husting hitch**	$1,348.00	$1,348.00
	Hydraulic Lift Cylinders, Truck Portion: **4" x 2" x 10" nitrided lift cylinder**	$79.00	$79.00
	Connect Under Pressure 100, Truck Portion: **CUP-100, 4 - 6 ports**	$821.00	$821.00
	Bumper to Frame Mounting Kit: **Yes**	$385.00	$385.00
	Options/Accessories		
	12" Rubber Deflector: **Yes, w/ SS Backer**	$388.00	$388.00
	Install Rubber Deflector: **Yes**	$101.00	$101.00
	36" Plastic Side Markers, Pair: **Yes**	$41.00	$41.00
	Cutting Edge With Steel Cover Plate: **Carbide cutting edge**	$1,030.00	$1,030.00
	Curb Guard, Each Installed: **Wrap around curb guard**	$121.00	$121.00
	End Customer: MDOT		

Quote Total:	$15,920.00
0% Discount:	$0.00
0% Sales Tax:	$0.00
Total Dealer Cost:	$15,920.00

HENDERSON

PRODUCTS, INC.

1085 SOUTH THIRD STREET
PO BOX 40, MANCHESTER, IA 52057-0040
PHONE: 563-927-2828

SALES QUOTATION

DATE	PAGE
12/12/2016	1

CUSTOMER: Knapheide Truck Equipment Co.
CONTACT: Jim Fountain
ADDRESS: 1200 South Averill Avenue
Flint, Michigan USA 48503

PHONE: 810-762-0755
FAX: 855-629-4643
EMAIL: jfountain@knapheide.com

QUOTE ID: 93040-4
QUOTE DATE: 12/12/2016
VALID UNTIL: 1/11/2017

SALESPERSON: James Fountain
PHONE: 810-762-1100
FAX: 855-629-4643
EMAIL: jfountain@knapheide.com

QUANTITY	DESCRIPTION	LIST PRICE EACH	EXT. LIST PRICE
	QUOTE 93040-4: MDOT		
1	CONFIGURATION 1-1: One-way snow plow		
		$15,088.00	$15,088.00
	0% Discount:	$0.00	$0.00
	Dealer Cost:	$15,088.00	$15,088.00
	DESCRIPTION: OWP Two adjustable slotted trip assemblies, one center roller 12' length 29" input height, 54" discharge height		
	Plow Size/Shape		
	Trip Option: **Two adjustable slotted trip assemblies, one center roller**		
	Plow Length: **12' length**		
	Moldboard Height: **29" input height, 54" discharge height**	$7,075.00	$7,075.00
	Moldboard Options		
	Moldboard Sheet Material: **7 GA 201SS ILO 10 GA GR50 steel**	$2,143.00	$2,143.00
	Hitches		
	Hitch, Plow Portion: **34" Husting hitch**	$1,091.00	$1,091.00
	Plow Portion Installed on Plow: **Yes**		
	Roller Kit for Husting Hitch: **Yes, shipped loose**	$465.00	$465.00
	Hitch, Truck Portion: **34" Husting hitch**	$1,348.00	$1,348.00
	Hydraulic Lift Cylinders, Truck Portion: **4" x 2" x 10" nitrided lift cylinder**	$79.00	$79.00
	Connect Under Pressure 100, Truck Portion: **CUP-100, 4 - 6 ports**	$821.00	$821.00
	Bumper to Frame Mounting Kit: **Yes**	$385.00	$385.00
	Options/Accessories		
	12" Rubber Deflector: **Yes, w/ SS Backer**	$388.00	$388.00
	Install Rubber Deflector: **Yes**	$101.00	$101.00
	36" Plastic Side Markers, Pair: **Yes**	$41.00	$41.00
	Cutting Edge With Steel Cover Plate: **Carbide cutting edge**	$1,030.00	$1,030.00
	Curb Guard, Each Installed: **Wrap around curb guard**	$121.00	$121.00
	End Customer: MDOT		

Quote Total:	$15,088.00
0% Discount:	$0.00
0% Sales Tax:	$0.00
Total Dealer Cost:	$15,088.00

HENDERSON

PRODUCTS, INC.

1085 SOUTH THIRD STREET
PO BOX 40, MANCHESTER, IA 52057-0040
PHONE: 563-927-2828

SALES QUOTATION

DATE	PAGE
12/12/2016	1

CUSTOMER: Knapheide Truck Equipment Co.
CONTACT: Jim Fountain
ADDRESS: 1200 South Averill Avenue
Flint, Michigan USA 48503

PHONE: 810-762-0755
FAX: 855-629-4643
EMAIL: jfountain@knapheide.com

QUOTE ID: 93050-4
QUOTE DATE: 12/12/2016
VALID UNTIL: 1/11/2017

SALESPERSON: James Fountain
PHONE: 810-762-1100
FAX: 855-629-4643
EMAIL: jfountain@knapheide.com

QUANTITY	DESCRIPTION	LIST PRICE EACH	EXT. LIST PRICE
	QUOTE 93050-4: MDOT		
1	CONFIGURATION 1-1: PWS liquid pre-wetting system		
		$6,549.00	$6,549.00
	0% Discount:	$0.00	$0.00
	Dealer Cost:	$6,549.00	$6,549.00
	DESCRIPTION: PWS V-box spreader Full Size V-Box 10-13FT Long Hydrualic Powered Pump		
	Power Source		
	Power Source: **Hydrualic Powered Pump**		
	Application		
	Application: **V-box spreader**	$1,387.00	$1,387.00
	Product Size: **Full Size V-Box 10-13FT Long**		
	Control Box		
	Control Box: **Std Manual Control Valve uses Conveyor Exhaust Oil**	$987.00	$987.00
	Pump: **Upgraded Pump Rated at 8.2 GPM**	$158.00	$158.00
	In Cab Console		
	Console: **None-Deduct PWSH-I Console**	($151.00)	($151.00)
	Tank(s) Capacity		
	Tank Size: **(2) 200 Gal Poly Tanks w/plumb & HW Requires 24" Bracing**	$1,735.00	$1,735.00
	Applicators/Nozzles		
	Spray Assembly: **Std Variable Displacement Nozzle Assembly**		
	Optional Equipment		
	Prewet Installed: **Installation on FSH**	$453.00	$453.00
	Mounting Hardware: **304SS frame mount hardware for FSH**	$803.00	$803.00
	Flush Kit: **System flush kit**	$77.00	$77.00
	Custom Options		
	Option 1: **SS Slurry tube under inverted V**		
		$1,100.00	$1,100.00
	End Customer: MDOT		

Quote Total:	$6,549.00
0% Discount:	$0.00
0% Sales Tax:	$0.00
Total Dealer Cost:	$6,549.00

HENDERSON

PRODUCTS, INC.

1085 SOUTH THIRD STREET
PO BOX 40, MANCHESTER, IA 52057-0040
PHONE: 563-927-2828

SALES QUOTATION

DATE	PAGE
12/12/2016	1

CUSTOMER: Knapheide Truck Equipment Co.
CONTACT: Jim Fountain
ADDRESS: 1200 South Averill Avenue
Flint, Michigan USA 48503

PHONE: 810-762-0755
FAX: 855-629-4643
EMAIL: jfountain@knapheide.com

QUOTE ID: 93051-4
QUOTE DATE: 12/12/2016
VALID UNTIL: 1/11/2017

SALESPERSON: James Fountain
PHONE: 810-762-1100
FAX: 855-629-4643
EMAIL: jfountain@knapheide.com

QUANTITY	DESCRIPTION	LIST PRICE EACH	EXT. LIST PRICE
	QUOTE 93051-4: MDOT		
1	CONFIGURATION 1-1: PWS liquid pre-wetting system		
		$7,876.00	$7,876.00
	0% Discount:	$0.00	$0.00
	Dealer Cost:	$7,876.00	$7,876.00
	DESCRIPTION: PWS V-box spreader Full Size V-Box 14FT Long or Longer Hydrualic Powered Pump		
	Power Source		
	Power Source: **Hydrualic Powered Pump**		
	Application		
	Application: **V-box spreader**	$1,387.00	$1,387.00
	Product Size: **Full Size V-Box 14FT Long or Longer**		
	Control Box		
	Control Box: **Std Manual Control Valve uses Conveyor Exhaust Oil**	$987.00	$987.00
	Pump: **Upgraded Pump Rated at 8.2 GPM**	$158.00	$158.00
	In Cab Console		
	Console: **None-Deduct PWSH-I Console**	($151.00)	($151.00)
	Tank(s) Capacity		
	Tank Size: **(2) 400 Gal Poly Tanks w/plumb & HW Requires 24" Bracing**	$2,961.00	$2,961.00
	Applicators/Nozzles		
	Spray Assembly: **Std Variable Displacement Nozzle Assembly**		
	Optional Equipment		
	Prewet Installed: **Installation on FSH**	$453.00	$453.00
	Mounting Hardware: **304 Stainless Mounts MAY REQUIRE VBOX MOD For Some Apps**	$2,004.00	$2,004.00
	Flush Kit: **System flush kit**	$77.00	$77.00
	End Customer: MDOT		

Quote Total:	$7,876.00
0% Discount:	$0.00
0% Sales Tax:	$0.00
Total Dealer Cost:	$7,876.00

HENDERSON

PRODUCTS, INC.

1085 SOUTH THIRD STREET
PO BOX 40, MANCHESTER, IA 52057-0040
PHONE: 563-927-2828

SALES QUOTATION

DATE	PAGE
12/12/2016	1

CUSTOMER: Knapheide Truck Equipment Co.
CONTACT: Jim Fountain
ADDRESS: 1200 South Averill Avenue
Flint, Michigan USA 48503

PHONE: 810-762-0755
FAX: 855-629-4643
EMAIL: jfountain@knapheide.com

QUOTE ID: 93038-5
QUOTE DATE: 12/12/2016
VALID UNTIL: 1/11/2017

SALESPERSON: James Fountain
PHONE: 810-762-1100
FAX: 855-629-4643
EMAIL: jfountain@knapheide.com

QUANTITY	DESCRIPTION	LIST PRICE EACH	EXT. LIST PRICE
	QUOTE 93038-5: MDOT		
1	CONFIGURATION 1-2: Reversible snow plow		
		$15,659.00	$15,659.00
	0% Discount:	$0.00	$0.00
	Dealer Cost:	$15,659.00	$15,659.00
	DESCRIPTION: RSP 10' length Adjustable cutting edge trip - torsion spring Heavy Duty Outboard Cylinders Type		
	Plow Size/Shape		
	Plow Length: **10' length**		
	Moldboard Trip: **Adjustable cutting edge trip - torsion spring**	$1,570.00	$1,570.00
	Pushframe Type: **Heavy Duty Outboard Cylinders Type**	$1,948.00	$1,948.00
	Moldboard Height: **36" height**	$5,600.00	$5,600.00
	Moldboard Shield: **Integral shield**	$190.00	$190.00
	Moldboard Options		
	Moldboard Sheet Material: **10GA 304SS steel ILO GR50 steel**	$1,010.00	$1,010.00
	Moldboard Cut-Out / Ears: **Mailbox cutout on right side of moldboard**	$335.00	$335.00
	Adjustable Trip Spring: **Adjustable cutting edge trip springs**		
	Hydraulic Cylinders: **3" x 16" single acting nitrided reversing cylinders**		
	Paint: **Front Unpainted, Back Orange**		
	Running Gear		
	Running Gear Type: **None**		
	Options/Accessories		
	12" Rubber Deflector: **Yes, w/ SS Backer**	$387.00	$387.00
	Install Rubber Deflector: **Yes**	$108.00	$108.00
	36" Plastic Side Markers, Pair: **Yes**	$43.00	$43.00
	Parking Jack, Screw Adjustable: **Yes**	$88.00	$88.00
	Install Parking Jack: **Yes**	$49.00	$49.00
	Cutting Edge: **1-1/2" x 10" Rubber cutting edge with cover blade**	$275.00	$275.00
	Squeegee Option: **None**		

HENDERSON

PRODUCTS, INC.

1085 SOUTH THIRD STREET
PO BOX 40, MANCHESTER, IA 52057-0040
PHONE: 563-927-2828

SALES QUOTATION

DATE	PAGE
12/12/2016	2

CUSTOMER: Knapheide Truck Equipment Co.
CONTACT: Jim Fountain
ADDRESS: 1200 South Averill Avenue
Flint, Michigan USA 48503

PHONE: 810-762-0755
FAX: 855-629-4643
EMAIL: jfountain@knapheide.com

QUOTE ID: 93038-5
QUOTE DATE: 12/12/2016
VALID UNTIL: 1/11/2017

SALESPERSON: James Fountain
PHONE: 810-762-1100
FAX: 855-629-4643
EMAIL: jfountain@knapheide.com

QUANTITY	DESCRIPTION	LIST PRICE EACH	EXT. LIST PRICE
	Curb Guard, Installed: **Double Wrap around curb guards**	$255.00	$255.00
	Moldboard Shoes, Pair Installed: **Yes**	$294.00	$294.00
	Hitches		
	Hitch, Plow Portion: **Quick hitch**	$923.00	$923.00
	Plow Portion Installed on Plow: **Yes**		
	Hitch, Truck Portion: **Quick hitch, low profile**	$1,252.00	$1,252.00
	Quick Hitch Width: **30.5" center-to-center width**		
	Hydraulic Lift Cylinders, Truck Portion: **4" x 2" x 10" Nitrided Lift Cylinder**	$82.00	$82.00
	Connect Under Pressure 100, Truck Portion: **CUP-100, 4 - 6 ports**	$853.00	$853.00
	Bumper to Frame Mounting Kit: **Yes**	$397.00	$397.00
	End Customer: MDOT		

Quote Total:	$15,659.00
0% Discount:	$0.00
0% Sales Tax:	$0.00
Total Dealer Cost:	$15,659.00

HENDERSON

PRODUCTS, INC.

1085 SOUTH THIRD STREET
PO BOX 40, MANCHESTER, IA 52057-0040
PHONE: 563-927-2828

SALES QUOTATION

DATE	PAGE
12/12/2016	1

CUSTOMER: Knapheide Truck Equipment Co.
CONTACT: Jim Fountain
ADDRESS: 1200 South Averill Avenue
Flint, Michigan USA 48503

PHONE: 810-762-0755
FAX: 855-629-4643
EMAIL: jfountain@knapheide.com

QUOTE ID: 93039-4
QUOTE DATE: 12/12/2016
VALID UNTIL: 1/11/2017

SALESPERSON: James Fountain
PHONE: 810-762-1100
FAX: 855-629-4643
EMAIL: jfountain@knapheide.com

QUANTITY	DESCRIPTION	LIST PRICE EACH	EXT. LIST PRICE
	QUOTE 93039-4: MDOT		
1	CONFIGURATION 1-1: Reversible snow plow		
		$15,723.00	$15,723.00
	0% Discount:	$0.00	$0.00
	Dealer Cost:	$15,723.00	$15,723.00
	DESCRIPTION: RSP 11' length Adjustable cutting edge trip - torsion spring Heavy Duty Outboard Cylinders Type		
	Plow Size/Shape		
	Plow Length: **11' length**		
	Moldboard Trip: **Adjustable cutting edge trip - torsion spring**	$1,570.00	$1,570.00
	Pushframe Type: **Heavy Duty Outboard Cylinders Type**	$1,948.00	$1,948.00
	Moldboard Height: **42" height**	$5,761.00	$5,761.00
	Moldboard Shield: **Integral shield**	$190.00	$190.00
	Moldboard Options		
	Moldboard Sheet Material: **10GA 304SS steel ILO GR50 steel**	$1,010.00	$1,010.00
	Moldboard Cut-Out / Ears: **Mailbox cutout on right side of moldboard**	$335.00	$335.00
	Adjustable Trip Spring: **Adjustable cutting edge trip springs**		
	Hydraulic Cylinders: **3" x 16" single acting nitrided reversing cylinders**		
	Paint: **Front Unpainted, Back Orange**		
	Running Gear		
	Running Gear Type: **None**		
	Wheels / Tires, Pair Installed: **None**		
	Options/Accessories		
	12" Rubber Deflector: **Yes, w/ SS Backer**	$387.00	$387.00
	Install Rubber Deflector: **Yes**	$108.00	$108.00
	Parking Jack, Screw Adjustable: **Yes**	$88.00	$88.00
	Install Parking Jack: **Yes**	$49.00	$49.00
	Cutting Edge: **1-1/2" x 10" Rubber cutting edge with cover blade**	$303.00	$303.00
	Squeegee Option: **None**		

HENDERSON

PRODUCTS, INC.

1085 SOUTH THIRD STREET
PO BOX 40, MANCHESTER, IA 52057-0040
PHONE: 563-927-2828

SALES QUOTATION

DATE	PAGE
12/12/2016	2

CUSTOMER: Knapheide Truck Equipment Co.
CONTACT: Jim Fountain
ADDRESS: 1200 South Averill Avenue
Flint, Michigan USA 48503

PHONE: 810-762-0755
FAX: 855-629-4643
EMAIL: jfountain@knapheide.com

QUOTE ID: 93039-4
QUOTE DATE: 12/12/2016
VALID UNTIL: 1/11/2017

SALESPERSON: James Fountain
PHONE: 810-762-1100
FAX: 855-629-4643
EMAIL: jfountain@knapheide.com

QUANTITY	DESCRIPTION	LIST PRICE EACH	EXT. LIST PRICE
	Curb Guard, Installed: **Double Wrap around curb guards**	$255.00	$255.00
	Moldboard Shoes, Pair Installed: **Yes**	$294.00	$294.00
	Hitches		
	Hitch, Plow Portion: **Quick hitch**	$923.00	$923.00
	Plow Portion Installed on Plow: **Yes**		
	Hitch, Truck Portion: **Quick hitch, low profile**	$1,252.00	$1,252.00
	Quick Hitch Width: **30.5" center-to-center width**		
	Hydraulic Lift Cylinders, Truck Portion: **3" x 2" x 10" Nitrided Lift Cylinder , standard**		
	Connect Under Pressure 100, Truck Portion: **CUP-100, 4 - 6 ports**	$853.00	$853.00
	Bumper to Frame Mounting Kit: **Yes**	$397.00	$397.00
	End Customer: MDOT		

Quote Total:	$15,723.00
0% Discount:	$0.00
0% Sales Tax:	$0.00
Total Dealer Cost:	$15,723.00

HENDERSON

PRODUCTS, INC.

1085 SOUTH THIRD STREET
PO BOX 40, MANCHESTER, IA 52057-0040
PHONE: 563-927-2828

SALES QUOTATION

DATE	PAGE
12/12/2016	1

CUSTOMER: Knapheide Truck Equipment Co.
CONTACT: Jim Fountain
ADDRESS: 1200 South Averill Avenue
Flint, Michigan USA 48503

PHONE: 810-762-0755
FAX: 855-629-4643
EMAIL: jfountain@knapheide.com

QUOTE ID: 93046-5
QUOTE DATE: 12/12/2016
VALID UNTIL: 1/11/2017

SALESPERSON: James Fountain
PHONE: 810-762-1100
FAX: 855-629-4643
EMAIL: jfountain@knapheide.com

QUANTITY	DESCRIPTION	LIST PRICE EACH	EXT. LIST PRICE
	QUOTE 93046-5: MDOT		
1	CONFIGURATION 1-1: RTS - Replacement tailgate spreader		
		$6,328.00	$6,328.00
	0% Discount:	$0.00	$0.00
	Dealer Cost:	$6,328.00	$6,328.00
	DESCRIPTION: RTS 304SS Adjustable baffle Spinner kit		
	MATERIAL		
	SPREADER & AUGER MATERIAL: **304SS**	$4,626.00	$4,626.00
	OPTIONAL EQUIPMENT		
	ADJUSTABLE BAFFLE: **Adjustable baffle**	$71.00	$71.00
	SPINNER SUPPORT KIT: **Spinner kit**	$75.00	$75.00
	HYDRAULIC RESERVOIR KIT: **20 gallon kit**	$366.00	$366.00
	HYDRAULIC HOSE & COUPLER KIT: **Hose & coupler kit**	$431.00	$431.00
	REAR HOSE & COUPLER KIT: **Rear hose & coupler kit**	$384.00	$384.00
	HYDRAULIC CONTROL VALVE: **2FFL12 dual flow valve. load sensing**	$375.00	$375.00
	End Customer: MDOT		

Quote Total:	$6,328.00
0% Discount:	$0.00
0% Sales Tax:	$0.00
Total Dealer Cost:	$6,328.00

HENDERSON

PRODUCTS, INC.

1085 SOUTH THIRD STREET
PO BOX 40, MANCHESTER, IA 52057-0040
PHONE: 563-927-2828

SALES QUOTATION

DATE	PAGE
12/12/2016	1

CUSTOMER: Knapheide Truck Equipment Co.
CONTACT: Jim Fountain
ADDRESS: 1200 South Averill Avenue
Flint, Michigan USA 48503

PHONE: 810-762-0755
FAX: 855-629-4643
EMAIL: jfountain@knapheide.com

QUOTE ID: 93047-5
QUOTE DATE: 12/12/2016
VALID UNTIL: 1/11/2017

SALESPERSON: James Fountain
PHONE: 810-762-1100
FAX: 855-629-4643
EMAIL: jfountain@knapheide.com

QUANTITY	DESCRIPTION	LIST PRICE EACH	EXT. LIST PRICE
	QUOTE 93047-5: MDOT		
1	CONFIGURATION 1-1: TGS salt / sand spreader		
		$4,316.00	$4,316.00
	0% Discount:	$0.00	$0.00
	Dealer Cost:	$4,316.00	$4,316.00
	DESCRIPTION: TGS 201SS 6" dia. auger, direct drive Std brackets for 96" wide bodies		
	MATERIAL		
	TROUGH MATERIAL: **201SS**		
	AUGER		
	AUGER SIZE AND TYPE: **6" dia. auger, direct drive**	$3,528.00	$3,528.00
	OPTIONAL EQUIPMENT		
	MOUNTING BRACKETS: **Std brackets for 96" wide bodies**		
	SPINNER SUPPORT KIT: **Spinner assembly support kit**	$75.00	$75.00
	ADJUSTABLE BAFFLE: **Adjustable baffle to direct spread**	$71.00	$71.00
	CENTER DISCHARGE: **None or N/A**		
	RIGHT HAND BERM CHUTE: **None or N/A**		
	ASPHALT DUMP: **None**		
	MOTOR W/ SPEED SENSOR: **Motor w/integral speed sensor**	$258.00	$258.00
	PAINT: **None**		
	SPREADER CONTROLS		
	CONTROL: **None**		
	CARTRIDGES: **None**		
	FLOW VALVE: **None**		
	FITTINGS: **None**		
	HYDRAULICS		
	RESERVOIR: **None**		
	HOSES, PIPELINES & FITTINGS: **None**		
	REAR HOSE KIT: **Rear hose kit**	$384.00	$384.00
	End Customer: MDOT		

Quote Total:	$4,316.00
0% Discount:	$0.00
0% Sales Tax:	$0.00
Total Dealer Cost:	$4,316.00

HENDERSON

PRODUCTS, INC.

1085 SOUTH THIRD STREET
PO BOX 40, MANCHESTER, IA 52057-0040
PHONE: 563-927-2828

SALES QUOTATION

DATE	PAGE
12/12/2016	1

CUSTOMER: Knapheide Truck Equipment Co.
CONTACT: Jim Fountain
ADDRESS: 1200 South Averill Avenue
Flint, Michigan USA 48503

PHONE: 810-762-0755
FAX: 855-629-4643
EMAIL: jfountain@knapheide.com

QUOTE ID: 93035-4
QUOTE DATE: 12/12/2016
VALID UNTIL: 1/11/2017

SALESPERSON: James Fountain
PHONE: 810-762-1100
FAX: 855-629-4643
EMAIL: jfountain@knapheide.com

QUANTITY	DESCRIPTION	LIST PRICE EACH	EXT. LIST PRICE
	QUOTE 93035-4: MDOT		
1	CONFIGURATION 1-1: Underbody scraper		
		$10,667.00	$10,667.00
	0% Discount:	$0.00	$0.00
	Dealer Cost:	$10,667.00	$10,667.00
	DESCRIPTION: UBS Power reverse moldboard, standard 10' length / 20" height 1" thick moldboard Standard 1/2"		
	Scraper Size / Options		
	Moldboard Angling: **Power reverse moldboard, standard**		
	Scraper Length / Height: **10' length / 20" height 1" thick moldboard**	$9,429.00	$9,429.00
	Cushion Valve for Reversing Cylinders: **Yes**	$175.00	$175.00
	Relief Valve for Scraper Down Pressure: **Yes**		
	Curb Guard, Installed: **Two wrap around curb guards**	$236.00	$236.00
	Cutting Edge: **3/4" x 6" carbide cutting edge**	$827.00	$827.00
	End Customer: MDOT		

Quote Total:	$10,667.00
0% Discount:	$0.00
0% Sales Tax:	$0.00
Total Dealer Cost:	$10,667.00

HENDERSON

PRODUCTS, INC.

1085 SOUTH THIRD STREET
PO BOX 40, MANCHESTER, IA 52057-0040
PHONE: 563-927-2828

SALES QUOTATION

DATE	PAGE
12/12/2016	1

CUSTOMER: Knapheide Truck Equipment Co.
CONTACT: Jim Fountain
ADDRESS: 1200 South Averill Avenue
Flint, Michigan USA 48503

PHONE: 810-762-0755
FAX: 855-629-4643
EMAIL: jfountain@knapheide.com

QUOTE ID: 93036-5
QUOTE DATE: 12/12/2016
VALID UNTIL: 1/11/2017

SALESPERSON: James Fountain
PHONE: 810-762-1100
FAX: 855-629-4643
EMAIL: jfountain@knapheide.com

QUANTITY	DESCRIPTION	LIST PRICE EACH	EXT. LIST PRICE
	QUOTE 93036-5: MDOT		
1	CONFIGURATION 1-1: Underbody scraper		
		$11,376.00	$11,376.00
	0% Discount:	$0.00	$0.00
	Dealer Cost:	$11,376.00	$11,376.00
	DESCRIPTION: UBS Power reverse moldboard, standard 12' length / 20" height 1" thick moldboard Standard 1/2"		
	Scraper Size / Options		
	Moldboard Angling: **Power reverse moldboard, standard**		
	Scraper Length / Height: **12' length / 20" height 1" thick moldboard**	$9,972.00	$9,972.00
	Cushion Valve for Reversing Cylinders: **Yes**	$175.00	$175.00
	Relief Valve for Scraper Down Pressure: **Yes**		
	Curb Guard, Installed: **Two wrap around curb guards**	$236.00	$236.00
	Cutting Edge: **3/4" x 6" carbide cutting edge**	$993.00	$993.00
	End Customer: MDOT		

Quote Total:	$11,376.00
0% Discount:	$0.00
0% Sales Tax:	$0.00
Total Dealer Cost:	$11,376.00

HENDERSON

PRODUCTS, INC.

1085 SOUTH THIRD STREET
PO BOX 40, MANCHESTER, IA 52057-0040
PHONE: 563-927-2828

SALES QUOTATION

DATE	PAGE
12/12/2016	1

CUSTOMER: Knapheide Truck Equipment Co.
CONTACT: Jim Fountain
ADDRESS: 1200 South Averill Avenue
Flint, Michigan USA 48503

PHONE: 810-762-0755
FAX: 855-629-4643
EMAIL: jfountain@knapheide.com

QUOTE ID: 93037-4
QUOTE DATE: 12/12/2016
VALID UNTIL: 1/11/2017

SALESPERSON: James Fountain
PHONE: 810-762-1100
FAX: 855-629-4643
EMAIL: jfountain@knapheide.com

QUANTITY	DESCRIPTION	LIST PRICE EACH	EXT. LIST PRICE
	QUOTE 93037-4: MDOT		
1	CONFIGURATION 1-1: Henderson Wing System		
		$14,330.00	$14,330.00
	0% Discount:	$0.00	$0.00
	Dealer Cost:	$14,330.00	$14,330.00
	DESCRIPTION: HWS HEAVY DUTY REAR OF CAB SYSTEM REAR BRACE BEHIND REAR AXLES		
	WING CONFIGURATION TYPE		
	WING CONFIGURATION TYPE: **HEAVY DUTY**		
	WING SYSTEM		
	WING SYSTEM: **REAR OF CAB SYSTEM**		
	REAR BRACE LOCATION		
	REAR BRACE LOCATION: **REAR BRACE BEHIND REAR AXLES**		
	WING SIDE LOCATION		
	WING SIDE LOCATION: **RIGHT HAND SIDE**		
	TRIP TYPE		
	TRIP TYPE: **ADJUSTABLE TRIP EDGE MOLDBOARD**	$1,380.00	$1,380.00
	WING BRACES		
	WING BRACES: **HYD EXT BRACE W/NITRO ACCUM**	$3,419.00	$3,419.00
	CUTTING EDGE LENGTH		
	CUTTING EDGE LENGTH: **8' CUTTING EDGE**	$6,054.00	$6,054.00
	CUTTING EDGE MATERIAL		
	CUTTING EDGE MATERIAL: **5/8 X 8 TOP PUNCH CUTTING EDGE**	$175.00	$175.00
	MOLDBOARD MATERIAL		
	MOLDBOARD MATERIAL: **10GA 201SS CURVED MOLDBOARD**	$662.00	$662.00
	MOLDBOARD HEIGHT AND SHAPE		
	MOLDBOARD HEIGHT AND SHAPE: **32" INLET/37" DISCHRG TAPERED**	$873.00	$873.00
	MOLDBOARD DISCHARGE		
	MOLDBOARD DISCHARGE: **6" FLARE ON DISCHARGE W/BEAD**		
	MOLDBOARD BOTTOM ANGLE		
	MOLDBOARD BOTTOM ANGLE: **4 X 4 X .75 BOTTOM ANGLE**		
	MOLDBOARD TOP FLANGE		
	MOLDBOARD TOP FLANGE: **MOLDBOARD BOXED-IN TOP FLANGE**		
	MOLDBOARD ADD ONS		
	MOLDBOARD ADD ONS: **MOLDBOARD CENTER LIFT EYE**		

HENDERSON

PRODUCTS, INC.

1085 SOUTH THIRD STREET
PO BOX 40, MANCHESTER, IA 52057-0040
PHONE: 563-927-2828

SALES QUOTATION

DATE	PAGE
12/12/2016	2

CUSTOMER: Knapheide Truck Equipment Co.
CONTACT: Jim Fountain
ADDRESS: 1200 South Averill Avenue
Flint, Michigan USA 48503

PHONE: 810-762-0755
FAX: 855-629-4643
EMAIL: jfountain@knapheide.com

QUOTE ID: 93037-4
QUOTE DATE: 12/12/2016
VALID UNTIL: 1/11/2017

SALESPERSON: James Fountain
PHONE: 810-762-1100
FAX: 855-629-4643
EMAIL: jfountain@knapheide.com

QUANTITY	DESCRIPTION	LIST PRICE EACH	EXT. LIST PRICE
	FRONT MAST TYPE		
	FRONT MAST TYPE: **12" LIFT/15" CYL HYD FRNT MAST**	($121.00)	($121.00)
	FRONT MAST MOUNT		
	FRONT MAST MOUNT: **FRONT CROSSTUBE & CHEEKPLATES**	$752.00	$752.00
	REAR SUPPORT AND MAST		
	REAR SUPPORT AND MAST: **CHEEKPLATES W/REAR CROSS TUBE**		
	MOLDBOARD HEEL LIFT		
	MOLDBOARD HEEL LIFT: **FRNT MB HEEL LIFT, 4" CYL CUSH**	$558.00	$558.00
	PAINT		
	PAINT: **MB STD ORANGE,ALL ELSE BLACK**		
	ADD ONS		
	MOLDBOARD SHOE DISCHARGE END: **NONE**		
	CURB GUARD, INSTALLED: **CURB GUARD, INSTALLED**	$125.00	$125.00
	ORANGE SIGHT MARKER,SHIP LOOSE: **ORANGE SIGHT MARKER,SHIP LOOSE**	$22.00	$22.00
	HEEL LIFT HOLDING VALVE: **HEEL LIFT HOLDING VALVE**	$279.00	$279.00
	HEEL LIFT FLOW CONTROLS: **HEEL LIFT FLOW CONTROLS**	$152.00	$152.00
	SNGL FUNCTION HYD LIFT: **NONE**		
	End Customer: MDOT		

Quote Total:	$14,330.00
0% Discount:	$0.00
0% Sales Tax:	$0.00
Total Dealer Cost:	$14,330.00

Confidential Price List

1200 E. Birch Street - Brandon, South Dakota 57005-2001
www.luvernetruck.com

Effective 12-2-2016

Subject to Change Without Notice

Brandon, South Dakota
800-533-0506
Fax 605-582-3486
luvernetruck.com

NO ALTERATIONS PERMITTED

Alterations of incorrect installation procedures void all warranties and towing capacity ratings.

Returns subject to up to 20% handling charge. Return for credit toward future purchases only, requires written authorization.

Non-Returnable While Supplies Last are Labeled "WSL"

Additions in Past 3 Months are Highlighted in Green

FDX Reflects Luverne Account Shipping Standards

BED RAILS	18-
CAB GUARD	19
DISPLAYS	34
ECO-BOOST / GM BUMPER INSERTS	45
FRONT-END PROTECTION	43
Bull Bars	
1¼" and 2" Grille Guards	38-
"Defender Series" Front-End Replacements	39
Prowler Max Grille Guards	35-
NEW Baja Guard	37
Tuff Guards / Tuff Guard II	34
ProTec Grille Guards	37-
LUVERNE TONNEAU COVER	38
MIRRORS - GM TOWING MIRRORS	38
NERF BARS	42-
3" Stainless Steel Polished and Painted	43
3" W2W Stainless Steel Polished and Painted	42-
4" Oval Polished Stainless Steel	43
6" Oval Polished Stainless Steel and Painted	44
SPLASH GUARDS	44
Textured Rubber Mud Guards	
Textured Rubber Tow Guard	14-
Contoured Stainless Steel	15
Traditional Stainless Steel	16
STEPS	17
Regal 7 Oval Steps / Regal 7 Oval Steps (Wheel-to-Wheel)	17-
Baja Steps	18
Side Entry Steps	
EZ Step	39-
MegaSteps / MegaSteps (Wheel-to-Wheel)	40
O-MegaSteps / O-MegaSteps (Wheel-to-Wheel)	40
NEW O-Mega II 6" Oval Steps (Cab & Wheel-to-Wheel)	40-
Receiver Hitch Stingers and Steps	41
Grip Steps / Grip Steps (Wheel-to-Wheel)	41
Van Steps (Includes GM/Ford/Ram/Sprinter/Nissan)	
STOR-AWAY	2-8
TERMS AND CONDITIONS OF SALES	8-9
WARRANTY PROCEDURE	10-
	13
	18

Finish	Year	Description		FDX	Weight	Item #	Retail
		REGAL 7 OVAL STEP - CAB LENGTH - Rocker Mount Installation (GAS)					
		CHEVROLET/GMC					
	14-17	Silverado/Sierra 1500 Regular Cab - Brackets Only		Y	15 lbs.	401441	114.00
Polished	14-17	Silverado/Sierra 1500 Regular Cab - Boards Only		Y	26 lbs.	477054	343.00
	07-13	Silverado/Sierra 1500 Regular Cab - Brackets Only		Y	15 lbs.	400711	114.00
Polished	07-13	Silverado/Sierra 1500 Regular Cab - Boards Only		Y	26 lbs.	477054	343.00
	15-17	Silverado/Sierra 2500HD/3500 Regular Cab - Brackets Only		Y	15 lbs.	401441	114.00
Polished	15-17	Silverado/Sierra 2500HD/3500 Regular Cab - Boards Only		Y	26 lbs.	477054	343.00
	07-14	Silverado/Sierra 2500HD/3500 Regular Cab - Brackets Only		Y	15 lbs.	400711	114.00
Polished	07-14	Silverado/Sierra 2500HD/3500 Regular Cab - Boards Only		Y	26 lbs.	477054	343.00
	14-17	Silverado/Sierra 1500 Double Cab - Brackets Only		Y	21 lbs.	401443	157.00
Polished	14-17	Silverado/Sierra 1500 Double Cab - Boards Only		Y	38 lbs.	477078	443.00
	07-13	Silverado/Sierra 1500 Extended Cab - Brackets Only		Y	21 lbs.	400713	157.00
Polished	07-13	Silverado/Sierra 1500 Extended Cab - Boards Only		Y	38 lbs.	477078	443.00
	15-17	Silverado/Sierra 2500HD/3500 Double Cab - Brackets Only		Y	21 lbs.	401443	157.00
Polished	15-17	Silverado/Sierra 2500HD/3500 Double Cab - Boards Only		Y	38 lbs.	477078	443.00
	07-14	Silverado/Sierra 2500HD/3500 Extended Cab - Brackets Only		Y	21 lbs.	400713	157.00
Polished	07-14	Silverado/Sierra 2500HD/3500 Extended Cab - Boards Only		Y	38 lbs.	477078	443.00
	14-17	Silverado/Sierra 1500 Crew Cab - Brackets Only		Y	21 lbs.	401443	157.00
Polished	14-17	Silverado/Sierra 1500 Crew Cab - Boards Only		Y	42 lbs.	477088	471.00
	07-13	Silverado/Sierra 1500 Crew Cab - Brackets Only		Y	21 lbs.	400713	157.00
Polished	07-13	Silverado/Sierra 1500 Crew Cab - Boards Only		Y	42 lbs.	477088	471.00
	15-17	Silverado/Sierra 2500HD/3500 Crew Cab - Brackets Only		Y	21 lbs.	401443	157.00
Polished	15-17	Silverado/Sierra 2500HD/3500 Crew Cab - Boards Only		Y	42 lbs.	477088	471.00
	07-14	Silverado/Sierra 2500HD/3500 Crew Cab - Brackets Only		Y	21 lbs.	400713	157.00
Polished	07-14	Silverado/Sierra 2500HD/3500 Crew Cab - Boards Only		Y	42 lbs.	477088	471.00
	14-17	Silverado/Sierra 1500 Double Cab - Brackets Only		Y	21 lbs.	401443	157.00
Black	14-17	Silverado/Sierra 1500 Double Cab - Boards Only		Y	38 lbs.	277078	443.00
	07-13	Silverado/Sierra 1500 Extended Cab - Brackets Only		Y	21 lbs.	400713	157.00
Black	07-13	Silverado/Sierra 1500 Extended Cab - Boards Only		Y	38 lbs.	277078	443.00
	15-17	Silverado/Sierra 2500HD/3500 Double Cab - Brackets Only		Y	21 lbs.	401443	157.00
Black	15-17	Silverado/Sierra 2500HD/3500 Double Cab - Boards Only		Y	38 lbs.	277078	443.00
	07-14	Silverado/Sierra 2500HD/3500 Extended Cab - Brackets Only		Y	21 lbs.	400713	157.00
Black	07-14	Silverado/Sierra 2500HD/3500 Extended Cab - Boards Only		Y	38 lbs.	277078	443.00
	14-17	Silverado/Sierra 1500 Crew Cab - Brackets Only		Y	21 lbs.	401443	157.00
Black	14-17	Silverado/Sierra 1500 Crew Cab - Boards Only		Y	42 lbs.	277088	471.00
	07-13	Silverado/Sierra 1500 Crew Cab - Brackets Only		Y	21 lbs.	400713	157.00
Black	07-13	Silverado/Sierra 1500 Crew Cab - Boards Only		Y	42 lbs.	277088	471.00
	15-17	Silverado/Sierra 2500HD/3500 Crew Cab - Brackets Only		Y	21 lbs.	401443	157.00
Black	15-17	Silverado/Sierra 2500HD/3500 Crew Cab - Boards Only		Y	42 lbs.	277088	471.00
	07-14	Silverado/Sierra 2500HD/3500 Crew Cab - Brackets Only		Y	21 lbs.	400713	157.00
Black	07-14	Silverado/Sierra 2500HD/3500 Crew Cab - Boards Only		Y	42 lbs.	277088	471.00
		REGAL 7 OVAL STEP - CAB LENGTH - Body Mount Installation (GAS OR DIESEL)					
		CHEVROLET/GMC					
	99-13	Silverado/Sierra 1500 Regular Cab - Brackets Only		Y	17 lbs.	401111	129.00
Polished	99-13	Silverado/Sierra 1500 Regular Cab - Boards Only		Y	26 lbs.	477054	343.00
	15-17	Silverado/Sierra 2500HD/3500 Regular Cab - Brackets Only		Y	17 lbs.	401541	129.00
Polished	15-17	Silverado/Sierra 2500HD/3500 Regular Cab - Boards Only		Y	26 lbs.	477054	343.00
	01-14	Silverado/Sierra 2500HD/3500 Regular Cab - Brackets Only		Y	17 lbs.	401111	129.00
Polished	01-14	Silverado/Sierra 2500HD/3500 Regular Cab - Boards Only		Y	26 lbs.	477054	343.00
	99-13	Silverado/Sierra 1500 Extended Cab - Brackets Only		Y	28 lbs.	401113	193.00
Polished	99-13	Silverado/Sierra 1500 Extended Cab - Boards Only		Y	38 lbs.	477078	443.00
	15-17	Silverado/Sierra 2500HD/3500 Double Cab - Brackets Only		Y	28 lbs.	401543	193.00
Polished	15-17	Silverado/Sierra 2500HD/3500 Double Cab - Boards Only		Y	38 lbs.	477078	443.00
	01-14	Silverado/Sierra 2500HD/3500 Extended Cab - Brackets Only		Y	28 lbs.	401113	193.00
Polished	01-14	Silverado/Sierra 2500HD/3500 Extended Cab - Boards Only		Y	38 lbs.	477078	443.00
	99-13	Silverado/Sierra 1500 Crew Cab - Brackets Only		Y	28 lbs.	401113	193.00
Polished	99-13	Silverado/Sierra 1500 Crew Cab - Boards Only		Y	42 lbs.	477088	471.00
	15-17	Silverado/Sierra 2500HD/3500 Crew Cab - Brackets Only		Y	28 lbs.	401543	193.00
Polished	15-17	Silverado/Sierra 2500HD/3500 Crew Cab - Boards Only		Y	42 lbs.	477088	471.00
	01-14	Silverado/Sierra 2500HD/3500 Crew Cab - Brackets Only		Y	28 lbs.	401113	193.00
Polished	01-14	Silverado/Sierra 2500HD/3500 Crew Cab - Boards Only		Y	42 lbs.	477088	471.00

Finish	Year	Description		FDX	Weight	Item #	Retail
		REGAL 7 OVAL STEP - CAB LENGTH - Body Mount Installation (GAS OR DIESEL)					
		CHEVROLET/GMC					
	99-13	Silverado/Sierra 1500 Extended Cab - Brackets Only		Y	28 lbs.	401113	193.00
Black	99-13	Silverado/Sierra 1500 Extended Cab - Boards Only		Y	38 lbs.	277078	443.00
	15-17	Silverado/Sierra 2500HD/3500 Double Cab - Brackets Only		Y	28 lbs.	401543	193.00
Black	15-17	Silverado/Sierra 2500HD/3500 Double Cab - Boards Only		Y	38 lbs.	277078	443.00
	01-14	Silverado/Sierra 2500HD/3500 Extended Cab - Brackets Only		Y	28 lbs.	401113	193.00
Black	01-14	Silverado/Sierra 2500HD/3500 Extended Cab - Boards Only		Y	38 lbs.	277078	443.00
	99-13	Silverado/Sierra 1500 Crew Cab - Brackets Only		Y	28 lbs.	401113	193.00
Black	99-13	Silverado/Sierra 1500 Crew Cab - Boards Only		Y	42 lbs.	277088	471.00
	15-17	Silverado/Sierra 2500HD/3500 Crew Cab - Brackets Only		Y	28 lbs.	401543	193.00
Black	15-17	Silverado/Sierra 2500HD/3500 Crew Cab - Boards Only		Y	42 lbs.	277088	471.00
	01-14	Silverado/Sierra 2500HD/3500 Crew Cab - Brackets Only		Y	28 lbs.	401113	193.00
Black	01-14	Silverado/Sierra 2500HD/3500 Crew Cab - Boards Only		Y	42 lbs.	277088	471.00
		REGAL 7 OVAL STEP - CAB LENGTH					
		CHEVROLET/GMC					
	07-13	Avalanche - Brackets Only		Y	21 lbs.	400713	157.00
Polished	07-13	Avalanche - Boards Only		Y	42 lbs.	477088	471.00
	07-17	Suburban/Yukon XL - Brackets Only		Y	21 lbs.	400713	157.00
Polished	07-17	Suburban/Yukon XL - Boards Only		Y	42 lbs.	477088	471.00
	07-17	Tahoe/Yukon - Brackets Only		Y	21 lbs.	400713	157.00
Polished	07-17	Tahoe/Yukon - Boards Only		Y	38 lbs.	477078	443.00
	07-13	Avalanche - Brackets Only		Y	21 lbs.	400713	157.00
Black	07-13	Avalanche - Boards Only		Y	42 lbs.	277088	471.00
	07-16	Suburban/Yukon XL - Brackets Only		Y	21 lbs.	400713	157.00
Black	07-17	Suburban/Yukon XL - Boards Only		Y	42 lbs.	277088	471.00
	07-16	Tahoe/Yukon - Brackets Only		Y	21 lbs.	400713	157.00
Black	07-17	Tahoe/Yukon - Boards Only		Y	38 lbs.	277078	443.00
		REGAL 7 OVAL STEP - CAB LENGTH - Rocker Mount Installation (GAS OR DIESEL)					
		RAM					
	09-17	Ram Regular Cab 1500 - Brackets Only		Y	15 lbs.	401631	206.00
Polished	09-17	Ram Regular Cab 1500 - Boards Only		Y	28 lbs.	477060	357.00
	09-14	**WSL** Ram Regular Cab 1500 - Brackets Only		Y	13 lbs.	400931	137.00
Polished	09-14	Ram Regular Cab 1500 - Boards Only		Y	28 lbs.	477060	357.00
	10-17	Ram Regular Cab 2500, 3500 - Brackets Only		Y	15 lbs.	401631	206.00
Polished	10-17	Ram Regular Cab 2500, 3500 - Boards Only		Y	28 lbs.	477060	357.00
	11-17	Ram Regular Cab 3500/4500/5500 Chassis Cab - Brackets Only		Y	15 lbs.	401631	206.00
Polished	11-17	Ram Regular Cab 3500/4500/5500 Chassis Cab - Boards Only		Y	28 lbs.	477060	357.00
	10-15	**WSL** Ram Regular Cab 2500/3500/4500/5500 (4500/5500 Req. Kit #551415 N/C) - Brackets Only		Y	13 lbs.	400931	137.00
Polished	10-15	Ram Regular Cab 2500/3500/4500/5500 - Boards Only		Y	28 lbs.	477060	357.00
	11-12	**WSL** Ram Regular Cab 3500/4500/5500 Chassis Cab (Req. Kit #551415 N/C) - Brackets Only		Y	13 lbs.	400931	137.00
Polished	11-12	Ram Regular Cab 3500/4500/5500 Chassis Cab - Boards Only		Y	28 lbs.	477060	357.00
	09-17	Ram Quad Cab 1500 - Brackets Only		Y	21 lbs.	401632	227.00
Polished	09-17	Ram Quad Cab 1500 - Boards Only		Y	38 lbs.	477078	443.00
	09-17	Ram Crew Cab 1500 - Brackets Only		Y	21 lbs.	401632	227.00
Polished	09-17	Ram Crew Cab 1500 - Boards Only		Y	42 lbs.	477088	471.00
	10-17	Ram Crew Cab 2500, 3500 - Brackets Only		Y	21 lbs.	401632	227.00
Polished	10-17	Ram Crew Cab 2500, 3500 - Boards Only		Y	42 lbs.	477088	471.00
	11-17	Ram Crew Cab 3500/4500/5500 Chassis Cab - Brackets Only		Y	21 lbs.	401632	227.00
Polished	11-17	Ram Crew Cab 3500/4500/5500 Chassis Cab - Boards Only		Y	42 lbs.	477088	471.00
	11-15	**WSL** Ram Crew Cab 3500/4500/5500 Chassis Cab - Brackets Only		Y	16 lbs.	401335	170.00
Polished	11-15	Ram Crew Cab 3500/4500/5500 Chassis Cab - Boards Only		Y	42 lbs.	477088	471.00
	10-17	Ram Mega Cab 2500, 3500 - Brackets Only		Y	21 lbs.	401632	227.00
Polished	10-17	Ram Mega Cab 2500, 3500 - Boards Only		Y	46 lbs.	477098	529.00
	09-17	Ram Quad Cab 1500 - Brackets Only		Y	21 lbs.	401632	227.00
Black	09-17	Ram Quad Cab 1500 - Boards Only		Y	38 lbs.	277078	443.00
	09-17	Ram Crew Cab 1500 - Brackets Only		Y	21 lbs.	401632	227.00
Black	09-17	Ram Crew Cab 1500 - Boards Only		Y	42 lbs.	277088	471.00
	10-17	Ram Crew Cab 2500, 3500 - Brackets Only		Y	21 lbs.	401632	227.00
Black	10-17	Ram Crew Cab 2500, 3500 - Boards Only		Y	42 lbs.	277088	471.00
	11-17	Ram Crew Cab 3500/4500/5500 Chassis Cab - Brackets Only		Y	21 lbs.	401632	227.00
Black	11-17	Ram Crew Cab 3500/4500/5500 Chassis Cab - Boards Only		Y	42 lbs.	277088	471.00
	11-15	**WSL** Ram Crew Cab 3500/4500/5500 Chassis Cab - Brackets Only		Y	16 lbs.	401335	170.00
Black	11-15	Ram Crew Cab 3500/4500/5500 Chassis Cab - Boards Only		Y	42 lbs.	277088	471.00

Finish	Year	Description	FDX	Weight	Item #	Retail
		REGAL 7 OVAL STEP - CAB LENGTH - Body Mount Installation (GAS OR DIESEL)				
		RAM				
	09-17	Ram Regular Cab 1500 - Brackets Only	Y	35 lbs.	401031	166.00
Polished	09-17	Ram Regular Cab 1500 - Boards Only	Y	28 lbs.	477060	357.00
	10-17	Ram Regular Cab 2500/3500/4500/5500 - Brackets Only (Chassis Cab Requires Acc Kit #552714 N/C)	Y	35 lbs.	401031	166.00
Polished	10-17	Ram Regular Cab 2500/3500/4500/5500 - Boards Only	Y	28 lbs.	477060	357.00
	09-17	Ram Quad Cab 1500 - Brackets Only	Y	40 lbs.	401032	221.00
Polished	09-17	Ram Quad Cab 1500 - Boards Only	Y	38 lbs.	477078	443.00
	09-17	Ram Crew Cab 1500 - Brackets Only	Y	40 lbs.	401032	221.00
Polished	09-17	Ram Crew Cab 1500 - Boards Only	Y	42 lbs.	477088	471.00
	10-17	Ram Crew Cab 2500, 3500 - Brackets Only (Chassis Cab Requires Accessory Kit #401300 N/C)	Y	40 lbs.	401032	221.00
Polished	10-17	Ram Crew Cab 2500, 3500 - Boards Only	Y	42 lbs.	477088	471.00
	09-17	Ram Quad Cab 1500 - Brackets Only	Y	40 lbs.	401032	221.00
Black	09-17	Ram Quad Cab 1500 - Boards Only	Y	38 lbs.	277078	443.00
	09-17	Ram Crew Cab 1500 - Brackets Only	Y	40 lbs.	401032	221.00
Black	09-17	Ram Crew Cab 1500 - Boards Only	Y	42 lbs.	277088	471.00
	10-17	Ram Crew Cab 2500, 3500 - Brackets Only (Chassis Cab Requires Accessory Kit #401300 N/C)	Y	40 lbs.	401032	221.00
Black	10-17	Ram Crew Cab 2500, 3500 - Boards Only	Y	42 lbs.	277088	471.00
		REGAL 7 OVAL STEP - CAB LENGTH				
		FORD				
	15-17	F-150 Regular Cab - Brackets Only	Y	20 lbs.	401521	87.00
Polished	15-17	F-150 Regular Cab - Boards Only	Y	28 lbs.	477060	357.00
	04-14	F-150 Regular Cab - Brackets Only	Y	10 lbs.	400921	87.00
Polished	04-14	F-150 Regular Cab - Boards Only	Y	28 lbs.	477060	357.00
	15-17	F-150 Super Cab - Brackets Only	Y	35 lbs.	401523	143.00
Polished	15-17	F-150 Super Cab - Boards Only	Y	38 lbs.	477078	443.00
	04-14	F-150 Super Cab - Brackets Only	Y	18 lbs.	400922	143.00
Polished	04-14	F-150 Super Cab - Boards Only	Y	38 lbs.	477078	443.00
	15-17	F-150 Super Crew - Brackets Only	Y	35 lbs.	401523	143.00
Polished	15-17	F-150 Super Crew - Boards Only	Y	42 lbs.	477088	471.00
	04-14	F-150 Super Crew (Also fits 05-08 Lincoln Mark LT) - Brackets Only	Y	18 lbs.	400922	143.00
Polished	04-14	F-150 Super Crew (Also fits 05-08 Lincoln Mark LT) - Boards Only	Y	42 lbs.	477088	471.00
	2017	F-Series Super Duty Regular Cab - Brackets Only	Y	20 lbs.	401521	87.00
Polished	2017	F-Series Super Duty Regular Cab - Boards Only	Y	28 lbs.	477060	357.00
	99-16	F-Series Super Duty Regular Cab - Brackets Only	Y	14 lbs.	409921	114.00
Polished	99-16	F-Series Super Duty Regular Cab - Boards Only	Y	26 lbs.	477054	343.00
	2017	F-Series Super Duty Super Cab - Brackets Only	Y	35 lbs.	401523	143.00
Polished	2017	F-Series Super Duty Super Cab - Boards Only	Y	38 lbs.	477078	443.00
	99-16	F-Series Super Duty Super Cab - Brackets Only	Y	18 lbs.	409922	143.00
Polished	99-16	F-Series Super Duty Super Cab - Boards Only	Y	38 lbs.	477078	443.00
	2017	F-Series Super Duty Crew Cab - Brackets Only	Y	35 lbs.	401523	143.00
Polished	2017	F-Series Super Duty Crew Cab - Boards Only	Y	42 lbs.	477088	471.00
	99-16	F-Series Super Duty Crew Cab - Brackets Only	Y	18 lbs.	409922	143.00
Polished	99-16	F-Series Super Duty Crew Cab - Boards Only	Y	42 lbs.	477088	471.00
	15-17	F-150 Super Cab - Brackets Only	Y	35 lbs.	401523	143.00
Black	15-17	F-150 Super Cab - Boards Only	Y	38 lbs.	277078	443.00
	04-14	F-150 Super Cab - Brackets Only	Y	18 lbs.	400922	143.00
Black	04-14	F-150 Super Cab - Boards Only	Y	38 lbs.	277078	443.00
	15-17	F-150 Super Crew - Brackets Only	Y	35 lbs.	401523	143.00
Black	15-17	F-150 Super Crew - Boards Only	Y	42 lbs.	277088	471.00
	04-14	F-150 Super Crew (Also fits 05-08 Lincoln Mark LT) - Brackets Only	Y	18 lbs.	400922	143.00
Black	04-14	F-150 Super Crew (Also fits 05-08 Lincoln Mark LT) - Boards Only	Y	42 lbs.	277088	471.00
	2017	F-Series Super Duty Super Cab - Brackets Only	Y	35 lbs.	401523	143.00
Black	2017	F-Series Super Duty Super Cab - Boards Only	Y	38 lbs.	277078	443.00
	99-16	F-Series Super Duty Super Cab - Brackets Only	Y	18 lbs.	409922	143.00
Black	99-16	F-Series Super Duty Super Cab - Boards Only	Y	38 lbs.	277078	443.00
	2017	F-Series Super Duty Crew Cab - Brackets Only	Y	35 lbs.	401523	143.00
Black	2017	F-Series Super Duty Crew Cab - Boards Only	Y	42 lbs.	277088	471.00
	99-16	F-Series Super Duty Crew Cab - Brackets Only	Y	18 lbs.	409922	143.00
Black	99-16	F-Series Super Duty Crew Cab - Boards Only	Y	42 lbs.	277088	471.00

Finish	Year	Description		FDX	Weight	Item #	Retail
		REGAL 7 OVAL STEP - CAB LENGTH					
		TOYOTA					
	07-17	Tundra Regular Cab - Brackets Only		Y	10 lbs.	400751	93.00
Polished	07-17	Tundra Regular Cab - Boards Only		Y	28 lbs.	477060	357.00
	07-17	Tundra Double Cab - Brackets Only		Y	17 lbs.	400752	157.00
Polished	07-17	Tundra Double Cab - Boards Only		Y	38 lbs.	477078	443.00
	07-17	Tundra CrewMax - Brackets Only		Y	17 lbs.	400752	157.00
Polished	07-17	Tundra CrewMax - Boards Only		Y	42 lbs.	477088	471.00
	07-17	Tundra Double Cab - Brackets Only		Y	17 lbs.	400752	157.00
Black	07-17	Tundra Double Cab - Boards Only		Y	38 lbs.	277078	443.00
	07-17	Tundra CrewMax - Brackets Only		Y	17 lbs.	400752	157.00
Black	07-17	Tundra CrewMax - Boards Only		Y	42 lbs.	277088	471.00
		NISSAN					
	16-17	Nissan Titan XD Crew Cab - Brackets Only		Y	26 lbs.	401663	143.00
Polished	16-17	Nissan Titan XD Crew Cab Cab - Boards Only		Y	42 lbs.	477088	471.00
	16-17	Nissan Titan XD Crew Cab - Brackets Only		Y	26 lbs.	401663	143.00
Black	16-17	Nissan Titan XD Crew Cab Cab - Boards Only		Y	42 lbs.	277088	471.00
		REGAL 7 OVAL STEP - WHEEL-TO-WHEEL - Rocker Mount Installation (GAS)					
		CHEVROLET/GMC					
	14-17	Silverado/Sierra 1500 Regular Cab (8 ft. Box) - Brackets Only		Y	29 lbs.	401447	234.00
Polished	14-17	Silverado/Sierra 1500 Regular Cab (8 ft. Box) - Boards Only		Y	44 lbs.	477093	550.00
	07-13	Silverado/Sierra 1500 Regular Cab (8 ft. Box) - Brackets Only		Y	26 lbs.	400717	234.00
Polished	07-13	Silverado/Sierra 1500 Regular Cab (8 ft. Box) - Boards Only		Y	44 lbs.	477093	550.00
	15-17	Silverado/Sierra 2500HD/3500 Regular Cab (8 ft. Box) - Brackets Only		Y	29 lbs.	401447	234.00
Polished	15-17	Silverado/Sierra 2500HD/3500 Regular Cab (8 ft. Box) - Boards Only		Y	44 lbs.	477093	550.00
	07-14	Silverado/Sierra 2500HD/3500 Regular Cab (8 ft. Box) - Brackets Only		Y	26 lbs.	400717	234.00
Polished	07-14	Silverado/Sierra 2500HD/3500 Regular Cab (8 ft. Box) - Boards Only		Y	44 lbs.	477093	550.00
	14-17	Silverado/Sierra 1500 Double Cab (6.5 ft. Box) - Brackets Only		Y	29 lbs.	401447	234.00
Polished	14-17	Silverado/Sierra 1500 Double Cab (6.5 ft. Box) - Boards Only		N	46 lbs.	477101	600.00
	07-13	Silverado/Sierra 1500 Extended Cab (6.5 ft. Box) - Brackets Only		Y	26 lbs.	400717	234.00
Polished	07-13	Silverado/Sierra 1500 Extended Cab (6.5 ft. Box) - Boards Only		N	46 lbs.	477101	600.00
	07-13	Silverado/Sierra 1500 Extended Cab (8 ft. Box) - Brackets Only		Y	26 lbs.	400717	234.00
Polished	07-13	Silverado/Sierra 1500 Extended Cab (8 ft. Box) - Boards Only		N	52 lbs.	477113	657.00
	15-17	Silverado/Sierra 2500HD/3500 Double Cab (6.5 ft. Box) - Brackets Only		Y	29 lbs.	401447	234.00
Polished	15-17	Silverado/Sierra 2500HD/3500 Double Cab (6.5 ft. Box) - Boards Only		N	46 lbs.	477101	600.00
	07-14	Silverado/Sierra 2500HD/3500 Extended Cab (6.5 ft. Box) - Brackets Only		Y	26 lbs.	400717	234.00
Polished	07-14	Silverado/Sierra 2500HD/3500 Extended Cab (6.5 ft. Box) - Boards Only		N	46 lbs.	477101	600.00
	15-17	Silverado/Sierra 2500HD/3500 Double Cab (8 ft. Box) - Brackets Only		Y	29 lbs.	401447	234.00
Polished	15-17	Silverado/Sierra 2500HD/3500 Double Cab (8 ft. Box) - Boards Only		N	52 lbs.	477113	657.00
	07-14	Silverado/Sierra 2500HD/3500 Extended Cab (8 ft. Box) - Brackets Only		Y	26 lbs.	400717	234.00
Polished	07-14	Silverado/Sierra 2500HD/3500 Extended Cab (8 ft. Box) - Boards Only		N	52 lbs.	477113	657.00
	14-17	Silverado/Sierra 1500 Crew Cab (5.8 ft. Box) - Brackets Only		Y	29 lbs.	401447	234.00
Polished	14-17	Silverado/Sierra 1500 Crew Cab (5.8 ft. Box) - Boards Only		N	46 lbs.	477102	600.00
	07-13	Silverado/Sierra 1500 Crew Cab (5.8 ft. Box) - Brackets Only		Y	26 lbs.	400717	234.00
Polished	07-13	Silverado/Sierra 1500 Crew Cab (5.8 ft. Box) - Boards Only		N	46 lbs.	477102	600.00
	14-17	Silverado/Sierra 1500 Crew Cab (6.5 ft. Box) - Brackets Only		Y	29 lbs.	401447	234.00
Polished	14-17	Silverado/Sierra 1500 Crew Cab (6.5 ft. Box) (with Factory Flaps) - Boards Only		N	51 lbs.	477108	629.00
Polished	14-17	Silverado/Sierra 1500 Crew Cab (6.5 ft. Box) (w/o Factory Flaps) - Boards Only		N	52 lbs.	477114	643.00
	07-13	Silverado/Sierra 1500 Crew Cab (6.5 ft. Box) - Brackets Only		Y	26 lbs.	400717	234.00
Polished	07-13	Silverado/Sierra 1500 Crew Cab (6.5 ft. Box) - Boards Only		N	52 lbs.	477114	643.00
	15-17	Silverado/Sierra 2500HD/3500 Crew Cab (6.5 ft. Box) - Brackets Only		Y	29 lbs.	401447	234.00
Polished	15-17	Silverado/Sierra 2500HD/3500 Crew Cab (6.5 ft. Box) (with Factory Flaps) - Boards Only		N	51 lbs.	477108	629.00
Polished	15-17	Silverado/Sierra 2500HD/3500 Crew Cab (6.5 ft. Box) (w/o Factory Flaps) - Boards Only		N	52 lbs.	477114	643.00
	07-14	Silverado/Sierra 2500HD/3500 Crew Cab (6.5 ft. Box) - Brackets Only		Y	26 lbs.	400717	234.00
Polished	07-14	Silverado/Sierra 2500HD/3500 Crew Cab (6.5 ft. Box) - Boards Only		N	52 lbs.	477114	643.00
	15-17	Silverado/Sierra 2500HD/3500 Crew Cab (8 ft. Box) - Brackets Only		Y	29 lbs.	401447	234.00
Polished	15-17	Silverado/Sierra 2500HD/3500 Crew Cab (8 ft. Box) - Boards Only		N	60 lbs.	477125	707.00
	07-14	Silverado/Sierra 2500HD/3500 Crew Cab (8 ft. Box) - Brackets Only		Y	26 lbs.	400717	234.00
Polished	07-14	Silverado/Sierra 2500HD/3500 Crew Cab (8 ft. Box) - Boards Only		N	60 lbs.	477125	707.00

Finish	Year	Description	FDX	Weight	Item #	Retail
		REGAL 7 OVAL STEP - WHEEL-TO-WHEEL - Body Mount Installation (GAS OR DIESEL)				
		CHEVROLET/GMC				
	99-13	Silverado/Sierra 1500 Regular Cab (8 ft. Box) - Brackets Only	Y	35 lbs.	401117	250.00
Polished	99-13	Silverado/Sierra 1500 Regular Cab (8 ft. Box) - Boards Only	Y	44 lbs.	477093	550.00
	15-17	Silverado/Sierra 2500HD/3500 Regular Cab (8 ft. Box) - Brackets Only	Y	36 lbs.	401547	250.00
Polished	15-17	Silverado/Sierra 2500HD/3500 Regular Cab (8 ft. Box) - Boards Only	Y	44 lbs.	477093	550.00
	01-14	Silverado/Sierra 2500HD/3500 Regular Cab (8 ft. Box) - Brackets Only	Y	35 lbs.	401117	250.00
Polished	01-14	Silverado/Sierra 2500HD/3500 Regular Cab (8 ft. Box) - Boards Only	Y	44 lbs.	477093	550.00
	99-13	Silverado/Sierra 1500 Extended Cab (6.5 ft. Box) - Brackets Only	Y	35 lbs.	401117	250.00
Polished	99-13	Silverado/Sierra 1500 Extended Cab (6.5 ft. Box) - Boards Only	N	46 lbs.	477101	600.00
	99-13	Silverado/Sierra 1500 Extended Cab (8 ft. Box) - Brackets Only	Y	35 lbs.	401117	250.00
Polished	99-13	Silverado/Sierra 1500 Extended Cab (8 ft. Box) - Boards Only	N	52 lbs.	477113	657.00
	15-17	Silverado/Sierra 2500HD/3500 Double Cab (6.5 ft. Box) - Brackets Only	Y	36 lbs.	401547	250.00
Polished	15-17	Silverado/Sierra 2500HD/3500 Double Cab (6.5 ft. Box) - Boards Only	N	46 lbs.	477101	600.00
	01-14	Silverado/Sierra 2500HD/3500 Extended Cab (6.5 ft. Box) - Brackets Only	Y	35 lbs.	401117	250.00
Polished	01-14	Silverado/Sierra 2500HD/3500 Extended Cab (6.5 ft. Box) - Boards Only	N	46 lbs.	477101	600.00
	15-17	Silverado/Sierra 2500HD/3500 Double Cab (8 ft. Box) - Brackets Only	Y	36 lbs.	401547	250.00
Polished	15-17	Silverado/Sierra 2500HD/3500 Double Cab (8 ft. Box) - Boards Only	N	52 lbs.	477113	657.00
	01-14	Silverado/Sierra 2500HD/3500 Extended Cab (8 ft. Box) - Brackets Only	Y	35 lbs.	401117	250.00
Polished	01-14	Silverado/Sierra 2500HD/3500 Extended Cab (8 ft. Box) - Boards Only	N	52 lbs.	477113	657.00
	04-13	Silverado/Sierra 1500 Crew Cab (5.8 ft. Box) - Brackets Only	Y	35 lbs.	401117	250.00
Polished	04-13	Silverado/Sierra 1500 Crew Cab (5.8 ft. Box) - Boards Only	N	46 lbs.	477102	600.00
	15-17	Silverado/Sierra 2500HD/3500 Crew Cab (6.5 ft. Box) - Brackets Only	Y	36 lbs.	401547	250.00
Polished	15-17	Silverado/Sierra 2500HD/3500 Crew Cab (6.5 ft. Box) (with Factory Flaps) - Boards Only	N	51 lbs.	477108	629.00
Polished	15-17	Silverado/Sierra 2500HD/3500 Crew Cab (6.5 ft. Box) (w/o Factory Flaps) - Boards Only	N	52 lbs.	477114	643.00
	01-14	Silverado/Sierra 2500HD/3500 Crew Cab (6.5 ft. Box) - Brackets Only	Y	35 lbs.	401117	250.00
Polished	01-14	Silverado/Sierra 2500HD/3500 Crew Cab (6.5 ft. Box) - Boards Only	N	52 lbs.	477114	643.00
	15-17	Silverado/Sierra 2500HD/3500 Crew Cab (8 ft. Box) - Brackets Only	Y		401547	250.00
Polished	15-17	Silverado/Sierra 2500HD/3500 Crew Cab (8 ft. Box) - Boards Only	N	60 lbs.	477125	707.00
	01-14	Silverado/Sierra 2500HD/3500 Crew Cab (8 ft. Box) - Brackets Only	Y	35 lbs.	401117	250.00
Polished	01-14	Silverado/Sierra 2500HD/3500 Crew Cab (8 ft. Box) - Boards Only	N	60 lbs.	477125	707.00
		REGAL 7 OVAL STEP - WHEEL-TO-WHEEL - Rocker Mount Installation (GAS or DIESEL)				
		RAM				
	09-17	Ram Regular Cab 1500 (8 ft. Box) - Brackets Only	Y	31 lbs.	400938	284.00
Polished	09-17	Ram Regular Cab 1500 (8 ft. Box) - Boards Only	Y	44 lbs.	477093	550.00
	10-12	**WSL** Ram Regular Cab 2500, 3500 (8 ft. Box) (Also fits 2013 2500) (Excl. 2500 2wd) - Brackets Only	Y	26 lbs.	401037	236.00
Polished	10-12	Ram Regular Cab 2500, 3500 (8 ft. Box) - Boards Only	Y	43 lbs.	477093	550.00
	14-17	Ram Regular Cab 2500 (8 ft. Box) - Brackets Only	Y	26 lbs.	401438	244.00
Polished	14-17	Ram Regular Cab 2500 (8 ft. Box) - Boards Only	Y	43 lbs.	477093	550.00
	14-15	**WSL** Ram Regular Cab 2500 (8 ft. Box) - Brackets Only	Y	26 lbs.	401437	227.00
Polished	14-15	Ram Regular Cab 2500 (8 ft. Box) - Boards Only	Y	43 lbs.	477093	550.00
	13-17	Ram Regular Cab 3500 (8 ft. Box) - Brackets Only	Y	32 lbs.	401338	244.00
Polished	13-17	Ram Regular Cab 3500 (8 ft. Box) - Boards Only	Y	43 lbs.	477093	550.00
	13-15	**WSL** Ram Regular Cab 3500 (8 ft. Box) - Brackets Only	Y	26 lbs.	401337	227.00
Polished	13-15	Ram Regular Cab 3500 (8 ft. Box) - Boards Only	Y	43 lbs.	477093	550.00
	09-17	Ram Quad Cab 1500 (6.4 ft. Box) - Brackets Only	Y	31 lbs.	400938	284.00
Polished	09-17	Ram Quad Cab 1500 (6.4 ft. Box) - Boards Only	Y	46 lbs.	477097	586.00
	09-17	Ram Crew Cab 1500 (5.7 ft. Box) - Brackets Only	Y	31 lbs.	400938	284.00
Polished	09-17	Ram Crew Cab 1500 (5.7 ft. Box) - Boards Only	Y	47 lbs.	477096	593.00
	09-17	Ram Crew Cab 1500 (6.4 ft. Box) - Brackets Only	Y	31 lbs.	400938	284.00
Polished	09-17	Ram Crew Cab 1500 (6.4 ft. Box) - Boards Only	N	48 lbs.	477102	600.00
	10-12	**WSL** Ram Crew Cab 2500, 3500 (6.4 ft. Box) (Also fits 2013 2500) (Excl. 2500 2wd) - Brackets Only	Y	26 lbs.	401037	236.00
Polished	10-12	Ram Crew Cab 2500, 3500 (6.4 ft. Box) - Boards Only	N	48 lbs.	477102	600.00
	14-17	Ram Crew Cab 2500 (6.4 ft. Box) - Brackets Only	Y	26 lbs.	401438	244.00
Polished	14-17	Ram Crew Cab 2500 (6.4 ft. Box) - Boards Only	N	48 lbs.	477102	600.00
	14-15	**WSL** Ram Crew Cab 2500 (6.4 ft. Box) (Excl. 2500 2wd) - Brackets Only	Y	26 lbs.	401437	227.00
Polished	14-15	Ram Crew Cab 2500 (6.4 ft. Box) - Boards Only	N	48 lbs.	477102	600.00
	13-17	Ram Crew Cab 3500 (6.4 ft. Box) - Brackets Only	Y	32 lbs.	401338	244.00
Polished	13-17	Ram Crew Cab 3500 (6.4 ft. Box) - Boards Only	N	48 lbs.	477102	600.00
	13-15	**WSL** Ram Crew Cab 3500 (6.4 ft. Box) (Excl. 3500 2wd) - Brackets Only	Y	26 lbs.	401337	227.00
Polished	13-15	Ram Crew Cab 3500 (6.4 ft. Box) - Boards Only	N	48 lbs.	477102	600.00
	10-12	**WSL** Ram Mega Cab 2500, 3500 (6.4 ft. Box) (Also fits 2013 2500) (Excl. 2500 2wd) - Brackets Only	Y	26 lbs.	401037	236.00
Polished	10-12	Ram Mega Cab 2500, 3500 (6.4 ft. Box) - Boards Only	N	52 lbs.	477114	643.00
	14-17	Ram Mega Cab 2500 (6.4 ft. Box) - Brackets Only	Y	26 lbs.	401438	244.00
Polished	14-17	Ram Mega Cab 2500 (6.4 ft. Box) - Boards Only	N	52 lbs.	477114	643.00
	14-15	**WSL** Ram Mega Cab 2500 (6.4 ft. Box) (Excl. 2500 2wd) - Brackets Only	Y	26 lbs.	401437	227.00
Polished	14-15	Ram Mega Cab 2500 (6.4 ft. Box) - Boards Only	N	52 lbs.	477114	643.00
	13-17	Ram Mega Cab 3500 (6.4 ft. Box) - Brackets Only	Y	32 lbs.	401338	244.00
Polished	13-17	Ram Mega Cab 3500 (6.4 ft. Box) - Boards Only	N	52 lbs.	477114	643.00
	13-15	**WSL** Ram Mega Cab 3500 (6.4 ft. Box) (Excl. 3500 2wd) - Brackets Only	Y	26 lbs.	401337	227.00
Polished	13-15	Ram Mega Cab 3500 (6.4 ft. Box) - Boards Only	N	52 lbs.	477114	643.00

Finish	Year	Description	FDX	Weight	Item #	Retail
		REGAL 7 OVAL STEP - WHEEL-TO-WHEEL - Rocker Mount Installation (GAS or DIESEL)				
		RAM				
	10-12	**WSL** Ram Crew Cab 2500, 3500 (8 ft. Box) (Also fits 2013 2500) (Excl. 2500 2wd) - Brackets Only	Y	26 lbs.	401037	236.00
Polished	10-12	Ram Crew Cab 2500, 3500 (8 ft. Box) - Boards Only	N	60 lbs.	477125	707.00
	14-17	Ram Crew Cab 2500 (8 ft. Box) - Brackets Only	Y	26 lbs.	401438	244.00
Polished	14-17	Ram Crew Cab 2500 (8 ft. Box) - Boards Only	N	60 lbs.	477125	707.00
	14-15	**WSL** Ram Crew Cab 2500 (8 ft. Box) (Excl. 2500 2wd) - Brackets Only	Y	26 lbs.	401437	227.00
Polished	14-15	Ram Crew Cab 2500 (8 ft. Box) - Boards Only	N	60 lbs.	477125	707.00
	13-17	Ram Crew Cab 3500 (8 ft. Box) - Brackets Only	Y	32 lbs.	401338	244.00
Polished	13-17	Ram Crew Cab 3500 (8 ft. Box) - Boards Only	N	60 lbs.	477125	707.00
	13-17	**WSL** Ram Crew Cab 3500 (8 ft. Box) (Excl. 3500 2wd) - Brackets Only	Y	26 lbs.	401337	227.00
Polished	13-17	Ram Crew Cab 3500 (8 ft. Box) - Boards Only	N	60 lbs.	477125	707.00
		REGAL 7 OVAL STEP - WHEEL-TO-WHEEL - Body Mount Installation (GAS or DIESEL)				
		RAM				
	09-17	Ram Regular Cab 1500 (8 ft. Box) - Brackets Only	Y	50 lbs.	400939	283.00
Polished	09-17	Ram Regular Cab 1500 (8 ft. Box) - Boards Only	Y	44 lbs.	477093	550.00
	09-17	Ram Quad Cab 1500 (6.4 ft. Box) - Brackets Only	Y	50 lbs.	400939	283.00
Polished	09-17	Ram Quad Cab 1500 (6.4 ft. Box) - Boards Only	Y	46 lbs.	477097	586.00
	09-17	Ram Crew Cab 1500 (5.7 ft. Box) - Brackets Only	Y	50 lbs.	400939	283.00
Polished	09-17	Ram Crew Cab 1500 (5.7 ft. Box) - Boards Only	Y	47 lbs.	477096	593.00
	09-17	Ram Crew Cab 1500 (6.4 ft. Box) - Brackets Only	Y	50 lbs.	400939	283.00
Polished	09-17	Ram Crew Cab 1500 (6.4 ft. Box) - Boards Only	N	48 lbs.	477102	600.00
	14-17	Ram Regular Cab 2500 (8 ft. Box) - Brackets Only	Y	45 lbs.	401439	279.00
Polished	14-17	Ram Regular Cab 2500 (8 ft. Box) - Boards Only	Y	43 lbs.	477093	550.00
	13-17	Ram Regular Cab 3500 (8 ft. Box) - Brackets Only	Y	45 lbs.	401339	279.00
Polished	13-17	Ram Regular Cab 3500 (8 ft. Box) - Boards Only	Y	43 lbs.	477093	550.00
	14-17	Ram Crew Cab 2500 (6.4 ft. Box) (Excl. 2500 2wd) - Brackets Only	Y	45 lbs.	401439	279.00
Polished	14-17	Ram Crew Cab 2500 (6.4 ft. Box) - Boards Only	N	48 lbs.	477102	600.00
	13-17	Ram Crew Cab 3500 (6.4 ft. Box) (Excl. 3500 2wd) - Brackets Only	Y	45 lbs.	401339	279.00
Polished	13-17	Ram Crew Cab 3500 (6.4 ft. Box) - Boards Only	N	48 lbs.	477102	600.00
	14-17	Ram Mega Cab 2500 (6.4 ft. Box) (Excl. 2500 2wd) - Brackets Only	Y	45 lbs.	401439	279.00
Polished	14-17	Ram Mega Cab 2500 (6.4 ft. Box) - Boards Only	N	52 lbs.	477114	643.00
	13-17	Ram Mega Cab 3500 (6.4 ft. Box) (Excl. 3500 2wd) - Brackets Only	Y	45 lbs.	401339	279.00
Polished	13-17	Ram Mega Cab 3500 (6.4 ft. Box) - Boards Only	N	52 lbs.	477114	643.00
	14-17	Ram Crew Cab 2500 (8 ft. Box) (Excl. 2500 2wd) - Brackets Only	Y	45 lbs.	401439	279.00
Polished	14-17	Ram Crew Cab 2500 (8 ft. Box) - Boards Only	N	60 lbs.	477125	707.00
	13-17	Ram Crew Cab 3500 (8 ft. Box) (Excl. 3500 2wd) - Brackets Only	Y	45 lbs.	401339	279.00
Polished	13-17	Ram Crew Cab 3500 (8 ft. Box) - Boards Only	N	60 lbs.	477125	707.00
		REGAL 7 OVAL STEP - WHEEL-TO-WHEEL				
		FORD				
	15-17	F-150 Regular Cab (8 ft. Box) - Brackets Only	Y	25 lbs.	401529	236.00
Polished	15-17	F-150 Regular Cab (8 ft. Box) - Boards Only	Y	44 lbs.	477093	550.00
	09-14	F-150 Regular Cab (8 ft. Box) - Brackets Only	Y	18 lbs.	400929	234.00
Polished	09-14	F-150 Regular Cab (8 ft. Box) - Boards Only	Y	44 lbs.	477093	550.00
	15-17	F-150 Super Cab (6.5 ft. Box) - Brackets Only	Y	25 lbs.	401529	236.00
Polished	15-17	F-150 Super Cab (6.5 ft. Box) - Boards Only	N	48 lbs.	477101	600.00
	09-14	F-150 Super Cab (6.5 ft. Box) - Brackets Only	Y	18 lbs.	400929	234.00
Polished	09-14	F-150 Super Cab (6.5 ft. Box) - Boards Only	N	48 lbs.	477101	600.00
	15-17	F-150 Super Cab (8 ft. Box) - Brackets Only	Y	25 lbs.	401529	236.00
Polished	15-17	F-150 Super Cab (8 ft. Box) - Boards Only	N	52 lbs.	477113	657.00
	09-14	F-150 Super Cab (8 ft. Box) - Brackets Only	Y	18 lbs.	400929	234.00
Polished	09-14	F-150 Super Cab (8 ft. Box) - Boards Only	N	52 lbs.	477113	657.00
	15-17	F-150 Super Crew (5.5 ft. Box) - Brackets Only	Y	25 lbs.	401529	236.00
Polished	15-17	F-150 Super Crew (5.5 ft. Box) - Boards Only	N	48 lbs.	477102	600.00
	09-14	F-150 Super Crew (5.5 ft. Box) - Brackets Only	Y	18 lbs.	400929	234.00
Polished	09-14	F-150 Super Crew (5.5 ft. Box) - Boards Only	N	48 lbs.	477102	600.00
	15-17	F-150 Super Crew (6.5 ft. Box) - Brackets Only	Y	25 lbs.	401529	236.00
Polished	15-17	F-150 Super Crew (6.5 ft. Box) - Boards Only	N	51 lbs.	477108	629.00
	09-14	F-150 Super Crew (6.5 ft. Box) - Brackets Only	Y	18 lbs.	400929	234.00
Polished	09-14	F-150 Super Crew (6.5 ft. Box) - Boards Only	N	51 lbs.	477108	629.00

Finish	Year	Description		FDX	Weight	Item #	Retail
		REGAL 7 OVAL STEP - WHEEL-TO-WHEEL					
		FORD					
	2017	F-Series Super Duty Regular Cab (8 ft. Box) - Brackets Only		Y	26 lbs.	401729	236.00
Polished	2017	F-Series Super Duty Regular Cab (8 ft. Box) - Boards Only		Y	43 lbs.	477093	550.00
	08-16	F-Series Super Duty Regular Cab (8 ft. Box) - Brackets Only		Y	25 lbs.	400829	234.00
Polished	08-16	F-Series Super Duty Regular Cab (8 ft. Box) - Boards Only		Y	43 lbs.	477093	550.00
	2017	F-Series Super Duty Super Cab (6.75 ft. Box) - Brackets Only		Y	26 lbs.	401729	236.00
Polished	2017	F-Series Super Duty Super Cab (6.5 ft. Box) - Boards Only		Y	48 lbs.	477101	600.00
	08-16	F-Series Super Duty Super Cab (6.75 ft. Box) - Brackets Only		Y	25 lbs.	400829	234.00
Polished	08-16	F-Series Super Duty Super Cab (6.5 ft. Box) - Boards Only		Y	46 lbs.	477097	586.00
	2017	F-Series Super Duty Super Cab/Super Cab Dual Wheel (8 ft. Box) - Brackets Only		Y	26 lbs.	401729	236.00
Polished	2017	F-Series Super Duty Super Cab/Super Cab Dual Wheel (8 ft. Box) - Boards Only		N	52 lbs.	477113	657.00
	08-16	F-Series Super Duty Super Cab/Super Cab Dual Wheel (8 ft. Box) - Brackets Only		Y	25 lbs.	400829	234.00
Polished	08-16	F-Series Super Duty Super Cab/Super Cab Dual Wheel (8 ft. Box) - Boards Only		N	52 lbs.	477113	657.00
	2017	F-Series Super Duty Crew Cab (6.75 ft. Box) - Brackets Only		Y	26 lbs.	401729	236.00
Polished	2017	F-Series Super Duty Crew Cab (6.75 ft. Box) - Boards Only		N	51 lbs.	477108	629.00
	08-16	F-Series Super Duty Crew Cab (6.75 ft. Box) - Brackets Only		Y	25 lbs.	400829	234.00
Polished	08-16	F-Series Super Duty Crew Cab (6.75 ft. Box) - Boards Only		N	52 lbs.	477114	643.00
	2017	F-Series Super Duty Crew Cab/Crew Cab Dual Wheel (8 ft. Box) - Brackets Only		Y	26 lbs.	401729	236.00
Polished	2017	F-Series Super Duty Crew Cab/Crew Cab Dual Wheel (8 ft. Box) - Boards Only		N	60 lbs.	477125	707.00
	08-16	F-Series Super Duty Crew Cab/Crew Cab Dual Wheel (8 ft. Box) - Brackets Only		Y	25 lbs.	400829	234.00
Polished	08-16	F-Series Super Duty Crew Cab/Crew Cab Dual Wheel (8 ft. Box) - Boards Only		N	60 lbs.	477125	707.00
		TOYOTA					
	07-17	Tundra Regular Cab (8 ft. Box) - Brackets Only		Y	29 lbs.	400757	240.00
Polished	07-17	Tundra Regular Cab (8 ft. Box) - Boards Only		Y	44 lbs.	477093	550.00
	07-17	Tundra Double Cab (6.5 ft. Box) - Brackets Only		Y	29 lbs.	400757	240.00
Polished	07-17	Tundra Double Cab (6.5 ft. Box) - Boards Only		N	48 lbs.	477101	600.00
	07-17	Tundra Double Cab (8 ft. Box) - Brackets Only		Y	29 lbs.	400757	240.00
Polished	07-17	Tundra Double Cab (8 ft. Box) - Boards Only		N	52 lbs.	477113	657.00
	07-17	Tundra CrewMax (5.7 ft. Box) - Brackets Only		Y	29 lbs.	400757	240.00
Polished	07-17	Tundra CrewMax (5.7 ft. Box) - Boards Only		N	48 lbs.	477102	600.00
		BAJA STEP - CAB LENGTH					
		CHEVROLET/GMC					
Black	14-17	Silverado/Sierra 1500 Regular Cab		Y	40 lbs.	431411	383.00
Black	01-17	Silverado/Sierra 2500HD/3500 Regular Cab		Y	40 lbs.	430711	371.00
Black	99-13	Silverado/Sierra 1500/2500HD/3500 Regular Cab		Y	40 lbs.	430711	371.00
Black	14-17	Silverado/Sierra 1500 Double Cab		Y	53 lbs.	431412	500.00
Black	99-13	Silverado/Sierra 1500/2500HD/3500 Extended Cab		Y	53 lbs.	430712	486.00
Black	15-17	Silverado/Sierra 2500HD/3500 Double Cab		Y	55 lbs.	431512	514.00
Black	14-17	Silverado/Sierra 1500 Crew Cab		Y	51 lbs.	431413	507.00
Black	01-17	Silverado/Sierra 2500HD/3500 Crew Cab		Y	51 lbs.	430713	500.00
Black	04-13	Silverado/Sierra 1500 Crew Cab		Y	51 lbs.	430713	500.00
Polished	14-17	**WSL** Silverado/Sierra 1500 Double Cab		Y	53 lbs.	491412	797.00
Polished	99-13	**WSL** Silverado/Sierra 1500/2500HD/3500 Extended Cab		Y	53 lbs.	490712	797.00
Polished	15-17	**WSL** Silverado/Sierra 2500HD/3500 Double Cab		Y	55 lbs.	491512	800.00
Polished	14-17	**WSL** Silverado/Sierra 1500 Crew Cab		Y	51 lbs.	491413	814.00
Polished	01-17	**WSL** Silverado/Sierra 2500HD/3500 Crew Cab		Y	51 lbs.	490713	793.00
Polished	04-13	**WSL** Silverado/Sierra 1500 Crew Cab		Y	51 lbs.	490713	793.00
		RAM					
Black	09-17	Ram 1500 Regular Cab (Also fits 11-17 Ram 3500/4500/5500 Chassis Cab - Req. Kit #551495 N/C)		Y	53 lbs.	431431	443.00
Black	09-17	Ram 1500 Quad Cab (02-08 Quad Cab Accessory Bracket Kit #430232 - $36.00)		Y	66 lbs.	431432	517.00
Black	09-17	Ram 1500 Crew Cab (Also fits 11-17 Ram 3500/4500/5500 Chassis Cab - Req. Kit #551495 N/C)		Y	70 lbs.	431433	529.00
Black	09-13	**WSL** Ram 1500 Crew Cab		Y	70 lbs.	430933	521.00
Black	10-17	Ram 2500, 3500 Regular Cab		Y	53 lbs.	431431	443.00
Black	10-17	Ram 2500, 3500 Crew Cab		Y	68 lbs.	431033	529.00
Black	10-17	Ram 2500, 3500 Mega Cab		Y	90 lbs.	431035	536.00
Polished	09-17	**WSL** Ram 1500 Quad Cab (02-08 Quad Cab Accessory Bracket Kit #430232 - $36.00)		Y	66 lbs.	491432	807.00
Polished	09-17	**WSL** Ram 1500 Crew Cab (Also 11-17 Ram 3500/4500/5500 Chassis Cab - Req. Kit #551495 N/C)		Y	70 lbs.	491433	843.00
Polished	10-17	**WSL** Ram 2500, 3500 Crew Cab		Y	68 lbs.	491033	829.00
Polished	10-17	**WSL** Ram 2500, 3500 Mega Cab		Y	90 lbs.	491035	850.00

Finish	Year	Description		FDX	Weight	Item #	Retail
		BAJA STEP - CAB LENGTH					
		FORD					
Black	04-14	F-150 Regular Cab		Y	47 lbs.	430921	479.00
Black	15-17	F-150 Super Cab		Y	68 lbs.	431522	607.00
Black	04-14	F-150 Super Cab		Y	64 lbs.	430422	564.00
Black	15-17	F-150 Super Crew		Y	75 lbs.	431523	621.00
Black	09-14	F-150 Super Crew		Y	71 lbs.	430923	586.00
Black	99-16	Super Duty Regular Cab		Y	47 lbs.	439921	457.00
Black	2017	Super Duty Super Cab		Y	68 lbs.	431522	607.00
Black	99-16	Super Duty Super Cab		Y	64 lbs.	439922	543.00
Black	2017	Super Duty Crew Cab		Y	75 lbs.	431523	621.00
Black	99-16	Super Duty Crew Cab		Y	71 lbs.	439923	564.00
Polished	04-14	**WSL** F-150 Super Cab		Y	64 lbs.	490422	886.00
Polished	09-14	**WSL** F-150 Super Crew		Y	71 lbs.	490923	907.00
Polished	99-16	**WSL** Super Duty Super Cab		Y	64 lbs.	499922	864.00
Polished	99-16	**WSL** Super Duty Crew Cab		Y	71 lbs.	499923	900.00
		TOYOTA					
Black	07-17	Tundra Double Cab		Y	53 lbs.	430752	529.00
Black	07-17	Tundra CrewMax		Y	55 lbs.	430753	543.00
Black	05-17	Tacoma Access Cab		Y	55 lbs.	431652	557.00
Black	05-15	**WSL** Tacoma Access Cab		Y	55 lbs.	430552	543.00
Black	05-17	Tacoma Double Cab		Y	61 lbs.	431653	579.00
Black	05-15	**WSL** Tacoma Double Cab		Y	61 lbs.	430553	557.00
Polished	07-17	**WSL** Tundra Double Cab		Y	53 lbs.	490752	836.00
Polished	07-17	**WSL** Tundra CrewMax		Y	55 lbs.	490753	864.00
		JEEP					
Black	07-17	Wrangler 4-Door - Removal of factory rock rails is required on all Jeep Rubicon models		Y	60 lbs.	430755	471.00
Black	07-17	Wrangler 2-Door - Removal of factory rock rails is required on all Jeep Rubicon models		Y	45 lbs.	430756	407.00
Polished	07-17	**WSL** Wrangler 4-Door - Removal of factory rock rails is required on all Jeep Rubicon models		Y	60 lbs.	490755	821.00
		BAJA STEP - WHEEL-TO-WHEEL					
		CHEVROLET/GMC					
Black	99-13	Silverado/GMC Sierra 1500 Extended Cab - 6.5 ft. Box		Y	83 lbs.	430717	736.00
Black	01-14	Silverado/GMC Sierra 2500HD/3500 Extended Cab - 6.5 ft. Box		Y	83 lbs.	430717	736.00
Black	14-17	Silverado/GMC Sierra 1500 Crew Cab - 6.5 ft. Box		N	81 lbs.	431419	736.00
Black	01-17	Silverado/GMC Sierra 2500HD/3500 Crew Cab - 6.5 ft. Box		N	81 lbs.	430719	729.00
		RAM					
Black	10-17	Ram 2500, 3500 Crew Cab - 6.4 ft. Box		N	88 lbs.	431039	771.00
		FORD					
Black	99-16	Super Duty Super Cab - 6.5 ft. Box		Y	75 lbs.	439927	749.00
Black	99-16	Super Duty Crew Cab - 6.5 ft. Box		N	77 lbs.	439929	779.00

Finish	Year	Description		FDX	Weight	Item #	Retail
		SIDE ENTRY STEPS - Rocker Mount Installation (GAS)					
		CHEVROLET/GMC					
	14-17	Silverado/Sierra 1500 Regular Cab - Brackets Only		Y	18 lbs.	581441	76.00
SST	14-17	Silverado/Sierra 1500 Regular Cab - Boards Only		Y	21 lbs.	480741	263.00
	07-13	Silverado/Sierra 1500 Regular Cab - Brackets Only		Y	20 lbs.	580741	67.00
SST	07-13	Silverado/Sierra 1500 Regular Cab - Boards Only		Y	21 lbs.	480741	263.00
SST	07-13	Silverado/Sierra 1500 Regular Cab		Y	44 lbs.	480711	326.00
	15-17	Silverado/Sierra 2500HD/3500 Regular Cab - Brackets Only		Y	18 lbs.	581441	76.00
SST	15-17	Silverado/Sierra 2500HD/3500 Regular Cab - Boards Only		Y	21 lbs.	480741	263.00
	07-14	Silverado/Sierra 2500HD/3500 Regular Cab - Brackets Only		Y	20 lbs.	580741	67.00
SST	07-14	Silverado/Sierra 2500HD/3500 Regular Cab - Boards Only		Y	21 lbs.	480741	263.00
SST	07-14	Silverado/Sierra 2500HD/3500 Regular Cab		Y	44 lbs.	480711	326.00
	14-17	Silverado/Sierra 1500 Double Cab - Brackets Only		Y	22 lbs.	581442	100.00
SST	14-17	Silverado/Sierra 1500 Double Cab - Boards Only		Y	34 lbs.	481442	343.00
	07-13	Silverado/Sierra 1500 Extended Cab - Brackets Only		Y	15 lbs.	580742	94.00
SST	07-13	Silverado/Sierra 1500 Extended Cab - Boards Only		Y	34 lbs.	480742	314.00
SST	07-13	Silverado/Sierra 1500 Extended Cab		Y	60 lbs.	480712	403.00
	15-17	Silverado/Sierra 2500HD/3500 Double Cab - Brackets Only		Y	22 lbs.	581442	100.00
SST	15-17	Silverado/Sierra 2500HD/3500 Double Cab - Boards Only		Y	34 lbs.	481442	343.00
	07-13	Silverado/Sierra 2500HD/3500 Extended Cab - Brackets Only		Y	15 lbs.	580742	94.00
SST	07-13	Silverado/Sierra 2500HD/3500 Extended Cab - Boards Only		Y	34 lbs.	480742	314.00
SST	07-14	Silverado/Sierra 2500HD/3500 Extended Cab		Y	60 lbs.	480712	403.00
	14-17	Silverado/Sierra 1500 Crew Cab - Brackets Only		Y	25 lbs.	581443	126.00
SST	14-17	Silverado/Sierra 1500 Crew Cab - Boards Only		Y	38 lbs.	480743	357.00
	07-13	Silverado/Sierra 1500 Crew Cab - Brackets Only		Y	35 lbs.	580743	106.00
SST	07-13	Silverado/Sierra 1500 Crew Cab - Boards Only		Y	38 lbs.	480743	357.00
	07-17	Silverado/Sierra 2500HD/3500 Crew Cab - Brackets Only		Y	25 lbs.	581443	126.00
SST	07-17	Silverado/Sierra 2500HD/3500 Crew Cab - Boards Only		Y	38 lbs.	480743	357.00
	14-17	Silverado/Sierra 1500 Regular Cab - Brackets Only		Y	18 lbs.	581441	76.00
Black	14-17	Silverado/Sierra 1500 Regular Cab - Boards Only		Y	22 lbs.	280741	263.00
	07-13	Silverado/Sierra 1500 Regular Cab - Brackets Only		Y	20 lbs.	580741	67.00
Black	07-13	Silverado/Sierra 1500 Regular Cab - Boards Only		Y	22 lbs.	280741	263.00
	14-17	Silverado/Sierra 1500 Double Cab - Brackets Only		Y	22 lbs.	581442	100.00
Black	14-17	Silverado/Sierra 1500 Double Cab - Boards Only		Y	34 lbs.	281442	343.00
	15-17	Silverado/Sierra 2500HD/3500 Regular Cab - Brackets Only		Y	18 lbs.	581441	76.00
Black	15-17	Silverado/Sierra 2500HD/3500 Regular Cab - Boards Only		Y	22 lbs.	280741	263.00
	07-14	Silverado/Sierra 2500HD/3500 Regular Cab - Brackets Only		Y	20 lbs.	580741	67.00
Black	07-14	Silverado/Sierra 2500HD/3500 Regular Cab - Boards Only		Y	22 lbs.	280741	263.00
	15-17	Silverado/Sierra 2500HD/3500 Double Cab - Brackets Only		Y	22 lbs.	581442	100.00
Black	15-17	Silverado/Sierra 2500HD/3500 Double Cab - Boards Only		Y	34 lbs.	281442	343.00
	14-17	Silverado/Sierra 1500 Crew Cab - Brackets Only		Y	25 lbs.	581443	126.00
Black	14-17	Silverado/Sierra 1500 Crew Cab - Boards Only		Y	38 lbs.	280743	357.00
	07-13	Silverado/Sierra 1500 Crew Cab - Brackets Only		Y	35 lbs.	580743	106.00
Black	07-13	Silverado/Sierra 1500 Crew Cab - Boards Only		Y	38 lbs.	280743	357.00
	07-14	Silverado/Sierra 2500HD/3500 Crew Cab - Brackets Only		Y	35 lbs.	580743	106.00
Black	07-14	Silverado/Sierra 2500HD/3500 Crew Cab - Boards Only		Y	38 lbs.	280743	357.00
	15-17	Silverado/Sierra 2500HD/3500 Crew Cab - Brackets Only		Y	25 lbs.	581443	126.00
Black	15-17	Silverado/Sierra 2500HD/3500 Crew Cab - Boards Only		Y	38 lbs.	280743	357.00
		SIDE ENTRY STEPS - Body Mount Installation (GAS OR DIESEL)					
		CHEVROLET/GMC					
SST	99-13	Silverado/Sierra 1500 Regular Cab		Y	39 lbs.	481511	343.00
	99-13	Silverado/Sierra 1500 Regular Cab - Brackets Only		Y	25 lbs.	581141	103.00
SST	99-13	Silverado/Sierra 1500 Regular Cab - Boards Only		Y	21 lbs.	481141	264.00
	15-17	Silverado/Sierra 2500HD/3500 Regular Cab - Brackets Only		Y	24 lbs.	581541	106.00
SST	15-17	Silverado/Sierra 2500HD/3500 Regular Cab - Boards Only		Y	21 lbs.	481141	264.00
SST	01-14	Silverado/Sierra 2500HD/3500 Regular Cab		Y	37 lbs.	481111	339.00
	01-14	Silverado/Sierra 2500HD/3500 Regular Cab - Brackets Only		Y	25 lbs.	581141	103.00
SST	01-14	Silverado/Sierra 2500HD/3500 Regular Cab - Boards Only		Y	21 lbs.	481141	264.00
	99-13	Silverado/Sierra 1500 Extended Cab (Excludes “SS” Models) - Brackets Only		Y	38 lbs.	581143	151.00
SST	99-13	Silverado/Sierra 1500 Extended Cab (Excludes “SS” Models) - Boards Only		Y	34 lbs.	481142	350.00
SST	15-17	Silverado/Sierra 2500HD/3500 Double Cab (w/Factory Flaps)		Y	58 lbs.	481512	466.00
	01-14	Silverado/Sierra 2500HD/3500 Extended Cab - Brackets Only		Y	38 lbs.	581143	151.00
SST	01-14	Silverado/Sierra 2500HD/3500 Extended Cab - Boards Only		Y	34 lbs.	481142	350.00
	99-13	Silverado/Sierra 1500 Crew Cab - Brackets Only		Y	38 lbs.	581143	151.00
SST	99-13	Silverado/Sierra 1500 Crew Cab - Boards Only		Y	38 lbs.	481143	357.00
	15-17	Silverado/Sierra 2500HD/3500 Crew Cab - Brackets Only		Y	27 lbs.	581543	151.00
SST	15-17	Silverado/Sierra 2500HD/3500 Crew Cab - Boards Only		Y	38 lbs.	481143	357.00
SST	15-17	Silverado/Sierra 2500HD/3500 Crew Cab (w/Factory Flaps)		Y	62 lbs.	481513	489.00
	01-14	Silverado/Sierra 2500HD/3500 Crew Cab - Brackets Only		Y	38 lbs.	581143	151.00
SST	01-14	Silverado/Sierra 2500HD/3500 Crew Cab - Boards Only		Y	38 lbs.	481143	357.00

Finish	Year	Description		FDX	Weight	Item #	Retail
		SIDE ENTRY STEPS - Body Mount Installation (GAS OR DIESEL)					
		CHEVROLET/GMC					
	99-13	Silverado/Sierra 1500 Regular Cab - Brackets Only		Y	25 lbs.	581141	103.00
Black	99-13	Silverado/Sierra 1500 Regular Cab - Boards Only		Y	21 lbs.	281141	264.00
	15-17	Silverado/Sierra 2500HD/3500 Regular Cab - Brackets Only		Y	24 lbs.	581541	106.00
Black	15-17	Silverado/Sierra 2500HD/3500 Regular Cab - Boards Only		Y	21 lbs.	281141	264.00
	01-14	Silverado/Sierra 2500HD/3500 Regular Cab - Brackets Only		Y	25 lbs.	581141	103.00
Black	01-14	Silverado/Sierra 2500HD/3500 Regular Cab - Boards Only		Y	21 lbs.	281141	264.00
	15-17	Silverado/Sierra 2500HD/3500 Double Cab - Brackets Only		Y	27 lbs.	581543	151.00
Black	15-17	Silverado/Sierra 2500HD/3500 Double Cab - Boards Only		Y	34 lbs.	281542	343.00
	99-13	Silverado/Sierra 1500 Crew Cab - Brackets Only		Y	38 lbs.	581143	151.00
Black	99-13	Silverado/Sierra 1500 Crew Cab - Boards Only		Y	38 lbs.	281143	357.00
	15-17	Silverado/Sierra 2500HD/3500 Crew Cab - Brackets Only		Y	27 lbs.	581543	151.00
Black	15-17	Silverado/Sierra 2500HD/3500 Crew Cab - Boards Only		Y	38 lbs.	281143	357.00
	01-14	Silverado/Sierra 2500HD/3500 Crew Cab - Brackets Only		Y	38 lbs.	581143	151.00
Black	01-14	Silverado/Sierra 2500HD/3500 Crew Cab - Boards Only		Y	38 lbs.	281143	357.00
		SIDE ENTRY STEPS					
		CHEVROLET/GMC					
SST	14-17	Silverado/Sierra 1500 Standard Box Extension (6.5 ft. Box)		Y	56 lbs.	481518	344.00
SST	99-13	Silverado/Sierra 1500 Standard Box Extension (6.5 ft. Box)		Y	31 lbs.	549425	321.00
SST	14-17	Silverado/Sierra 1500 Long Box Extension (8 ft. Box)		Y	61 lbs.	481519	384.00
SST	99-13	Silverado/Sierra 1500 Long Box Extension (8 ft. Box)		Y	43 lbs.	549440	379.00
SST	15-17	Silverado/Sierra 2500HD Standard Box Extension (6.5 ft. Box)		Y	56 lbs.	481518	344.00
SST	01-14	Silverado/Sierra 2500HD Standard Box Extension (6.5 ft. Box)		Y	31 lbs.	549425	321.00
SST	15-17	Silverado/Sierra 2500HD/3500 Long Box Extension (8 ft. Box)		Y	61 lbs.	481519	384.00
SST	01-14	Silverado/Sierra 2500HD/3500 Long Box Extension (8 ft. Box)		Y	43 lbs.	549440	379.00
SST	15-17	Silverado/Sierra Dual Wheel Box Extension (8 ft. Box)		Y	80 lbs.	481514	571.00
SST	07-14	Silverado/Sierra Dual Wheel Box Extension (8 ft. Box)		Y	60 lbs.	480714	557.00
	15-17	Colorado/Canyon Extended Cab - Brackets Only		Y	14 lbs.	571515	143.00
SST	15-17	Colorado/Canyon Extended Cab - Boards Only		Y	29 lbs.	481510	314.00
	15-17	Colorado/Canyon Crew Cab - Brackets Only		Y	14 lbs.	571515	143.00
SST	15-17	Colorado/Canyon Crew Cab - Boards Only		Y	32 lbs.	481515	314.00
SST	04-14	Colorado/Canyon Extended/Crew Cab (W2W Application)		Y	57 lbs.	480412	519.00
	14-17	Silverado Modified Front Side Entry Step End Caps - for use with Factory Flaps - Chevrolet Only		Y	1 lb.	480014	14.00
	14-17	Silverado/Sierra Side Entry Step Bracket Extension Option - Not necessary with separate boards/brackets		Y	5 lbs.	480010	37.00
		SIDE ENTRY STEPS - Rocker Mount Installation (GAS OR DIESEL)					
		DODGE/RAM					
	09-17	Ram 1500 Regular Cab - Brackets Only		Y	16 lbs.	571631	136.00
SST	09-17	Ram 1500 Regular Cab - Boards Only		Y	21 lbs.	481031	230.00
SST	09-14	**WSL** Ram Regular Cab 1500		Y	36 lbs.	480931	343.00
	10-17	Ram 2500, 3500 Regular Cab - Brackets Only		Y	16 lbs.	571631	136.00
SST	10-17	Ram 2500, 3500 Regular Cab - Boards Only		Y	21 lbs.	481031	230.00
SST	10-15	**WSL** Ram Regular Cab 2500, 3500		Y	36 lbs.	480931	343.00
	11-17	Ram Regular Cab 3500, 4500, 5500 Chassis Cab - Brackets Only		Y	16 lbs.	571631	136.00
SST	11-17	Ram Regular Cab 3500, 4500, 5500 Chassis Cab - Boards Only		Y	21 lbs.	481031	230.00
SST	11-15	**WSL** Ram Regular Cab 3500, 4500, 5500 Chassis Cab		Y	36 lbs.	480931	343.00
SST	02-08	Ram Regular Cab 1500		Y	38 lbs.	550950	331.00
SST	03-09	Ram Regular Cab 2500, 3500 (Also fits 08-10 Ram/Sterling Regular Cab 4500, 5500)		Y	38 lbs.	550950	331.00
	09-17	Ram 1500 Quad Cab - Brackets Only		Y	21 lbs.	571632	194.00
SST	09-17	Ram 1500 Quad Cab - Boards Only		Y	27 lbs.	481032	300.00
SST	09-14	**WSL** Ram Quad Cab 1500		Y	50 lbs.	480932	421.00
SST	02-08	Ram Quad Cab 1500		Y	51 lbs.	550960	407.00
SST	03-09	Ram Quad Cab 2500, 3500 (Also fits 08-10 Ram/Sterling Quad Cab 4500, 5500)		Y	51 lbs.	550960	407.00
	09-17	Ram 1500 Crew Cab - Brackets Only		Y	21 lbs.	571632	194.00
SST	09-17	Ram 1500 Crew Cab - Boards Only		Y	36 lbs.	481033	320.00
SST	09-14	**WSL** Ram Crew Cab 1500		Y	53 lbs.	480933	449.00
	10-17	Ram 2500, 3500 Crew Cab - Brackets Only		Y	21 lbs.	571632	194.00
SST	10-17	Ram 2500, 3500 Crew Cab - Boards Only		Y	36 lbs.	481033	320.00
SST	10-15	**WSL** Ram Crew Cab 2500, 3500		Y	53 lbs.	480933	449.00
	11-17	Ram Crew Cab 3500, 4500, 5500 Chassis Cab - Brackets Only		Y	21 lbs.	571632	194.00
SST	11-17	Ram Crew Cab 3500, 4500, 5500 Chassis Cab - Boards Only		Y	36 lbs.	481033	320.00

Finish	Year	Description	FDX	Weight	Item #	Retail
		SIDE ENTRY STEPS - Rocker Mount Installation (GAS OR DIESEL)				
		DODGE/RAM				
SST	11-15	**WSL** Ram Crew Cab 3500, 4500, 5500 Chassis Cab	Y	53 lbs.	480933	449.00
SST	10-14	**WSL** Ram Mega Cab 2500, 3500	Y	58 lbs.	481035	471.00
SST	09-14	Ram 1500 Short Box Extension (6.4 ft. Box) (Requires ACC Kit #550290) (Excludes RAMBOX)	Y	31 lbs.	481038	380.00
SST		ACC Kit for Ram 1500 Short Box Extension (6.4 ft. Box)	Y	4 lbs.	550290	39.00
SST	10-17	Ram 2500, 3500 Short Box Extension (Excludes 15-17 3500 with Rear Air Suspension)	Y	31 lbs.	481038	380.00
SST	02-08	**WSL** Ram Regular/Quad Cab Short Box Extension (Also fits 06-09 Ram Mega Cab Dual Wheel)	Y	30 lbs.	550000	366.00
SST	09-14	Ram 1500 Long Box Extension (8 ft. Box) (Requires ACC Kit #550295)	Y	59 lbs.	481039	539.00
SST		ACC Kit for Ram 1500 Long Box Extension (8 ft. Box)	Y	8 lbs.	550295	57.00
SST	10-17	Ram 2500, 3500 Long Box Extension (8 ft. Box) (Excludes 15-17 3500 with Rear Air Suspension)	Y	59 lbs.	481039	539.00
SST	02-08	**WSL** Ram Regular/Quad Cab Long Box Extension (Also fits 03-09 Ram 2500, 3500)	Y	56 lbs.	550020	526.00
SST	13-17	Ram 3500 Dual Wheel Box Extension (8 ft. Box) (Excl. 2015+ 3500 w/factory air suspension)	Y	83 lbs.	481334	671.00
SST	10-12	Ram 3500 Dual Wheel Box Extension (8 ft. Box)	Y	83 lbs.	481034	657.00
SST	03-09	**WSL** Ram 3500 Dual Wheel Box Extension	Y	77 lbs.	550035	663.00
SST	05-11	**WSL** Dakota Quad Cab - 4-door	Y	68 lbs.	480533	523.00
SST	04-09	**WSL** Durango (Also fits 07-09 Chrysler Aspen)	Y	48 lbs.	480434	401.00
	09-17	Ram Regular Cab 1500 - Brackets Only	Y	16 lbs.	571631	136.00
Black	09-17	Ram Regular Cab 1500 - Boards Only	Y	21 lbs.	281031	230.00
	10-17	Ram Regular Cab 2500, 3500 - Brackets Only	Y	16 lbs.	571631	136.00
Black	10-17	Ram Regular Cab 2500, 3500 - Boards Only	Y	21 lbs.	281031	230.00
	11-17	Ram Regular Cab 3500, 4500, 5500 Chassis Cab - Brackets Only	Y	16 lbs.	571631	136.00
Black	11-17	Ram Regular Cab 3500, 4500, 5500 Chassis Cab - Boards Only	Y	21 lbs.	281031	230.00
	09-17	Ram Quad Cab 1500 - Brackets Only	Y	21 lbs.	571632	194.00
Black	09-17	Ram Quad Cab 1500 - Boards Only	Y	27 lbs.	281032	300.00
	09-17	Ram Crew Cab 1500 - Brackets Only	Y	21 lbs.	571632	194.00
Black	09-17	Ram Crew Cab 1500 - Boards Only	Y	36 lbs.	281033	320.00
	10-17	Ram Crew Cab 2500, 3500 - Brackets Only	Y	21 lbs.	571632	194.00
Black	10-17	Ram Crew Cab 2500, 3500 - Boards Only	Y	36 lbs.	281033	320.00
	11-17	Ram Crew Cab 3500, 4500, 5500 Chassis Cab - Brackets Only	Y	21 lbs.	571632	194.00
Black	11-17	Ram Crew Cab 3500, 4500, 5500 Chassis Cab - Boards Only	Y	36 lbs.	281033	320.00
		SIDE ENTRY STEPS - Body Mount Installation (GAS OR DIESEL)				
		RAM				
	09-17	Ram Regular Cab 1500 - Brackets Only	Y	35 lbs.	571031	164.00
SST	09-17	Ram Regular Cab 1500 - Boards Only	Y	21 lbs.	481031	230.00
	10-17	Ram Regular Cab 2500, 3500 - Brackets Only	Y	35 lbs.	571031	164.00
SST	10-17	Ram Regular Cab 2500, 3500 - Boards Only	Y	21 lbs.	481031	230.00
	11-17	Ram Regular Cab 3500, 4500, 5500 Chassis Cab - Brackets Only (Chassis Cab Req. Acc Kit #571300 N/C	Y	35 lbs.	571031	164.00
SST	11-17	Ram Regular Cab 3500, 4500, 5500 Chassis Cab - Boards Only	Y	21 lbs.	481031	230.00
	09-17	Ram Quad Cab 1500 - Brackets Only	Y	40 lbs.	571032	214.00
SST	09-17	Ram Quad Cab 1500 - Boards Only	Y	27 lbs.	481032	300.00
	09-17	Ram Crew Cab 1500 - Brackets Only	Y	40 lbs.	571032	214.00
SST	09-17	Ram Crew Cab 1500 - Boards Only	Y	36 lbs.	481033	320.00
	10-17	Ram Crew Cab 2500, 3500 - Brackets Only (Chassis Cab Requires Accessory Kit #571300 N/C)	Y	40 lbs.	571032	214.00
SST	10-17	Ram Crew Cab 2500, 3500 - Boards Only	Y	36 lbs.	481033	320.00
	09-17	Ram Regular Cab 1500 - Brackets Only	Y	35 lbs.	571031	164.00
Black	09-17	Ram Regular Cab 1500 - Boards Only	Y	21 lbs.	281031	230.00
	10-17	Ram Regular Cab 2500, 3500 - Brackets Only	Y	35 lbs.	571031	164.00
Black	10-17	Ram Regular Cab 2500, 3500 - Boards Only	Y	21 lbs.	281031	230.00
	11-17	Ram Regular Cab 3500, 4500, 5500 Chassis Cab - Brackets Only (Chassis Cab Req. Acc Kit #571300 N/C	Y	35 lbs.	571031	164.00
Black	11-17	Ram Regular Cab 3500, 4500, 5500 Chassis Cab - Boards Only	Y	21 lbs.	281031	230.00
	09-17	Ram Quad Cab 1500 - Brackets Only	Y	40 lbs.	571032	214.00
Black	09-17	Ram Quad Cab 1500 - Boards Only	Y	27 lbs.	281032	300.00
	09-17	Ram Crew Cab 1500 - Brackets Only	Y	40 lbs.	571032	214.00
Black	09-17	Ram Crew Cab 1500 - Boards Only	Y	36 lbs.	281033	320.00
	10-17	Ram Crew Cab 2500, 3500 - Brackets Only (Chassis Cab Requires Accessory Kit #571300 N/C)	Y	40 lbs.	571032	214.00
Black	10-17	Ram Crew Cab 2500, 3500 - Boards Only	Y	36 lbs.	281033	320.00

Finish	Year	Description		FDX	Weight	Item #	Retail
		SIDE ENTRY STEPS					
		FORD					
	15-17	F-150 Regular Cab - Brackets Only		Y	9 lbs.	571521	106.00
SST	15-17	F-150 Regular Cab - Boards Only		Y	22 lbs.	481521	261.00
SST	04-14	F-150 Regular Cab		Y	37 lbs.	480421	334.00
	15-17	F-150 Super Cab - Brackets Only		Y	9 lbs.	571521	106.00
SST	15-17	F-150 Super Cab - Boards Only		Y	32 lbs.	481522	317.00
SST	04-14	F-150 Super Cab		Y	52 lbs.	480422	424.00
	15-17	F-150 Super Crew - Brackets Only		Y	13 lbs.	571523	140.00
SST	15-17	F-150 Super Crew - Boards Only		Y	38 lbs.	481523	339.00
SST	09-14	F-150 Super Crew		Y	56 lbs.	480923	466.00
SST	04-08	F-150 Super Crew (Also fits 05-08 Lincoln Mark LT Super Crew)		Y	55 lbs.	480423	436.00
	2017	Super Duty Regular Cab - Brackets Only		Y	9 lbs.	571521	106.00
SST	2017	Super Duty Regular Cab - Boards Only		Y	22 lbs.	481521	261.00
SST	99-16	Super Duty Regular Cab		Y	36 lbs.	549225	333.00
	2017	Super Duty Super Cab - Brackets Only		Y	9 lbs.	571521	106.00
SST	2017	Super Duty Super Cab - Boards Only		Y	32 lbs.	481522	317.00
SST	99-16	Super Duty Super Cab		Y	49 lbs.	549240	406.00
	2017	Super Duty Crew Cab - Brackets Only		Y	13 lbs.	571523	140.00
SST	2017	Super Duty Crew Cab - Boards Only		Y	38 lbs.	481523	339.00
SST	99-16	Super Duty Crew Cab		Y	60 lbs.	549275	449.00
SST	99-16	Super Duty Short Box Extension (6.5 ft. Box)		Y	30 lbs.	480828	314.00
SST	99-16	Super Duty Long Box Extension (8 ft. Box)		Y	48 lbs.	480829	437.00
SST	99-16	Super Duty Dual Wheel Box Extension		Y	63 lbs.	480824	574.00
SST	00-06	Excursion		Y	60 lbs.	549275	449.00
	15-17	F-150 Regular Cab - Brackets Only		Y	9 lbs.	571521	106.00
Black	15-17	F-150 Regular Cab - Boards Only		Y	23 lbs.	281521	261.00
	15-17	F-150 Super Cab - Brackets Only		Y	9 lbs.	571521	106.00
Black	15-17	F-150 Super Cab - Boards Only		Y	32 lbs.	281522	317.00
	15-17	F-150 Super Crew - Brackets Only		Y	13 lbs.	571523	140.00
Black	15-17	F-150 Super Crew - Boards Only		Y	38 lbs.	281523	339.00
	2017	Super Duty Regular Cab - Brackets Only		Y	9 lbs.	571521	106.00
Black	2017	Super Duty Regular Cab - Boards Only		Y	23 lbs.	281521	261.00
	99-16	Super Duty Regular Cab - Brackets Only		Y	13 lbs.	579921	120.00
Black	99-16	Super Duty Regular Cab - Boards Only		Y	19 lbs.	289921	223.00
	2017	Super Duty Super Cab - Brackets Only		Y	9 lbs.	571521	106.00
Black	2017	Super Duty Super Cab - Boards Only		Y	32 lbs.	281522	317.00
	99-16	Super Duty Super Cab - Brackets Only		Y	16 lbs.	579922	140.00
Black	99-16	Super Duty Super Cab - Boards Only		Y	29 lbs.	289922	413.00
	2017	Super Duty Crew Cab - Brackets Only		Y	13 lbs.	571523	140.00
Black	2017	Super Duty Crew Cab - Boards Only		Y	38 lbs.	281523	339.00
	99-16	Super Duty Crew Cab - Brackets Only		Y	16 lbs.	579922	140.00
Black	99-16	Super Duty Crew Cab - Boards Only		Y	37 lbs.	289923	467.00
		TOYOTA					
SST	07-17	Tundra Double Cab		Y	65 lbs.	480752	449.00
SST	07-17	Tundra CrewMax		Y	70 lbs.	480753	477.00
	07-17	Tundra Double Cab - Brackets Only		Y	16 lbs.	570752	149.00
Black	07-17	Tundra Double Cab - Boards Only		Y	33 lbs.	281652	300.00
	07-17	Tundra CrewMax- Brackets Only		Y	16 lbs.	570752	149.00
Black	07-17	Tundra CrewMax - Boards Only		Y	39 lbs.	281653	329.00

Finish	Year	Description		FDX	Weight	Item #	Retail
		3" NERF BARS					
		CHEVROLET/GMC					
Polished	14-17	Silverado/Sierra 1500 Regular Cab		Y	36 lbs.	461411	393.00
Polished	99-13	Silverado/Sierra 1500 Regular Cab		Y	36 lbs.	460711	389.00
Polished	15-17	Silverado/Sierra 2500HD/3500 Regular Cab		Y	36 lbs.	461411	393.00
Polished	01-14	Silverado/Sierra 2500HD/3500 Regular Cab		Y	36 lbs.	460711	389.00
Polished	14-17	Silverado/Sierra 1500 Double Cab		Y	53 lbs.	461412	443.00
Polished	99-13	Silverado/Sierra 1500 Extended Cab		Y	53 lbs.	460712	443.00
Polished	15-17	Silverado/Sierra 2500HD/3500 Double Cab		Y	53 lbs.	461512	450.00
Polished	01-14	Silverado/Sierra 2500HD/3500 Extended Cab		Y	53 lbs.	460712	443.00
Polished	88-98	**WSL** Extended Cab/3-door 1500 C/K		Y	53 lbs.	548520	541.00
Polished	92-00	**WSL** Extended Cab/3-door 2500, 3500 C/K		Y	53 lbs.	548520	541.00
Polished	14-17	Silverado/Sierra 1500 Crew Cab		Y	51 lbs.	461413	479.00
Polished	99-13	Silverado/Sierra 1500 Crew Cab		Y	51 lbs.	460713	461.00
Polished	15-17	Silverado/Sierra 2500HD/3500 Crew Cab		Y	51 lbs.	461413	479.00
Polished	01-14	Silverado/Sierra 2500HD/3500 Crew Cab		Y	51 lbs.	460713	461.00
Polished	15-17	Colorado/Canyon Extended Cab		Y	41 lbs.	461510	486.00
Polished	15-17	Colorado/Canyon Crew Cab		Y	45 lbs.	461515	500.00
Polished	04-14	Colorado/Canyon Crew Cab		Y	45 lbs.	460413	457.00
Polished	02-13	Chevrolet Avalanche 1500		Y	54 lbs.	460014	470.00
Polished	15-17	Suburban/Yukon XL 1500		Y	44 lbs.	461514	476.00
Polished	00-14	Suburban/Yukon XL 1500 (Excludes Z-71 Package)		Y	54 lbs.	460014	470.00
Polished	15-17	Tahoe/Yukon		Y	42 lbs.	461516	454.00
Polished	00-14	Tahoe/Yukon (Excludes Z-71 Package)		Y	49 lbs.	460016	447.00
Black	14-17	Silverado/Sierra 1500 Regular Cab		Y	36 lbs.	451411	243.00
Black	99-13	Silverado/Sierra 1500 Regular Cab		Y	36 lbs.	450711	231.00
Black	15-17	Silverado/Sierra 2500HD/3500 Regular Cab		Y	36 lbs.	451411	243.00
Black	01-14	Silverado/Sierra 2500HD/3500 Regular Cab		Y	36 lbs.	450711	231.00
Black	14-17	Silverado/Sierra 1500 Double Cab		Y	53 lbs.	451412	256.00
Black	99-13	Silverado/Sierra 1500 Extended Cab		Y	53 lbs.	450712	256.00
Black	15-17	Silverado/Sierra 2500HD/3500 Double Cab		Y	53 lbs.	451412	256.00
Black	15-17	Silverado/Sierra 2500HD/3500 Double Cab		Y	53 lbs.	451512	264.00
Black	01-14	Silverado/Sierra 2500HD/3500 Extended Cab		Y	53 lbs.	450712	256.00
Black	14-17	Silverado/Sierra 1500 Crew Cab		Y	51 lbs.	451413	280.00
Black	99-13	Silverado/Sierra 1500 Crew Cab		Y	51 lbs.	450713	273.00
Black	15-17	Silverado/Sierra 2500HD/3500 Crew Cab		Y	51 lbs.	451413	280.00
Black	01-14	Silverado/Sierra 2500HD/3500 Crew Cab		Y	51 lbs.	450713	273.00
Black	15-17	Colorado/Canyon Extended Cab		Y	41 lbs.	451510	300.00
Black	15-17	Colorado/Canyon Crew Cab		Y	45 lbs.	451515	300.00
Black	04-14	Colorado/Canyon Crew Cab		Y	45 lbs.	450413	286.00
Black	09-17	**WSL** Chevrolet Traverse (60° Series Nerf Bar)		Y	43 lbs.	450764	350.00
Black	08-17	**WSL** Buick Enclave (60° Series Nerf Bar)		Y	43 lbs.	450764	350.00
Black	02-13	Chevrolet Avalanche 1500		Y	54 lbs.	450014	267.00
Black	15-17	Suburban/Yukon XL 1500		Y	44 lbs.	451514	273.00
Black	00-14	Suburban/Yukon XL 1500 (Excludes Z-71 Package)		Y	54 lbs.	450014	267.00
Black	15-17	Tahoe/Yukon		Y	42 lbs.	451516	267.00
Black	00-14	Tahoe/Yukon (Excludes Z-71 Package)		Y	49 lbs.	450016	261.00
		SATURN					
Polished	08-09	**WSL** Saturn VUE		Y	54 lbs.	460864	536.00
Black	07-10	**WSL** Saturn Outlook (60° Series Nerf Bar)		Y	43 lbs.	450764	350.00
		DODGE/RAM					
Polished	09-17	Ram Regular Cab 1500		Y	41 lbs.	461431	420.00
Polished	10-17	Ram Regular Cab 2500, 3500		Y	41 lbs.	461431	420.00
Polished	11-17	Ram Regular Cab 3500, 4500, 5500 Chassis Cab - Requires Kit $551495 N/C		Y	41 lbs.	461431	420.00
Polished	09-17	Ram Quad Cab 1500		Y	50 lbs.	461432	476.00
Polished	09-13	**WSL** Ram Quad Cab 1500		Y	50 lbs.	460932	457.00
Polished	02-08	**WSL** Ram Quad Cab 1500 (Excludes SRT-10 & Rumble Bee)		Y	55 lbs.	550320	481.00
Polished	03-09	**WSL** Ram Quad Cab 2500, 3500		Y	55 lbs.	550320	481.00
Polished	95-01	**WSL** Ram Club/Quad Cab 1500, 2500, 3500		Y	55 lbs.	549025	514.00
Polished	95-02	**WSL** Ram Club/Quad Cab 2500, 3500		Y	54 lbs.	549025	514.00
Polished	09-17	Ram Crew Cab 1500		Y	52 lbs.	461433	504.00
Polished	11-17	Ram Crew Cab 3500/4500/5500 Chassis Cab - Requires Kit #551495 N/C		Y	52 lbs.	461433	504.00
Polished	08-10	**WSL** Ram/Sterling Quad Cab 3500/4500/5500 Chassis Cab (Requires Kit #551450 N/C)		Y	55 lbs.	550320	481.00
Polished	09-13	**WSL** Ram Crew Cab 1500 (Also 11-13 Ram 3500/4500/5500 Chassis Cab - Kit #551495 N/C)		Y	52 lbs.	460933	486.00
Polished	10-17	Ram Crew Cab 2500, 3500		Y	59 lbs.	461033	507.00
Polished	10-17	Ram Mega Cab 2500, 3500		Y	60 lbs.	461035	544.00
Polished	05-11	**WSL** Dakota Club Cab		Y	44 lbs.	460532	464.00
Polished	05-11	**WSL** Dakota Quad Cab - 4-door		Y	49 lbs.	460533	464.00

Polished	04-09	**WSL** Durango		Y	49 lbs.	460434	479.00
Polished	07-09	**WSL** Chrysler Aspen		Y	49 lbs.	460434	479.00

Finish	Year	Description		FDX	Weight	Item #	Retail
		3" NERF BARS					
		DODGE/RAM					
Black	09-17	Ram Regular Cab 1500		Y	41 lbs.	451431	264.00
Black	10-17	Ram Regular Cab 2500, 3500 (Also fits Ram 3500/4500/5500 Chassis Cab - Requires Kit #551495 N/C)		Y	41 lbs.	451431	264.00
Black	09-17	Ram Quad Cab 1500			50 lbs.	451432	286.00
Black	02-08	**WSL** Ram Quad Cab 1500 (Excludes SRT-10 & Rumble Bee)		Y	55 lbs.	550330	311.00
Black	03-09	**WSL** Ram Quad Cab 2500, 3500		Y	55 lbs.	550330	311.00
Black	95-01	**WSL** Ram Club/Quad Cab 1500, 2500, 3500		Y	54 lbs.	548190	357.00
Black	95-02	**WSL** Ram Club/Quad Cab 2500, 3500		Y	54 lbs.	548190	357.00
Black	09-17	Ram Crew Cab 1500		Y	53 lbs.	451433	314.00
Black	11-17	Ram Crew Cab 3500/4500/5500 Chassis Cab - Requires Kit #551495 N/C		Y	53 lbs.	451433	314.00
Black	08-10	**WSL** Ram/Sterling Quad Cab 3500/4500/5500 Chassis Cab (Requires Kit #551450 N/C)		Y	55 lbs.	550330	311.00
Black	09-13	**WSL** Ram Crew Cab 1500 (Also 11-13 Ram 3500/4500/5500 Chassis Cab - Kit #551495 N/C)		Y	52 lbs.	450933	307.00
Black	10-17	Ram Crew Cab 2500, 3500		Y	59 lbs.	451033	317.00
Black	10-17	Ram Mega Cab 2500, 3500		Y	60 lbs.	451035	333.00
Black	05-11	**WSL** Dakota Quad Cab - 4-door		Y	49 lbs.	450533	279.00
Black	04-09	**WSL** Durango		Y	49 lbs.	450434	300.00
Black	07-09	**WSL** Chrysler Aspen		Y	49 lbs.	450434	300.00
		FORD					
Polished	15-17	F-150 Regular Cab		Y	46 lbs.	461521	447.00
Polished	04-14	F-150 Regular Cab		Y	51 lbs.	460921	446.00
Polished	04-08	**WSL** F-150 Regular Cab		Y	59 lbs.	460421	443.00
Polished	15-17	F-150 Super Cab		Y	59 lbs.	461522	514.00
Polished	04-14	F-150 Super Cab		Y	60 lbs.	460922	514.00
Polished	98-04	**WSL** F-150 Super Cab (Heritage Body Style)		Y	64 lbs.	549155	544.00
Polished	15-17	F-150 Super Crew		Y	60 lbs.	461523	537.00
Polished	09-14	F-150 Super Crew		Y	63 lbs.	460923	537.00
Polished	04-08	**WSL** F-150 Super Crew		Y	69 lbs.	460423	529.00
Polished	05-08	**WSL** Lincoln Mark LT Super Crew		Y	69 lbs.	460423	529.00
Polished	2017	F-Series Super Duty Regular Cab		Y	46 lbs.	461521	447.00
Polished	99-16	F-Series Super Duty Regular Cab		Y	49 lbs.	548850	436.00
Polished	2017	F-Series Super Duty Super Cab		Y	59 lbs.	461522	514.00
Polished	99-16	F-Series Super Duty Super Cab		Y	59 lbs.	548875	486.00
Polished	2017	F-Series Super Duty Crew Cab		Y	60 lbs.	461523	537.00
Polished	99-16	F-Series Super Duty Crew Cab		Y	65 lbs.	548900	543.00
Black	15-17	F-150 Regular Cab		Y	46 lbs.	451521	286.00
Black	04-14	F-150 Regular Cab		Y	54 lbs.	450921	309.00
Black	15-17	F-150 Super Cab		Y	59 lbs.	451522	337.00
Black	04-14	F-150 Super Cab		Y	60 lbs.	450922	337.00
Black	15-17	F-150 Super Crew		Y	60 lbs.	451523	346.00
Black	09-14	F-150 Super Crew		Y	63 lbs.	450923	346.00
Black	04-08	**WSL** F-150 Super Crew		Y	69 lbs.	450423	343.00
Black	05-08	**WSL** Lincoln Mark LT Super Crew		Y	69 lbs.	450423	343.00
Black	2017	F-Series Super Duty Regular Cab		Y	46 lbs.	451521	286.00
Black	99-16	F-Series Super Duty Regular Cab		Y	48 lbs.	548865	299.00
Black	2017	F-Series Super Duty Super Cab		Y	59 lbs.	451522	337.00
Black	99-16	F-Series Super Duty Super Cab		Y	59 lbs.	548890	324.00
Black	2017	F-Series Super Duty Crew Cab		Y	60 lbs.	451523	346.00
Black	99-16	F-Series Super Duty Crew Cab		Y	65 lbs.	548915	327.00
		TOYOTA					
Polished	07-17	Tundra Regular Cab (60° Series Nerf Bar)		Y	35 lbs.	460751	467.00
Polished	07-17	Tundra Double Cab (60° Series Nerf Bar)		Y	40 lbs.	460752	476.00
Polished	07-17	Tundra CrewMax (60° Series Nerf Bar)		Y	46 lbs.	460753	514.00
Polished	05-17	Tacoma Access Cab		Y	42 lbs.	461652	496.00
Polished	05-15	**WSL** Tacoma Access Cab		Y	42 lbs.	460552	480.00
Polished	05-17	Tacoma Double Cab		Y	49 lbs.	461653	514.00
Polished	05-15	**WSL** Tacoma Double Cab		Y	49 lbs.	460553	500.00
Black	07-17	Tundra Regular Cab (60° Series Nerf Bar)		Y	35 lbs.	450751	310.00
Black	07-17	Tundra Double Cab (60° Series Nerf Bar)		Y	40 lbs.	450752	319.00
Black	07-17	Tundra CrewMax (60° Series Nerf Bar)		Y	46 lbs.	450753	323.00
Black	05-17	Tacoma Access Cab		Y	42 lbs.	451652	324.00
Black	05-17	Tacoma Double Cab		Y	49 lbs.	451653	339.00
Black	05-15	**WSL** Tacoma Double Cab		Y	49 lbs.	450553	330.00
		NISSAN					
Polished	04-15	**WSL** Titan King Cab		Y	58 lbs.	460462	427.00
Polished	04-15	**WSL** Titan Crew Cab		Y	54 lbs.	460463	456.00

Black	04-15	**WSL** Titan King Cab		Y	52 lbs.	450462	271.00

Finish	Year	Description		FDX	Weight	Item #	Retail
		3" NERF BARS - WHEEL-TO-WHEEL					
		CHEVROLET/GMC					
Polished	14-17	Silverado/Sierra 1500 Crew Cab Short Box (5.8 ft. Box)		Y	63 lbs.	461418	700.00
Polished	99-13	Silverado/Sierra Crew Cab Short Box (5.8 ft. Box)		Y	63 lbs.	460718	686.00
Polished	14-17	Silverado/Sierra 1500 Crew Cab Standard Box (6.5 ft. Box)		N	70 lbs.	461419	700.00
Polished	15-17	Silverado/Sierra 2500HD/3500 Double Cab Standard Box (6.5 ft. Box)		N	57 lbs.	461517	710.00
Polished	15-17	Silverado/Sierra 2500HD/3500 Crew Cab Standard Box (6.5 ft. Box)		N	70 lbs.	461419	700.00
Polished	01-17	Silverado/Sierra 2500HD/3500 Crew Cab Standard Box (6.5 ft. Box) (Without Factory Flaps)		N	66 lbs.	460719	686.00
Polished	01-17	Silverado/Sierra Crew Cab Dual Wheel (8 ft. Box) (Nerf Bar terminates under wheel flare) (W/O Factory Fla		N	66 lbs.	460719	686.00
Polished	14-17	Silverado/Sierra 1500 Double Cab Standard Box (6.5 ft. Box)		N	56 lbs.	461417	703.00
Polished	01-14	Silverado/Sierra 2500HD/3500 Extended Cab Standard Box (6.5 ft. Box)		N	64 lbs.	460717	703.00
Polished	99-13	Silverado/Sierra 1500 Extended Cab Standard Box (6.5 ft. Box)		N	64 lbs.	460717	703.00
Polished	01-14	Silverado/Sierra Extended Cab Dual Wheel (8 ft. Box) (Nerf Bar terminates under wheel flare)		N	64 lbs.	460717	703.00
Black	14-17	Silverado/Sierra 1500 Crew Cab Standard Box (6.5 ft. Box)		N	70 lbs.	451419	467.00
Black	15-17	Silverado/Sierra 2500HD/3500 Double Cab Standard Box (6.5 ft. Box)		N	57 lbs.	451517	464.00
Black	15-17	Silverado/Sierra 2500HD/3500 Crew Cab Standard Box (6.5 ft. Box)		N	70 lbs.	451419	467.00
Black	01-17	Silverado/Sierra 2500HD/3500 Crew Cab Standard Box (6.5 ft. Box) (Without Factory Flaps)		N	66 lbs.	450719	460.00
Black	01-17	Silverado/Sierra Crew Cab Dual Wheel (8 ft. Box) (Nerf Bar terminates under wheel flare) (W/O Factory Fla		N	66 lbs.	450719	460.00
Black	14-17	Silverado/Sierra 1500 Double Cab Standard Box (6.5 ft. Box)		N	56 lbs.	451417	461.00
Black	01-14	Silverado/Sierra 2500HD/3500 Extended Cab Standard Box (6.5 ft. Box)		N	64 lbs.	450717	461.00
Black	99-13	Silverado/Sierra 1500 Extended Cab Standard Box (6.5 ft. Box)		N	64 lbs.	450717	461.00
Black	01-14	Silverado/Sierra Extended Cab Dual Wheel (8 ft. Box) (Nerf Bar terminates under wheel flare)		N	64 lbs.	450717	461.00
		DODGE/RAM					
Polished	09-17	Ram 1500 Quad Cab (6.4 ft. Box)		Y	62 lbs.	461437	664.00
Polished	09-13	**WSL** Ram 1500 Quad Cab Short Box		Y	68 lbs.	460937	646.00
Polished	02-08	**WSL** Ram 1500 Quad Cab Short Box		Y	65 lbs.	551150	679.00
Polished	03-09	**WSL** Ram 2500, 3500 Quad Cab Short Box		Y	65 lbs.	551150	679.00
Polished	09-17	Ram Crew Cab 1500 (5.7 ft. Box)		N	61 lbs.	461439	686.00
Polished	09-13	**WSL** Ram Crew Cab 1500 Short Box		N	60 lbs.	460939	666.00
Polished	10-17	Ram Crew Cab 2500, 3500 (6.4 ft. Box)		N	62 lbs.	461039	764.00
Polished	10-17	Ram Mega Cab 2500, 3500 (6.4 ft. Box)		N	66 lbs.	461037	764.00
Polished	03-09	**WSL** Ram Quad Cab 3500 Dual Wheel Long Box (Nerf Bar terminates under wheel flare)		N	66 lbs.	551150	679.00
Polished	10-17	Ram Crew Cab 3500 Dual Wheel Long Box (Nerf Bar terminates under wheel flare)		N	71 lbs.	461039	764.00
Black	09-13	**WSL** Ram 1500 Quad Cab Short Box		N	68 lbs.	450937	444.00
Black	09-13	**WSL** Ram Crew Cab 1500 Short Box		N	60 lbs.	450939	463.00
		FORD					
Polished	04-14	F-150 Super Cab (6.5 ft. Box)		Y	82 lbs.	460927	789.00
Polished	04-08	**WSL** F-150 Super Crew (5.5 ft. Box)		N	74 lbs.	460429	736.00
Polished	05-08	**WSL** Lincoln Mark LT Super Crew (5.5 ft. Box)		N	74 lbs.	460429	736.00
Polished	99-16	F-Series Super Duty Super Cab Short Box Models		Y	70 lbs.	551190	693.00
Polished	99-16	F-Series Super Duty Crew Cab Short Box Models		N	75 lbs.	469929	743.00
Polished	99-16	Super Duty F-350, F-450 Crew Cab Dual Wheel Long Box (Nerf Bar terminates under wheel flare)		N	75 lbs.	469929	743.00
		TUBE STEP EXTENSION KIT					
		1" Extension for Use with 4" Oval Nerf Bar and 3" Round Nerf Bar Applications		Y	4 lbs.	590250	50.00
		This product allows the step to be moved out from the side of the vehicle one inch. This increases the toe room					
		on the step. This will fit on all Nerf Bars that mount into the end of the tube. Excludes Cradle Mount Nerf Bars.					
		3" NERF BAR STEP PAD KIT					
	ALL	3" Nerf Bar Step Pad Package (2 per Kit)		Y	2 lbs.	460002	11.00

Finish	Year	Description		FDX	Weight	Item #	Retail
		4" OVAL NERF BARS - CAB LENGTH					
		CHEVROLET/GMC					
Polished	14-17	**WSL** Silverado/Sierra 1500 Regular Cab		Y	34 lbs.	441411	400.00
Polished	99-13	**WSL** Silverado/Sierra 1500 Regular Cab		Y	34 lbs.	440711	400.00
Polished	01-14	**WSL** Silverado/Sierra 2500HD/3500 Regular Cab		Y	34 lbs.	440711	400.00
Polished	14-17	**WSL** Silverado/Sierra 1500 Double Cab		Y	50 lbs.	441412	486.00
Polished	99-13	**WSL** Silverado/Sierra 1500 Extended Cab		Y	51 lbs.	440712	486.00
Polished	15-17	**WSL** Silverado/Sierra 2500HD/3500 Double Cab		Y	50 lbs.	441412	486.00
Polished	01-14	**WSL** Silverado/Sierra 2500HD/3500 Extended Cab		Y	51 lbs.	440712	486.00
Polished	14-17	**WSL** Silverado/Sierra 1500 Crew Cab		Y	51 lbs.	441413	507.00
Polished	99-13	**WSL** Silverado/Sierra 1500 Crew Cab		Y	51 lbs.	440713	500.00
Polished	15-17	**WSL** Silverado/Sierra 2500HD/3500 Crew Cab		Y	51 lbs.	441413	507.00
Polished	01-14	**WSL** Silverado/Sierra 2500HD/3500 Crew Cab		Y	51 lbs.	440713	500.00
		DODGE/RAM					
Polished	09-17	**WSL** Ram Quad Cab 1500		Y	55 lbs.	441432	543.00
Polished	02-08	**WSL** Ram Quad Cab 1500		Y	55 lbs.	440232	543.00
Polished	03-09	**WSL** Ram Quad Cab 2500, 3500		Y	55 lbs.	440232	543.00
Polished	09-17	**WSL** Ram Crew Cab 1500		Y	52 lbs.	441433	543.00
Polished	10-17	**WSL** Ram Crew Cab 2500, 3500		Y	53 lbs.	441033	557.00
Polished	10-17	**WSL** Ram Mega Cab 2500, 3500		Y	63 lbs.	441035	564.00
		FORD					
Polished	15-17	**WSL** F-150 Super Cab		Y	60 Lbs.	441522	521.00
Polished	04-14	**WSL** F-150 Super Cab		Y	60 lbs.	440922	571.00
Polished	04-08	**WSL** F-150 Super Cab		Y	66 lbs.	440422	571.00
Polished	15-17	**WSL** F-150 Super Crew		Y	65 lbs.	441523	571.00
Polished	09-14	**WSL** F-150 Super Crew		Y	63 lbs.	440923	571.00
Polished	04-08	**WSL** F-150 Super Crew		Y	69 lbs.	440423	564.00
Polished	99-16	**WSL** F-Series Super Duty Crew Cab		Y	65 lbs.	449923	564.00
		4" OVAL NERF BARS - WHEEL-TO-WHEEL					
Polished	14-17	**WSL** Silverado/Sierra 1500 Crew Cab Standard Box (6.5 ft. Box)		N	65 lbs.	441419	650.00
Polished	99-13	**WSL** Silverado/Sierra 1500 Crew Cab Standard Box (6.5 ft. Box) (Without Factory Flaps)		N	65 lbs.	440719	650.00
Polished	01-14	**WSL** Silverado/Sierra 2500HD/3500 Crew Cab Standard Box (6.5 ft. Box) (Also fits Dual Wheel 8 ft. Box)		N	65 lbs.	440719	650.00
		6" OVAL STEPS - CAB LENGTH					
		CHEVROLET/GMC					
Polished	14-17	Silverado/Sierra 1500 Double Cab		Y	59 lbs.	240712	571.00
Polished	07-13	Silverado/Sierra 1500 Extended Cab		Y	59 lbs.	240712	571.00
Polished	15-17	Silverado/Sierra 2500HD/3500 Double Cab (Gas or Diesel)		Y	59 lbs.	240712	571.00
Polished	07-14	Silverado/Sierra 2500HD/3500 Extended Cab (Gas or Diesel)		Y	59 lbs.	240712	571.00
Polished	07-17	Silverado/Sierra 1500 Crew Cab		Y	62 lbs.	240713	597.00
Polished	07-17	Silverado/Sierra 2500HD/3500 Crew Cab (Gas or Diesel)		Y	62 lbs.	240713	597.00
Black	14-17	Silverado/Sierra 1500 Double Cab		Y	64 lbs.	240712B	350.00
Black	07-13	Silverado/Sierra 1500 Extended Cab		Y	64 lbs.	240712B	350.00
Black	15-17	Silverado/Sierra 2500HD/3500 Double Cab (Gas or Diesel)		Y	64 lbs.	240712B	350.00
Black	07-14	Silverado/Sierra 2500HD/3500 Extended Cab (Gas or Diesel)		Y	64 lbs.	240712B	350.00
Black	07-17	Silverado/Sierra 1500 Crew Cab		Y	68 lbs.	240713B	371.00
Black	07-17	Silverado/Sierra 2500HD/3500 Crew Cab (Gas or Diesel)		Y	68 lbs.	240713B	371.00
		RAM					
Polished	09-17	Ram 1500 Quad Cab (Gas or Diesel)		Y	66 lbs.	241532	587.00
Polished	09-15	Ram 1500 Quad Cab (Gas or Diesel) (Excludes Ram with manufacturing date of June 2015+)		Y	66 lbs.	240932	587.00
Polished	10-15	Ram 2500, 3500 Quad Cab (Gas or Diesel) (Excludes Ram with manufacturing date of June 2015+)		Y	66 lbs.	240932	587.00
Polished	09-17	Ram 1500 Crew Cab (Gas or Diesel)		Y	71 lbs.	241533	607.00
Polished	09-15	Ram 1500 Crew Cab (Gas or Diesel) (Excludes Ram with manufacturing date of June 2015+)		Y	71 lbs.	240933	607.00
Polished	10-17	Ram 2500, 3500 Crew Cab (Gas or Diesel) (Excludes 3500/4500/5500 Chassis Cab Diesel)		Y	71 lbs.	241533	607.00
Polished	10-15	Ram 2500, 3500 Crew Cab (Gas or Diesel) (Excl Ram w/mfg date 2015+) (Excl Chassis Cab Diesel)		Y	71 lbs.	240933	607.00
Polished	10-17	Ram 2500, 3500 Mega Cab (Gas or Diesel)		Y	75 lbs.	241535	679.00
Polished	10-15	Ram 2500, 3500 Mega Cab (Gas or Diesel) (Excludes Ram with manufacturing date of June 2015+)		Y	75 lbs.	241035	679.00
Black	15-17	Ram 1500 Quad Cab (Gas or Diesel)		Y	70 lbs.	241532B	371.00
Black	09-15	Ram 1500 Quad Cab (Gas or Diesel) (Excludes Ram with manufacturing date of June 2015+)		Y	70 lbs.	240932B	371.00
Black	10-15	Ram 2500, 3500 Quad Cab (Gas or Diesel) (Excludes Ram with manufacturing date of June 2015+)		Y	70 lbs.	240932B	371.00
Black	15-17	Ram 1500 Crew Cab (Gas or Diesel)		Y	74 lbs.	241533B	393.00
Black	09-15	Ram 1500 Crew Cab (Gas or Diesel) (Excludes Ram with manufacturing date of June 2015+)		Y	74 lbs.	240933B	393.00
Black	15-17	Ram 2500, 3500 Crew Cab (Gas or Diesel)		Y	74 lbs.	241533B	393.00
Black	10-15	Ram 2500, 3500 Crew Cab (Gas or Diesel) (Excludes Ram with manufacturing date of June 2015+)		Y	74 lbs.	240933B	393.00

Black	15-17	Ram 2500, 3500 Mega Cab (Gas or Diesel)		Y	79 lbs.	241535B	414.00
Black	10-15	Ram 2500, 3500 Mega Cab (Gas or Diesel) (Excludes Ram with manufacturing date of June 2015+)		Y	79 lbs.	241035B	414.00

Finish	Year	Description		FDX	Weight	Item #	Retail
		6" OVAL STEPS - CAB LENGTH					
		FORD					
Polished	15-17	F-150 Super Cab		Y	60 lbs.	241522	569.00
Polished	09-14	F-150 Super Cab		Y	60 lbs.	240922	569.00
Polished	15-17	F-150 Super Crew		Y	71 lbs.	241523	627.00
Polished	09-14	F-150 Super Crew		Y	71 lbs.	240923	627.00
Polished	2017	F-250/F-350/F-450 Super Cab (Gas or Diesel)		Y	60 lbs.	241522	569.00
Polished	99-16	F-250/F-350/F-450 Super Cab (Gas or Diesel)		Y	60 lbs.	249922	561.00
Polished	2017	F-250/F-350/F-450 Crew Cab (Gas or Diesel)		Y	71 lbs.	241523	627.00
Polished	99-16	F-250/F-350/F-450 Crew Cab (Gas or Diesel)		Y	68 lbs.	249923	641.00
Black	15-17	F-150 Super Cab		Y	65 lbs.	241522B	350.00
Black	15-17	F-150 Super Crew		Y	79 lbs.	241523B	407.00
Black	2017	F-250/F-350/F-450 Super Cab (Gas or Diesel)		Y	65 lbs.	241522B	350.00
Black	99-16	F-250/F-350/F-450 Super Cab (Gas or Diesel)		Y	64 lbs.	249922B	350.00
Black	2017	F-250/F-350/F-450 Crew Cab (Gas or Diesel)		Y	79 lbs.	241523B	407.00
Black	99-16	F-250/F-350/F-450 Crew Cab (Gas or Diesel)		Y	73 lbs.	249923B	407.00
		EZ STEP					
		CHEVROLET/GMC					
	07-14	**WSL** Chevrolet Silverado/GMC Sierra 1500 (5.8 and 6.5 ft. Box) (Also fits 07-10 HD Models)		Y	22 lbs.	290711	197.00
	07-14	**WSL** Chevrolet Silverado/GMC Sierra 1500 (8 ft. Box) (Also fits 07-10 HD Models)		Y	25 lbs.	290713	197.00
	11-14	**WSL** Chevrolet Silverado/GMC Sierra 2500HD/3500 (6.5 ft. Box) (2015 Requires Drilling)		Y	23 lbs.	291112	197.00
		DODGE					
	09-17	**WSL** Dodge Ram 1500 (5.6, 6.4 and 8 ft. Box) (w/o Dual Exhaust)		Y	28 lbs.	290931	197.00
	10-12	**WSL** Dodge Ram 2500, 3500 (6.4 and 8 ft. Box)		Y	25 lbs.	291032	197.00
		FORD					
	08-16	**WSL** Ford Super Duty (6.5 and 8 ft. Box) (Works with Factory Receiver Hitch ONLY)		Y	24 lbs.	290822	197.00
		TOYOTA					
	07-13	**WSL** Tundra (5.6, 6.6 and 8 ft. Box)		Y	20 lbs.	290751	197.00
		ALUMINUM OVAL BED RAILS					
		CHEVROLET/GMC	**LENGTH**				
Black	99-17	**WSL** Silverado/Sierra 1500 (14-17 Requires Accessory Kit #510095 - $15.00)	5.8'	Y	17 lbs.	516070	260.00
Black	99-17	**WSL** Silverado/Sierra 1500 (14-17 Requires Accessory Kit #510095 - $15.00)	6.6'	Y	19 lbs.	516080	277.00
Black	99-17	**WSL** Silverado/Sierra 1500 (14-17 Requires Accessory Kit #510095 - $15.00)	8'	Y	23 lbs.	516100	346.00
Black	01-17	**WSL** Silverado/Sierra 2500/3500 (15-17 Requires Accessory Kit #510095 - $15.00)	6.6'	Y	19 lbs.	516080	277.00
Black	01-17	**WSL** Silverado/Sierra 2500/3500 (Incl. Dually) (15-17 Req. Accessory Kit #510095 - $15.00)	8'	Y	23 lbs.	516100	346.00
Black	15-17	**WSL** ColoradoCanyon Short Box (Req. Kit #510095 - $15.00) (Requires Tube Length Modificat	5.8'	Y	17 lbs.	516070	260.00
Black	15-17	**WSL** ColoradoCanyon Long Box (Req. Kit #510095 - $15.00) (Requires Tube Length Modificati	6.6'	Y	19 lbs.	516080	277.00
Chrome	99-17	**WSL** Silverado/Sierra 1500 (14-17 Requires Accessory Kit #510095 - $15.00)	5.8'	Y	17 lbs.	518070	407.00
Chrome	99-17	**WSL** Silverado/Sierra 1500 (14-17 Requires Accessory Kit #510095 - $15.00)	6.6'	Y	19 lbs.	518080	436.00
Chrome	99-17	**WSL** Silvera/Sierra 1500 (14-17 Requires Accessory Kit #510095 - $15.00)	8'	Y	23 lbs.	518100	514.00
Chrome	01-17	**WSL** Silverado/Sierra 2500/3500 (15-17 Requires Accessory Kit #510095 - $15.00)	6.6'	Y	19 lbs.	518080	436.00
Chrome	01-17	**WSL** Silverado/Sierra 2500/3500 (Incl. Dually) (15-17 Req. Accessory Kit #510095 - $15.00)	8'	Y	23 lbs.	518100	514.00
Chrome	15-17	**WSL** Colorado/Canyon Short Box (Req. Kit #510095 - $15.00) (Requires Tube Length Modifica	5.8'	Y	17 lbs.	518070	407.00
Chrome	15-17	**WSL** Colorado/Canyon Long Box (Req. Kit #510095 - $15.00) (Requires Tube Length Modificat	6.6'	Y	19 lbs.	518080	436.00
		DODGE/RAM					
Black	09-17	**WSL** Ram 1500 (May Require Cutting the Plastic Bed Caps)	5.6'	Y	17 lbs.	516070	260.00
Black	02-17	**WSL** Ram 1500 (May Require Cutting the Plastic Bed Caps)	6.4'	Y	19 lbs.	516080	277.00
Black	02-17	**WSL** Ram 1500 (May Require Cutting the Plastic Bed Caps)	8'	Y	23 lbs.	516100	346.00
Black	03-17	**WSL** Ram 2500, 3500 (May Require Cutting the Plastic Bed Caps)	6.4'	Y	19 lbs.	516080	277.00
Black	03-17	**WSL** Ram 2500, 3500 (Incl. Dually) (May Require Cutting the Plastic Bed Caps)	8'	Y	23 lbs.	516100	346.00
Chrome	09-17	**WSL** Ram 1500 (May Require Cutting the Plastic Bed Caps)	5.6'	Y	17 lbs.	518070	407.00
Chrome	02-17	**WSL** Ram 1500 (May Require Cutting the Plastic Bed Caps)	6.4'	Y	19 lbs.	518080	436.00
Chrome	02-17	**WSL** Ram 1500 (May Require Cutting the Plastic Bed Caps)	8'	Y	23 lbs.	518100	514.00
Chrome	03-17	**WSL** Ram 2500, 3500 (May Require Cutting the Plastic Bed Caps)	6.4'	Y	19 lbs.	518080	436.00
Chrome	03-17	**WSL** Ram 2500, 3500 (Incl. Dually) (May Require Cutting the Plastic Bed Caps)	8'	Y	23 lbs.	518100	514.00

Finish	Year	Description		FDX	Weight	Item #	Retail
		ALUMINUM OVAL BED RAILS					
		FORD	**LENGTH**				
Black	04-14	**WSL** F-150 (May Require Cutting the Plastic Bed Caps)	5.5’	Y	17 lbs.	516070	260.00
Black	97-14	**WSL** F-150	6.5’	Y	19 lbs.	516080	277.00
Black	97-14	**WSL** F-150	8’	Y	23 lbs.	516100	346.00
Black	99-17	**WSL** F-Series Super Duty	6.5’	Y	19 lbs.	516080	277.00
Black	99-17	**WSL** F-Series Super Duty (Includes Dually)	8’	Y	23 lbs.	516100	346.00
Chrome	04-14	**WSL** F-150 (May Require Cutting the Plastic Bed Caps)	5.5’	Y	17 lbs.	518070	407.00
Chrome	97-14	**WSL** F-150	6.5’	Y	19 lbs.	518080	436.00
Chrome	97-14	**WSL** F-150	8’	Y	23 lbs.	518100	514.00
Chrome	99-17	**WSL** F-Series Super Duty	6.5’	Y	19 lbs.	518080	436.00
Chrome	99-17	**WSL** F-Series Super Duty (Includes Dually)	8’	Y	23 lbs.	518100	514.00
		TOYOTA					
Black	07-17	**WSL** Tundra	5.6’	Y	17 lbs.	516070	260.00
Black	07-17	**WSL** Tundra	6.6’	Y	19 lbs.	516080	277.00
Black	07-17	**WSL** Tundra	8’	Y	23 lbs.	516100	346.00
Chrome	07-17	**WSL** Tundra	5.6’	Y	17 lbs.	518070	407.00
Chrome	07-17	**WSL** Tundra	6.6’	Y	19 lbs.	518080	436.00
Chrome	07-17	**WSL** Tundra	8’	Y	23 lbs.	518100	514.00
		NISSAN					
Black	04-12	**WSL** Titan (May Require Cutting the Plastic Bed Caps)	5.6’	Y	17 lbs.	516070	260.00
Black	04-12	**WSL** Titan (May Require Cutting the Plastic Bed Caps)	6.6’	Y	19 lbs.	516080	277.00
Chrome	04-12	**WSL** Titan (May Require Cutting the Plastic Bed Caps)	5.6’	Y	17 lbs.	518070	407.00
Chrome	04-12	**WSL** Titan (May Require Cutting the Plastic Bed Caps)	6.6’	Y	19 lbs.	518080	436.00
		TUBULAR BED RAILS					
SST	07-17	**WSL** Chevrolet Silverado/GMC Sierra 1500 - 5.8 ft. Box Only (14-17 Req. Kit #510095 - $15.00	58”	Y	15 lbs.	510080	329.00
SST	07-17	**WSL** Chevrolet Silverado/GMC Sierra 1500 - 6.5 ft. Box Only (14-17 Req. Kit #510095 - $15.00	67.5”	Y	17 lbs.	510090	344.00
SST	07-17	**WSL** Chevrolet Silverado/GMC Sierra 2500HD/3500 - 6.5 ft. Box Only (15+ Req. #510095 - $15	67.5”	Y	17 lbs.	510090	344.00
SST	99-07	**WSL** Chevrolet Silverado/GMC Sierra - 6.5 ft. Box Only (Classic Body Style)	69.5”	Y	17 lbs.	510020	363.00
SST	15-17	**WSL** Chevrolet Colorado/GMC Canyon Extended/Crew Cab Long Box (Req. Kit #510095 - $15	61.5”	Y	19 lbs.	510100	343.00
SST	09-17	**WSL** Dodge Ram 1500 - 5.7 ft. Box Only (Will Require Cutting the Plastic Bed Caps)	61.5”	Y	19 lbs.	510100	343.00
SST	02-17	**WSL** Dodge Ram 1500 - Short Box Only (Will Require Cutting the Plastic Bed Caps)	69.5”	Y	17 lbs.	510020	363.00
SST	03-17	**WSL** Dodge Ram 2500, 3500 - Short Box Only (Will Require Cutting the Plastic Bed Caps)	69.5”	Y	17 lbs.	510020	363.00
SST	09-17	**WSL** Ford F-150 - 5.5 ft. Box Only (Will Require Cutting the Plastic Bed Caps)	61.5”	Y	19 lbs.	510100	343.00
SST	ALL	**WSL** Clamp-On for Domestic Full-Size Long Box Pickups (Excludes Sportside)	N/A	Y	23 lbs.	510009	379.00
		RECEIVER HITCH STEP STINGER					
	ALL	2” Square Receiver Stinger for Use with MegaStep and O-MegaStep Hitch Steps		Y	4 lbs.	570000	57.00
	ALL	2” Square Receiver Stinger for Use with Grip Step Hitch Step		Y	6 lbs.	570010	76.00
	ALL	2” Square Receiver Stinger with 6" Drop for Use with Grip Step Hitch Step		Y	8 lbs.	570015	107.00
		RECEIVER HITCH STEPS FOR USE WITH ABOVE STINGERS (Weight Capacity 300 lbs.)					
		26” MegaStep	26 in.	Y	3 lbs.	575226	107.00
Silver		26” Silver O-Mega II 6" Oval Step	26 in.	Y	6 lbs.	583026	79.00
Black		26” Black O-Mega II 6" Oval Step	26 in.	Y	6 lbs.	584026	84.00
Satin		**WSL** 26” Satin O-MegaStep	26 in.	Y	6 lbs.	585026	71.00
Black		**WSL** 26” Black O-MegaStep	26 in.	Y	6 lbs.	586026	84.00
Black		26” Grip Step	26 in.	Y	9 lbs.	415026	79.00
		BACK SPLASH ACCESSORY	**LENGTH**				
	ALL	**WSL** 88” Ford and Dodge Back Splash - Fits MegaSteps and O-MegaSteps* (Packaged as a P	88 in.	Y	6 lbs.	570088	57.00
	ALL	88” Chevrolet and GMC Back Splash - Fits MegaSteps and O-MegaSteps* (Packaged as a Pai	88 in.	Y	6 lbs.	570090	63.00
	ALL	98” Back Splash - Fits MegaSteps and O-MegaSteps (Packaged as a Pair)	98 in.	Y	6 lbs.	570098	79.00
		*Does Not Work on W2W or Van Applications					
	ALL	75" Powder Coated Black Aluminum Grip Step Back Splash	75 in.	Y	8 lbs.	410078	86.00
	ALL	85" Powder Coated Black Aluminum Grip Step Back Splash	85 in.	Y	8 lbs.	410088	93.00

Finish	Year	Description	Length	FDX	Weight	Item #	Retail
		MEGASTEP/O-MEGASTEP BRACKETS ONLY - Rocker Mount Installation (GAS)					
		CHEVROLET/GMC	**BOARDS**				
	14-17	Silverado/Sierra 1500 Regular Cab	54 in.	Y	18 lbs.	571441	120.00
	07-13	Silverado/Sierra 1500 Regular Cab	54 in.	Y	13 lbs.	570711	120.00
	15-17	Silverado/Sierra 2500HD/3500 Regular Cab	54 in.	Y	18 lbs.	571441	120.00
	07-14	Silverado/Sierra 2500HD/3500 Regular Cab	54 in.	Y	13 lbs.	570711	120.00
	14-17	Silverado/Sierra 1500 Double Cab	78 in.	Y	25 lbs.	571443	140.00
	07-13	Silverado/Sierra 1500 Extended Cab	78 in.	Y	20 lbs.	570713	140.00
	15-17	Silverado/Sierra 2500HD/3500 Double Cab	78 in.	Y	25 lbs.	571443	140.00
	07-14	Silverado/Sierra 2500HD/3500 Extended Cab	78 in.	Y	20 lbs.	570713	140.00
	14-17	Silverado/Sierra 1500 Crew Cab	88 in.	Y	25 lbs.	571443	140.00
	07-13	Silverado/Sierra 1500 Crew Cab	88 in.	Y	20 lbs.	570713	140.00
	15-17	Silverado/Sierra 2500HD/3500 Crew Cab	88 in.	Y	25 lbs.	571443	140.00
	07-14	Silverado/Sierra 2500HD/3500 Crew Cab	88 in.	Y	20 lbs.	570713	140.00
		MEGASTEP/O-MEGASTEP BRACKETS ONLY - Body Mount Installation (GAS OR DIESEL)					
		CHEVROLET/GMC					
	99-13	Silverado/Sierra 1500 Regular Cab	54 in.	Y	16 lbs.	571111	126.00
	15-17	Silverado/Sierra 2500HD/3500 Regular Cab	54 in.	Y	24 lbs.	571541	129.00
	01-14	Silverado/Sierra 2500HD/3500 Regular Cab	54 in.	Y	16 lbs.	571111	126.00
	99-13	Silverado/Sierra 1500 Extended Cab	78 in.	Y	25 lbs.	571113	184.00
	15-17	Silverado/Sierra 2500HD/3500 Double Cab	78 in.	Y	35 lbs.	571543	179.00
	01-14	Silverado/Sierra 2500HD/3500 Extended Cab	78 in.	Y	25 lbs.	571113	184.00
	04-13	Silverado/Sierra 1500 Crew Cab	88 in.	Y	25 lbs.	571113	184.00
	15-17	Silverado/Sierra 2500HD/3500 Crew Cab	88 in.	Y	35 lbs.	571543	179.00
	01-14	Silverado/Sierra 2500HD/3500 Crew Cab	88 in.	Y	25 lbs.	571113	184.00
		MEGASTEP/O-MEGASTEP BRACKETS ONLY					
		CHEVROLET/GMC					
	01-07	**WSL** Silverado/Sierra Crew Cab (Classic Body Style)	88 in.	Y	24 lbs.	570113	143.00
	15-17	Colorado/Canyon Extended Cab	72 in.	Y	14 lbs.	571515	143.00
	15-17	Colorado/Canyon Crew Cab	78 in.	Y	14 lbs.	571515	143.00
	04-14	Colorado/Canyon Extended/Crew Cab	78 in.	Y	22 lbs.	570412	190.00
	07-13	Avalanche (Without Factory Brackets)	88 in.	Y	20 lbs.	570713	140.00
	07-17	Suburban/Yukon XL (Without Factory Brackets)	88 in.	Y	20 lbs.	570713	140.00
	07-17	Tahoe/Yukon (Without Factory Brackets)	78 in.	Y	20 lbs.	570713	140.00
	07-13	Avalanche Fastener Package (Uses GM Factory Brackets)	88 in.	Y	2 lbs.	570716	10.00
	07-15	Suburban/Yukon XL Fastener Package (Uses GM Factory Brackets)	88 in.	Y	2 lbs.	570716	10.00
	07-15	Tahoe/Yukon Fastener Package (Uses GM Factory Brackets)	78 in.	Y	2 lbs.	570716	10.00
	09-17	**WSL** Chevrolet Traverse	78 in.	Y	14 lbs.	570764	149.00
	07-17	**WSL** GMC Acadia (Excludes Denali)	78 in.	Y	14 lbs.	570764	149.00
	08-17	**WSL** Buick Enclave	78 in.	Y	14 lbs.	570764	149.00
		SATURN					
	07-10	**WSL** Outlook	78 in.	Y	14 lbs.	570764	149.00
		MEGASTEP/O-MEGASTEP BRACKETS ONLY - Rocker Mount Installation (GAS OR DIESEL)					
		DODGE/RAM					
	09-17	Ram Regular Cab 1500	60 in.	Y	16 lbs.	571631	136.00
	09-14	**WSL** Ram Regular Cab 1500	60 in.	Y	31 lbs.	570931	120.00
	10-17	Ram Regular Cab 2500, 3500 (Also fits 11-17 Ram 3500/4500/5500 Chassis Cab)	60 in.	Y	16 lbs.	571631	136.00
	10-15	**WSL** Ram Regular Cab 2500, 3500 (Also fits 11-15 Ram 3500/4500/5500 Chassis Cab)	60 in.	Y	31 lbs.	570931	120.00
	09-17	Ram Quad Cab 1500	78 in.	Y	21 lbs.	571632	194.00
	09-14	**WSL** Ram Quad Cab 1500	78 in.	Y	16 lbs.	570932	144.00
	09-17	Ram Crew Cab 1500	88 in.	Y	21 lbs.	571632	194.00
	09-14	**WSL** Ram Crew Cab 1500	88 in.	Y	16 lbs.	570932	144.00
	10-17	Ram Crew Cab 2500, 3500 (Also fits 11-17 Ram 3500/4500/5500 Chassis Cab)	88 in.	Y	21 lbs.	571632	194.00
	10-15	**WSL** Ram Crew Cab 2500, 3500 (Also fits 11-15 Ram 3500/4500/5500 Chassis Cab)	88 in.	Y	16 lbs.	570932	144.00
	10-17	Ram Mega Cab 2500, 3500	98 in.	Y	21 lbs.	571632	194.00
	10-15	**WSL** Ram Mega Cab 2500, 3500	98 in.	Y	16 lbs.	570932	144.00
	11-17	Durango	78 in.	Y	22 lbs.	571134	179.00

Finish	Year	Description	Length	FDX	Weight	Item #	Retail
		MEGASTEP/O-MEGASTEP BRACKETS ONLY - Body Mount Installation (GAS OR DIESEL)					
		DODGE/RAM	**BOARDS**				
	09-17	Ram Regular Cab 1500	60 in.	Y	35 lbs.	571031	164.00
	10-17	Ram Regular Cab 2500, 3500 (Chassis Cab Requires Accessory Kit #571300 N/C)	60 in.	Y	35 lbs.	571031	164.00
	09-17	Ram Quad Cab 1500	78 in.	Y	40 lbs.	571032	214.00
	09-17	Ram Crew Cab 1500	88 in.	Y	40 lbs.	571032	214.00
	10-17	Ram Crew Cab 2500, 3500 (Chassis Cab Requires Accessory Kit #571300 N/C)	88 in.	Y	40 lbs.	571032	214.00
	10-17	Ram Mega Cab 2500, 3500	98 in.	Y	40 lbs.	571032	214.00
	02-08	Ram Regular Cab 1500 (Excludes SRT-10 & Rumble Bee)	54 in.	Y	16 lbs.	570231	126.00
	03-09	Ram Regular Cab 2500, 3500	54 in.	Y	16 lbs.	570231	126.00
	02-08	Ram Quad Cab 1500 (Excludes SRT-10 & Rumble Bee)	78 in.	Y	25 lbs.	570232	179.00
	03-09	Ram Quad Cab 2500, 3500	78 in.	Y	25 lbs.	570232	179.00
	06-08	**WSL** Ram Mega Cab 1500	98 in.	Y	33 lbs.	570633	223.00
	06-09	**WSL** Ram Mega Cab 2500, 3500	98 in.	Y	33 lbs.	570633	223.00
	08-10	Ram/Sterling Reg. Cab 3500/4500/5500 Chassis Cab (Requires Kit #551450 N/C)	60 in.	Y	22 lbs.	570231	126.00
	08-10	Ram/Sterling Quad Cab 3500/4500/5500 Chassis Cab (Requires Kit #551450 N/C)	78 in.	Y	31 lbs.	570232	179.00
	05-11	**WSL** Dakota Quad Cab	78 in.	Y	37 lbs.	570533	159.00
	04-09	**WSL** Durango (Also fits 07-09 Chrysler Aspen)	78 in.	Y	37 lbs.	570434	157.00
		MEGASTEP/O-MEGASTEP BRACKETS ONLY					
		FORD					
	15-17	F-150 Light Duty Regular Cab	60 in.	Y	9 lbs.	571521	106.00
	04-14	F-150 Light Duty Regular Cab	60 in.	Y	10 lbs.	570421	106.00
	15-17	F-150 Light Duty Super Cab	78 in.	Y	9 lbs.	571521	106.00
	04-14	F-150 Light Duty Super Cab	78 in.	Y	13 lbs.	570922	140.00
	15-17	F-150 Light Duty Super Crew	88 in.	Y	13 lbs.	571523	140.00
	04-14	F-150 Light Duty Super Crew	88 in.	Y	13 lbs.	570922	140.00
	2017	F-Series Super Duty Regular Cab	60 in.	Y	9 lbs.	571521	106.00
	99-16	F-Series Super Duty Regular Cab	54 in.	Y	13 lbs.	579921	120.00
	2017	F-Series Super Duty Super Cab	78 in.	Y	9 lbs.	571521	106.00
	99-16	F-Series Super Duty Super Cab	78 in.	Y	16 lbs.	579922	140.00
	2017	F-Series Super Duty Crew Cab	88 in.	Y	13 lbs.	571523	140.00
	99-16	F-Series Super Duty Crew Cab	88 in.	Y	16 lbs.	579922	140.00
	08-12	Escape	60 in.	Y	20 lbs.	570826	156.00
	11-17	Explorer (Some Drilling Required)	72 in.	Y	17 lbs.	571124	149.00
		TOYOTA					
	07-17	Tundra Regular Cab	60 in.	Y	11 lbs.	570751	106.00
	07-17	Tundra Double Cab	78 in.	Y	16 lbs.	570752	149.00
	07-17	Tundra CrewMax	88 in.	Y	16 lbs.	570752	149.00
	05-17	Tacoma Access Cab	72 in.	Y	10 lbs.	570553	106.00
	05-17	Tacoma Double Cab	88 in.	Y	10 lbs.	570553	106.00
	07-14	FJ Cruiser	60 in.	Y	10 lbs.	570553	106.00
	10-17	4Runner (Fits Limited Only)	72 in.	Y	15 lbs.	571054	134.00
	08-17	Highlander	72 in.	Y	13 lbs.	570856	156.00
		NISSAN					
	16-17	Titan XD Crew Cab	88 in.	Y	21 lbs.	571663	189.00
		JEEP					
	11-17	Grand Cherokee	72 in.	Y	22 lbs.	571134	179.00

Finish	Year	Description	Length	FDX	Weight	Item #	Retail
		MEGASTEP/O-MEGASTEP BRACKETS ONLY - WHEEL-TO-WHEEL - Rocker Mount Installation (GAS)					
		CHEVROLET/GMC	**BOARDS**				
	14-17	Silverado/Sierra 1500 Regular Cab Standard Box (6.5 ft. Box)	78 in.	Y	35 lbs.	571447	179.00
	07-13	Silverado/Sierra 1500 Regular Cab Standard Box (6.5 ft. Box)	78 in.	Y	36 lbs.	570717	223.00
	14-17	Silverado/Sierra 1500 Regular Cab Long Box (8 ft. Box)	88 in.	Y	35 lbs.	571447	179.00
	07-13	Silverado/Sierra 1500 Regular Cab Long Box (8 ft. Box)	88 in.	Y	36 lbs.	570717	223.00
	15-17	Silverado/Sierra 2500HD/3500 Regular Cab Long Box (8 ft. Box)	88 in.	Y	35 lbs.	571447	179.00
	07-14	Silverado/Sierra 2500HD/3500 Regular Cab Long Box (8 ft. Box)	88 in.	Y	36 lbs.	570717	223.00
	14-17	Silverado/Sierra 1500 Double Cab Short Box (5.8 ft. Box)	88 in.	Y	35 lbs.	571447	179.00
	07-13	Silverado/Sierra 1500 Extended Cab Short Box (5.8 ft. Box)	88 in.	Y	36 lbs.	570717	223.00
	14-17	Silverado/Sierra 1500 Double Cab Standard Box (6.5 ft. Box)	102 in.	Y	35 lbs.	571447	179.00
	07-13	Silverado/Sierra 1500 Extended Cab Standard Box (6.5 ft. Box)	102 in.	Y	36 lbs.	570717	223.00
	15-17	Silverado/Sierra 2500HD/3500 Double Cab Standard Box (6.5 ft. Box)	102 in.	Y	35 lbs.	571447	179.00
	07-14	Silverado/Sierra 2500HD/3500 Extended Cab Standard Box (6.5 ft. Box)	102 in.	Y	36 lbs.	570717	223.00
	07-13	Silverado/Sierra 1500 Extended Cab Long Box (8 ft. Box)	114 in.	Y	36 lbs.	570717	223.00
	15-17	Silverado/Sierra 2500HD/3500 Double Cab Long Box (8 ft. Box)	114 in.	Y	35 lbs.	571447	179.00
	07-14	Silverado/Sierra 2500HD/3500 Extended Cab Long Box (8 ft. Box)	114 in.	Y	36 lbs.	570717	223.00
	14-17	Silverado/Sierra 1500 Crew Cab Short Box (5.8 ft. Box)	102 in.	Y	35 lbs.	571447	179.00
	07-13	Silverado/Sierra 1500 Crew Cab Short Box (5.8 ft. Box)	102 in.	Y	36 lbs.	570717	223.00
	14-17	Silverado/Sierra 1500 Crew Cab Standard Box (6.5 ft. Box)	114 in.	Y	35 lbs.	571447	179.00
	15-17	Silverado/Sierra 2500HD/3500 Crew Cab Standard Box (6.5 ft. Box)	114 in.	Y	35 lbs.	571447	179.00
	07-14	Silverado/Sierra 2500HD/3500 Crew Cab Standard Box (6.5 ft. Box)	114 in.	Y	36 lbs.	570717	223.00
	15-17	Silverado/Sierra 2500HD/3500 Crew Cab Long Box (8 ft. Box)	125 in.	Y	35 lbs.	571447	179.00
	07-14	Silverado/Sierra 2500HD/3500 Crew Cab Long Box (8 ft. Box)	125 in.	Y	36 lbs.	570717	223.00
		MEGASTEP/O-MEGASTEP BRACKETS ONLY - WHEEL-TO-WHEEL - Body Mount Installation (GAS OR DIESEL)					
		CHEVROLET/GMC					
	99-13	Silverado/Sierra 1500 Regular Cab Standard Box (6.5 ft. Box)	78 in.	Y	31 lbs.	571117	230.00
	99-13	Silverado/Sierra 1500 Regular Cab Long Box (8 ft. Box)	88 in.	Y	31 lbs.	571117	230.00
	15-17	Silverado/Sierra 2500HD/3500 Regular Cab Long Box (8 ft. Box)	88 in.	Y	45 lbs.	571547	210.00
	01-14	Silverado/Sierra 2500HD/3500 Regular Cab Long Box (8 ft. Box)	88 in.	Y	31 lbs.	571117	230.00
	99-13	Silverado/Sierra 1500 Extended Cab Standard Box (6.5 ft. Box)	102 in.	Y	31 lbs.	571117	230.00
	15-17	Silverado/Sierra 2500HD/3500 Double Cab Standard Box (6.5 ft. Box)	102 in.	Y	45 lbs.	571547	210.00
	01-14	Silverado/Sierra 2500HD/3500 Extended Cab Standard Box (6.5 ft. Box)	102 in.	Y	31 lbs.	571117	230.00
	99-13	Silverado/Sierra 1500 Extended Cab Long Box (8 ft. Box)	114 in.	Y	31 lbs.	571117	230.00
	15-17	Silverado/Sierra 2500HD/3500 Double Cab Long Box (8 ft. Box)	114 in.	Y	45 lbs.	571547	210.00
	01-14	Silverado/Sierra 2500HD/3500 Extended Cab Long Box (8 ft. Box)	114 in.	Y	31 lbs.	571117	230.00
	04-13	Silverado/Sierra 1500 Crew Cab Short Box (5.8 ft. Box)	102 in.	Y	31 lbs.	571117	230.00
	15-17	Silverado/Sierra 2500HD/3500 Crew Cab Standard Box (6.5 ft. Box) (w/o Factory Flaps)	114 in.	Y	45 lbs.	571547	210.00
	01-14	Silverado/Sierra 2500HD/3500 Crew Cab Standard Box (6.5 ft. Box)	114 in.	Y	31 lbs.	571117	230.00
	15-17	Silverado/Sierra 2500HD/3500 Crew Cab Standard Box (6.5 ft. Box) (w/Factory Flaps)	108 in.	Y	45 lbs.	571547	210.00
	15-17	Silverado/Sierra 2500HD/3500 Crew Cab Long Box (8 ft. Box)	125 in.	Y	45 lbs.	571547	210.00
	01-14	Silverado/Sierra 2500HD/3500 Crew Cab Long Box (8 ft. Box)	125 in.	Y	31 lbs.	571117	230.00
		MEGASTEP/O-MEGASTEP BRACKETS ONLY - WHEEL-TO-WHEEL - Rocker Mount Installation (GAS OR DIESEL)					
		RAM					
	09-17	Ram Regular Cab 1500 (6.4 ft. Box)	78 in.	Y	31 lbs.	570938	277.00
	09-14	**WSL** Ram Regular Cab 1500 (6.4 ft. Box)	78 in.	Y	21 lbs.	570937	230.00
	09-17	Ram Regular Cab 1500 (8 ft. Box)	98 in.	Y	31 lbs.	570938	277.00
	09-14	**WSL** Ram Regular Cab 1500 (8 ft. Box)	98 in.	Y	21 lbs.	570937	230.00
	10-12	**WSL** Ram Regular Cab 2500, 3500 (8 ft. Box) (Also fits 2013 Ram Reg Cab 2500) (Excl. 2wd)	98 in.	Y	26 lbs.	571037	263.00
	14-17	Ram Regular Cab 2500 (8 ft. Box)	98 in.	Y	31 lbs.	571438	277.00
	13-17	Ram Regular Cab 3500 (8 ft. Box)	98 in.	Y	32 lbs.	571338	233.00
	13-15	**WSL** Ram Regular Cab 3500 (8 ft. Box)	98 in.	Y	26 lbs.	571337	263.00
	09-17	Ram Quad Cab 1500 (6.4 ft. Box)	98 in.	Y	31 lbs.	570938	277.00
	09-14	**WSL** Ram Quad Cab 1500 (6.4 ft. Box)	98 in.	Y	21 lbs.	570937	230.00
	09-17	Ram Crew Cab 1500 (5.7 ft. Box)	98 in.	Y	31 lbs.	570938	277.00
	09-14	**WSL** Ram Crew Cab 1500 (5.7 ft. Box)	98 in.	Y	21 lbs.	570937	230.00
	09-17	Ram Crew Cab 1500 (6.4 ft. Box)	102 in.	Y	31 lbs.	570938	277.00
	09-14	**WSL** Ram Crew Cab 1500 (6.4 ft. Box)	102 in.	Y	21 lbs.	570937	230.00
	14-17	Ram Crew Cab 2500 (6.4 ft. Box)	102 in.	Y	31 lbs.	571438	277.00
	13-17	Ram Crew Cab 3500 (6.4 ft. Box) (Includes Dual Wheel)	102 in.	Y	32 lbs.	571338	233.00
	13-15	**WSL** Ram Crew Cab 3500 (6.4 ft. Box) (Includes Dual Wheel)	102 in.	Y	26 lbs.	571337	263.00
	10-12	**WSL** Ram Crew Cab 2500, 3500 (6.4 ft. Box) (Also fits 2013 Ram Crew Cab 2500)	102 in.	Y	26 lbs.	571037	263.00
	14-17	Ram Crew Cab 2500 (8 ft. Box)	125 in.	Y	31 lbs.	571438	277.00
	13-17	Ram Crew Cab 3500 (8 ft. Box) (Includes Dual Wheel)	125 in.	Y	32 lbs.	571338	233.00
	13-15	**WSL** Ram Crew Cab 3500 (8 ft. Box) (Includes Dual Wheel)	125 in.	Y	26 lbs.	571337	263.00
	10-12	**WSL** Ram Crew Cab 2500, 3500 (8 ft. Box) (Incl. DW) (Also fits 2013 Ram Crew Cab 2500) (Ex	125 in.	Y	26 lbs.	571037	263.00
	14-17	Ram Mega Cab 2500	114 in.	Y	31 lbs.	571438	277.00
	13-17	Ram Mega Cab 3500	114 in.	Y	32 lbs.	571338	233.00
	13-15	**WSL** Ram Mega Cab 3500	114 in.	Y	26 lbs.	571337	263.00
	10-12	**WSL** Ram Mega Cab 2500, 3500/Ram Mega Cab DW (Also fits 2013 Ram Mega Cab 2500) (E	114 in.	Y	26 lbs.	571037	263.00

Finish	Year	Description	Length	FDX	Weight	Item #	Retail
		MEGASTEP/O-MEGASTEP BRACKETS ONLY - WHEEL-TO-WHEEL - Body Mount Installation (GAS OR DIESEL)					
		DODGE/RAM	**BOARDS**				
	09-17	Ram Regular Cab 1500 (6.4 ft. Box)	78 in.	Y	45 lbs.	570939	283.00
	09-17	Ram Regular Cab 1500 (8 ft. Box)	98 in.	Y	45 lbs.	570939	283.00
	14-17	Ram Regular Cab 2500 (8 ft. Box)	98 in.	Y	40 lbs.	571439	286.00
	13-17	Ram Regular Cab 3500 (8 ft. Box)	98 in.	Y	40 lbs.	571339	286.00
	09-17	Ram Quad Cab 1500 (6.4 ft. Box)	98 in.	Y	45 lbs.	570939	283.00
	09-17	Ram Crew Cab 1500 (5.7 ft. Box)	98 in.	Y	45 lbs.	570939	283.00
	09-17	Ram Crew Cab 1500 (6.4 ft. Box)	102 in.	Y	45 lbs.	570939	283.00
	14-17	Ram Crew Cab 2500 (6.4 ft. Box)	102 in.	Y	40 lbs.	571439	286.00
	13-17	Ram Crew Cab 3500 (6.4 ft. Box)	102 in.	Y	40 lbs.	571339	286.00
	14-17	Ram Crew Cab 2500 (8 ft. Box)	125 in.	Y	40 lbs.	571439	286.00
	13-17	Ram Crew Cab 3500 (8 ft. Box) (Includes Dual Wheel)	125 in.	Y	40 lbs.	571339	286.00
	14-17	Ram Mega Cab 2500	114 in.	Y	40 lbs.	571439	286.00
	13-17	Ram Mega Cab 3500	114 in.	Y	40 lbs.	571339	286.00
	02-08	Ram Regular Cab 1500 Short Box (Also fits 03-09 Ram Reg Cab 2500, 3500)	78 in.	Y	39 lbs.	570237	233.00
	02-08	Ram Regular Cab 1500 Long Box	98 in.	Y	39 lbs.	570237	233.00
	03-09	Ram Regular Cab 2500, 3500 Long Box (Includes Dual Wheel)	98 in.	Y	39 lbs.	570237	233.00
	02-08	Ram Quad Cab 1500 Short Box (Also fits 03-09 Ram Quad Cab 2500, 3500)	98 in.	Y	39 lbs.	570237	233.00
	02-08	Ram Quad Cab 1500 Long Box	114 in.	Y	39 lbs.	570237	233.00
	03-09	Ram Quad Cab 2500, 3500 Long Box (Includes Dual Wheel)	114 in.	Y	39 lbs.	570237	233.00
		MEGASTEP/O-MEGASTEP BRACKETS ONLY - WHEEL-TO-WHEEL					
		FORD					
	15-17	F-150 Regular Cab (6.5 ft. Box)	78 in.	Y	21 lbs.	571529	164.00
	09-14	F-150 Regular Cab (6.5 ft. Box)	78 in.	Y	21 lbs.	570929	164.00
	15-17	F-150 Regular Cab (8 ft. Box)	98 in.	Y	21 lbs.	571529	164.00
	09-14	F-150 Regular Cab (8 ft. Box)	98 in.	Y	21 lbs.	570929	164.00
	15-17	F-150 Super Cab (5.5 ft. Box)	88 in.	Y	21 lbs.	571529	164.00
	09-14	F-150 Super Cab (5.5 ft. Box)	88 in.	Y	21 lbs.	570929	164.00
	15-17	F-150 Super Cab (6.5 ft. Box)	98 in.	Y	21 lbs.	571529	164.00
	09-14	F-150 Super Cab (6.5 ft. Box)	98 in.	Y	21 lbs.	570929	164.00
	15-17	F-150 Super Cab (8 ft. Box)	114 in.	Y	21 lbs.	571529	164.00
	09-14	F-150 Super Cab (8 ft. Box)	114 in.	Y	21 lbs.	570929	164.00
	15-17	F-150 Super Crew (5.5 ft. Box)	102 in.	Y	21 lbs.	571529	164.00
	09-14	F-150 Super Crew (5.5 ft. Box)	102 in.	Y	21 lbs.	570929	164.00
	15-17	F-150 Super Crew (6.5 ft. Box)	108 in.	Y	21 lbs.	571529	164.00
	09-14	F-150 Super Crew (6.5 ft. Box)	108 in.	Y	21 lbs.	570929	164.00
	2017	F-Series Super Duty Regular Cab (8 ft. Box) (Includes Dual Wheel)	98 in.	Y	22 lbs.	571729	207.00
	08-16	F-Series Super Duty Regular Cab (8 ft. Box)	88 in.	Y	25 lbs.	570829	226.00
	2017	F-Series Super Duty Super Cab (6.75 ft. Box)	98 in.	Y	22 lbs.	571729	207.00
	08-16	F-Series Super Duty Super Cab (6.75 ft. Box)	98 in.	Y	25 lbs.	570829	226.00
	2017	F-Series Super Duty Super Cab (8 ft. Box) (Includes Dual Wheel)	114 in.	Y	22 lbs.	571729	207.00
	08-16	F-Series Super Duty Super Cab (8 ft. Box) (Includes Dual Wheel)	114 in.	Y	25 lbs.	570829	226.00
	2017	F-Series Super Duty Crew Cab (6.75 ft. Box)	108 in.	Y	22 lbs.	571729	207.00
	08-16	F-Series Super Duty Crew Cab (6.75 ft. Box)	114 in.	Y	25 lbs.	570829	226.00
	2017	F-Series Super Duty Crew Cab (8 ft. Box) (Includes Dual Wheel)	125 in.	Y	22 lbs.	571729	207.00
	08-16	F-Series Super Duty Crew Cab (8 ft. Box) (Includes Dual Wheel)	125 in.	Y	25 lbs.	570829	226.00
		TOYOTA					
	07-17	Tundra Regular Cab (6.5 ft. Box)	78 in.	Y	28 lbs.	570757	240.00
	07-17	Tundra Regular Cab (8 ft. Box)	102 in.	Y	28 lbs.	570757	240.00
	07-17	Tundra Double Cab (6.5 ft. Box)	102 in.	Y	28 lbs.	570757	240.00
	07-17	Tundra Double Cab (8 ft. Box)	114 in.	Y	28 lbs.	570757	240.00
	07-17	Tundra CrewMax (5.5 ft. Box)	102 in.	Y	28 lbs.	570757	240.00
		MEGASTEP UNIVERSAL STEP BOARDS ONLY	**BOARDS**				
		54 in. MegaStep	54 in.	Y	24 lbs.	575054	371.00
		60 in. MegaStep	60 in.	Y	26 lbs.	575060	386.00
		72 in. MegaStep	72 in.	Y	34 lbs.	575072	436.00
		78 in. MegaStep	78 in.	Y	36 lbs.	575078	439.00
		88 in. MegaStep	88 in.	Y	41 lbs.	575088	464.00
		98 in. MegaStep	98 in.	Y	44 lbs.	575098	550.00
		102 in. MegaStep	102 in.	Y	46 lbs.	575102	551.00
		108 in. MegaStep	108 in.	N	50 lbs.	575108	609.00
		114 in. MegaStep	114 in.	N	52 lbs.	575114	621.00

Finish	Year	Description	Length	FDX	Weight	Item #	Retail
		O-MEGASTEP UNIVERSAL STEP BOARDS ONLY	**BOARDS**				
Satin		**WSL** 54 in. O-MegaStep Satin	54 in.	Y	20 lbs.	585054	160.00
Satin		**WSL** 60 in. O-MegaStep Satin	60 in.	Y	21 lbs.	585060	176.00
Satin		**WSL** 72 in. O-MegaStep Satin	72 in.	Y	26 lbs.	585072	156.00
Satin		**WSL** 78 in. O-MegaStep Satin	78 in.	Y	29 lbs.	585078	166.00
Satin		**WSL** 88 in. O-MegaStep Satin	88 in.	Y	33 lbs.	585088	203.00
Satin		**WSL** 98 in. O-MegaStep Satin	98 in.	Y	36 lbs.	585098	241.00
Satin		**WSL** 102 in. O-MegaStep Satin	102 in.	Y	37 lbs.	585102	251.00
Satin		**WSL** 108 in. O-MegaStep Satin	108 in.	N	39 lbs.	585108	276.00
Satin		**WSL** 114 in. O-MegaStep Satin	114 in.	N	40 lbs.	585114	290.00
Satin		**WSL** 125 in. O-MegaStep Satin	125 in.	N	46 lbs.	585125	350.00
Black		**WSL** 54 in. O-MegaStep Black	54 in.	Y	20 lbs.	586054	214.00
Black		**WSL** 72 in. O-MegaStep Black	72 in.	Y	26 lbs.	586072	271.00
Black		**WSL** 78 in. O-MegaStep Black	78 in.	Y	29 lbs.	586078	211.00
Black		**WSL** 88 in. O-MegaStep Black	88 in.	Y	33 lbs.	586088	241.00
Black		**WSL** 98 in. O-MegaStep Black	98 in.	Y	36 lbs.	586098	286.00
Black		**WSL** 102 in. O-MegaStep Black	102 in.	Y	37 lbs.	586102	300.00
Black		**WSL** 114 in. O-MegaStep Black	114 in.	N	40 lbs.	586114	323.00
Black		**WSL** 125 in. O-MegaStep Black	125 in.	N	46 lbs.	586125	393.00
		O-MEGA II 6" OVAL STEPS - BRACKETS ONLY - Rocker Mount Installation (GAS)					
		CHEVROLET/GMC	**BOARDS**				
	14-17	Silverado/Sierra 1500 Regular Cab	54 in.	Y	18 lbs.	571441	120.00
	07-13	Silverado/Sierra 1500 Regular Cab	54 in.	Y	13 lbs.	570711	120.00
	15-17	Silverado/Sierra 2500HD/3500 Regular Cab	54 in.	Y	18 lbs.	571441	120.00
	07-14	Silverado/Sierra 2500HD/3500 Regular Cab	54 in.	Y	13 lbs.	570711	120.00
	14-17	Silverado/Sierra 1500 Double Cab	78 in.	Y	25 lbs.	571443	140.00
	07-13	Silverado/Sierra 1500 Extended Cab	78 in.	Y	20 lbs.	570713	140.00
	15-17	Silverado/Sierra 2500HD/3500 Double Cab	78 in.	Y	25 lbs.	571443	140.00
	07-14	Silverado/Sierra 2500HD/3500 Extended Cab	78 in.	Y	20 lbs.	570713	140.00
	14-17	Silverado/Sierra 1500 Crew Cab	88 in.	Y	25 lbs.	571443	140.00
	07-13	Silverado/Sierra 1500 Crew Cab	88 in.	Y	20 lbs.	570713	140.00
	15-17	Silverado/Sierra 2500HD/3500 Crew Cab	88 in.	Y	25 lbs.	571443	140.00
	07-14	Silverado/Sierra 2500HD/3500 Crew Cab	88 in.	Y	20 lbs.	570713	140.00
		O-MEGA II 6" OVAL STEPS - BRACKETS ONLY - Body Mount Installation (GAS OR DIESEL)					
		CHEVROLET/GMC					
	99-13	Silverado/Sierra 1500 Regular Cab	54 in.	Y	16 lbs.	571111	126.00
	15-17	Silverado/Sierra 2500HD/3500 Regular Cab	54 in.	Y	24 lbs.	571541	129.00
	01-14	Silverado/Sierra 2500HD/3500 Regular Cab	54 in.	Y	16 lbs.	571111	126.00
	99-13	Silverado/Sierra 1500 Extended Cab	78 in.	Y	25 lbs.	571113	184.00
	15-17	Silverado/Sierra 2500HD/3500 Double Cab	78 in.	Y	35 lbs.	571543	179.00
	01-14	Silverado/Sierra 2500HD/3500 Extended Cab	78 in.	Y	25 lbs.	571113	184.00
	04-13	Silverado/Sierra 1500 Crew Cab	88 in.	Y	25 lbs.	571113	184.00
	15-17	Silverado/Sierra 2500HD/3500 Crew Cab	88 in.	Y	35 lbs.	571543	179.00
	01-14	Silverado/Sierra 2500HD/3500 Crew Cab	88 in.	Y	25 lbs.	571113	184.00
		O-MEGA II 6" OVAL STEPS - BRACKETS ONLY					
		CHEVROLET/GMC					
	01-07	**WSL** Silverado/Sierra Crew Cab (Classic Body Style)	88 in.	Y	24 lbs.	570113	143.00
	15-17	Colorado/Canyon Extended Cab	72 in.	Y	14 lbs.	571515	143.00
	15-17	Colorado/Canyon Crew Cab	78 in.	Y	14 lbs.	571515	143.00
	04-14	Colorado/Canyon Extended/Crew Cab	78 in.	Y	22 lbs.	570412	190.00
	07-13	Avalanche (Without Factory Brackets)	88 in.	Y	20 lbs.	570713	140.00
	07-17	Suburban/Yukon XL (Without Factory Brackets)	88 in.	Y	20 lbs.	570713	140.00
	07-17	Tahoe/Yukon (Without Factory Brackets)	78 in.	Y	20 lbs.	570713	140.00
	07-13	Avalanche Fastener Package (Uses GM Factory Brackets)	88 in.	Y	2 lbs.	570716	10.00
	07-15	Suburban/Yukon XL Fastener Package (Uses GM Factory Brackets)	88 in.	Y	2 lbs.	570716	10.00
	07-15	Tahoe/Yukon Fastener Package (Uses GM Factory Brackets)	78 in.	Y	2 lbs.	570716	10.00
	09-17	**WSL** Chevrolet Traverse	78 in.	Y	14 lbs.	570764	149.00
	07-17	**WSL** GMC Acadia (Excludes Denali)	78 in.	Y	14 lbs.	570764	149.00
	08-17	**WSL** Buick Enclave	78 in.	Y	14 lbs.	570764	149.00
		SATURN					
	07-10	**WSL** Outlook	78 in.	Y	14 lbs.	570764	149.00

Finish	Year	Description	Length	FDX	Weight	Item #	Retail
		O-MEGA II 6" OVAL STEPS - BRACKETS ONLY - Rocker Mount Installation (GAS OR DIESEL)					
		DODGE/RAM	**BOARDS**				
	09-17	Ram Regular Cab 1500	60 in.	Y	16 lbs.	571631	136.00
	09-14	**WSL** Ram Regular Cab 1500	60 in.	Y	31 lbs.	570931	120.00
	10-17	Ram Regular Cab 2500, 3500 (Also fits 11-16 Ram 3500/4500/5500 Chassis Cab)	60 in.	Y	16 lbs.	571631	136.00
	10-15	**WSL** Ram Regular Cab 2500, 3500 (Also fits 11-13 Ram 3500/4500/5500 Chassis Cab)	60 in.	Y	31 lbs.	570931	120.00
	09-17	Ram Quad Cab 1500	78 in.	Y	21 lbs.	571632	194.00
	09-14	**WSL** Ram Quad Cab 1500	78 in.	Y	16 lbs.	570932	144.00
	09-17	Ram Crew Cab 1500	88 in.	Y	21 lbs.	571632	194.00
	09-14	**WSL** Ram Crew Cab 1500	88 in.	Y	16 lbs.	570932	144.00
	10-17	Ram Crew Cab 2500, 3500 (Also fits 11-16 Ram 3500/4500/5500 Chassis Cab)	88 in.	Y	21 lbs.	571632	194.00
	10-15	**WSL** Ram Crew Cab 2500, 3500 (Also fits 11-13 Ram 3500/4500/5500 Chassis Cab)	88 in.	Y	16 lbs.	570932	144.00
	10-17	Ram Mega Cab 2500, 3500	98 in.	Y	21 lbs.	571632	194.00
	10-15	**WSL** Ram Mega Cab 2500, 3500	98 in.	Y	16 lbs.	570932	144.00
	11-17	Durango	78 in.	Y	22 lbs.	571134	179.00
		O-MEGA II 6" OVAL STEPS - BRACKETS ONLY - Body Mount Installation (GAS OR DIESEL)					
		DODGE/RAM					
	09-17	Ram Regular Cab 1500	60 in.	Y	35 lbs.	571031	164.00
	10-17	Ram Regular Cab 2500, 3500 (Chassis Cab Requires Accessory Kit #571300 N/C)	60 in.	Y	35 lbs.	571031	164.00
	09-17	Ram Quad Cab 1500	78 in.	Y	40 lbs.	571032	214.00
	09-17	Ram Crew Cab 1500	88 in.	Y	40 lbs.	571032	214.00
	10-17	Ram Crew Cab 2500, 3500 (Chassis Cab Requires Accessory Kit #571300 N/C)	88 in.	Y	40 lbs.	571032	214.00
	10-17	Ram Mega Cab 2500, 3500	98 in.	Y	40 lbs.	571032	214.00
	02-08	Ram Regular Cab 1500 (Excludes SRT-10 & Rumble Bee)	54 in.	Y	16 lbs.	570231	126.00
	03-09	Ram Regular Cab 2500, 3500	54 in.	Y	16 lbs.	570231	126.00
	02-08	Ram Quad Cab 1500 (Excludes SRT-10 & Rumble Bee)	78 in.	Y	25 lbs.	570232	179.00
	03-09	Ram Quad Cab 2500, 3500	78 in.	Y	25 lbs.	570232	179.00
	06-08	**WSL** Ram Mega Cab 1500	98 in.	Y	33 lbs.	570633	223.00
	06-09	**WSL** Ram Mega Cab 2500, 3500	98 in.	Y	33 lbs.	570633	223.00
	08-10	Ram/Sterling Reg. Cab 3500/4500/5500 Chassis Cab (Requires Kit #551450 N/C)	60 in.	Y	22 lbs.	570231	126.00
	08-10	Ram/Sterling Quad Cab 3500/4500/5500 Chassis Cab (Requires Kit #551450 N/C)	78 in.	Y	31 lbs.	570232	179.00
	05-11	**WSL** Dakota Quad Cab	78 in.	Y	37 lbs.	570533	159.00
	04-09	**WSL** Durango (Also fits 07-09 Chrysler Aspen)	78 in.	Y	37 lbs.	570434	157.00
		O-MEGA II 6" OVAL STEPS - BRACKETS ONLY					
		FORD					
	15-17	F-150 Light Duty Regular Cab	60 in.	Y	9 lbs.	571521	106.00
	04-14	F-150 Light Duty Regular Cab	60 in.	Y	10 lbs.	570421	106.00
	15-17	F-150 Light Duty Super Cab	78 in.	Y	9 lbs.	571521	106.00
	04-14	F-150 Light Duty Super Cab	78 in.	Y	13 lbs.	570922	140.00
	15-17	F-150 Light Duty Super Crew	88 in.	Y	13 lbs.	571523	140.00
	04-14	F-150 Light Duty Super Crew	88 in.	Y	13 lbs.	570922	140.00
	2017	F-Series Super Duty Regular Cab	60 in.	Y	9 lbs.	571521	106.00
	99-16	F-Series Super Duty Regular Cab	54 in.	Y	13 lbs.	579921	120.00
	2017	F-Series Super Duty Super Cab	78 in.	Y	9 lbs.	571521	106.00
	99-16	F-Series Super Duty Super Cab	78 in.	Y	16 lbs.	579922	140.00
	2017	F-Series Super Duty Crew Cab	88 in.	Y	13 lbs.	571523	140.00
	99-16	F-Series Super Duty Crew Cab	88 in.	Y	16 lbs.	579922	140.00
	08-12	Escape	60 in.	Y	20 lbs.	570826	156.00
	11-17	Explorer (Some Drilling Required)	72 in.	Y	17 lbs.	571124	149.00
		TOYOTA					
	07-17	Tundra Regular Cab	60 in.	Y	11 lbs.	570751	106.00
	07-17	Tundra Double Cab	78 in.	Y	16 lbs.	570752	149.00
	07-17	Tundra CrewMax	88 in.	Y	16 lbs.	570752	149.00
	05-17	Tacoma Access Cab	72 in.	Y	10 lbs.	570553	106.00
	05-17	Tacoma Double Cab	88 in.	Y	10 lbs.	570553	106.00
	07-14	FJ Cruiser	60 in.	Y	10 lbs.	570553	106.00
	10-17	4Runner (Fits Limited Only)	72 in.	Y	15 lbs.	571054	134.00
	08-17	Highlander	72 in.	Y	13 lbs.	570856	156.00
		NISSAN					
	16-17	Titan XD Crew Cab	88 in.	Y	21 lbs.	571663	189.00
		JEEP					
	11-17	Grand Cherokee	72 in.	Y	22 lbs.	571134	179.00

Finish	Year	Description	Length	FDX	Weight	Item #	Retail
		O-MEGA II 6" OVAL STEPS - BRACKETS ONLY - WHEEL-TO-WHEEL - Rocker Mount Installation (GAS)					
		CHEVROLET/GMC	**BOARDS**				
	14-17	Silverado/Sierra 1500 Regular Cab Standard Box (6.5 ft. Box)	78 in.	Y	35 lbs.	571447	179.00
	07-13	Silverado/Sierra 1500 Regular Cab Standard Box (6.5 ft. Box)	78 in.	Y	36 lbs.	570717	223.00
	14-17	Silverado/Sierra 1500 Regular Cab Long Box (8 ft. Box)	88 in.	Y	35 lbs.	571447	179.00
	07-13	Silverado/Sierra 1500 Regular Cab Long Box (8 ft. Box)	88 in.	Y	36 lbs.	570717	223.00
	15-17	Silverado/Sierra 2500HD/3500 Regular Cab Long Box (8 ft. Box)	88 in.	Y	35 lbs.	571447	179.00
	07-14	Silverado/Sierra 2500HD/3500 Regular Cab Long Box (8 ft. Box)	88 in.	Y	36 lbs.	570717	223.00
	14-17	Silverado/Sierra 1500 Double Cab Short Box (5.8 ft. Box)	88 in.	Y	35 lbs.	571447	179.00
	07-13	Silverado/Sierra 1500 Extended Cab Short Box (5.8 ft. Box)	88 in.	Y	36 lbs.	570717	223.00
	14-17	Silverado/Sierra 1500 Double Cab Standard Box (6.5 ft. Box)	102 in.	Y	35 lbs.	571447	179.00
	07-13	Silverado/Sierra 1500 Extended Cab Standard Box (6.5 ft. Box)	102 in.	Y	36 lbs.	570717	223.00
	15-17	Silverado/Sierra 2500HD/3500 Double Cab Standard Box (6.5 ft. Box)	102 in.	Y	35 lbs.	571447	179.00
	07-14	Silverado/Sierra 2500HD/3500 Extended Cab Standard Box (6.5 ft. Box)	102 in.	Y	36 lbs.	570717	223.00
	07-13	Silverado/Sierra 1500 Extended Cab Long Box (8 ft. Box)	114 in.	Y	36 lbs.	570717	223.00
	15-17	Silverado/Sierra 2500HD/3500 Double Cab Long Box (8 ft. Box)	114 in.	Y	35 lbs.	571447	179.00
	07-14	Silverado/Sierra 2500HD/3500 Extended Cab Long Box (8 ft. Box)	114 in.	Y	36 lbs.	570717	223.00
	14-17	Silverado/Sierra 1500 Crew Cab Short Box (5.8 ft. Box)	102 in.	Y	35 lbs.	571447	179.00
	07-13	Silverado/Sierra 1500 Crew Cab Short Box (5.8 ft. Box)	102 in.	Y	36 lbs.	570717	223.00
	14-17	Silverado/Sierra 1500 Crew Cab Standard Box (6.5 ft. Box)	114 in.	Y	35 lbs.	571447	179.00
	15-17	Silverado/Sierra 2500HD/3500 Crew Cab Standard Box (6.5 ft. Box)	114 in.	Y	35 lbs.	571447	179.00
	07-14	Silverado/Sierra 2500HD/3500 Crew Cab Standard Box (6.5 ft. Box)	114 in.	Y	36 lbs.	570717	223.00
	15-17	Silverado/Sierra 2500HD/3500 Crew Cab Long Box (8 ft. Box)	125 in.	Y	35 lbs.	571447	179.00
	07-14	Silverado/Sierra 2500HD/3500 Crew Cab Long Box (8 ft. Box)	125 in.	Y	36 lbs.	570717	223.00
		O-MEGA II 6" OVAL STEPS - BRACKETS ONLY - WHEEL-TO-WHEEL - Body Mount Installation (GAS OR DIESEL)					
		CHEVROLET/GMC					
	99-13	Silverado/Sierra 1500 Regular Cab Standard Box (6.5 ft. Box)	78 in.	Y	31 lbs.	571117	230.00
	99-13	Silverado/Sierra 1500 Regular Cab Long Box (8 ft. Box)	88 in.	Y	31 lbs.	571117	230.00
	15-17	Silverado/Sierra 2500HD/3500 Regular Cab Long Box (8 ft. Box)	88 in.	Y	45 lbs.	571547	210.00
	01-14	Silverado/Sierra 2500HD/3500 Regular Cab Long Box (8 ft. Box)	88 in.	Y	31 lbs.	571117	230.00
	99-13	Silverado/Sierra 1500 Extended Cab Standard Box (6.5 ft. Box)	102 in.	Y	31 lbs.	571117	230.00
	15-17	Silverado/Sierra 2500HD/3500 Double Cab Standard Box (6.5 ft. Box)	102 in.	Y	45 lbs.	571547	210.00
	01-14	Silverado/Sierra 2500HD/3500 Extended Cab Standard Box (6.5 ft. Box)	102 in.	Y	31 lbs.	571117	230.00
	99-13	Silverado/Sierra 1500 Extended Cab Long Box (8 ft. Box)	114 in.	Y	31 lbs.	571117	230.00
	15-17	Silverado/Sierra 2500HD/3500 Double Cab Long Box (8 ft. Box)	114 in.	Y	45 lbs.	571547	210.00
	01-14	Silverado/Sierra 2500HD/3500 Extended Cab Long Box (8 ft. Box)	114 in.	Y	31 lbs.	571117	230.00
	04-13	Silverado/Sierra 1500 Crew Cab Short Box (5.8 ft. Box)	102 in.	Y	31 lbs.	571117	230.00
	15-17	Silverado/Sierra 2500HD/3500 Crew Cab Standard Box (6.5 ft. Box) (w/o Factory Flaps)	114 in.	Y	45 lbs.	571547	210.00
	01-14	Silverado/Sierra 2500HD/3500 Crew Cab Standard Box (6.5 ft. Box)	114 in.	Y	31 lbs.	571117	230.00
	15-17	Silverado/Sierra 2500HD/3500 Crew Cab Standard Box (6.5 ft. Box) (w/Factory Flaps)	108 in.	Y	45 lbs.	571547	210.00
	15-17	Silverado/Sierra 2500HD/3500 Crew Cab Long Box (8 ft. Box)	125 in.	Y	45 lbs.	571547	210.00
	01-14	Silverado/Sierra 2500HD/3500 Crew Cab Long Box (8 ft. Box)	125 in.	Y	31 lbs.	571117	230.00
		O-MEGA II 6" OVAL STEPS - BRACKETS ONLY - WHEEL-TO-WHEEL - Rocker Mount Installation (GAS OR DIESEL)					
		RAM					
	09-17	Ram Regular Cab 1500 (6.4 ft. Box)	78 in.	Y	31 lbs.	570938	277.00
	09-14	**WSL** Ram Regular Cab 1500 (6.4 ft. Box)	78 in.	Y	21 lbs.	570937	230.00
	09-17	Ram Regular Cab 1500 (8 ft. Box)	98 in.	Y	31 lbs.	570938	277.00
	09-14	**WSL** Ram Regular Cab 1500 (8 ft. Box)	98 in.	Y	21 lbs.	570937	230.00
	10-12	**WSL** Ram Regular Cab 2500, 3500 (8 ft. Box) (Also fits 2013 Ram Reg Cab 2500) (Excl. 2wd)	98 in.	Y	26 lbs.	571037	263.00
	14-17	Ram Regular Cab 2500 (8 ft. Box)	98 in.	Y	31 lbs.	571438	277.00
	13-17	Ram Regular Cab 3500 (8 ft. Box)	98 in.	Y	32 lbs.	571338	233.00
	13-15	**WSL** Ram Regular Cab 3500 (8 ft. Box)	98 in.	Y	26 lbs.	571337	263.00
	09-17	Ram Quad Cab 1500 (6.4 ft. Box)	98 in.	Y	31 lbs.	570938	277.00
	09-14	**WSL** Ram Quad Cab 1500 (6.4 ft. Box)	98 in.	Y	21 lbs.	570937	230.00
	09-17	Ram Crew Cab 1500 (5.7 ft. Box)	98 in.	Y	31 lbs.	570938	277.00
	09-14	**WSL** Ram Crew Cab 1500 (5.7 ft. Box)	98 in.	Y	21 lbs.	570937	230.00
	09-17	Ram Crew Cab 1500 (6.4 ft. Box)	102 in.	Y	31 lbs.	570938	277.00
	09-14	**WSL** Ram Crew Cab 1500 (6.4 ft. Box)	102 in.	Y	21 lbs.	570937	230.00
	14-17	Ram Crew Cab 2500 (6.4 ft. Box)	102 in.	Y	31 lbs.	571438	277.00
	13-17	Ram Crew Cab 3500 (6.4 ft. Box) (Includes Dual Wheel)	102 in.	Y	32 lbs.	571338	233.00
	13-15	**WSL** Ram Crew Cab 3500 (6.4 ft. Box) (Includes Dual Wheel)	102 in.	Y	26 lbs.	571337	263.00
	10-12	**WSL** Ram Crew Cab 2500, 3500 (6.4 ft. Box) (Also fits 2013 Ram Crew Cab 2500)	102 in.	Y	26 lbs.	571037	263.00
	14-17	Ram Crew Cab 2500 (8 ft. Box)	125 in.	Y	31 lbs.	571438	277.00
	13-17	Ram Crew Cab 3500 (8 ft. Box) (Includes Dual Wheel)	125 in.	Y	32 lbs.	571338	233.00
	13-15	**WSL** Ram Crew Cab 3500 (8 ft. Box) (Includes Dual Wheel)	125 in.	Y	26 lbs.	571337	263.00
	10-12	**WSL** Ram Crew Cab 2500, 3500 (8 ft. Box) (Incl. DW) (Also fits 2013 Ram Crew Cab 2500) (Ex	125 in.	Y	26 lbs.	571037	263.00
	14-17	Ram Mega Cab 2500	114 in.	Y	31 lbs.	571438	277.00
	13-17	Ram Mega Cab 3500	114 in.	Y	32 lbs.	571338	233.00
	13-15	**WSL** Ram Mega Cab 3500	114 in.	Y	26 lbs.	571337	263.00
	10-12	**WSL** Ram Mega Cab 2500, 3500/Ram Mega Cab DW (Also fits 2013 Ram Mega Cab 2500) (E	114 in.	Y	26 lbs.	571037	263.00

Finish	Year	Description	Length	FDX	Weight	Item #	Retail
		O-MEGA II 6" OVAL STEPS - BRACKETS ONLY - WHEEL-TO-WHEEL - Body Mount Installation (GAS OR DIESEL)					
		DODGE/RAM	**BOARDS**				
	09-17	Ram Regular Cab 1500 (6.4 ft. Box)	78 in.	Y	45 lbs.	570939	283.00
	09-17	Ram Regular Cab 1500 (8 ft. Box)	98 in.	Y	45 lbs.	570939	283.00
	14-17	Ram Regular Cab 2500 (8 ft. Box)	98 in.	Y	40 lbs.	571439	286.00
	13-17	Ram Regular Cab 3500 (8 ft. Box)	98 in.	Y	40 lbs.	571339	286.00
	09-17	Ram Quad Cab 1500 (6.4 ft. Box)	98 in.	Y	45 lbs.	570939	283.00
	09-17	Ram Crew Cab 1500 (5.7 ft. Box)	98 in.	Y	45 lbs.	570939	283.00
	09-17	Ram Crew Cab 1500 (6.4 ft. Box)	102 in.	Y	45 lbs.	570939	283.00
	14-17	Ram Crew Cab 2500 (6.4 ft. Box)	102 in.	Y	40 lbs.	571439	286.00
	13-17	Ram Crew Cab 3500 (6.4 ft. Box) (Includes Dual Wheel)	102 in.	Y	40 lbs.	571339	286.00
	14-17	Ram Crew Cab 2500 (8 ft. Box)	125 in.	Y	40 lbs.	571439	286.00
	13-17	Ram Crew Cab 3500 (8 ft. Box) (Includes Dual Wheel)	125 in.	Y	40 lbs.	571339	286.00
	14-17	Ram Mega Cab 2500	114 in.	Y	40 lbs.	571439	286.00
	13-17	Ram Mega Cab 3500	114 in.	Y	40 lbs.	571339	286.00
	02-08	Ram Regular Cab 1500 Short Box (Also fits 03-09 Ram Reg Cab 2500, 3500)	78 in.	Y	39 lbs.	570237	233.00
	02-08	Ram Regular Cab 1500 Long Box	98 in.	Y	39 lbs.	570237	233.00
	03-09	Ram Regular Cab 2500, 3500 Long Box (Includes Dual Wheel)	98 in.	Y	39 lbs.	570237	233.00
	02-08	Ram Quad Cab 1500 Short Box (Also fits 03-09 Ram Quad Cab 2500, 3500)	98 in.	Y	39 lbs.	570237	233.00
	02-08	Ram Quad Cab 1500 Long Box	114 in.	Y	39 lbs.	570237	233.00
	03-09	Ram Quad Cab 2500, 3500 Long Box (Includes Dual Wheel)	114 in.	Y	39 lbs.	570237	233.00
		O-MEGA II 6" OVAL STEPS - BRACKETS ONLY - WHEEL-TO-WHEEL					
		FORD					
	15-17	F-150 Regular Cab (6.5 ft. Box)	78 in.	Y	21 lbs.	571529	164.00
	09-14	F-150 Regular Cab (6.5 ft. Box)	78 in.	Y	21 lbs.	570929	164.00
	15-17	F-150 Regular Cab (8 ft. Box)	98 in.	Y	21 lbs.	571529	164.00
	09-14	F-150 Regular Cab (8 ft. Box)	98 in.	Y	21 lbs.	570929	164.00
	15-17	F-150 Super Cab (5.5 ft. Box)	88 in.	Y	21 lbs.	571529	164.00
	09-14	F-150 Super Cab (5.5 ft. Box)	88 in.	Y	21 lbs.	570929	164.00
	15-17	F-150 Super Cab (6.5 ft. Box)	98 in.	Y	21 lbs.	571529	164.00
	09-14	F-150 Super Cab (6.5 ft. Box)	98 in.	Y	21 lbs.	570929	164.00
	15-17	F-150 Super Cab (8 ft. Box)	114 in.	Y	21 lbs.	571529	164.00
	09-14	F-150 Super Cab (8 ft. Box)	114 in.	Y	21 lbs.	570929	164.00
	15-17	F-150 Super Crew (5.5 ft. Box)	102 in.	Y	21 lbs.	571529	164.00
	09-14	F-150 Super Crew (5.5 ft. Box)	102 in.	Y	21 lbs.	570929	164.00
	15-17	F-150 Super Crew (6.5 ft. Box)	108 in.	Y	21 lbs.	571529	164.00
	09-14	F-150 Super Crew (6.5 ft. Box)	108 in.	Y	21 lbs.	570929	164.00
	2017	F-Series Super Duty Regular Cab (8 ft. Box) (Includes Dual Wheel)	98 in.	Y	22 lbs.	571729	207.00
	08-16	F-Series Super Duty Regular Cab (8 ft. Box) (Includes Dual Wheel)	88 in.	Y	25 lbs.	570829	226.00
	2017	F-Series Super Duty Super Cab (6.75 ft. Box)	98 in.	Y	22 lbs.	571729	207.00
	08-16	F-Series Super Duty Super Cab (6.75 ft. Box)	98 in.	Y	25 lbs.	570829	226.00
	2017	F-Series Super Duty Super Cab (8 ft. Box) (Includes Dual Wheel)	114 in.	Y	22 lbs.	571729	207.00
	08-16	F-Series Super Duty Super Cab (8 ft. Box) (Includes Dual Wheel)	114 in.	Y	25 lbs.	570829	226.00
	2017	F-Series Super Duty Crew Cab (6.75 ft. Box)	114 in.	Y	22 lbs.	571729	207.00
	08-16	F-Series Super Duty Crew Cab (6.75 ft. Box)	114 in.	Y	25 lbs.	570829	226.00
	2017	F-Series Super Duty Crew Cab (8 ft. Box) (Includes Dual Wheel)	125 in.	Y	22 lbs.	571729	207.00
	08-16	F-Series Super Duty Crew Cab (8 ft. Box) (Includes Dual Wheel)	125 in.	Y	25 lbs.	570829	226.00
		TOYOTA					
	07-17	Tundra Regular Cab (6.5 ft. Box)	78 in.	Y	28 lbs.	570757	240.00
	07-17	Tundra Regular Cab (8 ft. Box)	102 in.	Y	28 lbs.	570757	240.00
	07-17	Tundra Double Cab (6.5 ft. Box)	102 in.	Y	28 lbs.	570757	240.00
	07-17	Tundra Double Cab (8 ft. Box)	114 in.	Y	28 lbs.	570757	240.00
	07-17	Tundra CrewMax (5.5 ft. Box)	102 in.	Y	28 lbs.	570757	240.00

Finish	Year	Description	Length	FDX	Weight	Item #	Retail
		O-MEGA II 6" OVAL STEPS - UNIVERSAL STEP BOARDS ONLY					
Silver		54 in. O-Mega II 6" Oval Step - Silver	54 in.	Y	20 lbs.	583054	217.00
Silver		60 in. O-Mega II 6" Oval Step - Silver	60 in.	Y	21 lbs.	583060	233.00
Silver		72 in. O-Mega II 6" Oval Step - Silver	72 in.	Y	26 lbs.	583072	246.00
Silver		78 in. O-Mega II 6" Oval Step - Silver	78 in.	Y	29 lbs.	583078	250.00
Silver		88 in. O-Mega II 6" Oval Step - Silver	88 in.	Y	33 lbs.	583088	274.00
Silver		98 in. O-Mega II 6" Oval Step - Silver	98 in.	Y	36 lbs.	583098	327.00
Silver		102 in. O-Mega II 6" Oval Step - Silver	102 in.	Y	37 lbs.	583102	329.00
Silver		108 in. O-Mega II 6" Oval Step - Silver	108 in.	Y	39 lbs.	583108	333.00
Silver		114 in. O-Mega II 6" Oval Step - Silver	114 in.	N	40 lbs.	583114	361.00
Silver		125 in. O-Mega II 6" Oval Step - Silver	125 in.	N	46 lbs.	583125	407.00
Black		72 in. O-Mega II 6" Oval Step - Black	72 in.	Y	26 lbs.	584072	329.00
Black		78 in. O-Mega II 6" Oval Step - Black	78 in.	Y	29 lbs.	584078	269.00
Black		88 in. O-Mega II 6" Oval Step - Black	88 in.	Y	33 lbs.	584088	299.00
Black		98 in. O-Mega II 6" Oval Step - Black	98 in.	Y	36 lbs.	584098	343.00
Black		102 in. O-Mega II 6" Oval Step - Black	102 in.	Y	37 lbs.	584102	357.00
Black		114 in. O-Mega II 6" Oval Step - Black	114 in.	N	40 lbs.	584114	380.00
Black		125 in. O-Mega II 6" Oval Step - Black	125 in.	N	46 lbs.	584125	450.00
Black		Universal Aluminum Step Pad Kit (2)		Y	5 lbs.	580002	34.00
		GRIP STEP MOUNTING BRACKETS ONLY - Rocker Mount Installation (GAS)					
		CHEVROLET/GMC	**BOARDS**				
	14-17	Silverado/Sierra 1500 Regular Cab	54 in.	Y	15 lbs.	401441	114.00
	07-13	Silverado/Sierra 1500 Regular Cab	54 in.	Y	15 lbs.	400711	114.00
	15-17	Silverado/Sierra 2500HD/3500 Regular Cab	54 in.	Y	15 lbs.	401441	114.00
	07-14	Silverado/Sierra 2500HD/3500 Regular Cab	54 in.	Y	15 lbs.	400711	114.00
	14-17	Silverado/Sierra 1500 Double Cab	78 in.	Y	21 lbs.	401443	157.00
	07-13	Silverado/Sierra 1500 Extended Cab	78 in.	Y	21 lbs.	400713	157.00
	15-17	Silverado/Sierra 2500HD/3500 Double Cab	78 in.	Y	21 lbs.	401443	157.00
	07-14	Silverado/Sierra 2500HD/3500 Extended Cab	78 in.	Y	21 lbs.	400713	157.00
	14-17	Silverado/Sierra 1500 Crew Cab	88 in.	Y	21 lbs.	401443	157.00
	07-13	Silverado/Sierra 1500 Crew Cab	88 in.	Y	21 lbs.	400713	157.00
	15-17	Silverado/Sierra 2500HD/3500 Crew Cab	88 in.	Y	21 lbs.	401443	157.00
	07-14	Silverado/Sierra 2500HD/3500 Crew Cab	88 in.	Y	21 lbs.	400713	157.00
		GRIP STEP MOUNTING BRACKETS ONLY - Body Mount Installation (GAS OR DIESEL)					
		CHEVROLET/GMC					
	99-13	Silverado/Sierra 1500 Regular Cab	54 in.	Y	17 lbs.	401111	129.00
	15-17	Silverado/Sierra 2500HD/3500 Regular Cab	54 in.	Y	17 lbs.	401541	129.00
	01-14	Silverado/Sierra 2500HD/3500 Regular Cab	54 in.	Y	17 lbs.	401111	129.00
	99-13	Silverado/Sierra 1500 Extended Cab	78 in.	Y	28 lbs.	401113	193.00
	15-17	Silverado/Sierra 2500HD/3500 Double Cab	78 in.	Y	28 lbs.	401543	193.00
	01-14	Silverado/Sierra 2500HD/3500 Extended Cab	78 in.	Y	28 lbs.	401113	193.00
	04-13	Silverado/Sierra 1500 Crew Cab	88 in.	Y	28 lbs.	401113	193.00
	15-17	Silverado/Sierra 2500HD/3500 Crew Cab	88 in.	Y	28 lbs.	401543	193.00
	01-14	Silverado/Sierra 2500HD/3500 Crew Cab	88 in.	Y	28 lbs.	401113	193.00
		GRIP STEP MOUNTING BRACKETS ONLY					
		CHEVROLET/GMC					
	07-13	Avalanche	88 in.	Y	21 lbs.	400713	157.00
	07-17	Suburban/Yukon XL	88 in.	Y	21 lbs.	400713	157.00
	07-17	Tahoe/Yukon	78 in.	Y	21 lbs.	400713	157.00
		GRIP STEP MOUNTING BRACKETS ONLY - Rocker Mount Installation (GAS OR DIESEL)					
		DODGE/RAM					
	09-17	Ram Regular Cab 1500	60 in.	Y	15 lbs.	401631	206.00
	09-14	**WSL** Ram Regular Cab 1500	60 in.	Y	12 lbs.	400931	137.00
	10-17	Ram Regular Cab 2500, 3500, 4500, 5500	60 in.	Y	15 lbs.	401631	206.00
	10-15	**WSL** Ram Regular Cab 2500, 3500, 4500, 5500 (4500/5500 Req. Kit #551415 N/C)	60 in.	Y	12 lbs.	400931	137.00
	09-17	Ram Quad Cab 1500	78 in.	Y	21 lbs.	401632	227.00
	09-17	Ram Crew Cab 1500	88 in.	Y	21 lbs.	401632	227.00
	10-17	Ram Crew Cab 2500, 3500	88 in.	Y	21 lbs.	401632	227.00
	10-17	Ram Mega Cab 2500, 3500	98 in.	Y	21 lbs.	401632	227.00
	11-17	Durango	78 in.	Y	23 lbs.	401134	179.00
	11-17	Ram Crew Cab 3500/4500/5500 Chassis Cab	88 in.	Y	16 lbs.	401335	170.00

Finish	Year	Description	Length	FDX	Weight	Item #	Retail
		GRIP STEP MOUNTING BRACKETS ONLY - Body Mount Installation (GAS OR DIESEL)					
		RAM	**BOARDS**				
	09-17	Ram Regular Cab 1500	60 in.	Y	35 lbs.	401031	166.00
	10-17	Ram Regular Cab 2500, 3500, 4500, 5500 (Chassis Cab Requires Accessory Kit #552714 N/C)	60 in.	Y	35 lbs.	401031	166.00
	09-17	Ram Quad Cab 1500	78 in.	Y	40 lbs.	401032	221.00
	09-17	Ram Crew Cab 1500	88 in.	Y	40 lbs.	401032	221.00
	10-17	Ram Crew Cab 2500, 3500 (Chassis Cab Requires Accessory Kit #401300 N/C)	88 in.	Y	40 lbs.	401032	221.00
	10-17	Ram Mega Cab 2500, 3500	98 in.	Y	40 lbs.	401032	221.00
		GRIP STEP MOUNTING BRACKETS ONLY					
		FORD					
	15-17	F-150 Regular Cab	60 in.	Y	20 lbs.	401521	87.00
	04-14	F-150 Regular Cab	60 in.	Y	10 lbs.	400921	87.00
	15-17	F-150 Super Cab	78 in.	Y	35 lbs.	401523	143.00
	04-14	F-150 Super Cab	78 in.	Y	18 lbs.	400922	143.00
	15-17	F-150 Super Crew	88 in.	Y	35 lbs.	401523	143.00
	04-14	F-150 Super Crew (Also fits 05-08 Lincoln Mark LT)	88 in.	Y	18 lbs.	400922	143.00
	2017	F-Series Super Duty Regular Cab	60 in.	Y	20 lbs.	401521	87.00
	99-16	F-Series Super Duty Regular Cab	54 in.	Y	14 lbs.	409921	114.00
	2017	F-Series Super Duty Super Cab	78 in.	Y	35 lbs.	401523	143.00
	99-16	F-Series Super Duty Super Cab	78 in.	Y	18 lbs.	409922	143.00
	2017	F-Series Super Duty Crew Cab	88 in.	Y	35 lbs.	401523	143.00
	99-16	F-Series Super Duty Crew Cab	88 in.	Y	18 lbs.	409922	143.00
	11-17	Explorer (Some Drilling Required)	72 in.	Y	19 lbs.	401124	149.00
		JEEP					
	11-17	Grand Cherokee	72 in.	Y	18 lbs.	401134	179.00
		TOYOTA					
	07-17	Tundra Regular Cab	60 in.	Y	12 lbs.	400751	93.00
	07-17	Tundra Double Cab	78 in.	Y	20 lbs.	400752	157.00
	07-17	Tundra CrewMax	88 in.	Y	20 lbs.	400752	157.00
		NISSAN					
	16-17	Titan XD Crew Cab	88 in.	Y	26 lbs.	401663	143.00
		GRIP STEP MOUNTING BRACKETS ONLY - WHEEL-TO-WHEEL - Rocker Mount Installation (GAS)					
		CHEVROLET/GMC					
	14-17	Silverado/Sierra 1500 Regular Cab (6.5 ft. Box)	78 in.	Y	29 lbs.	401447	234.00
	07-13	Silverado/Sierra 1500 Regular Cab (6.5 ft. Box)	78 in.	Y	26 lbs.	400717	234.00
	14-17	Silverado/Sierra 1500 Regular Cab (8 ft. Box)	88 in.	Y	29 lbs.	401447	234.00
	07-13	Silverado/Sierra 1500 Regular Cab (8 ft. Box)	88 in.	Y	26 lbs.	400717	234.00
	15-17	Silverado/Sierra 2500HD/3500 Regular Cab (8 ft. Box)	88 in.	Y	29 lbs.	401447	234.00
	07-14	Silverado/Sierra 2500HD/3500 Regular Cab (8 ft. Box)	88 in.	Y	26 lbs.	400717	234.00
	07-14	Silverado/Sierra 3500 Regular Cab Dual Wheel	88 in.	Y	26 lbs.	400717	234.00
	14-17	Silverado/Sierra 1500 Double Cab (5.8 ft. Box)	88 in.	Y	29 lbs.	401447	234.00
	14-17	Silverado/Sierra 1500 Double Cab (6.5 ft. Box)	102 in.	Y	29 lbs.	401447	234.00
	07-13	Silverado/Sierra 1500 Extended Cab (6.5 ft. Box)	102 in.	Y	26 lbs.	400717	234.00
	15-17	Silverado/Sierra 2500HD/3500 Double Cab (6.5 ft. Box)	102 in.	Y	29 lbs.	401447	234.00
	07-14	Silverado/Sierra 2500HD/3500 Extended Cab (6.5 ft. Box)	102 in.	Y	26 lbs.	400717	234.00
	15-17	Silverado/Sierra 2500HD/3500 Double Cab (8 ft. Box)	114 in.	Y	29 lbs.	401447	234.00
	07-14	Silverado/Sierra 2500HD/3500 Extended Cab (8 ft. Box)	114 in.	Y	26 lbs.	400717	234.00
	14-17	Silverado/Sierra 1500 Crew Cab (5.8 ft. Box)	102 in.	Y	29 lbs.	401447	234.00
	07-13	Silverado/Sierra 1500 Crew Cab (5.8 ft. Box)	102 in.	Y	26 lbs.	400717	234.00
	14-17	Silverado/Sierra 1500 Crew Cab (6.5 ft. Box)	114 in.	Y	29 lbs.	401447	234.00
	07-13	Silverado/Sierra 2500HD/3500 Crew Cab (6.5 ft. Box)	114 in.	Y	26 lbs.	400717	234.00
	15-17	Silverado/Sierra 1500 Crew Cab (6.5 ft. Box)	114 in.	Y	29 lbs.	401447	234.00
	07-14	Silverado/Sierra 2500HD/3500 Crew Cab (6.5 ft. Box)	114 in.	Y	26 lbs.	400717	234.00
	14-17	Silverado/Sierra 1500 Crew Cab (8 ft. Box)	125 in.	Y	29 lbs.	401447	234.00
	07-13	Silverado/Sierra 1500 Crew Cab (8 ft. Box)	125 in.	Y	26 lbs.	400717	234.00
	15-17	Silverado/Sierra 2500HD/3500 Crew Cab (8 ft. Box)	125 in.	Y	29 lbs.	401447	234.00
	07-14	Silverado/Sierra 2500HD/3500 Crew Cab (8 ft. Box)	125 in.	Y	26 lbs.	400717	234.00

Finish	Year	Description	Length	FDX	Weight	Item #	Retail
		GRIP STEP MOUNTING BRACKETS ONLY - WHEEL-TO-WHEEL - Body Mount Installation (GAS OR DIESEL)					
		CHEVROLET/GMC	**BOARDS**				
	99-13	Silverado/Sierra 1500 Regular Cab (6.5 ft. Box)	78 in.	Y	35 lbs.	401117	250.00
	99-13	Silverado/Sierra 1500 Regular Cab (8 ft. Box)	88 in.	Y	35 lbs.	401117	250.00
	15-17	Silverado/Sierra 2500HD/3500 Regular Cab (8 ft. Box) (Includes Dual Wheel)	88 in.	Y	36 lbs.	401547	250.00
	01-14	Silverado/Sierra 2500HD/3500 Regular Cab (8 ft. Box) (Includes Dual Wheel)	88 in.	Y	35 lbs.	401117	250.00
	99-13	Silverado/Sierra 1500 Extended Cab (6.5 ft. Box)	102 in.	Y	35 lbs.	401117	250.00
	15-17	Silverado/Sierra 2500HD/3500 Double Cab (6.5 ft. Box)	102 in.	Y	36 lbs.	401547	250.00
	01-14	Silverado/Sierra 2500HD/3500 Extended Cab (6.5 ft. Box)	102 in.	Y	35 lbs.	401117	250.00
	15-17	Silverado/Sierra 2500HD/3500 Double Cab (8 ft. Box)	114 in.	Y	36 lbs.	401547	250.00
	01-14	Silverado/Sierra 2500HD/3500 Extended Cab (8 ft. Box)	114 in.	Y	35 lbs.	401117	250.00
	04-13	Silverado/Sierra 1500 Crew Cab (5.8 ft. Box)	102 in.	Y	35 lbs.	401117	250.00
	15-17	Silverado/Sierra 2500HD/3500 Crew Cab (6.5 ft. Box)	114 in.	Y	36 lbs.	401547	250.00
	01-14	Silverado/Sierra 2500HD/3500 Crew Cab (6.5 ft. Box)	114 in.	Y	35 lbs.	401117	250.00
	15-17	Silverado/Sierra 2500HD/3500 Crew Cab (8 ft. Box)	125 in.	Y	36 lbs.	401547	250.00
	01-14	Silverado/Sierra 2500HD/3500 Crew Cab (8 ft. Box)	125 in.	Y	35 lbs.	401117	250.00
		GRIP STEP MOUNTING BRACKETS ONLY - WHEEL-TO-WHEEL - Rocker Mount Installation (GAS OR DIESEL)					
		RAM					
	09-17	Ram Regular Cab 1500 (6.4 ft. Box)	78 in.	Y	31 lbs.	400938	284.00
	09-17	Ram Regular Cab 1500 (8 ft. Box)	98 in.	Y	31 lbs.	400938	284.00
	10-12	**WSL** Ram Regular Cab 2500, 3500 (8 ft. Box) (Includes Dual Wheel) (Also fits 2013 2500) (Exc	98 in.	Y	26 lbs.	401037	236.00
	14-17	Ram Regular Cab 2500 (8 ft. Box)	98 in.	Y	26 lbs.	401438	244.00
	14-15	**WSL** Ram Regular Cab 2500 (8 ft. Box)	98 in.	Y	26 lbs.	401437	227.00
	13-17	Ram Regular Cab 3500 (8 ft. Box) (Includes Dual Wheel)	98 in.	Y	32 lbs.	401338	244.00
	13-15	**WSL** Ram Regular Cab 3500 (8 ft. Box) (Includes Dual Wheel)	98 in.	Y	26 lbs.	401337	227.00
	09-17	Ram Quad Cab 1500 (6.4 ft. Box)	98 in.	Y	31 lbs.	400938	284.00
	09-17	Ram Crew Cab 1500 (5.7 ft. Box)	98 in.	Y	31 lbs.	400938	284.00
	09-17	Ram Crew Cab 1500 (6.4 ft. Box)	102 in.	Y	31 lbs.	400938	284.00
	10-12	**WSL** Ram Crew Cab 2500, 3500 (6.4 ft. Box) (Also fits 2013 2500)	102 in.	Y	26 lbs.	401037	236.00
	14-17	Ram Crew Cab 2500 (6.4 ft. Box)	102 in.	Y	26 lbs.	401438	244.00
	14-15	**WSL** Ram Crew Cab 2500 (6.4 ft. Box)	102 in.	Y	26 lbs.	401437	227.00
	13-17	Ram Crew Cab 3500 (6.4 ft. Box)	102 in.	Y	32 lbs.	401338	244.00
	13-15	**WSL** Ram Crew Cab 3500 (6.4 ft. Box)	102 in.	Y	26 lbs.	401337	227.00
	10-12	**WSL** Ram Crew Cab 2500, 3500 (8 ft. Box) (Includes Dual Wheel) (Also fits 2013 2500) (Excl. 2	125 in.	Y	26 lbs.	401037	236.00
	14-17	Ram Crew Cab 2500 (8 ft. Box)	125 in.	Y	26 lbs.	401438	244.00
	14-15	**WSL** Ram Crew Cab 2500 (8 ft. Box)	125 in.	Y	26 lbs.	401437	227.00
	13-17	Ram Crew Cab 3500 (8 ft. Box) (Includes Dual Wheel)	125 in.	Y	32 lbs.	401338	244.00
	13-15	**WSL** Ram Crew Cab 3500 (8 ft. Box) (Includes Dual Wheel)	125 in.	Y	26 lbs.	401337	227.00
	14-17	Ram Mega Cab 2500 (6.4 ft. Box)	114 in.	Y	26 lbs.	401438	244.00
	14-15	**WSL** Ram Mega Cab 2500 (6.4 ft. Box)	114 in.	Y	26 lbs.	401437	227.00
	13-17	Ram Mega Cab 3500 (6.4 ft. Box)	114 in.	Y	32 lbs.	401338	244.00
	13-15	**WSL** Ram Mega Cab 3500 (6.4 ft. Box)	114 in.	Y	26 lbs.	401337	227.00
	10-12	**WSL** Ram Mega Cab 2500, 3500 and Ram Mega Cab Dual Wheel (Also fits 2013 2500) (Excl.	114 in.	Y	26 lbs.	401037	236.00
		GRIP STEP MOUNTING BRACKETS ONLY - WHEEL-TO-WHEEL - Body Mount Installation (GAS OR DIESEL)					
		RAM					
	09-17	Ram Regular Cab 1500 (6.4 ft. Box)	78 in.	Y	50 lbs.	400939	283.00
	09-17	Ram Regular Cab 1500 (8 ft. Box)	98 in.	Y	50 lbs.	400939	283.00
	14-17	Ram Regular Cab 2500 (8 ft. Box)	98 in.	Y	45 lbs.	401439	279.00
	13-17	Ram Regular Cab 3500 (8 ft. Box) (Includes Dual Wheel)	98 in.	Y	45 lbs.	401339	279.00
	09-17	Ram Quad Cab 1500 (6.4 ft. Box)	98 in.	Y	50 lbs.	400939	283.00
	09-17	Ram Crew Cab 1500 (5.7 ft. Box)	98 in.	Y	50 lbs.	400939	283.00
	09-17	Ram Crew Cab 1500 (6.4 ft. Box)	102 in.	Y	50 lbs.	400939	283.00
	14-17	Ram Crew Cab 2500 (6.4 ft. Box)	102 in.	Y	45 lbs.	401439	279.00
	13-17	Ram Crew Cab 3500 (6.4 ft. Box)	102 in.	Y	45 lbs.	401339	279.00
	14-17	Ram Crew Cab 2500 (8 ft. Box)	125 in.	Y	45 lbs.	401439	279.00
	13-17	Ram Crew Cab 3500 (8 ft. Box) (Includes Dual Wheel)	125 in.	Y	45 lbs.	401339	279.00
	14-17	Ram Mega Cab 2500 (6.4 ft. Box)	114 in.	Y	45 lbs.	401439	279.00
	13-17	Ram Mega Cab 3500 (6.4 ft. Box)	114 in.	Y	45 lbs.	401339	279.00

Finish	Year	Description	Length	FDX	Weight	Item #	Retail
		GRIP STEP MOUNTING BRACKETS ONLY - WHEEL-TO-WHEEL					
		FORD	**BOARDS**				
	15-17	F-150 Regular Cab (6.5 ft. Box)	78 in.	Y	26 lbs.	401529	236.00
	09-14	F-150 Regular Cab (6.5 ft. Box)	78 in.	Y	18 lbs.	400929	234.00
	15-17	F-150 Regular Cab (8 ft. Box)	98 in.	Y	25 lbs.	401529	236.00
	09-14	F-150 Regular Cab (8 ft. Box)	98 in.	Y	18 lbs.	400929	234.00
	15-17	F-150 Super Cab (5.5 ft. Box)	88 in.	Y	25 lbs.	401529	236.00
	09-14	F-150 Super Cab (5.5 ft. Box)	88 in.	Y	18 lbs.	400929	234.00
	15-17	F-150 Super Cab (6.5 ft. Box)	98 in.	Y	25 lbs.	401529	236.00
	09-14	F-150 Super Cab (6.5 ft. Box)	98 in.	Y	18 lbs.	400929	234.00
	15-17	F-150 Super Cab (8 ft. Box)	114 in.	Y	25 lbs.	401529	236.00
	09-14	F-150 Super Cab (8 ft. Box)	114 in.	Y	18 lbs.	400929	234.00
	15-17	F-150 Super Crew (5.5 ft. Box)	102 in.	Y	25 lbs.	401529	236.00
	09-14	F-150 Super Crew (5.5 ft. Box)	102 in.	Y	18 lbs.	400929	234.00
	2017	F-Series Super Duty Regular Cab (8 ft. Box) (Includes Dual Wheel)	98 in.	Y	26 lbs.	401729	236.00
	08-16	F-Series Super Duty Regular Cab (8 ft. Box) (Includes Dual Wheel)	88 in.	Y	25 lbs.	400829	234.00
	2017	F-Series Super Duty Super Cab (6.75 ft. Box)	98 in.	Y	26 lbs.	401729	236.00
	08-16	F-Series Super Duty Super Cab (6.75 ft. Box)	98 in.	Y	25 lbs.	400829	234.00
	2017	F-Series Super Duty Super Cab (8 ft. Box) (Includes Dual Wheel)	114 in.	Y	26 lbs.	401729	236.00
	08-16	F-Series Super Duty Super Cab (8 ft. Box) (Includes Dual Wheel)	114 in.	Y	25 lbs.	400829	234.00
	2017	F-Series Super Duty Crew Cab (6.75 ft. Box)	114 in.	Y	26 lbs.	401729	236.00
	08-16	F-Series Super Duty Crew Cab (6.75 ft. Box)	114 in.	Y	25 lbs.	400829	234.00
	2017	F-Series Super Duty Crew Cab (8 ft. Box) (Includes Dual Wheel)	125 in.	Y	26 lbs.	401729	236.00
	08-16	F-Series Super Duty Crew Cab (8 ft. Box) (Includes Dual Wheel)	125 in.	Y	25 lbs.	400829	234.00
		TOYOTA					
	07-17	Tundra Regular Cab (6.5 ft. Box)	78 in.	Y	29 lbs.	400757	240.00
	07-17	Tundra Regular Cab (8 ft. Box)	102 in.	Y	29 lbs.	400757	240.00
	07-17	Tundra Double Cab (6.5 ft. Box)	102 in.	Y	29 lbs.	400757	240.00
	07-17	Tundra Double Cab (8 ft. Box)	114 in.	Y	29 lbs.	400757	240.00
	07-17	Tundra CrewMax (5.5 ft. Box)	102 in.	Y	29 lbs.	400757	240.00
		GRIP STEP UNIVERSAL STEP BOARDS ONLY					
		54 in. Grip Step	54 in.	Y	20 lbs.	415054	243.00
		60 in. Grip Step	60 in.	Y	22 lbs.	415060	256.00
		72 in. Grip Step	72 in.	Y	29 lbs.	415072	319.00
		78 in. Grip Step	78 in.	Y	32 lbs.	415078	319.00
		88 in. Grip Step	88 in.	Y	35 lbs.	415088	336.00
		98 in. Grip Step	98 in.	Y	34 lbs.	415098	443.00
		102 in. Grip Step	102 in.	Y	34 lbs.	415102	443.00
		114 in. Grip Step	114 in.	N	38 lbs.	415114	443.00
		125 in. Grip Step	125 in.	N	40 lbs.	415125	521.00
		VAN MEGASTEP/O-MEGASTEP BRACKETS ONLY					
		CHEVROLET/GMC					
	03-17	Chevrolet Express/GMC Savana Short/Short	36 in.	Y	26 lbs.	570340	169.00
	03-17	Chevrolet Express/GMC Savana Cut-A-Way Vans	36 in.	Y	28 lbs.	570341	169.00
	03-17	Chevrolet Express/GMC Savana Long/Short - 135"	36 & 98 in.	Y	37 lbs.	570344	221.00
	03-17	Chevrolet Express/GMC Savana Long/Short - 155"	36 & 114 in	Y	35 lbs.	571347	264.00
	03-17	Chevrolet Express GMC Savana Long/Long 135” Wheelbase Van	98 in.	Y	34 lbs.	571345	254.00
	03-17	Chevrolet Express/GMC Savana Long/Long 155” Wheelbase Van	114 in.	Y	47 lbs.	571346	300.00
		FORD					
	15-17	Ford Transit Short/Short	36 in.	Y	16 lbs.	571520	153.00
	15-17	Ford Transit Long/Short	36 & 98 in.	Y	26 lbs.	571524	250.00
	15-17	Ford Transit Long/Long	98 in.	Y	38 lbs.	571525	359.00
	01-14	Ford E-Series Cut-A-Way Vans	36 in.	Y	16 lbs.	570121	140.00
	01-14	Ford E-Series Vans Long/Short	36 & 98 in.	Y	22 lbs.	570124	179.00
	01-14	Ford E-Series Vans Long/Long	98 in.	Y	28 lbs.	570125	261.00
		Ford E-Series Vans with Rear Air Conditioner Requires Additional Bracket Pkg. (570125 & 570126)		Y	13 lbs.	570126	57.00
		RAM					
	14-17	Ram ProMaster Van Short/Short	36 in.	Y	10 lbs.	571471	113.00
	14-17	Ram ProMaster Van Long/Short	36 & 98 in.	Y	18 lbs.	571474	197.00
	14-17	Ram ProMaster Van Long/Long	98 in.	Y	26 lbs.	571475	277.00
	14-17	Ram ProMaster Passenger Side Sliding Door ONLY	54 in.	Y	6 lbs.	571473	64.00

Finish	Year	Description	Length	FDX	Weight	Item #	Retail
		VAN MEGASTEP/O-MEGASTEP BRACKETS ONLY					
		SPRINTER	**BOARDS**				
	07-17	Sprinter Van Cab Only	36 in.	Y	8 lbs.	570741	107.00
	07-17	Sprinter Van Long/Short	36 & 98 in.	Y	13 lbs.	570744	161.00
	07-17	Sprinter Van Long/Long	98 in.	Y	19 lbs.	570745	214.00
		NISSAN					
	11-17	Nissan NV Cab Only	36 in.	Y	9 lbs.	571161	97.00
	11-17	Nissan NV Long/Short	36 & 98 in.	Y	13 lbs.	571164	134.00
		(NOTE: For a Long/Long Application, you will need to order 2 Cab Only Bracket Packages)					
		VAN MEGASTEP UNIVERSAL STEP BOARDS ONLY					
		36 in. MegaStep	36 in.	Y	17 lbs.	575036	321.00
		98 in. MegaStep	98 in.	Y	44 lbs.	575098	550.00
		98 & 36 in. MegaStep (includes 98" and 36" Step Boards)	36 & 98 in.	Y	34 lbs.	575100	479.00
		114 & 36 in. MegaStep (includes 114" and 36" Step Boards)	36 & 114 in	N	36 lbs.	575110	507.00
		114 in. MegaStep	114 in.	N	52 lbs.	575114	621.00
		VAN O-MEGASTEP UNIVERSAL STEP BOARDS ONLY					
Satin		**WSL** 36 in. O-MegaStep	36 in.	Y	14 lbs.	585036	103.00
Satin		**WSL** 98 in. O-MegaStep	98 in.	Y	36 lbs.	585098	241.00
Satin		**WSL** 98 & 36 in. O-MegaStep (includes 98" and 36" Step Boards)	36 & 98 in.	Y	28 lbs.	585100	200.00
Satin		**WSL** 114 in. O-MegaStep	114 in.	N	40 lbs.	585114	290.00
Black		**WSL** 36 in. O-MegaStep	36 in.	Y	14 lbs.	586036	119.00
Black		**WSL** 98 in. O-MegaStep	98 in.	Y	36 lbs.	586098	286.00
Black		**WSL** 114 in. O-MegaStep	114 in.	N	40 lbs.	586114	323.00
		VAN O-MEGA II 6" OVAL STEPS - BRACKETS ONLY					
		CHEVROLET/GMC					
	03-17	Chevrolet Express/GMC Savana Short/Short	36 in.	Y	26 lbs.	570340	169.00
	03-17	Chevrolet Express/GMC Savana Cut-A-Way Vans	36 in.	Y	28 lbs.	570341	169.00
	03-17	Chevrolet Express/GMC Savana Long/Short - 135"	36 & 98 in.	Y	37 lbs.	570344	221.00
	03-17	Chevrolet Express/GMC Savana Long/Short - 155"	36 & 114 in	Y	35 lbs.	571347	264.00
	03-17	Chevrolet Express GMC Savana Long/Long 135” Wheelbase Van	98 in.	Y	34 lbs.	571345	254.00
	03-17	Chevrolet Express/GMC Savana Long/Long 155” Wheelbase Van	114 in.	Y	47 lbs.	571346	300.00
		FORD					
	15-17	Ford Transit Short/Short	36 in.	Y	16 lbs.	571520	153.00
	15-17	Ford Transit Long/Short	36 & 98 in.	Y	26 lbs.	571524	250.00
	15-17	Ford Transit Long/Long	98 in.	Y	38 lbs.	571525	359.00
	01-17	Ford E-Series Cut-A-Way Vans	36 in.	Y	16 lbs.	570121	140.00
	01-14	Ford E-Series Vans Long/Short	36 & 98 in.	Y	22 lbs.	570124	179.00
	01-14	Ford E-Series Vans Long/Long	98 in.	Y	28 lbs.	570125	261.00
		Ford E-Series Vans with Rear Air Conditioner Requires Additional Bracket Pkg. (570125 & 570126)		Y	13 lbs.	570126	57.00
		RAM					
	14-17	Ram ProMaster Van Short/Short	36 in.	Y	10 lbs.	571471	113.00
	14-17	Ram ProMaster Van Long/Short	36 & 98 in.	Y	18 lbs.	571474	197.00
	14-17	Ram ProMaster Van Long/Long	98 in.	Y	26 lbs.	571475	277.00
	14-17	Ram ProMaster Passenger Side Sliding Door ONLY	54 in.	Y	6 lbs.	571473	64.00
		SPRINTER					
	07-17	Sprinter Van Cab Only	36 in.	Y	8 lbs.	570741	107.00
	07-17	Sprinter Van Long/Short	36 & 98 in.	Y	13 lbs.	570744	161.00
	07-17	Sprinter Van Long/Long	98 in.	Y	19 lbs.	570745	214.00
		NISSAN					
	11-17	Nissan NV Cab Only	36 in.	Y	9 lbs.	571161	97.00
	11-17	Nissan NV Long/Short	36 & 98 in.	Y	13 lbs.	571164	134.00
		(NOTE: For a Long/Long Application, you will need to order 2 Cab Only Bracket Packages)					

Finish	Year	Description	Length	FDX	Weight	Item #	Retail
		VAN O-MEGA II 6" OVAL STEPS - UNIVERSAL STEP BOARDS ONLY					
Silver		36 in. O-Mega II 6" Oval Step	36 in.	Y	14 lbs.	583036	160.00
Silver		98 in. O-Mega II 6" Oval Step	98 in.	Y	36 lbs.	583098	327.00
Silver		98 & 36 in. O-Mega II 6" Oval Step (includes 98" and 36" Step Boards)	36 & 98 in.	Y	28 lbs.	583100	257.00
Silver		114 in. O-Mega II 6" Oval Step	114 in.	N	40 lbs.	583114	361.00
Black		36 in. O-Mega II 6" Oval Step	36 in.	Y	14 lbs.	584036	176.00
Black		98 in. O-Mega II 6" Oval Step	98 in.	Y	36 lbs.	584098	343.00
Black		98 & 36 in. O-Mega II 6" Oval Step (includes 98" and 36" Step Boards)	36 & 98 in.	Y	28 lbs.	584100	293.00
Black		114 in. O-Mega II 6" Oval Step	114 in.	N	40 lbs.	584114	380.00
		VAN GRIP STEP MOUNTING BRACKETS ONLY					
		CHEVROLET/GMC	**BOARDS**				
	03-17	Chevrolet Express/GMC Savana Short/Short	36 in.	Y	28 lbs.	400340	204.00
	03-17	Chevrolet Express/GMC Savana Cut-A-Way Vans	36 in.	Y	28 lbs.	400341	230.00
	03-17	Chevrolet Express/GMC Savana Long/Short - 135"	36 & 98 in.	Y	32 lbs.	400344	230.00
	03-17	Chevrolet Express/GMC Savana Long/Short - 155"	36 & 114 in	Y	37 lbs.	401347	260.00
	03-17	Chevrolet Express/GMC Savana Long/Long 135" Wheelbase Van	98 in.	Y	35 lbs.	401345	244.00
	03-17	Chevrolet Express/GMC Savana Long/Long 155" Wheelbase Van	114 in.	Y	47 lbs.	401346	280.00
		FORD					
	15-17	Ford Transit Short/Short	36 in.	Y	17 lbs.	401520	139.00
	15-17	Ford Transit Long/Short	36 & 98 in.	Y	28 lbs.	401524	231.00
	15-17	Ford Transit Long/Long	98 in.	Y	40 lbs.	401525	326.00
	15-17	Ford Transit Passenger Side Sliding Door ONLY	54 in.	Y	13 lbs.	401527	129.00
	01-17	Ford E-Series Cut-A-Way Vans	36 in.	Y	16 lbs.	570121	140.00
	01-14	Ford E-Series Vans Long/Short	36 & 98 in.	Y	22 lbs.	570124	179.00
	01-14	Ford E-Series Vans Long/Long	98 in.	Y	30 lbs.	570125	261.00
		Ford E-Series Vans with Rear Air Conditioner Requires Additional Bracket Pkg. (570125 & 570126)		Y	13 lbs.	570126	57.00
		RAM					
	14-17	Ram ProMaster Van Short/Short	36 in.	Y	12 lbs.	401471	116.00
	14-17	Ram ProMaster Van Long/Short	36 & 98 in.	Y	21 lbs.	401474	206.00
	14-17	Ram ProMaster Van Long/Long	98 in.	Y	30 lbs.	401475	290.00
	14-17	Ram ProMaster Van Passenger Side Sliding Door ONLY	54 in.	Y	7 lbs.	401473	64.00
		SPRINTER					
	07-17	Sprinter Van Cab Only	36 in.	Y	10 lbs.	400741	121.00
	07-17	Sprinter Van Long/Short	36 & 98 in.	Y	17 lbs.	400744	171.00
	07-17	Sprinter Van Long/Long	98 in.	Y	19 lbs.	400745	221.00
	ALL	Sprinter Right Hand Grip Step Extension Kit		Y	6 lbs.	401000	57.00
		NISSAN					
	11-17	Nissan NV Cab Only	36 in.	Y	11 lbs.	401161	97.00
	11-17	Nissan NV Long/Short	36 & 98 in.	Y	15 lbs.	401164	134.00
		(NOTE: For a Long/Long Application, you will need to order 2 Cab Only Bracket Packages)					
		VAN GRIP STEP UNIVERSAL STEP BOARDS ONLY					
		36 in. Van Grip Steps	36 in.	Y	14 lbs.	415036	211.00
		54 in. Van Grip Step (Single Board Application)	54 in.	Y	10 lbs.	415254	139.00
		98 & 36 in. Van Grip Steps	36 & 98 in.	Y	25 lbs.	415100	307.00
		98 in. Van Grip Step	98 in.	Y	34 lbs.	415098	443.00
		114 & 36 in. Van Grip Steps	114 & 36 in	N	26 lbs.	415110	321.00
		114 in. Van Grip Step	114 in.	N	38 lbs.	415114	443.00

Finish	Year	Description	Length	FDX	Weight	Item #	Retail
		REAR VAN STEPS (May Impact the Function of Back Sensors if Equipped)					
		RAM PROMASTER REAR STEPS	**BOARDS**				
	14-17	Ram ProMaster Van Rear MegaStep Bracket Package ONLY	54 in.	Y	10 lbs.	571478	100.00
	14-17	Ram ProMaster Van Rear 54" MegaStep ONLY		Y	14 lbs.	575254	256.00
	14-17	Ram ProMaster Van Rear O-MegaStep Bracket Package ONLY	54 in.	Y	10 lbs.	571478	100.00
Satin	14-17	Ram ProMaster Van Rear 54" Satin O-MegaStep ONLY		Y	10 lbs.	585254	150.00
Black	14-17	Ram ProMaster Van Rear 54" Black O-MegaStep ONLY		Y	10 lbs.	586254	143.00
Black	14-17	Ram ProMaster Van Rear 54" Black O-Mega II 6" Oval Step ONLY		Y	10 lbs.	584254	143.00
	14-17	Ram ProMaster Van Rear Grip Step Bracket Package ONLY		Y	15 lbs.	401478	117.00
	14-17	Ram ProMaster Van Rear 54" Grip Step Board ONLY		Y	10 lbs.	415254	139.00
		FORD TRANSIT REAR STEPS					
	15-17	Ford Transit Rear MegaStep Bracket Package ONLY	54 in.	Y	20 lbs.	571528	129.00
	15-17	Ford Transit Rear 54" MegaStep ONLY		Y	14 lbs.	575254	256.00
	15-17	Ford Transit Rear O-MegaStep Bracket Package ONLY	54 in.	Y	20 lbs.	571528	129.00
Satin	15-17	Ford Transit Rear 54" Satin O-MegaStep ONLY		Y	10 lbs.	585254	150.00
Black	15-17	Ford Transit Van Rear 54" Black O-MegaStep ONLY		Y	10 lbs.	586254	143.00
Black	15-17	Ford Transit Van Rear 54" Black O-Mega II 6" Oval Step ONLY		Y	10 lbs.	584254	143.00
	15-17	Ford Transit Rear Grip Step Bracket Package ONLY	54 in.	Y	20 lbs.	571528	129.00
	15-17	Ford Transit Rear 54" Grip Step Board ONLY		Y	10 lbs.	415254	139.00
		SPRINTER REAR STEPS					
	07-17	Sprinter Rear MegaStep Bracket Package ONLY (Excludes 14-16 w/Factory Receiver Hitch)	54 in.	Y	15 lbs.	570748	86.00
	07-17	Sprinter Rear 54" MegaStep ONLY		Y	14 lbs.	575254	256.00
Satin	07-15	**WSL** Sprinter Rear Satin O-MegaStep and Bracket Package (54" Step) (Excl. 14-15 w/Factory I	54 in.	Y	25 lbs.	585740	216.00
Black	07-15	**WSL** Sprinter Rear Black O-MegaStep and Bracket Package (54" Step) (Excl. 14-15 w/Factory	54 in.	Y	25 lbs.	586740	229.00
	07-17	Sprinter Rear O-MegaStep Bracket Package ONLY (Excludes 14+ w/Factory Receiver Hitch)	54 in.	Y	15 lbs.	570748	86.00
Satin	07-17	Sprinter Rear 54" Satin O-MegaStep ONLY	54 in.	Y	10 lbs.	585254	150.00
Black	07-17	Sprinter Rear 54" Black O-MegaStep ONLY	54 in.	Y	10 lbs.	586254	143.00
Black	07-17	Sprinter Rear 54" Black O-Mega II 6" Oval Step ONLY	54 in.	Y	10 lbs.	584254	143.00
	07-17	Sprinter Rear Grip Step Bracket Package ONLY (Excludes 14+ w/Factory Receiver Hitch)	54 in.	Y	15 lbs.	570748	86.00
	07-17	Sprinter Rear 54" Grip Step Board ONLY	54 in.	Y	10 lbs.	415254	139.00
		DEFENDER SERIES HD REPLACEMENT					
		CHEVROLET/GMC					
Black	07-10	**WSL** Chevrolet Silverado 2500HD/3500		N	312 lbs.	180712	######
		WINCH MOUNTING KIT (Winch Not Included)					
		WSL Warn 16.5 Ti, M15000 and M12000; Ramsey Patriot 15000		Y	5 lbs.	180100	43.00
		CAB GUARD					
Black		Universal Assembly w/Top Center Bar for Full-Size, Current Model Pickups (Requires Bracket Package)		Y	34 lbs.	590230	194.00
Black		Cab Guard Mounting Bracket Package (without tool box)		Y	8 lbs.	590235	79.00
Black		Utility Light Brackets - Round (Sold as Pairs)		Y	8 lbs.	590201	61.00
Black		Utility Light Bracket - Rectangular (Sold as Pairs)		Y	10 lbs.	590202	61.00
Black		Tool Box Mounting Bracket Package (mounts Cab Guard with tool box)		Y	11 lbs.	590236	99.00

Finish	Year	Description	FDX	Weight	Item #	Retail
		GRILLE GUARDS LIGHT BRACKET				
	ALL	2” Tubular Grille Guards	Y	2 lbs.	390100	50.00
		GRILLE GUARDS - 2"				
		CHEVROLET/GMC - Sensor Relocation Kit Necessary for Trucks with Sensors				
Black	14-17	Chevrolet Silverado/GMC Sierra 1500 - One-Piece Ring Assembly ONLY	Y	42 lbs.	341443	269.00
Black	14-17	Chevrolet Silverado/GMC Sierra 1500 - Upright Package ONLY	Y	51 lbs.	341610	356.00
Black	15-17	Chevrolet Silverado/GMC Sierra 2500HD/3500 - One-Piece Ring Assembly ONLY	Y	42 lbs.	341443	269.00
Black	15-17	Chevrolet Silverado/GMC Sierra 2500HD/3500 - Upright Package ONLY	Y	63 lbs.	341512	350.00
Black	11-14	Chevrolet Silverado/GMC Sierra 2500HD/3500 - One-Piece Ring Assembly ONLY	Y	41 lbs.	340713	264.00
Black	11-14	Chevrolet Silverado/GMC Sierra 2500HD/3500 - Upright Package ONLY	Y	56 lbs.	341112	343.00
Black	07-10	Chevrolet Silverado/GMC Sierra 2500HD/3500 - One-Piece Ring Assembly ONLY	Y	41 lbs.	340713	264.00
Black	07-10	Chevrolet Silverado/GMC Sierra 2500HD/3500 - Upright Package ONLY	Y	51 lbs.	340712	343.00
Black	15-17	Chevrolet Tahoe/Suburban 1500 - One-Piece Ring Assembly ONLY (Excludes Adaptive Cruise Control)	Y	45 lbs.	341519	264.00
Black	15-17	Chevrolet Tahoe/Suburban 1500 - Upright Package ONLY (Front-End Bumper Modification Required)	Y	58 lbs.	341514	350.00
Black	07-14	Chevrolet Tahoe/Suburban/Avalanche - One-Piece Ring Assembly ONLY	Y	41 lbs.	340719	257.00
Black	07-14	(Excludes 10-13 Tahoe Hybrid) - Upright Package ONLY	Y	45 lbs.	340714	343.00
Black	15-17	GMC Yukon/Yukon XL - One-Piece Ring Assembly ONLY (Excludes Adaptive Cruise Control)	Y	45 lbs.	341519	264.00
Black	15-17	GMC Yukon/Yukon XL - Upright Package ONLY (Front-End Bumper Modification Required)	Y	58 lbs.	341544	350.00
Black	07-14	GMC Yukon/Yukon XL (Excludes 10-13 Yukon Hybrid) - One-Piece Ring Assembly ONLY	Y	41 lbs.	340719	257.00
Black	07-14	Minor Air Dam Modification Required - Upright Package ONLY	Y	45 lbs.	340714	343.00
Black	07-14	Chevrolet Suburban/GMC Yukon XL 2500 - One-Piece Ring Assembly ONLY	Y	41 lbs.	340719	257.00
Black	07-14	Chevrolet Suburban/GMC Yukon XL 2500 - Upright Package ONLY	Y	49 lbs.	340715	350.00
Chrome	14-17	Chevrolet Silverado/GMC Sierra 1500 - One-Piece Ring Assembly ONLY	Y	42 lbs.	331443	417.00
Chrome	14-17	Chevrolet Silverado/GMC Sierra 1500 - Upright Package ONLY	Y	51 lbs.	331610	429.00
Chrome	14-15	Chevrolet Silverado/GMC Sierra 1500 - One-Piece Ring Assembly ONLY	Y	42 lbs.	331443	417.00
Chrome	14-15	Chevrolet Silverado/GMC Sierra 1500 - Upright Package ONLY (Front Frame Reinforcement Compatible)	Y	47 lbs.	331441	393.00
Chrome	14-15	Chevrolet Silverado/GMC Sierra 1500 - One-Piece Ring Assembly ONLY	Y	42 lbs.	331443	417.00
Chrome	14-15	**WSL** Chevrolet Silverado/GMC Sierra 1500 - Upright Package ONLY	Y	51 lbs.	331440	440.00
Chrome	07-13	Chevrolet Silverado/GMC Sierra 1500 - One-Piece Ring Assembly ONLY	Y	41 lbs.	330713	393.00
Chrome	07-13	Chevrolet Silverado/GMC Sierra 1500 - Upright Package ONLY	Y	47 lbs.	330710	393.00
Chrome	15-17	Chevrolet Silverado/GMC Sierra 2500HD/3500 - One-Piece Ring Assembly ONLY	Y	42 lbs.	331443	417.00
Chrome	15-17	Chevrolet Silverado/GMC Sierra 2500HD/3500 - Upright Package ONLY	Y	63 lbs.	331512	407.00
Chrome	11-14	Chevrolet Silverado/GMC Sierra 2500HD/3500 - One-Piece Ring Assembly ONLY	Y	41 lbs.	330713	393.00
Chrome	11-14	Chevrolet Silverado/GMC Sierra 2500HD/3500 - Upright Package ONLY	Y	56 lbs.	331112	403.00
Chrome	07-10	Chevrolet Silverado/GMC Sierra 2500HD/3500 - One-Piece Ring Assembly ONLY	Y	43 lbs.	330713	393.00
Chrome	07-10	Chevrolet Silverado/GMC Sierra 2500HD/3500 - Upright Package ONLY	Y	51 lbs.	330712	400.00
Chrome	15-17	Chevrolet Tahoe/Suburban 1500 - One-Piece Ring Assembly ONLY (Excludes Adaptive Cruise Control)	Y	45 lbs.	331519	409.00
Chrome	15-17	Chevrolet Tahoe/Suburban 1500 - Upright Package ONLY (Front-End Bumper Modification Required)	Y	58 lbs.	331514	421.00
Chrome	07-14	Chevrolet Tahoe/Suburban/Avalanche - One-Piece Ring Assembly ONLY	Y	41 lbs.	330719	391.00
Chrome	07-14	(Excludes 10-13 Tahoe Hybrid) - Upright Package ONLY)	Y	45 lbs.	330714	400.00
Chrome	15-17	GMC Yukon/Yukon XL - One-Piece Ring Assembly ONLY (Excludes Adaptive Cruise Control)	Y	45 lbs.	331519	409.00
Chrome	15-17	GMC Yukon/Yukon XL - Upright Package ONLY (Front-End Bumper Modification Required)	Y	58 lbs.	331544	421.00
Chrome	07-14	GMC Yukon/Yukon XL - One-Piece Ring Assembly ONLY	Y	41 lbs.	330719	391.00
Chrome	07-14	Minor Air Dam Modification Required (Excludes 10-13 Yukon Hybrid) - Upright Package ONLY	Y	45 lbs.	330714	400.00
Chrome	07-14	Chevrolet Suburban/GMC Yukon XL 2500 - One-Piece Ring Assembly ONLY	Y	41 lbs.	330719	391.00
Chrome	07-14	Chevrolet Suburban/GMC Yukon XL 2500 - Upright Package ONLY	Y	49 lbs.	330715	409.00
Chrome	03-07	Chevrolet Silverado 2500HD/3500 (Classic Body Style)	Y	77 lbs.	330312	730.00
	14-17	Chevrolet Silverado/GMC Sierra 1500/2500HD/3500 Parking Sensor Relocation Kit	Y	2 lbs.	390200	133.00
		GRILLE GUARDS - 1-1/4"				
		CHEVROLET/GMC				
Black	07-13	**WSL** Chevrolet Silverado/GMC Sierra 1500 - One-Piece Ring Assembly ONLY	Y	35 lbs.	340718	250.00
Black	07-13	**WSL** Chevrolet Silverado/GMC Sierra 1500 - Upright Package ONLY	Y	47 lbs.	340716	314.00
Black	07-10	**WSL** Chevrolet Silverado/GMC Sierra 2500HD/3500 - One-Piece Ring Assembly ONLY	Y	33 lbs.	340718	250.00
Black	07-10	**WSL** Chevrolet Silverado/GMC Sierra 2500HD/3500 - Upright Package ONLY	Y	51 lbs.	340717	347.00
Black	15-17	Chevrolet Colorado/GMC Canyon - One-Piece Ring Assembly ONLY	Y	32 lbs.	341513	250.00
Black	15-17	Chevrolet Colorado/GMC Canyon - Upright Package ONLY	Y	55 lbs.	341510	357.00
Chrome	07-13	**WSL** Chevrolet Silverado/GMC Sierra 1500 - One-Piece Ring Assembly ONLY	Y	35 lbs.	330718	374.00
Chrome	07-13	**WSL** Chevrolet Silverado/GMC Sierra 1500 - Upright Package ONLY	Y	47 lbs.	330716	364.00
Chrome	07-10	**WSL** Chevrolet Silverado/GMC Sierra 2500HD/3500 - One-Piece Ring Assembly ONLY	Y	33 lbs.	330718	374.00
Chrome	07-10	**WSL** Chevrolet Silverado/GMC Sierra 2500HD/3500 - Upright Package ONLY	Y	51 lbs.	330717	393.00
Chrome	03-07	Chevrolet Silverado 1500, 1500HD, 2500 (Classic Body) (Excl. 1500HD, 2500 without tow hooks)	Y	58 lbs.	201720	627.00
Chrome	03-07	Chevrolet Silverado 2500HD/3500 (Classic Body Style) (Will not work without tow hooks)	Y	60 lbs.	201745	650.00
Chrome	03-06	Chevrolet Avalanche 1500 without Body Hardware	Y	58 lbs.	201720	627.00
Chrome	03-07	GMC Sierra 1500, 1500HD, 2500 (Classic Body Style) (Excl. 1500HD, 2500 without tow hooks)	Y	59 lbs.	201778	600.00
Chrome	15-17	Chevrolet Colorado/GMC Canyon - One-Piece Ring Assembly ONLY	Y	32 lbs.	331513	371.00
Chrome	15-17	Chevrolet Colorado/GMC Canyon - Upright Package ONLY	Y	55 lbs.	331510	407.00

Finish	Year	Description		FDX	Weight	Item #	Retail
		GRILLE GUARDS - TUBULAR WRAPAROUND					
		CHEVROLET/GMC					
Chrome	99-02	Chevrolet Silverado 1500, 1500HD, 2500		Y	47 lbs.	201275	604.00
Chrome	88-98	1500 C/K		Y	58 lbs.	200827	579.00
Chrome	88-00	2500, 3500 C/K		Y	58 lbs.	200827	579.00
Chrome	00-06	Chevrolet Suburban/Tahoe		Y	47 lbs.	201275	604.00
Chrome	92-99	Suburban/Tahoe/Yukon		Y	58 lbs.	200827	579.00
		GRILLE GUARDS - 1-1/4"					
		HUMMER					
Chrome	06-09	**WSL** H3		Y	50 lbs.	330670	629.00
		GRILLE GUARDS - 2"					
		FORD					
Black	2017	Super Duty F-250, F-350, F-450, F-550 - One-Piece Ring Assembly ONLY		Y	49 lbs.	341723	300.00
Black	2017	Super Duty F-250, F-350, F-450, F-550 - Upright Package ONLY		Y	51 lbs.	341722	320.00
Black	11-16	Super Duty F-250, F-350, F-450, F-550 - One-Piece Ring Assembly ONLY		Y	49 lbs.	341123	286.00
Black	11-16	Super Duty F-250, F-350, F-450, F-550 - Upright Package ONLY		Y	45 lbs.	341120	314.00
Black	08-10	Super Duty F-250, F-350, F-450, F-550 - One-Piece Ring Assembly ONLY		Y	38 lbs.	340823	271.00
Black	08-10	Super Duty F-250, F-350, F-450, F-550 - Upright Package ONLY		Y	44 lbs.	340820	307.00
Chrome	2017	Super Duty F-250, F-350, F-450, F-550 - One-Piece Ring Assembly ONLY		Y	49 lbs.	331723	421.00
Chrome	2017	Super Duty F-250, F-350, F-450, F-550 - Upright Package ONLY		Y	51 lbs.	331722	407.00
Chrome	11-16	Super Duty F-250, F-350, F-450, F-550 - One-Piece Ring Assembly ONLY		Y	49 lbs.	331123	407.00
Chrome	11-16	Super Duty F-250, F-350, F-450, F-550 - Upright Package ONLY		Y	45 lbs.	331120	397.00
Chrome	08-10	Super Duty F-250, F-350, F-450, F-550 - One-Piece Ring Assembly ONLY		Y	38 lbs.	330823	386.00
Chrome	08-10	Super Duty F-250, F-350, F-450, F-550 - Upright Package ONLY		Y	44 lbs.	330820	364.00
Chrome	05-07	Super Duty F-250, F-350, F-450, F-550, Excursion		Y	79 lbs.	330520	664.00
Black	15-17	F-150 Models - One-Piece Ring Assembly ONLY (Will affect camera view where applicable)		Y	47 lbs.	341523	300.00
Black	15-17	F-150 Models (2wd Requires Brkt Kit 202450-$30) - Upright Package ONLY		Y	64 lbs.	341520	320.00
Black	09-14	F-150 Models (See Notes 1 & 2) (Excludes Harley Davidson Model) - One-Piece Ring Assembly ONLY		Y	47 lbs.	340923	277.00
Black	09-14	F-150 Models (2wd Requires Brkt Kit 202450-$30) - Upright Package ONLY		Y	54 lbs.	340920	314.00
Chrome	15-17	F-150 Models - One-Piece Ring Assembly ONLY (Will affect camera view where applicable)		Y	47 lbs.	331523	414.00
Chrome	15-17	F-150 Models (2wd Requires Brkt Kit 202450-$30) - Upright Package ONLY		Y	64 lbs.	331520	404.00
Chrome	09-14	F-150 Models (See Notes 1 & 2) (Excludes Harley Davidson Model) - One-Piece Ring Assembly ONLY		Y	47 lbs.	330923	386.00
Chrome	09-14	F-150 Models (2wd Requires Brkt Kit 202450-$30) - Upright Package ONLY		Y	54 lbs.	330920	393.00
	Notes:	(1) 11-14 F-150 EcoBoost Requires Kit #391120 - $65					
		(2) Air Dam Modification Required on 2wd Models					
		GRILLE GUARDS - 1-1/4"					
		FORD					
Chrome	06-08	**WSL** F-150 Models (Will not work without tow hooks)		Y	73 lbs.	330620	740.00
		GRILLE GUARDS - TUBULAR WRAPAROUND					
		FORD					
Chrome	99-04	**WSL** Super Duty F-Series (Also fits 00-04 Excursion)		Y	62 lbs.	201192	629.00
		GRILLE GUARDS - 2"					
		DODGE/RAM					
Black	09-17	Ram 1500 w/Tow Hooks (Excl Laramie Ltd, Express, Blk Ram Express & Sport) - One-Piece Ring Assemb		Y	47 lbs.	340934	303.00
Black	09-17	Ram 1500 w/Tow Hooks - Upright Package ONLY (May interfere with parking sensors)		Y	60 lbs.	340931	364.00
Black	10-17	Ram 2500, 3500 - One-Piece Ring Assembly ONLY		Y	47 lbs.	202197	321.00
Black	10-17	Ram 2500, 3500 - Upright Package ONLY (May interfere with parking sensors)		Y	55 lbs.	341332	371.00
Black	11-17	Ram 4500, 5500 Chassis Cab - One-Piece Ring Assembly ONLY		Y	47 lbs.	202197	321.00
Black	11-17	Ram 4500, 5500 Chassis Cab - Upright Package ONLY		Y	55 lbs.	341334	400.00
Black	11-12	Ram 4500/5500 Chassis Cab - One-Piece Ring Assembly ONLY		Y	47 lbs.	202197	321.00
Black	11-12	Ram 4500/5500 Chassis Cab - Upright Package ONLY		Y	61 lbs.	341134	394.00

Finish	Year	Description	FDX	Weight	Item #	Retail
		GRILLE GUARDS - 2"				
		DODGE/RAM				
Chrome	09-17	Ram 1500 w/Tow Hooks (Excl Laramie Ltd, Express, Blk Ram Express & Sport) - One-Piece Ring Assemb	Y	47 lbs.	330934	441.00
Chrome	09-17	Ram 1500 w/Tow Hooks - Upright Package ONLY (May interfere with parking sensors)	Y	60 lbs.	330931	473.00
Chrome	09-13	**WSL** Ram 1500 (Excludes Laramie Ltd, Express, Blk Ram Express and Sport) - One-Piece Ring Assembly	Y	47 lbs.	330933	464.00
Chrome	09-13	**WSL** Ram 1500 (Requires tow hook removal) - Upright Package ONLY	Y	42 lbs.	330930	421.00
Chrome	10-17	Ram 2500, 3500 - One-Piece Ring Assembly ONLY	Y	47 lbs.	202175	443.00
Chrome	10-17	Ram 2500, 3500 - Upright Package ONLY (May interfere with parking sensors)	Y	55 lbs.	331332	457.00
Chrome	11-17	Ram 4500, 5500 Chassis Cab - One-Piece Ring Assembly ONLY	Y	47 lbs.	202175	443.00
Chrome	11-17	Ram 4500, 5500 Chassis Cab - Upright Package ONLY	Y	55 lbs.	331334	500.00
Chrome	06-09	Ram 2500, 3500 - One-Piece Ring Assembly ONLY	Y	47 lbs.	202175	443.00
Chrome	06-09	Ram 2500, 3500 - Upright Package ONLY	Y	45 lbs.	202176	430.00
Chrome	06-08	Ram 1500 Mega Cab - One-Piece Ring Assembly ONLY	Y	47 lbs.	202175	443.00
Chrome	06-08	Ram 1500 Mega Cab - Upright Package ONLY	Y	45 lbs.	202176	430.00
		TOYOTA				
Black	14-17	Tundra - One-Piece Ring Assembly ONLY	Y	44 lbs.	341453	273.00
Black	14-17	Tundra - Upright Package ONLY	Y	53 lbs.	341450	416.00
Chrome	14-17	Tundra - One-Piece Ring Assembly ONLY	Y	44 lbs.	331453	417.00
Chrome	14-17	Tundra - Upright Package ONLY	Y	53 lbs.	331450	493.00
		NISSAN				
Chrome	04-13	**WSL** Titan (Excludes XE Models) (Skid plate must be removed and is not reused on off-road option)	Y	82 lbs.	330460	779.00
		PROWLER MAX GRILLE GUARD				
		CHEVROLET/GMC - Two Sensor Relocation Kits Necessary for Trucks with Sensors				
		RING ASSEMBLY AND BRACKET PACKAGE REQUIRED FOR COMPLETE GUARD				
Black	16-17	Chevrolet Silverado 1500 (Ring/Upright Assembly ONLY)	N	110 lbs.	320713	600.00
Black	16-17	Chevrolet Silverado 1500 (Bracket Package ONLY)	Y	27 lbs.	321610	143.00
Black	16-17	GMC Sierra 1500 (Ring/Upright Assembly ONLY)	N	110 lbs.	320713	600.00
Black	16-17	GMC Sierra 1500 (Bracket Package ONLY)	Y	27 lbs.	321640	157.00
Black	14-15	Chevrolet Silverado/GMC Sierra 1500 (Ring/Upright Assembly ONLY)	N	110 lbs.	320713	600.00
Black	14-15	Chevrolet Silverado/GMC Sierra 1500 (Bracket Package ONLY) (Front Frame Reinforcement Compatible)	Y	27 lbs.	321411	129.00
Black	14-15	Chevrolet Silverado/GMC Sierra 1500 (Ring/Upright Assembly ONLY)	N	110 lbs.	320713	600.00
Black	14-15	Chevrolet Silverado/GMC Sierra 1500 (Bracket Package ONLY)	Y	23 lbs.	321410	129.00
Black	07-13	Chevrolet Silverado/GMC Sierra 1500 (Ring/Upright Assembly ONLY)	N	110 lbs.	320713	600.00
Black	07-13	Chevrolet Silverado/GMC Sierra 1500 (Bracket Package ONLY)	Y	23 lbs.	320710	129.00
Black	15-17	Chevrolet Silverado 2500HD/3500 (Ring/Upright Assembly ONLY)	N	110 lbs.	320713	600.00
Black	15-17	Chevrolet Silverado 2500HD/3500 (Bracket Package ONLY)	Y	26 lbs.	321512	129.00
Black	15-17	GMC Sierra 2500HD/3500 (Ring/Upright Assembly ONLY)	N	110 lbs.	320713	600.00
Black	15-17	GMC Sierra 2500HD/3500 (Bracket Package ONLY)	Y	26 lbs.	321542	143.00
Black	11-14	Chevrolet Silverado/GMC Sierra 2500HD/3500 (Ring/Upright Assembly ONLY)	N	110 lbs.	320713	600.00
Black	11-14	Chevrolet Silverado/GMC Sierra 2500HD/3500 (Bracket Package ONLY)	Y	26 lbs.	321112	129.00
SST	16-17	Chevrolet Silverado/GMC Sierra 1500 (Ring/Upright Assembly ONLY)	N	98 lbs.	310713	######
Black	16-17	Chevrolet Silverado/GMC Sierra 1500 (Bracket Package ONLY)	Y	27 lbs.	321610	143.00
SST	16-17	GMC Sierra 1500 (Ring/Upright Assembly ONLY)	N	98 lbs.	310713	######
Black	16-17	GMC Sierra 1500 (Bracket Package ONLY)	Y	27 lbs.	321640	157.00
SST	14-15	Chevrolet Silverado/GMC Sierra 1500 (Ring/Upright Assembly ONLY)	N	98 lbs.	310713	######
Black	14-15	Chevrolet Silverado/GMC Sierra 1500 (Bracket Package ONLY) (Front Frame Reinforcement Compatible)	Y	27 lbs.	321411	129.00
SST	14-15	Chevrolet Silverado/GMC Sierra 1500 (Ring/Upright Assembly ONLY)	N	98 lbs.	310713	######
Black	14-15	Chevrolet Silverado/GMC Sierra 1500 (Bracket Package ONLY)	Y	23 lbs.	321410	129.00
SST	07-13	Chevrolet Silverado/GMC Sierra 1500 (Ring/Upright Assembly ONLY)	N	98 lbs.	310713	######
Black	07-13	Chevrolet Silverado/GMC Sierra 1500 (Bracket Package ONLY)	Y	23 lbs.	320710	107.00
SST	15-17	Chevrolet Silverado/GMC Sierra 2500HD/3500 (Ring/Upright Assembly ONLY)	N	98 lbs.	310713	######
Black	15-17	Chevrolet Silverado/GMC Sierra 2500/3500 (Bracket Package ONLY)	Y	26 lbs.	321512	129.00
SST	15-17	GMC Sierra 2500HD/3500 (Ring/Upright Assembly ONLY)	N	98 lbs.	310713	######
Black	15-17	GMC Sierra 2500HD/3500 (Bracket Package ONLY)	Y	26 lbs.	321542	143.00
SST	11-14	Chevrolet Silverado/GMC Sierra 2500HD/3500 (Ring/Upright Assembly ONLY)	N	98 lbs.	310713	######
Black	11-14	Chevrolet Silverado/GMC Sierra 2500HD/3500 (Bracket Package ONLY)	Y	26 lbs.	321112	129.00
	ALL	GM Prowler Max Grille Guard Sensor Relocation Kit	Y	4 lbs.	390210	133.00

Finish	Year	Description	FDX	Weight	Item #	Retail
		PROWLER MAX GRILLE GUARD				
		RAM				
		RING ASSEMBLY AND BRACKET PACKAGE REQUIRED FOR COMPLETE GUARD				
Black	09-17	Ram 1500 (Ring/Upright Assembly ONLY) (Will interfere with parking sensors)	N	120 lbs.	320933	657.00
Black	09-17	Ram 1500 (Bracket Package ONLY) (Excludes Laramie Ltd, Express, Black Ram Express and Sport)	Y	47 lbs.	320930	164.00
Black	10-17	Ram 2500, 3500 (Ring/Upright Assembly ONLY)	Y	114 lbs.	321033	600.00
Black	10-17	Ram 2500, 3500 (Bracket Package ONLY) (Will interfere with parking sensors)	Y	24 lbs.	321332	129.00
Black	11-17	Ram 4500, 5500 Chassis Cab (Ring/Upright Assembly ONLY)	Y	114 lbs.	321033	600.00
Black	11-17	Ram 4500, 5500 Chassis Cab (Bracket Package ONLY)	Y	27 lbs.	321334	143.00
SST	09-17	Ram 1500 (Ring/Upright Assembly ONLY) (Will interfere with parking sensors)	N	90 lbs.	310933	######
Black	09-17	Ram 1500 (Bracket Package ONLY) (Excludes Laramie Ltd, Express, Black Ram Express and Sport)	Y	47 lbs.	320930	164.00
SST	10-17	Ram 2500, 3500 (Ring/Upright Assembly ONLY)	Y	90 lbs.	311033	######
Black	10-17	Ram 2500, 3500 (Bracket Package ONLY)	Y	24 lbs.	321332	129.00
SST	11-17	Ram 4500, 5500 Chassis Cab (Ring/Upright Assembly ONLY)	Y	90 lbs.	311033	######
Black	11-17	Ram 4500, 5500 Chassis Cab (Bracket Package ONLY)	Y	27 lbs.	321334	143.00
		FORD				
		RING ASSEMBLY AND BRACKET PACKAGE REQUIRED FOR COMPLETE GUARD				
Black	15-17	F-150 (Ring/Upright Assembly ONLY)	N	120 lbs.	321523	629.00
Black	15-17	F-150 (Bracket Package ONLY)	Y	28 lbs.	321520	129.00
Black	09-14	F-150 (Ring/Upright Assembly ONLY)	N	120 lbs.	320923	600.00
Black	09-14	F-150 (Bracket Package ONLY) See Note 1	Y	25 lbs.	320920	129.00
Black	07-17	Expedition (Ring/Upright Assembly ONLY)	N	120 lbs.	320923	600.00
Black	07-17	Expedition (Bracket Package ONLY)	Y	26 lbs.	320724	129.00
Black	11-16	Super Duty F-250, F-350 Ring/Upright Assembly ONLY)	N	119 lbs.	321123	671.00
		(Will Not Fit the F-350/F-450/F-550 with Oversize Fender Flares)				
Black	11-16	Super Duty F-250, F-350 (Bracket Package ONLY)	Y	22 lbs.	321122	129.00
SST	15-17	F-150 (Ring/Upright Assembly ONLY)	N	91 lbs.	311523	######
Black	15-17	F-150 (Bracket Package ONLY)	Y	28 lbs.	321520	129.00
SST	11-16	Super Duty F-250, F-350 Ring/Upright Assembly ONLY)	N	99 lbs.	311123	######
		(Will Not Fit the F-350/F-450/F-550 with Oversize Fender Flares)				
Black	11-16	Super Duty F-250, F-350 (Bracket Package ONLY)	Y	22 lbs.	321122	129.00
	Notes:	(1) 11-14 F-150 EcoBoost Requires Kit #391120 - $65				
		BAJA GUARD - GUARD ASSEMBLY AND BRACKET PACKAGE REQUIRED FOR COMPLETE GUARD				
		CHEVROLET/GMC				
Black	14-17	Silverado/Sierra 1500 (Guard Assembly/Uprights ONLY)	N	82 lbs.	351413	631.00
Black	14-17	Silverado/Sierra 1500 (Bracket Package ONLY)	Y	27 lbs.	321411	129.00
		FORD				
Black	15-17	F-150 (Guard Assembly/Uprights ONLY)	N	82 lbs.	351523	631.00
Black	15-17	F-150 (Bracket Package ONLY)	Y	28 lbs.	321520	129.00
		TOYOTA				
Black	16-17	Tacoma (Guard Assembly/Uprights ONLY)	N	77 lbs.	351653	657.00
Black	16-17	Tacoma (Bracket Package ONLY)	Y	35 lbs.	321650	129.00
		3 inch UNIVERSAL BULL BAR ASSEMBLY (Skid Plate Sold Separately)				
SST		**WSL** Universal Bull Bar (Includes Light Mounting Holes and License Plate Bracket)	Y	20 lbs.	300310	200.00
SST		**WSL** Universal Bull Bar (Includes Light Mounting Holes and License Plate Bracket)	Y	20 lbs.	300320	200.00
Black		**WSL** Universal Bull Bar (Includes Light Mounting Holes and License Plate Bracket)	Y	20 lbs.	300350	143.00
Black		**WSL** Universal Bull Bar (Includes Light Mounting Holes and License Plate Bracket)	Y	20 lbs.	300360	143.00
		4 inch UNIVERSAL BULL BAR ASSEMBLY (Skid Plate Sold Separately)				
SST		**WSL** Universal Bull Bar (Includes Light Mounting Holes and License Plate Bracket)	Y	23 lbs.	300210	307.00
SST		**WSL** Universal Bull Bar (Includes Light Mounting Holes and License Plate Bracket)	Y	23 lbs.	300220	307.00
Black		**WSL** Universal Bull Bar (Includes Light Mounting Holes and License Plate Bracket)	Y	23 lbs.	300250	231.00
Black		**WSL** Universal Bull Bar (Includes Light Mounting Holes and License Plate Bracket)	Y	23 lbs.	300260	231.00
		UNIVERSAL BULL BAR SKID PLATE (Fits Both 3" and 4" Bull Bar Assemblies)				
SST		**WSL** Universal Bull Bar Skid Plate	Y	7 lbs.	300120	71.00

Black		**WSL** Universal Bull Bar Skid Plate		Y	7 lbs.	300130	80.00
Black		WSL BULL BAR UNIVERSAL LIGHT BAR BRACKET KIT - 18" to 22" Light Bars		Y	2 lbs.	300080	36.00

	Year	Description	FDX	Weight	Item #	Retail
		BULL BAR MOUNTING BRACKETS				
		CHEVROLET/GMC				
	16-17	**WSL** Chevrolet Silverado/GMC Sierra 1500 (Note: 1, 2, 6)	Y	5 lbs.	301611	67.00
		(Requires Bull Bar #300210, 300310 or 300250, 300350)				
	07-15	**WSL** Chevrolet Silverado/GMC Sierra 1500 (Note: 1, 2, 6)	Y	6 lbs.	300711	67.00
		(Requires Bull Bar #300210, 300310 or 300250, 300350)				
	99-07	**WSL** Chevrolet Silverado/GMC Sierra 1500 (Note: 1)	Y	5 lbs.	309911	67.00
		(Requires Bull Bar #300220, 300320 or 300260, 300360)				
	15-17	**WSL** Chevrolet Silverado/GMC Sierra 2500HD/3500 (Note: 1, 2, 6)	Y	9 lbs.	301512	79.00
		(Requires Bull Bar #300210, 300310 or 300250, 300350)				
	07-14	**WSL** Chevrolet Silverado/GMC Sierra 2500HD/3500 (Note: 1, 2, 6)	Y	9 lbs.	300712	67.00
		(Requires Bull Bar #300210, 300310 or 300250, 300350)				
	01-07	**WSL** Chevrolet Silverado/GMC Sierra 2500HD/3500 (Note: 1)	Y	5 lbs.	300112	67.00
		(Requires Bull Bar #300220, 300320 or 300260, 300360)				
	15-17	**WSL** Chevrolet Chevrolet Colorado/GMC Canyon (Requires Bull Bar #300220, 300320 or 300260, 300360	Y	4 lbs.	301510	67.00
	07-14	**WSL** Chevrolet Avalanche/Suburban/Tahoe/GMC Yukon/Yukon XL 1500 (Note: 1, 2)	Y	6 lbs.	300711	67.00
		(Requires Bull Bar #300210, 300310 or 300250, 300350)				
		DODGE/RAM				
	09-17	**WSL** Ram 1500 (Excl. Tradesman, Express and Sport) (Note: 1, 2, 5, 6)	Y	10 lbs.	300931	67.00
		(Requires Bull Bar #300220, 300320 or 300260, 300360)				
	06-17	**WSL** Dodge Ram 2500, 3500 (Note: 6)	Y	7 lbs.	301032	67.00
		(Requires Bull Bar #300210, 300310 or 300250, 300350)				
	11-13	**WSL** Dodge Durango (Requires Bull Bar #300210, 300310 or 300250, 300350)	Y	7 lbs.	301134	67.00
		FORD				
	15-17	**WSL** Ford F-150 (Requires Bull Bar #300210, 300310 or 300250, 300350) (Note: 1, 6)	Y	7 lbs.	301520	79.00
	04-14	**WSL** Ford F-150 (Excludes Harley Davidson) (Note: 1, 3, 4)	Y	4 lbs.	300921	67.00
		(Requires Bull Bar #300220, 300320 or 300260, 300360)				
		(Without Factory Tow Hooks Requires Bracket Kit #202450-$30) (Excludes Harley Davidson Model)				
	05-16	**WSL** Ford F-250/F-350 Super Duty (Requires Bull Bar #300210, 300310 or 300250, 300350)	Y	5 lbs.	300822	67.00
	11-17	**WSL** Ford Explorer (Note: 2) (Requires Bull Bar #300220, 300320 or 300260, 300360)	Y	9 lbs.	301124	79.00
		TOYOTA				
	07-17	**WSL** Tundra (Note: 1) (Requires Bull Bar #300220, 300320 or 300260, 300360)	Y	4 lbs.	300751	67.00
	16-17	**WSL** Tacoma (Note: 1, 2) (Requires Bull Bar #300220, 300320 or 300260, 300360)	Y	7 lbs.	301651	67.00
	05-15	**WSL** Tacoma (Excl. X-Runner) (Note: 1) (Requires Bull Bar #300220, 300320 or 300260, 300360)	Y	5 lbs.	300551	67.00
		NISSAN				
	16-17	**WSL** Nissan Titan XD (Note: 1) (Requires Bull Bar #300220, 300320 or 300260, 300360)	Y	7 lbs.	301660	67.00
		JEEP				
	11-13	**WSL** Jeep Grand Cherokee (Excl. Summit) (Req. Bull Bar #300210, 300310 or 300250, 300350)	Y	7 lbs.	301134	67.00
		SPRINTER				
	14-16	**WSL** Sprinter Van (Req. Bull Bar #300210, 300310 or 300250, 300350) (Will interfere with parking sensors	Y	10 lbs.	301441	90.00
Notes:	(1)	Tow Hooks Must Be Removed				
	(2)	May Require Trimming of the Plastic Air Dam				
	(3)	Does Not Fit Raptor Edition				
	(4)	Does Not Fit Heritage Edition				
	(5)	Does Not Fit Hemi Sport Models				
	(6)	Will Interfere with Parking Sensors / Collision Warning Systems				

	Year	Description	FDX	Size / Weight	Item #	Retail
		TEXTURED RUBBER MUD GUARDS				
		CHEVROLET/GMC				
	14-17	Silverado/Sierra 1500 Pickups - Front or Rear	Y	12” x 20” - 8 lbs.	251440	86.00
	15-17	Silverado/Sierra 2500HD/3500 Pickups - Front or Rear	Y	12” x 20” - 8 lbs.	251440	86.00
	07-13	Silverado/Sierra 1500/2500HD/3500 Pickups - Front or Rear (Also fits 2014 2500HD/3500)	Y	12” x 20” - 8 lbs.	250740	86.00
	14-17	Silverado/Sierra 1500 Pickups - Front or Rear	Y	12” x 23” - 9 lbs.	251443	91.00
	15-17	Silverado/Sierra 2500HD/3500 Pickups - Front or Rear	Y	12” x 23” - 9 lbs.	251443	91.00
	07-13	Silverado/Sierra 1500/2500HD/3500 Pickups - Front or Rear (Also fits 2014 2500HD/3500)	Y	12” x 23” - 9 lbs.	250743	91.00
	15-17	Silverado/Sierra Dual Wheel - Rear Only	Y	20” x 23” - 18 lbs	251544	164.00
	07-14	Silverado/Sierra Dual Wheel - Rear Only	Y	20” x 23” - 18 lbs	250744	164.00
	15-17	Colorado/Canyon - Front or Rear	Y	12” x 20” - 9 lbs.	251510	86.00

	Year	Description		FDX	Size / Weight	Item #	Retail
		TEXTURED RUBBER MUD GUARDS					
		DODGE/RAM					
	09-17	Ram 1500 - Front Only		Y	12” x 20” - 8 lbs.	250930	86.00
	10-17	Ram 2500, 3500 - Front Only (Also fits 11-17 Ram 3500 Chassis Cab)		Y	12” x 20” - 8 lbs.	250930	86.00
	09-17	Ram 1500 - Front Only		Y	12” x 23” - 9 lbs.	250932	91.00
	10-17	Ram 2500, 3500 - Front Only (Also fits 11-17 Ram 3500 Chassis Cab)		Y	12” x 23” - 9 lbs.	250932	91.00
	09-17	Ram 1500 - Rear Only		Y	12” x 20” - 8 lbs.	250931	86.00
	10-17	Ram 2500, 3500 - Rear Only		Y	12” x 20” - 8 lbs.	250931	86.00
	09-17	Ram 1500 - Rear Only		Y	12” x 23” - 9 lbs.	250933	91.00
	10-17	Ram 2500, 3500 - Rear Only		Y	12” x 23” - 9 lbs.	250933	91.00
	02-08	Ram 1500 - Front or Rear		Y	12” x 20” - 9 lbs.	250230	86.00
	02-08	Ram 1500 - Front or Rear		Y	12” x 23” - 10 lbs	250233	91.00
	10-17	Ram Dual Wheel		Y	20” x 23” - 18 lbs	251034	164.00
	03-09	Ram 2500, 3500 - Front or Rear		Y	12” x 20”- 9 lbs.	250230	86.00
	06-09	Ram Mega Cab 2500, 3500 - Front or Rear		Y	12” x 20” - 9 lbs.	250230	86.00
	03-09	Ram 2500, 3500 - Front or Rear		Y	12” x 23” - 10 lbs	250233	91.00
	06-09	Ram Mega Cab 2500, 3500 - Front or Rear		Y	12” x 23” - 10 lbs	250233	91.00
	03-09	Ram Dual Wheel		Y	20” x 23” - 18 lbs	250334	164.00
	06-09	Ram Mega Cab Dual Wheel		Y	20” x 23” - 18 lbs	250334	164.00
		FORD					
	15-17	F-150 Pickups - Front or Rear		Y	12” x 20” - 9 lbs.	251520	86.00
	04-14	F-150 Pickups - Front or Rear		Y	12” x 20” - 9 lbs.	250420	86.00
	15-17	F-150 Pickups - Front or Rear		Y	12” x 23” - 10 lbs	251523	91.00
	04-14	F-150 Pickups - Front or Rear		Y	12” x 23” - 10 lbs	250423	91.00
	2017	Super Duty F-Series Pickups - Front or Rear		Y	12” x 20” - 9 lbs.	251720	97.00
	2017	Super Duty F-Series Pickups - Front or Rear		Y	12” x 23” - 10 lbs	251723	103.00
	08-16	Super Duty F-Series Pickups - Front or Rear		Y	12” x 20” - 9 lbs.	251120	86.00
	08-16	Super Duty F-Series Pickups - Front or Rear		Y	12” x 23” - 10 lbs	251123	91.00
	2017	Super Duty F-Series Dual Wheel - Rear Only		Y	20” x 23” - 18 lbs	251724	171.00
	11-16	Super Duty F-Series Dual Wheel - Rear Only		Y	20” x 23” - 18 lbs	251124	164.00
	99-10	Super Duty F-Series Dual Wheel - Rear Only		Y	20” x 23” - 18 lbs	259924	164.00
		NISSAN					
	16-17	Titan XD - Front or Rear		Y	12” x 20” - 9 lbs.	251660	86.00
	16-17	Titan XD - Front or Rear		Y	12” x 23” - 10 lbs	251663	91.00
		UNIVERSAL					
	ALL	Universal Fit for virtually all applications not listed above (drilling required)		Y	12” x 20” - 9 lbs.	251220	86.00
	ALL	Universal Fit for virtually all applications not listed above (drilling required)		Y	12” x 23” - 10 lbs	251223	91.00
	ALL	Universal Fit for virtually all applications not listed above (drilling required)		Y	14” x 23” - 13 lbs	250014	103.00
	ALL	Universal Fit for virtually all applications not listed above (drilling required)		Y	20” x 23” - 18 lbs	252023	164.00
	ALL	Universal Fit for virtually all applications not listed above (drilling required) (w/o Stainless Steel)		Y	12” x 20” - 9 lbs.	251020	66.00
	ALL	Universal Fit for virtually all applications not listed above (drilling required) (w/o Stainless Steel)		Y	12” x 23” - 10 lbs	251023	71.00
	ALL	Universal Fit for virtually all applications not listed above (drilling required) (w/o Stainless Steel)		Y	14” x 23” - 12 lbs	251014	80.00
		TEXTURED RUBBER TOW GUARD					
	ALL	Universal Fit for Most 1/2 Ton Pickups/SUVs - Short (15")		Y	35 lbs.	255000	279.00
	ALL	Universal Fit for Most 3/4 Ton Pickups/SUVs - Long (20")		Y	40 lbs.	255100	314.00
	ALL	Accessory Heat Shield Required for GM Diesels or Trucks with Custom Rear Exhaust - 1 per Package		Y	4 lbs.	553000	36.00
	ALL	Accessory Heat Shield Required for Ram 1500 Dual Rear Exhaust - 1 per Package		Y	2 lbs.	553130	36.00
		CONTOURED, SST SPLASH GUARDS					
		CHEVROLET/GMC					
	14-17	**WSL** Silverado/Sierra 1500 Pickups - Front or Rear		Y	12” x 20” - 6 lbs.	501440	86.00
	15-17	**WSL** Silverado/Sierra 2500HD/3500 Pickups - Front or Rear		Y	12” x 20” - 6 lbs.	501440	86.00
	07-13	**WSL** Silverado/Sierra 1500/2500HD/3500 Pickups - Front or Rear (Also fits 2014 2500HD/3500)		Y	12” x 20” - 6 lbs.	500740	86.00
	14-17	**WSL** Silverado/Sierra 1500 Pickups - Front or Rear		Y	12” x 23” - 6 lbs.	501443	89.00
	15-17	**WSL** Silverado/Sierra 2500HD/3500 Pickups - Front or Rear		Y	12” x 23” - 6 lbs.	501443	89.00
	07-13	**WSL** Silverado/Sierra 1500/2500HD/3500 Pickups - Front or Rear (Also fits 2014 2500HD/3500)		Y	12” x 23” - 6 lbs.	500743	89.00
	15-17	**WSL** Silverado/Sierra Dual Wheel - Rear Only		Y	20” x 23” - 14 lbs	501544	143.00
	07-14	**WSL** Silverado/Sierra Dual Wheel - Rear Only		Y	20” x 23” - 14 lbs	500744	143.00
	99-07	**WSL** Silverado/Sierra Pickups (Classic Body Style) - Front or Rear		Y	12” x 20” - 7 lbs.	509910	86.00
	03-06	**WSL** Avalanche without Body Hardware - Front Only		Y	12” x 20” - 7 lbs.	509910	86.00
	99-07	**WSL** Silverado/Sierra Pickups (Classic Body Style) - Front or Rear		Y	12” x 23” - 8 lbs.	509913	89.00
	01-07	**WSL** Silverado/Sierra HD (Classic Body Style) - Front or Rear		Y	12“ x 20” - 7 lbs.	509910	86.00
	01-07	**WSL** Silverado/Sierra HD (Classic Body Style) - Front or Rear		Y	12” x 23” - 8 lbs.	509913	89.00
	15-17	**WSL** Tahoe/Suburban/Yukon/Yukon XL - Front Only		Y	12” x 20” - 6 lbs.	501510	114.00
	15-17	**WSL** Tahoe/Suburban/Yukon/Yukon XL - Rear Only		Y	12” x 20” - 6 lbs.	501511	114.00
	07-14	**WSL** Tahoe/Suburban/Avalanche/Yukon/Yukon XL - Front or Rear		Y	12” x 20” - 6 lbs.	500710	86.00

	07-14	**WSL** Tahoe/Suburban/Avalanche/Yukon/Yukon XL - Front or Rear		Y	12” x 23” - 6 lbs.	500713	89.00
	00-06	**WSL** Suburban/Tahoe/Yukon - Front Only		Y	12” x 20” - 7 lbs.	509910	86.00
	01-07	**WSL** Silverado/Sierra Dual Wheel (Classic Body Style) - Rear Only		Y	20” x 23” - 14 lbs	500114	143.00

Finish	Year	Description		FDX	Size / Weight	Item #	Retail
		CONTOURED, SST SPLASH GUARDS					
		DODGE/RAM					
	09-17	**WSL** Ram 1500 - Front Only		Y	12” x 20” - 6 lbs.	500930	86.00
	10-17	**WSL** Ram 2500, 3500 - Front Only (Also fits 11-14 Ram 3500 Chassis Cab)		Y	12” x 20” - 6 lbs.	500930	86.00
	09-17	**WSL** Ram 1500 - Front Only		Y	12” x 23” - 7 lbs.	500932	89.00
	10-17	**WSL** Ram 2500, 3500 - Front Only (Also fits 11-14 Ram 3500 Chassis Cab)		Y	12” x 23” - 7 lbs.	500932	89.00
	09-17	**WSL** Ram 1500 - Rear Only		Y	12” x 20” - 6 lbs.	500931	86.00
	10-17	**WSL** Ram 2500, 3500 - Rear Only		Y	12” x 20” - 6 lbs.	500931	86.00
	09-17	**WSL** Ram 1500 - Rear Only		Y	12” x 23” - 7 lbs.	500933	89.00
	10-17	**WSL** Ram 2500, 3500 - Rear Only		Y	12” x 23” - 7 lbs.	500933	89.00
	02-08	**WSL** Ram 1500 - Front or Rear		Y	12” x 20” - 7 lbs.	500230	86.00
	02-08	**WSL** Ram 1500 - Front or Rear		Y	12” x 23” - 8 lbs.	500233	89.00
	10-17	**WSL** Ram 2500, 3500 Dual Wheel/Mega Cab Dual Wheel - Rear Only		Y	20” x 23” - 15 lbs	501034	143.00
	03-09	**WSL** Ram 2500, 3500 - Front or Rear		Y	12” x 20” - 6 lbs.	500230	86.00
	06-09	**WSL** Ram Mega Cab 2500, 3500 - Front or Rear		Y	12” x 20” - 7 lbs.	500230	86.00
	03-09	**WSL** Ram 2500, 3500 - Front or Rear		Y	12” x 23” - 8 lbs.	500233	89.00
	06-09	**WSL** Ram Mega Cab 2500, 3500 - Front or Rear		Y	12” x 23” - 7 lbs.	500233	89.00
	03-09	**WSL** Ram Dual Wheel - Rear Only		Y	20” x 23” - 13 lbs	500334	143.00
	06-09	**WSL** Ram Mega Cab Dual Wheel - Rear Only		Y	20” x 23” - 13 lbs	500334	143.00
	04-09	**WSL** Durango		Y	12” x 20” - 7 lbs.	500430	86.00
		FORD					
	04-14	**WSL** F-150 Pickups - Front or Rear		Y	12” x 20” - 7 lbs.	500420	86.00
	05-08	**WSL** Lincoln Mark LT - Front or Rear		Y	12” x 20” - 7 lbs.	500420	86.00
	04-14	**WSL** F-150 Pickups - Front or Rear		Y	12” x 23” - 8 lbs.	500423	89.00
	05-08	**WSL** Lincoln Mark LT - Front or Rear		Y	12” x 23” - 8 lbs.	500423	89.00
	08-16	**WSL** Super Duty F-Series Pickups - Front or Rear		Y	12” x 23” - 7 lbs.	501123	89.00
	99-07	**WSL** Super Duty F-Series Pickups - Front or Rear		Y	12” x 23” - 8 lbs.	509923	89.00
	11-16	**WSL** Super Duty F-Series Dual Wheel - Rear Only		Y	20” x 23” - 15 lbs	501124	143.00
	99-10	**WSL** Super Duty F-Series Dual Wheel - Rear Only		Y	20” x 23” - 14 lbs	509924	143.00
		UNIVERSAL					
	ALL	**WSL** Universal Fit for virtually all applications not listed above (drilling required)		Y	12” x 20” - 7 lbs.	501220	86.00
		TRADITIONAL, SST SPLASH GUARDS					
		CHEVROLET/GMC					
	07-13	**WSL** Silverado/Sierra Pickups - Front or Rear		Y	12” x 20” - 8 lbs.	510741	99.00
	01-07	**WSL** Silverado/Sierra HD (Classic Body Style) - Front or Rear		Y	12” x 23” - 8 lbs.	549660	99.00
	01-07	**WSL** Silverado/Sierra HD Dual Wheel (Classic Body Style)		Y	20” x 23” - 15 lbs	549690	143.00
		DODGE/RAM					
	87-97	**WSL** Dakota or Mid-Size		Y	10” x 20” - 7 lbs.	544011	80.00
		FORD					
	04-14	**WSL** F-150 Pickups - Rear Only		Y	12” x 23” - 8 lbs.	510422	97.00
	05-08	**WSL** Lincoln Mark LT - Rear Only		Y	12” x 23” - 8 lbs.	510422	97.00
	99-07	**WSL** Super Duty F-Series - Front Only		Y	10” x 20” - 5 lbs.	544011	80.00
	99-10	**WSL** Super Duty F-Series - Dual Wheel		Y	20” x 23” - 13 lbs	548360	143.00
		UNIVERSAL					
	ALL	**WSL** Mid-Size Vehicles		Y	10” x 20” - 7 lbs.	544011	80.00

	Year	Description	FDX	Weight	Item #	Retail
		TUFF GUARD ASSEMBLY				
Black		Universally Fits Shown Models Below with Listed Mounting Brackets - 15° Bend	N	69 lbs.	205501	556.00
Black		Universally Fits Shown Models Below with Listed Mounting Brackets - 25° Bend	N	68 lbs.	205505	556.00
SST		Universally Fits Shown Models Below with Listed Mounting Brackets - 15° Bend	N	63 lbs.	205500	883.00
SST		Universally Fits Shown Models Below with Listed Mounting Brackets - 25° Bend	N	66 lbs.	205504	883.00
		TUFF GUARD II ASSEMBLY				
Black		Universally Fits Shown Models Below with Listed Mounting Brackets	N	76 lbs.	206511	664.00
Polished		Universally Fits Shown Models Below with Listed Mounting Brackets	N	76 lbs.	206510	966.00
		PROTEC GRILLE GUARD ASSEMBLY				
Black		ProTec Grille Guard - 15° Bend (One-Piece Ring Assembly ONLY)	N	156 lbs.	205516	747.00
Black		ProTec Grille Guard - 25° Bend (One-Piece Ring Assembly ONLY)	N	162 lbs.	205518	747.00
SST		ProTec Grille Guard - 15° Bend (One-Piece Ring Assembly ONLY)	N	107 lbs.	205515	######
SST		ProTec Grille Guard - 25° Bend (One-Piece Ring Assembly ONLY)	N	116 lbs.	205517	######
Black	ALL	TUFF GUARD/PROTEC GRILLE GUARD LICENSE PLATE KIT	Y		205495	21.00
		TUFF GUARD/PROTEC MOUNTING BRACKETS - Slide Latch System				
		FREIGHTLINER				
	08-17	Freightliner Cascadia (25° Bend Recommended) (Excludes trucks with 505+ HP Engines or with 100,000+ LB Gross Combination Weight as those models require a larger radiator which also relocates the recovery "tow" hooks)	Y	26 lbs.	205760	437.00
	91-17	Freightliner Classic (15° Bend Recommended)	Y	20 lbs.	205560	121.00
	01-17	Freightliner Columbia (15° Bend Recommended) (Painted 3-Piece Standard Bumper Only)	Y	14 lbs.	205600	121.00
		PETERBILT				
	87-07	Peterbilt 379 (15° Bend Recommended)	Y	21 lbs.	205520	121.00
	87-07	Peterbilt 378 (15° Bend Recommended for Flat Bumper / 25° Bend Recommended for Kick Back Bumper)	Y	21 lbs.	205520	121.00
	06-17	Peterbilt 386 (25° Bend Recommended)	Y	23 lbs.	205720	326.00
	07-17	Peterbilt 388/389 (15° Bend Recommended)	Y	47 lbs.	205820	391.00
	12-17	Peterbilt 579 (25° Bend Recommended)	Y	48 lbs.	205840	403.00
	13-17	Peterbilt 587 (25° Bend Recommended)	Y	48 lbs.	205870	336.00
		INTERNATIONAL				
	97-17	International 9200/9400 Series (15° Bend Recommended)	Y	27 lbs.	205580	203.00
	01-17	International DuraStar/TranStar (25° Bend Recommended)	Y	10 lbs.	205740	121.00
	02-10	International 8600 (25° Bend Recommended)	Y	10 lbs.	205740	121.00
	08-17	International ProStar (25° Bend Recommended) (All Metal Bumpers Req. Kit #205696 - $27)	Y	45 lbs.	205680	403.00
	08-17	International ProStar (25° Bend Recommended) (Radar Compatible Collision Avoidance System Bracket Package) (All Metal Bumpers Req. Kit #205696 - $27)	Y	43 lbs.	205695	299.00
		KENWORTH				
	87-17	Kenworth T800 (15° Bend Recommended)	Y	10 lbs.	205540	121.00
	82-17	Kenworth W900 (15° Bend Recommended)	Y	21 lbs.	205640	163.00
	85-07	Kenworth T600 (25° Bend Recommended)	Y	12 lbs.	205660	121.00
	07-17	Kenworth T660 (25° Bend Recommended)	Y	23 lbs.	205720	326.00
	11-17	Kenworth T680/T700 (25° Bend Recommended)	Y	48 lbs.	205840	403.00
		GMC/CHEVROLET				
	03-10	GMC Topkick/Chevrolet Kodiac (C6500-C8500) (25° Bend Recommended)	Y	21 lbs.	205700	163.00
		FORD				
	04-17	Ford F-650/F-750 Series (25° Bend Recommended)	Y	17 lbs.	205770	121.00
	15-17	Ford Transit Tuff Guard Assembly - Black	N	65 lbs.	205530	557.00
	15-17	Ford Transit Tuff Guard Mounting Brackets	Y	23 lbs.	205920	184.00
		MACK				
	07-17	Mack Pinnacle CHU (15° Bend) Required with Fog Lights or w/o Fog Lights in Higher Position	Y	27 lbs.	205780	294.00
	07-17	Mack Pinnacle CHU (15° Bend) Without Fog Lights - Positions Guard Lower on Truck/Blocks Fog Lights	Y	41 lbs.	205880	350.00
	07-17	Mack Pinnacle CXU (Chrome Metal Bumper with Plastic Trim) (25° Bend) Req w/Fog Lights	Y	27 lbs.	205780	294.00
	07-17	Mack Pinnacle CXU (Chrome Metal Bumper with Plastic Trim) (25° Bend) Without Fog Lights	Y	41 lbs.	205880	350.00
	07-17	Mack Pinnacle CXU (All Metal Bumper - No Plastic Trim) (25° Bend) Required with Fog Lights	Y	27 lbs.	205780	294.00
	07-17	Mack Pinnacle CXU (All Metal Bumper - No Plastic Trim) (25° Bend) Without Fog Lights	Y	41 lbs.	205880	350.00

Year	Description	FDX	Weight	Item #	Retail
	TUFF GUARD/PROTEC MOUNTING BRACKETS - Slide Latch System				
	VOLVO				
04-17	Volvo New Style VN & VT (15° Bend Recommended)	Y	24 lbs.	205620	327.00
	WESTERN STAR				
11-17	Western Star 4900 SB (without fog lights) (25° Bend Recommended)	Y	22 lbs.	205900	149.00
	SPRINTER				
07-17	Mercedes/Freightliner Sprinter Tuff Guard Assembly - Black	N	65 lbs.	205530	557.00
14-17	Mercedes/Freightliner Sprinter Tuff Guard Mounting Brackets (Will interfere with parking sensors)	Y	13 lbs.	205930	200.00
07-13	Mercedes/Freightliner Sprinter Tuff Guard Mounting Brackets	Y	15 lbs.	205860	130.00
	RAM				
14-17	Ram ProMaster Van Tuff Guard Assembly - Black	N	65 lbs.	205530	557.00
14-17	Ram ProMaster Van Tuff Guard Mounting Brackets	Y	14 lbs.	205910	184.00
	TUFF GUARD/PROTEC MOUNTING BRACKETS - MagLatch System				
	FREIGHTLINER				
08-17	Freightliner Cascadia (25° Bend Recommended) (Excludes trucks with 505+ HP Engines or with 100,000+ LB Gross Combination Weight as those models require a larger radiator which also relocates the recovery "tow" hooks)	Y	56 lbs.	206760	487.00
	PETERBILT				
06-17	Peterbilt 386 (25° Bend Recommended)	Y	27 lbs.	206720	403.00
12-17	Peterbilt 579 (25° Bend Recommended)	Y	42 lbs.	206840	487.00
	INTERNATIONAL				
08-17	International ProStar (25° Bend Recommended) (All Metal Bumpers Req. Kit #205696 - $27)	Y	38 lbs.	206680	487.00
08-17	International ProStar (25° Bend Recommended) (Radar Compatible Collision Avoidance System Bracket Package) (All Metal Bumpers Req. Kit #205696 - $27)	Y	40 lbs.	206695	487.00
	KENWORTH				
07-17	Kenworth T660 (25° Bend Recommended)	Y	27 lbs.	206720	403.00
11-17	Kenworth T680/T700 (25° Bend Recommended)	Y	42 lbs.	206840	487.00
	MACK				
07-17	Mack Pinnacle CHU (15° Bend) Required with Fog Lights or w/o Fog Lights in Higher Position	Y		206780	387.00
07-17	Mack Pinnacle CHU (15° Bend) Without Fog Lights - Positions Guard Lower on Truck/Blocks Fog Lights	Y		206880	437.00
07-17	Mack Pinnacle CXU (Chrome Metal Bumper with Plastic Trim) (25° Bend) Req w/Fog Lights	Y		206780	387.00
07-17	Mack Pinnacle CXU (Chrome Metal Bumper with Plastic Trim) (25° Bend) Without Fog Lights	Y		206880	437.00
07-17	Mack Pinnacle CXU (All Metal Bumper - No Plastic Trim) (25° Bend) Required with Fog Lights	Y		206780	387.00
07-17	Mack Pinnacle CXU (All Metal Bumper - No Plastic Trim) (25° Bend) Without Fog Lights	Y		206880	437.00
	VOLVO				
04-17	Volvo New Style VN & VT (15° Bend Recommended)	Y	35 lbs.	206620	411.00
	STOR-AWAY				
09-14	**WSL** Ford F-150 Super Crew	Y	34 lbs.	540923	471.00
	ECOBOOST INSERTS				
11-14	**WSL** Ford F-150 EcoBoost - Flat Black Insert	Y	2 lbs.	561121	50.00
11-14	**WSL** Ford F-150 EcoBoost - Chrome Insert	Y	2 lbs.	561123	64.00
11-14	**WSL** Ford F-150 EcoBoost - Stainless Steel Insert	Y	2 lbs.	561122	79.00
	GM BUMPER INSERT				
15-17	**WSL** Chevrolet Silverado 2500HD/3500 - Stainless Steel Insert	Y	4 lbs.	561512	86.00
15-17	**WSL** Chevrolet Silverado 2500HD/3500 - Black Insert	Y	6 lbs.	561511	64.00

	Year	Description		FDX	Weight	Item #	Retail
		LUVERNE TONNEAU COVER (No Discounts)					
		CHEVROLET/GMC					
	14-17	**WSL** Chevrolet Silverado/GMC Sierra 5.8 ft. Box		Y	29 lbs.	761411	379.00
	07-13	**WSL** Chevrolet Silverado/GMC Sierra 5.8 ft. Box		Y	29 lbs.	760711	379.00
	07-13	**WSL** Chevrolet Silverado/GMC Sierra 6.5 ft. Box		Y	29 lbs.	760712	379.00
		RAM					
	09-17	**WSL** Ram 1500 5.7 ft. Box		Y	29 lbs.	760931	379.00
	09-17	**WSL** Ram 1500, 2500, 3500 6.4 ft. Box		Y	29 lbs.	760932	379.00
		FORD					
	15-17	**WSL** Ford F-150 5.5 ft. Box		Y	29 lbs.	761521	379.00
	15-17	**WSL** Ford F-150 6.5 ft. Box		Y	29 lbs.	761522	379.00
	08-16	**WSL** Ford F-250/F-350 6.5 ft. Box		Y	30 lbs.	760822	379.00
		GM LIGHT DUTY TOWING MIRRORS					
		CHEVROLET/GMC - Will Not Work if Vehicle is Equipped with LED Rear Guidance Lamps					
	14-17	Chevrolet Silverado/GMC Sierra 1500 - Left Hand Mirror		Y	10 lbs.	611931	267.00
	14-17	Chevrolet Silverado/GMC Sierra 1500 - Right Hand Mirror		Y	10 lbs.	611932	267.00
	15-17	Chevrolet Silverado/GMC Sierra 2500HD/3500 - Left Hand Mirror		Y	10 lbs.	611933	267.00
	15-17	Chevrolet Silverado/GMC Sierra 2500HD/3500 - Right Hand Mirror		Y	10 lbs.	611934	267.00

		Description		FDX	Weight	Item #	
		DISPLAYS					
		Gridwall Display Panel and Fastener Kit - Includes Two 2' x 5' Grids and One 2' x 6' Grid		N	50 lbs.	590130	
		Gridwall Display Header and Bracket Kit to Mount Product		Y	8 lbs.	590140	
		Slatwall Display Header and Bracket Kit to Mount Product		Y	8 lbs.	590150	
		DISPLAY SAMPLES:					
		26” MegaStep Sample (Hitch Step when used with Receiver Stinger)		Y	6 lbs.	575226	
		26” Silver O-Mega II Sample (Hitch Step when used with Receiver Stinger)		Y	6 lbs.	583026	
		26” Black O-Mega II Sample (Hitch Step when used with Receiver Stinger)		Y	6 lbs.	584026	
		WSL 26” Satin O-MegaStep Sample (Hitch Step when used with Receiver Stinger)		Y	5 lbs.	585026	
		WSL 26” Black O-MegaStep Sample (Hitch Step when used with Receiver Stinger)		Y	5 lbs.	586026	
		26” Grip Step Sample (Hitch Step when used with Receiver Stinger)		Y	9 lbs.	415026	
		38" 6" SST Oval Step Sample		Y		240038	
		WSL 24” 4” Oval Nerf Bar Sample		Y	7 lbs.	440024	
		26” 3” Round Nerf Bar Sample		Y	9 lbs.	460026	
		38” Regal 7 Oval Step Sample - Polished		Y	9 lbs.	477038	
		38” Regal 7 Oval Step Sample - Black		Y	9 lbs.	277038	
		38” Baja Step Sample - Black		Y	16 lbs.	430038	
		WSL 38” Baja Step Sample - Polished Stainless Steel		Y	16 lbs.	490038	
		38” Side Entry Step Sample		Y	8 lbs.	480038	
		38” Side Entry Step Sample - Black		Y	8 lbs.	280038	
		WSL Aluminum Oval Bed Rail Sample - Chrome Finish		Y	4 lbs.	518000	
		20” Textured Rubber Mud Guard Sample		Y	5 lbs.	250020	
		WSL 20” Contoured, Stainless Steel Splash Guard Sample		Y	6 lbs.	500020	
		DUAL GRILLE GUARD DISPLAY STAND (2 High)		Y	44 lbs.	590730	
		PROWLER GRILLE GUARD DISPLAY STAND		Y	20 lbs.	590180	
		WSL LUVERNE TONNEAU COVER DISPLAY STAND		N	30 lbs.	760200	

TERMS AND CONDITIONS OF SALES

TERMS
Luverne Truck Equipment, Inc. terms are Net 30 days. All accounts over 30 days are subject to a 2% service charge per month. Accounts can be subject to C.O.D. shipments if unpaid balances are over 60 days past due.

PRICING
All prices are effective July 1, 2016 and are subject to change without notice.

RETURNS
Product for models listed in the current catalog (not including "WSL" (While Supplies Last) items highlighted in gray) may be returned for credit toward future purchases on the following conditions:
1. Written or verbal approval from Luverne Truck Equipment
2. Product returned in original undamaged carton.
3. RETURNS MUST BE SHIPPED FREIGHT PREPAID.

All credits will be based on original purchase price and are subject to a 20% restocking charge. Request an authorization number for return and make sure this number appears on the box of the item being returned. No returns will be accepted without return authorization number and original invoice number.

"WSL" (While Supplies Last) Models May Not Be Returned.

FREIGHT
All orders will be shipped F.O.B. Brandon, South Dakota. We encourage you to consolidate orders to ensure the best purchase price and amassing weight for more favorable freight rates. If size and weight allow, FedEx next day, second day air and three-day select are available -- charges are added to the invoice.

PRODUCT WEIGHTS
Product weights listed in this Price List are shipping weights for calculating FedEx and Freight charges.

LEAD TIME
In an effort to reduce or eliminate the problem of back orders, we request a lead time of three weeks on all orders. Every effort will be made to notify the purchaser of back orders if they arise.

OTHER INFORMATION
Contact your Luverne Truck Regional or Territory Manager to provide details concerning promotional materials, pricing, delivery, or shipping.

ADDITIONAL TERMS AND CONDITIONS FOR CANADIAN CUSTOMERS

TERMS
ALL PAYMENTS ARE DUE IN US DOLLARS. Luverne Truck Equipment, Inc. terms are Net 30 days. All accounts over 30 days are subject to a 2% service charge per month. Accounts can be subject to C.O.D. shipments if unpaid balances are over 60 days past due.

PRICING
ALL PRICING IS IN US DOLLARS. All prices are effective July 1, 2016 and are subject to change without notice.

RETURNS
Product for models listed in the current catalog (not including "WSL" [While Supplies Last] items highlighted in gray) may be returned for credit toward future purchases on the following conditions:
1. Written or verbal approval from Luverne Truck Equipment, Inc.
2. Product returned in original undamaged carton.
3. **RETURNS MUST BE SHIPPED FREIGHT PREPAID TO OUR EASTERN OR WESTERN CANADA WAREHOUSES:**
   EASTERN CANADA: U.T.I. / 181 Pinebush Rd. / Cambridge, ON N1R 7H8
   WESTERN CANADA: Porter Warehousing & Distribution, Inc. / 15703 - 114 Avenue / Edmonton, AB T5M 2Z3

FREIGHT
All orders will be shipped freight prepaid. Shipping charges will be added to all invoices except as follows:

1. Orders will be shipped freight free except for orders containing items which must be shipped by common carrier as indicated in the price list as “not FDX-able”.
2. Free freight for orders containing “not FDX-able” items requires orders of $1,000 or more.

PLEASE NOTE: Listed applications for all Luverne products fit all models available for given years unless specifically noted (i.e.

WARRANTY PROCEDURE:

1. Examine the product in question; record serial number, product description, and obtain a dated consumer "receipt of purchase."
2. Contact your territory manager and provide him with the above information plus any other pertinent information he may request.
3. The territory manager will fill out a Warranty / Allowance Request Form. He will return the completed form with "receipt attached" to the Quality Department at Luverne Truck Equipment, 1200 E. Birch St., Brandon, SD 57005. Your warranty request will be promptly

THE LUVERNE PROMISE

Limited Warranty

Workmanship and Materials

Luverne Truck warrants its products to the original purchaser to be free from defects in materials and workmanship (excluding the finish of products that is separately warranted below) for a period of five (5) years or 60,000 miles (whichever comes first). This limited warranty is valid as long as the original purchaser complies with the terms and conditions of this warranty and Luverne's Use and Care Instructions. During this warranty term, Luverne shall, at its option, repair or furnish a replacement product for any product manufactured by Luverne that is deemed by Luverne to be defective. Luverne's sole liability shall be for furnishing a replacement product and NO INCIDENTAL OR CONSEQUENTIAL DAMAGES MAY BE ASSERTED AGAINST LUVERNE UNDER ANY CIRCUMSTANCE WHATSOEVER. LUVERNE'S LIQUIDATED DAMAGES IN ANY SITUATION MAY NOT EXCEED THE RETAIL PRICE OF THE PRODUCT.

Finish

Luverne separately warrants the finish on its products to the original purchaser for the following time periods:

Stainless Steel Products	Lifetime
Black Powdercoated Stainless Steel Products	Lifetime Against Corrosion
Black Powdercoated Mild Steel Products	12 months/12,000 miles
Chrome Plated Products	12 months/12,000 miles
Aluminum Products	12 months/12,000 miles

This limited warranty is valid as long as the original purchaser complies with the terms and conditions of this warranty and Luverne's Use and Care Instructions. During this warranty term, Luverne shall, at its option, repair or furnish a replacement product for any product manufactured by Luverne that is deemed by Luverne to be defective. Luverne's sole liability shall be for furnishing a replacement product and NO INCIDENTAL OR CONSEQUENTIAL DAMAGES MAY BE ASSERTED AGAINST LUVERNE UNDER ANY CIRCUMSTANCE WHATSOEVER. LUVERNE'S LIQUIDATED DAMAGES IN ANY SITUATION MAY NOT EXCEED THE RETAIL PRICE OF THE PRODUCT.

Warranty Terms

Luverne's responsibility shall be to furnish the replacement product and pay shipping costs to the nearest Luverne dealer. The original purchaser shall be responsible for any shipping costs to Luverne and from the nearest dealer to the original customer. All costs of removal and installation, any wiring or other labor costs shall not be the responsibility of Luverne.

This warranty shall not apply to any product which has been in an accident, modified or altered, improperly installed or installed other than as it was intended, welded by anyone other than Luverne, subjected to off highway, any competition or commercial use, or misused. The finish warranty shall not apply to damage from rocks, gravel pitting, scratching, abnormal physical conditions, severe weather conditions, vandalism, repainting, or smoke or fire damage.

All warranty claims must be initiated by the original purchaser presenting a receipt of sale and the warranted product to the business where they purchased the product.

Use and Care Instructions

Stainless Steel is a naturally stain and corrosion resistant material, but it can be damaged or ruined with improper treatment. A few simple steps will maintain your Luverne stainless steel products. Proper cleaning is essential, especially during winter use. Salts, mud, mineral deposits and other semi-permanent debris can lead to corrosion and permanent staining. We recommend thorough cleaning of all surfaces once a week and/or after hard use. Use a mild automotive detergent but never use dishwashing detergent, abrasive cleansers such as Comet®, Softscrub®, or other similar products, abrasive pads such as SOS®, chore balls, wire scouring pads, steel wool, Scotch-Brite®, or chemicals which may etch metal. These products may scratch or deposit microscopic particles that become permanently lodged in the stainless steel and damage the polished finish. Dry the surface thoroughly to remove any mineral deposits left by water. Apply a non-abrasive stainless steel polish for a bright and beautiful finish.

Paint, Chrome Plating, and Aluminum have surface finishes that must be treated like any other exterior automotive finish. Just like your vehicle, Luverne products should be protected from the elements, receive periodic washing with automotive cleaners (no bleach, dish soap, automatic dishwasher detergent, laundry soap, or abrasive cleaners or scouring pads). Protecting and treating your product's finish with a non-abrasive wax or chrome polish applied according to the manufacturer's instructions can prolong and protect the beauty and longevity.

Part Number	Description		LED	MSRP
HD-DISP-9	Illuminated Maxxima MLS Series Display			$ 243.00
HDI-DISP-10	Illuminated Giant Maxxima LED Display - MOAD			$ 1,613.25
HDI-DISP-11	Illuminated Maxxima Work Light Display			$ 1,073.25
HDI-DISP-12	Illuminated Maxxima Head Light Display			$ 1,343.25
HDI-DISP-13	Illuminated Maxxima 7" Head Light Display			$ 668.25
HDI-DISP-7	Illuminated Maxxima Full Line LED Display			$ 607.50
HDI-DISP-8	Illuminated Maxxima Emergency Warning Display			$ 472.50
LCL-3BL	Chrome Micro Blue LED Courtesy Light		3 LED	$ 9.44
LCL-3CL	Chrome Micro White LED Courtesy Light		3 LED	$ 9.44
LCL-3MBR	Chrome Micro Amber LED Courtesy Light		3 LED	$ 5.39
LCL-3R	Chrome Micro Red LED Courtesy Light		3 LED	$ 5.39
LCL-3RWB-03	Patriot Series RWB 3 Pack SPECIAL	**Buy One Get One Free**	3 LED	$ 25.64
LED-063CL	Interior Courtesy Flip Light - White LED		1 LED	$ 8.78
LED-09B-MBR	**DISCONTINUED**			
LED-09CH-MBR	**DISCONTINUED**			
LED-300CL	Rectangular White LED Courtesy Light		3 LED	$ 9.38
LED-300MBR	Rectangular Amber LED Courtesy Light		3 LED	$ 5.52
LED-300R	Rectangular Red LED Courtesy Light		3 LED	$ 5.52
LED-963MBR	**DISCONTINUED**			$ -
M09100R	2" Round Red		9 LED	$ 6.01
M09100RCL	2" Round Red Clear Lens		9 LED	$ 6.01
M09100R-DV	2" Round Red Dual Voltage 12/24 VDC		9 LED	$ 7.36
M09100WCL	2" Round White Clear Lens Light		9 LED	$ 12.76
M09100Y	2" Round Amber		9 LED	$ 6.01
M09100YCL	2" Round Amber Clear Lens		9 LED	$ 6.01
M09100Y-DV	2" Round Amber Dual Voltage 12/24 VDC		9 LED	$ 7.36
M09105R	2" Beehive Red		9 LED	$ 6.01
M09105Y	2" Beehive Amber		9 LED	$ 6.01
M09250RCL-X	2" Round Red Clear Lens - OEM Bulk 50 Pack		5 LED	#VALUE!
M09250R-X	2" Round Red - OEM Bulk 50 Pack		5 LED	#VALUE!
M09250YCL-X	2" Round Amber Clear Lens - OEM Bulk 50 Pack		5 LED	#VALUE!
M09250Y-X	2" Round Amber - OEM Bulk 50 Pack		5 LED	#VALUE!
M09300BCL	3/4" Round Blue Clear Lens For Auxiliary Use Only		3 LED	$ 7.06
M09300G	3/4" Round Green For Auxiliary Use Only		3 LED	$ 6.79
				$ 4.93
M09300R-3	3/4" Round P2PC Red ID 3 Light System with 56" Harness		3 LED	$ 21.53
M09300RAS	3/4" Round Red Mini Aux Stop/Turn P2 Only		3 LED	$ 8.03
M09300RAS-X	3/4" Round Red Mini Aux Stop/Turn P2 Only Bulk Pack Only		3 LED	#VALUE!
				$ 4.93
M09300RCL-DV	3/4" Round P2PC CM Red Clear Lens 12/24VDC		3 LED	$ 7.76
				#VALUE!
M09300R-DV	3/4" Round P2PC CM Red 12/24VDC		3 LED	$ 7.76
				#VALUE!
				#VALUE!
M09300WCL	3/4" Round Auxiliary White Clear Lens		3 LED	$ 7.06
				$ 4.93
M09300YAT	3/4" Round Amber Aux Turn P2 Only		3 LED	$ 8.03
M09300YAT-X	3/4" Round Amber Aux Turn P2 Only Bulk Pack Only		3 LED	#VALUE!
				$ 4.93
M09300YCL-DV	3/4" Round P2PC CM Amber Clear Lens 12/24VDC		3 LED	$ 7.76
				#VALUE!
				#VALUE!
M09300Y-DV	3/4" Round P2PC CM Amber 12/24VDC		3 LED	$ 7.76
M09300Y-X	**3/4" Round P2PC CM Amber 50 Unit Bulk Pack**		**3 LED**	#VALUE!
M09320RCL	**3/4" Round P2 CM Red Clear Lens**		**1 LED**	$ 4.17
M09320RCL-X	**3/4" Round P2 CM Red Clear Lens 50pc Bulk Pack**		**1 LED**	#VALUE!
M09320R	**3/4" Round P2 CM Red**		**1 LED**	$ 4.17

M09320R-X	**3/4" Round P2 CM Red 50pc Bulk Pack**	**1 LED**		#VALUE!
M09320YCL	**3/4" Round P2 CM Amber Clear Lens**	**1 LED**	$	4.17
M09320YCL-X	**3/4" Round P2 CM Amber Clear Lens 50pc Bulk Pack**	**1 LED**		#VALUE!
M09320Y	**3/4" Round P2 CM Amber**	**1 LED**	$	4.17
M09320Y-X	**3/4" Round P2 CM Amber 50pc Bulk Pack**	**1 LED**		#VALUE!
M09350RCL-X	1.50" Rectangular P2 CM Red Clear Lens 50pc Bulk Pack	1 LED		#VALUE!
M09350RCL	1.50" Rectangular P2 CM Red Clear Lens	1 LED	$	6.95
M09350R-X	1.50" Rectangular P2 CM Red 50pc Bulk Pack	1 LED		#VALUE!
M09350R	1.50" Rectangular P2 CM Red	1 LED	$	6.95
M09350YCL-X	1.50" Rectangular P2 CM Amber Clear Lens 50pc Bulk Pack	1 LED		#VALUE!
M09350YCL	1.50" Rectangular P2 CM Amber Clear Lens	1 LED	$	6.95
M09350Y-X	1.50" Rectangular P2 CM Amber 50pc Bulk Pack	1 LED		#VALUE!
M09350Y	1.50" Rectangular P2 CM Amber	1 LED	$	6.95
M09360BCL	1.50" Rectangular Blue Clear Lens Auxiliary	3 LED	$	9.38
M09360G	1.50" Rectangular Green Auxiliary	3 LED	$	9.38
M09360R	1.50" Rectangular P2PC CM Red	3 LED	$	7.49
M09360RCL	1.50" Rectangular P2PC CM Red Clear Lens	3 LED	$	7.49
M09360WCL	1.50" Rectangular White Courtesy Light	3 LED	$	9.38
M09360Y	1.50" Rectangular P2PC CM Amber	3 LED	$	7.49
M09360YCL	1.50" Rectangular P2PC CM Amber Clear Lens	3 LED	$	7.49
M09370BCL	1" Round Micro Warning Blue w/ Stainless Steel Cover	1 LED	$	25.58
M09370R	1" Round Micro Warning Red w/ Stainless Steel Cover	1 LED	$	25.58
M09370RCL	1" Round Micro Warning Red Clear Lens w/ Stainless Steel Cover	1 LED	$	25.58
M09370WCL	1" Round Micro Warning White w/ Stainless Steel Cover	1 LED	$	25.58
M09370WCL-NS	1" Round Micro Work Light 50 Lumens	1 LED	$	24.23
M09370Y	1" Round Micro Warning Amber w/ Stainless Steel Cover	1 LED	$	25.58
M09370YCL	1" Round Micro Warning Amber Clear Lens w/ Stainless Steel Cover	1 LED	$	25.58
M09400BCL	1 1/4" Round Blue Clear Lens Auxiliary	6 LED	$	8.84
M09400G	1 1/4" Round Green Auxiliary	6 LED	$	8.84
M09400R	1 1/4" Round P2PC CM Red	6 LED	$	7.49
M09400RCL	1 1/4" Round P2PC CM Red Clear Lens	6 LED	$	7.49
M09400WCL	1 1/4" Round White Courtesy Light	6 LED	$	8.84
M09400WCL-D	1 1/4" Round White Courtesy Light - OEM Style Connector	6 LED	$	10.45
M09400Y	1 1/4" Round P2PC CM Amber	6 LED	$	7.49
M09400YCL	1 1/4" Round P2PC CM Amber Clear Lens	6 LED	$	7.49
M09410R	1 1/4" Round P2PC CM Red Slim Profile	6 LED	$	7.49
M09410RAS-X	1 1/4" Round Red Auxilliary Low Profile STT / CM P2 Only 10pc Bulk Pack	6 LED	$	-
M09410WCL	1 1/4" Round White Slim Profile Courtesy Light	6 LED	$	8.84
M09410Y	1 1/4" Round P2PC CM Amber Slim Profile	6 LED	$	7.49
M09411R-X	1 1/4" Round P2PC CM Red Low Profile Wide Channel Grommet 10 pc Pack	6 LED	$	-
M09411Y-X	1 1/4" Round P2PC CM Amber Low Profile Wide Channel Grommet 10pc Pack	6 LED	$	-
M09424Y-X	1 1/4" Round P2PC CM Amber 24VDC Only Bulk Pack	6 LED	$	8.44
M11201R	2 1/2" Beehive Red	13 LED	$	6.01
M11201Y	2 1/2" Beehive Amber	13 LED	$	6.01
M11256R	2 1/2" Round Reflector CM Red	1 LED	$	4.66
M11256Y	2 1/2" Round Reflector CM Amber	1 LED	$	4.66
M11260R-X	2 1/2" Round Combination P2PC Red 50 Unit Bulk Pack Only	7 LED		#VALUE!
M11260Y-X	2 1/2" Round Combination P2PC Amber 50 Unit Bulk Pack Only	7 LED		#VALUE!
M11300R	2 1/2" Round Red	13 LED	$	6.01
M11300RAS	2 1/2" Round Red Auxiliary STT	3 LED	$	7.09
M11300RCL	2 1/2" Round Red Clear Lens	13 LED	$	6.01
M11300R-DV	2 1/2" Round Red Dual Voltage 12/24 VDC	13 LED	$	8.03
M11300WCL	2 1/2" Round White Interior Courtesy	13 LED	$	13.43
M11300Y	2 1/2" Round Amber	13 LED	$	6.01
M11300YAT	2 1/2" Round Amber Auxiliary Park Turn	3 LED	$	7.09
M11300YCL	2 1/2" Round Amber Clear Lens	13 LED	$	6.01
M11300Y-DV	2 1/2" Round Amber Dual Voltage 12/24 VDC	13 LED	$	8.03
M11303R	2 1/2" Round Red Stainless Steel ID Bar	39 LED	$	21.53
M11350RCL-X	2 1/2" Round Red Clear Lens - OEM Bulk 50 Pack	7 LED		#VALUE!
M11350R-X	2 1/2" Round Red - OEM Bulk 50 Pack	7 LED		#VALUE!
M11350Y-X	2 1/2" Round Amber - OEM Bulk 50 Pack	7 LED		#VALUE!

M16280ABS	2 1/2" Round ABS Amber Vantage Series	8 LED	$	5.39
M16280R	2 1/2" Round Red Vantage Series	8 LED	$	5.39
M16280RCL	2 1/2" Round Red Clear Lens Vantage Series	8 LED	$	5.39
M16280R-X	2 1/2" Round Red Vantage Series 50 Unit Bulk Pack Only	8 LED		#VALUE!
M16280Y	2 1/2" Round Amber Vantage Series	8 LED	$	5.39
M16280YCL	2 1/2" Round Amber Clear Lens Vantage Series	8 LED	$	5.39
M16280Y-X	2 1/2" Round Amber Vantage Series 50 Unit Bulk Pack Only	8 LED		#VALUE!
M16800R	2 1/2" Beehive Red Vantage Series	8 LED	$	6.08
M16800Y	2 1/2" Beehive Amber Vantage Series	8 LED	$	6.08
M16800YCL	2 1/2" Beehive Amber Clear Lens Vantage Series	8 LED	$	6.08
M20311R	Tri-Angle Cab Red Combination - P2PC	15 LED	$	8.03
M20311Y	Tri-Angle Cab Amber Combination - P2PC	15 LED	$	8.03
M20320R	1X2.5 Rectangular CM Red	8 LED	$	5.39
M20320RCL	1X2.5 Rectangular CM Red Clear Lens	8 LED	$	5.39
M20320Y	1X2.5 Rectangle CM Amber	8 LED	$	5.39
M20320YCL	1X2.5 Rectangular CM Amber Clear Lens	8 LED	$	5.39
M20321R	Rectangular CM w/ Chrome Trim Red	6 LED	$	6.74
M20321Y	Rectangular CM w/ Chrome Trim Amber	6 LED	$	6.74
M20323R	Stainless ID Bar Red (3) M20320R w/ 12" Leads	24 LED	$	21.53
M20325	Chrome Base Mount for M20320 Single Lead		$	1.22
M20326	Black Base Mount for M20320 Single Lead		$	0.81
M20327	Black Base Mount Twin Lead for M20320		$	1.22
M20328	Chrome Base Mount Twin Lead for M20320		$	1.22
M20330R	2X6 Rectangular Red - Reflector Lens	8 LED	$	8.03
M20330Y	2X6 Rectangular Amber - Reflector Lens	8 LED	$	8.03
M20332R	Clearance Marker Red - For Peterbilt	12 LED	$	8.78
M20332RCL	Clearance Marker Red Clear Lens - For Peterbilt	12 LED	$	8.78
M20332Y	Clearance Marker Amber - For Peterbilt	12 LED	$	8.78
M20332YCL	Clearance Marker Amber Clear Lens - For Peterbilt	12 LED	$	8.78
M20340R	Thin-Line Red	7 LED	$	5.39
M20340Y	Thin-Line Amber	7 LED	$	5.39
M20341R	Thin-Line 4" X 5/8" Rectangular Red Lightning P2PC CM	7 LED	$	6.01
M20341RCL	Thin-Line 4" X 5/8" Rectangular Red Clear Lens Lightning P2PC CM	7 LED	$	6.01
M20341WCL	Thin-Line 4" X 5/8" Rectangular White Lightning Interior Courtesy	7 LED	$	6.68
M20341Y	Thin-Line 4" X 5/8" Rectangular Amber Lightning P2PC CM	7 LED	$	6.01
M20341YCL	Thin-Line 4" X 5/8" Rectangular Amber Clear Lens Lightning P2PC CM	7 LED	$	6.01
M20342R-X	Thin-Line Red Lightning P2PC - Twin .180 Bullet Connectors Bulk Only	7 LED	$	6.01
M20342Y-X	Thin-Line Amber Lightning P2PC - Twin .180 Bullet Connectors Bulk Only	7 LED	$	6.01
M20343R	Aluminum ID Bar Red (3) M20340R w/ 12" Leads	21 LED	$	22.21
M20343RCL	Aluminum ID Bar Red Clear Lens (3) M20340RCL w/ 12" Leads	21 LED	$	22.21
M20343Y	Aluminum ID Bar Amber (3) M20340Y w/ 12" Leads	21 LED	$	22.21
M20343YCL	Aluminum ID Bar Amber Clear Lens (3) M20340YCL w/ 12" Leads	21 LED	$	22.21
M20344CH-RCL	Lightning Oval Chrome Red Clear Lens Clearance Marker	9 LED	$	12.76
M20344CH-WCL	Lightning Oval Chrome White Clear Lens Courtesy Light	9 LED	$	12.76
M20344CH-YCL	Lightning Oval Chrome Amber Clear Lens Clearance Marker	9 LED	$	12.76
M20344CH-Y	Lightning Oval Chrome Amber Clearance Marker	9 LED	$	12.76
M20344-Tape	Adhesive Mounting Tape for M20344 Series	NA	$	2.63
M20350R	2-Pin 1X4 CM Red	12 LED	$	6.74
M20350RCL	2-Pin 1X4 CM Red Clear Lens	12 LED	$	6.74
M20350RY	Dual Color 2-Pin 1X4 CM Red / Amber	8 LED	$	6.74
M20350Y	2-Pin 1X4 CM Amber	12 LED	$	6.74
M20350YCL	2-Pin 1X4 CM Amber Clear Lens	12 LED	$	6.74
M20355	Chrome Base Mount for M20350 Single Lead		$	1.89
M20356	Black Base Mount for M20350 Single Lead		$	1.89
M20357	Black Base Mount Twin Lead for M20350		$	1.89
M20358	Chrome Base Mount Twin Lead for M20350		$	1.89
M20361R	Red Flush Mount Cab Marker - Freightliner	6 LED	$	7.43
M20361RCL	Red Clear Lens Flush Mount Cab Marker Freightliner	6 LED	$	7.43
M20361Y	Amber Flush Mount Cab Marker - Freightliner	6 LED	$	7.43
M20361YCL	Amber Clear Lens Flush Mount Cab Marker Freightliner	6 LED	$	7.43
M20372BCL	**DISCONTINUED**		$	-

M20372BRCL-4	12 LED Emergency Light Bar 2 Red / 2 Blue M20372 Series	12 LED	$	215.93
M20372BRCL-8	24 LED Emergency Light Bar 4 Red / 4 Blue M20372 Series	24 LED	$	349.65
M20374PMK	Pipe Mount Kit for M20385 Series		$	13.43
M20378Y	8 Head LED Amber Traffic Director with Controller & 15' Cable	24 LED	$	345.53
M20378Y-15EXT	15 Foot Extension Cable for M20378Y	NA	$	37.73
M20378Y-30	8 Head LED Amber Traffic Director with Controller & 30ft Cable	24 LED	$	360.38
M20379BCL	Blue 6 LED Micro Warning Light w/ Cable	6 LED	$	53.93
M20379RCL	Red 6 LED Micro Warning Light w/ Cable	6 LED	$	53.93
M20379WCL	White 6 LED Micro Warning Light w/ Cable	6 LED	$	53.93
M20379YCL	Amber 6 LED Micro Warning Light w/ Cable	6 LED	$	53.93
M20380BCL-SP	Blue 3 LED Micro Warning Light Class 1 w/ Cable	3 LED	$	60.68
M20380RCL-SP	Red 3 LED Micro Warning Light Class 1 w/ Cable	3 LED	$	60.68
M20380WCL-SP	White 3 LED Micro Warning Light Class 1 w/ Cable	3 LED	$	60.68
M20380YCL-SP	Amber 3 LED Micro Warning Light Class 1 w/ Cable	3 LED	$	60.68
M20383BCL	Thin Low Profile 3 LED Blue Clear Lens Warning Surface Mount Black Bezel	3 LED	$	32.33
M20383RCL	Thin Low Profile 3 LED Red Clear Lens Warning Surface Mount Black Bezel	3 LED	$	32.33
M20383WCL	Thin Low Profile 3 LED White Clear Lens Warning Surface Mount Black Bezel	3 LED	$	32.33
M20383YCL	Thin Low Profile 3 LED Amber Clear Lens Warning Surface Mount Black Bezel	3 LED	$	32.33
M20383YCL-X	Thin Low Profile 3 LED Amber Clear Lens Warning Surface Mount Bulk	3 LED		#VALUE!
M20384BCL	Ultra Thin Low Profile 4 LED Blue Clear Lens Warning Surface Mount Black Bezel	4 LED	$	37.06
M20384BRCL	Ultra Thin Low Profile 4 LED Blue / Red Clear Lens Warning Surface Mount Black Bezel	4 LED	$	37.06
M20384BWCL	Ultra Thin Low Profile 4 LED Blue / White Clear Lens Warning Surface Mount Black Bezel	4 LED	$	37.06
M20384GYCL	Ultra Thin Low Profile 4 LED Green / Amber Clear Lens Warning Surface Mount Black Bez	4 LED	$	40.43
M20384RCL	Ultra Thin Low Profile 4 LED Red Clear Lens Warning Surface Mount Black Bezel	4 LED	$	37.06
M20384RWCL	Ultra Thin Low Profile 4 LED Red / White Clear Lens Warning Surface Mount Black Bezel	4 LED	$	37.06
M20384WCL	Ultra Thin Low Profile 4 LED White Clear Lens Warning Surface Mount Black Bezel	4 LED	$	37.06
M20384WYCL	Ultra Thin Low Profile 4 LED White / Amber Clear Lens Warning Surface Mount Black Bez	4 LED	$	37.06
M20384YCL	Ultra Thin Low Profile 4 LED Amber Clear Lens Warning Surface Mount Black Bezel	4 LED	$	37.06
M20384YCL	Ultra Thin Low Profile 4 LED Amber Clear Lens Warning Surface Mount Black Bezel	4 LED	$	36.65
M20386BCL	6 LED Blue Clear Lens Warning Surface Mount 12/24 VDC	6 LED	$	64.06
M20386BRCL	6 LED Blue / Red Clear Lens Warning Surface Mount 12/24 VDC	6 LED	$	64.06
M20386RCL	6 LED Red Clear Lens Warning Surface Mount 12/24 VDC	6 LED	$	64.06
M20386RWCL	6 LED Red / White Clear Lens Warning Surface Mount 12/24 VDC	6 LED	$	64.06
M20386WCL	6 LED White Strobe Surface Mount 12/24 VDC	6 LED	$	64.06
M20386WYCL	6 LED White / Amber Clear Lens Warning Surface Mount 12/24 VDC	6 LED	$	64.06
M20386YCL	6 LED Amber Clear Lens Warning Surface Mount 12/24 VDC	6 LED	$	64.06
M20387YCL	9 LED Amber Warning Beacon - Surface Mount w/ M20383YCL	9 LED	$	121.43
M20391R	2X6 Rectangular Reflector P2PC CM Red	7 LED	$	7.43
M20391R-X	2X6 Rectangular Reflector P2PC CM Red (10) Bulk Pack	7 LED	$	-
M20391Y	2X6 Rectangular Reflector P2PC CM Amber	7 LED	$	7.43
M20391Y-X	2X6 Rectangular Reflector P2PC CM Amber (10) Bulk Pack	7 LED	$	-
M20395R	2X6 Rectangular No Reflector P2PC CM Red	18 LED	$	9.38
M20395Y	2X6 Rectangular No Reflector P2PC CM Amber	18 LED	$	9.38
M23015R	Rectangular Red Combination P2PC	14 LED	$	8.03
M23015R-X	Rectangular Red Combination P2PC Bulk Pack Only	14 LED		#VALUE!
M23015R-5	Stainless 2" Tow Hitch ID Bar with (5) M23015R	70 LED	$	67.43
M23015RCL	Rectangular Red Clear Lens Combination P2PC	14 LED	$	8.03
M23015R-DV	Rectangular Red Combination P2PC 12/24 VDC	14 LED	$	9.79
M23015Y	Rectangular Amber Combination P2PC	14 LED	$	8.03
M23015Y-X	Rectangular Amber Combination P2PC	14 LED		#VALUE!
M23015YCL	Rectangular Amber Clear Lens Combination P2PC	14 LED	$	8.03
M23015Y-DV	Rectangular Amber Combination P2PC 12/24 VDC	14 LED	$	9.79
M27005-BEZ	Chrome Plastic Bezel Only for M27005 Series		$	1.28
M27005R	Stainless Steel Pete Light - Oval CM Red	15 LED	$	8.03
M27005RCL	Stainless Steel Pete Light - Oval CM Red Clear Lens	15 LED	$	8.03
M27005Y	Stainless Steel Pete Light - Oval CM Amber	15 LED	$	8.03
M27005YCL	Stainless Steel Pete Light - Oval CM Amber Clear Lens	15 LED	$	8.03
M27011Y	Chrome Cab Marker Amber	8 LED	$	22.88
M27011YCL	Chrome Cab Marker Amber Clear Lens	8 LED	$	22.88
M27340R	2.25X5.0 Red - Bus CM	12 LED	$	8.78
M27340Y	2.25X5.0 Amber - Bus CM	12 LED	$	8.78

M30332R	**2"X6" Clearence Marker Red Chrome Bezel P2**	**12 LED**	$	9.59
M30332Y	**2"X6" Clearence Marker Amber Chrome Bezel P2**	**12 LED**	$	9.59
M34260R	2" Round Red Vantage Series	6 LED	$	5.39
M34260RCL	2" Round Red Clear Lens Vantage Series	6 LED	$	5.39
M34260R-X	2" Round Red Vantage Series 50 Unit Bulk Pack Only	6 LED		#VALUE!
M34260Y	2" Round Amber Vantage Series	6 LED	$	5.39
M34260YCL	2" Round Amber Clear Lens Vantage Series	6 LED	$	5.39
M34260Y-X	2" Round Amber Vantage Series 50 Unit Bulk Pack Only	6 LED		#VALUE!
M34600R	2" Beehive Red Vantage Series	6 LED	$	5.39
M34600RCL	2" Beehive Red Clear Lens Vantage Series	6 LED	$	5.39
M34600Y	2" Beehive Amber Vantage Series	6 LED	$	5.39
M34600YCL	2" Beehive Amber Clear Lens Vantage Series	6 LED	$	5.39
M36180-BEZ	**DISCONTINUED**		$	-
M36180R	Stainless Steel Mini-Oval CM Red	7 LED	$	6.01
M36180RCL	Stainless Steel Mini-Oval CM Red Clear Lens	7 LED	$	6.01
M36180WCL	Stainless Steel Mini-Oval White Interior Courtesy	7 LED	$	12.08
M36180Y	Stainless Steel Mini-Oval CM Amber	7 LED	$	6.01
M36180YCL	Stainless Steel Mini-Oval CM Amber Clear Lens	7 LED	$	6.01
M42100R	4" Round Red STT	44 LED	$	18.16
M42100Y	4" Round Amber Park / Rear Turn	48 LED	$	26.93
M42120R	4" Round Red STT / Gray Flange Version of M42100R	44 LED	$	18.83
M42201R	Rectangular Red STT	44 LED	$	19.51
M42201Y	Rectangular Amber Park / Front Turn	44 LED	$	21.53
M42206	Rectangular White Combo Interior Courtesy & Back-Up Light	14 LED	$	18.16
M42206-Adhesive	Adhesive Mounting Tape for M42206 Series		$	2.63
M42206R	Rectangular Red Low Profile Surface Mount STT	14 LED	$	12.08
M42206R-X	Rectangular Red Low Profile Surface Mount STT 50pc Bulk	14 LED	$	-
M42206	Rectangular White Combo Interior Courtesy & Back-Up Light	14 LED	$	18.16
M42206-X	Rectangular White Combo Interior Courtesy & Back-Up Light	14 LED	$	-
M42206Y	Rectangular Amber Low Profile Surface Mount Park Rear Turn	14 LED	$	12.08
M42206Y-X	Rectangular Amber Low Profile Surface Mount Park Rear Turn 50pc Bulk	14 LED	$	-
M42210R	**DISCONTINUED**		$	-
M42210Y	**DISCONTINUED**		$	-
M42213	Rectangular Back-Up Lightning Series	18 LED	$	30.31
M42213R	Rectangular Red STT Lightning Series	9 LED	$	11.00
M42213RCL	Rectangular Red Clear Lens STT Lightning Series	9 LED	$	11.00
M42213Y	Rectangular Amber Park Front Turn Lightning Series	15 LED	$	19.51
M42213YCL	Rectangular Amber Clear Lens Park Front Turn Lightning Series	15 LED	$	19.51
M42220	Three Stud LED Box Style Multi Function Light - STT / BU	38 LED	$	49.88
M42221	**Three Stud LED Thin Profile Box Style Multi Function Light - STT / BU**	**19 LED**	$	40.43
M42320R	4" Round Red STT Vantage	32 LED	$	14.11
M42321	4" Round Surface Mount White Back-Up Lightning Series	18 LED	$	30.31
M42321R	4" Round Red STT LIGHTNING Surface Mount Series	9 LED	$	11.00
M42322R	4" Round Red STT LIGHTNING	9 LED	$	11.00
M42322RCL	4" Round Red Clear Lens STT LIGHTNING	9 LED	$	11.00
M42322R-DV	4" Round Red STT LIGHTNING Dual Voltage 12/24 VDC	9 LED	$	12.08
M42322R-X	4" Round Red STT LIGHTNING 10 Unit Bulk Pack Only	9 LED		#VALUE!
M42322Y	4" Round Amber PFT LIGHTNING	15 LED	$	19.51
M42322YCL	4" Round Amber Clear Lens PFT LIGHTNING	15 LED	$	19.51
M42323R	4" Round Red STT LIGHTNING Flange Mount	9 LED	$	11.81
M42324	4" Round Back-Up Lightning Series	18 LED	$	30.31
M42324-DV	4" Round Back-Up Lightning Series Dual Voltage 12/24 VDC	18 LED	$	30.31
M42324-X	4" Round Back-Up Lightning Series Bulk Pack	18 LED	$	-
M42339Y	4" Round Amber PRT Lightning Series	9 LED	$	11.81
M42339Y-DV	4" Round Amber PRT Lightning Series Dual Voltage 12/24 VDC	9 LED	$	13.43
M42341R/Y	LightningS Chrome Round Red / Amber Pedestal Light	30 LED	$	40.43
M42341RYCL	LightningS Chrome Round Red / Amber Clear Lens Pedestal Light	30 LED	$	40.43
M42341Y/Y	LightningS Chrome Round Amber / Amber Pedestal Light	30 LED	$	40.43
M42344R	**4" Round LightningS Red STT Grommet Mount DRY FIT Connector**	**6 LED**	$	8.30
M42344R-X	**4" Round LightningS Red STT Grommet DRY FIT OEM Bulk Pack**	**6 LED**		#VALUE!
M42346R	**4" Round Red LightningS Series STT**	**6 LED**	$	7.90

M42346R-X	**4" Round Red LightningS Series STT OEM Bulk Pack**	**6 LED**	#VALUE!
M42347	4" Round Back-Up LightningS Series	9 LED	$ 20.18
M42347-X	4" Round Back-Up LightningS Series OEM Bulk Pack	9 LED	#VALUE!
M42348	4" Round LightningS Back-Up Grommet Mount DRY FIT Connector	9 LED	$ 21.53
M42348-X	4" Round LightningS Back-Up Grommet DRY FIT OEM Bulk Pack	9 LED	#VALUE!
M42354R	4" Round LightningS STT Flange Mount with Reflector / PL-3 Bulk Pack	7 LED	$ 13.43
M42354R-X	4" Round LightningS STT Flange Mount with Reflector / PL-3 Bulk Pack	7 LED	#VALUE!
M42354-X	4" Round LightningS White Back-Up Flange Mount PL-3	10 LED	$ 20.18
M42354Y-X	4" Round LightningS Amber Park Rear Turn Flange Mount / PL-3 Bulk Pack	7 LED	#VALUE!
M42355R	4" Round LightningS STT Flange Mount with Reflector / Dry-Fit	7 LED	$ 13.43
M42355R-X	4" Round LightningS STT Flange Mount with Reflector / Dry-Fit Bulk Pack	7 LED	#VALUE!
M42360R/Y-A	Square Chrome Red / Amber STT / PFT Pedestal LH Single Post	23 LED	$ 39.83
M42361R/Y	Square Chrome Red / Amber STT / PFT Pedestal RH Single Post	23 LED	$ 39.83
M42362R/Y-A	Square Chrome Red / Amber STT / PFT Pedestal LH Double Post	26 LED	$ 39.83
M42362RYCL-A	Square Chrome Red / Amber Clear Lens Pedestal LH Double Post	26 LED	$ 39.83
M42363R/Y-A	Square Chrome Red / Amber STT / PFT Pedestal RH Double Post	26 LED	$ 39.83
M42363RYCL-A	Square Chrome Red / Amber Clear Lens Pedestal RH Double Post	26 LED	$ 39.83
M42365	Low Profile Thin 4" Round White Back-Up Surface Mount PL-3	9 LED	$ 21.53
M42365R	Low Profile Thin 4" Round Red STT Surface Mount PL-3	9 LED	$ 14.24
M42365R-X	**Low Profile Thin 4" Round Red STT Surface Mount PL-3 No Gasket,Screws or Caps**	**9 LED**	$ -
M42365-Tape	Double Sided Adhesive Mounting Tape		$ 2.63
M42365Y	Low Profile Thin 4" Round Amber Park Rear Turn Surface Mount	9 LED	$ 16.94
M42500Y	Gorilla 4" Round Park / Rear Turn 12 VDC Amber	40 LED	$ 28.28
M42701BCL	4" Round Blue LED Warning Light - 7 Selectable Patterns/ 1 Steady 12/24VDC	24 LED	$ 33.68
M42701R	4" Round Red LED Warning Light - 7 Selectable Patterns / 1 Steady 12/24VDC	24 LED	$ 29.63
M42701WCL	4" Round White LED Warning Light - 7 Selectable Patterns / 1 Steady 12/24VDC	24 LED	$ 33.68
M42701Y	4" Round Amber LED Warning Light - 7 Selectable Patterns / 1 Steady 12/24VDC	24 LED	$ 29.63
M42701YCL	4" Round Amber Clear Lens LED Warning Light - 7 Selectable / 1 Steady 12/24VDC	24 LED	$ 29.63
M42705W	White LED Warning Beacon 5" 12 - 80 VDC	3 LED	$ 53.93
M42705Y	Amber LED Warning Beacon 5" 12 - 80 VDC	3 LED	$ 53.93
M43253	4" Round Stainless Steel Security Flange		$ 4.39
M43253CH	4" Round Stainless Steel Security Flange Chrome Finish		$ 5.06
M43900	4" Round Mounting Kit - Grommet & Connector		$ 2.23
M49700	Rectangular Black Vinyl Grommet		$ 1.34
M49702	Rectangular Snap - On Stainless Steel Security Flange		$ 5.39
M49705	Rectangular Chrome Plastic Grommet Cover		$ 3.71
M50100-B	2 1/2" Black Vinyl Grommet		$ 0.80
M50100-X	2 1/2" Black Vinyl Grommet - 50 Piece Bulk Pack		#VALUE!
M50102-X	2 1/2" Black Vinyl Grommet Closed Back - 50 Piece Bulk Pack		#VALUE!
M50103	2 1/2" Stainless Steel Security Flange		$ 3.98
M50105	2 1/2" Chrome Plastic Grommet Cover		$ 2.16
M50110	Black Vinyl Grommet for M20372		$ 5.74
M50111	Chrome Plastic Bezel for M20372		$ 5.39
M50112	Stainless Steel Grommet Cover for M09300 Series		$ 1.34
M50113	Black Vinyl Grommet for M20373 Strobe Series		$ 5.74
M50114	Chrome Plastic Bezel for M20373 Strobe Series		$ 5.39
M50115	Stainless Steel Mounting Bracket for M20383		$ 6.68
M50116	Stainless Steel Mounting Bracket for M20384		$ 7.43
M50118	1 1/4" Stainless Steel Grommet Cover for M09400 Series		$ 1.69
M50120	Chrome Plastic Bezel for M20375 Series		$ 5.39
M50121	Stainless Steel Mounting Bracket for M20386 Series		$ 10.06
M50122	Black Vinyl Large 3/16" Channel Grommet for M20372 Series		$ 5.74
M50123	Black Vinyl Large 3/16" Channel Grommet for M20373 Series		$ 5.74
M50124	Stainless Steel Grommet Cover for MWL-10SP		$ 3.31
M50125	Wide Channel 3/8" Grommet for M09300 Series		$ 1.15
M50126	Swivel Mount Bracket for MWL-13 / MWL-14		$ 16.88
M50129	Snap-On Chrome Bezel for M84405-B & M84406-B		$ 4.66
M50130	Mounting Kit for MLS Single Row Strip Lights 3 Tabs / 6 Screws		$ 1.47
M50131	Mounting Spacer Kit for Undercarraige Series 2 Gaskets / 4 Screws		$ 2.15
M50132	1 1/4" Black Vinyl Grommet for M09400 Series		$ 1.34
M50133	Black Vinyl Grommet for M09300 Series		$ 0.34

M50134	MWL-25SP Work Light Display Mounting Bracket		#VALUE!
M50135	3" Chrome Plastic Snap-On Bezel for M84441		$ 2.01
M50136	5.50" Chrome Plastic Snap-On Bezel for M84442 / M84443		$ 3.36
M50137	Chrome Bezel for M20383 Series		$ 5.39
M50138	Chrome Bezel for M20384 Series		$ 5.39
M50139	Chrome Bezel for M20386 Series		$ 5.39
M50140	Adhesive Mounting Gasket for MWL-33 - Gasket Only		$ 1.69
M50141	Black Vinyl Grommet for M20383 Series		$ 5.74
M50142	Black Vinyl 3/16" Wide Channel Grommet for M20383 Series		$ 5.74
M50143	Black Vinyl Grommet for M20384 Series		$ 5.74
M50144	Black Vinyl 3/16" Wide Channel Grommet for M20384 Series		$ 5.74
M50145	Black Vinyl Grommet for M20386 Series		$ 6.08
M50146	**Stainless Steel Bezel for M63353R&Y Series Warning**		$ 6.68
M50300-B	2" Black Vinyl Grommet		$ 0.80
M50300-X	2" Black Vinyl Grommet - 50 Piece Bulk Pack		#VALUE!
M50303	2" Stainless Steel Security Flange		$ 3.98
M50305	2" Chrome Plastic Grommet Cover		$ 2.03
M50310	Chrome Metal Brush Guard for M23015		$ 3.98
M50311	Chrome Plastic Bezel for M23015		$ 2.36
M50312	Aluminum Brush Guard for M20340R/Y		$ 3.98
M50400-B	4" Black Vinyl Grommet		$ 1.20
M50400-X	4" Black Vinyl Grommet 50 Piece Bulk Pack		#VALUE!
M50405	4" Round Chrome Plastic Grommet Cover		$ 3.71
M50410	4" Chrome Stainless Dress Ring for 4" Round Lights		$ 5.33
M50411	4" Black Vinyl Grommet for MWL-12		$ 1.96
M50412	Angled 4" Black Vinyl Grommet for MWL-12		$ 2.36
M50413	Angled 2" Black Vinyl Grommet for MWL-10SP		$ 2.36
M50600-B	Oval Black Vinyl Grommet		$ 1.20
M50600-X	Oval Black Vinyl Grommet 50 Piece Bulk Pack		#VALUE!
M50605	Oval Chrome Plastic Grommet Cover		$ 3.71
M50606-X	Oval Low Profile Black Vinyl Grommet		$ -
M50607	Oval Black Vinyl Grommet for M63350 Series		$ 1.07
M50700-X	Dual 3-Pin Straight PL-3 72" Blunt Cut Harness 50 Pack Only		$ -
M50900	3-Pin Right Angle STT Plug 10" Leads		$ 1.34
M50900-100	3-Pin 12" Lead Continuous Wiring Harness - 100 Per Roll		$ 121.43
M50900-X	3-Pin Right Angle STT Plug 10" Leads OEM 50 Pack		#VALUE!
M50901	3-Pin Male / Female 6" Extension Harness		$ 2.57
M50902	Yellow Silicon Protective Cover for M50900 Connector		$ 0.61
M50904	3-Pin Male to Male Grote Adapter Harness		$ 2.90
M50905	3-Pin LED Load Equalizer		$ 10.73
M50908	DRY FIT STT Connector		$ 2.96
M50909	24/12VDC Step Down Module 1 Amp Rated		$ 10.73
M50910	LED Flasher Control Module		$ 26.93
M50911	3-Pin Straight PL-3 Plug 10" Leads		$ 1.34
M50913	24/12VDC Step Down Module 2 Amp Rated		$ 16.81
M50914	Head Light Load Equalizer Module 36" Lead for 4X6 LL/LO/HI		$ 12.76
M50915	Head Light Load Equalizer Module 36" Lead for 7"/5"X7"		$ 12.76
M50916	3-Pin OEM Connector for M63123Y/YCL		$ 3.31
M50950	2-Pin Right Angle CM Plug 6" Leads		$ 1.20
M50950A-100	2-Pin 12" Lead Continuous Wiring Harness - 100 Per Roll		$ 94.43
M50950A-200	2-Pin 6" Lead Continuous Wiring Harness - 200 Per Roll		$ 134.93
M50950-X	2-Pin Right Angle CM Plug 6" Leads OEM 50 Pack		#VALUE!
M50950-X18	2-Pin Right Angle CM Plug 18" Blunt Cut Leads 50 Bulk Pack		#VALUE!
M50951	2-Pin Right Angle CM Plug 2 Male .180 Bullets Connectors		$ 1.34
M50951A-100	2-Pin 18" Lead Continuous Wiring Harness - 100 Per Roll		$ 107.93
M50953	DRY FIT 2-Pin CM Connector		$ 2.55
M50960-100	Twin Female .180 Bullet 12" Lead Continuous Wiring Harness - 100 Per Roll		$ 121.43
M50960-50	Twin Female .180 Bullet Continuous Wiring Harness - 50 Per Roll		$ 67.43
M50960-5024	Twin Female .180 Bullet 24" Lead Wiring Harness - 50 Per Roll		$ 80.93
M56100R	4" Round Red STT	56 LED	$ 24.23
M63100R	Oval Red STT	60 LED	$ 24.30

M63100Y	Oval Amber Park / Clearance / Aux Turn	60 LED	$	27.00
M63120Y	Oval Amber Side Turn / Side Marker	18 LED	$	60.75
M63121Y	Oval Amber Side Turn / Side Marker	28 LED	$	24.23
M63122CH-YCL	Oval Amber Chrome Clear Lens Side Turn / Side Marker - Peterbilt Replacement	9 LED	$	14.11
M63122Y	Oval Amber Side Turn / Side Marker - Peterbilt Replacement	9 LED	$	12.08
M63122YCL	Oval Amber Clear Lens Side Turn / Side Marker - Peterbilt Replacement	9 LED	$	12.08
M63123Y	**Oval Amber Side Turn / Side Marker - Freightliner Replacement**	**7 LED**	$	26.93
M63123YCL	**Oval Amber Clear Lens Side Turn / Side Marker - Freightliner Replacement**	**7 LED**	$	26.93
M63124Y	Oval Amber Side Turn / Side Marker	12 LED	$	20.86
M63201BCL	Oval Blue Clear Lens Thin Profile LED Warning 7 Selectable / 1 Steady 12/24VDC	24 LED	$	33.68
M63201R	Oval Red Thin Profile LED Warning 7 Selectable / 1 Steady 12/24VDC	24 LED	$	29.63
M63201WCL	Oval White Thin Profile LED Warning 7 Selectable / 1 Steady 12/24VDC	24 LED	$	33.68
M63201Y	Oval Amber Thin Profile LED Warning 7 Selectable / 1 Steady 12/24VDC	24 LED	$	29.63
M63201YCL	Oval Amber Clear Lens Thin Profile LED Warning 7 Selectable / 1 Steady 12/24VDC	24 LED	$	29.63
M63253	Snap - On Oval PC Flange for 63 Series - Gray		$	2.50
M63253BLK	Snap - On Oval PC Flange for 63 Series - Black		$	2.50
M63253CH	Snap - On Oval PC Flange for 63 Series - Chrome		$	3.71
M63254	Snap - On Oval Stainless Steel Flange for 63 Series - Chrome		$	5.33
M63318-A	Surface Mount White Back Strip Light	19 LED	$	30.31
M63318R-A	Surface Mount Red STT Strip Light	10 LED	$	13.43
M63318R-A-GSKT	10 LED Red STT Surface Mount Strip Light w/ Gasket	10 LED	$	15.39
M63318RCL-A	Surface Mount Red Clear Lens STT Strip Light	10 LED	$	13.43
M63318Y-A	Surface Mount Amber Park Rear Turn Strip Light	10 LED	$	20.18
M63318YCL-A	Surface Mount Amber Clear Lens Park Rear Turn Strip Light	10 LED	$	20.18
M63319R	**Surface Mount ID Bar/CHMSL Center High Mount Stop Light - Poly Bag**	**9 LED**	$	13.43
M63320	Oval White Back-Up Surface Mount Lightning Series	18 LED	$	30.31
M63320R	**Oval Red Surface Mount STT Lightning Series**	**9 LED**	$	8.71
M63320RCL	Oval Red Clear Lens Surface Mount STT Lightning Series	9 LED	$	11.00
M63320Y	15 LED Oval Amber Park Front Rear Turn Surface Mount Lightning Series	15 LED	$	21.53
M63321R-X	Oval Red Surface Mount STT Lightning Series PL-3 Pig Tail Connector	9 LED	$	12.76
M63322R	Oval Red STT LIGHTNING	9 LED	$	11.00
M63322RCL	Oval Red Clear Lens STT LIGHTNING	9 LED	$	11.00
M63322R-DV	Oval Red STT LIGHTNING Dual Voltage 12/24 VDC	9 LED	$	12.08
M63322R-X	Oval Red STT LIGHTNING 10 Unit Bulk Pack Only	9 LED		#VALUE!
M63322Y	Oval Amber PFT LIGHTNING	15 LED	$	19.51
M63322YCL	Oval Amber Clear Lens PFT LIGHTNING	15 LED	$	19.51
M63323R	Oval Red STT Lightning Flange Mount	9 LED	$	11.14
M63323Y	Oval Amber PFT Lightning Flange Mount	15 LED	$	20.18
M63323YCL	Oval Amber Clear Lens PFT Lightning Flange Mount	15 LED	$	20.18
M63324	Oval White Back-Up Lightning Series	18 LED	$	30.31
M63324-X	Oval White Back-Up Lightning Series Bulk Pack	18 LED	$	-
M63326DF-X	18 LED Oval Surface Mount Back-Up Lightning Series Dry Fit Connector	18 LED	$	32.33
M63326RDF-X	**9 LED Oval Red STT Surface Mount Lightning Series Dry Fit Connector**	**9 LED**	$	10.06
M63326YDF-X	15 LED Oval Amber PFRT Surface Mount Lightning Series Dry Fit Connector	15 LED	$	23.56
M63339Y	Oval Amber PRT Lightning Series	9 LED	$	11.14
M63339YCL	Oval Amber Clear Lens PRT Lightning Series	9 LED	$	11.14
M63340YCL	Oval Amber Clear Lens PRT Lightning Series Flange Mount	9 LED	$	11.14
M63346R	**Oval Red LightningS Series STT**	**6 LED**	$	7.90
M63346R-X	**Oval Red LightningS Series STT OEM Bulk Pack**	**6 LED**		#VALUE!
M63347	Oval Back-Up LightningS Series	9 LED	$	20.18
M63347-X	Oval Back-Up LightningS Series OEM Bulk Pack	9 LED		#VALUE!
M63350	Oval White Combo Back-Up / Interior Courtesy Thin Profile Surface Mount	14 LED	$	19.51
M63350R	Oval Red STT Thin Profile Surface Mount	14 LED	$	13.43
M63350R-X	Oval Red STT Thin Profile Surface Mount Bulk Pack	14 LED	$	13.43
M63350-Tape	Adhesive Mounting Tape for M63350 Series		$	2.63
M63350-X	Oval White Combo Back-Up Interior Courtesy Thin Profile Surface Mount Bulk Pack	14 LED	$	-
M63350Y	Oval Amber Park Rear Turn Thin Profile Surface Mount	14 LED	$	13.43
M63350Y-X	Oval Amber Park Rear Turn Thin Profile Surface Mount Bulk Pack	14 LED	$	-
M63352R-36X	Oval Red STT Thin Profile Surface Mount 36" PL-3 Female Pig Tail Bulk Pack	14 LED	$	-
M63352R-X	Oval Red STT Thin Profile Surface Mount PL-3 Female Pig Tail Bulk Pack	14 LED	$	-
M63353WCL	**Oval White LIghtningS Thin Profile Surface Mount Warning**	**14 LED**	$	33.68

M63353R	**Oval Red LightningS Thin Profile Surface Mount Warning**	**14 LED**	$	33.68
M63353Y	**Oval Amber LightningS Thin Profile Surface Mount Warning**	**14 LED**	$	33.68
M63420R	Oval Red STT Vantage	42 LED	$	21.53
M63420Y	Oval Amber Vantage Park / Clearance / Aux Turn	42 LED	$	21.53
M72270R	Stainless Steel Oval CM Red	13 LED	$	9.38
M72270RCL	Stainless Steel Oval CM Red Clear Lens	13 LED	$	9.38
M72270R-DV	Stainless Steel Oval CM Red Dual Voltage 12/24 VDC	13 LED	$	9.92
M72270WCL	Stainless Steel Oval White Interior Courtesy	13 LED	$	18.83
M72270Y	Stainless Steel Oval CM Amber	13 LED	$	9.38
M72270YCL	Stainless Steel Oval CM Amber Clear Lens	13 LED	$	9.38
M72270Y-DV	Stainless Steel Oval CM Amber Dual Voltage 12/24 VDC	13 LED	$	9.92
M84400	LED Low Profile Cargo Light Surface Mount w/ On-Off Switch	50 LED	$	32.33
M84403-A	12" Type 1 Interior Cargo Light	6 LED	$	49.88
M84403-A-D	12" Type 1 Interior Cargo Light with OEM Connector	6 LED	$	52.58
M84404-A	6" Type 1 Interior Cargo Light	3 LED	$	33.68
M84405-C	5.50" LED Dome Light 325 Lumens	15 LED	$	22.21
M84406-C	5.50" LED Dome Light 450 Lumens	24 LED	$	26.26
M84407-B	3" X 6" Rectangular Interior Courtesy Light 200 Lumens	12 LED	$	16.81
M84408	Flush Mount Interior Cargo Light	28 LED	$	62.03
M84409	Flush Mount Interior Cargo Light - High Output	42 LED	$	74.25
M84410	Flush Mount Interior Light Black 3 Position Switch / OEM Connector	42 LED	$	101.25
M84411-B	4"X6" Flat Panel Series Interior Light - Black Finish	24 LED	$	64.73
M84412-B	4"X4" Flat Panel Series Interior Light - Black Finish	18 LED	$	56.63
M84414-BCW	2"X2" Flat Panel White Interior Light - Black Housing Cool White	12 LED	$	47.18
M84414-BWW	2"X2" Flat Panel White Interior Light - Black Housing Warm White	12 LED	$	47.18
M84415-A	**Flush Mount Interior Light 1,500 Lumens**	**66 LED**	$	94.43
M84416	Surface Mount Interior Light 1,500 Lumens	66 LED	$	84.98
M84417	Surface Mount Interior Cargo Light - 2,600 Lumen	90 LED	$	134.93
M84418	Surface Mount Interior Cargo Light 2,000 Lumen 12/24VDC		$	134.93
M84419-B	Undercarriage Surface Mount Light 18.3"	108 LED	$	53.93
M84420-B	Undercarriage Surface Mount Light 13"	36 LED	$	43.13
M84421-B	Undercarriage Surface Mount Light 24"	144 LED	$	67.43
M84422-B	Undercarriage Surface Mount Light 2.25"	12 LED	$	20.18
M84423-A	**DISCONTINUED**		$	-
M84423-B	**Rigid White Linear Interior Strip Light 19.3" 375 Lumen**	**53 LED**	$	25.58
M84424-A	**DISCONTINUED**		$	-
M84424-B	**Rigid White Linear Interior Strip Light 24" 500 Lumen**	**72 LED**	$	32.33
M84425-B	**Rigid White Interior Linear Strip Light 36" 500 Lumen**	**108 LED**	$	45.83
M84426	Surface Mount Interior Cargo Light - 1,275 Lumen 12/24VDC	216 LED	$	107.93
M84427	**DISCONTINUED**		$	-
M84427-A	3"X6" Rectangular Interior Courtesy Light - 530 Lumen	27 LED	$	22.88
M84428	6"X6" Flat Panel Series 500 Lumen Black Finish 12/24VDC	36 LED	$	53.93
M844280-A	18" Type 1 Cargo Light	9 LED	$	75.53
M844280-A-D	18" Type 1 Cargo Light with OEM Connector	9 LED	$	78.23
M844280B-CH	18" Cargo Light Type 1 600 Lumen Chrome Housing	54 LED	$	67.43
M844281	LED Cargo Light Type 2 Slim Profile	9 LED	$	80.93
M844282-A	LED Cargo Light Type 3 - Illuminated Hi / Low / Off Switch	36 LED	$	67.43
M84429	Rigid White Linear Strip Light 48" LED's	144 LED	$	60.68
M84429-B	**Rigid White Linear Strip Light 48" LED's 900 Lumens**	**144 LED**	$	57.31
M84433-A	**6.0" Dome Light - PIR Sensor 1,000 Lumen**	**42 LED**	$	74.18
M84434-A	**6.0" Dome Light - Three Position HI/OFF/LOWff Switch 1,200 Lumen**	**20 LED**	$	53.93
M84434RW	6.00" 24 LED Red / White Dome Light - 3 Position Switch	24 LED	$	53.93
M84435	**DISCONTINUED**		$	-
M84435-A	**6.0" LED Dome Light - Hard Wire- 42 LED 1,200 Lumen New Version**	**42 LED**	$	47.18
M84436	4" LED Grommet Mount Dome Light High Diode Count	24 LED	$	37.73
M84437	**DISCONTINUED**		$	-
M84438	21" Low Profile Interior Light - 1,000 Lumens - Maxx-Touch On/Off Switch	64 LED	$	90.38
M84439	Flush Mount Interior Cargo Light - 800 Lumen	48 LED	$	53.93
M84440	Surface Mount Interior Cargo Light - 800 Lumen	48 LED	$	53.93
M84441	3" Round Interior Cargo Light White Snap-On Bezel 150 Lumen	15 LED	$	13.43
M84442	5.50 " Round Interior Cargo Light White Snap-On Bezel 320 Lumen	27 LED	$	22.88

M84443	5.50" Round Interior Cargo Light White Snap-On Bezel 450 Lumen		36 LED	$	26.93
M84444	Flush Mount Interior Cargo Light -PIR Sensor 800 Lumen		48 LED	$	86.33
M84445	**6" Undercarraige Light 200 Lumens**		**21 LED**	$	30.98
M85415R	HybridS Round Red STT / Back-Up		15 LED	$	30.98
M85416R	**Low Profile HybridS Round Red STT / Back-Up 2 PL-3 Pigtails**		**24 LED**	$	26.93
M85416R-X	**Low Profile HybridS Round Red STT / Back-Up 2 PL-3 Pigtails Bul Pack**		**24 LED**	$	-
M85615R	HybridS Oval Red STT / Back-Up		16 LED	$	30.98
M85616R	New Slim Hybrid*S Oval* Red STT / Back-Up 2 PL-3 Pigtails		13 LED	$	33.68
M90061R	7" Red STT		17 LED	$	24.91
M90061R-DV	7" Red STT Dual 12/24 Volt		17 LED	$	25.99
M90070R	7" Red Warning		8 LED	$	74.18
M90070Y	7" Amber Warning		8 LED	$	74.18
M90081Y	7" Amber Park / Front & Rear Turn		17 LED	$	24.91
M90081Y-DV	7" Amber Park / Front & Rear Turn Dual 12/24 Volt		17 LED	$	25.99
M90450	7" White Back Up		20 LED	$	47.18
MaxCooler-MED	Maxxima Small Insulated Beverage Cooler 12 Pack			$	10.06
Max-Tag	Maxxima Re-Order Tags 50 Unit Bundle			$	1.35
MaxxCooler-LG	Maxxima Large Insulated Beverage Cooler 24 Pack			$	11.41
Maxxima Banner	Maxxima Vinyl Display Banner			$	20.18
MB-91	Maxxima Sports Bag			$	26.93
MB-95	Maxxima Wheeled Duffel Bag			$	67.43
MBP-12V	Maxxima Battery Pack Uses 8 AA (Batteries Not Included)			$	4.04
MCAP-BLACK	Maxxima Baseball Cap - Black			$	6.68
MCAP-NAVY	Maxxima Baseball Cap - Navy			$	6.68
MCAP-WHITE	Maxxima Baseball Cap - White			$	6.68
MEG-1	Electrical Corrosion Preventive Grease Single Tube 3 Grams			$	1.34
MF-26	Black Aluminum Flashlight White LED - Uses 3AA		5 LED	$	12.08
MF-30A	Black Aluminum Flashlight White LED - Uses 4AAA		6 LED	$	15.46
MFL-100W	Rectangular 2 LED White Fog Light Black Housing		2 LED		#VALUE!
MGF-124	Black Gorilla Heavy Duty LED Flashlight - Uses 3D		24 LED	$	29.03
MHL-07HILO	7" Round Dual Beam Head Lamp 12/24VDC			$	188.93
MHL-4X6HI	**4X6 Head Lamp High Beam 8 LED 12/24VDC**	**NEW LOWER PRICE**		$	148.43
MHL-4X6LL	**4X6 Head Lamp Low Beam 4 LED 12/24VDC**	**NEW LOWER PRICE**		$	148.43
MHL-5X7HILO	5X7 Head Lamp Dual Beam 12/24VDC	NEW LOWER PRICE		$	188.93
MJ-001	Maxxima Reversible Rain Jacket			$	94.43
MLB-BR30120W	LED BR30 950 Lumens 3000K Warm White			$	9.44
MLB-BR30120W-02	LED BR30 950 Lumens 3000K Warm White 2 Pack			$	18.89
MLB-BR40140W	LED BR401100 Lumens 3000K Warm White			$	14.84
MLB-BR40140W-02	LED BR401100 Lumens 3000K Warm White 2 Pack			$	26.99
MLB-191200W	12 Watt A19 Warm White 1,000 Lumens Dimmable			$	10.79
MLB-19850W	8 Watt LED A19 Warm White Bulb 550 Lumens		N/A	$	9.44
MLB-BR40200W	LED BR40 1500 Lumens 3000K Warm White			$	17.54
MLB-191050W-06	10 Watt A19 800 Lumens 2700K Warm White 6 Pack			$	24.29
MLB-191000W	10 Watt A19 800 Lumens 2700K Warm White			$	8.09
MLB-191000W-02	10 Watt A19 800 Lumens 2700K Warm White 2 Pack			$	14.84
MLN-09	LED Night Light On/Off Sensor 110VAC		1 LED	$	2.43
MLN-09-4	LED Night Light On/Off Sensor Barrel Design 110VAC Four Pack			$	8.76
MLN-10	LED Night Light On/Off Sensor 110VAC		1 LED	$	2.43
MLN-10-4	LED Night Light On/Off Sensor Swivel Head Four Pack 110VAC		1 LED	$	8.76
MLN-11-4	LED Louvered Night Light - Auto On/Off Sensor 110VAC Four Pack		2 LED	$	5.06
MLN-15WL-02	2 LED Night Light White Lens On/Off Sensor 110VAC Twin Pack		2 LED	$	9.11
MLN-50	5 LED Night Light - Auto On/Off Sensor		5 LED	$	6.06
MLN-50-02	5 LED Night Light - Auto On/Off Sensor 2 Pack		5 LED	$	9.44
MLN-51	3 LED Frosted Lens Night Light Auto On/Off Sensor		3 LED	$	6.06
MLN-55	LED Motion Sensor Plug In Night Light 110VAC On/Off Sensor			$	9.44
MLN-55-02	LED Motion Sensor Plug In Night Light 110VAC On/Off Sensor 2 Pack			$	18.89
MLN-55W	LED Warm White Motion Sensor Plug In Night Light 110VAC On/Off Sensor			$	9.44
MLN-55W-02	LED Warm White Motion Sensor Night Light 110VAC On/Off Sensor 2 Pack			$	18.89
MLR-D3020CW	16.50' Reel Double Row MLS - Cool White		1200 LED	$	215.93
MLR-D3020WW	16.50' Reel Double Row MLS - Warm White		1200 LED	$	215.93
MLR-S5050CW	16.50' Reel Single Row MLS - Cool White			$	148.43

MLR-S5050WW	16.50' Reel Single Row MLS - Warm White		$	148.43
MLS-01	LED Occupancy Sensor Light - 4 AA Cells	1 LED	$	9.38
MLS-15	6 LED Occupancy Sensor Light	6 LED	$	10.73
MLS-16	6 LED Occupancy Sensor Light Wall Mount	6 LED	$	10.73
MLS-1827-A	White LED Adhesive Strip Light 18"	27 LED	$	20.18
MLS-1827BL	Blue LED Adhesive Strip Light 18"	27 LED	$	20.18
MLS-1827R	Red LED Adhesive Strip Light 18"	27 LED	$	20.18
MLS-1827WW-A	Warm White LED Adhesive Strip Light 18"	27 LED	$	20.18
MLS-1827Y	Amber LED Adhesive Strip Light 18"	27 LED	$	20.18
MLS-2436-A	White LED Adhesive Strip Light 24"	36 LED	$	26.93
MLS-2436-AD	White LED Adhesive Strip Light 24" with Deutsch Connector	36 LED	$	30.98
MLS-2436BL	Blue LED Adhesive Strip Light 24"	36 LED	$	26.93
MLS-2436R	Red LED Adhesive Strip Light 24"	36 LED	$	26.93
MLS-2436WW-A	Warm White LED Adhesive Strip Light 24"	36 LED	$	26.93
MLS-2436Y	Amber LED Adhesive Strip Light 24"	36 LED	$	26.93
MLS-3654-A	White LED Adhesive Strip Light 36"	54 LED	$	33.68
MLS-3654BL	Blue LED Adhesive Strip Light 36"	54 LED	$	33.68
MLS-3654R	Red LED Adhesive Strip Light 36"	54 LED	$	33.68
MLS-3654WW-A	Warm White LED Adhesive Strip Light 36"	54 LED	$	33.68
MLS-3654Y	Amber LED Adhesive Strip Light 36"	54 LED	$	33.68
MLS-4569-A	White LED Adhesive Strip Light 45" with 6" leads	69 LED	$	49.61
MLS-4569-AD	White LED Adhesive Strip Light 45" - 10" leads with Deutsch Connector	69 LED	$	56.36
MLS-78120-AD	White LED Adhesive Strip Light 78" with OEM Connector	120 LED	$	98.48
MLS-96147A-MHE	White LED Adhesive Strip Light 96" with 48" Leads	147 LED	$	107.93
MLS-D18108	White Double Row LED Adhesive Strip Light 18"	108 LED	$	30.71
MLS-D18108WW	**DISCONTINUED**		$	-
MLS-D24144	White Double Row LED Adhesive Strip Light 24"	144 LED	$	37.73
MLS-D24144WW	**DISCONTINUED**		$	-
MLS-D36216	White Double Row LED Adhesive Strip Light 36"	216 LED	$	47.18
MLS-D36216WW	**DISCONTINUED**		$	-
MLS-D45276	White Double Row LED Adhesive Strip Light 45"	276 LED	$	59.33
MLS-D45276WW	Warm White Double Row LED Adhesive Strip Light 45"	276 LED	$	59.33
MPWL-10	Maxxima Portable / Rechargeable 800 Lumen Work Light AC/DC Input	1 LED	$	80.93
MPWL-20	Maxxima Portable / Rechargeable 1700 Lumen Work Light AC/DC Input	1 LED	$	134.93
MPWL-MAGKIT	Magnetic Mounting Kit for MPWL Series	NA	$	10.06
MPWL-10WALLCH	Replacement Wall Charger for MPWL-10		$	12.08
MPWL-20WALLCH	Replacement Wall Charger for MPWL-20		$	12.08
MPWL-30WALLCH	Replacement Wall Charger for MPWL-30		$	14.78
MPWL-CARCH	Car Charger for MPWL 10 & 20		$	5.33
MPWL-Glass10	Replacement Glass Lens for MPWL-10		$	5.39
MPWL-Glass20	Replacement Glass Lens for MPWL-20		$	5.39
MPWL-30	Maxxima Portable / Rechargeable 2350 Lumen Work Light AC Input		$	202.43
MPWL-MAG30	Magnetic Mounting Kit for MPWL 30 Series		$	12.76
MRD-1	Maxxima Retail Counter Display		$	101.25
MRD-2	Maxxima Retail Floor Display		$	243.00
MRH-11	Round 4" Rubber Housing Only - For MWL-12	N/A	$	10.73
MRL-41200W	4" LED Downlight 12W 2700K Warm White		$	13.49
MRL-41200NW	4" LED Downlight 12W 4000K Neutral White		$	13.49
MRL-61900W	6" LED Downlight 19W 2700K Warm White		$	20.24
MRL-61900NW	6" LED Downlight 19W 4000K Neutral White		$	20.24
MRL-41250RW	4" Rotatable Downlight 4000K Neutral White		$	17.54
MRL-61150RW	6" Rotatable Downlight 2700K Warm White		$	20.24
MRL-61150RNW	6" Rotatable Downlight 2700K Neutral White		$	20.24
MRL-41250RW	4" Rotatable Downlight 4000K Warm White		$	17.54
MS-001	Maxxima Golf Shirt White Specify S, M, L, XL		$	17.48
MS-003	Maxxima Golf Shirt Light Blue Specify S, M, L, XL		$	17.48
MTBL-10	Maxxima Tow Bar Light 1,450 Lumen	15 LED	$	188.93
MTBL-UBAR	Steel Mounting Bracket Only for MTBL-10	NA	$	26.80
MWBL-1	Maxxima Work Bar Light Surface Mount 1,450 Lumen	15 LED	$	155.18
MWL-01B	Round LED Work Light 550 Lumens	6 LED	$	62.03
MWL-01Guard	Snap-On Lens Guard for MWL-01 & HP		$	6.68

MWL-01HP	Round LED Work Light - Black 12/24 VDC - 1,200 Lumens	6 LED	$	101.18
MWL-01LS	Round Exterior 6 LED Work Light - 550 Lumen - Liquid Silver Housing	6 LED	$	62.03
MWL-04	Rectangular LED Work Light - Black 12/24 VDC 400 Lumens	6 LED	$	62.03
MWL-05SP	Rectangular LED Work Light - Black 12-36 VDC 1200 Lumens	6 LED	$	87.68
MWL-05SPGR	Rectangular Green LED Work Light - Black 12-36 VDC	6 LED	$	107.93
MWL-07SP	Rectangular LED Work Light - Black 12-36 VDC 1800 Lumens	10 LED	$	134.93
MWL-10SP	Round Mini Grommet Mount Work Light 300 Lumens	2 LED	$	30.98
MWL-10SP-SM	Round Mini Bracket Mount Work Light 300 Lumens	2 LED	$	37.73
MWL-10SP-SMCHR	Round Mini Bracket Mount Work Light 300 Lumens Chrome Finish	2 LED	$	40.43
MWL-11HL	Round 4" Black Rubber LED Work Light - 12/24 VDC 700 Lumens	6 LED	$	67.43
MWL-12	Round 4" LED Work Light - Lamp Only for MWL-11HL 700 Lumens	6 LED	$	60.68
MWL-13	Low Profile Surface Mount Work Light 12/24 VDC 400 Lumens	2 LED	$	51.23
MWL-14	Low Profile Surface Mount Work Light 12/24 VDC 700 Lumens	3 LED	$	60.68
MWL-16	Square LED Work Light 12/24 VDC 1,750 Lumens	10 LED	$	94.43
MWL-18-B	Mini Oval Work Light 1000 Lumen	4 LED	$	52.58
MWL-19	Round 9 LED Black Work Light 500 Lumens 12/24VDC	9 LED	$	30.98
MWL-19Y	Round 9 LED Amber Work Light 12/24VDC	9 LED	$	30.98
MWL-20	Mini Square Work Light 800 Lumen 12/24VDC	4 LED	$	53.93
MWL-20FB	Mini Square Focus Beam LED Work Light - 800 Lumen 12/24VDC	4 LED	$	62.03
MWL-20LS	Mini Square LED Work Light - 800 Lumen 12/24VDC Liquid Silver Housing	4 LED	$	62.03
MWL-21	Rectangular 6 LED Work Light 400 Lumen - Black Aluminum Housing	6 LED	$	53.93
MWL-22	Rectangular 6 LED Work Light 400 Lumen- Aluminum Finish Housing	6 LED	$	53.93
MWL-24SP	Oval 8 LED Work Light 2,575 Lumen 12/24VDC	8 LED	$	182.18
MWL-25SP	Oval 5 LED Work Light 3,600 Lumen 12/24VDC	5 LED	$	256.43
MWL-26	Rectangular 9 LED Black Work Light 500 Lumen 12/24VDC	9 LED	$	30.98
MWL-27	Square 9 LED Black Work Light 500 Lumen 12/24VDC	9 LED	$	30.98
MWL-28	Round 6 LED Black Work Light 1200 Lumen 12/24VDC	6 LED	$	47.18
MWL-29	Rectangular 6 LED Work Light 1200 Lumen 12/24VDC	6 LED	$	47.18
MWL-30	Square 6 LED Work Light 1200 Lumen 12/24VDC	6 LED	$	47.18
MWL-31SP	Compact Square 2 LED Work Light Black Aluminum Housing 1,350 Lumen 12/24VDC	2 LED	$	87.68
MWL-33	3"X6" Rectangular Exterior Scene / Load Light 400 Lumens	9 LED	$	27.61
MWL-36	**Round 9 LED Work Light w/Switch 1,700 Lumens Multi 12-36 VDC Deutsch Connector**	**9 LED**	$	94.43
MWL-37	**Round Magnetic Mount 9 LED Work Light w/ Switch 1,700 Lumens 12-36VDC Deutsch**	**9 LED**	$	107.93
MWL-50SP	Rectangular 6 LED Work Light Black Aluminum Housing 1,550 Lumen 12/24VDC	6 LED	$	74.18
MWL-57SP	Rectangular 8 LED Work Light Black Aluminum Housing 2,150 Lumen 12/24VDC	8 LED	$	101.18
PF-240	3-Pin LED Flasher - 240FPM		$	17.48
PLB-626	DISCONTINUED		$	-
PLB-630-A	White LED Projector Light (1) Black Housing w/ Mounting Bracket	3 LED	$	26.93
PLB-640	DRL - Day Time Running Light Black Housing w/ Mounting Bracket	3 LED	$	40.43
R963BLK	Black Bezel / Trim Ring For LED-963 CL/MBR		$	1.47
R963CH	Chrome Bezel / Trim Ring For LED-963 CL/MBR		$	1.47
R963WH	White Bezel / Trim Ring For LED-963 CL/MBR		$	1.47
SDL-35R	LED Emergency Warning Flasher Red 3.50" Round Uses 3AAA	1 LED	$	9.79
SDL-35Y	LED Emergency Warning Flasher Amber 3.50" Round Uses 3AAA	1 LED	$	9.79
SDL-50-A	LED Emergency Flasher - Amber Uses 4AA	18 LED	$	13.43
SDL-52-A	LED Emergency Flasher - Red Uses 4AA	18 LED	$	13.43
VHL-4X6HI	**Vionic 4X6 Head Lamp High Beam Only**	**1 LED**	$	134.26
VHL-4X6LO	**Vionic 4X6 Head Lamp Low Beam Only**	**1 LED**	$	134.26
VHL-4X6DRL	**Vionic 4X6 Head Lamp Combo Low Beam and DRL**	**5 LED**	$	147.76
VHL-5X7HILO	**Vionic 5x7 Head Lamp Dual HI/ Low Beam**	**TBA**	$	175.43
VHL-07HI/LO	**Vionic 7” Dual Beam Head Lamp HI/ Low Beam**	**TBA**	$	175.43

DISTRIBUTOR PRICE SHEET

RC INDUSTRIES, INC.

Proudly Made in the USA

AMENDED RC PRICE SHEET
May 2015

Storage Systems
and
Accessories

555 CR 15 - ELKHART, IN 46516
PHONE (574)-295-6641 800-382-9511 FAX (574)-295-7537
www.rctoolbox.com * e-mail: sales@rctoolbox.com

TABLE OF CONTENTS

Under Body Boxes…….……..…… ….3

Top Boxes…….……..…… ….6

Side Swinging Boxes…….…..……. ….8

Step Boxes……..……..… ….9

Chest / In-Bed / Trailer Tongue Boxes ……..…..……..……..…..…….. ….10

Storage Pack Boxes……..……. ….11

Basket Boxes…….……..……..…… ….13

Combination Boxes……..…..……. ….13

Drawer Packs……..……..……. ….14

Top-of-Box Trays……..……..……. ….14

Galvanized Shelf Kits/ Slide/Divider……..……. ….15

Accessories……..……..…….. ….16

Services Include

*CAD Design
*B127
*CNC Forming/Punching
*Robotic Welding
*Powder Coating
*Assembly
*Delivery

Please Contact us for more information

P: 574-295-6641
F: 574-295-7537
sales@rctoolbox.com
www.rctoolbox.com

Available Options

Louvers	Lights	Ladder Racks
Cutouts	Special Racks	Rope Hooks
Special Hole Patterns	Bottle Brackets	Tool Holders
Reinforced Floors	Generator Trays	Coat Rods
Offsets	Sign Holder Rack	Special Shelves
Dividers	Walkways	Dura-Tuff coating

UNDER BODY BOXES

Standard Steel Box: Finish is Textured Black

Gloss Black, No Up Charge, But Must Specify

Steel Boxes: $10.00 for White Powder Coat

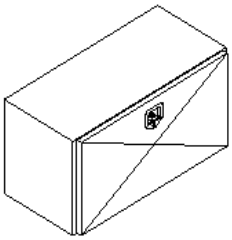

M-Series
Under Body Box

see page 16 for mounting brackets

M SERIES UNDER BODY BOXES Pan formed door, continuous stainless steel hinge, automotive bulb seal, automotive bulb seal, and Anchor Compression Latch. Box may be flush mounted.

		Size (LxHxD)		Wt.	Part Number	Suggested List
Steel Powder Coated Granite Black						
+		24"x14"x12"		60	MM241412.S	$269.05
+		24"x14"x16"		60	MM241416.S	$281.21
+		18"x18"x18"		72	MM181818.S	$283.44
+		24"x18"x18"		72	MM241818.S	$304.76
+		30"x18"x18"		88	MM301818.S	$329.60
+		36"x18"x18"		96	MM361818.S	$345.71
+		48"x18"x18"		122	MM481818.S	$394.43
		60"x18"x18"		140	MM601818.S	$493.99
+	*	72"x18"x18"		158	MM721818.S	$565.58
		72"x18"x18"	single door	158	MM721818.SM	$548.31
+	*	90"x18"x18"		186	MM901818.S	$652.96
+	*	96"x18"x18"		196	MM961818.S	$667.30
		96"x18"x18"	single door	196	MM961818.SM	$650.31
+		24"x18"x24"		90	MM241824.S	$339.86
+		30"x18"x24"		107	MM301824.S	$365.52
+		36"x18"x24"		123	MM361824.S	$385.72
+		48"x18"x24"		155	MM481824.S	$446.78
		60"x18"x24"		188	MM601824.S	$554.94
+	*	72"x18"x24"		224	MM721824.S	$620.37
		24"x24"x24"		109	MM242424.S	$366.36
		30"x24"x24"		130	MM302424.S	$396.49
		36"x24"x24"		140	MM362424.S	$421.16
		48"x24"x24"		185	MM482424.S	$490.48
		60"x24"x24"		222	MM602424.S	$595.51
	*	72"x24"x24"		242	MM722424.S	$681.67
		72"x24"x24"	single door	242	MM722424.SM	$646.69
	*	96"x24"x24"		280	MM962424.S	$826.10
		96"x24"x24"	single door	280	MM962424.SM	$783.35
.100 Diamond Bright Aluminum						
		24"x14"x12"		28	MQ241412.Q	$372.17
		24"x14"x16"		28	MQ241416.Q	$399.23
		18"x18"x18"		34	MQ181818.Q	$401.83
		24"x18"x18"		34	MQ241818.Q	$440.72
		30"x18"x18"		39	MQ301818.Q	$479.65
		36"x18"x18"		45	MQ361818.Q	$510.22
		48"x18"x18"		58	MQ481818.Q	$590.33
		60"x18"x18"		69	MQ601818.Q	$703.10
	*	72"x18"x18"		80	MQ721818.Q	$827.39
	*	90"x18"x18"		96	MQ901818.Q	$956.52
	*	96"x18"x18"		104	MQ961818.Q	$987.09
		24"x24"x24"		44	MQ242424.Q	$534.93
		30"x24"x24"		52	MQ302424.Q	$580.46
		36"x24"x24"		59	MQ362424.Q	$620.90
		48"x24"x24"		70	MQ482424.Q	$723.87
		60"x24"x24"		84	MQ602424.Q	$859.78
	*	72"x24"x24"		96	MQ722424.Q	$998.19
*		96"x24"x24"		124	MQ962424.Q	$1,207.68

**** Denotes double door boxes,***
+ Denotes crossbreak.

RC INDUSTRIES INC
Proudly Made in the USA

M SERIES UNDER BODY BOXES

Pan formed door, continuous stainless steel hinge, automotive bulb seal, automotive bulb seal, and Anchor Compression Latch. Box may be flush mounted.

Aluminum Boxes: See Accessories for Price

.125 Diamond Bright Aluminum

	Size (LxHxD)	Wt.	Part Number	Suggested List
	24"x14"x16"	34	MU241416.U	$422.88
	24"x18"x18"	38	MU241818.U	$469.76
	30"x18"x18"	46	MU301818.U	$514.21
	36"x18"x18"	58	MU361818.U	$550.32
	48"x18"x18"	68	MU481818.U	$641.48
	60"x18"x18"	82	MU601818.U	$765.31
*	72"x18"x18"	96	MU721818.U	$901.03
*	90"x18"x18"	96	MU901818.U	$1,046.75
*	96"x18"x18"	130	MU961818.U	$1,082.85
	24"x24"x24"	53	MU242424.U	$575.76
	30"x24"x24"	62	MU302424.U	$628.36
	36"x24"x24"	70	MU362424.U	$675.88
	48"x24"x24"	84	MU482424.U	$792.99
	60"x24"x24"	100	MU602424.U	$943.05
*	72"x24"x24"	114	MU722424.U	$1,096.45
*	96"x24"x24"	155	MU962424.U	$1,334.23

.125 Smooth Aluminum

	Size (LxHxD)	Wt.	Part Number	Suggested List
	24"x18"x18"	38	MX241818.X	$443.36
	30"x18"x18"	43	MX301818.X	$483.31
	36"x18"x18"	51	MX361818.X	$514.90
	48"x18"x18"	68	MX481818.X	$597.05
	60"x18"x18"	77	MX601818.X	$711.87
*	72"x18"x18"	90	MX721818.X	$838.26
*	96"x18"x18"	130	MX961818.X	$1,002.05
	24"x24"x24"	50	MX242424.X	$539.74
	30"x24"x24"	59	MX302424.X	$586.58
	36"x24"x24"	66	MX362424.X	$628.33
	48"x24"x24"	79	MX482424.X	$733.91
	60"x24"x24"	94	MX602424.X	$872.43
*	72"x24"x24"	110	MX722424.X	$1,013.61
*	96"x24"x24"	155	MX962424.X	$1,228.33

14 Gauge Bright Stainless Steel

		Size (LxHxD)	Wt.	Part Number	Suggested List
+		24"x18"x18"	72	MK241818.K	
+		30"x18"x18"	84	MK301818.K	
+		36"x18"x18"	96	MK361818.K	
+		48"x18"x18"	120	MK481818.K	
		60"x18"x18"	145	MK601818.K	
+	*	72"x18"x18"	170	MK721818.K	
+	*	96"x18"x18"	170	MK961818.K	
		24"x24"x24"	109	MK242424.K	
		30"x24"x24"	130	MK302424.K	
		36"x24"x24"	140	MK362424.K	
		48"x24"x24"	185	MK482424.K	
		60"x24"x24"	222	MK602424.K	
	*	72"x24"x24"	266	MK722424.K	
	*	96"x24"x24"	304	MK962424.K	

Call for Pricing
441 Stainless Steel-- .K
304 Stainless Steel-- .9

All Stainless Steel must be cleaned regularly to maintain finish.

**** Denotes double door boxes + Denotes crossbreak.***

M SERIES UNDER BODY BOXES

Pan formed door, continuous stainless steel hinge, automotive bulb seal, automotive bulb seal, and Anchor Compression Latch. Box may be flush mounted.

Steel boxes: Gloss black available at no additional cost; add $10 per box for gloss or texture white.

Aluminum Boxes: See Accessories for Price

Steel Powder Coated Granite Black With 14 Gauge Bright Stainless Steel Door

		Size (LxHxD)	Wt.	Part Number	Suggested List
+		24"x18"x18"	84	MM241818.K	$336.52
+		30"x18"x18"	95	MM301818.K	$368.63
+		36"x18"x18"	100	MM361818.K	$392.10
+		48"x18"x18"	125	MM481818.K	$456.76
		60"x18"x18"	146	MM601818.K	$544.16
+	*	72"x18"x18"	167	MM721818.K	$659.78
+	*	96"x18"x18"	258	MM961818.K	$792.30

RC INDUSTRIES INC
Proudly Made in the USA

M SERIES UNDER BODY BOXES

Pan formed door, continuous stainless steel hinge, automotive bulb seal, automotive bulb seal, and Anchor Compression Latch. Box may be flush mounted.

	Size (LxHxD)	Wt.	Part Number	Suggested List
	24"x24"x24"	109	MM242424.K	$435.09
	30"x24"x24"	130	MM302424.K	$485.90
	36"x24"x24"	140	MM362424.K	$531.34
	48"x24"x24"	185	MM482424.K	$643.39
	60"x24"x24"	222	MM602424.K	$791.68
*	72"x24"x24"	266	MM722424.K	$902.10
*	96"x24"x24"	290	MM962424.K	$1,130.95
.125 Smooth Aluminum Box With 14 Gauge Bright Stainless Steel Door				
+	24"x18"x18"	42	MX241818.K	$446.73
+	30"x18"x18"	49	MX301818.K	$488.11
+	36"x18"x18"	56	MX361818.K	$521.14
+	48"x18"x18"	70	MX481818.K	$606.17
	60"x18"x18"	88	MX601818.K	$712.27
+ *	72"x18"x18"	90	MX721818.K	$857.07
+ *	96"x18"x18"	156	MX961818.K	$1,026.20
.125 Smooth Aluminum Box With .125 Diamond Bright Aluminum Door				
	24"x18"x18"	42	MX241818.U	$451.01
	30"x18"x18"	49	MX301818.U	$492.35
	36"x18"x18"	56	MX361818.U	$525.34
	48"x18"x18"	70	MX481818.U	$610.28
	60"x18"x18"	88	MX601818.U	$727.88
*	72"x18"x18"	90	MX721818.U	$856.42
*	96"x18"x18"	126	MX961818.U	$1,025.78

**** Denotes double door boxes, + Denotes crossbreak.***

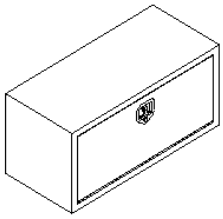

Z-Series
Flush Mounted Door

Z SERIES UNDER BODY BOXES

Flush door, stainless steel hinge, flat neoprene door seal and Anchor Compression Latch.

Gloss black available at no additional cost; add $10 per box for gloss or texture white.

	Size (LxHxD)	Wt.	Part Number	Suggested List
Steel Powder Coated Granite Black				
	24"x14"x12"	57	ZM241412	$265.93
	24"x14"x16"	64	ZM241416	$277.76
	18"x18"x18"	72	ZM181818	$279.56
	24"x18"x18"	80	ZM241818	$302.51
	30"x18"x18"	92	ZM301818	$327.91
	36"x18"x18"	106	ZM361818	$345.48
	42"x18"x18"	122	ZM421818	$378.54
	48"x18"x18"	134	ZM481818	$393.36
	60"x18"x18"	164	ZM601818	$477.75
*	72"x18"x18"	196	ZM721818	$562.31
*	96"x18"x18"	260	ZM961818	$663.08
	24"x18"x24"	90	ZM241824	$337.93
	30"x18"x24"	107	ZM301824	$364.23
	36"x18"x24"	123	ZM361824	$385.97
	48"x18"x24"	155	ZM481824	$446.33
	60"x18"x24"	188	ZM601824	$539.48
*	72"x18"x24"	224	ZM721824	$617.10
	24"x24"x24"	109	ZM242424	$362.74
	30"x24"x24"	130	ZM302424	$391.96
	36"x24"x24"	147	ZM362424	$416.63
	48"x24"x24"	188	ZM482424	$482.86
	60"x24"x24"	240	ZM602424	$586.08
*	72"x24"x24"	266	ZM722424	$669.97
*	96"x24"x24"	354	ZM962424	$808.22

**** Denotes double door boxes, single door optional.***

TOP BOXES

Standard Steel Box: Finish is Textured Black

Gloss Black, No Up Charge, But Must Specify

Steel Boxes: $20.00 for White Powder Coat

Powder Coating Aluminum boxes see pg 16

see page 16 for mounting brackets

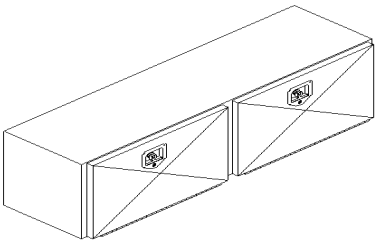

M-Series
Top of Truck Box

M SERIES TOP BOXES Pan formed door, continuous stainless steel hinge, automotive bulb seal, automotive bulb seal, and Anchor Compression Latch. Box may be flush mounted.

		Size (LxHxD)	Wt.	Part Number	Suggested List
Steel Powder Coated Granite Black					
+		48"x16"x13"	94	MM481613.M	$358.39
		60"x16"x13"	114	MM601613.M	$449.77
+	*	72"x16"x13"	126	MM721613.M	$488.69
+	*	84"x16"x13"	160	MM841613.M	$567.74
+	*	90"x16"x13"	156	MM901613.M	$563.46
+	*	96"x16"x13"	184	MM961613.M	$576.05
.100 Diamond Bright Aluminum					
	*	72"x16"x13"	69	MQ721613.Q	$731.81
	*	84"x16"x13"	79	MQ841613.Q	$816.38
	*	90"x16"x13"	84	MQ901613.Q	$844.91
	*	96"x16"x13"	88	MQ961613.Q	$872.32
.125 Diamond Bright Aluminum					
	*	72"x16"x13"	78	MU721613.U	$791.96
	*	84"x16"x13"	87	MU841613.U	$885.77
	*	90"x16"x13"	92	MU901613.U	$918.93
	*	96"x16"x13"	98	MU961613.U	$950.97
14 Gauge Bright Stainless Steel					
+	*	72"x16"x13"	130	MK721613.K	Call for Pricing
+	*	84"x16"x13"	147	MK841613.K	441 Stainless Steel-- .K
+	*	90"x16"x13"	158	MK901613.K	304 Stainless Steel-- .9
+	*	96"x16"x13"	168	MK961613.K	All Stainless Steel must be cleaned regularly to maintain finish
XL Top Boxes - Steel Powder Coated Granite Black					
+	*	72"x18"x16"	152	MM721816.S	$555.84
+	*	84"x18"x16"	169	MM841816.S	$620.67
+	*	90"x18"x16"	178	MM901816.S	$641.18
+	*	96"x18"x16"	188	MM961816.S	$654.84
XL Top Boxes - .125 Diamond Bright Aluminum					
	*	72"x18"x16"	102	MU721816.U	$871.76
	*	84"x18"x16"	113	MU841816.U	$973.73
	*	90"x18"x16"	119	MU901816.U	$1,012.59
	*	96"x18"x16"	125	MU961816.U	$1,047.07
XXL Top Boxes - Steel Powder Coated Granite Black					
	*	72"x24"x16"	205	MM722416.S	$619.83
	*	84"x24"x16"	226	MM842416.S	$695.94
	*	90"x24"x16"	236	MM902416.S	$720.92
	*	96"x24"x16"	247	MM962416.S	$739.05
XXL Top Boxes - .125 Diamond Bright Aluminum					
	*	72"x24"x16"	113	MU722416.U	$964.72
	*	84"x24"x16"	126	MU842416.U	$1,079.59
	*	90"x24"x16"	133	MU902416.U	$1,123.35
	*	96"x24"x16"	138	MU962416.U	$1,162.71

**** Denotes double door boxes, single door optional.***
+ Denotes crossbreak.

TOP BOXES

COMBINATION M SERIES TOP BOXES

Pan formed door, continuous stainless steel hinge, automotive bulb seal, and Anchor Compression Latch. Box may be flush mounted.

Mix and match box and door materials.

Gloss black available at no additional cost; add $20 per box for gloss or texture white.

Steel Powder Coated Granite Black With Bright Stainless Steel Doors

		Size (LxHxD)	Wt.	Part Number	Suggested List
+	*	72"x16"x13"	128	MM721613.K	$578.11
+	*	84"x16"x13"	147	MM841613.K	$671.46
+	*	90"x16"x13"	156	MM901613.K	$674.03
+	*	96"x16"x13"	166	MM961613.K	$694.61

+ Denotes crossbreak.

Z SERIES

Standard Steel Box: Finish is Textured Black

Gloss Black, No Up Charge, But Must Specify

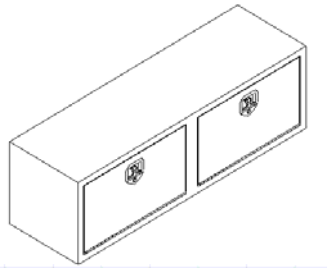

Steel Boxes: $20.00 for White Powder Coat

Aluminum Boxes: See Accessories for Price

Z-Series
Top of Truck Box

Z SERIES TOP BOXES

Flush door, continuous stainless steel hinge, flat neoprene door seal and stainless T-handle

Gloss black available at no additional cost; add $20 per box for gloss or texture white.

Steel Powder Coated Granite Black

	Size (LxHxD)	Wt.	Part Number	Suggested List
	48"x16"x13"	94	ZM481613	$360.55
	60"x16"x13"	114	ZM601613	$439.60
*	72"x16"x13"	140	ZM721613	$488.87
*	84"x16"x13"	160	ZM841613	$565.39
*	90"x16"x13"	166	ZM901613	$561.77
*	96"x16"x13"	172	ZM961613	$576.09

**** Denotes double door boxes, single door optional.***

RC INDUSTRIES INC
Proudly Made in the USA

SIDE SWINGING DOOR BOXES

Standard Steel Box: Finish is Textured Black

Gloss Black, No Up Charge, But Must Specify

Steel Boxes: + $10.00 for White Powder Coat

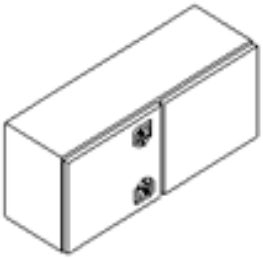

F-Series
Barn Doors--side hinging

see page 16 for mounting brackets

F SERIES DOUBLE SIDE SWINGING DOOR UNDERBODY BOX
2 side swinging doors, no center post, 2 gas props, continuous stainless steel hinge, automotive bulb seal and Anchor Compression Latch.

Size (LxHxD)	Wt.	Part Number	Suggested List
Steel Powder Coated Granite Black			
Gloss black available at no additional cost; add $10 per box for gloss or texture white.			
36"x18"x18"	110	FM361818.M	$436.94
48"x18"x18"	136	FM481818.M	$475.72
36"x24"x24"	142	FM362424.M	$507.27
48"x24"x24"	172	FM482424.M	$560.66
60"x24"x24"	212	FM602424.M	$624.33
72"x24"x24"	254	FM722424.M	$664.64
.125 Diamond Bright Aluminum			
For black or white powder coat (texture or gloss), see pg 16 for pricing			
36"x18"x18"	58	FU361818.U	$647.46
48"x18"x18"	68	FU481818.U	$722.79
36"x24"x24"	85	FU362424.U	$777.68
48"x24"x24"	92	FU482424.U	$878.96
60"x24"x24"	110	FU602424.U	$987.39
72"x24"x24"	124	FU722424.U	$1,075.42
.125 Smooth Aluminum			
For black or white powder coat (texture or gloss), see pg 16 for pricing			
36"x18"x18"	54	FX361818.X	$621.45
48"x18"x18"	64	FX481818.X	$687.87
36"x24"x24"	76	FX362424.X	$739.37
48"x24"x24"	88	FX482424.X	$829.22
60"x24"x24"	100	FX602424.X	$926.32
72"x24"x24"	112	FX722424.X	$1,003.02
.125 Smooth Aluminum With 14 Gauge Bright Stainless Steel Doors			
For black or white powder coat (texture or gloss), see pg 16 for pricing			
36"x18"x18"	108	FX361818.K	$675.79
48"x18"x18"	134	FX481818.K	$761.72
36"x24"x24"	138	FX362424.K	$809.20
48"x24"x24"	162	FX482424.K	$922.78
60"x24"x24"	202	FX602424.K	$1,044.05
72"x24"x24"	244	FX722424.K	$1,143.92

Standard box is road side unless specified differently at time of order.

STEP BOX

Standard Steel Box: Finish is Textured Black

Gloss Black, No Up Charge, But Must Specify

Steel Boxes: + $10.00 for White Powder Coat

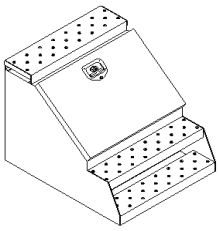

B-Series
Step Box

see page 16 for mounting brackets

B SERIES STEP BOXES

Large slip-resistant steps, rubber door stops, internal mounting angles, stainless steel hardware, stainless steel T handle, automotive bulb seal.

B series not eligible for combined quantity breaks.

Size (LxHxD)	Wt.	Part Number	Suggested List
.125 Smooth Aluminum Box With .125 Diamond Bright Aluminum Door			
12"x24"x28"	40	BX122428.UL	$535.48
18"x24"x28"	47	BX182428.UL	$584.07
24"x24"x28"	54	BX242428.UL	$627.68
30"x24"x28"	61	BX302428.UL	$680.50
36"x24"x28"	68	BX362428.UL	$733.43
.125 Smooth Aluminum Box With Bright Stainless Steel Door			
12"x24"x28"	41	BX122428.KL	$548.00
18"x24"x28"	48	BX182428.KL	$604.27
24"x24"x28"	56	BX242428.KL	$654.40
30"x24"x28"	63	BX302428.KL	$713.65
36"x24"x28"	70	BX362428.KL	$773.08

Standard Steel Box: Finish is Textured Black

Gloss Black, No Up Charge, But Must Specify

Steel Boxes: + $10.00 for White Powder Coat

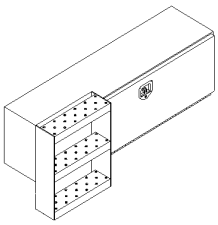

D-Series
Step Box

see page 16 for mounting brackets

D SERIES STEP BOXES

Combines our M series box with integrated steps for easy access to your bed.

Gloss black available at no additional cost; add $10 per box for gloss or texture white.

D series not eligible for combined quantity breaks.

Size (LxHxD)	Wt.	Part Number	Suggested List
Steel Powder Coated Granite Black			
+ 36"x18"x18"	110	DM361818.S	$508.85
+ 48"x18"x18"	131	DM481818.S	$551.60
+ 60"x18"x18"	152	DM601818.S	$618.10
36"x24"x24"	153	DM362424.S	$591.11
48"x24"x24"	183	DM482424.S	$645.03
60"x24"x24"	213	DM602424.S	$720.81
Steel Powder Coated Granite Black With Bright Stainless Steel Door			
+ 36"x18"x18"	108	DM361818.K	$542.03
+ 48"x18"x18"	128	DM481818.K	$600.47
+ 60"x18"x18"	148	DM601818.K	$681.85
36"x24"x24"	153	DM362424.K	$663.68
48"x24"x24"	184	DM482424.K	$765.84
60"x24"x24"	216	DM602424.K	$885.32

+ Denotes crossbreak on doors

CHEST BOX

Standard Steel Box: Finish is Textured Black

Gloss Black, No Up Charge, But Must Specify

Steel Boxes: + $10.00 for White P

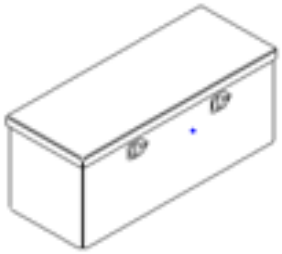

G-Series
Chest Box

see page 16 for mounting brackets

G SERIES CHEST STYLE BOXES

Open-Back-Flat design, continuous stainless steel hinge, gas props included. In-Bed design available to allow for storage of long items under the box.

Size (LxHxD)	Wt.	Part Number	Suggested List
Steel Powder Coated Granite Black			
Gloss black available at no additional cost; add $10 per box for gloss or texture white.			
45"x18"x20"	110	GM451820.S	$506.86
60"x18"x20"	137	GM601820.S	$576.15
36"x18"x24"	101	GM361824.S	$459.73
45"x18"x24"	121	GM451824.S	$532.43
60"x18"x24"	154	GM601824.S	$606.13
.125 Diamond Bright Aluminum			
For black or white powder coat (texture or gloss), see page 16 for pricing			
45"x18"x20"	51	GU451820.U	$800.79
54"x18"x20"	60	GU541820.U	$878.26
60"x18"x20"	65	GU601820.U	$920.16
36"x18"x24"	48	GU361824.U	$746.18
45"x18"x24"	57	GU451824.U	$852.15
60"x18"x24"	73	GU601824.U	$981.58
G Series In-Bed Boxes (These boxes include risers and trays)			
Steel In-Bed Box		.RC	$65.87
Aluminum In-Bed Box		.RC	$74.99

TONGUE BOX

Standard Steel Box: Finish is Textured Black

Gloss Black, No Up Charge, But Must Specify

Steel Boxes: + $10.00 for White Powder Coat

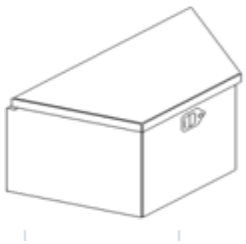

T-Series
Tongue Box

T SERIES TRAILER-MOUNTED TONGUE BOXES

Open-Back-Flat design, continuous stainless steel hinge, paddle latch, gas props included.

Size (LxHxD)	Wt.	Part Number	Suggested List
Steel Powder Coated Granite Black			
Gloss black available at no additional cost; add $10 per box for gloss or texture white.			
30"x14"x14"	50	TM301414.M	$274.55
36"x20"x16"	68	TM362016.M	$309.77
.072 Diamond Bright Aluminum			
For black or white powder coat (texture or gloss), see page 16 for pricing			
30"x14"x14"	27	TV301414.V	$310.80
36"x20"x16"	37	TV362016.V	$365.57

STORAGE PACKS

Standard Steel Box: Finish is Textured Black

Gloss Black, No Up Charge, But Must Specify

Steel Boxes: + $40.00 for White Powder Coat

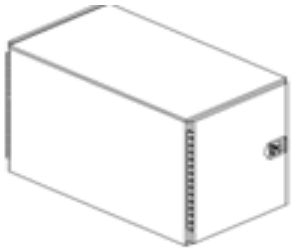

J-Series
Storage Pack

Storage packs (J, L, R series) are not eligible for combined quantity breaks.
Please submit an RFQ for powder coated aluminum boxes.

J SERIES STORAGE PACKS Pan formed doors, continuous stainless steel hinges, automotive bulb seal, Anchor compression Latch, and gas props.

Size (LxHxD)	Wt.	Part Number	Suggested List
Steel Powder Coated Granite Black			
96"x24"x24"	286	JM962424.S	$1,040.00
96"x36"x24"	362	JM963624.S	$1,199.55
96"x48"x24"	438	JM964824.S	$1,416.33
Welded-in shelf		.SH (single)	
.125 Diamond Bright Aluminum			
96"x24"x24"	180	JU962424.U	$1,600.53
96"x36"x24"	224	JU963624.U	$1,884.45
96"x48"x24"	269	JU964824.U	$2,224.12
Welded-in shelf		.UH (single)	
Optional Integrated Mounting Angle			
Steel		.SN	$199.83
Aluminum		.UN	$295.33

STORAGE PACKS

Standard Steel Box: Finish is Textured Black

Gloss Black, No Up Charge, But Must Specify

Steel Boxes: + $40.00 for White Powder Coat

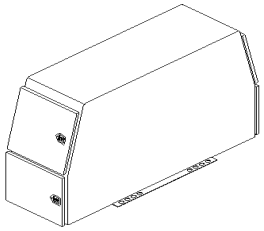

L-Series
Storage Pack

Storage packs (J, L, R series) are not eligible for combined quantity breaks.
Please submit an RFQ for powder coated aluminum boxes.
We highly recommend mounting your storage packs with our spring mounting kit.
Using an alternative mounting method may damage your product and will void your warranty.

L SERIES FLAT BOTTOM BOXES Pan formed doors, continuous stainless steel hinges, automotive bulb seal, Anchor Latch, 1 adjustable shelf, 2 rope hooks, gas props, and integrated mounting angle.

Size (LxHxD)	Part Number	Wt.	Suggested List
Steel Powder Coated Granite Black With 12 Gauge Floor			
82"x46"x24"	LM824624.MAS	520	$2,456.40
Steel w/ Granite Black Box and 14 ga Stainless Steel Door			
82"x46"x24"	LM824624.KAS	520	$2,892.32
.125 Diamond Bright Aluminum, .190 Floor (Includes Spring Mounting Kit)			
82"x46"x24"	LU824624.UAS	338	$3,651.92
L-Series Options			
White Powder Coat: Texture / Gloss			$26.60
Additional Adjustable Shelf (Steel)	SHF2152K.4	40	$98.69
Additional Adjustable Shelf (Alum.)	SHF2152K.X	24	$147.43
Slide-Out Shelf	RR2442.ST		$373.38
Addistional Shelf 96" box	SHF2164K.4		
Spring Mounting Kit	RC051	14	$125.00

Standard Steel Box: Finish is Textured Black

Gloss Black, No Up Charge, But Must Specify

Steel Boxes: + $40.00 for White Powder Coat

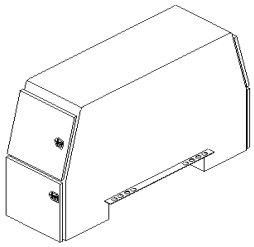

R-Series
Storage Pack

R SERIES SADDLE BOXES Pan formed doors, continuous stainless steel hinges, automotive bulb seal, Anchor Latch, 1 adjustable shelf, 2 rope hooks, gas props, and integrated mounting angle.

Size (LxHxD)	Wt.	Part Number	Suggested List
Steel Powder Coated Granite Black With 12 Gauge Floor			
82"x55"x24"	572	RM825524.MAS	$2,570.82
94"x58"x24"	640	RM945824.MAS	$2,708.07
Steel w/ Granite Black Box and 14 ga Stainless Steel Door			
82"x55"x24"	520	RM825524.KAS	$3,018.24
.125 Diamond Bright Aluminum, .190 Floor (Includes Spring Mounting Kit)			
82"x55"x24"	338	RU825524.UAS	$3,794.65
94"x58"x24"	365	RU945824.UAS	$4,059.56
White Powder Coat: Texture / Gloss			$26.60
Additional Adjustable Shelf (Steel)		SHF2152K.4	$103.50
Additional Adjustable Shelf (Alum.)		SHF2152K.X	$147.43
Slide Out Shelf		RR2442.ST	$373.38
Spring Mounting Kit		RC051	$125.00

L Pack Add a M Series 24 x 14 x 16 box

BASKET BOXES

Standard Steel Box: Finish is Textured Black

Gloss Black, No Up Charge, But Must Specify

Steel Boxes: + $10.00 for White Powder Coat

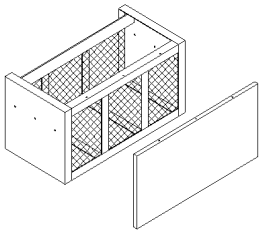

RC-Series
Basket Box w / Cover

BASKET BOXES WITH OPTIONAL STAINLESS STEEL OR POWDER COATED COVER

Store your dunnage in this versatile box. Includes chain rail and optional face cover.

Size (LxHxD)	Wt.	Part Number	Suggested List
Steel Powder Coated Granite Black			
36"x18"x18"	114	RC536	$504.63
48"x18"x18"	131	RC548	$569.98
60"x18"x18"	149	RC560	$644.25
Cover- Steel Powder Coated Granite Black			
36"x18"	17	RC736	$93.15
48"x18"	22	RC748	$101.83
60"x18"	27	RC760	$112.22
Cover- Bright Stainless Steel			
36"x18"	17	RC636	$181.80
48"x18"	22	RC648	$214.13
60"x18"	27	RC660	$246.52

Custom sizes also available.

COMBINATION BOXES

Standard Steel Box: Finish is Textured Black

Gloss Black, No Up Charge, But Must Specify

Steel Boxes: + $10.00 for White Powder Coat

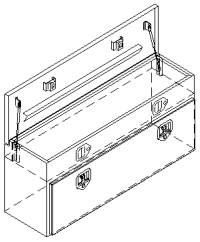

Q-Series
Combination Box

COMBINING A CHEST BOX WITH A DROP DOWN DOOR

Convenience of a chest with easy access bottom storage.

To be keyed the same, must go with Stainless Steel T Handle and Paddle Latch

Size (LxHxD)	Wt.	Part Number	Suggested List
Steel Powder Coated Granite Black			
Steel Powder Coated Granite Black			
48"x20"x15"	166	QM482015.SL	$927.03
60"x20"x15"	186	QM602015.SL	$1,070.15
72"x20"x15"	205	QM722015.SL	$1,250.53
90"x20"x15"	236	QM902015.SL	$1,343.70
96"x20"x15"	247	QM962015.SL	$1,382.98

DRAWER PACKS

Standard Steel Box: Finish is Textured Black

Gloss Black, No Up Charge, But Must Specify

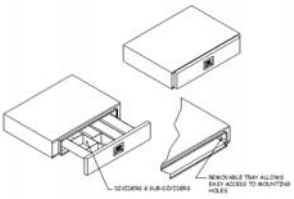

Texture White, Gloss White or Stainless Steel Fronts

RC3-Series
Drawer Packs

Drawer packs are not eligible for combined quantity breaks.

DRAWER PACKS WITH SLIDING TRAY

Powder coated granite black. Mounts to existing boxes or to additional drawer packs for easy access to small items. Smoothly operates on heavy duty slides. Includes lockable Stainless Steel T-handle.

Size (LxHxD)	Approx WT. (lbs)	Part Number	Suggested List
24"x6.75"x18"	44	RC32418	$408.73
30"x6.75"x18"	55	RC33018	$422.62
36"x6.75"x18"	60	RC33618	$438.20
48"x6.75"x18"	74	RC34818	$462.15
24"x6.75"x24"	54	RC32424	$423.65
30"x6.75"x24"	64	RC33024	$439.10
36"x6.75"x24"	73	RC33624	$456.32
48"x6.75"x24"	90	RC34824	$487.07

Optional Galvanized Dividers and Sub-Dividers sold separately

Size	Part Number	Suggested List	Unit Price
18" Divider	RC315	$5.37	
24" Divider	RC321	$5.97	
Sub-Divider	DIV303	$0.97	

TOP-OF-BOX TRAYS

Standard Steel Box: Finish is Textured Black

Gloss Black, No Up Charge, But Must Specify

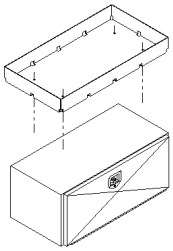

PTR-Series
Top of Tray Boxes

Top-of-Box-Trays are not eligible for combined quantity breaks.

TOP-OF-BOX TRAYS

Powder coated granite black. Open storage tray. (Does not include the toolbox.)

Size (LxHxD)	Approx WT. (lbs)	Part Number	Suggested List
30"x18"	36	RC3018.PTR	$79.88
36"x18"	42	RC3618.PTR	$88.48
48"x18"	53	RC4818.PTR	$109.78
60"x18"	64	RC6018.PTR	$127.80
30"x24"	45	RC3024.PTR	$93.98
36"x24"	52	RC3624.PTR	$102.88
48"x24"	66	RC4824.PTR	$126.33
60"x24"	80	RC6024.PTR	$148.13

SHELF KITS

GALVANIZED TOOL BOX DIVIDER TRAY KITS

Call For Pricing

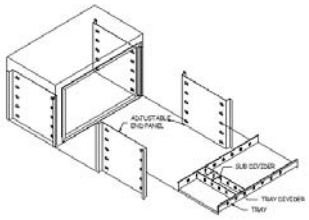

TOOL BOX SLIDE OUT DRAWER KITS

Call For Pricing

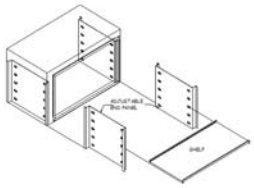

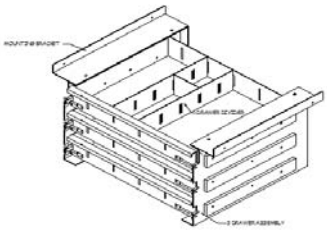

	Box Size (LxHxD)	Approx WT. (lbs)		Part Number	Description	Sugg. List
GALVANIZED SHELF KITS FOR STANDARD ABOVE BODY (16"Hx13"D) TOOL BOXES						
Shelf Kit In Cardboard Box, Includes: Shelf, End Brackets, And Mounting Angle Kit						
	48"x16"x13"	22		RC4813.1KT	Shelf for 48"x16"x13" (43-1/4" x 10"D)	$67.62
	60"x16"x13"	24		RC6013.1KT	Shelf for 60"x16"x13" (55-1/4" x 10"D)	$71.30
*	72"x16"x13"	20	**	RC3613.1KT	1/2 Shelf for 72"x16"x13" (31-1/4"x10"D)	$64.00
*	90"x16"x13"	22	**	RC4513.1KT	1/2 Shelf for 90"x16"x13" (40-1/4"x10"D)	$66.72
*	96"x16"x13"	22	**	RC4813.1KT	1/2 Shelf for 96"x16"x13" (43-1/4"x10"D)	$67.62

	Box Size (LxHxD)	Approx WT. (lbs)		Part Number	Description	Sugg. List
GALVANIZED SHELF KITS FOR STANDARD UNDER BODY (18"Hx18"D) TOOL BOXES						
Shelf Kit In Cardboard Box, Includes: Shelf And End Brackets						
	24"x18"x18"	17		RC2418.1KT	Shelf for 24"x18"x18" (19-1/4"x15"D)	$50.12
	30"x18"x18"	19		RC3018.1KT	Shelf for 30"x18"x18" (25-1/4"x15"D5)	$52.67
	36"x18"x18"	21		RC3618.1KT	Shelf for 36"x18"x18" (31-1/4"x15"D)	$55.23
	48"x18"x18"	25		RC4818.1KT	Shelf for 48"x18"x18" (43-1/4"x15"D)	$60.35
	60"x18"x18"	28		RC6018.1KT	Shelf for 60"x18"x18" (55-1/4"x15"D)	$65.50
*	72"x18"x18"	21	**	RC3618.1KT	1/2 Shelf for 72"x18"x18" (31-1/4"x15"D)	$55.23
		2		RC15ANG.KT	Mounting Angle Kit	$20.77

	Box Size (LxHxD)	Approx WT. (lbs)		Part Number	Description	Sugg. List
GALVANIZED SHELF KITS FOR STANDARD UNDER BODY (24"Hx24"D) TOOL BOXES						
Shelf Kit In Cardboard Box, Includes: Shelf And End Brackets						
	24"x24"x24"	29		RC2424.1KT	Shelf for 24"x24"x24" (19-1/4"x21"D)	$65.13
	30"x24"x24"	31		RC3024.1KT	Shelf for 30"x24"x24" (25-1/4"x21"D)	$68.58
	36"x24"x24"	34		RC3624.1KT	Shelf for 36"x24"x24" (31-1/4"x21"D)	$72.03
	48"x24"x24"	39		RC4824.1KT	Shelf for 48"x24"x24" (43-1/4"x21"D)	$78.93
	60"x24"x24"	44		RC6024.1KT	Shelf for 60"x24"x24" (55-1/4"x21"D)	$85.92
*	72"x24"x24"	34	**	RC3624.1KT	1/2 Shelf for 72"x24"x24" (31-1/4"x21"D)	$72.03
		2		RC21ANG.KT	Mounting Angle Kit	$22.50

Denotes Standard Double Door Box.

****For Full Length Shelving Use (2) Shelf Kits And (1) Mounting Angle Kit. For 1/2 Shelf Use (1) Shelf Pricing Does Not Include Installation.***

ACCESSORIES

ACCESSORIES Customize your product to fit your needs. Description	Part Number	Suggested List
Toolbox Mounting Bracket Underbody (“L” Type)	RC001 (single bracket)	$24.45
Toolbox Mounting Bracket Underbody (Arm Type)	RC008 (single bracket)	$30.00
Toolbox Center Mounting Bracket Underbody (“L”)	RC006 (single bracket)	$40.93
Toolbox Mounting Kit (Above Body - Black)	RC003B (pair of brackets)	$26.03
Toolbox Mounting Kit (Above Body - White)	RC003W (pair of brackets)	$26.03
Storage Pack Spring Mounting Kit	RC051 (four U bolts)	$125.00
Toolbox Mounting Bracket (Arm Type Right Hand)	RC290 (single bracket)	$31.62
Toolbox Mounting Bracket (Arm Type Left Hand)	RC291 (single bracket)	$31.62
Single Door 3 Point Latch System	.T3	$30.00
Single Door 2 Handle 4 Point Latch System	.T4	$35.00
Double Door 3 Point Latch System	.T3	$50.00
Stainless Steel T-Handle Kit	13-8400-SSR	$28.00
Cylinder Lock (for SS T-Handle) with Key	CH (Key#)	$11.00
Replacement Key (for SS T-Handle)	CH (Key#)-Key	$4.00
F Series Stainless Steel T-Handle Kit	24-8400-SSR.FKT	$30.00
Drawer Box Stainless Steel T-Handle Kit	24-20-812-35	$30.00
Anchor Latch T-Handle Kit	8-325-281	$30.00
Anchor Latch T-Handle Kit (F, V, C Series Box)	8-325-281-F	$38.00
Replacement Anchor Lock Cylinder	Anchor Lock Cylinder #21	$11.00
Anchor Latch Double Bitted Key	Key 21 Double Bitted	$4.00
Stainless Steel T-Handle Instead of Anchor Latch	L	$10.00
Rotary Slam Latch instead of Anchor Latch	R	$15.00
Padlockable Anchor Latch instead of T-Handle	275021-90.k	$25.00
Replacement Paddle Latch (G and T Series Box)	3W-461-545-SSL	$25.00
Stricker for Paddle Latch	4618-50-39	$11.00
Adding Black Powder Coat to Aluminum Price Sheet Box	Box Under 48" Wide	$45.00
Adding Black Powder Coat to Aluminum Price Sheet Box	Box 48" - 96" Wide	$82.00
Adding Black Powder Coat to Aluminum Price Sheet Box	Storage Pack	$127.00
Dura-Tuff sprayed in grey coating	.I	$8/sq.ft.
Weather Bulb Seal (M, V, P, K Series Boxes)	CBS-102/ft	$5 / ft
Neoprene (Flat) Weather Seal (Z, G, T Series Boxes)	LP-103 / ft	$1 / ft

Parts list order form available upon request.

K-Series

Underbody side swinging doors with center post

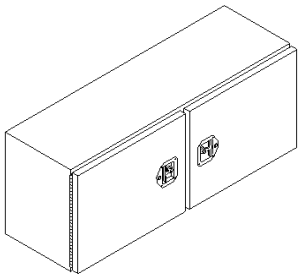

P-Series

Top Hinging Box

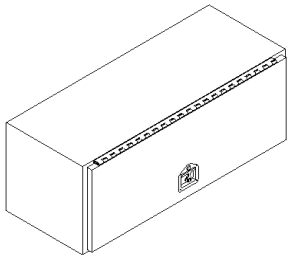

V-Series

Side Swinging Door

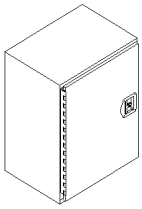

Bumpers

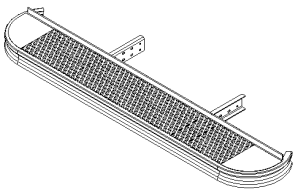

Tank Box in V or C Series

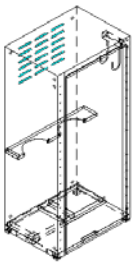

RC INDUSTRIES CAN FILL YOUR CUSTOM BUMPER AND METAL FABRICATION NEEDS.

RC INDUSTRIES, INC.

Proudly Made in the USA

TERMS:	Net 30 for approved accounts. Cash in advance or C.O.D. for all other accounts. RC Industries reserves the right to withhold shipments to past due accounts.
TRANSPORTATION:	F.O.B. Elkhart, Indiana
POLICY:	Prices, sizes, and specifications are subject to change without notice.
FREIGHT CLAIMS:	Claims for damage or loss in transit must be filed by the consignee against the carrier. Claims for shortages must be filed in writing within 3 days after receipt of shipment.
RETURNED GOODS:	Returned goods will not be accepted without an RGA number issued from RC Industries. A 15% restocking fee may be charged on all returned goods. All adjustments on returns are based on the cost at the time of purchase and the goods being in a saleable condition. All goods must be returned freight prepaid.
LEAD TIMES:	Please call for lead times.
OTHER NOTES:	For special size boxes, call for quotation. Style of boxes may be combined for quantity price breaks (excluding "B", "J", "L", "R" Series and Drawer Packs) on purchase orders with full release. All dimensions are +/- .25"

2016 DEALER INSEASON PRICING

Pricing Effective 8/1/2016

TRUCK SNOWPLOWS

UTV SNOWPLOWS

SKID-STEER PLOWS

PUSHER PLOWS

TAILGATE SPREADERS

HOPPER SPREADERS

LIQUID EQUIPMENT

SIDEWALK EQUIPMENT

TAILGATE MOUNTS & ACCESSORIES

PARTS

SnowEx Products
531 Ajax Dr.
Madison Heights, MI 48071
snowexproducts.com

TRUCK PLOW INSEASON PRICING 2016

COMPLETE TRUCK PLOW PACKAGE

SERIES	MODEL	LIST
LIGHT DUTY	6800 LT	$4,951.00
	7200 LT	$5,023.00
REGULAR DUTY	7600 RD	$5,362.00
	8000 RD	$5,557.00
HEAVY DUTY	7600 HD	$6,175.00
	8000 HD	$6,329.00
	8600 HD	$6,490.00
	9000 HD	$6,652.00
SPEEDWING™	8600 SPEEDWING™	$8,037.00
POWER PLOW™	8100 POWER PLOW™	$8,828.00
	8611 POWER PLOW™	$9,338.00
HEAVY DUTY V-PLOW	8'6" HDV™ MILD STEEL ***NEW***	$7,839.00
	8'6" HDV™ STAINLESS STEEL ***NEW***	$8,719.00
	9'6" HDV™ MILD STEEL ***NEW***	$8,238.00
	9'6" HDV™ STAINLESS STEEL ***NEW***	$9,132.00

Complete Plow Pricing Includes: Blade, Big Box, Vehicle Undercarriage, Headlamps, Isolation Module, Vehicle Wiring Harness & Control. Pricing does not include harness adapter, when required.

Pricing is subject to change.

Pricing effective as of August 1, 2016

SnowEx Products
531 Ajax Dr.
Madison Heights, MI 48071
snowexproducts.com

TRUCK PLOW BLADE & BIG BOX INSEASON PRICING 2016

TRUCK BLADE ASSEMBLIES:

PART #	SERIES	LIST
77700	6800 LT BLADE	$925.00
77705	7200 LT BLADE	$997.00
77710	7600 RD BLADE	$967.00
77715	8000 RD BLADE	$1,162.00
77720-1	7600 HD BLADE ***NEW***	$1,546.00
77725-1	8000 HD BLADE ***NEW***	$1,700.00
77730-1	8600 HD BLADE ***NEW***	$1,861.00
77735-1	9000 HD BLADE ***NEW***	$2,023.00
77740	8600 SPEEDWING BLADE	$3,062.00
77750	8100 POWER PLOW BLADE	$3,660.00
77755	8611 POWER PLOW BLADE	$4,170.00
77770	8'6" HDV MILD STEEL ***NEW***	$2,470.00
77775	8'6" HDV STAINLESS STEEL ***NEW***	$3,350.00
77780	9'6" HDV MILD STEEL ***NEW***	$2,869.00
77785	9'6" HDV STAINLESS STEEL ****NEW***	$3,763.00

TRUCK BIG BOX

PART #	SERIES	LIST
77800	LT BIG BOX	$2,964.00
77810	RD BIG BOX	$3,115.00
77820	HD BIG BOX	$3,349.00
77840	SPEEDWING BIG BOX	$3,695.00
77850	POWER PLOW BIG BOX	$3,869.00
77870	HDV BIG BOX ***NEW***	$4,070.00

Pricing is subject to change.

Pricing effective as of August 1, 2016

SnowEx Products
531 Ajax Dr.
Madison Heights, MI 48071
snowexproducts.com

TRUCK PLOW UNDERCARRIAGES INSEASON PRICING 2016

RD/HD/SPEEDWING/POWER PLOW TRUCK UNDERCARRIAGES

	PART #	MODEL	LIST
GM	31599-1	GM 1500 (2007-15)	$533.00
	33559	GM C4500/5500 4X4 (2005-09)	$533.00
	63900	GM K10-35/SUB/BLZ (1973-91)	$533.00
	64110	GM C4500/5500 4X2 (2002-08)	$533.00
	67865	GM K2500/3500/SUB (1988-2000)	$533.00
	67960-1	GM K1500 (1999-02)	$533.00
	67981-2	GM 2500HD/3500/C3500/SUB/YUK (1999-09)	$533.00
	69981	GM 2500HD/3500 (2011-15)	$533.00
	30865	GM K2500/3500/SUB (1988-2000) ***BLIZZARD PH2***	$533.00

FORD	31270	FORD F250SD-550SD (2017) ***NEW***	$533.00
	1369	FORD F150/BRONCO (1992-97)	$533.00
	1379	FORD F250-F350SD (1992-97)	$533.00
	31269-1	FORD SD (2008-16)	$533.00
	3249	FORD F250SD-550SD (2004 LATE)	$533.00
	33259	FORD F250SD-550SD (2005-07)	$533.00
	64500	FORD F150 (2004-08)	$533.00
	67810	FORD F150 (1997-04) F250 (1997-99)	$533.00
	67982	FORD F250SD-550SD 1999-04 EARLY	$533.00
	63710-1	FORD F250/F350 (1987-91)	$533.00
	68600	FORD F150 (2009-10/2013-14)	$533.00
	38600	F150 (2015-16)	$533.00
	30269-1	FORD SD (2008-16) ***BLIZZARD PH2***	$533.00
	30279	FORD F150/BRONCO (1992-97) ***BLIZZARD PH2***	$533.00
	30982	FORD F250SD-550SD 1999-04 EARLY ***BLIZZARD PH2***	$533.00
	31810	FORD F150 (1997-04) F250 (1997-99) ***BLIZZARD PH2***	$533.00

DODGE/ RAM	3919	DODGE DAKOTA (2000-04), DURANGO (2000-03)	$533.00
	33884	RAM 2500/3500 (2010-16), (DIESEL 2010-12)	$533.00
	33886-1	RAM DIESEL 2500/3500 (2013-15)	$533.00
	33929	DODGE DAKOTA (2005-11)	$533.00
	33940-1	RAM 4500/5500 (2008-16) STERLING 45/55 (2008-09)	$533.00
	33949	RAM 1500 (2009-15)	$533.00
	30999	RAM 1500 (2006-08)	$533.00
	63760	RAM 1500 (2002-05)	$533.00
	67980	RAM 1500-3500 (1994-02)	$533.00
	63883-2	RAM 1500 MEGA (2006-09) 2500/3500 (2003-09)	$533.00
	33887-1	DODGE RAM UC 2500/3500 2010 -	$533.00
	33980	RAM 1500-3500 (1994-02) ***BLIZZARD PH2***	$533.00
	33760	RAM 1500 (2002-05) ***BLIZZARD PH2***	$533.00
	33999	RAM 1500 (2006-08) ***BLIZZARD PH2***	$533.00

Pricing is subject to change.

Pricing effective as of August 1, 2016

SnowEx Products
531 Ajax Dr.
Madison Heights, MI 48071
snowexproducts.com

RD/HD/SPEEDWING/POWER PLOW TRUCK UNDERCARRIAGES

	PART #	MODEL	LIST
NISSAN	35066-1	NISSAN TITAN (2004-16)	$533.00
TOYOTA	31139	TOYOTA TUNDRA (2007-15)	$533.00
	35139	TOYOTA TUNDRA (2007-15) ***BLIZZARD PH2 ONLY***	$533.00
JEEP	33220	JEEP WRANGLER (2007-15)	$533.00
MITSUB	33109	MITSUBISHI FG (2005-11)	$533.00
	33209	MITSUBISHI FG (2012-15)	$533.00
INTER	35109	IHC TERRASTAR 4X2 (2011-15)	$533.00
	35110	IHC TERRASTAR 4X4 (2013-15)	$533.00
ISZUZU	33212-1	ISUZU NPR (2008-15)	$533.00
STERLING	33940-1	STERLING BULLET 45	$533.00

SnowEx Products
531 Ajax Dr.
Madison Heights, MI 48071
snowexproducts.com

LT MODEL TRUCK UNDERCARRIAGES

	PART #	MODEL	LIST
GM	1503	GM BLAZER/JIMMY (1995-04)	$315.00
	1523	GM K1500/TAH/YUK (1999-07)	$315.00
	1533-1	GM TRAILBLZ/ENVOY (2002-09)	$315.00
	31543-2	GM CANYON / COLO (2004-12)	$315.00
	31553-1	GM K1500 (2007-16)	$315.00
	31563	COLORADO / CANYON (2015 - 2016)	$315.00
FORD	1203	FORD RANGER/EXPL (1996-09)	$315.00
	1213-1	FORD EXPLORER (2002-03)	$315.00
	1223	FORD F150/EXPED (1997-03)	$315.00
	1233	FORD F150 (2004-08)	$315.00
	31243	FORD SPORT TRAC (2007-10)	$315.00
	31253	FORD F150 (2009-10, 2013-14)	$315.00
	31263	FORD RANGER/EXPL (2010-11)	$315.00
	31273	FORD F150 (2015-2016)	$315.00
DODGE	33903	DODGE DAKOTA (2005-11), DURANGO (2004-10)	$315.00
	33913	RAM 1500 (2006-08)	$315.00
	33923	RAM 1500 (2009-15)	$315.00
TOYOTA	2303	TOYOTA TUNDRA (2000-06)	$315.00
	2313	TOYOTA TACOMA (1995-1/2-04)	$315.00
	32323-1	TOYOTA TACOMA (2005-16)	$315.00
	32333	TOYOTA TUNDRA (2007-16)	$315.00
NISSAN	31303-1	NISSAN TITAN (2004-16)	$315.00
	31313	NISSAN FRONTIER (2005-14)	$315.00
JEEP	3713-2	JEEP LIBERTY (2002-12)	$315.00
	3723	JEEP WRANGLER (1997-06)	$315.00
	42021	JEEP GRAND CHEROKEE (2005-10)	$315.00
	42113-1	JEEP WRANGLER (2007-16)	$315.00

Pricing is subject to change.

Pricing effective as of August 1, 2016

SnowEx Products
531 Ajax Dr.
Madison Heights, MI 48071
snowexproducts.com

ELECTRICAL COMPONENT INSEASON PRICING 2016

TRUCK HARNESS KITS:

PART #	DESCRIPTION	LIST
29048	HB-3 / HB-4 (GMT 800, CLASSIC) QUAD	$226.00
29049	H-13 DUAL	$226.00
29050	HB-5, HB-1 DUAL OR QUAD	$226.00
29051	2B, 2D, HB-2 DUAL	$226.00
29052	HB3/HB4 4 PIN	$226.00
29053	2B, 2D, - 1A / 2A - GM 4500/5500 DUAL OR QUAD	$226.00
29054	7-Pin Connector	$226.00
29400-5	HB-3 / H-11 (GM & TOYOTA) QUAD	$226.00
69804	HIR2/HB3 (Projector Style Headlight)	$226.00
69805	PROJECTOR STYLE - HID	$226.00
69818	HB3/H11/HIR2 (Projector Style Headlight)	$226.00
52101	CHEVY/GMC 2500/3500 HB-3/HB-11/HID	$226.00
72101	CHEVY/GMC 1500 HID/LED ***NEW***	$226.00
29052	HB3/HB4 4-PIN	$226.00
29454	RELAY & H13 TO HB3 & H11	$226.00
69889	PLUG-IN HARNESS KIT	$226.00
69892	7 WIRE RAM HD	$226.00
73973	2017 FORD HALOGEN ***NEW***	$226.00
73977	2017 FORD LED ***NEW***	$226.00

VEHICLE ISOLATION MODULE:

PART #	DESCRIPTION	LIST
29070-1	MODULE 3-PORT DRL/non-DRL	$134.00
29760-2	MODULE 3-PORT - SOFT START DRL/non-DRL	$134.00

CONTROLS:

PART #	DESCRIPTION	LIST
84400	POWER GRIP™ HANDHELD - Straight Blades (includes SW)	$387.00
84450	JOYSTICK - Straight Blades (includes SW)	$387.00
84455	POWER GRIP™ HANDHELD - POWER PLOW™ & HDV™	$406.00
84460	JOYSTICK - POWER PLOW™ & HDV™	$406.00

TRUCK HARNESS ADAPTER KITS:

PART #	DESCRIPTION	LIST
29234	ADAPTER KIT - HARN TO LIGHTS	$43.00
28860-1	ADAPTER KIT - HB5 TO 6 PIN	$43.00
29056-1	ADAPTER KIT - HB5/HB1 QUAD LIGHTS	$43.00
28027-2	ADAPTER KIT - IN-LINE RELAY	$43.00
48236	ADAPTER KIT - INTERNATIONAL 4300/TERRASTAR	$43.00
29033	ADAPTER KIT - 2E HARNESS TO H13	$43.00
29420-1	ADAPTER KIT - H13 TO HB3 & H11	$43.00
69826-1	ADAPTER KIT - RELAY	$43.00
B62225-1	ADAPTER KIT - H13 to LF/UF	$43.00
72100	HB-3 to H9 ADAPTER HARNESS ***NEW***	$43.00
29047	ADAPTER KIT - 3 Port to 22415/18	$22.00
26641-1	ADAPTER KIT - HARN TO LIGHTS - HB-5 TO 1A/2A	$43.00
48499	ADAPTER KIT - CONTROL TEE	$22.00
69859	ADAPTER LED KIT	$43.00
69928	ADAPTER KIT - 8 PIN	$43.00
76048	ADAPTER KIT - 6 PIN	$43.00
78490	GM SUPPLEMENTAL HARNESS KIT	$22.00

SnowEx Products
531 Ajax Dr.
Madison Heights, MI 48071
snowexproducts.com

UTV PLOW INSEASON PRICING 2016 **NEW**

COMPLETE UTV PLOW

SIZE	MODEL	LIST
6000 UTV	6' UTV V-PLOW	$4,256.00

UTV BLADE ASSEMBLY

PART #	MODEL	LIST
77765	BLADE ASSY - 6'0 SX V UTV	$1,200.00

UTV BIG BOX

PART #	MODEL	LIST
77865	UTV V- PLOW BIG BOX	$2,325.00

UTV UNDERCARRIAGES

PART #	MODEL	LIST
35133	MOUNT KIT PP KUBOTA RTV	$325.00
35134	MOUNT KIT PP GATOR	$325.00
35136	MOUNT KIT PP MULE 4010	$325.00
35135	MOUNT KIT PP POLARIS RANGER	$325.00
35140	MOUNT KIT PP MULE 3010	$325.00
35138	MOUNT KIT PP VIKING	$325.00
35132	MOUNT KIT PP RHINO	$325.00

CONTROLS:

PART #	DESCRIPTION	LIST
84455	POWER GRIP™ HANDHELD - POWER PLOW™ & HDV™	$406.00
84460	JOYSTICK - POWER PLOW™ & HDV™	$406.00

ACCESSORIES

PART #	DESCRIPTION	LIST
52657	UTV WING EXT KIT	$573.00
52656	UTV SHOE ASSEMBLY KIT	$149.00
52653	UTV SNX DEFLECTOR	$211.00

Pricing is subject to change.

Pricing effective as of August 1, 2016

SnowEx Products
531 Ajax Dr.
Madison Heights, MI 48071
snowexproducts.com

SKID-STEER COMPONENT INSEASON PRICING 2016

COMPLETE SKID-STEER PLOWS

SIZE	MODEL	LIST
HEAVY DUTY	7600 HD	$3,235.00
	8000 HD	$3,389.00
	8600 HD	$3,550.00
	9000 HD	$3,712.00
SPEEDWING™	8600 SPEEDWING	$4,816.00

SKID-STEER BLADE ASSEMBLIES

PART #	MODEL	LIST
77720-1	7600 HD BLADE ***NEW***	$1,546.00
77725-1	8000 HD BLADE ***NEW***	$1,700.00
77730-1	8600 HD BLADE ***NEW***	$1,861.00
77735-1	9000 HD BLADE ***NEW***	$2,023.00
77740	8600 SPEEDWING BLADE	$3,062.00

SKID-STEER BIG BOX*

PART #	MODEL	LIST
77825	HD SKID-STEER BIG BOX	$1,689.00
77845	SPEEDWING SKID-STEER BIG BOX	$1,754.00

*All skid steer big boxes come with universal skid steer mounting plat

Pricing is subject to change.

Pricing effective as of August 1, 2016

SnowEx Products
531 Ajax Dr.
Madison Heights, MI 48071
snowexproducts.com

POWER PUSHER™ INSEASON PRICING 2016

PART #	SERIES	LIST
77880	8' SKID-STEER	$2,796.00
77885	10' SKID-STEER	$3,003.00

POWER PUSHER ACCESSORIES

PART #	DESCRIPTION	LIST
72069	LEVEL GAUGE	$86.00
72041	BINDER KIT - LOADER	$342.00
72042	BINDER KIT - BACKHOE	$285.00
72048	WEAR SHOE - SUPER DUTY - LOADER (ea)	$646.00
72049	WEAR SHOE - SUPER DUTY - SKID-STEER/BACKHOE (ea)	$409.00
72051	SELF LEVELING SHOE - STANDARD LOADER (ea)	$646.00
72052	SELF LEVELING SHOE - STANDARD SKID-STEER/BACKHOE (ea)	$433.00
72053	SELF LEVELING SHOE - SUPER DUTY LOADER (ea)	$833.00
72054	SELF LEVELING SHOE - SUPER DUTY SKID-STEER/BACKHOE (ea)	$568.00

POWER PUSHER SERVICE PARTS

PART #	DESCRIPTION	LIST
72046	WEAR SHOE - STANDARD LOADER (ea)	$432.52
72047	WEAR SHOE - STANDARD SKID-STEER/BACKHOE (ea)	$290.39
72056	10' RUBBER CUTTING EDGE BACKHOE/LOADER	$642.13
72057	12' RUBBER CUTTING EDGE BACKHOE/LOADER	$777.10
72058	14' RUBBER CUTTING EDGE BACKHOE/LOADER	$894.69
72059	16' RUBBER CUTTING EDGE BACKHOE/LOADER	$1,023.52
72061	8' RUBBER CUTTING EDGE - SKID-STEER	$300.62
72062	10' RUBBER CUTTING EDGE SKID-STEER	$381.39

Pricing is subject to change.

Pricing effective as of August 1, 2016

SnowEx Products
531 Ajax Dr.
Madison Heights, MI 48071
snowexproducts.com

SNOWEX®/BLIZZARD® ACCESSORIES INSEASON PRICING 2016

PART #	PLOW SHOES	LIST
84506	SHOE ASSEMBLY KIT (SNX LT, RD & HD ONLY)	$131.00
40501	SHOE ASSEMBLY KIT (BD LT, HD, SW, PP & SNX SW & PP)	$131.00
43088	SHOE ASSEMBLY KIT (HDV) ***NEW***	$203.00
52656	SHOE ASSEMBLY KIT (UTV) ***NEW***	$149.00
PART #	**CURB GUARDS**	**LIST**
43885	CURB GUARD KIT (SNX HD & HDV) ***NEW***	$238.00
44404	CURB GUARD SINGL CAST ***NEW***	$102.00
PART #	**BLADE WING EXTENSIONS**	**LIST**
84575	BOLT ON WING EXTENSIONS (SNX HD ONLY)	$716.00
43510-1	WING EXT KIT (HDV) ***NEW***	$764.00
52657	ACCESSORY WING KIT (UTV) ***NEW***	$573.00
PART #	**SHOCK ABSORBERS**	**LIST**
84563	SHOCK ABSORBERS (SNX HD "-1" BLADE ONLY) ***NEW***	$116.00
PART #	**SNOWEX RUBBER SNOW DEFLECTORS**	**LIST**
84524	DEFLECTOR KIT SNOWEX 6800LT & 7200LT	$211.00
84514	DEFLECTOR KIT SNOWEX 7600RD & 7600HD	$226.00
84517	DEFLECTOR KIT SNOWEX 8000RD, 8000HD, 8600HD & 9000HD	$264.00
84518	DEFLECTOR KIT SNOWEX SPEEDWING™	$316.00
84519	DEFLECTOR KIT SNOWEX 8100 POWER PLOW™	$370.00
84520	DEFLECTOR KIT SNOWEX 8611 POWER PLOW™	$390.00
85108	10" RUBBER DEFL. SNOWEX HDV ***NEW***	$283.00
85109	18" RUBBER DEFL. (EXT) SNOWEX HDV ***NEW***	$411.00
52653	DEFLECTOR KIT SNOWEX UTV ***NEW***	$211.00
PART #	**TOUCH UP PAINT**	**LIST**
84480	SnowEx GRAY ENAMEL 12OZ (order in multiples of 12)	$19.00
84479	SnowEx YELLOW ENAMEL 12OZ (order in multiples of 12)	$19.00
84481	SnowEx BLACK ENAMEL 12OZ (order in multiples of 12)	$16.00
84478	SnowEx RED ENAMEL 12OZ (order in multiples of 12)	$19.00
84482	SnowEx PRIMER ENAMEL 12OZ (order in multiples of 12)	$19.00
84485	SnowEx GRAY ENAMEL QUART (order in multiples of 6)	$61.00
84484	SnowEx PRIMER ENAMEL QUART (order in multiples of 6)	$61.00
84483	SnowEx BLACK ENAMEL QUART (order in multiples of 6)	$61.00

Pricing is subject to change.

Pricing effective as of August 1, 2016

SnowEx Products
531 Ajax Dr.
Madison Heights, MI 48071
snowexproducts.com

SNOWEX®/BLIZZARD® ACCESSORIES INSEASON PRICING 2016

PART #	HYDRAULIC FLUID	LIST
84497	ONE QUART SX HYD FLUID (order in multiples of 12)	$12.00
84491	ONE GALLON SX HYDRAULIC FLUID (order multiples of 6)	$31.00
84492	ONE DRUM-55 GAL. SX HYD FLUID	$1,133.00
PART #	**MISC.**	**LIST**
84525	BLADE GUIDE ASSY POLY 24" SX Standard on All SnowEx Blades w/SNX Logo	$33.00
84477	BLADE GUIDE ASSY POLY 36" SX Accessory Longer Blade Guides w/SNX Logo	$47.00
56099	DIELECTRIC GREASE TUBE	$3.69
84785	EMERGENCY PARTS KIT SNOWEX LT	$200.00
84780	EMERGENCY PARTS KIT SNOWEX RD, HD, SW, PP	$200.00
85121	Tall Receiver DS ***NEW***	$160.00
85122	Tall Receiver PS ***NEW***	$160.00
43082-1	BLADE STOP KIT (HDV) ***NEW***	$167.00
62490	FLEXIBLE CONTROL MOUNT	$105.00

Pricing is subject to change.

Pricing effective as of August 1, 2016

SnowEx Products
531 Ajax Dr.
Madison Heights, MI 48071
snowexproducts.com

BLIZZARD SNOWPLOW ACCESSORIES INSEASON PRICING 2016

PART #	SNOW DEFLECTORS	LIST
B61243	RUBBER SNOW DEFLECTOR W/ HARDWARE (MODEL 760LT)	$231.00
40506	RUBBER SNOW DEFLECTOR W/HARDWARE (MODEL 7600LT/8000LT)	$217.00
B61242	RUBBER SNOW DEFLECTOR W/ HARDWARE (MODEL 760)	$231.00
B61260	RUBBER SNOW DEFLECTOR W/ HARDWARE (MODEL 800)	$255.00
B61545	RUBBER SNOW DEFLECTOR W/ HARDWARE (MODEL 860)	$290.00
40700	RUBBER SNOW DEFLECTOR W/HARDWARE (MODEL 7600HD,8000HD, 8600HD,9000HD)	$235.00
78219	RUBBER SNOW DEFLECTOR W/ HARDWARE (MODEL 860SW/8600SW)	$290.00
42384	DEFLECTOR KIT (8600 SPEEDWING) 2012-	$281.00
B61241	RUBBER SNOW DEFLECTOR W/HARDWARE (MODEL 810/810-1/810SS/8100PP)	$314.00
B52087	RUBBER SNOW DEFLECTOR W/HARDWARE (MODEL 8611/8611LP/86110LP/8611SS)	$360.00
PART #	**AIRFOILS**	**LIST**
B81041	SNOWPLOW AIRFOIL W/ HARDWARE (MODEL 760LT)	$186.00
B52093	SNOWPLOW AIRFOIL W/HARDWARE (MODEL 760/800/860/810/HD/8600SW)	$186.00
B52092	SNOWPLOW AIRFOIL W/ HARDWARE (MODEL 8611)	$217.00
PART #	**POLY CUTTING EDGES**	**LIST**
B61536	WING & MOLDBOARD CUTTING EDGE SET W HARDWARE (810PP/810SS) 01-_ (810-1PP/8100PP) '08-_	$1,082.00
B61539	WING & MOLDBOARD CUTTING EDGE SET W HARDWARE (8611PP/ 8611SS) 02-_	$1,576.00
B61538	WING CUTTING EDGE SET W HARDWARE (810PP/810SS) 01-_ (810-1PP) 08-_ (8100PP) '09-_	$581.00
B61541	WING CUTTING EDGE SET W HARDWARE (8611PP/ 8611SS) 01-_	$999.00
B61544	MOLDBOARD CUTTING EDGE W/ HARDWARE (760LT/760HD) 00-_	$570.00
B61543	MOLDBOARD CUTTING EDGE W/ HARDWARE (800HD) 00-_	$582.00
B61542	MOLDBOARD CUTTING EDGE W/ HARDWARE (860HD) 04-_	$601.00
B61537	MOLDBOARD CUTTING EDGE W/ HARDWARE (810PP/ 810SS) 01-_ (810-1PP/8100PP) '08-_	$648.00
B61540	MOLDBOARD CUTTING EDGE W/ HARDWARE (8611PP/8611SS) 02-_	$565.00
B61288	3/8" HEAVY DUTY WING CUTTING EDGE W/ HARDWARE (810PP/810SS) 99-_ (810-1PP) '08-_	$224.00
B51114	3/4" HEAVY DUTY WING CUTTING EDGE W/ HARDWARE (8611PP)	$424.00
PART #	**BACK-DRAG EDGE KITS**	**LIST**
84463	BACK-DRAG EDGE KIT (7600LT & 7600HD)	$110.00
84464	BACK-DRAG EDGE KIT (8000LT & 8000HD)	$115.00
84466	BACK-DRAG EDGE KIT (8600HD)	$120.00
84465	BACK-DRAG EDGE KIT (9000HD)	$125.00
84461	BACK-DRAG EDGE KIT (8600 SPEEDWING) 2012-	$130.00
48765	Back-Drag Edge Bolt Kit (only required w/1/2" cutting edges)	$34.61
PART #	**SHOE ASSEMBLY KIT**	**LIST**
40501	SHOE ASSEMBLY KIT (7600LT,8000LT,7600HD,8000HD,8600HD,9000HD)	$131.00
PART #	**CURB GUARDS**	**LIST**
40699	CURB GUARD KIT - EACH (7600HD,8000HD,8600HD,9000HD)	$102.00

Pricing is subject to change.

Pricing effective as of August 1, 2016

SnowEx Products
531 Ajax Dr.
Madison Heights, MI 48071
snowexproducts.com

BLIZZARD SNOWPLOW ACCESSORIES INSEASON PRICING 2016

PART #	TOUCH-UP PAINT	LIST
B61219	BLIZZARD TOUCH-UP PAINT (GLOSS WHITE - 12 OZ. SPRAY CAN) (order in multiples of 12)	$20.00
B63073	BLIZZARD TOUCH-UP PAINT (GLOSS BLACK - 12 OZ. SPRAY CAN) (order in multiples of 12)	$25.00
43494	BLIZZARD GRAY PRIMER QUART (order in multiples of 6)	$62.00
43495	BLIZZARD WHITE ENAMEL QUART (order in multiples of 6)	$62.00
43496	BLIZZARD BLACK ENAMEL QUART (order in multiples of 6)	$62.00
43498	BLIZZARD GRAY PRIMER 12 OZ (order in multiples of 12)	$16.00
PART #	**EMERGENCY PARTS KITS**	**LIST**
50880	EMERGENCY KIT- PH2 -FLEET FLEX	$200.00
50885	EMERGENCY KIT - PH - HD/PP/SW	$200.00
50890	EMERGENCY KIT - 680/720LT	$200.00
PART #	**MISC.**	**LIST**
56099	DIELECTRIC GREASE TUBE	$3.69
B61049	BLADE GUIDES (set of 2 w/fasteners)	$21.00
62849	BALLAST RETAINER KIT	$152.00
B63078	12" ADJUSTABLE PEDESTAL CONTROL MOUNT (ALL CONTROL TYPES) PH-1	$170.00
B61261	WINDOW MOUNT CONTROL BRACKET (STRAIGHT BLADE JOYSTICK) PH-1	$99.00

Pricing is subject to change.

Pricing effective as of August 1, 2016

SnowEx Products
531 Ajax Dr.
Madison Heights, MI 48071
snowexproducts.com

SNOWEX®/BLIZZARD® PLOW CUTTING EDGES INSEASON PRICING 2016

PART #	STEEL CUTTING EDGES W/HARDWARE	LIST
B61458	1/4" CUTTING EDGE (BD 680LT & SNX 6800LT)	$121.00
B61531	1/4" CUTTING EDGE (BD 720LT & SNX 7200LT)	$140.44
84445	5/16" CUTTING EDGE (SNX 7600 RD)	$126.25
84467	5/16" CUTTING EDGE (SNX 8000 RD)	$135.00
42417	3/8" CUTTING EDGE (BD 7600 LT & SNX 7600RD)	$169.57
40552	3/8" CUTTING EDGE (BD 8000LT & SNX 8000RD)	$203.90
40695	1/2" CUTTING EDGE (BD/SNX 7600HD & 7600RD)	$193.50
40696	1/2" CUTTING EDGE (BD/SNX 8000HD & 8000RD)	$198.70
40697	1/2" CUTTING EDGE (BD/SNX 8600HD)	$213.26
40698	1/2" CUTTING EDGE (BD/SNX 9000HD)	$223.66
B52067	1/2" CUTTING EDGE (BD/SNX 8100PP)	$197.64
B52095	1/2" CUTTING EDGE (BD 86110LP PP & SNX 8611PP)	$204.35
B61648	1/2" CUTTING EDGE (BD/SNX 8600SW)	$236.15
84462	1/2" CUTTING EDGE (BD/SNX 8600SW)	$193.00
B61625	5/8" MOLDBOARD CUTTING EDGE (BD 8611PP)	$265.00
84850	8.5' x 3/8" Cutting Edge (SNX HDV) ***NEW***	$380.00
84851	8.5' x 1/2" Cutting Edge (SNX HDV) ***NEW***	$444.00
84852	9.5' x 1/2" Cutting Edge (SNX HDV) ***NEW***	$503.00
84825	CUTTING EDGE KIT (SNX UTV) ***NEW***	$121.00
PART #	**STEEL WING EDGES W/HARDWARE**	**LIST**
42383	1/2" WING CUTTING EDGE (BD/SNX 8600SW)	$254.87
B51104	1/4" WING CUTTING EDGE (BD/SNX 8100PP)	$245.51
B61687	1/4" WING CUTTING EDGE (BD 8611PP & 86110LP PP & SNX 8611PP)	$357.86
B61288	3/8" WING CUTTING EDGE (BD/SNX 8100PP)	$224.00
B51114	3/4" WING CUTTING EDGE (BD 8611PP & 86110LP PP & SNX 8611PP)	$424.00
B51103	3/8" WING CUTTING EDGE (BD 8611PP & 86110LP PP & SNX 8611PP)	$372.43
PART #	**V-PLOW CENTER CUTTING EDGES W/HARDWARE**	**LIST**
44894-1	CENTER CUTTING EDGE KIT (SNX HDV) ***NEW***	$137.00
83622	CENTER CUTTING EDGE KIT (SNX UTV) ***NEW***	$81.80
PART #	**BACKDRAG EDGES W/HARDWARE**	**LIST**
84463	BACK DRAG EDGE (BD/SNX 7600HD & 7600RD)	$110.00
84464	BACK DRAG EDGE (BD/SNX 8000HD & 8000RD)	$115.00
84466	BACK DRAG EDGE (BD/SNX 8600HD)	$120.00
84465	BACK DRAG EDGE (BD/SNX 9000HD)	$125.00
84461	BACK DRAG EDGE (BD/SNX 8600SW)	$130.00
44282-3	BACK DRAG EDGE 8.5' (HDV) ***NEW***	$283.00
44283-3	BACK DRAG EDGE 9.5' (HDV)***NEW***	$316.00
PART #	**POLY EDGES W/HARDWARE**	**LIST**
B61536	WING & BLADE CUTTING EDGE SET (BD/SNX 8100PP)	$1,082.00
B61537	BLADE CUTTING EDGE (BD/SNX 8100PP)	$648.00
B61538	WING CUTTING EDGE SET (BD/SNX 8100PP)	$581.00
B61539	WING & BLADE CUTTING EDGE SET (BD 8611PP ONLY)	$1,576.00
B61540	BLADE CUTTING EDGE (BD 8611PP ONLY)	$565.00
B61541	WING CUTTING EDGE SET (BD 8611PP ONLY)	$999.00
PART #	**RUBBER EDGES W/HARDWARE**	**LIST**
84530	7600 RUBBER EDGE (SNX 7600HD ONLY)	$355.00
84531	8000 RUBBER EDGE (SNX 8000HD ONLY)	$370.00
84532	8600 RUBBER EDGE (SNX 8600HD ONLY)	$385.00
84533	9000 RUBBER EDGE (SNX 9000HD ONLY)	$400.00

Pricing is subject to change.

Pricing effective as of August 1, 2016

SnowEx Products
531 Ajax Dr.
Madison Heights, MI 48071
snowexproducts.com

TAILGATE SPREADER INSEASON PRICING 2016

UTILITY

PART #	DESCRIPTION	PALLET QTY	LIST
SR-210	3.0 Cu. Ft. WIRELESS	12	$829.00
SP-100	3.0 Cu. Ft. SPREADER w/ELECTRIC GATE	6	$1,486.00
SP-125	3.0 Cu. Ft. AccuSpread SPREADER	6	$896.00
SP-225	3.0 Cu. Ft. UTILITY SPREADER	6	$896.00
SP-325	3.25 Cu. Ft. UTILITY SPREADER	6	$1,233.00

PRO SERIES

PART #	DESCRIPTION	PALLET QTY	LIST
SP-575X-1	5.75 Cu. Ft. Mini PRO SPREADER ***NEW***	4	$1,759.00
SP-1075X-1	10.75 Cu. Ft. PRO SPREADER ***NEW*** (**)	4	$1,944.00

BULK PRO™

PART #	DESCRIPTION	PALLET QTY	LIST
SP-1575-1	5 Cu. Ft. BULK PRO SPREADER ***NEW***	4	$2,899.00
SP-1675	5 Cu. Ft. CENTER DISCHARGE SPREADER	1	$3,521.00
SP-1875-1	9 Cu. Ft. BULK PRO SPREADER ***NEW*** (**)	3	$3,106.00

DROP PRO™

PART #	DESCRIPTION	PALLET QTY	LIST
SD-600	6.0 Cu. Ft. DROP SPREADER (**)	1	$3,381.00
SD-1400	14.0 Cu. Ft. DROP SPREADER	1	$4,291.00

*Pricing listed is per unit, Pallet QTY for reference only - not required to purchase in pallet QTY
**SP-1075X/SP-1675/SP-1875/SD-600 Mounts are not standard

Pricing is subject to change.

Pricing effective as of August 1, 2016

SnowEx Products
531 Ajax Dr.
Madison Heights, MI 48071
snowexproducts.com

HOPPER SPREADERS / LIQUID EQUIPMENT INSEASON PRICING 2016

V-PRO™ TRUCK SPREADERS

PART #	DESCRIPTION	PALLET QTY	LIST
SP-2000	0.4 Cu. Yd. V-Pro Spreader ***NEW***	1	$4,225.00
SP-3000	0.5 Cu. Yd. V-Pro SPREADER	1	$4,436.00
SP-6000	1.0 Cu. Yd. V-Pro SPREADER w/STEP FRAME	1	$4,858.00

V-MAXX™ SPREADERS

PART #	DESCRIPTION	PALLET QTY	LIST
SP-7550	1.5 Cu. Yd. V-Maxx BULK SPREADER	1	$5,871.00
SP-8500	2.2 Cu. Yd. V-Maxx BULK SPREADER	1	$7,790.00
SP-8500H	2.2 Cu. Yd. Hydraulic V-Maxx BULK SPREADER	1	$7,161.00
SP-8550	2.2 Cu. Yd. HIGH FLOW BULK SPREADER	1	$8,323.00
SP-9300	3.2 Cu. Yd. V-Maxx BULK SPREADER	1	$10,404.00
SP-9500	4.0 Cu. Yd. V-Maxx BULK SPREADER	1	$12,735.00

SUPER-MAXX™ SPREADERS

PART #	DESCRIPTION	PALLET QTY	LIST
SP-9300X	3.2 Cu. Yd. Super Maxx BULK SPREADER	1	$10,925.00
SP-9500X	4.0 Cu. Yd. Super Maxx BULK SPREADER	1	$13,267.00
SP-9800X	6.0 Cu. Yd. Super Maxx BULK SPREADER	1	$15,919.00
SP-9300XH	3.2 Cu. Yd. HYDRAULIC Super Maxx BULK SPREADER	1	$9,364.00
SP-9500XH	4.0 Cu. Yd. HYDRAULIC Super Maxx BULK SPREADER	1	$10,825.00
SP-9800XH	6.0 Cu. Yd. HYDRAULIC Super Maxx BULK SPREADER	1	$13,372.00

SnowEx Products
531 Ajax Dr.
Madison Heights, MI 48071
snowexproducts.com

HOPPER SPREADERS / LIQUID EQUIPMENT INSEASON PRICING 2016

ELECTRIC LIQUID EQUIPMENT

PART #	DESCRIPTION	PALLET QTY	LIST
PWS-100	30 GALLON PRE-WET SYSTEM	4	$912.00
PWS-175	75 GALLON PRE-WET SYSTEM	4	$2,171.00
PWS-225	225 GALLON PRE-WET SYSTEM	1	$3,468.00
PWX-200	200 GALLON PRE-WET SYSTEM (SP-9300X only)	1	$2,496.00
PWX-250	250 GALLON PRE-WET SYSTEM (SP-9500X/9800X only)	1	$3,039.00
VSS-1000	100 GALLON ELECTRIC DE-ICING SPRAYER w/48" BOOM	1	$2,713.00
VSS-2000	200 GALLON ELECTRIC DE-ICING SPRAYER w/ 84" boom	1	$5,425.00
VSS-3000	300 GALLON ELECTRIC DE-ICING SPRAYER w/ 84" boom	1	$5,968.00

UNDERTAILGATE

PART #	DESCRIPTION	PALLET QTY	LIST
SP-2200	ELECTRIC POLY UNDER TAILGATE SPREADER	1	$5,809.00
SP-2400	V-Maxx REPLACEABLE TAILGATE SPREADER	1	$5,281.00

V-PRO TOWABLE SPREADERS

PART #	DESCRIPTION	PALLET QTY	LIST
SP-7000	1.4 Cu. Ft. Tow Pro™ SPREADER	1	$9,598.00
SP-1225G	12.0 Cu. Ft. TOWABLE BULK MATERIAL SPREADER	1	$3,371.00

*Pricing listed is per unit, Pallet QTY for reference only - not required to purchase in pallet QTY

SnowEx Products
531 Ajax Dr.
Madison Heights, MI 48071
snowexproducts.com

SPREADER MOUNTS & ACCESSORIES INSEASON PRICING 2016

MOUNTS

PART #	DESCRIPTION	LIST
DRM-175-1	DROP UTILITY MOUNT	$391.00
GRM-175	REAR HITCH MOUNT	$149.00
LDM-175	2" LIGHT-DUTY RECEIVER HITCH	$134.00
PMT-175-1	PIVOT MOUNT FOR SP-1075/1875 ***NEW***	$513.00
PPT-175	PIVOT PAL MOUNT	$291.00
RHT-085	ADAPTER FOR RHT-375 RECEIVER	$187.00
RHT-380	RECEIVER MOUNT	$509.00
SMK-175	7500 MOUNT	$230.00
SSH-175	SKID-STEER MOUNT	$503.00
TLR-175	TRAILER MOUNT	$480.00
TPD-020	3 POINT MOUNT (SD-600/SP-1675)	$201.00
TPM-175	3-POINT MOUNT FOR UTILITY	$258.00
TPM-275	3-POINT MOUNT FOR SP-1075/1875	$446.00
TPR-020	THREE POINT RECEIVER HITCH (SD-600/SP-1675)	$280.00
UBM-175	UTILITY BED MOUNT-175 (SD-600/SP-1675)	$280.00
UMK-175	UNIVERSAL MOUNT KIT	$357.00
UTM-175	UTILITY MOUNT	$258.00
XMT-275	EXPRESS MOUNT	$508.00

TAILGATE ACCESSORIES

PART #	DESCRIPTION	LIST
95059	VIBRATOR KIT FLEET FLEX TAILAGTE ***NEW***	$361.00
52424	LIGHT KIT FLEET FLEX TAILGATE ***NEW***	$77.00
ADF-020	ADJUSTABLE DEFLECTOR	$142.00
GAK-020-1	GATE KIT	$236.00
LHT-020	LIGHT KIT	$85.00
TRK-1575	1575 AUGER TUBE RESTRICTOR KIT	$236.00
TRK-1875	1875 AUGER TUBE RESTRICTOR KIT	$225.00
VAR-020	WEATHER-RESISTANT VARIABLE SPEED CONTROLLER	$236.00
VBR-080	VIBRATOR KIT	$361.00
WSC-020	COVER	$52.00

Pricing is subject to change.

Pricing effective as of August 1, 2016

SnowEx Products
531 Ajax Dr.
Madison Heights, MI 48071
snowexproducts.com

SPREADER MOUNTS & ACCESSORIES INSEASON PRICING 2016

HOPPER ACCESSORIES

PART #	DESCRIPTION	LIST
10741	BATTERY EXTENSION KIT	$59.00
10747	INSTALL,MOUNTING KIT SUPER MAXX	$1,323.00
A4053	HARDWARE KIT	$53.00
D6856	V-MAXX™ RATCHET STRAPS	$174.00
FFK-020	FREE FLOW KIT (7500)	$123.00
OFK-020	OPTIMUM FLOW KIT	$392.00
STX-500	SALT TRAXX®	$1,007.00
STX-550	SALT TRAXX | SUPER MAXX™	$1,007.00
TRK-3000	V-PRO™ AUGER TUBE RESTRICTOR	$248.00
VBR-400	VIBRATOR KIT	$624.00

SNOWBROOM ACCESSORIES

PART #	DESCRIPTION	LIST
DCB-400	DEBRIS COLLECTOR BOX	$600.00
SSB-400	SNOW BLADE | SS-4000	$523.00
76060	HEAVY DUTY SS-4000 BRUSH (YELLOW)	$350.00
SBK-040	STANDARD DUTY SS-4000 BRUSH KIT (RED)	$275.00
SBK-020	MULTI-PURPOSE BRUSH KIT	$275.00

LIQUID ACCESSORIES

PART #	DESCRIPTION	LIST
BNK-020	NOZZLE KIT | BROADCAST	$29.00
HRK-020	100' HOSE REEL KIT	$1,727.00
PBA-010	48" POLY BOOM ASSEMBLY ***NEW***	$730.00
PBA-020	84" POLY BOOM ASSEMBLY	$1,082.00

Pricing is subject to change.

Pricing effective as of August 1, 2016

SnowEx Products
531 Ajax Dr.
Madison Heights, MI 48071
snowexproducts.com

SIDEWALK SOLUTIONS INSEASON PRICING 2016

GEAR PRODUCTS

PART #	DESCRIPTION	PALLET QTY	LIST
SP-05	HEAVY-DUTY HAND SCOOP (12 PACK)	8	$188.00
SP-15	FIBERGLASS SNOW STAKES (6 PACK)	12	$17.00
SP-65	100 lb. CAPACITY BROADCAST PUSH SPREADER	12	$322.00
SP-85	160 lb. CAPACITY BROADCAST PUSH SPREADER	8	$536.00
SP-85SS	160 lb. CAPACITY BROADCAST PUSH SPREADER (STAINLESS)	8	$643.00
SD-95	160 lb. CAPACITY DROP PUSH SPREADER	6	$752.00
SD-95SS	160 lb. CAPACITY DROP PUSH SPREADER (STAINLESS)	6	$858.00
SL-80	PUSH SPRAYER	8	$847.00
SL-80SS	PUSH SPRAYER (STAINLESS)	8	$966.00
SS-4000	40” WALK-BEHIND SNOWBROOM	1	$4,600.00
SB-500	5.0 Cu. Ft. ECONOMY SALT BOX	5	$205.00
SB-550	5.5 Cu. Ft. HEAVY-DUTY SALT BOX	5	$322.00
SB-1000	10.0 Cu. Ft. ECONOMY SALT BOX	5	$247.00
SB-1100	11.0 Cu. Ft. HEAVY-DUTY SALT BOX	5	$429.00
SB-1800	18.0 Cu. Ft. HEAVY-DUTY SALT BOX	3	$536.00

*Pricing listed is per unit, Pallet QTY for reference only - not required to purchase in pallet QTY

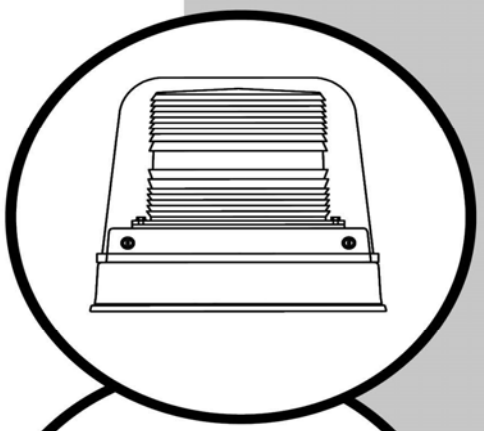

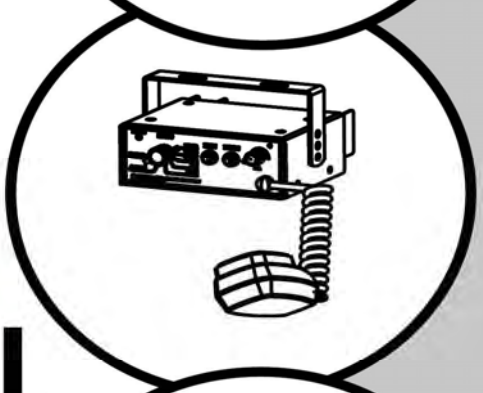

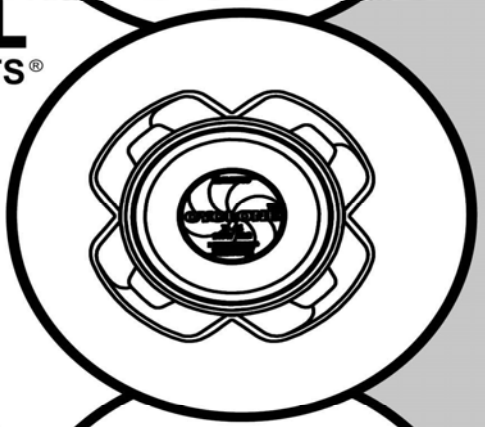

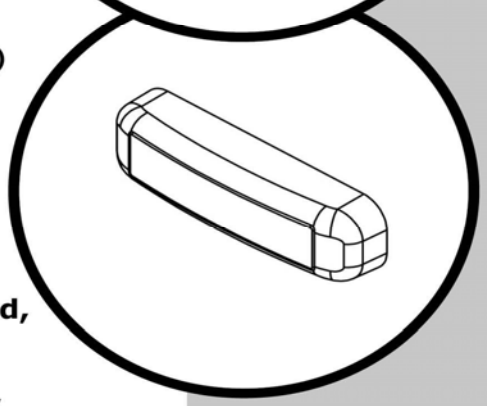

D.O.T. • UTILITY • SECURITY • CONSTRUCTION • POLICE •

STARSIGNAL
VEHICLE PRODUCTS®

STAR WARNING SYSTEMS®

LIST

Version: PL12-1-16B
Effective December 1, 2016
"Proudly Designed, Manufactured, and Assembled in the U.S.A.!"
www.starheadlight.com
An ISO 9001-2008 Certified Company

Star Halo® LED Beacons		
* = Dome colors: A, B, C, G, R		
Model Number	**Description**	**List**
200AH8L-*	Ultra high intensity LEDs, perm. mount, 10-30V	264.32
200AHL-*	High intensity LEDs, perm. mount, 10-30V	243.02
200BH8L-*	Ultra high intensity LEDs, perm. mount, ¾” pipe mount, 10-30V	282.23
200BHL-*	High intensity LEDs, perm. mount, ¾” pipe mount, 10-30V	259.58
200CH8L-*	Ultra high intensity LEDs, perm. mount, 10-30V	232.54
200CHL-*	High intensity LEDs, perm. mount, 10-30V	213.62
200CFH8L-*	Ultra high intensity LEDs, perm. mount, three hole flange base, 10-30V	243.98
200CFHL-*	High intensity LEDs, perm. mount, three hole flange base, 10-30V	221.39
200SH8L-*	Ultra high intensity LEDs, perm. mount, ½” pipe mount, 10-30V	221.39
200SH8LM-*	Ultra high intensity LEDs, mag. mount, 10-16V	237.28
200SHL-*	High intensity LEDs, perm. mount, ½” pipe mount, 10-30V	210.24
200SHLM-*	High intensity LEDs, mag. mount, 10-16V	225.79
240H8AFL-*	Ultra high intensity LEDs, dust cover, flange base, 1” pipe mount, 10-30V	221.39
240H8AL-*	Ultra high intensity LEDs, dust cover, perm. mount, 1” pipe mount, 10-30V	212.26
240H8ALM-*	Ultra high intensity LEDs, dust cover, mag. mount, 10-16V	228.15
240H8CFL-*	Ultra high intensity LEDs, tall lens, flange base, 1” pipe mount, 10-30V	212.26
240H8CGL-*	Ultra high intensity LEDs, tall lens, perm. mount, G-plate, 10-30V	221.39
240H8CL-*	Ultra high intensity LEDs, tall lens, perm. mount, 1” pipe mount, 10-30V	203.48
240H8CLM-*	Ultra high intensity LEDs, tall lens, mag. mount, 10-16V	219.02
240H8SFL-*	Ultra high intensity LEDs, short lens, flange base, 1” pipe mount, 10-30V	203.48
240H8SGL-*	Ultra high intensity LEDs, short lens, perm. mount, G-plate, 10-30V	221.39
240H8SL-*	Ultra high intensity LEDs, short lens, perm. mount, 1” pipe mount, 10-30V	194.35
240H8SLM-*	Ultra high intensity LEDs, short lens, mag. mount, 10-16V	210.24
240HCFL-*	High intensity LEDs, tall lens, flange base, 1” pipe mount, 10-30V	196.38
240HCGL-*	High intensity LEDs, tall lens, perm. mount, G-plate, 10-30V	207.87
240HCL-*	High intensity LEDs, tall lens, perm. mount, 1” pipe mount, 10-30V	187.59
240HCLM-*	High intensity LEDs, tall lens, mag. mount, 10-16V	196.38
240HSFL-*	High intensity LEDs, short lens, flange base, 1” pipe mount, 10-30V	187.59
240HSG1L-*	High intensity LEDs, short lens, perm. mount, 1” pipe mount, G-plate, 10-30V	207.87
240HSGL-*	High intensity LEDs, short lens, perm. mount, G-plate, 10-30V	207.87
240HSL-*	High intensity LEDs, short lens, perm. mount, 1” pipe mount, 10-30V	178.46
240HSLM-*	High intensity LEDs, short lens, mag. mount, 10-16V	187.59
255H8TAL-*	Ultra high intensity LEDs, tall lens, dust cover, perm. mount, 10-30V	190.29
255H8TALV-*	Ultra high intensity LEDs, tall lens, dust cover, vacuum mag. mount, 10-16V	230.51
255H8TCL-*	Ultra high intensity LEDs, tall lens, perm. mount, 10-30V	179.82
255H8TCFL-*	Ultra high intensity LEDs, tall lens, flange mount, 10-30V	179.82
255H8TCLM-*	Ultra high intensity LEDs, tall lens, mag. mount, 10-16V	190.29
255H8TCLV-*	Ultra high intensity LEDs, tall lens, vacuum mag. mount, 10-16V	222.06
255H8TSL-*	Ultra high intensity LEDs, short lens, perm. mount, 10-30V	179.82
255H8TSFL-*	Ultra high intensity LEDs, short lens, flange mount, 10-30V	179.82

255H8TSLM-*	Ultra high intensity LEDs, short lens, mag. mount, 10-16V	190.29
255H8TSLV-*	Ultra high intensity LEDs, short lens, vacuum mag. mount, 10-16V	222.06
255HTCL-*	High intensity LEDs, tall lens, perm. mount, 10-30V	154.46
255HTCFL-*	High intensity LEDs, tall lens, flange mount, 10-30V	154.46
255HTCLM-*	High intensity LEDs, tall lens, mag. mount, 10-16V	169.00
255HTCLV-*	High intensity LEDs, tall lens, vacuum mag. mount, 10-16V	200.77
255HTSL-*	High intensity LEDs, short lens, perm. mount, 10-30V	154.46
255HTSFL-*	High intensity LEDs, shortl lens, flange mount, 10-30V	154.46
255HTSLM-*	High intensity LEDs, short lens, mag. mount, 10-16V	169.00
255HTSLV-*	High intensity LEDs, short lens, vacuum mag. mount, 10-16V	200.77
Star Halo® LED Beacons (continued)		
*** = Dome colors: A, B, C, G, R**		
**** = LED colors: A/B, A/G, A/R, A/W, G/R, R/W**		
Model Number	**Description**	**List**
257H8TAL-*	Ultra high intensity LEDs, tall lens, dust cover, perm. mount, 10-30V	207.53
257H8TALV-*	Ultra high intensity LEDs, tall lens, dust cover, perm. mount, 10-16V	263.30
257H8TCL-*	Ultra high intensity LEDs, tall lens, perm. mount, 10-30V	198.74
257H8TCLV-*	Ultra high intensity LEDs, tall lens, vacuum mag. mount, 10-16V	254.18
257H8TSL-*	Ultra high intensity LEDs, short lens, perm. mount, 10-30V	198.74
257H8TSLV-*	Ultra high intensity LEDs, short lens, vacuum mag. mount, 10-16V	254.18
257HTCL-*	High intensity LEDs, tall lens, perm. mount, 10-30V	172.72
257HTCLV-*	High intensity LEDs, tall lens, vacuum mag. mount, 10-16V	228.49
257HTSL-*	High intensity LEDs, short lens, perm. mount, 10-30V	172.72
257HTSLV-*	High intensity LEDs, short lens, vacuum mag. mount, 10-16V	228.49
251H8TAL-*	Ultra high intensity LEDs, tall lens, dust cover, perm. mount, 10-30V	234.57
251H8TAL-BG-*	Ultra high intensity LEDs, tall lens, dust cover, branch guard, perm. mount, 10-30V	258.23
251H8TCL-*	Ultra high intensity LEDs, tall lens, perm. mount, 10-30V	223.76
251H8TCL-BG-*	Ultra high intensity LEDs, tall lens, branch guard, perm. mount, 10-30V	247.42
251H8TSL-*	Ultra high intensity LEDs, short lens, perm. mount, 10-30V	223.76
251H8TSL-BG-*	Ultra high intensity LEDs, short lens, branch guard, perm. mount, 10-30V	247.42
251HTAL-*	High intensity LEDs, tall lens, dust cover, perm. mount, 10-30V	220.38
251HTAL-BG-*	High intensity LEDs, tall lens, dust cover, branch guard, perm. mount, 10-30V	249.11
251HTCL-*	High intensity LEDs, tall lens, perm. mount, 10-30V	214.97
251HTCL-BG-*	High intensity LEDs, tall lens, branch guard, perm. mount, 10-30V	238.29
251HTSL-*	High intensity LEDs, short lens, perm. mount, 10-30V	214.97
251HTSL-BG-*	High intensity LEDs, short lens, branch guard, perm. mount, 10-30V	238.29
BB274-251DK	Target tech adaptor Kit, includes bottom dish, case spinning, gasket, and hardware	68.61
BB274-251K	Target tech adaptor kit, includes case spinning, J bolts, rubber bottom gasket, and hardware	50.70
200ZHL-*	Die cast base, perm. mount, 10-16V	135.20
200ZHLM-*	Die case base, mag. mount, 10-16V	153.11
200ZHRL-*	Rotating pattern, die cast base, perm. mount, 10-30V	152.10
200ZHRLM-*	Rotating pattern, die case base, mag. mount, 10-16V	167.99
200AHDL-**	Dual color, dust cover, clear lens, perm. mount, 10-30V	288.65
200SHDL-**	Dual color, die cast base, clear lens, perm. mount, ½” pipe mount, 10-30V	242.01

200SHDLM-**	Dual color, die cast base, clear lens, mag. mount, 10-16V	257.56
258HTDAL-**	Dual color, tall clear lens, dust cover, polycarbonate base, three hole perm. mount, 1” pipe mount, 10-30V	200.77
258HTDALV-**	Dual color, tall clear lens, dust cover, polycarbonate base, vacuum mag. mount, 10-16V	253.50
258HTDCL-**	Dual color, tall clear lens, polycarbonate base, three hole perm. mount, 1” pipe mount, 10-30V	196.72
258HTDCLV-**	Dual color, tall clear lens, polycarbonate base, vacuum mag. mount, 10-16V	243.02
258HTDSL-**	Dual color, short clear lens, polycarbonate base, three hole perm. mount, 1” pipe mount, 10-30V	196.72
258HTDSLV-**	Dual color, short clear lens, polycarbonate base, vacuum mag. mount, 10-16V	243.02
LED Beacons		
*** = Dome colors: A, B, C, G, R**		
Model Number	**Description**	**List**
256TCL-*	Tall lens, three hole perm. mount, 1” pipe mount, 10-30V	74.02
256TCFL-*	Tall lens, flange mount, 10-30V	74.02
256TCLM-*	Tall lens, mag. mount, 10-16V	90.92
256TCLV-*	Tall lens, vacuum mag. mount, 10-16V	124.72
256TSL-*	Short lens, three hole perm. mount, 1” pipe mount, 10-30V	74.02
256TSFL-*	Short lens, flange mount, 10-30V	74.02
256TSLM-*	Short lens, mag. mount, 10-16V	90.92
256TSLV-*	Short lens, vacuum mag. mount, 10-16V	124.72
LED Beacons (Continued)		
*** = Dome colors: A, B, C, G, R**		
Model Number	**Description**	**List**
240CFL-*	Tall lens, flange base, perm. mount, 10-30V	90.25
240SFL-*	Short lens, flange base, perm. mount, 10-30V	90.25
Compact LED Beacons		
*** = Dome colors: A, B, C, G, R**		
Model Number	**Description**	**List**
200ZL-*	360° beacon, die cast base, perm. mount, ½” pipe mount, 10-16V	82.81
200ZL-110-*	360° beacon, die cast base, perm. mount, ½” pipe mount, 10-110V	99.71
200ZLM-*	360° beacon, die cast base, mag. mount, 10-16V	98.70
201ZL-*	360° beacon, perm. mount, ½” pipe mount, 10-16V	67.94
201ZL-110-*	360° beacon, perm. mount, ½” pipe mount, 10-110V	81.46
201ZLM-*	360° beacon, mag. mount, 10-16V	83.49
203MVL-*	360° beacon, flange base, perm. mount, ½” pipe mount, 10-16V	61.52
203MVL-110-*	360° beacon, flange base, perm. mount, ½” pipe mount, 10-110V	71.99
203MVLM-*	360° beacon, mag. mount, 10-16V	77.40
204MVL-*	360° beacon, flange base, perm. mount, ½” pipe mount, 10-16V	65.57
204MVL-110-*	360° beacon, flange base, perm. mount, ½” pipe mount, 10-110V	76.05
Strobe Beacons		
*** = Dome colors: A, B, C, G, R**		

Model Number	**Description**	**List**
200A-12V-*	S/D/Q flash, tall lens, dust cover, perm. mount, 12-24V	186.58
200ADH-12V-*	High power, double flash, tall lens, dust cover, perm. mount, 12-24V	236.60
200AQH-12V-*	High power, quad flash, tall lens, dust cover, perm. mount, 12-24V	250.12
200B-12V-*	S/D/Q flash, tall lens, dust cover, perm. mount, 12-24V	196.38
200BDH-12V-*	High power, double flash, tall lens, dust cover, perm. mount, 12-24V	236.60
200BQH-12V-*	High power, quad flash, tall lens, dust cover, perm. mount, 12-24V	252.82
200C-12V-*	S/D/Q flash, perm. mount, 12-24V	162.58
200CF-12V-*	S/D/Q flash, flange base, perm. mount, 12-24V	157.85
200E-*	Single flash, high/low, perm. mount, or ¾" mount, 117V	182.86
250A-12V-*	S/D/Q flash, tall lens, dust cover, die cast base, perm. mount, 12-24V	176.10
250ADH-12V-*	High power, double flash, tall lens, dust cover, die cast base, perm. mount, 12-24V	216.66
250AH-12V-*	S/D/Q, high power, tall lens, dust cover, die cast base, perm. mount, 12-24V	203.48
250AQH-12V-*	High power, quad flash, tall lens, dust cover, die cast base, perm. mount, 12-24V	224.43
250C-12V-*	S/D/Q flash, tall lens, die cast base, perm. mount, 12-24V	166.97
250CDH-12V-*	High power, double flash, tall lens, die cast base, perm. mount, 12-24V	206.86
250CH-12V-*	S/D/Q, high power, tall lens, die cast base, perm. mount, 12-24V	194.01
250CQH-12V-*	High power, quad flash, tall lens, die cast base, perm. mount, 12-24V	213.62
250S-12V-*	S/D/Q flash, short lens, die cast base, perm. mount, 12-24V	157.85
250SDH-12V-*	High power, double flash, short lens, die cast base, perm. mount, 12-24V	198.41
250SH-12V-*	S/D/Q, high power, short lens, die cast base, perm. mount, 12-24V	185.22
250SQH-12V-*	High power, quad flash, short lens, die cast base, perm. mount, 12-24V	205.17
Strobe Beacons (continued)		
*** = Dome colors: A, B, C, G, R**		
Add $10.00 for AC voltage option (not available for all lights)		
Model Number	**Description**	**List**
255HTC-*	D/Q flash, tall twist on/off lens, photocell, flange base, perm. mount, 12-24V	129.12
255HTCM-*	D/Q flash, tall twist on/off lens, photocell, flange base, mag. mount, 12V	144.33
255HTCV-*	D/Q flash, tall twist on/off lens, photocell, flange base, vacuum mag. mount, 12V	184.21
255TC-*	S/D/Q flash, tall twist on/off lens, flange base, perm. mount, 12-48V	83.82
255TCM-*	S/D/Q flash, tall twist on/off lens, flange base, mag. mount, 12V	99.37
255TCV-*	S/D/Q flash, tall twist on/off lens, flange base, vacuum mag. mount, 12V	138.92
255TS-*	S/D/Q flash, short twist on/off lens, flange base, perm. mount, 12-48V	83.82
255TSM-*	S/D/Q flash, short twist on/off lens, flange base, mag. mount, 12V	99.37
255TSV-*	S/D/Q flash, short twist on/off lens, flange base, vacuum mag. mount, 12V	138.92
200S-12V-*	S/D/Q flash, medium profile, die cast base, perm. mount, 12-24V	134.86

200SM-12V-*	S/D/Q flash, medium profile, die cast base, mag. mount, 12V	150.75
240C-12V-*	S/D/Q flash, tall lens, die cast base, perm. mount, ½” pipe mount, 12-24V	127.09
240CF-12V-*	S/D/Q flash, tall lens, die cast base, flange base, perm. mount, ½” pipe mount, 12-24V	129.79
240CM-12V-*	S/D/Q flash, tall lens, die cast base, mag. mount, 12V	142.64
240S-12V-*	S/D/Q flash, short lens, die cast base, perm. mount, ½” pipe mount, 12-24V	127.09
240SF-12V-*	S/D/Q flash, short lens, die cast base, flange base, perm. mount, ½” pipe mount, 12-24V	129.79
240SM-12V-*	S/D/Q flash, short lens, die cast base, mag. mount, 12V	142.64
242CFL-12V-*	D/Q flash, tall lens, photocell, die cast base, flange base, perm. mount, ½” pipe mount, 12-24V	136.55
242CL-12V-*	D/Q flash, tall lens, photocell, die cast base, perm. mount, ½” pipe mount, 12-24V	138.24
242CLM-12V-*	D/Q flash, tall lens, photocell, die cast base, mag. mount, 12V	154.13
242SFL-12V-*	D/Q flash, short lens, photocell, die cast flange base, perm. mount, ½” pipe mount, 12-24V	136.55
242SL-12V-*	D/Q flash, short lens, photocell, die cast base, perm. mount, ½” pipe mount, 12-24V	138.24
242SLM-12V-*	D/Q flash, short lens, photocell, die cast base, mag. mount, 12V	154.13
241S-12V-*	S/D/Q flash, perm. mount, ½” pipe mount, 12-24V	127.09
241SF-12V-*	S/D/Q flash, flange base, perm. mount, ½” pipe mount, 12-24V	129.79
241SM-12V-*	S/D/Q flash, mag. mount, 12V	142.64
211R-12V-*	Single flash, rubber base, perm. mount on two studs on 4 ⅛” centers, 12V	86.19
211RM-12V-*	Single flash, rubber base, mag. mount, 12V	103.09
211RMQ-12V-*	Quad flash, rubber base, mag. mount, 12V	107.82
211RQ-12V-*	Quad flash, rubber base, perm. mount on two studs on 4 ⅛” centers, 12V	90.25
200Z-12V-*	Single flash, die cast base, perm. mount, ½” pipe mount, 12V	68.95
200ZM-12V-*	Single flash, die cast base, mag. mount, 12V	86.19
200ZMQ-12V-*	Quad flash, die cast base, mag. mount, 12V	92.95
200ZQ-12V-*	Quad flash, die cast base, perm. mount, ½” pipe mount, 12V	76.39
201Z-12V-*	Single flash, snap on lens, perm. mount, ½” pipe mount, 12V	57.46
201ZM-12V-*	Single flash, snap on lens, mag. mount, 12V	68.95
201ZMQ-12V-*	Quad flash, snap on lens, mag. mount, 12V	74.36
201ZQ-12V-*	Quad flash, snap on lens, perm. mount, ½” pipe mount, 12V	62.19
203MV-*	Low profile, twist off/on lens, flange base, perm. mount, 10-72V	68.28
203MVM-*	Low profile, twist off/on lens, flange base, mag. mount, 10-72V	81.12
204MV-*	Low profile, twist off/on lens, flange base, perm. mount, 10-110V	73.34
200J-12V-*	Single flash, medium profile, flange base, perm. mount, ½” pipe mount, 12V	84.16
200JQ-12V-*	Quad flash, medium profile, flange base, perm. mount, ½” pipe mount, 12V	91.60
200J-1-12V-*	Single flash, outer dome, medium profile, flange base, perm. mount, ½” pipe mount, 12V	93.29
200JQ-1-*	Quad flash, outer dome, medium profile, flange base, perm. mount, ½” pipe mount, 12V	100.05
200U-*	Single flash, medium profile, flange base, perm. mount, ½” pipe mount, 110V	153.45
200U-1-*	Single flash, outer dome, medium profile, flange base, perm. mount, ½” pipe mount, 110V	194.35
Strobe Beacons (continued)		
*** = Dome colors: A, B, C, G, R**		
Add $10.00 for AC voltage option (not available for all lights)		

Model Number	Description	List
735PS-*	Single flash, portable strobe, 360° lens, Safety Orange plastic base, perm. mount, requires (2) 6V batteries	85.18
735PSM-*	Single flash, portable strobe, 360° lens, Safety Orange plastic base, mag. mount, requires (2) 6V batteries	106.47
845S-12V-*	Single flash, unidirectional, self contained, Amber or Red only, 12V	145.34
845SQ-12V-*	Quad flash, unidirectional, self contained, Amber or Red only, 12-24V	157.17
Revolving and Flashing Beacons		
*** = Dome colors: A, B, C, G, R, M**		
Model Number	**Description**	**List**
450A-12V-*	Standard duty, rotating, open base, perm. mount, 12V	97.01
450AH-12V-*	Halogen, high intensity, rotating, open base, perm. mount, 12V	102.08
450B-12V-*	Standard duty, rotating, enclosed base, perm. mount, 12V	99.37
450BH-12V-*	Halogen, high intensity, rotating, enclosed base, perm. mount, 12V	106.47
455BH-12V-*	Standard duty, rotating, enclosed base, perm. mount, 12V	127.08
455BHF-12V-*	Halogen, high intensity, rotating, enclosed base, perm. mount, 12V	127.08
455BHV-12V-*	Halogen, high intensity, rotating, vacuum mag. mount, 12V	152.44
20RH-12V-*	Halogen, high intensity, rotating, die cast base, perm. mount, 12V	75.37
20RHF-12V-*	Halogen, high intensity, fast rotator, die cast base, perm. mount, 12V	71.66
20RHM-12V-*	Halogen, high intensity, rotating, die cast base, mag. mount, 12V	90.58
20RI-12V-*	Incandescent, standard duty, die cast base, perm. mount, 12V	69.29
20RIF-12V-*	Incandescent flashing, standard duty, die cast base, perm. mount, 12V	69.29
20RIM-12V-*	Incandescent, standard duty, die cast base, mag. mount, 12V	85.18
Halogen Dash Lights and Accessories		
*** = Dome colors: A, B, C, G, R, M**		
Model Number	**Description**	**List**
1188H-*	Hotshot II, halogen, perm. mount, 12V	92.61
1188HM-*	Hotshot II, halogen, mag. mount, 12V	93.96
1166HM*	Teardrop, halogen, mag. mount, 12V	101.40
1166IM-*	Teardrop, incandescent, mag. mount, 12V	99.37
1169H*	Pancake, halogen, low profile, perm. mount, 12V	79.09
1169HM-*	Pancake, halogen, low profile, mag. mount, 12V	93.96
274-874	Dash bracket, suction cups	45.29
274-878	Multiple flash adaptor, mirror array for 1188H series	25.69
Flashing Beacons Very Low Profile		
*** = Dome colors: A, B, C, G, R**		
Model Number	**Description**	**List**
20ZI-12V-*	Flashing, incandescent, die cast base, perm. mount, 12V	50.36
20ZIM-12V-*	Flashing, incandescent, die cast base, mag. mount, 12V	53.40

21ZI-12V-*	Flashing, incandescent, polycarbonate base, perm. mount, 12V	39.88
21ZIM-12V-*	Flashing, incandescent, polycarbonate base, mag. mount, 12V	65.91
Flashing Beacons Very Low Profile (Continued)		
*** = Dome colors: A, B, C, G, R**		
Model Number	**Description**	**List**
20FI-1-12V-*	Flashing, incandescent, clear outer dome, die cast base, retaining ring, mag. mount, 12V	79.09
20FI-*	Flashing, incandescent, die cast base, retaining ring, perm. mount, 12V	70.98
735-FI-SB-PC-*	Portable strobe, steady burn/flashing/on/off, Safety Orange case, 6V - steady burn	81.46
LED Lights		
*** = LED colors: A, B, G, R, W**		
Model Number	**Description**	**List**
DLXT-121-**	Single head, perimeter standard warning, black rectangular bezel, 10-16V	74.02
DLXT-121C**	Single head, perimeter standard warning, chrome rectangular bezel, 10-16V	77.40
DLXT-124-**	Single head, perimeter standard warning, black oval bezel, 10-16V	74.02
DLXT-124C**	Single head, perimeter standard warning, chrome oval bezel, 10-16V	77.40
DLXT-241-**	Single head, perimeter standard warning, black rectangular bezel, 24V	90.25
DLXT-241C**	Single head, perimeter standard warning, chrome rectangular bezel, 24V	94.98
DLXT-244-**	Single head, perimeter standard warning, black oval bezel, 24V	90.25
DLXT-244C**	Single head, perimeter standard warning, chrome oval bezel, 24V	94.98
DLXT-2CUST	Double head, perimeter standard warning, black rectangular bezel, 10-16V	158.18
DLXT-2CUST	Double head, perimeter standard warning, black rectangular bezel, 24V	180.49
DLXT-2CUST	Double head, perimeter standard warning, chrome rectangular bezel, 10-16V	167.65
DLXT-2CUST	Double head, perimeter standard warning, chrome rectangular bezel, 24V	189.96
DLXT-3CUST	Triple head, perimeter standard warning, black rectangular bezel, 10-16V	237.28
DLXT-3CUST	Triple head, perimeter standard warning, black rectangular bezel, 24V	270.74
DLXT-3CUST	Triple head, perimeter standard warning, chrome rectangular bezel, 10-16V	251.47
DLXT-3CUST	Triple head, perimeter standard warning, chrome rectangular bezel, 24V	284.93
DLHT-121-**	Single head, hazard turn, black rectangular bezel, 10-16V	79.09
DLHT-121CAA	Single head, hazard turn, chrome rectangular bezel, Amber, 10-16V	83.82
DLHT-124-**	Single head, hazard turn, black oval bezel, Amber, 10-16V	79.09
DLHT-124CAA	Single head, hazard turn, chrome oval bezel, 10-16V	83.82
DLHT-241-**	Single head, hazard turn, black rectangular bezel, 24V	90.25
DLHT-241CAA	Single head, hazard turn, chrome rectangular bezel, 24V	94.98
DLHT-244-**	Single head, hazard turn, black oval bezel, Amber, 24V	90.25
DLHT-244CAA	Single head, hazard turn, chrome oval bezel, Amber, 24V	94.98
DLTT-121-**	Single head, auxiliary stop/tail/turn, black rectangular bezel, 10-16V	79.09
DLTT-121CAA	Single head, auxiliary stop/tail/turn, chrome rectangular bezel, 10-16V	83.82
DLTT-124-**	Single head, auxiliary stop/tail/turn, black oval bezel, 10-16V	79.09
DLTT-124CAA	Single head, auxiliary stop/tail/turn, chrome oval bezel, 10-16V	83.82
DLTT-241-**	Single head, auxiliary stop/tail/turn, black rectangular bezel, 24V	90.25
DLTT-241CAA	Single head, auxiliary stop/tail/turn, chrome rectangular bezel, 24V	94.98
DLTT-244-**	Single head, auxiliary stop/tail/turn, black oval bezel, 24V	90.25

DLTT-244CAA	Single head, auxiliary stop/tail/turn, chrome oval bezel, 24V	94.98
DLNT-121-**	Single head, steady burn, black rectangular bezel, 10-16V	67.94
DLNT-121S-**	Single switch, black bezel, 10-16V	72.33
DLNT-121SC**	Single switch, chrome bezel, 10-16V	77.06
DLNT-122S-**	Double switch, black bezel, 10-16V	144.33
DLNT-122SC**	Double switch, chrome bezel, 10-16V	149.06
274-DLXT-1X2	DLXT mounting bracket, one row of two LED lights	20.28
274-DLXT-2X1	DLXT mounting bracket, two rows of one LED light	13.52
274-DLXT-45	DLXT mounting bracket, 45° angle	10.14
274-DLXT-RL	DLXT mounting bracket, license plate	20.28
274-DLXT-T	DLXT mounting bracket, trunk	13.52
LED Lights (continued)		
*** = LED colors: A, B, G, R, W**		
Model Number	**Description**	**List**
274-DLXT-U	DLXT mounting bracket, universal	13.52
274-DLXT-W	DLXT mounting bracket, window	13.52
BB274-DLXT-LPB	DLXT mounting bracket, six (three on each side) on license plate	36.17
274-DLX4-6-1X2	Versa Star® mounting bracket, one row of two LED lights	13.52
274-DLX4-6-2X1	Versa Star® mounting bracket, two rows of one LED lights	13.52
274-DLX4-6-45	Versa Star® mounting bracket, 45° angle	13.52
274-DLX4-6-HK	Versa Star® mounting bracket, DLX4-HK and DLX6-HK headliner	13.52
274-DLX4-6-RL	Versa Star® mounting bracket, license plate	20.28
274-DLX4-6-T	Versa Star® mounting bracket, trunk	13.52
274-DLX4-6-U	Versa Star® mounting bracket, universal	10.14
274-DLX4-6-W	Versa Star® mounting bracket, window	10.14
BB274-DLX46LPM	Versa Star® mounting bracket, adjustable license plate bracket	26.36
BB274-DLX4-6-RHK	Versa Star® mounting bracket, rear window of a pickup truck, mounts to the hanger clips	20.28
BB274-DLX4-6-RSB	Ford Interceptor SUV spoiler bracket kit, fits 2012-2016 models	59.15
BB274-DLX4-6-SLP	Versa Star® mounting bracket, rear window of a pickup truck	20.28
BB274-DLX6-BAIL	Versa Star® mounting bracket, bail bracket	21.97
BB274-DLX-VC	Versa Star® mounting bracket, visor clip	32.79
BB274-FISUV-VER	Ford Interceptor SUV headlight bracket kit, mounts DLX3, DLX4, DLX6F in the headlight of 2016 Police Ford Interceptor SUV (lights not included)	20.28
BB274-FISUV-GRL	Ford Interceptor SUV front grille bracket kit, mounts DLX3, DLX4, DLX6F (lights not included)	55.79
DLX3-*	Versa Star®, three LED array, black bezel, flush or bracket mount, 10-16V	74.02
DLX3H-A	Versa Star®, high power, three LED array, black bezel, Amber only, flush or bracket mount, 10-16V	82.47
DLX4-**	Versa Star®, four LED array, black bezel, flush or bracket mount, 10-30V	88.89
DLX4C-**	Versa Star®, four LED array, chrome bezel, flush or bracket mount, 10-30V	99.37
DLX6-**	Versa Star®, six LED array, black bezel, bracket mount, 10-30V	126.75
DLX6C-**	Versa Star®, six LED array, chrome bezel, bracket mount, 10-30V	137.57
DLX6F-**	Versa Star®, six LED array, black bezel, flush mount, 10-30V	95.32
DLX6FC-**	Versa Star®, six LED array, chrome bezel, flush mount, 10-30V	105.79

DLX4-HK-**	Versa Star®, four LED array, black bezel, flashback hood, cig. plug, 10-16V	167.31
DLX4-HK-1**	Versa Star®, four LED array, black bezel, flashback hood, hardwire, 10-30V	167.31
DLX4-HK2-**	Versa Star®, dual four LED array, black bezel, flashback hood, cig. plug, 10-16V	333.94
DLX4-HK2-1**	Versa Star®, dual four LED array, black bezel, flashback hood, hardwire, 10-30V	333.94
DLX6-HK-**	Versa Star®, six LED array, black bezel, flashback hood, cig. plug, 10-16V	201.11
DLX6-HK-1**	Versa Star®, six LED array, black bezel, flashback hood, hardwire, 10-30V	201.11
DLX6-HK2-**	Versa Star®, dual six LED array, black bezel, flashback hood, cig. plug, 10-16V	401.88
DLX6-HK2-1**	Versa Star®, dual six LED array, black bezel, flashback hood, hardwire, 10-30V	401.88
BBK6VER-1-FISUV	Ford Interceptor SUV spoiler bracket kit with six BKDLX6F-** heads	845.00
BBK6VER-1-TA	Chevy Tahoe SUV spoiler bracket kit with six BKDLX6F-** heads	845.00
DLHTHR-1-*	4” round, bezel, hazard turn, 10-30V	127.76
DLHTHR-4-*	4” round, grommet, hazard turn, 10-30V	127.76
DLNTHR-1-*	4” round, bezel, steady burn, 10-30V	84.50
DLNTHR-4-*	4” round, grommet, steady burn, 10-30V	84.50
DLNTHR-5CW	4” round, chrome ring, steady burn, 10-30V, white LED, clear lens	84.50
DLXTHR-1-*	4” round, bezel, flashing, 10-30V	95.32
DLXTHR-2-*	4” round, connector, flashing, 10-30V	105.79
DLXTHR-3-*	4” round, tractor housing, flashing, 10-30V	105.79
DLXTHR-3K-**	4” round kit, tractor housing, flashing, 10-30V	211.58
DLXTHR-4-*	4” round, grommet, flashing, 10-30V	84.50
DLXTHR-5CA	4” round, chrome ring, flashing, 10-30V, warm white LED, amber lens	95.32
DLXTHR-7-*	4” round, window bezel, flashing, 10-30V	84.50
DLXTHR-8-*	4” round, grommet and connector, flashing, 10-30V	127.76
LED Lights (continued)		
*** = LED colors: A, B, C, G, R**		
Model Number	**Description**	**List**
DLHTHU-1-*	6” oval, bezel, hazard turn, 10-30V	127.76
DLHTHU-4-*	6” oval, grommet, hazard turn, 10-30V	127.76
DLNTHU-1-*	6” oval, bezel, steady burn, 10-30V	84.50
DLXTHU-1-*	6” oval, bezel, flashing, 10-30V	95.32
DLXTHU-2-*	6” oval, connector, flashing, 10-30V	105.79
DLXTHU-4-*	6” oval, grommet, flashing, 10-30V	84.50
DLXTHU-7-*	6” oval, window bezel, flashing, 10-30V	84.50
DLXTHU-8-*	6” oval, grommet and connector, flashing, 10-30V	127.76
DLXTHU-9-*	6” oval, ambulance insert, flashing, 10-30V	127.76
LDH-361-S-*	Par 36, steady burn, sealed beam, spot optics, 10-30V	135.54
LDH-361-T-*	Par 36, steady burn, sealed beam, trapezoidal optics, 10-30V	135.54
LDH-362-E-*	Par 36, steady burn, swivel mount, wide spread optics, 10-30V	169.34
LDH-362-S-*	Par 36, steady burn, swivel mount, spot optics, 10-30V	169.34
LDH-362-T-*	Par 36, steady burn, swivel mount, trapezoidal optics, 10-30V	169.34
LDH-363M-S-*	Par 36, steady burn, rubber tractor housing, spot optics, mag. mount, 10-16V	183.53
LDH-363M-T-*	Par 36, steady burn, rubber tractor housing, trapezoidal optics, mag. mount, 10-16V	183.53
LDH-363-E-*	Par 36, steady burn, rubber tractor housing, wide spread optics, 10-30V	176.10
LDH-363-S-*	Par 36, steady burn, rubber tractor housing, spot optics, 10-30V	176.10
LDH-363-T-*	Par 36, steady burn, rubber tractor housing, trapezoidal optics, 10-30V	176.10

LDH-364-E-*	Par 36, steady burn, rubber grommet mount, wide spread optics, 10-30V	171.70
LDH-364-S-*	Par 36, steady burn, rubber grommet mount, spot optics, 10-30V	169.34
LDH-364-T-*	Par 36, steady burn, rubber grommet mount, trapezoidal optics, 10-30V	169.34
LDHF362-E-*	Par 36, flashing, swivel mount, wide spread optics, 10-30V	180.49
LDHF362-T-*	Par 36, flashing, swivel mount, trapezoidal optics, 10-30V	180.49
LDHF362-S-*	Par 36, flashing, swivel mount, spot optics, 10-30V	180.49
LDHF363-E-*	Par 36, flashing, rubber tractor mount, wide spread optics, 10-30V	191.98
LDHF363-T-*	Par 36, flashing, rubber tractor mount, trapezoidal optics, 10-30V	191.98
LDHF364-E-*	Par 36, flashing, rubber grommet mount, wide spread optics, 10-30V	184.89
LDHF364-T-*	Par 36, flashing, rubber grommet mount, trapezoidal optics, 10-30V	184.89
LDHT362-T-*	Par 36, hazard turn, swivel mount, spot optics, 10-30V	234.57
LDHT363-T-*	Par 36, hazard turn, rubber tractor housing, spot optics, 10-30V	234.57
LDHT364-T-*	Par 36, hazard turn, rubber grommet mount, spot optics, 10-30V	234.57
DL15-12-**	11” LED dash light, suction cup mount, cig. plug, 10-16V	448.86
DL15-12W-**	11” LED deck light, weatherproof, 12’ cable, perm. mount, 10-16V	448.86
DL15-6-*	6” LED dash light, suction cup mount, cig. plug, 10-16V	257.89
DL15-6GMB-*	6” LED dash light kit, grille mount, 12’ cable, 10-16V	263.98
DL15-6MMB-*	6” LED dash light kit, mirror mount, cig. plug, 10-16V	263.98
DL15-6W-*	6” LED deck light, weatherproof, 12’ cable, perm. mount, 10-16V	257.89
DL15-6W-1K-**	6” LED deck light kit, weatherproof, 12’ cable, perm. mount, 10-16V	598.26
ULB9S-**	Starburst flashing, cig. plug, 10-16V	223.76
ULB9S-1-**	Starburst flashing, 12’ cable, sync. capability, 10-16V	223.76
FLKULB9S-**	Starburst flashing, dual head, with cig. plug, 10-16V	442.10
RLKULB9S-1-**	Starburst flashing light kit, dual head, rear mounting, 12’ cable, sync. capability, 10-16V	442.10
ULB9E-**	Eight mid power LEDs, cig. plug, 10-16V	126.75
ULB9E-1-**	Eight mid power LEDs, 12’ cable, 10-16V	126.75
RLKULB9E-1-**	Flashing light kit, dual head, rear mounting, 12’ cable, sync. capability, 10-16V	248.09
ULB9LDC-**	Dual color, Lineum X™, cig .plug, 10-16V	243.02
ULB9LDC-1-**	Dual color, Lineum X™, 12’ cable, 10-16V	243.02
DLS306-*	Mini-Comet™, spherical, black bezel, 10-30V	116.27
DLS306C-*	Mini-Comet™, spherical, chrome bezel, 10-30V	126.75
LED Lights (continued)		
*** = LED colors: A, B, C, G, R**		
Model Number	**Description**	**List**
DLITE-**	MicroStar™, wide spread,black bezel, flush mount, 10-30V	99.37
DLITS-**	MicroStar™, spot, black bezel, flush mount 10-30V	99.37
DLITE-9-**	Two MicroStar™ lights in ambulance insert, wide spread,black bezel, flush mount, 10-30V,	198.74
274-DLIT-RL	MicroStar™, licence plate bracket kit	30.42
274-DLIT-U	MicroStar™, universal bracket kit	16.90
VL22-**	LED visor light, Auto-Tilt™, 10-16V only avaliable in blue, and red/blue	232.54

Star Constellation™

***=LED colors: A, B, C, G, R**

Model Number	Description	List
BK200ZHRL-*	Star Constellation™, Halo® rotating beacon, die cast base, 18” cable and connector, 10-30V	160.55
BK200ZHRLP-*	Star Constellation™, Halo® rotating beacon, die cast base, ¾” pipe mount, 18” cable and connector, 10-30V	160.55
BK255H8TCL-*	Star Constellation™, Halo® beacon, tall lens, 18” cable and connector, 10-30V	188.26
BK255H8TSL-*	Star Constellation™, Halo® beacon, short lens, 18” cable and connector, 10-30V	188.26
BK9016LED-*	Star Constellation™, Mini-bar, 30” cable and connector, 10-30V	527.61
BK9100LED-*	Star Constellation™, Contour™, mini-bar, 30” cable and connector, 10-30V	323.46
BKDLITE-**	Star Constellation™, MicroStar™, wide spread, 6” cable and connector, 10-30V	107.82
BKDLITS-**	Star Constellation™, MicroStar™, spot, 6” cable and connector, 10-30V	107.82
BKDLS306-*	Star Constellation™, Mini-Comet™, omni-directional, black bezel, 10-30V	133.17
BKDLX3-*	Star Constellation™, three LED array, black bezel, 6” cable and connector, 10-16V	88.22
BKDLX4-**	Star Constellation™, four LED array, black bezel, 6” cable and connector, 10-30V	97.34
BKDLX6F-**	Star Constellation™, six LED array, black bezel, 6” cable and connector, 10-30V	103.76
BKDLXT-121-**	Star Constellation™, thinline, perimeter, 6” cable and connector, black rectangular bezel, 10-30V	101.06
BKDLXTHR-*	Star Constellation™, 4” round, 6” cable and connector, 10-30V	122.69
BKDLXTHU-*	Star Constellation™, 6" oval, 6” cable and connector, 10-30V	122.69
BKLD418-2	Star Constellation™, 6 outlet junction box controller	53.07
BKLDHF311-A-10	Star Constellation™, spherical in-line, 18” head side cable, 10’ cable and connector, 12-24V	160.55
BKSWH-346-5	Star Constellation™, 5' cable and connector, 105°C	32.79
BKSWH-346-10	Star Constellation™, 10’ cable and connector, 105°C	38.19
BKSWH-346-18	Star Constellation™, 18' cable and connectors, 105°C	54.42
BKSWH-346-19	Star Constellation™, 19’ cable and connectors, 105°C	57.79
BKSWH-346-23	Star Constellation™, 23' cable and connectors, 105°C	63.21
BKSWH-346-24	Star Constellation™, 24’ cable and connectors, 105°C	66.92
BKSWH-357-18	Star Constellation™, 18' cable and connector, 125°C	47.32
BKSWH-357-23	Star Constellation™, 23' cable and connector, 125°C	52.05
BKSWH-361-10	Star Constellation™, 10’ cable and connector, 125°C	40.56
BKSWH-361-14	Star Constellation™, 14' cable and connector, 125°C	47.32
BKSWH-361-16	Star Constellation™, 16’ cable and connector, 125°C	55.43
BKSWH-361-18	Star Constellation™, 18’ cable and connector, 125°C	60.84
BKSWH-361-21	Star Constellation™, 21' cable and connector, 125°C	70.30

Remote Flashing Led Kits

***= LED colors: A, B, C, G, R**

Model Number	Description	List
LDHF301-*-10	Hide-a-Star, In-line, directional head, undercover flashing kit, 10’ cable, 1” hole mount, 12-24V	152.10
LDHF301-*-30	Hide-a-Star, In-line, directional head, undercover flashing kit, 30’ cable, 1” hole mount, 12-24V	169.34
LDHF311-*-10	Hide-a-Star, In-line, spherical head, undercover flashing kit, 10’ cable, 1” hole mount, 12-24V	152.10
LDHF311-*-30	Hide-a-Star, In-line, spherical head, undercover flashing kit, 30’ cable, 1” hole mount, 12-24V	169.34
LDK302	Hide-a-Star, In-line, two directional head kit, undercover flashing kit, 12-24V	316.03
LDK304	Hide-a-Star, In-line, two directional head kit, undercover flashing kit, 12-24V	620.57
LDK312	Hide-a-Star, In-line, two spherical head kit, undercover flashing kit, 12-24V	316.03
LDK314	Hide-a-Star, In-line, two spherical head kit, undercover flashing kit, 12-24V	620.57

Remote Kits and Packs

Model Number	Description	List
RSK242P	Two head strobe kit, two phantom strobe tubes, cables, switch	309.95
RSK244P	Four head strobe kit, four phantom strobe tubes, cables, switch	427.57
RSK310P	Two head phantom hide-a-way strobe kit, quad flash, cables, switch	279.86
RSK966P	Six head strobe, six phantom strobe heads, cables, switch, 60 watt	520.52
RSK996P	Six head strobe, six phantom strobe heads, cables, switch, 90 watt	533.36
RP242	Two head strobe power supply, selectable flash patterns, 40 watt	184.21
RP244	Four head strobe power supply, selectable flash patterns, diagnostics, 75 watt	230.52
RP310	Two head D/Q flash strobe power supply, 24 watt	159.54
RP966	Six head selectable flash patterns, remote strobe power supply, 60 watt	283.24
RP996	Six head selectable flash patterns, remote strobe power supply, 90 watt	299.13

Remote Heads

*** = Colors: A, B, C, G, R**

Model Number	Description	List
SH3904-*	4" round strobe head	59.15
SH3920-*	Oval strobe head	59.15
SH3922-*	Aerodynamic, surface mount strobe head	70.64
SH3930-*	Par 36 round strobe head	85.18
SH3930E-*	Par 36 round strobe head, extended lens	92.27
SH3940-*	360° dummy strobe head, standard 180” cable	102.41
SH3970-*	7" round strobe head, weatherproof connector	70.64
SH4500-*	Mini rectangular strobe head	73.68
SH4501-*	Rectangular strobe head	85.18
SH4601-*	360°, 4” dummy strobe head, standard 180” cable	88.22
SH4602-*	360°, 6” dummy strobe head, standard 180” cable	93.96
ST413P	Colored phantom strobe tube (A, B, R)	43.26
ST415P*	Clear phantom flash tube, mount bracket	43.26

LED Traffic Directors

LED color: A

Model Number	Description	List
TDLIN-36-15	36”, Lineum X™ Traffic Director, 15’ of cable, 12V	562.43
TDLIN-36-30	36”, Lineum X™ Traffic Director, 30’ of cable, 12V	612.46
TDLIN-47-15	47”, Lineum X™ Traffic Director, 15’ of cable, 12V	581.02
TDLIN-47-30	47”, Lineum X™ Traffic Director, 30’ of cable, 12V	631.38
TDLIN-47-45	47”, Lineum X™ Traffic Director, 45’ of cable, 12V	706.76
TDLIN-47-60	47”, Lineum X™ Traffic Director, 60’ of cable, 12V	753.06
TDLIN24-47-30	47”, Lineum X™ Traffic Director, 30’ of cable, 24V	980.20
TD93-36-15	36”, eight light Traffic Director, 15’ cable and control unit, 12V	562.43
TD93-36-30	36” eight light Traffic Director, 30’ cable and control unit, 12V	612.46
TD93-47-15	47” eight light Traffic Director, 15’ cable and control unit, 12V	581.02
TD93-47-30	47” eight light Traffic Director, 30’ cable and control unit, 12V	631.38

TD93-47-45	47” eight light Traffic Director, 45’ cable and control unit, 12V	706.76
TD93-47-60	47” eight light Traffic Director, 60’ cable and control unit, 12V	753.06
TD93DLXT-47-15	48” length,15’ of cable, 10-16V	846.01
TD93DLXT-47-30	48” length, 30’ of cable, 10-16V	896.04
TD93DLXT-47-45	48” length, 45’ of cable, 10-16V	946.06
TD93DLXT-47-60	48” length, 60’ of cable, 10-16V	996.42
TD93DLXTARO2-48	48” length, eight LED heads, four on each side, 15’ of cable, 10-16V	1,466.24
TD93DLXTARO2-60	60” length, eight LED heads, four on each side, 15’ of cable, 10-16V	1,601.44
TD93DLXTARO2-72	72” length, eight LED heads, four on each side, 15’ of cable, 10-16V	1,736.64
TD93DLXTARO2-84	84” length, eight LED heads, four on each side, 15’ of cable, 10-16V	1,872.18
TD93DLXTARO2-96	96” length, eight LED heads, four on each side, 15’ of cable, 10-16V	2,007.38
LED Traffic Directors (Continued)		
*** = LED colors: A, B, C, G, R**		
Model Number	**Description**	**List**
TD93DLXTARO2-S	Split Traffic Director, arrows w/eight LED heads, 15’ of cable, 10-16V	1,747.80
TD93DLXTARO-48	48” length, four LED heads, 15’ of cable, 10-16V	1,184.35
TD93DLXTARO-60	60” length, four LED heads, 15’ of cable, 10-16V	1,319.55
TD93DLXTARO-72	72” length, four LED heads, 15’ of cable, 10-16V	1,455.09
TD93DLXTARO-84	84” length, four LED heads, 15’ of cable, 10-16V	1,590.29
TD93DLXTARO-96	96” length, four LED heads, 15’ of cable, 10-16V	1,725.49
TD93DLXTARO-S	Split Traffic Director, arrows w/four LED heads, 15’ of cable, 10-16V	1,353.35
SWH-271-ARO-15	15’ cable	79.43
SWH-271-ARO-30	30’ cable	138.24
SWH-271-ARO-45	45’ cable	197.05
SWH-271-ARO-60	60’ cable	256.54
TDDL15-36	36”, Starburst optics, standard 15’ cable, 10-16V	823.71
TDDL15-42	42”, Starburst optics, standard 15’ cable, 10-16V	841.96
TDDL15-42TA	42”, Starburst optics for Chevy Tahoe, standard 22’ cable	841.96
TDDL15-47	48”, Starburst optics, standard 15’ cable, 10-16V	841.96
TDDL15-47CV	48”, Starburst optics for Ford Crown Victoria, standard 15’ cable, 10-16V	841.96
DL15-30W-*	28”, combination warning and Traffic Director, 10-16V	845.00
DL15-30W-ARB	28”, combination warning and Traffic Director (Amber, Red, Blue), 10-16V	845.00
TCS-1	Stop/Slow traffic control sign	223.42
TCS-1REF	Stop/Slow traffic control sign, M.U.T.C.D. reflective tape	270.74
TCS-2	Stop/Stop traffic control sign	223.42
TCS-2REF	Stop/Stop traffic control sign, M.U.T.C.D. reflective tape	270.74
TCS-6	6’ extension pole for TCS-1 and TCS-2	90.25
ULB42-TD-**	Interior mount Star Phantom®, Traffic Director, 10-16V	1,015.01
ULB42-TD-1-**	Interior mount Star Phantom®, Traffic Director, stick only, 10-16V	789.56
ULB44-TD-**	Starburst, interior mount Star Phantom®, Traffic Director, 10-16V	1,116.41
ULB44-TD-1-**	Starburst, interior mount Star Phantom®, Traffic Director, stick only, 10-16V	891.64
ULB48-TD-**	Lineum X™ Phantom®, Traffic Director, dual color, 10-16V	1,127.57

TDC-3	Traffic director controller eight output	135.20
TD77-2	Traffic director control box	225.44
Star Phantom® LED Lightbars		
*** = LED colors: A, B, C, G, R**		
Model Number	**Description**	**List**
ULB42-**	Interior undercover, front windshield mount, cig. plug, 10-16V	789.57
ULB42-1-**	Interior undercover, rear mount, cig. plug, 10-16V	789.57
ULB42-DLP-**	Interior undercover, directional LED pursuit, hardwire, 10-16V	846.01
ULB10-**	Half Phantom™, interior, vehicle specific mounting bracket kit, cig. plug, 10-16V	383.63
ULB21-**	Split Phantom™, interior undercover, vehicles w/overhead consoles, cig. plug, 10-16V	721.63
ULB44-**	Starburst Phantom™, interior, front windshield mount, cig. plug, 10-16V	890.97
ULB44-1-**	Starburst Phantom™, interior, front windshield mount, hardwire, 10-16V	890.97
ULB44-2-**	Starburst Phantom™, interior, Impala front windshield mount, cig. plug, 10-16V	890.97
ULB44-3-**	Starburst Phantom™, interior, Impala rear mount, cig. plug, 10-16V	890.97
ULB44-DLP-**	Starburst Phantom™, interior, directional LED take down, hardwire, 10-16V	947.41
Star Phantom® LED Lightbars (Continued)		
*** = LED colors: A, B, C, G, R**		
Model Number	**Description**	**List**
ULB14-**	Starburst Half Phantom™, interior undercover, vehicle specific mounting bracket kit, cig. plug, 10-16V	417.77
ULB24-**	Starburst Split Phantom™, interior undercover, vehicles with overhead consoles, cig. plug, 10-16V	834.86
ULB24-CA-**	Starburst Split Phantom™, interior undercover, vehicles with overhead consoles, cig. plug, CA Title 13, 10-16V	834.86
ULB24-DLP-**	Starburst Split Phantom™, interior undercover, vehicles with overhead consoles, directional LED, hardwire, 10-16V	890.97
ULB18-**	Lineum X™, Half Phantom™, dual color, 10-16V	631.72
ULB28-**	Lineum X™, Split Phantom™, dual color, 10-16V	1,073.49
ULB28-CH	Dodge Charger Lineum X™, Split Phantom™, dual color, 10-16V	1,073.49
ULB28-FIS-**	Ford Interceptor Sedan Lineum X™, Split Phantom™, dual color, 10-16V	1,073.49
ULB28-FISUV-**	Ford Interceptor SUV Lineum X™, Split Phantom™, dual color, 10-16V	1,073.49
ULB34-1-FISUV	Rear window light, six Starburst heads, 30" long, for Ford Interceptor SUV, 10-16V	388.70
ULB34-1-TA	Rear window light, six Starburst heads, 30” long, for Tahoe/Suburban, 10-16V	388.70
ULB38-TD-FISUV	Rear window light, six Lineum Dual Color heads, 30" long, for Ford Interceptor SUV, 10-16V	633.75
ULB38-TD-TA	Rear window light, six Lineum Dual Color heads, 30” long, for Tahoe/Suburban, 10-16V	633.75
Star Phantom® LED Lightbar Mount Kits		
Vehicle Specific Mounting Kits for Half Phantoms™ (with ULB10, ULB14, and ULB18 - included in price)		
Model Number	**Description**	**List**
274-ULB10-CH	2006-2010 Dodge Charger, 2005-2008 Dodge Magnum	34.14
274-ULB10-CH11	2011-2016 Dodge Charger	34.14
274-ULB10-CP	2011-2016 Chevrolet Caprice	34.14
274-ULB10-CV	2006-2011 Ford Crown Victoria	34.14

274-ULB10-DU	2010-2016 Dodge Durango	34.14
274-ULB10-EX	2012-2016 Interceptor SUV, 2004-2014 Ford F150, 2006-2016 Ford Explorer, 2007-2013 Ford Expedition	34.14
274-ULB10-FI	2015-2016 Ford F150	34.14
274-ULB10-IM	2006-2013 Chevrolet Impala	34.14
274-ULB10-INT	2012-2016 Ford Interceptor Sedan	34.14
274-ULB10-RM	2009-2016 Dodge Ram	34.14
274-ULB10-TA	2007-2016 Chevrolet Tahoe, 2007-2016 Chevrolet Suburban, 2007-2016 Chevrolet Yukon	34.14
274-ULB10-U1	Universal mounting	34.14
274-ULB21-CH	2006-2010 Dodge Charger, 2005-2008 Dodge Magnum	67.94
274-ULB21-CH11	2011-2016 Dodge Charger	67.94
274-ULB21-CP	2011-2016 Chevrolet Caprice	67.94
274-ULB21-CV	2006-2011 Ford Crown Victoria	67.94
274-ULB21-DU	2010-2016 Dodge Durango	67.94
274-ULB21-EX	2012-2016 Interceptor SUV, 2004-2016 Ford F150, 2006-2016 Ford Explorer, 2007-2013 Ford Expedition	67.94
274-ULB10-FI	2015-2016 Ford F150	67.94
274-ULB21-IM	2006-2013 Chevrolet Impala	67.94
274-ULB21-INT	2012-2016 Ford Interceptor Sedan	67.94
274-ULB21-RM	2009-2016 Dodge Ram	67.94
274-ULB21-TA	2007-2016 Chevrolet Tahoe, 2007-2016 Chevrolet Suburban, 2007-2016 Chevrolet Yukon	67.94
274-ULB21-U1	Universal mounting	67.94
LED Mini Bars		
*** = Dome colors: A, B, C, G, R**		
LED colors: A, B, C, G, R		
Model Number	**Description**	**List**
9016LED	16” Starbeam™, M-Tech Plus®, 360° warning light, perm. mount, 10-30V	519.17
9016LEDM	16” Starbeam™, M-Tech Plus®, 360° warning light, mag. mount, 10-16V	552.97
9016LEDV	16” Starbeam™, M-Tech Plus®, 360° warning light, vacuum mag. mount, 10-16V	618.54
LED Mini-Bars (Continued)		
*** = Dome colors: A, B, C, G, R**		
LED colors: A, B, C, G, R		
Model Number	**Description**	**List**
9018DLED-*	16” Omega™, Lineum™, dual color, warning light, perm. mount, 10-16V	1,154.61
	upcharge per head when upgrading from 12 to 18 LEDs	15.55
9018LED-*	16" Omega™, Lineum™, dual color, warning light, perm. mount, 10-16V	846.35
	upcharge per head when upgrading from 6 to 9 LEDs	10.82
9018TBLED-*	16” Omega™, Lineum™, split color - top/bottom, perm. mount, 10-16V	884.21
	upcharge per head when upgrading from 6 to 9 LEDs	10.82
7100DLED-*	Mini-Laser®, Lineum™, dual color, perm. mount, 10-16V	1,353.35
7100LED-*	Mini-Laser®, Lineum™, single color, perm. mount, 10-16V	1,046.44
7100LED-TB-*	Mini-Laser®, Lineum™, split color - top/bottom, perm. mount, 10-16V	1,082.61
9100LED-*	Star Contour™, M-Tech Plus®, perm. mount, 10-30V	317.04
9100LEDM-*	Star Contour™, M-Tech Plus®, mag. mount, 10-16V	327.52
9100LEDV-*	Star Contour™, M-Tech Plus®, vacuum mag. mount, 10-16V	352.87

9100LED-T13-A	Star Contour™, M-Tech Plus®, California Title 13, permanent mount, (Amber only), 9-32V	338.00
9100LEDV-T13-A	Star Contour™, M-Tech Plus®, California Title 13, vacuum magnet mount, (Amber only), 9-32V	374.16
9200H8L-*	Dual ultra high intensity LEDs, perm. mount, 10-30V	295.75
9200H8LM-*	Dual ultra high intensity LEDs, mag. mount, 10-16V	317.04
9200H8LV-*	Dual ultra high intensity LEDs, vacuum mag. mount, 10-16V	359.29
9200HL-*	Dual high intensity LEDs, perm. mount, 10-30V	274.79
9200HLM-*	Dual high intensity LEDs, mag. mount, 10-16V	295.75
9200HLV-*	Dual high intensity LEDs, vacuum mag. mount, 10-16V	338.00
9202L-*	C2 LED Minibar, perm. mount, 10-30V	189.95
9202LM-*	C2 LED Minibar, mag. mount, 10-16V	219.02
9202LV-*	C2 LED Minibar, vacuum mag. mount, 10-16V	303.18
Strobe Mini Bars		
*** = Dome colors: A, B, C, G, R**		
Model Number	**Description**	**List**
9200S-*	D/Q flash, (2) 360° strobe heads, (2) V-mirrors, perm. mount, 12-24V	250.80
9200S-BOY	D/Q flash, (2) 360° strobe heads, (2) V-mirrors, perm. mount, 12-24V, amber/clear inner domes, clear outer dome	250.80
9200SM-*	D/Q flash, (2) 360° strobe heads, (2) V-mirrors, cig. plug, mag. mount, 12V	279.86
9200SM-BOY	D/Q flash, (2) 360° strobe heads, (2) V-mirrors, cig. plug, mag. mount, 12V, amber/clear inner domes, clear outer do	279.86
9200SV-*	D/Q flash, (2) 360° strobe heads, (2) V-mirrors, cig. plug, vacuum mag. mount, 12V	364.03
9200SV-BOY	D/Q flash, (2) 360° strobe heads, (2) V-mirrors, cig. plug, vacuum mag. mount, 12V, amber/clear inner domes, clear	364.03
9200H-*	(2) halogen rotators, (2) V-mirrors, perm. mount, 12V	140.95
9200HM-*	(2) halogen rotators, (2) V-mirrors, mag. mount, cig. plug, 12V	166.30
9200HV-*	(2) halogen rotators, (2) V-mirrors, vacuum mag. mount, cig. plug, 12V	253.84
LED Lightbars		
*** = LED colors: A, B, C, G, R**		
Model Number	**Description**	**List**
1400LED-AA	44”, Amber single color Phazer lightbar, long single (6) LED heads, short single (3) LED heads, Clear domes	1,687.97
1421LED-RB	44”, Red/Blue single color Phazer lightbar with starburst alleys, starburst takedown pursuits, traffic director, long sing	1,856.97
1423LED-RB	44”, Red/Blue Phazer lightbar with Traffic Director, dual-color alleys, takedown pursuits, intersection clearing lights, l	2,218,29
1421DLED-RBCA	44”, Red/Blue dual-color Phazer lightbar with scene lighting, alleys, Traffic Director, long single (6) LED heads, long	2,429.54
LED Lightbars (Continued)		
*** = LED colors: A, B, C, G, R**		
Model Number	**Description**	**List**
1521LED-RB	51”, Red/Blue single color Phazer lightbar with starbburst alleys, starburst takedown pursuits, traffic director, long sir	2,271.02
1523LED-RB	51”, Red/Blue lightbar with traffic director, dual color alleys, takedown pursuits, intersection clearing lights, long singl	2,376.82
1521DLED-RBCA	51” Red/Blue dual-color Phazer lightbar with scene lighting, alleys, traffic director, long single (6) LED heads, long du	2,535.00
1510LED-AA	51” Amber Phazer tow lightbar with Starburst worklights, Starburst stop/tail/turn lights, long single (6) LED heads, sh	2,059.77
LBC-CAN	Lightbar control can module	338.00
7232LED-*	22” Laser®, (1) M-Tech Plus® head	675.32
7460LED-*	46” Laser®, (2) M-Tech Plus® heads w/scene lighting	1,795.79

7461LED-*	46” Laser®, Police Package, (2) M-Tech Plus® heads w/scene lighting, (2) LED alleys, (2) front DLX6 take down/pursuits	2,007.04
7462LED-*	46” Laser®, Police Package, (2) M-Tech Plus® heads, (2) LED alleys, (2) LED take down/pursuits	2,059.43
7464LED-*	46” Laser®, M-Tech Plus® heads, (2) V-mirrors	1,742.73
7564LED-TOW	52” Laser®, M-Tech Plus® heads, (2) stop/tail/turns, (2) worklights	1,953.98
7565LED-TOW	52” Laser®, (2) M-Tech Plus® heads w/scene lighting, (2) stop/tail/turns, (2) worklights	2,110.47
2360LED-*	36" Razor®, (2) M-Tech Plus® heads w/scene lighting	1,214.77
2460LED-*	46" Razor®, (2) M-Tech Plus® heads w/scene lighting, (2) V-mirrors	1,267.50
2461LED-*	46" Razor® , (2) M-Tech Plus® heads w/scene lighting, (2) front DLX6 LED take down/pursuits, (2) LED alleys	1,584.54
2565LED-TOW	56" Razor®, (2) M-Tech Plus® heads w/rear scene lighting, (2) LED worklights, (2) Red Batwing stop/tail/turns	1,901.25
2364LED-*	36” Razor®, (2) M-Tech Plus® heads	1,108.98
2462LED-*	46” Razor®, (2) M-Tech Plus® heads, (2) take down/pursuits, (2) LED alleys	1,478.75
2463LED-*	46” Razor®, (2) M-Tech Plus® heads, (2) V-mirrors, (2) LED take down/alleys	1,162.04
2464LED-*	46” Razor®, (2) M-Tech Plus® heads, (2) V-mirrors	1,108.98
2464LED-TOW	46” Razor®, (2) worklights, (2) Red Batwing stop/tail/turn LEDs, Clear domes	1,436.50
5364LED-*	36” Sabre®, (2) M-Tech Plus® heads	1,056.25
5462LED-*	46” Sabre®, (2) M-Tech Plus® heads, (4) take down/pursuits, (2) alleys, LED intersection clearing, (2) V-mirrors	1,531.48
5464LED-*	46” Sabre®, (2) M-Tech Plus® heads, (2) V-mirrors	1,124.19
5564LED-*	56” Sabre®, (2) M-Tech Plus® heads, (2) V-mirrors	1,319.89
6032LED-*	20" Aerostar®, (2) M-Tech Plus® heads	541.48
6032LEDM-*	20" Aerostar®, (2) M-Tech Plus® heads, mag. mount	582.37
6464LED-*	48" Aerostar®, (2) M-Tech Plus® heads	1,127.57
6564LED-*	56" Aerostar®, (2) M-Tech Plus® heads	1,240.80
9404H8L-*	48” Starbar®, (4) Halo® eight LEDs, (2) diamond mirrors, (2) V-mirrors	938.29
9404HL-*	48” Starbar®, (4) Halo® four LEDs, (2) diamond mirrors, (2) V-mirrors	882.52
Strobe Lightbars		
Dome colors: A, B, C, G, R		
Model Number	**Description**	**List**
2300SL	36" Razor®, (4) 7” linear strobes, (4) 4.5” linear strobes	1,151.90
2400SL	46" Razor®, (4) 7” linear strobes, (6) 4.5” linear strobes	1,841.42
2420SL	46" Razor®, (4) 7” linear strobes, (4) 4.5” linear strobes, (2) alleys, (2) front take down/pursuits, (2) rear flashers	1,828.58
2500SL	56" Razor®, (4) 7” linear strobes, (8) 4.5” linear strobes	2,089.52
5300S	36" Sabre®, (2) 360° remote strobe heads, (1) two head strobe pack, (2) large V-mirrors	843.31
5400S	46" Sabre®, (4) 360° remote strobe heads, (2) two head strobe pack, (3) medium double V-mirrors	1,243.50
5401S	46" Sabre®, (4) 360° remote strobe heads, (2) two head strobe pack, (3) medium double V-mirrors, Amber lower LED directional arrow assembly	1,657.89
5510S	56" Sabre®, (4) 360° remote strobe heads, (2) double V-mirrors, (2) rear directional halogen flood lights, (2) two head strobe packs, (2) lower stop/tail/turns	1,442.25
5511S	56" Sabre®, (4) 360° remote strobe heads, (2) double V-mirrors, (2) rear directional halogen flood lights, (2) two head strobe packs, (2) lower stop/tail/turns	1,856.63
5610S	66" Sabre®, (4) 360° remote strobe heads, (1) halogen rotator, (2) double V-mirrors, (2) small V-mirrors, (2) rear directional halogen flood lights, (2) lower stop/tail/turns	1,513.56
Strobe Lightbars (Continued)		

Dome colors: A, B, C, G, R		
Model Number	**Description**	**List**
5300SL	36" Sabre®, (4) 7” linear strobes, (4) 4.5” linear strobes, (2) four head strobe packs	1,634.23
5510SL	46" Sabre®, (4) 7” linear strobes, (4) 4.5” linear strobes, (2) four head strobe packs, (2) directional halogen floor lights, (2) lower stop/tail/turn lights	1,922.88
5610SL	56" Sabre®, (4) 7” linear strobes, (4) 4.5” linear strobes, (2) four head strobe packs, (1) halogen rotator, (2) small V-mirrors, (2) rear directional halogen flood lights, (2) lower stop/tail/turn lights	2,039.15
8300S	36" Star Interceptor®, (2) 360° remote strobe heads, (1) two head strobe pack, (2) medium V-mirrors	675.32
8400S	46" Star Interceptor®, (4) 360° remote strobe heads, (2) two head strobe packs, (2) double V-mirrors	1,025.49
8401S	46" Star Interceptor®, (4) 360° remote strobe heads, (2) two head strobe packs, (3) double V-mirrors, lower directional arrow assembly	1,387.83
8510S	56" Star Interceptor®, (4) 360° remote strobe heads, (2) double V-mirrors, rear directional halogen flood lights, (2) two head strobe packs, (2) lower stop/tail/turn lights	1,205.65
8610S	66" Star Interceptor®, (4) 360° remote strobe heads, (1) halogen rotator, (2) double V-mirrors, (2) medium V-mirrors, (2) directional halogen flood lights, (2) two head strobe packs, (2) lower stop/tail/turns	1,276.63
8300SL	36" Star Interceptor®, (4) 7” linear strobes, (4) 4.5” linear strobes, (2) four head strobe packs	1,385.80
8610SL	66" Star Interceptor®, (4) 7” linear strobes, (4) 4.5” linear strobes, (1) halogen rotator, (2) medium V-mirrors, (2) rear directional halogen flood lights, (2) four head strobe packs, (2) lower stop/tail/turns	1,802.55
6020S	20" Aerostar®, (2) 360° remote strobe heads, (1) wall mirror/strobe pack, (1) 12” dome section	367.07
6222S	24" Aerostar®, (2) 360° remote strobe heads, (1) two head strobe pack, (1) 16” dome section, (1) medium double V-mirror	400.87
6224SL	24" Aerostar®, (4) 4.5” linear strobe heads, (1) four head power pack, (1) 16” dome section	865.96
6444S	44" Aerostar®, (4) 360° remote strobe heads, (2) medium double V-mirrors, (2) two head strobe packs, (2) 16” dome sections	765.23
9300S	36" Starbar®, (2) 360° remote strobe packs, (2) V-mirrors, (2) wall mirrors, (1) two head strobe pack	480.97
9400S	48" Starbar®, (2) 360° remote strobe packs, (2) V-mirrors, (2) wall mirrors, (1) two head strobe pack	580.35
9404S	48" Starbar®, (4) 360° remote strobe packs, (3) double V-mirrors, (1) two head strobe pack	698.65
9411S	48” Starbar®, (2) 360° remote strobe packs, (2) V-mirrors, (2) wall mirrors, (2) stop/tail/turns, (3) ID marker lights, (2) rear directional halogen flood lights, (1) two head strobe pack	710.48
9500S	58" Starbar®, (6) 360° remote strobe heads, (2) double V-mirrors, (2) V-mirrors	1,082.61
9512S	58" Starbar®, (4) 360° remote strobe heads, (2) double V-mirrors, (2) stop/tail/turns, (3) ID marker lights, (2) rear directional halogen flood lights, (2) two head strobe pack	914.63
Halogen Lightbars		
Dome colors: A, B, C, G, R		
Model Number	**Description**	**List**
5300H	36" Sabre®, (2) halogen rotators, (2) fast halogen rotators, (2) Z-mirrors	725.01
5400H	46" Sabre®, (2) halogen rotators, (2) fast halogen rotators, (2) medium V-mirrors, (2) Z-mirrors	795.65
5401H	46" Sabre®, (2) halogen rotators, (2) fast halogen rotators, (2) medium V-mirrors, (2) Z-mirrors, lower LED directional arrow assembly	1,210.38
5511H	56" Sabre®, (2) halogen rotators, (2) fast halogen rotators, (2) Z-mirrors, (2) rear directional halogen flood lights, (2) lower stop/tail/turns, lower LED directional arrow assembly	1,581.84
5611H	66" Sabre®, (2) halogen rotators, (2) fast halogen rotators, (2) Z-mirrors, (2) small V-mirrors, (2) rear directional halogen flood lights, (2) stop/tail/turns, lower LED directional arrow assembly	1,655.52
8300H	36” Interceptor®, (2) halogen rotators, (2) fast halogen rotators, (2) Z-mirrors	583.05
8400H	46" Interceptor®, (2) halogen rotators, (2) fast halogen rotators, (2) double V-mirrors, (2) Z-mirrors	654.03

8401H	46" Interceptor®, (2) halogen rotators, (2) fast halogen rotators, (1) double V-mirror, (2) Z-mirrors, lower directional arrow assembly w/colored lenses	1,068.08
8402HSL	46" Interceptor®, (2) halogen rotators, (2) fast halogen rotators, (2) large V-mirrors, (2) medium V-mirrors, (4) 4.5" linear strobe heads, (1) four head strobe pack	1,105.94
8510H	56" Interceptor®, (2) halogen rotators, (2) fast halogen rotators, (2) Z-mirrors, (2) wall mirrors, (2) rear directional flood lights, (2) lower stop/tail/turns, lower directional arrow assembly w/colored lenses	935.92
8521H	56" Interceptor®, (2) halogen rotators, (4) fast halogen rotators, (2) Z-mirrors, (2) wall mirrors, (2) rear directional flood lights, (2) lower stop/tail/turns, lower directional arrow assembly w/colored lenses	1,489.57
8610H	66" Interceptor®, (3) halogen rotators, (3) fast halogen rotators, (2) Z-mirrors, (2) medium V-mirrors, (2) lower stop/tail/turns, (2) rear directional flood lights	1,051.52

Halogen Lightbars

Dome colors: A, B, C, G, R

Model Number	Description	List
6020H	20" Aerostar®, (2) halogen rotators, (1) wall mirror, (1) 12" dome section	304.20
6020HM	20" Aerostar®, (2) halogen rotators, (1) wall mirror, (1) 12" dome section, mag. mount, cig. plug	344.76
6222H	24" Aerostar®, (2) halogen rotators, (1) double V-mirror, (1) 16" dome section	382.95
6304H	40" Aerostar®, (4) halogen rotators, (2) wall mirrors, (2) 12" dome section	670.93
6414H	44" Aerostar®, (4) halogen rotators, (2) front flashers, (2) rear flashers, (2) wall mirrors, (2) 16" dome sections	883.53
6420H	48" Aerostar®, (4) halogen rotators, (2) medium double V-mirrors, (2) 16" dome sections	736.50
6423H	48" Aerostar®, (4) halogen rotators, (2) front flashers, (2) rear flashers, (2) alley lights, (3) 12" dome sections	1,082.27
6430H	48" Aerostar®, (5) halogen rotators, (2) V-mirrors, (2) wall mirrors, (3) 12" dome sections	857.16
6444H	44" Aerostar®, (4) halogen rotators, (2) double V-mirrors, (1) 16" dome section	629.69
6448H	48" Aerostar®, (4) halogen rotators, (2) wall mirrors, (2) front flashers, (2) rear flashers, (2) 16" dome sections	986.28
6500H	52" Aerostar®, (5) halogen rotators, (2) V-mirrors, (2) wall mirrors, (3) 12" dome sections	839.59
6500HSL	52" Aerostar®, (3) halogen rotators, (4) 4.5" linear strobe heads, (1) four head strobe pack, (2) V-mirrors	1,588.60
6506H	52" Aerostar®, (2) halogen rotators, (2) V-mirrors, (2) stop/tail/turn lights, (3) D.O.T. marker lights, (2) 16" end dome sections	918.34
6511H	56" Aerostar®, (4) halogen rotators, (2) rear worklights, (2) front flashers, (2) stop/tail/turn lights, (3) D.O.T. market lights, (2) 16" end dome sections	1,132.30
6530H	56" Aerostar®, (5) halogen rotators, (2) V-mirrors, (2) double V-mirrors, (2) 16" dome sections, (1) 12" dome section	777.40
6531H	56" Aerostar®, (5) halogen rotators, (2) front flashers, (2) rear worklights, (2) V-mirrors, (2) stop/tail/turn lights, (2) 16" dome sections, (1) 12" dome section	1,166.10
6550H	52" Aerostar®, (2) halogen rotators, (2) double V-mirror, (2) 16" dome section	744.95
6556H	56" Aerostar®, (4) halogen rotators, (1) wall mirror, (2) front flashers, (2) stop/tail/turn lights, (2) 16" dome sections, (1) 12" dome section	1,079.57
6603H	64" Aerostar®, (3) halogen rotators, (4) V-mirrors, (6) wall mirror arrays, (3) 16" dome sections	865.95
6606H	64" Aerostar®, (6) halogen rotators, (3) double V-mirrors, (3) 16" dome sections	996.08
9300H	36" Starbar®, (2) Starbeam halogen rotators, (2) V-mirrors, (2) wall mirrors	478.94
9400H	48" Starbar®, (2) Starbeam halogen rotators, (2) V-mirrors, (2) wall mirrors	532.35
9404H	48" Starbar®, (4) Starbeam halogen rotators, (2) V-mirrors, (2) large wall mirrors	561.76
9411H	48" Starbar®, (2) Starbeam halogen rotators, (2) V-mirrors, (2) wall mirrors, (2) stop/tail/turn lights, (3) ID marker lights, (2) rear directional halogen flood lights	633.75
9500H	58" Starbar®, (6) Starbeam halogen rotators, (2) V-mirrors, (2) wall mirrors	897.05
9511H	58" Starbar®, (2) Starbeam halogen rotators, (2) V-mirrors, (2) wall mirrors, (2) stop/tail/turn lights, (3) ID marker lights, (2) rear directional halogen flood lights	845.00
9512H	58" Starbar®, (4) Starbeam halogen rotators, (2) V-mirrors, (2) wall mirrors, (2) stop/tail/turn lights, (3) ID marker lights, (2) rear directional halogen flood lights	878.80
9512HS	58" Starbar®, (2) halogen rotators, (2) 360° remote strobe heads, (2) double V-mirrors, (2) stop/tail/turn lights, (3) ID marker lights, (2) rear directional halogen flood lights, (1) two head strobe pack	1,014.00

Lightbar Mount Kits

Model Number	Description	List
920-35	Ford E-Series (van), Jeep Cherokee (‘97 - ‘07)	24.00
920-35CH	Dodge Charger (‘08 -’15)	24.00
920-35CTB	GMC Envoy (‘02 - ‘05)	24.00
920-35CVLP	Ford Crown Victoria (‘92 - ‘11)	24.00
920-35D	Dodge Avenger, Dodge Dart (‘08 - ‘14)	24.00
920-35D1	Ford Explorer (‘03 - ‘15)	24.00
920-35F	Dodge Dakota, Toyota Tundra, Toyota Hilux, Toyota Tacoma	24.00
920-35FX1	4.6” Flexible bracket	24.00
920-35FX2	6.2” Flexible bracket	24.00
920-35FX3	8.4” Flexible bracket	42.25

Lightbar Mount Kits (Continued)

Model Number	Description	List
920-35F1	Ford F-Series (150), (‘07 - ‘15)	24.00
920-35F2	Ford F-Series (250, 350, 450, 550), (‘07 - ‘15)	24.00
920-35F3	Ford Edge, Ford Escape, Ford Taurus Interceptor (sedan), (‘11 - ‘13)	24.00
920-35F5	Ford Interceptor (Explorer), (‘12 - ‘15)	24.00
920-35F6	Ford E-450 (‘03 - ‘09)	24.00
920-35F9	Ford F-Series (250, 350, 450), (‘03 - ‘15)	24.00
920-35FT	Ford Expedition (‘03 - ‘15)	24.00
920-35GM	Dodge Dakota (Reg. Ext. Crew), Jeep Grand Cherokee, Jeep Liberty, Pontiac Grand Prix	24.00
920-35GM5	Chevrolet Suburban, Chevrolet Tahoe (‘07 - ‘14)	24.00
920-35GM6	Chevrolet Colorado, GMC Canyon (‘04 - ‘12)	24.00
920-35GM7	Chevrolet Caprice (‘11 - ‘15)	24.00
920-35I6	Chevrolet Impala (‘06 - ‘13)	24.00
920-35IZ	Isuzu Delivery Truck Chassis (‘00 - ‘04)	24.00
920-35M1	Dodge Charger (‘05-’07),	24.00
920-35RM2	Dodge Ram Pickup Reg. (‘03-’07)	24.00
920-35RM3	Dodge Ram Pickup Crew 1500, 2500, 3500 (‘08-’15)	24.00
920-35RM5	Dodge Ram Pickup Crew (‘03-’07)	24.00
920-35-S105	Chevrolet - Avalanche, C/K Pickup (1500, 2500, 3500), Silverado/Sierra, Trailblazer, Dodge Durango, GMC Trucks	24.00

Star Alarms® Back-Up Alarms

Model Number	Description	List
66-087	87 db, reverse speaker, compact heavy duty plastic housing, 12-36V	45.29
66-097	97 db, reverse speaker, compact heavy duty plastic housing, 12-36V	45.29
66-097-12	97 db, reverse speaker, compact heavy duty plastic housing, 12V only	45.29
66-102	102 db, reverse speaker, compact heavy duty plastic housing, 12-36V	45.29
66-107-12	107 db, reverse speaker, compact heavy duty plastic housing, 12V only	45.29
66-107-24	107 db, reverse speaker, compact heavy duty plastic housing, 24V only	45.29
66-097DT	97 db, reverse speaker, dual tone, compact heavy duty plastic housing, 12-36V	45.29
66-102DT	102 db, reverse speaker, dual tone, compact heavy duty plastic housing, 12V only	45.29
66-707A	77-97 db, reverse speaker, auto adjust, compact heavy duty plastic housing, 12-24V	49.69

66-802A	82-102 db, reverse speaker, auto adjust, compact heavy duty plastic housing, 12-24V	49.69
66-807A	87-107 db, reverse speaker, auto adjust, compact heavy duty plastic housing, 12V only	49.69
66-807A-24	87-107 db, reverse speaker, auto adjust, compact heavy duty plastic housing, 24V only	49.69
66-802S	87 or 102 db, reverse speaker, selectable, compact heavy duty plastic housing, 12-36V	49.69
66-907S	97 or 107 db, reverse speaker, selectable, compact heavy duty plastic housing, 12V only	49.69
66-097DF	97 db, reverse speaker, dual function, compact heavy duty plastic housing, 12-36V	59.15
66L-087	87 db, reverse speaker, attached lugs, compact heavy duty plastic housing, 12-36V	45.29
66L-097	97 db, reverse speaker, attached lugs, compact heavy duty plastic housing, 12-36V	45.29
66L-097-12	97 db, reverse speaker, attached lugs, compact heavy duty plastic housing, 12V only	45.29
66L-102	102 db, reverse speaker, attached lugs, compact heavy duty plastic housing, 12-36V	45.29
66L-107-12	107 db, reverse speaker, attached lugs, compact heavy duty plastic housing, 12V only	45.29
66L-107-24	107 db, reverse speaker, attached lugs, compact heavy duty plastic housing, 24V only	51.71
66L-097DT	97 db, reverse speaker, attached lugs, dual tone, compact heavy duty plastic housing, 12-36V	46.31
66L-102DT	102 db, reverse speaker, attached lugs, dual tone, compact heavy duty plastic housing, 12V only	46.31
66L-707A	77-97 db, reverse speaker, attached lugs, auto adjust, compact heavy duty plastic housing, 12-24V	49.69
66L-802A	82-102 db, reverse speaker, attached lugs, auto adjust, compact heavy duty plastic housing, 12-24V	49.69
66L-807A	87-107 db, reverse speaker, attached lugs, auto adjust, compact heavy duty plastic housing, 12V only	49.69
Star Alarms® Back-Up Alarms (continued)		
Model Number	**Description**	**List**
66-087SS	87 db, reverse speaker, Star Spectrum™, multi frequency tone, compact heavy duty plastic housing, 12-36V	79.09
66-092SS	92 db, reverse speaker, Star Spectrum™, multi frequency tone, compact heavy duty plastic housing, 12-36V	79.09
66-097SS	97 db, reverse speaker, Star Spectrum™, multi frequency tone, compact heavy duty plastic housing, 12-36V	79.09
66-087SSNS	87 db, reverse speaker, Star Spectrum™, night silent spectrum tone, compact heavy duty plastic housing, 12-36V	79.09
66-097SSNS	97 db, reverse speaker, Star Spectrum™, night silent, spectrum tone, compact heavy duty plastic housing, 12-36V	79.09
66-087NS	87 db, reverse speaker, Star Spectrum™, night silent, compact heavy duty plastic housing, 12-36V	79.09
66-097NS	97 db, reverse speaker, Star Spectrum™, night silent, compact heavy duty plastic housing, 12-36V	79.09
66-102NS	102 db, reverse speaker, Star Spectrum™, night silent, compact heavy duty plastic housing, 12-36V	79.09
66L-097SS	97 db, reverse speaker, Star Spectrum™, lugs only, night silent, compact heavy duty plastic housing, 12-36V	79.09
68-112	112 db, reverse speaker, wire leads, compact heavy duty nylon filled housing, 12-24V	89.23
68C-112	112 db, reverse speaker, 12” wire cable, compact heavy duty nylon filled housing, 12-24V	91.26
68L-112	112 db, reverse speaker, lugs only, compact heavy duty nylon filled housing, 12-24V	91.26
61-107-12	107 db, compact cast aluminum, 12V only	80.11
61-112	112 db, compact cast aluminum, 12V only	91.60
64-087	87 db, attached wire leads, compact heavy duty plastic housing, 12-36V	30.42
64-097	97 db, attached wire leads, compact heavy duty plastic housing, 12-36V	33.12
64-097-12	97 db, attached wire leads, compact heavy duty plastic housing, 12V only	33.12

64-102	102 db, attached wire leads, compact heavy duty plastic housing, 12-36V	33.12
64-107-12	107 db, attached wire leads, compact heavy duty plastic housing, 12V only	33.12
64-107-24	107 db, attached wire leads, compact heavy duty plastic housing, 24V only	33.12
64G-087	87 db, wire lugs and self grounding strap, compact heavy duty plastic housing, 12-36V	30.42
64G-097	97 db, wire lugs and self grounding strap, compact heavy duty plastic housing, 12-36V	34.14
64G-102	102 db, wire lugs and self grounding strap, compact heavy duty plastic housing, 12-36V	34.14
64G-107-12	107 db, wire lugs and self grounding strap, compact heavy duty plastic housing, 12V only	34.14
63-087	87 db, 4” round w/grommet, attached wire leads, compact heavy duty plastic housing, 12-36V	38.19
63-097	97 db, 4” round w/grommet, attached wire leads, compact heavy duty plastic housing, 12-36V	38.19
63-097-12	97 db, 4” round w/grommet, attached wire leads, compact heavy duty plastic housing, 12V only	38.19
63-102	102 db, 4” round w/grommet, attached wire leads, compact heavy duty plastic housing, 12-36V	38.19
63-107-12	107 db, 4” round w/grommet, attached wire leads, compact heavy duty plastic housing, 12V only	38.19
63-107-24	107 db, 4” round w/grommet, attached wire leads, compact heavy duty plastic housing, 24V only	38.19
63-097DT	97 db, dual tone, compact heavy duty plastic housing, 12-36V	40.90
63-102DT	102 db, dual tone, compact heavy duty plastic housing, 12-36V	40.90
60-087	87 db, single tone, compact cast aluminum, 12-36V	40.22
60-097	97 db, single tone, compact cast aluminum, 12-36V	40.90
60-102	102 db, single tone, compact cast aluminum, 12-36V	40.90
60-107-12	107 db, single tone, compact cast aluminum, 12V only	40.90
60-107-24	107 db, single tone, compact cast aluminum, 24V only	42.59
60-097DT	97 db, dual tone, compact cast aluminum, 12-36V	54.42
60-102DT	102 db, dual tone, compact cast aluminum, 12-36V	56.45
60-707A	77-97 db, auto adjust, compact heavy duty plastic housing, 12-24V	66.92
60-802A	82-102 db, auto adjust, compact heavy duty plastic housing, 12-24V	71.66
60-807A	87-107 db, auto adjust, compact heavy duty plastic housing, 12V only	71.66
BB6-097-10	97 db, bulk pack - 10 pieces, self-grounding strap	252.82
BB6-097-30	97 db, bulk pack - 30 pieces, dividers, self-grounding strap	710.81
Star Alarms® Back-Up Alarms (continued)		
Model Number	**Description**	**List**
DK64-087	87 db, wall mount display for 64-087	173.06
DK64-097	87 db, wall mount display for 64-097	186.24
DK64-097-12	87 db, wall mount display for 64-097-12	186.24
DK64-102	87 db, wall mount display for 64-102	186.24
DK64-107-12	87 db, wall mount display for 64-107-12	186.24
DK64G-087	87 db, wall mount display for 64G-087	173.39
DK64G-097	87 db, wall mount display for 64G-097	190.97
DK64G-097-12	87 db, wall mount display for 64G-097-12	190.97
DK64G-102	87 db, wall mount display for 64G-102	190.97
DK64G-107-12	87 db, wall mount display for 64G-107-12	190.97

DKC64-087	87 db, counter display for 64-087	173.06
DKC64-097	87 db, counter display for 64-097	186.24
DKC64-097-12	87 db, counter display for 64-097-12	186.24
DKC64-102	87 db, counter display for 64-102	186.24
DKC64-107-12	87 db, counter display for 64-107-12	186.24
DKC64G-087	87 db, counter display for 64G-087	173.39
DKC64G-097	87 db, counter display for 64G-097	190.97
DKC64G-097-12	87 db, counter display for 64G-097-12	190.97
DKC64G-102	87 db, counter display for 64G-102	190.97
DKC64G-107-12	87 db, counter display for 64G-107-12	190.97
Switch Panels and Switch Boxes		
Model Number	**Description**	**List**
SB4020	(1) 40 amp switch, (5) 20 amp switches, 2’ wire harness	169.00
SB4020-15	(1) 40 amp switch, (5) 20 amp switches, 15’ wire harness	202.80
SB4020T	(1) 40 amp switch, (5) 20 amp switches, nine position terminal block	178.13
SB4040	(4) 20 amp switch, (1) three mode 40 amps max, progressive slide switch, 2’ wire harness, adjustable jumper	190.63
SB4040-15	(4) 20 amp switch, (1) three mode 40 amps max, progressive slide switch, 15’ wire harness	227.81
SB4425T	(1) on/off master power switch, (4) 40 amp switches, (5) 20 amp switches, twelve position terminal block	336.98
SB1515	Enclosed switch box, (4) 20 amp switches	72.33
SP1515	Switch panel, (4) 20 amp switches	68.61
SB3015	Enclosed switch box, (1) 30 amp switch, (3) 20 amp switches	90.25
SP3015	Switch panel, (1) 30 amp switch, (3) 20 amp switches	86.87
SP3860-1	On/Off	27.72
SP3860-2	On/Off, On/Off	35.49
SP3860-2H	On/Off, High/Low	35.49
SP3860-2MH	On/Off, Momentary	35.49
SP3860-3	On/Off, On/Off, On/Off	43.60
SP3860-3H	On/Off, High/Low, On/Off	67.60
SP3860-4	On/Off, On/Off, On/Off, On/Off	84.50
SP3860-4H	On/Off, High/Low, On/Off, On/Off	84.50
SP3860-5	On/Off, On/Off, On/Off, On/Off, On/Off	92.95
SW-11	Replacement, 30 amp on/off lighted rocker switch for SB3015	20.62
SW-20	Replacement, rocker switch for FM696 flasher box	11.49
SW-40	Replacement, 20 amp on/off lighted rocker switch for SP and SB series switch boxes and panels	12.84
Starflash™ Flasher Modules and Heads		
Model Number	**Description**	**List**
FM3662	Two or four halogen flasher, alternating pattern, solid state, 2.4 fps, 12V	70.98
FM3666	Alternating mechanical headlight flasher, 12V	53.07
FM3667	back-up/brake light flasher, solid state, 1.2 fps, 12V	91.94
FM3669C	1-12 flasher module, custom pattern, daytime running light compatibility, 0.8 to 3.6 fps, 12V	93.96

FM6901	Alternating headlight flasher, 1.9 fps, 12V	63.21
FM6902	Alternating headlight flasher, 2.9 fps, 12V	68.95
FM6903	Simultaneous headlight flasher, 2.9 fps, 12V	72.33
FM6904	Triple flashes left, then right, then simultaneous, 2.9 fps	68.95
FM6905	Headlight flasher module exclusive to Ford Crown Victoria Police Packages, 0.8 to 3.6 fps, 10-16V	134.52
FM6906	Headlight flasher module exclusive to Chevrolet Impala Police Packages, 3.0 fps, 12V	134.52
FM6907	Headlight flasher module exclusive to Caprice Police Packages 2011 and newer, 3.0 fps, 12V	134.52
FM6908	Isolated high beam headlight flasher for Chrysler vehicles, 0.8 to 3.6 fps, 12V	134.52
FM6909	Headlight flasher module exclusive to Chevy Tahoe Police Packages 2007 and newer, 9-16V	134.52
Accessories		
Model Number	**Description**	**List**
BB274-BEACONMMB	1" NPT beacon mirror bracket west coast style, for 1" NPT threaded beacons	30.42
BB274-7100MMB	West coast style mirror bracket for the 7100 lightbar	16.90
BB274-MINIBAR-RSR	Universal Minibar bracket for 9100, 9200, 9016, 9018 series Minibars	17.58
BB274-DLXTHU-LPB	DLXTHU/DLXT license plate bracket mounts 2 units	42.25
BB274-343K	Adjustable beacon bracket	150.41
BBK-FDCH	Steering Wheel interface circuit for Ford Interceptor SUV, Sedan, and Dodge Charger	111.87
BB-BEACON	Beacon Buddy™, beacon base assembly	33.80
BB-DS-F150	Beacon Buddy™, driverside short post, for F150 pick-up truck	185.90
BB-DSB-F150	Beacon Buddy™, rear, driver side, short, beacon	258.57
BB-DSM-F150	Beacon Buddy™, rear, driver side, short, mini-bar	278.85
BB-DT-F150	Beacon Buddy™, driverside tall post, for F150 pick-up truck	232.54
BB-DTB-F150	Beacon Buddy™, driverside tall post, with beacon plate for F150 pick-up truck	295.75
BB-DTM-F150	Beacon Buddy™, driver side, tall post, mini-bar	317.04
BB-MINIBAR	Beacon Buddy™, mini-bar base assembly	87.88
BB-PS-F150	Beacon Buddy™, rear, passenger side, short post	185.90
BB-PSB-F150	Beacon Buddy™, rear, passenger, short, beacon	258.57
BB-PSM-F150	Beacon Buddy™, rear passenger, short, mini-bar	278.85
BB-PT-F150	Beacon Buddy™, passenger side, tall post	232.54
BB-PTB-F150	Beacon Buddy™, passenger side, tall post, beacon	295.75
BB-PTM-F150	Beacon Buddy™, passenger side, tall post, mini-bar	317.04
274-SL	Self levelling bracket	93.96
274-SL1	Self levelling bracket for mini-bars	117.29
SR10	Horizontal mount, three unit organizer	52.39
SR12	Horizontal mount, four unit organizer	56.11
SR7	Vertical mount, two unit organizer	40.22
SR9	Vertical mount, three unit organizer	44.62
121BX	Heavy duty enclosed mounting box for one 6” oval light head	114.24
122BX	Heavy duty enclosed mounting box for two 6” oval light heads	147.03
123BX	Heavy duty enclosed mounting box for three 6” oval light heads	197.73
131BX	Light duty enclosed mounting box for one 6” oval light head	46.31
132BX	Light duty enclosed mounting box for two 6” oval light heads	68.95
133BX	Light duty enclosed mounting box for three 6” oval light heads	105.79

141BX	Light duty enclosed mounting box for one 4” round light head	46.31
142BX	Light duty enclosed mounting box for two 4” round light heads	68.95
143BX	Light duty enclosed mounting box for three 4” round light heads	105.79
63-642	Any directional back-up alarm switch	52.39
63-643	Uni-directional back-up alarm switch	44.27

Accessories (Worklights)

Model Number	Description	List
510	Clear, 4411 sealed beam, 3000cp	55.77
511	Clear, 4411 sealed beam, clear polycarbonate lens	55.09
510-1	Clear, toggle switch	39.21
510-1M	Clear, mag. mount, cig. plug, toggle switch	52.39
510-4509	Clear, 4509 high intensity sealed beam, 3000cp	58.47
510-M	Clear, mag. mount, cig. plug	47.66
510-TK	Two stop/tail light tow kit, mag. mount, 20’ cord	191.98
511-1M	Clear, mag. mount, cig. plug, toggle switch, lens shield	63.21

Accessories (Stainless Steel Guards and Mounting)

Model Number	Description	List
274-40C	Tall guard for 240 series	36.84
274-40S	Short guard for 240 series	46.31
274-55TC	Tall guard for 255TC series	44.62
274-55TS	Short guard for 255TS series	44.62
274-SL255	Self levelling bracket for 255 series	99.37
274-MMB	Mirror mount bracket, ½” pipe mount	35.15
274-MMBT	½" NPT truck mirror mount bracket	35.15
274-MMB1S	1" NPT truck mirror mount bracket	35.15
274-MMBS	½" NPT truck mirror mount bracket	35.15

Strobe Tube and Bulb Guide

Model Number	Description	List
129	5 pin helical strobe tube	25.35
129-DH	Flash tube, double flash	40.56
129-R	Squat flash tube for 241 Series and 845S	28.73
129-Z	Strobe tube	21.97
LST129-4	4.5” linear strobe tube	26.70
LST129-7	7” and 9” linear strobe head	43.26
ST3901-*	Strobe head, weatherproof connector (* = A, B, C, R)	54.42
ST3901-12	Replacement strobe	54.42
ST3901-7	Strobe tube assembly head for mini-bars and lightbars	54.42
ST413P*	Amber phantom strobe tube, amp connector, (* = A, R, B)	43.26
ST413P*-W	Amber phantom strobe tube, weatherproof connector, (* = A, R, B)	43.26
ST415PC	Clear hide-a-way strobe head, amp connector	43.26
ST415PC-W	Clear hide-a-way strobe head, weatherproof connector	43.26
2073-1142	18.4 watt bulb, incandescent, double contact	5.75

2073-1157	Stop/tail/tun bulb	3.04
2073-1195	Single contact bulb, bayonet base, 35 watt, 12V	4.06
2073-4411	Screw terminal lamp GE 300, candle power screw terminal, 12.8V	14.20
2073-4505	24V bulb	46.31
2073-4509	Lamp GE product code	39.88
2073-59013	20 watt, halogen spot for Starbar® and alley lights	28.73
2073-7400	Clear, sealed beam fro 400 and 540 series lights, 12V	14.20
2073-795X	50 watt halogen bulb, single contact, 12V	14.53
2073-797	50 watt, bi-pin bulb for 1169H	9.13
2073-94	13.3 watt incandescent, double contact bulb for Sabre® and Interceptor® Traffic Director	10.14
2073-FTEFG	35 watt bulb for Razor® alley light, 12V	28.73
2073-H20-W24	Halogen lamp, 18 watt, double contact, 24V	14.87
2073-H27	Double contact bulb fits Interceptor® lower level and alley, Aerostar® new style alley and Hotshot	14.53
2073-H27-24V	27 watt, halogen lamp, 24V	14.53
2073-H3-1 (12V)	Halogen bulb for 505HM and grille/deck lights, 55 watt, 12V	8.11
2073-H3-1 (24V)	Halogen bulb for 505HM, 24V	15.89
2073-H50S	Special 50 watt short halogen bulb for Sabre® rotator	19.27
2073-H50-W24	Single contact halogen bulb, 50 watt, fits 24V rotators, 24V	14.87
Sirens		
Model Number	**Description**	**List**
LCS600	Hand held multi-function microphone, 100 watt	297.77
LCS652-013	Four mode economy siren, two auxiliary power switches, without P.A., 100 watt	201.11
LCS653-013	Four mode undercover siren, two auxiliary power switches, without P.A., 100 watt	282.23
LCS653-1-013	Three mode undercover siren, one auxiliary power switches, without P.A., 100 watt	282.23
LCS770	Six mode siren, P.A., backlit, seven switch functions, 100/200 watt	643.89
LCS771	Light control siren, six rocker switches, one slide switch, with detachable microphone, 100/200 watt, 10-16V	526.26
LCS771-LM	Light control siren, six rocker switches, one slide switch, no microphone, 100/200 watt, 10-16V	507.00
LCS771-28	Light control siren, six rocker switches, one slide switch, with detachable microphone, 100/200 watt, 28V	625.30
LCS790	Light control siren, 200 watt	789.57
LCS800-008	Unistar Command Center™, less flange	900.09
LCS800-DM8	Unistar Command Center™, less flange with detachable microphone	945.05
LCS800-F8	Unistar Command Center™, flange	900.09
LCS850-8	Unistar Command Center™, less flange	1,125.54
LCS850-DM8	Unistar Command Center™, less flange with detachable microphone	1,170.49
LCS850-F8	Unistar Command Center™, flange, Traffic Director controller	1,125.54
LCS850MG12	Unistar Command Center™, siren with amp, less flange, dual tone, 200 watt	1,409.80
LCS850MG-F12	Unistar Command Center™, siren with amp, head with flange, dual tone, 200 watt	1,409.80
LCS869	MI- Control™, small nine button siren control, small hand held control with amp, six siren, two light functions, 100 wa	383.63
LCS880-008	Unistar Command Center™, hand held	652.00
LCS881-008	Unistar Command Center™, hand held with Traffic Director controller	877.79
SS650-013	four mode economy siren, without P.A., 100 watt	176.10
SS651-013	four mode undercover siren, without P.A., 100 watt	194.35
SS651MT-013	four mode motorcycle siren with control unit, without P.A., 100 watt	395.12
SS670-013	Compact six mode siren, P.A., backlit, 100 watt	237.28
SS700-016	Six mode siren, P.A., backlit, 100/200 watt	291.36
SS730	Six mode remote siren, P.A., backlit, 100/200 watt	562.09
SS741MG-11	Six mode dual amp siren, P.A., 100/200 watt	674.65
SS741MG-DM11	Six mode dual amp siren, detachable microphone, P.A., 100/200 watt	713.52

SS867	Small seven button hand held siren control unit w/amp, six siren functions, 100 watt	349.83
Speakers		
Model Number	**Description**	**List**
D-10	Wide angle sound distribution, Fibreglass housing, 100 watt	228.83
D-30	Concealed, narrow space mounting, steel housing, 100 watt	222.07
D-44	Cyclone™ speaker, 100 watt	255.19
D-44-16	Universal “L” bracket, ‘04-’05 Dodge Durango, ‘01 Ford Taurus, ‘02-’09 Ford Explorer, ‘04-’09 GMC Envoy, ‘02-’13 Chevrolet Avalanche, ‘02-’09 Chevrolet Suburban, ‘04-’06 Chevrolet Tahoe, 100 watt Cyclone™ speaker	275.47
D-44-17	Center mount bracket, ‘03-’11 Ford Crown Victoria, 100 watt Cyclone™ speaker	275.47
D-44-18	‘07-’15 Chevrolet Suburban, ‘07-’15 Chevrolet Tahoe, 100 watt Cyclone™ speaker	275.47
D-44-19	‘06-’13 Chevrolet Impala, 100 watt Cyclone™ speaker	275.47
D-44-20	‘06-’13 Dodge Charger, 100 watt Cyclone™ speaker	275.47
D-44-21	Universal two piece adjustable bracket, 100 watt Cyclone™ speaker	275.47
D-44-22L	‘08-’09 Ford F-Series Super Duty, driver side, 100 watt Cyclone™ speaker	275.47
D-44-22R	‘08-’09 Ford F-Series Super Duty, passenger side, 100 watt Cyclone™ speaker	275.47
D-44-23	‘08-’15 E-350/450, 100 watt Cyclone™ speaker	275.47
D-44-24	‘07-’15 Ford Expedition, 100 watt Cyclone™ speaker	275.47
D-44-27	‘11-’15 Dodge Charger, 100 watt Cyclone™ speaker	275.47
D-44-28	‘10-’15 Ford Taurus, 100 watt Cyclone™ speaker	275.47
D-44-29	‘11-’15 Ford F350, 100 watt Cyclone™ speaker	275.47
D-44-30	‘11-’15 Dodge 4500, 100 watt Cyclone™ speaker	275.47
D-44-31	‘11-’15 Chevrolet Caprice, 100 watt Cyclone™ speaker	275.47
D-44-32	‘11-’15 dual bracket for Dodge Charger, 100 watt (each) Cyclone™ speaker	550.26
D-44-33	‘10-’15 Dodge Durango, 100 watt Cyclone™ speaker	275.47
D-44-34	‘10-’15 dual bracket for Inspector SUV, 100 watt (each) Cyclone™ speaker	550.26
D-44-35	‘15 Chevy Tahoe, Suburban Cyclone™ speaker	275.47
D-44-FIS	‘10-’15 Ford Interceptor Sedan, Cyclone speaker™ w/SPBRK-28 installed, direct Plug-n-Play, 100 watt	285.27
D-44-FISUV	‘10-’15 Ford Interceptor SUV, Cyclone speaker™ w/SPBRK-28 installed, direct Plug-n-Play, 100 watt	285.27
D-60	ABS plastic housing, 100 watt	220.38
D-60C	High visibility, high gloss electro polished aluminum housing, 100 watt	288.31
D-60LP	Low profile mounting, ABS plastic housing, 100 watt	218.35
D-60RBB	Compact for motorcycles, ABS plastic housing, 100 watt	241.67
D-60RBS	Compact for motorcycles, high glass electro polished aluminum housing, 100 watt	241.67

TERMS AND ORDERING INFORMATION

SALES POLICY: All Star Headlight & Lantern Co., Inc. products are sold through distributors. Possession of our catalog and/or price list does not constitute our offer to sell to or the right to purchase directly from Star Headlight & Lantern Co., Inc.

PRICING: Prices are subject to increase, without prior notification, based on Star Headlight & Lantern Co., Inc.'s current selling price at the time of shipment. Taxes are not included in the price list. Star Headlight & Lantern Co., Inc. will add all applicable taxes to the invoice where required by law. Minimum purchase order - $100.00. Minimum parts order-$25.00. A service charge of $10.00 will be added to all orders not meeting minimum requirements. A service charge of $10.00 will be added to all air shipment orders. Prepaid freight on orders over $1000.00 net invoice. This offer is limited to Star standard ground shipping to a single address within the continental U.S. An additional cost will be applied to expedited orders, shipments delivered by customer-specified carriers, and shipments to Alaska and Hawaii.

PAYMENT: Payment terms, for distributors with open account status, are NET 30 from date of invoice. Past due invoices will be subject to a later charge of 1-1/2% (18% annually).

DAMAGE CLAIMS: Claims for damage or loss in transit must be filed by the distributor against the carrier. Claims for shortages in shipment must be filed, in writing, with Star Headlight & Lantern Co. no more than 10 days from receipt of shipment.

DELIVERY: Star Headlight & Lantern Co., Inc. will make every effort to deliver ordered merchandise on the date requested by the distributor. Star Headlight & Lantern Co., Inc. shall not be liable for any damages to the distributor arising out of delayed shipments where the delivery circumstances are beyond the control of Star Headlight & Lantern Co., Inc.

RETURNS: You must contact Star Headlight & Lantern Co., Inc. prior to returning any merchandise. All returns require a Returned Goods Authorization Number (RGA #). The RGA# must be clearly marked on the package and associated paperwork. All returned merchandise is subject to inspection. Any items returned for repair that are deemed to be out of warranty are subject to parts replacement cost. If a returned item is out of warranty, the sender will be notified prior to any work being performed with an estimated cost of repair. No repairs will be done until proper authorization is obtained from the sender. Any merchandise returned for restock/credit that is not in new and saleable condition will be returned to the distributor issued and no credit will be issued. All items returned for restock are subject to a 15% restocking fee.

INSTALLATION: It is the sole responsibility of the owner to ensure their warning light is secure. Check the light every time you use the vehicle to ensure that it is mounted securely. Star Headlight & Lantern Co., Inc. assumes no responsibility for the secure mounting of this light. If you are mounting the light on the roof of your vehicle with a magnetic mount, take extreme care to ensure that the magnet is firmly seated on your roof, and that the pull of the magnet is sufficient to secure the light in place. As the composition of the metal in the roofs of different vehicles may vary, as well as the contour, texture and/or condition, Star Headlight & Lantern Co., Inc. cannot guarantee the ability of any magnetically mounted light to remain in place upon a moving vehicle and it is done at the sole discretion of the owner.

WARRANTY: The manufacturer warrants each new product, under normal use, against factory defects in material and workmanship for one year after the date of purchase. The owner will be responsible for returning to the Service Center any defective item(s) with the transportation costs prepaid. The manufacturer will, without charge, repair or replace at its option, products, or part(s), which its inspection determines to be defective. Repaired or replacement item(s) will be returned to the purchaser with transportation costs prepaid from the service point. A copy of the purchaser's receipt must be returned with the defective item(s) in order to qualify for the warranty coverage. Exclusions from this warranty include, but are not limited to, bulbs, strobe tubes, domes, and/or the finish. This warranty shall not apply to any light, which has been altered, such that in the manufacturer's judgment, the performance or reliability has been affected, or if any damage has resulted from abnormal use or service. This warranty does not apply to defect or damage occurring as a result of disaster, accident, abuse, misuse, lightning, power surges, or failure to follow enclosed manuals. Any damage or defects occurring as a result of any unauthorized service or repairs by unauthorized persons shall be excluded from this warranty. There are no warranties expressed or implied (including any warranty of merchantability or fitness), which extend this warranty period. The loss of use of the product, loss of time, inconvenience, commercial loss or consequential damages, including costs of any labor, are not covered. The manufacturer reserves the right to change the design of the product without assuming any obligation to modify any product previously manufactured. This warranty gives you specific legal rights. You might also have additional rights which may vary from state to state. Some states do not allow limitations on how long an implied warranty lasts. Some states do not allow the exclusion or limitation of incidental or consequential damages. Therefore, the above limitation(s) or exclusion(s) may not apply to you.

PARTS PRICING: All parts and parts pricing is available for download at our website www.starheadlight.com.

NOTE: Bulbs and flash tubes are not covered under warranty. Speakers are not covered against water damage.

DISTRIBUTED BY:

PROUDLY MADE IN THE U.S.A.

MAILING

455 Rochester Street
Avon, NY 14414

PHONE 585-226-9787

PHONE 585-226-9500

SHIPPING

455 Rochester Street
Avon, NY 14414

FAX 888-478-2797

FAX 585-226-2029

An **ISO 9001-2008** Certified Company
www.starheadlight.com

EC Series Telescopic Crane
List Price Book

EC2000 Telescopic Cranes 1

EC3200 Telescopic Cranes 1

EC4000 Telescopic Cranes 1

EC5000 Telescopic Cranes 2

EC6000 Telescopic Cranes 2

Crane Options 2

Stabilizers 2

Boom Support 2

Crane Pedestals 3

Electrical Switching Options 3

Electrical Crane Power Options 3

Stellar Industries, Inc.
190 State Street
PO Box 169
Garner, IA 50438
800-321-3741
Fax: 641-923-2811
sales@stellarindustries.com
www.stellarindustries.com

Subject to Change without Notification.
© 2017 Stellar Industries, Inc.

Effective: 01/01/17
Last Revision: 01/01/17

Stellar Industries, Inc.
190 State Street • Garner, IA 50438
800-321-3741 • www.stellarindustries.com

Stellar® EC Series Telescopic Crane Price Sheet

Part#	Description	List Price	Install Price
	EC2000 Telescopic Cranes		
17631	Stellar Model EC2000 (60" stowed height) 6500 ft/lb., maximum 1-part line capacity 1000 lbs., maximum two-part line capacity 2000 lbs., 12V electric winch with 12' detachable remote pendant control, hand operated brake, manual rotation, manual reach to 7'. Painted white. Weight 250 lbs.	$2,990	$3,400
19146	Stellar Model EC2000 -SHORT MAST (30" stowed height) - 6500 ft/lb., maximum 1-part line capacity 1000 lbs., maximum two-part line capacity 2000 lbs., 12V electric winch with 12' detachable remote pendant control, hand operated brake, manual rotation, manual reach to 7'. Painted white. Weight 250 lbs.	$2,990	$3,400
22601	Stellar Model EC2000-P (60" stowed height)- 6500 ft/lb., maximum 1-part line capacity 1000 lbs., maximum two-part line capacity 2000 lbs., 12V electric winch with 12' detachable remote pendant control, 12V power rotation, manual reach to 7'. Painted white. Weight 275 lbs.	$5,260	$5,710
24906	Stellar Model EC2000-P (30" stowed height), 6500 ft/lb., maximum 1-part line capacity 1000 lbs., maximum 2-part line capacity 2000 lbs., 12V electric winch with 12' detachable remote pendant control, 12V power rotation, manual reach to 7', painted white	$5,260	$5,710
	EC3200 Telescopic Cranes		
42790S	Stellar Model EC3200 Telescopic crane - 11,500 ft/lb, 3200 lb. maximum capacity, 12V electric/hydraulic only, hydraulic/manual reach to 15', four-function radio remote standard,12V electric planetary winch with 17 ft./min. maximum single line speed, double acting cylinders with integral counterbalance valves, gear bearing rotation system, double boom design. Painted white. Wide mount, mounts on 20" side packs	$10,030	$10,900
44065S	Stellar Model EC3200 Telescopic crane - 11,500 ft/lb, 3200 lb. maximum capacity, 12V electric/hydraulic only, hydraulic/manual reach to 15', four-function radio remote standard, 12V electric planetary winch with 17 ft./min. maximum single line speed, double acting cylinders with integral counterbalance valves, gear bearing rotation system, double boom design. Painted white. Narrow mount, mounts on 14" side packs	$10,030	$10,900
48688	Crating Fee for EC3200, 3315 for LTL Freight. Complete plywood crate to protect crane for shipment on LTL freight carriers. Stellar Industries is not responsible for crane damage using LTL freight.	$485	NA
	EC4000 Telescopic Cranes		
50227S	Stellar Model EC4000, 16' Version, Telescopic crane - 16,000 ft/lb, 4000 lb. maximum capacity, 12V electric/hydraulic only, hydraulic/manual reach to 16', four-function radio remote standard, 12V electric planetary winch with 16 ft./min. maximum single line speed, double acting cylinders with integral counterbalance valves, gear bearing rotation system, double boom design. Painted white.	$13,280	$14,230

Stellar Industries, Inc.
190 State Street • Garner, IA 50438
800-321-3741 • www.stellarindustries.com

Stellar® EC Series Telescopic Crane Price Sheet

Part#	Description	List Price	Install Price
51285S	Stellar Model EC4000, 20' Version, Telescopic crane - 16,000 ft/lb, 4000 lb. maximum capacity, 12V electric/hydraulic only, hydraulic/manual reach to 20', four-function radio remote standard, 12V electric planetary winch with 16 ft./min. maximum single line speed, double acting cylinders with integral counterbalance valves, gear bearing rotation system, double boom design. Painted white.	$14,070	$15,040
	EC5000 Telescopic Cranes		
50610S	Stellar Model EC5000 Telescopic crane - 25,000 ft/lb, 5000 lb. maximum capacity, 12V electric/hydraulic only, hydraulic/manual reach to 20', four-function radio remote standard, 12V electric planetary winch with 16 ft./min. maximum single line speed, double acting cylinders with integral counterbalance valves, gear bearing rotation system, double boom design. Painted white.	$14,750	$15,720
	EC6000 Telescopic Cranes		
53376S	Stellar Model EC6000 Telescopic crane - 38,000 ft/lb, 6000 lb. maximum capacity, 12V electric/hydraulic only, hydraulic/manual reach to 20', four-function radio remote standard, 12V electric planetary winch with 16 ft./min. maximum single line speed, double acting cylinders with integral counterbalance valves, gear bearing rotation system, double boom design. Painted white.	$16,320	$17,330
	Crane Options		
9455	Paint crane other than standard white (Z1)	$855	NA
40840	Charger, 12V with 4 AA batteries included - Not for CDTplus Cranes	$95	NA
	Stabilizers		
20959	Stabilizer assembly, crank down, 7000# (2 stabilizers)	$475	$570
44578	Stabilizer assembly, crank down, 7000# (1 stabilizer)	$250	$305
12344	Stabilizer, manual out/crank down - for non-Stellar mechanics body with corner mount crane support, painted black, weld-on	$2,030	$2,190
12645	Stabilizers, manual out/hydraulic down - for non-Stellar mechanics body with corner mount crane support, painted black, weld-on	$3,720	$4,140
12342	Stabilizer, hydraulic out/hydraulic down - for non-Stellar mechanics body with corner mount crane support, painted black, weld-on	$4,630	$5,170
	Boom Support		
43949	Boom support for EC3200 crane	$105	$140
51930	Boom Support, Adjustable, EC4000, EC5000, EC6000 (Required with raised compartment in front of crane)	$270	$315
52507	Boom Support, Fixed Flat, EC4000, EC5000, EC6000	$180	$210
39027	Single part line down haul weight	$125	NA

Stellar Industries, Inc.
190 State Street • Garner, IA 50438
800-321-3741 • www.stellarindustries.com

Stellar® EC Series Telescopic Crane Price Sheet

Part#	Description	List Price	Install Price
	Crane Pedestals		
52570	Crane Pedestal - 14" High - EC3200, 3315	$405	NA
52568	Crane Pedestal - 18" High - EC3200-EC5000, 3315-4420	$590	NA
52566	Crane Pedestal - 24" High - EC3200-EC5000, 3315-4420	$620	NA
52502	Crane Pedestal - 36" High - EC3200-EC5000, 3315-4420	$695	NA
	Electrical Options - Light Duty (3315, 4421, 5521) and EC Series Cranes		
34536	Front VEC Control panel (Includes body harness, relay board kit)	$2,140	$2,180
34537	Rear VEC Control panel (Includes body harness, relay board kit, rear mount kit)	$1,950	$1,990
34535	Dual VEC Control panel (Includes body harness, relay board kit, rear mount kit)	$2,320	$2,370
48373	Basic crane electrical installation kit, includes 5 relays, switch, instruction sheet. Used to manually wire all functions to chassis	$75	NA
72974	Pedestal Mount - E-Link/VEC (Ford F250 - F750)	$200	NA
72975	Pedestal Mount - E-Link/VEC (RAM Chassis)	$200	NA
	Electrical Crane Power Options (Not needed for EC cranes installed at Stellar)		
64172	Power Cable kit - EC3200 - EC5000 crane - NO AUXILIARY BATTERY, 35' of #2/ 2 wire cable for between batteries, 25' of 14 ga for switching, BOSCH Relay, NOTE: Customer must use chassis dash switches or self supplied.	$270	NA
44649	Power Cable kit - EC3200 - EC5000 crane - Includes deep cycle battery, battery box, 25' of #2/ 2 wire cable for between batteries, 200 amp solenoid, 10' of 1/0 for between second battery and crane.	$540	NA
65124	Power Cable kit - EC6000 crane - Includes deep cycle battery, battery box, 25' of #2/ 2 wire cable for between batteries, 200 amp solenoid, 10' of 2/0 for between second battery and crane.	$570	NA

Heavy Duty Telescopic Crane

List Price Book

7621 & 7630 Telescopic Cranes 1

9621 & 9630 Telescopic Cranes 1

10621 & 10630 Telescopic Cranes 1

12621 & 12630 Telescopic Cranes 1

14530 Telescopic Cranes 1

Crane Options 1

PTOs 1

Hydraulic Pumps 2

Stabilizers 2

Stabilizers - For Knapheide Crane Bodies 2

Boom Support 2

Hydraulic Reservoirs 2

Additional Leaf Springs 3

Speed Controls 3

Electrical Options 3

Stellar Industries, Inc.
190 State Street
PO Box 169
Garner, IA 50438
800-321-3741
Fax: 641-923-2811
sales@stellarindustries.com
www.stellarindustries.com

Subject to Change without Notification.
© 2017 Stellar Industries, Inc.

Effective: 01/01/17
Last Revision: 01/01/17

Stellar Industries, Inc.
190 State Street • Garner, IA 50438
800-321-3741 • www.stellarindustries.com

Stellar® Heavy Duty Telescopic Crane Price Sheet

Part#	Description	List Price	Install Price
	7621 & 7630 Telescopic Cranes		
70951S	Stellar® 7621 Telescopic Crane - 44,840 ft/lb rated, 7,500 lb. maximum capacity - 21' full hydraulic reach - CDTplus™ equipped proportional radio remote control.	$20,710	$22,020
71596S	Stellar® 7630 Telescopic Crane - 44,840 ft/lb rated, 7,500 lb. maximum capacity - 30' full hydraulic reach - CDTplus™ equipped proportional radio remote control.	$22,360	$23,700
	9621 & 9630 Telescopic Cranes		
74659S	Stellar® 9621 Telescopic Crane - 70,800 ft/lb rated, 9,000 lb. maximum capacity - 21' full hydraulic reach - CDTplus™ equipped proportional radio remote control.	$23,390	$24,760
74658S	Stellar® 9630 Telescopic Crane - 70,800 ft/lb rated, 9,000 lb. maximum capacity - 30' full hydraulic reach - CDTplus™ equipped proportional radio remote control.	$25,860	$27,280
	10621 & 10630 Telescopic Cranes		
74657S	Stellar® 10621 Telescopic Crane - 70,800 ft/lb rated, 10,000 lb. maximum capacity - 21' full hydraulic reach - CDTplus™ equipped proportional radio remote control.	$23,390	$24,760
74656S	Stellar® 10630 Telescopic Crane - 70,800 ft/lb rated, 10,000 lb. maximum capacity - 30' full hydraulic reach - CDTplus™ equipped proportional radio remote control.	$25,860	$27,280
	12621 & 12630 Telescopic Cranes		
71575S	Stellar® 12621 Telescopic Crane - 77,800 ft/lb rated, 12,000 lb. maximum capacity - 21' full hydraulic reach - CDTplus™ equipped proportional radio remote control.	$24,000	$25,390
70800S	Stellar® 12630 Telescopic Crane - 77,800 ft/lb rated, 12,000 lb. maximum capacity - 30' full hydraulic reach - CDTplus™ equipped proportional radio remote control.	$26,480	$27,910
	14530 Telescopic Cranes		
74652S	Stellar® 14530 Telescopic Crane 82,600 ft/lb rated, 14,000 lb. maximum capacity - 30' full hydraulic reach - CDTplus™ equipped proportional radio remote control.	$34,920	$36,520
	Crane Options		
9455	Paint crane other than standard white (Z1)	$855	NA
40840	Charger, 12V with 4 AA batteries included - Not for CDTplus Cranes	$95	NA
39027	Single part line down haul weight	$125	NA
61924	Crane boom tip light - Single LED Trilliant For Bar Style Flip Sheave	$375	$485

Stellar Industries, Inc.
190 State Street • Garner, IA 50438
800-321-3741 • www.stellarindustries.com

Stellar® Heavy Duty Telescopic Crane Price Sheet

Part#	Description	List Price	Install Price
61925	Crane boom tip light - Double LED Trilliant For Bar Style Flip Sheave	$515	$645
	PTOs		
1599	PTO, standard cable-control for manual transmission	$715	$1,010
5355	PTO, air shift	$785	$1,240
24011	PTO for automatic transmission for IH TerraStar	$1,540	$2,020
15685	PTO, hot shift for automatic transmission for chassis larger than F550	$1,870	$2,190
8150	PTO for automatic transmission for Ford Super Duty (4X2 or 4X4)	$1,540	$2,020
44477	PTO for automatic transmission for RAM / DODGE	$1,540	$2,020
	Hydraulic Pumps		
9022	Hydraulic pump, single section for crane only	$505	$1,010
9023	Hydraulic pump, tandem section for crane and compressor	$1,290	$1,810
	Stabilizers		
12344	Stabilizer, manual out/crank down - for non-Stellar mechanics body with corner mount crane support, painted black, weld-on	$2,030	$2,190
12645	Stabilizers, manual out/hydraulic down - for non-Stellar mechanics body with corner mount crane support, painted black, weld-on	$3,720	$4,140
12342	Stabilizer, hydraulic out/hydraulic down - for non-Stellar mechanics body with corner mount crane support, painted black, weld-on	$4,630	$5,170
31721	Heavy duty rear stabilizers for 14530 crane for installation on non-Stellar body	$5,630	NA
32228	Heavy duty stabilizer set, front and rear, for 14530 crane for installation on non-Stellar body	$9,570	NA
29180	Heavy duty stabilzers for Stellar TMAX 3 Tandem # 82199 ONLY. This assembly includes power down rear stabilzers with CS power out, power down CS and SS front stabilizer. FOR STELLAR BODY #82199 ONLY	$8,550	$8,950
29953	Hydraulic out and down stabilizer - street side and curbside for non-Stellar mechanics body. Handles up to 14530 crane	$6,880	NA
53696	Stabilizer Kit - Auxiliary - Hydraulic out and Down Both Sides - Supports up to 66,000 ft.lb. crane.	$5,250	NA
	Stabilizers - For Knapheide Crane Bodies		
12646	Stabilizer, manual out / crank down - fits Knapheide crane bodies only	$1,400	NA
12644	Stabilizer, manual out / hydraulic down - fits Knapheide crane bodies only	$2,630	NA
11989	Stabilizer, hydraulic out / hydraulic down - fits Knapheide crane bodies only	$3,250	NA
	Boom Support		
38101	Adjustable boom support with roller rest, painted black, for TMAX1/TMAX2/TMAX3 body	$320	$360

Stellar Industries, Inc.
190 State Street • Garner, IA 50438
800-321-3741 • www.stellarindustries.com

Stellar® Heavy Duty Telescopic Crane Price Sheet

Part#	Description	List Price	Install Price
	Hydraulic Reservoirs		
70714	Hydraulic reservoir, 20 gallon, bulkhead mounted, for Stellar body, painted black	$845	$1,440
	Additional Leaf Springs		
Note: When mounting crane on chassis with air suspension, make sure to order dual load leveling valve from chassis manufacturer.			
C0417	Leaf springs, installed on crane side of chassis	$510	$495
85209	Super Spring for Ford F550-Single Leaf. For use with Mechanic EC4000/EC5000/4421/5521 and Tire Service 4500 Cranes.	$510	$520
85208	Super Spring for Ford F550-Double Leaf. For use with Mechanic 76 Series Cranes.	$510	$520
85211	Super Spring for RAM 5500-Single Leaf. For use with Mechanic EC4000/EC5000/4421/5521 and Tire Service 4500 Cranes.	$510	$520
85210	Super Spring for RAM 5500-Double Leaf. For use with Mechanic 76 Series Cranes.	$510	$520
	Speed Controls		
56590S	Electronic load-sensing speed control for Ford diesel and gas engines	$630	$725
32095	Electronic load-sensing speed control for 2005 -2010 Ford diesel engines	$630	NA
24853	Programmable speed control assembly for automatic transmission with Dura-max diesel for C4500/5500 (2007-2009)	$415	$505
8295	Program speed control for Cat engine	NA	$265
37981X	Program speed control for Cummins engine	$265	$265
22041	Program speed control for IH DT466/444 and MaxxForce7 engines	NA	$265
25387X	Program speed control for MB engine	$495	$495
75463	Speed Control - Any Ford, RAM or GM Without a PTO.	$260	$340
68994	Speed control - RAM ONLY, 2013 - 2016. (2014 MY trucks will need VISM changed)	$260	$340
	Electrical Options - Heavy Duty Cranes (7621 to 14530)		
85450	E-Link 2.0 Basic - Cab Mounted / Rear Mounted Manual Switches (Includes body harness and PDM)	$2,320	$2,370
75749X	Truck Upfitter Switches Wiring Package-INSTALLED	$790	$790
72974	Pedestal Mount - E-Link/VEC (Ford F250 - F750)	$200	NA
72975	Pedestal Mount - E-Link/VEC (RAM Chassis)	$200	NA
48373	Basic crane electrical installation kit, includes 5 relays, switch, instruction sheet. Used to manually wire all functions to chassis	$75	NA

Hooklift
List Price Book

Stellar® Flex36 1
- Hook Height Options 1
- Tab Alarms 1
- Latch Options 1
- Hydraulics with Controls 1
- Standard Hooklift Additions .. 1
- PTOs 2
- Pumps 2
- Fenders 2
- Mudflaps 2
- Bumpers 2
- Pintle Hitches 2
- ICC Safety Kit 3
- Toolboxes 3
- Floodlights 3
- Trailer Plugs 3
- Service and Emergency 3

Stellar® Shuttle20 4
- Hook Height Options 4
- Tab Alarms 4
- Hydraulics with Controls 4
- Standard Hooklift Additions .. 4
- PTOs 4
- Pumps 4
- Fenders 5
- Mudflaps 5
- Bumpers 5
- Pintle Hitches 5
- ICC Safety Kit 5
- Toolboxes 5
- Floodlights 6
- Trailer Plugs 6
- Service and Emergency 6

Stellar® Shuttle24 7
- Hook Height Options 7
- Tab Alarms 7
- Hydraulics with Controls 7
- Standard Hooklift Additions .. 7
- PTOs 7
- Pumps 7
- Fenders 7
- Mudflaps 8
- Bumpers 8
- Pintle Hitches 8
- ICC Safety Kit 8
- Toolboxes 8
- Floodlights 9
- Trailer Plugs 9
- Service and Emergency 9

Stellar® Shuttle32 10
- Tab Alarms 10
- Hydraulics with Controls 10
- Standard Hooklift Additions 10
- PTOs 10
- Pumps 10
- Fenders 10
- Mudflaps 11
- Bumpers 11
- Pintle Hitches 11
- Tarpers 11
- ICC Safety Kit 11
- Toolboxes 11
- Floodlights 12
- Trailer Plugs 12
- Service and Emergency 12

Stellar® Shuttle34 13
- Tab Alarms 13
- Hydraulics with Controls 13
- Standard Hooklift Additions 13
- PTOs 13
- Pumps 13
- Fenders 13
- Mudflaps 13
- Bumpers 14
- Pintle Hitches 14
- ICC Safety Kit 14
- Toolboxes 14
- Floodlights 14
- Trailer Plugs 14
- Service and Emergency 14

Stellar® Shuttle40 16
- Tab Alarms 16
- Hydraulics with Controls 16
- Standard Hooklift Additions 16
- PTOs 16
- Pumps 16
- Fenders 16
- Mudflaps 17
- Bumpers 17
- Pintle Hitches 17
- Tarpers 17
- ICC Safety Kit 17
- Toolboxes 17
- Floodlights 18
- Trailer Plugs 18
- Service and Emergency 18

Stellar® Shuttle52 19
- Tab Alarms 19
- Hydraulics with Controls 19
- Standard Hooklift Additions 19
- PTOs 19
- Pumps 19
- Fenders 19
- Mudflaps 20
- Bumpers 20
- Pintle Hitches 20
- Tarpers 20
- ICC Safety Kit 20
- Toolboxes 20
- Floodlights 21
- Trailer Plugs 21
- Service and Emergency 21

Stellar® Shuttle65 22
- Hydraulics with Controls 22
- Standard Hooklift Additions 22
- PTOs 22

Stellar Industries, Inc.
190 State Street
PO Box 169
Garner, IA 50438
800-321-3741
Fax: 641-923-2811
sales@stellarindustries.com
www.stellarindustries.com

Subject to Change without Notification.
© 2017 Stellar Industries, Inc.

Effective: 01/01/17
Last Revision: 01/01/17

Pumps 22
Fenders 22
Mudflaps 23
Bumpers 23
Pintle Hitches 23
Tarpers 23
ICC Safety Kit 23
Toolboxes 23
Floodlights 23
Trailer Plugs 24
Service and Emergency 24

Stellar® Slider20 25
Hydraulics with Controls 25
Standard Hooklift Additions 25
PTOs 25
Pumps 25
Fenders 25
Mudflaps 26
Bumpers 26
Pintle Hitches 26
ICC Safety Kit 26
Toolboxes 26
Floodlights 26
Trailer Plugs 27
Service and Emergency 27

Stellar® Slider20-S 28
Body Latches 28
Hydraulics with Controls 28
Standard Hooklift Additions 28
PTOs 28
Pumps 29
Fenders 29
Mudflaps 29
Bumpers 29
Pintle Hitches 29
ICC Safety Kit 29
Toolboxes 29
Floodlights 30
Trailer Plugs 30
Service and Emergency 30

Stellar® Slider26 31
Hook Height Options 31
Body Latches 31
Hydraulics with Controls 31
Standard Hooklift Additions 32
PTOs 32
Pumps 32
Fenders 32
Mudflaps 32
Bumpers 32
Pintle Hitches 33
ICC Safety Kit 33
Toolboxes 33
Floodlights 33
Trailer Plugs 33
Service and Emergency 33

Stellar® Slider34 34
Hydraulics with Controls 34
Standard Hooklift Additions 34
PTOs 34
Pumps 34
Fenders 35
Mudflaps 35
Bumpers 35
Pintle Hitches 35
ICC Safety Kit 35
Toolboxes 35
Floodlights 36
Trailer Plugs 36
Service and Emergency 36

Stellar® Slider40 37
Body Latches 37
Hydraulics with Controls 37
Standard Hooklift Additions 37
PTOs 37
Pumps 38
Fenders 38
Mudflaps 38
Bumpers 38
Pintle Hitches 38
ICC Safety Kit 38
Toolboxes 38
Floodlights 39
Trailer Plugs 39
Service and Emergency 39

Stellar® Slider50 40
Body Latches 40
Hydraulics with Controls 40
Standard Hooklift Additions 40
PTOs 41
Pumps 41
Fenders 41
Mudflaps 41
Bumpers 41
Pintle Hitches 41
Tarpers 41
ICC Safety Kit 41
Toolboxes 41
Floodlights 42
Trailer Plugs 42
Service and Emergency 42

Stellar® Slider65 43
Hydraulics with Controls 43
Standard Hooklift Additions 43
PTOs 43
Pumps 43
Fenders 44
Mudflaps 44
Bumpers 44
Pintle Hitches 44
Tarpers 44
ICC Safety Kit 44
Toolboxes 44
Floodlights 45
Trailer Plugs 45
Service and Emergency 45

Stellar® SI 710 46
Hook Height Options 46
Latch Options 46
Hydraulics with Controls 46
Standard Hooklift Additions 46
PTOs 46
Pumps 46
Fenders 47
Mudflaps 47
Bumpers 47
Pintle Hitches 47
ICC Safety Kit 47
Toolboxes 47
Floodlights 48
Trailer Plugs 48
Service and Emergency 48

Stellar® Hooklift Skids & Misc Options 49

Stellar Industries, Inc.
190 State Street • Garner, IA 50438
800-321-3741 • www.stellarindustries.com

Stellar® Flex36 Hooklift Price Sheet

Up to 16,000 Lbs Capacity

Part#	Description	List Price	Install Price
Note: Hooklift only with mounting kit. Select hydraulics, including reservoir, from list below. Hooklifts hydraulic requirements are 15gpm @ 4200 psi maximum. Hydraulic Pump not included in base hooklift. Select from list below.			
SHFLEX-60	Stellar Shuttle 60-8 Flex(up to 9,000# capacity), designed for 60" CA chassis. Body lengths 8' -9'; up to 10' flatbed. Shipping weight approx. 1300 lb.	$10,830	$14,080
SHFLEX-84	Stellar Shuttle 84-10 Flex, designed for 84" to 96" CA chassis. Body lengths 10' - 12'; up to 13' flatbed. Shipping weight approx. 1400 lb.	$12,830	$16,240
SHFLEX-108	Stellar Shuttle 108-12 Flex designed for 108" to 120" CA chassis. Body lengths 12' - 14'; up to 15' flatbed. Shipping weight approx. 1900 lb.	$13,660	$17,180
SHFLEX-120	Stellar Shuttle 120-14 Flex, designed for 120" to 130" CA chassis. Body lengths 12' - 14' long, up to 16' flatbed. Shipping weight approx. 1650 lb.	$14,080	$17,510
Hook Height Options			
SHFLEXHH36	36" hook height	NA	NA
SHFLEXHH36L MT	36" hook height- limited travel. Tilt will not exceed vertical.	NA	NA
SHFLEXHH54	54" hook height	$815	NA
Tab Alarms			
SHFLEXTA1	Tab alarm (tilt/dump) kit. Audible alarm to alert operator that he has operated hooklift out of sequence and needs to replace 1/4" bolt in dump tab.	$210	$365
Latch Options			
SHFLEXBL0	Standard Stellar body latches	NA	NA
SHFLEXBL4ML	4" Multi-Lift latches	$700	$925
SHFLEXBL5ML	5" Multi-Lift latches	$215	$435
Hydraulics with Controls			
HYD10VAL	Reservoir and valve bank only-no controls	$865	NA
HYD10A2	Reservoir and valve bank with air controls-2 section	$1,740	$1,770
HYD10C2-96	Reservoir and valve bank with cable controls-96"	$1,010	$1,030
HYD10C2-144	Reservoir and valve bank with extended cable controls- 144" of extended cab or cabover	$1,060	$1,080
HYD10C2-192	Reservoir and valve bank with extended cable controls- 192" of crew cab or cabover	$1,240	$1,260
Standard Hooklift Additions			
POTBL	Paint other than standard black	$390	NA
SHFLEXPSS	Stainless steel pins in lieu of zinc plated pins, for heavy salt type enviroment. CONSULT FACTORY	$1,240	NA

Stellar Industries, Inc.
190 State Street • Garner, IA 50438
800-321-3741 • www.stellarindustries.com

Stellar® Flex36 Hooklift Price Sheet

Up to 16,000 Lbs Capacity

Part#	Description	List Price	Install Price
	PTOs		
1599	PTO, standard cable-control for manual transmission	$715	$1,010
67132	PTO for Ford Super Duty Diesel	$1,540	$2,020
24011	PTO for automatic transmission for IH TerraStar	$1,540	$2,020
44477	PTO for automatic transmission for RAM / DODGE	$1,540	$2,020
15685	PTO, hot shift for automatic transmission for chassis larger than F550	$1,870	$2,190
	Pumps		
75002	Hydraulic pump kit for Ford F550 Super Duty 4x2 and 4x4.	$620	$895
56432	Hydraulic pump for chassis above 19,500# GVW. Use with Dodge and IH chassis.	$1,030	$1,330
	Fenders		
15681	One pair poly fenders for single axle truck, 16.5" to 19.5" dual rear wheels, complete with fender brackets and mounting hardware. Mud flaps included with factory installation only	$660	$980
47990	One pair steel fenders for single axle truck, 16.5" to 19.5" dual rear wheels, complete with fender brackets and mounting hardware. Mud flaps included with factory installation only	$885	$1,210
	Mudflaps		
19494	One pair Stellar mud flaps with mounting bolts (included in factory installation)	$55	NA
	Bumpers		
81300	30k Pintle Hitch Bumper Assembly. Includes FMVSS108 Compliant Light Kit, Backup Alarm, and Wiring	$990	$1,250
5348	Manually-operated fold out single pivot rear bumper. Extends bumper an additional 19" past the rear of truck when a long body is loaded. Provides for up to 42" allowable overhang	$920	$1,250
5407	Heavy duty rectangular tubing bumper. LED light kit (FMVSS108 compliant) and backup alarm is included. Must be used on 25,000 # GVWR or greater chassis. Will not work on 19,500# GVWR chassis. Stellar AutoTarper ready.	$1,240	$1,580
	Pintle Hitches		
19107	Pintle hitch with 2" ball	$300	$330
	ICC Safety Kit		
5305	ICC safety kit consisting of rechargeable fire extinguisher and reflector kit	$135	$160
	Toolboxes		

Stellar Industries, Inc.
190 State Street • Garner, IA 50438
800-321-3741 • www.stellarindustries.com

Stellar® Flex36 Hooklift Price Sheet

Up to 16,000 Lbs Capacity

Part#	Description	List Price	Install Price
8480	Steel underbody toolbox with overhead door. Dimensions are 20"H x 45"L x 22" D. Features stainless steel automotive-type two-stage latches. Includes mounting brackets. Painted gloss black	$920	$1,030
10401	Steel underbody toolbox with overhead door. Dimensions are 18"H x 36"L x 18"D. Features stainless steel automotive-type two-stage latches and stainless steel hinges. Includes mounting brackets. Painted gloss black	$890	$1,140
10402	Steel underbody toolbox with overhead door. Dimensions are 20"H x 58"L x 22"D. Features stainless steel automotive-type two-stage latches and stainless steel hinges. Includes mounting brackets. Painted gloss black	$1,090	$1,350
	Floodlights		
74311	LED Flood Light Assembly	$85	$105
	Trailer Plugs		
22872	Trailer plug - 7 pin round	$95	$225
22876	Trailer plug - 7-pin (flat)	$95	$225
	Service and Emergency		
37733	Service and emergency gladhands with dummies and mounting bracket	$115	$210
34341	Install customer-supplied gladhands	NA	$160

Note: Any new or used chassis received by Stellar Industries for upfit is subject to additional charges based on time and material to allow for proper installation of Stellar® Products on chassis.

Stellar Industries, Inc.
190 State Street • Garner, IA 50438
800-321-3741 • www.stellarindustries.com

Stellar® Shuttle Hooklift Price Sheet

20,000 Lbs Capacity

Part#	Description	List Price	Install Price
Note: Hooklift only with mounting kit. Select hydraulics, including reservoir, from list below. Hooklifts hydraulic requirements are 15gpm @ 4200 psi maximum. Hydraulic Pump not included in base hooklift. Select from list below.			
SH20-108	Stellar Shuttle 108-11-20, designed for 102" to 108" CA chassis. Body lengths 11 - 14', up to 15' flatbed. Shipping weight approx. 2400 lb.	$15,860	$19,190
SH20-120	Stellar Shuttle 120-16-20, designed for 114" to 130" CA chassis. Body lengths 13 -16'; up to 17' flatbed. Shipping weight approx. 2600 lb.	$16,600	$20,000
SH20-138	Stellar Shuttle 138-18-20, designed for 130" to 144" CA chassis. Body lengths 15 - 18', up to 19' flatbed. Shipping weight approx. 3200 lb.	$17,560	$20,960
SH20-168	Stellar Shuttle 168-20-20, designed for 1168" to 180" CA chassis. Body lengths 17 - 20', up to 21' flatbed. Shipping weight approx. 3750 lb.	$17,990	$21,420
SH20-190	Stellar Shuttle 190-24-20 designed for 190" to 200" CA chassis. Body lengths 19' - 22'; up to 24' flatbed. Shipping weight approx. 3950 lb.	$18,940	$22,380
Hook Height Options			
SH20HH54	54" Hook Height- Not available on 168" or 190"	NA	NA
SH20HH36	36" Hook Height- 108" only	$210	$210
SH20HH62	62" Hook Height	$210	$210
Tab Alarms			
SH20TA1	Electric tab alarm	$210	$365
Hydraulics with Controls			
HYD10VAL	Reservoir and valve bank only-no controls	$865	NA
HYD10A2	Reservoir and valve bank with air controls-2 section	$1,740	$1,770
HYD10C2-96	Reservoir and valve bank with cable controls-96"	$1,010	$1,030
HYD10C2-144	Reservoir and valve bank with extended cable controls- 144" of extended cab or cabover	$1,060	$1,080
HYD10C2-192	Reservoir and valve bank with extended cable controls- 192" of crew cab or cabover	$1,240	$1,260
Standard Hooklift Additions			
POTBL	Paint other than standard black	$390	NA
PTOs			
1599	PTO, standard cable-control for manual transmission	$715	$1,010
5355	PTO, air shift	$785	$1,240
15685	PTO, hot shift for automatic transmission for chassis larger than F550	$1,870	$2,190
Pumps			

Stellar Industries, Inc.
190 State Street • Garner, IA 50438
800-321-3741 • www.stellarindustries.com

Stellar® Shuttle Hooklift Price Sheet

20,000 Lbs Capacity

Part#	Description	List Price	Install Price
56432	Hydraulic pump for chassis above 19,500# GVW. Use with Dodge and IH chassis.	$1,030	$1,330
	Fenders		
6170	One pair poly fenders for 20,000 to 28,000# GVWR chassis with 22.5 wheels, includes fender brackets, mounting hardware. Mud flaps included with factory installation only	$585	$910
46299	One pair steel fenders for 20,000 to 28,000# GVWR chassis with 22.5 wheels, includes fender brackets, mounting hardware. Mud flaps included with factory installation only	$940	$1,250
66325	FENDER ASM AL SMOOTH LOW-PRO	$670	NA
	Mudflaps		
19494	One pair Stellar mud flaps with mounting bolts (included in factory installation)	$55	NA
	Bumpers		
61729	ICC Bumper w/ Lights (Tarper Application)	$400	$815
5407	Heavy duty rectangular tubing bumper. LED light kit (FMVSS108 compliant) and backup alarm is included. Must be used on 25,000 # GVWR or greater chassis. Will not work on 19,500# GVWR chassis. Stellar AutoTarper ready.	$1,240	$1,580
5348	Manually-operated fold out single pivot rear bumper. Extends bumper an additional 19" past the rear of truck when a long body is loaded. Provides for up to 42" allowable overhang	$920	$1,250
17441	Bumper, reinforced to accept pintle hitch 30K (pintle hitch is not included). LED light kit (FMVSS108 compliant) and backup alarm is included. Stellar AutoTarper ready	$1,660	$1,960
31920	Manually-operated fold out single pivot rear bumper with 30K pintle plate. Extends bumper an additional 19" past the rear of truck when a long body is loaded. Provides for up to 42" allowable overhang	$1,940	$2,280
	Pintle Hitches		
57952	Pintle Hitch - 30,000 lb	$190	$330
	ICC Safety Kit		
5305	ICC safety kit consisting of rechargeable fire extinguisher and reflector kit	$135	$160
	Toolboxes		
8480	Steel underbody toolbox with overhead door. Dimensions are 20"H x 45"L x 22" D. Features stainless steel automotive-type two-stage latches. Includes mounting brackets. Painted gloss black	$920	$1,030

Stellar Industries, Inc.
190 State Street • Garner, IA 50438
800-321-3741 • www.stellarindustries.com

Stellar® Shuttle Hooklift Price Sheet

20,000 Lbs Capacity

Part#	Description	List Price	Install Price
10401	Steel underbody toolbox with overhead door. Dimensions are 18"H x 36"L x 18"D. Features stainless steel automotive-type two-stage latches and stainless steel hinges. Includes mounting brackets. Painted gloss black	$890	$1,140
10402	Steel underbody toolbox with overhead door. Dimensions are 20"H x 58"L x 22"D. Features stainless steel automotive-type two-stage latches and stainless steel hinges. Includes mounting brackets. Painted gloss black	$1,090	$1,350
	Floodlights		
74311	LED Flood Light Assembly	$85	$105
	Trailer Plugs		
22876	Trailer plug - 7-pin (flat)	$95	$225
22872	Trailer plug - 7 pin round	$95	$225
	Service and Emergency		
37733	Service and emergency gladhands with dummies and mounting bracket	$115	$210
34341	Install customer-supplied gladhands	NA	$160

Note: Any new or used chassis received by Stellar Industries for upfit is subject to additional charges based on time and material to allow for proper installation of Stellar® Products on chassis.

Stellar Industries, Inc.
190 State Street • Garner, IA 50438
800-321-3741 • www.stellarindustries.com

Stellar® Shuttle Hooklift Price Sheet

24,000 Lbs Capacity

Part#	Description	List Price	Install Price
Note: Hooklift only with mounting kit. Select hydraulics, including reservoir, from list below. Hooklifts hydraulic requirements are 15gpm @ 4200 psi maximum. Hydraulic Pump not included in base hooklift. Select from list below.			
SH24-96	Stellar Shuttle 96-10-24, designed for 84" to 102" CA chassis. Body lengths 10'-12; up to 14'. Shipping weight approx. 2600 lb.	$16,590	$20,270
	Hook Height Options		
SH24HH54	54" Hook Height	NA	NA
SH24HH62	62" Hook Height	$1,080	$1,100
	Tab Alarms		
SH24TA1	Tab alarm (tilt/dump) kit. Audible alarm to alert operator that he has operated hooklift out of sequence and needs to replace 1/4" bolt in dump tab.	$210	$365
	Hydraulics with Controls		
HYD10VAL	Reservoir and valve bank only-no controls	$865	NA
HYD10A2	Reservoir and valve bank with air controls-2 section	$1,740	$1,770
HYD10C2-96	Reservoir and valve bank with cable controls-96"	$1,010	$1,030
HYD10C2-144	Reservoir and valve bank with extended cable controls- 144" of extended cab or cabover	$1,060	$1,080
HYD10C2-192	Reservoir and valve bank with extended cable controls- 192" of crew cab or cabover	$1,240	$1,260
	Standard Hooklift Additions		
SH24PSS	Stainless steel pins in lieu of zinc plated pins, for heavy salt type enviroment.	$1,240	NA
POTBL	Paint other than standard black	$390	NA
	PTOs		
1599	PTO, standard cable-control for manual transmission	$715	$1,010
5355	PTO, air shift	$785	$1,240
15685	PTO, hot shift for automatic transmission for chassis larger than F550	$1,870	$2,190
	Pumps		
56432	Hydraulic pump for chassis above 19,500# GVW. Use with Dodge and IH chassis.	$1,030	$1,330
	Fenders		
6170	One pair poly fenders for 20,000 to 28,000# GVWR chassis with 22.5 wheels, includes fender brackets, mounting hardware. Mud flaps included with factory installation only	$585	$910

Stellar Industries, Inc.
190 State Street • Garner, IA 50438
800-321-3741 • www.stellarindustries.com

Stellar® Shuttle Hooklift Price Sheet

24,000 Lbs Capacity

Part#	Description	List Price	Install Price
46299	One pair steel fenders for 20,000 to 28,000# GVWR chassis with 22.5 wheels, includes fender brackets, mounting hardware. Mud flaps included with factory installation only	$940	$1,250
66325	FENDER ASM AL SMOOTH LOW-PRO	$670	NA
	Mudflaps		
19494	One pair Stellar mud flaps with mounting bolts (included in factory installation)	$55	NA
	Bumpers		
61729	ICC Bumper w/ Lights (Tarper Application)	$400	$815
5407	Heavy duty rectangular tubing bumper. LED light kit (FMVSS108 compliant) and backup alarm is included. Must be used on 25,000 # GVWR or greater chassis. Will not work on 19,500# GVWR chassis. Stellar AutoTarper ready.	$1,240	$1,580
5348	Manually-operated fold out single pivot rear bumper. Extends bumper an additional 19" past the rear of truck when a long body is loaded. Provides for up to 42" allowable overhang	$920	$1,250
17441	Bumper, reinforced to accept pintle hitch 30K (pintle hitch is not included). LED light kit (FMVSS108 compliant) and backup alarm is included. Stellar AutoTarper ready	$1,660	$1,960
31920	Manually-operated fold out single pivot rear bumper with 30K pintle plate. Extends bumper an additional 19" past the rear of truck when a long body is loaded. Provides for up to 42" allowable overhang	$1,940	$2,280
	Pintle Hitches		
57952	Pintle Hitch - 30,000 lb	$190	$330
	ICC Safety Kit		
5305	ICC safety kit consisting of rechargeable fire extinguisher and reflector kit	$135	$160
	Toolboxes		
8480	Steel underbody toolbox with overhead door. Dimensions are 20"H x 45"L x 22" D. Features stainless steel automotive-type two-stage latches. Includes mounting brackets. Painted gloss black	$920	$1,030
10401	Steel underbody toolbox with overhead door. Dimensions are 18"H x 36"L x 18"D. Features stainless steel automotive-type two-stage latches and stainless steel hinges. Includes mounting brackets. Painted gloss black	$890	$1,140
10402	Steel underbody toolbox with overhead door. Dimensions are 20"H x 58"L x 22"D. Features stainless steel automotive-type two-stage latches and stainless steel hinges. Includes mounting brackets. Painted gloss black	$1,090	$1,350
	Floodlights		
74311	LED Flood Light Assembly	$85	$105

Stellar Industries, Inc.
190 State Street • Garner, IA 50438
800-321-3741 • www.stellarindustries.com

Stellar® Shuttle Hooklift Price Sheet

24,000 Lbs Capacity

Part#	Description	List Price	Install Price
	Trailer Plugs		
22876	Trailer plug - 7-pin (flat)	$95	$225
22872	Trailer plug - 7 pin round	$95	$225
	Service and Emergency		
37733	Service and emergency gladhands with dummies and mounting bracket	$115	$210
34341	Install customer-supplied gladhands	NA	$160

Note: Any new or used chassis received by Stellar Industries for upfit is subject to additional charges based on time and material to allow for proper installation of Stellar® Products on chassis.

Stellar Industries, Inc.
190 State Street • Garner, IA 50438
800-321-3741 • www.stellarindustries.com

Stellar® Shuttle Hooklift Price Sheet

32,000 Lbs Capacity

Part#	Description	List Price	Install Price
Note: Hooklift only with mounting kit. Select hydraulics, including reservoir, from list below. Hooklifts hydraulic requirements are 20gpm @ 4200 psi maximum. Hydraulic Pump not included in base hooklift. Select from list below.			
SH32-108	Stellar Shuttle 108-14-32, designed for 102" to 108"CT (122"-128"CA) chassis. Body lengths 13' - 16'; up to 17' flatbed. Shipping weight approx. 3600lb.	$22,870	$27,300
SH32-138	Stellar Shuttle 138-18-32, designed for 130" to 138"CT (150"-158"CA) chassis. Body lengths 15' - 18'; up to 19' flatbed. Shipping weight approx. 3900lb.	$23,490	$27,930
SH32-174	Stellar Shuttle 174-20-32, designed for 160" to 174"CT (180"-194"CA) chassis. Body lengths 18' - 20'; up to 22' flatbed. Shipping weight approx. 5000lb.	$26,480	$30,980
SH32-190	Stellar Shuttle 190-24-32, designed for 174" to 190"CT (194"-210"CA) chassis. Body lengths 19' - 22'; up to 24' flatbed. Shipping weight approx. 5000lb.	$26,890	$32,130
Tab Alarms			
Note: Tab Alarm option is only available for 108 and 138 models.			
SH32TA1	Tab alarm (tilt/dump) kit. Audible alarm to alert operator that he has operated hooklift out of sequence and needs to replace 1/4" bolt in dump tab.	$210	$365
Hydraulics with Controls			
HYDVAL	Reservoir and valve bank only-no controls	$1,310	$1,340
HYDA2	Reservoir and valve bank with two section air controls for fixed hook height	$1,450	$1,470
HYDC2-96	Reservoir and valve bank with two section cable controls for fixed hook height-96"	$1,450	$1,470
HYDC2-144	Reservoir and valve bank with two section extended controls for fixed hook height-144" for extended cab or cabover	$1,510	$1,540
HYDC2-192	Reservoir and valve bank with two section extended controls for fixed hook height-192" for crew cab or cabover	$1,550	$1,580
Standard Hooklift Additions			
POTBL	Paint other than standard black	$390	NA
SH32PSS	Stainless steel pins in lieu of zinc plated pins, for heavy salt type enviroment.	$1,240	NA
PTOs			
1599	PTO, standard cable-control for manual transmission	$715	$1,010
5355	PTO, air shift	$785	$1,240
15685	PTO, hot shift for automatic transmission for chassis larger than F550	$1,870	$2,190
Pumps			
76705	Hydraulic Pump, 3.84 CID piston Hydro Leduc w/ 2" suction and pressure fittings.	$1,310	$1,710
Fenders			

Stellar Industries, Inc.
190 State Street • Garner, IA 50438
800-321-3741 • www.stellarindustries.com

Stellar® Shuttle Hooklift Price Sheet

32,000 Lbs Capacity

Part#	Description	List Price	Install Price
58217	Poly Fender Assemblies for Tandem Axles with Mounting Brackets	$1,130	$1,790
46122	Tandem Axle Steel Fender Assemblies with Mounting Brackets	$1,100	$1,790
21132	Aluminum fenders for tandem axle, 1/8" smooth, with mounting brackets	$1,400	$1,970
	Mudflaps		
19494	One pair Stellar mud flaps with mounting bolts (included in factory installation)	$55	NA
	Bumpers		
61729	ICC Bumper w/ Lights (Tarper Application)	$400	$815
5407	Heavy duty rectangular tubing bumper. LED light kit (FMVSS108 compliant) and backup alarm is included. Must be used on 25,000 # GVWR or greater chassis. Will not work on 19,500# GVWR chassis. Stellar AutoTarper ready.	$1,240	$1,580
61363	Bumper, reinforced to accept pintle hitch 90K. (pintle not included). LED light kit (FMVSS108 compliant) and backup alarm is included. Stellar AutoTarper ready.	$1,800	$2,150
47154	Manually-operated fold out single pivot rear bumper with 90K pintle plate. Extends bumper an additional 19" past the rear of truck when a long body is loaded. Provides for up to 42" allowable overhang	$2,020	$2,420
	Pintle Hitches		
7406	PH-200 (non-air operated) pintle hitch 90000# max. gross tongue weight	$540	$685
8009	PH-200 air operated pintle hitch, 18000# vertical load, 90000# max. gross tongue weight	$630	$810
	Tarpers		
Note: The following Stellar® Auto Tarper only works with models 174-20-32 and 190-24-32			
81911	Tarper Assembly SIAT GEN2 for Use with Hooklift	$8,030	$11,130
45337	White mesh tarp for hooklift applications. Must choose this tarp when using with hooklifts.	$370	NA
	ICC Safety Kit		
5305	ICC safety kit consisting of rechargeable fire extinguisher and reflector kit	$135	$160
	Toolboxes		
8480	Steel underbody toolbox with overhead door. Dimensions are 20"H x 45"L x 22" D. Features stainless steel automotive-type two-stage latches. Includes mounting brackets. Painted gloss black	$920	$1,030
10401	Steel underbody toolbox with overhead door. Dimensions are 18"H x 36"L x 18"D. Features stainless steel automotive-type two-stage latches and stainless steel hinges. Includes mounting brackets. Painted gloss black	$890	$1,140

Stellar Industries, Inc.
190 State Street • Garner, IA 50438
800-321-3741 • www.stellarindustries.com

Stellar® Shuttle Hooklift Price Sheet

32,000 Lbs Capacity

Part#	Description	List Price	Install Price
10402	Steel underbody toolbox with overhead door. Dimensions are 20"H x 58"L x 22"D. Features stainless steel automotive-type two-stage latches and stainless steel hinges. Includes mounting brackets. Painted gloss black	$1,090	$1,350
	Floodlights		
74311	LED Flood Light Assembly	$85	$105
	Trailer Plugs		
22872	Trailer plug - 7 pin round	$95	$225
22876	Trailer plug - 7-pin (flat)	$95	$225
	Service and Emergency		
37733	Service and emergency gladhands with dummies and mounting bracket	$115	$210
34341	Install customer-supplied gladhands	NA	$160

Note: Any new or used chassis received by Stellar Industries for upfit is subject to additional charges based on time and material to allow for proper installation of Stellar® Products on chassis.

Stellar Industries, Inc.
190 State Street • Garner, IA 50438
800-321-3741 • www.stellarindustries.com

Stellar® Shuttle Hooklift Price Sheet

34,000 Lbs Capacity

Part#	Description	List Price	Install Price
Note: Hooklift only with mounting kit. Select hydraulics, including reservoir, from list below. Hooklifts hydraulic requirements are 20gpm @ 4200 psi maximum. Hydraulic Pump not included in base hooklift. Select from list below.			
SH34-138	138-18-34 Shuttle (34,000# capacity), 52° dump angle, 54" hook height, ideal for 16' containers, flatbed body lengths from 15' to 19', must specify rear latches for 120-16-20 or 138-18-20.	$25,960	$30,450
	Tab Alarms		
SH34TA1	Tab alarm (tilt/dump) kit. Audible alarm to alert operator that he has operated hooklift out of sequence and needs to replace 1/4" bolt in dump tab.	$210	$365
	Hydraulics with Controls		
HYDVAL	Reservoir and valve bank only-no controls	$1,310	$1,340
HYDA2	Reservoir and valve bank with two section air controls for fixed hook height	$1,450	$1,470
HYDC2-96	Reservoir and valve bank with two section cable controls for fixed hook height-96"	$1,450	$1,470
HYDC2-144	Reservoir and valve bank with two section extended controls for fixed hook height-144" for extended cab or cabover	$1,510	$1,540
HYDC2-192	Reservoir and valve bank with two section extended controls for fixed hook height-192" for crew cab or cabover	$1,550	$1,580
	Standard Hooklift Additions		
POTBL	Paint other than standard black	$390	NA
SH34PSS	Stainless steel pins in lieu of zinc plated pins, for heavy salt type enviroment.	$1,240	NA
	PTOs		
1599	PTO, standard cable-control for manual transmission	$715	$1,010
5355	PTO, air shift	$785	$1,240
15685	PTO, hot shift for automatic transmission for chassis larger than F550	$1,870	$2,190
	Pumps		
76705	Hydraulic Pump, 3.84 CID piston Hydro Leduc w/ 2" suction and pressure fittings.	$1,310	$1,710
	Fenders		
58217	Poly Fender Assemblies for Tandem Axles with Mounting Brackets	$1,130	$1,790
46122	Tandem Axle Steel Fender Assemblies with Mounting Brackets	$1,100	$1,790
21132	Aluminum fenders for tandem axle, 1/8" smooth, with mounting brackets	$1,400	$1,970
	Mudflaps		

Stellar Industries, Inc.
190 State Street • Garner, IA 50438
800-321-3741 • www.stellarindustries.com

Stellar® Shuttle Hooklift Price Sheet

34,000 Lbs Capacity

Part#	Description	List Price	Install Price
19494	One pair Stellar mud flaps with mounting bolts (included in factory installation)	$55	NA
	Bumpers		
61729	ICC Bumper w/ Lights (Tarper Application)	$400	$815
5407	Heavy duty rectangular tubing bumper. LED light kit (FMVSS108 compliant) and backup alarm is included. Must be used on 25,000 # GVWR or greater chassis. Will not work on 19,500# GVWR chassis. Stellar AutoTarper ready.	$1,240	$1,580
61363	Bumper, reinforced to accept pintle hitch 90K. (pintle not included). LED light kit (FMVSS108 compliant) and backup alarm is included. Stellar AutoTarper ready.	$1,800	$2,150
47154	Manually-operated fold out single pivot rear bumper with 90K pintle plate. Extends bumper an additional 19" past the rear of truck when a long body is loaded. Provides for up to 42" allowable overhang	$2,020	$2,420
	Pintle Hitches		
7406	PH-200 (non-air operated) pintle hitch 90000# max. gross tongue weight	$540	$685
8009	PH-200 air operated pintle hitch, 18000# vertical load, 90000# max. gross tongue weight	$630	$810
	ICC Safety Kit		
5305	ICC safety kit consisting of rechargeable fire extinguisher and reflector kit	$135	$160
	Toolboxes		
8480	Steel underbody toolbox with overhead door. Dimensions are 20"H x 45"L x 22" D. Features stainless steel automotive-type two-stage latches. Includes mounting brackets. Painted gloss black	$920	$1,030
10401	Steel underbody toolbox with overhead door. Dimensions are 18"H x 36"L x 18"D. Features stainless steel automotive-type two-stage latches and stainless steel hinges. Includes mounting brackets. Painted gloss black	$890	$1,140
10402	Steel underbody toolbox with overhead door. Dimensions are 20"H x 58"L x 22"D. Features stainless steel automotive-type two-stage latches and stainless steel hinges. Includes mounting brackets. Painted gloss black	$1,090	$1,350
	Floodlights		
74311	LED Flood Light Assembly	$85	$105
	Trailer Plugs		
22872	Trailer plug - 7 pin round	$95	$225
22876	Trailer plug - 7-pin (flat)	$95	$225
	Service and Emergency		
37733	Service and emergency gladhands with dummies and mounting bracket	$115	$210

Stellar Industries, Inc.
190 State Street • Garner, IA 50438
800-321-3741 • www.stellarindustries.com

Stellar® Shuttle Hooklift Price Sheet

34,000 Lbs Capacity

Part#	Description	List Price	Install Price
34341	Install customer-supplied gladhands	NA	$160

Note: Any new or used chassis received by Stellar Industries for upfit is subject to additional charges based on time and material to allow for proper installation of Stellar® Products on chassis.

Stellar Industries, Inc.
190 State Street • Garner, IA 50438
800-321-3741 • www.stellarindustries.com

Stellar® Shuttle Hooklift Price Sheet

40,000 Lbs Capacity

Part#	Description	List Price	Install Price
Note: Hooklift only with mounting kit. Select hydraulics, including reservoir, from list below. Hooklifts hydraulic requirements are 20gpm @ 4200 psi maximum. Hydraulic Pump not included in base hooklift. Select from list below.			
SH40-108	Stellar Shuttle 108-14-40, designed for 102" to 108"CT chassis. Body lengths 13' - 16'; up to 17' flatbed. Shipping weight approx. 3950lb.	$22,660	$27,300
SH40-138	Stellar Shuttle 138-18-40, designed for 130" to 144" CT chassis. Body lengths 15' - 18'; up to 19' flatbed. Shipping weight approx. 4000 lbs.	$23,690	$28,350
SH40-174	Stellar Shuttle 174-20-40, designed for 160" to 174"CT chassis. Body lengths 18 - 20'; up to 22' flatbed. Shipping weight approx. 4800lb.	$25,340	$30,030
SH40-190	Stellar Shuttle 190-24-40, designed for 174" to 190"CT chassis. Body lengths 19' - 22'; up to 24' flatbed. Shipping weight approx. 5250lb.	$27,300	$32,030
	Tab Alarms		
SH40TA1	Tab alarm (tilt/dump) kit. Audible alarm to alert operator that he has operated hooklift out of sequence and needs to replace 1/4" bolt in dump tab.	$210	$365
	Hydraulics with Controls		
HYDVAL	Reservoir and valve bank only-no controls	$1,310	$1,340
HYDA2	Reservoir and valve bank with two section air controls for fixed hook height	$1,450	$1,470
HYDC2-96	Reservoir and valve bank with two section cable controls for fixed hook height-96"	$1,450	$1,470
HYDC2-144	Reservoir and valve bank with two section extended controls for fixed hook height-144" for extended cab or cabover	$1,510	$1,540
HYDC2-192	Reservoir and valve bank with two section extended controls for fixed hook height-192" for crew cab or cabover	$1,550	$1,580
	Standard Hooklift Additions		
SH40R2	Double rear rollers	$1,180	NA
POTBL	Paint other than standard black	$390	NA
SH40PSS	Stainless steel pins in lieu of zinc plated pins, for heavy salt type enviroment.	$1,240	NA
	PTOs		
1599	PTO, standard cable-control for manual transmission	$715	$1,010
5355	PTO, air shift	$785	$1,240
15685	PTO, hot shift for automatic transmission for chassis larger than F550	$1,870	$2,190
	Pumps		
76705	Hydraulic Pump, 3.84 CID piston Hydro Leduc w/ 2" suction and pressure fittings.	$1,310	$1,710
	Fenders		

Stellar Industries, Inc.
190 State Street • Garner, IA 50438
800-321-3741 • www.stellarindustries.com

Stellar® Shuttle Hooklift Price Sheet

40,000 Lbs Capacity

Part#	Description	List Price	Install Price
58217	Poly Fender Assemblies for Tandem Axles with Mounting Brackets	$1,130	$1,790
46122	Tandem Axle Steel Fender Assemblies with Mounting Brackets	$1,100	$1,790
21132	Aluminum fenders for tandem axle, 1/8" smooth, with mounting brackets	$1,400	$1,970
	Mudflaps		
19494	One pair Stellar mud flaps with mounting bolts (included in factory installation)	$55	NA
	Bumpers		
61729	ICC Bumper w/ Lights (Tarper Application)	$400	$815
5407	Heavy duty rectangular tubing bumper. LED light kit (FMVSS108 compliant) and backup alarm is included. Must be used on 25,000 # GVWR or greater chassis. Will not work on 19,500# GVWR chassis. Stellar AutoTarper ready.	$1,240	$1,580
61363	Bumper, reinforced to accept pintle hitch 90K. (pintle not included). LED light kit (FMVSS108 compliant) and backup alarm is included. Stellar AutoTarper ready.	$1,800	$2,150
47154	Manually-operated fold out single pivot rear bumper with 90K pintle plate. Extends bumper an additional 19" past the rear of truck when a long body is loaded. Provides for up to 42" allowable overhang	$2,020	$2,420
	Pintle Hitches		
7406	PH-200 (non-air operated) pintle hitch 90000# max. gross tongue weight	$540	$685
8009	PH-200 air operated pintle hitch, 18000# vertical load, 90000# max. gross tongue weight	$630	$810
	Tarpers		
Note: The following Stellar® Auto Tarper only works with models 174-20-40 and 190-24-40			
81911	Tarper Assembly SIAT GEN2 for Use with Hooklift	$8,030	$11,130
45337	White mesh tarp for hooklift applications. Must choose this tarp when using with hooklifts.	$370	NA
	ICC Safety Kit		
5305	ICC safety kit consisting of rechargeable fire extinguisher and reflector kit	$135	$160
	Toolboxes		
8480	Steel underbody toolbox with overhead door. Dimensions are 20"H x 45"L x 22" D. Features stainless steel automotive-type two-stage latches. Includes mounting brackets. Painted gloss black	$920	$1,030
10401	Steel underbody toolbox with overhead door. Dimensions are 18"H x 36"L x 18"D. Features stainless steel automotive-type two-stage latches and stainless steel hinges. Includes mounting brackets. Painted gloss black	$890	$1,140

Stellar Industries, Inc.
190 State Street • Garner, IA 50438
800-321-3741 • www.stellarindustries.com

Stellar® Shuttle Hooklift Price Sheet

40,000 Lbs Capacity

Part#	Description	List Price	Install Price
10402	Steel underbody toolbox with overhead door. Dimensions are 20"H x 58"L x 22"D. Features stainless steel automotive-type two-stage latches and stainless steel hinges. Includes mounting brackets. Painted gloss black	$1,090	$1,350
	Floodlights		
74311	LED Flood Light Assembly	$85	$105
	Trailer Plugs		
22872	Trailer plug - 7 pin round	$95	$225
22876	Trailer plug - 7-pin (flat)	$95	$225
	Service and Emergency		
37733	Service and emergency gladhands with dummies and mounting bracket	$115	$210
34341	Install customer-supplied gladhands	NA	$160

Note: Any new or used chassis received by Stellar Industries for upfit is subject to additional charges based on time and material to allow for proper installation of Stellar® Products on chassis.

Stellar Industries, Inc.
190 State Street • Garner, IA 50438
800-321-3741 • www.stellarindustries.com

Stellar® Shuttle Hooklift Price Sheet

52,000 Lbs Capacity

Part#	Description	List Price	Install Price
Note: Hooklift only with mounting kit. Select hydraulics, including reservoir, from list below. Hooklifts hydraulic requirements are 20gpm @ 4200 psi maximum. Hydraulic Pump not included in base hooklift. Select from list below.			
SH52-138	Stellar Shuttle 138-18-52, designed for 130" to 144" CT chassis. Body lengths 15'-16' containers; up to 19' flatbed. Shipping weight approx. 5200lb.	$28,430	$33,920
SH52-174	Stellar Shuttle 174-20-52, designed for 160" to 174"CT chassis. Body lengths 18'-20'; up to 22' flatbed. Shipping weight approx. 5400lb.	$29,670	$35,180
SH52-190	Stellar Shuttle 190-24-52, designed for 174" to 190"CT chassis. Body lengths 19'-22'; up to 24' flatbed. Shipping weight approx. 6000lb.	$31,010	$36,540
	Tab Alarms		
SH52TA1	Tab alarm (tilt/dump) kit. Audible alarm to alert operator that he has operated hooklift out of sequence and needs to replace 1/4" bolt in dump tab.	$210	$365
	Hydraulics with Controls		
HYDVAL	Reservoir and valve bank only-no controls	$1,310	$1,340
HYDA2	Reservoir and valve bank with two section air controls for fixed hook height	$1,450	$1,470
HYDC2-96	Reservoir and valve bank with two section cable controls for fixed hook height-96"	$1,450	$1,470
HYDC2-144	Reservoir and valve bank with two section extended controls for fixed hook height-144" for extended cab or cabover	$1,510	$1,540
HYDC2-192	Reservoir and valve bank with two section extended controls for fixed hook height-192" for crew cab or cabover	$1,550	$1,580
	Standard Hooklift Additions		
SH52R2	Double rear rollers	$1,180	NA
POTBL	Paint other than standard black	$390	NA
SH52PSS	Stainless steel pins in lieu of zinc plated pins, for heavy salt type enviroment.	$1,240	NA
	PTOs		
1599	PTO, standard cable-control for manual transmission	$715	$1,010
5355	PTO, air shift	$785	$1,240
15685	PTO, hot shift for automatic transmission for chassis larger than F550	$1,870	$2,190
	Pumps		
76705	Hydraulic Pump, 3.84 CID piston Hydro Leduc w/ 2" suction and pressure fittings.	$1,310	$1,710
	Fenders		
58217	Poly Fender Assemblies for Tandem Axles with Mounting Brackets	$1,130	$1,790

Stellar Industries, Inc.
190 State Street • Garner, IA 50438
800-321-3741 • www.stellarindustries.com

Stellar® Shuttle Hooklift Price Sheet

52,000 Lbs Capacity

Part#	Description	List Price	Install Price
64058	Tri-axle Poly Fender Assemblies with Mounting Brackets, Consists of Two (2) Tandem and Two (2) Single Axle Steel Fenders	$1,240	$1,890
46122	Tandem Axle Steel Fender Assemblies with Mounting Brackets	$1,100	$1,790
46645	Tri-axle steel fenders with mounting brackets. Consists of (2)tandem and (2) single axle steel fenders	$1,860	$2,530
21132	Aluminum fenders for tandem axle, 1/8" smooth, with mounting brackets	$1,400	$1,970
	Mudflaps		
19494	One pair Stellar mud flaps with mounting bolts (included in factory installation)	$55	NA
	Bumpers		
61729	ICC Bumper w/ Lights (Tarper Application)	$400	$815
5407	Heavy duty rectangular tubing bumper. LED light kit (FMVSS108 compliant) and backup alarm is included. Must be used on 25,000 # GVWR or greater chassis. Will not work on 19,500# GVWR chassis. Stellar AutoTarper ready.	$1,240	$1,580
61363	Bumper, reinforced to accept pintle hitch 90K. (pintle not included). LED light kit (FMVSS108 compliant) and backup alarm is included. Stellar AutoTarper ready.	$1,800	$2,150
47154	Manually-operated fold out single pivot rear bumper with 90K pintle plate. Extends bumper an additional 19" past the rear of truck when a long body is loaded. Provides for up to 42" allowable overhang	$2,020	$2,420
	Pintle Hitches		
7406	PH-200 (non-air operated) pintle hitch 90000# max. gross tongue weight	$540	$685
8009	PH-200 air operated pintle hitch, 18000# vertical load, 90000# max. gross tongue weight	$630	$810
	Tarpers		
Note: The following Stellar® Auto Tarper only works with models 174-20-52 and 190-24-52			
81911	Tarper Assembly SIAT GEN2 for Use with Hooklift	$8,030	$11,130
45337	White mesh tarp for hooklift applications. Must choose this tarp when using with hooklifts.	$370	NA
	ICC Safety Kit		
5305	ICC safety kit consisting of rechargeable fire extinguisher and reflector kit	$135	$160
	Toolboxes		
8480	Steel underbody toolbox with overhead door. Dimensions are 20"H x 45"L x 22" D. Features stainless steel automotive-type two-stage latches. Includes mounting brackets. Painted gloss black	$920	$1,030

Stellar Industries, Inc.
190 State Street • Garner, IA 50438
800-321-3741 • www.stellarindustries.com

Stellar® Shuttle Hooklift Price Sheet

52,000 Lbs Capacity

Part#	Description	List Price	Install Price
10401	Steel underbody toolbox with overhead door. Dimensions are 18"H x 36"L x 18"D. Features stainless steel automotive-type two-stage latches and stainless steel hinges. Includes mounting brackets. Painted gloss black	$890	$1,140
10402	Steel underbody toolbox with overhead door. Dimensions are 20"H x 58"L x 22"D. Features stainless steel automotive-type two-stage latches and stainless steel hinges. Includes mounting brackets. Painted gloss black	$1,090	$1,350
	Floodlights		
74311	LED Flood Light Assembly	$85	$105
	Trailer Plugs		
22872	Trailer plug - 7 pin round	$95	$225
22876	Trailer plug - 7-pin (flat)	$95	$225
	Service and Emergency		
37733	Service and emergency gladhands with dummies and mounting bracket	$115	$210
34341	Install customer-supplied gladhands	NA	$160

Note: Any new or used chassis received by Stellar Industries for upfit is subject to additional charges based on time and material to allow for proper installation of Stellar® Products on chassis.

Stellar Industries, Inc.
190 State Street • Garner, IA 50438
800-321-3741 • www.stellarindustries.com

Stellar® Shuttle Hooklift Price Sheet

65,000 Lbs Capacity

Part#	Description	List Price	Install Price
Note: Hooklift only with mounting kit. Select hydraulics, including reservoir, from list below. Hooklifts hydraulic requirements are 25gpm @ 4200 psi maximum. Hydraulic Pump not included in base hooklift. Select from list below.			
SH65-138	Stellar Shuttle 138-18-65, designed for 138" to 144" CT chassis. Body lengths 15'-17' containers; up to 18' flatbed. Shipping weight approx. 6300lb.	$35,440	$41,160
SH65-174	Stellar Shuttle 174-20-65, designed for 160" to 174" CT chassis. Body lengths 18'-20' containers; up to 22' flatbed. Shipping weight approx. 6800lb.	$37,600	$43,370
SH65-190	Stellar Shuttle 190-24-65, designed for 174" to 190" CT chassis. Body lengths 20'-22' containers; up to 24' flatbed. Shipping weight approx. 7300lb.	$39,040	$44,840
	Hydraulics with Controls		
HYDVAL	Reservoir and valve bank only-no controls	$1,310	$1,340
HYDA2	Reservoir and valve bank with two section air controls for fixed hook height	$1,450	$1,470
HYDC2-96	Reservoir and valve bank with two section cable controls for fixed hook height-96"	$1,450	$1,470
HYDC2-144	Reservoir and valve bank with two section extended controls for fixed hook height-144" for extended cab or cabover	$1,510	$1,540
HYDC2-192	Reservoir and valve bank with two section extended controls for fixed hook height-192" for crew cab or cabover	$1,550	$1,580
	Standard Hooklift Additions		
POTBL	Paint other than standard black	$390	NA
SS PINS	Stainless steel pins in lieu of zinc plated pins, for heavy salt type enviroment. CONSULT FACTORY	$1,240	NA
	PTOs		
1599	PTO, standard cable-control for manual transmission	$715	$1,010
5355	PTO, air shift	$785	$1,240
15685	PTO, hot shift for automatic transmission for chassis larger than F550	$1,870	$2,190
	Pumps		
76705	Hydraulic Pump, 3.84 CID piston Hydro Leduc w/ 2" suction and pressure fittings.	$1,310	$1,710
	Fenders		
58217	Poly Fender Assemblies for Tandem Axles with Mounting Brackets	$1,130	$1,790
64058	Tri-axle Poly Fender Assemblies with Mounting Brackets, Consists of Two (2) Tandem and Two (2) Single Axle Steel Fenders	$1,240	$1,890
46122	Tandem Axle Steel Fender Assemblies with Mounting Brackets	$1,100	$1,790
46645	Tri-axle steel fenders with mounting brackets. Consists of (2)tandem and (2) single axle steel fenders	$1,860	$2,530

Stellar Industries, Inc.
190 State Street • Garner, IA 50438
800-321-3741 • www.stellarindustries.com

Stellar® Shuttle Hooklift Price Sheet

65,000 Lbs Capacity

Part#	Description	List Price	Install Price
21132	Aluminum fenders for tandem axle, 1/8" smooth, with mounting brackets	$1,400	$1,970
	Mudflaps		
19494	One pair Stellar mud flaps with mounting bolts (included in factory installation)	$55	NA
	Bumpers		
61729	ICC Bumper w/ Lights (Tarper Application)	$400	$815
5407	Heavy duty rectangular tubing bumper. LED light kit (FMVSS108 compliant) and backup alarm is included. Must be used on 25,000 # GVWR or greater chassis. Will not work on 19,500# GVWR chassis. Stellar AutoTarper ready.	$1,240	$1,580
61363	Bumper, reinforced to accept pintle hitch 90K. (pintle not included). LED light kit (FMVSS108 compliant) and backup alarm is included. Stellar AutoTarper ready.	$1,800	$2,150
47154	Manually-operated fold out single pivot rear bumper with 90K pintle plate. Extends bumper an additional 19" past the rear of truck when a long body is loaded. Provides for up to 42" allowable overhang	$2,020	$2,420
	Pintle Hitches		
7406	PH-200 (non-air operated) pintle hitch 90000# max. gross tongue weight	$540	$685
8009	PH-200 air operated pintle hitch, 18000# vertical load, 90000# max. gross tongue weight	$630	$810
	Tarpers		
Note: The following Stellar® Auto Tarper only works with models 174-20-65 and 190-24-65			
81911	Tarper Assembly SIAT GEN2 for Use with Hooklift	$8,030	$11,130
45337	White mesh tarp for hooklift applications. Must choose this tarp when using with hooklifts.	$370	NA
	ICC Safety Kit		
5305	ICC safety kit consisting of rechargeable fire extinguisher and reflector kit	$135	$160
	Toolboxes		
8480	Steel underbody toolbox with overhead door. Dimensions are 20"H x 45"L x 22" D. Features stainless steel automotive-type two-stage latches. Includes mounting brackets. Painted gloss black	$920	$1,030
10401	Steel underbody toolbox with overhead door. Dimensions are 18"H x 36"L x 18"D. Features stainless steel automotive-type two-stage latches and stainless steel hinges. Includes mounting brackets. Painted gloss black	$890	$1,140
10402	Steel underbody toolbox with overhead door. Dimensions are 20"H x 58"L x 22"D. Features stainless steel automotive-type two-stage latches and stainless steel hinges. Includes mounting brackets. Painted gloss black	$1,090	$1,350

Stellar Industries, Inc.
190 State Street • Garner, IA 50438
800-321-3741 • www.stellarindustries.com

Stellar® Shuttle Hooklift Price Sheet

65,000 Lbs Capacity

Part#	Description	List Price	Install Price
	Floodlights		
74311	LED Flood Light Assembly	$85	$105
	Trailer Plugs		
22872	Trailer plug - 7 pin round	$95	$225
22876	Trailer plug - 7-pin (flat)	$95	$225
	Service and Emergency		
37733	Service and emergency gladhands with dummies and mounting bracket	$115	$210
34341	Install customer-supplied gladhands	NA	$160

Note: Any new or used chassis received by Stellar Industries for upfit is subject to additional charges based on time and material to allow for proper installation of Stellar® Products on chassis.

Stellar Industries, Inc.
190 State Street • Garner, IA 50438
800-321-3741 • www.stellarindustries.com

Stellar® Slider20 Hooklift Price Sheet

20,000 Lbs Capacity

Part#	Description	List Price	Install Price
Note: Hooklift only with mounting kit. Select hydraulics, including reservoir, from list below. Outside latches included in base hooklift. Hooklifts hydraulic requirements are 20gpm @ 4200 psi maximum. Hydraulic Pump not included in base hooklift. Select from list below.			
SL20HH54	Stellar Slider20, 54" hook height. Designed for 138" to 156" CA chassis. Body lengths 13' - 18'; up to 20' flatbeds. Shipping weight approx. 3500 lb.	$20,300	$23,840
SL20HH62	Stellar Slider20, 62" hook height. Designed for 138" to 156" CA chassis. Body lengths 13' - 18'; up to 20' flatbeds. Shipping weight approx. 3600 lb.	$20,300	$23,840
SL20HH5462	Stellar Slider20, 54"-62" adjustable hook height. Designed for 138" to 156" CA chassis. Body lengths 13' - 18'; up to 20' flatbeds. Shipping weight approx. 3700 lb.	$22,770	$26,360
	Hydraulics with Controls		
HYD10VAL	Reservoir and valve bank only-no controls	$865	NA
HYD10A2	Reservoir and valve bank with air controls-2 section	$1,740	$1,770
HYD10C2-96	Reservoir and valve bank with cable controls-96"	$1,010	$1,030
HYD10C2-144	Reservoir and valve bank with extended cable controls- 144" of extended cab or cabover	$1,060	$1,080
HYD10C2-192	Reservoir and valve bank with extended cable controls- 192" of crew cab or cabover	$1,240	$1,260
HYD10C3-96	Reservoir and valve bank for cable controls-96" three section	$1,010	$1,030
HYD10C3-144	Reservoir and valve bank for cable controls-144" three section for extended cab and cabover	$1,060	$1,080
HYD10C3-192	Reservoir and valve bank for cable controls-192" three section for crew cab and cabover	$1,240	$1,260
HYD10A3	Reservoir and valve bank for air controls-3 section	$2,100	$2,420
	Standard Hooklift Additions		
POTBL	Paint other than standard black	$390	NA
SL20PSS	Stainless steel pins in lieu of zinc plated pins, for heavy salt type enviroment.	$1,240	NA
	PTOs		
1599	PTO, standard cable-control for manual transmission	$715	$1,010
5355	PTO, air shift	$785	$1,240
15685	PTO, hot shift for automatic transmission for chassis larger than F550	$1,870	$2,190
	Pumps		
56432	Hydraulic pump for chassis above 19,500# GVW. Use with Dodge and IH chassis.	$1,030	$1,330
	Fenders		

Stellar Industries, Inc.
190 State Street • Garner, IA 50438
800-321-3741 • www.stellarindustries.com

Stellar® Slider20 Hooklift Price Sheet

20,000 Lbs Capacity

Part#	Description	List Price	Install Price
6170	One pair poly fenders for 20,000 to 28,000# GVWR chassis with 22.5 wheels, includes fender brackets, mounting hardware. Mud flaps included with factory installation only	$585	$910
58217	Poly Fender Assemblies for Tandem Axles with Mounting Brackets	$1,130	$1,790
46299	One pair steel fenders for 20,000 to 28,000# GVWR chassis with 22.5 wheels, includes fender brackets, mounting hardware. Mud flaps included with factory installation only	$940	$1,250
66325	FENDER ASM AL SMOOTH LOW-PRO	$670	NA
	Mudflaps		
19494	One pair Stellar mud flaps with mounting bolts (included in factory installation)	$55	NA
	Bumpers		
61729	ICC Bumper w/ Lights (Tarper Application)	$400	$815
5407	Heavy duty rectangular tubing bumper. LED light kit (FMVSS108 compliant) and backup alarm is included. Must be used on 25,000 # GVWR or greater chassis. Will not work on 19,500# GVWR chassis. Stellar AutoTarper ready.	$1,240	$1,580
17441	Bumper, reinforced to accept pintle hitch 30K (pintle hitch is not included). LED light kit (FMVSS108 compliant) and backup alarm is included. Stellar AutoTarper ready	$1,660	$1,960
31920	Manually-operated fold out single pivot rear bumper with 30K pintle plate. Extends bumper an additional 19" past the rear of truck when a long body is loaded. Provides for up to 42" allowable overhang	$1,940	$2,280
	Pintle Hitches		
57952	Pintle Hitch - 30,000 lb	$190	$330
	ICC Safety Kit		
5305	ICC safety kit consisting of rechargeable fire extinguisher and reflector kit	$135	$160
	Toolboxes		
10401	Steel underbody toolbox with overhead door. Dimensions are 18"H x 36"L x 18"D. Features stainless steel automotive-type two-stage latches and stainless steel hinges. Includes mounting brackets. Painted gloss black	$890	$1,140
8480	Steel underbody toolbox with overhead door. Dimensions are 20"H x 45"L x 22" D. Features stainless steel automotive-type two-stage latches. Includes mounting brackets. Painted gloss black	$920	$1,030
10402	Steel underbody toolbox with overhead door. Dimensions are 20"H x 58"L x 22"D. Features stainless steel automotive-type two-stage latches and stainless steel hinges. Includes mounting brackets. Painted gloss black	$1,090	$1,350
	Floodlights		

Stellar Industries, Inc.
190 State Street • Garner, IA 50438
800-321-3741 • www.stellarindustries.com

Stellar® Slider20 Hooklift Price Sheet

20,000 Lbs Capacity

Part#	Description	List Price	Install Price
74311	LED Flood Light Assembly	$85	$105
	Trailer Plugs		
22876	Trailer plug - 7-pin (flat)	$95	$225
22872	Trailer plug - 7 pin round	$95	$225
	Service and Emergency		
37733	Service and emergency gladhands with dummies and mounting bracket	$115	$210
34341	Install customer-supplied gladhands	NA	$160

Note: Any new or used chassis received by Stellar Industries for upfit is subject to additional charges based on time and material to allow for proper installation of Stellar® Products on chassis.

Stellar Industries, Inc.
190 State Street • Garner, IA 50438
800-321-3741 • www.stellarindustries.com

Stellar® Slider20-S Hooklift Price Sheet

20,000 Lbs Capacity

Part#	Description	List Price	Install Price
Note: Hooklift only with mounting kit. Select hydraulics, including reservoir, from list below. There are no latches in base hooklift. Hooklifts hydraulic requirements are 20gpm @ 4200 psi maximum. Hydraulic Pump not included in base hooklift. Select from list below.			
SL20SHH36	Stellar Slider20, 36" hook height, designed for 120" CA chassis. Body lengths 10' - 14'; up to 16' flatbeds. Shipping weight approx. 3850 lb.	$16,480	$19,950
SL20SHH54	Stellar Slider20, 54" hook height, designed for 120" CA chassis. Body lengths 10' - 14'; up to 16' flatbeds. Shipping weight approx. 4000 lb.	$16,480	$19,950
SL20SHH3654	Stellar Slider20, 36-54" adjustable hook height, designed for 120" CA chassis. Body lengths 10' - 14'; up to 16' flatbeds. Shipping weight approx. 4200lb.	$20,500	$24,050
	Body Latches		
SL26BLIS	Inside body latches-bolt on (54216)	$200	NA
SL26BLOS	Outside body latches-bolt on (55358)	$370	NA
	Hydraulics with Controls		
HYDVAL	Reservoir and valve bank only-no controls	$1,310	$1,340
HYDC2-96	Reservoir and valve bank with two section cable controls for fixed hook height-96"	$1,450	$1,470
HYDC2-144	Reservoir and valve bank with two section extended controls for fixed hook height-144" for extended cab or cabover	$1,510	$1,540
HYDC2-192	Reservoir and valve bank with two section extended controls for fixed hook height-192" for crew cab or cabover	$1,550	$1,580
HYDA2	Reservoir and valve bank with two section air controls for fixed hook height	$1,450	$1,470
HYDC3-96	Reservoir and valve bank with three section cable controls for adjustable hook height-96"	$1,450	$1,470
HYDC3-144	Reservoir and valve bank with three section cable controls-144" for extended cab and cabover	$1,510	$1,540
HYDC3-192	Reservoir and valve bank with three section cable controls for adjustable hook height-192" for crew cab or cabover	$1,550	$1,580
HYDA3	Reservoir and valve bank with three section air controls for adjustable hook height	$1,820	$1,850
	Standard Hooklift Additions		
POTBL	Paint other than standard black	$390	NA
SL20SPSS	Stainless steel pins in lieu of zinc plated pins, for heavy salt type enviroment.	$1,240	NA
	PTOs		
1599	PTO, standard cable-control for manual transmission	$715	$1,010
5355	PTO, air shift	$785	$1,240
15685	PTO, hot shift for automatic transmission for chassis larger than F550	$1,870	$2,190

Stellar Industries, Inc.
190 State Street • Garner, IA 50438
800-321-3741 • www.stellarindustries.com

Stellar® Slider20-S Hooklift Price Sheet

20,000 Lbs Capacity

Part#	Description	List Price	Install Price
	Pumps		
76705	Hydraulic Pump, 3.84 CID piston Hydro Leduc w/ 2" suction and pressure fittings.	$1,310	$1,710
	Fenders		
6170	One pair poly fenders for 20,000 to 28,000# GVWR chassis with 22.5 wheels, includes fender brackets, mounting hardware. Mud flaps included with factory installation only	$585	$910
58217	Poly Fender Assemblies for Tandem Axles with Mounting Brackets	$1,130	$1,790
46299	One pair steel fenders for 20,000 to 28,000# GVWR chassis with 22.5 wheels, includes fender brackets, mounting hardware. Mud flaps included with factory installation only	$940	$1,250
66325	FENDER ASM AL SMOOTH LOW-PRO	$670	NA
	Mudflaps		
19494	One pair Stellar mud flaps with mounting bolts (included in factory installation)	$55	NA
	Bumpers		
61729	ICC Bumper w/ Lights (Tarper Application)	$400	$815
5407	Heavy duty rectangular tubing bumper. LED light kit (FMVSS108 compliant) and backup alarm is included. Must be used on 25,000 # GVWR or greater chassis. Will not work on 19,500# GVWR chassis. Stellar AutoTarper ready.	$1,240	$1,580
17441	Bumper, reinforced to accept pintle hitch 30K (pintle hitch is not included). LED light kit (FMVSS108 compliant) and backup alarm is included. Stellar AutoTarper ready	$1,660	$1,960
31920	Manually-operated fold out single pivot rear bumper with 30K pintle plate. Extends bumper an additional 19" past the rear of truck when a long body is loaded. Provides for up to 42" allowable overhang	$1,940	$2,280
	Pintle Hitches		
57952	Pintle Hitch - 30,000 lb	$190	$330
	ICC Safety Kit		
5305	ICC safety kit consisting of rechargeable fire extinguisher and reflector kit	$135	$160
	Toolboxes		
10401	Steel underbody toolbox with overhead door. Dimensions are 18"H x 36"L x 18"D. Features stainless steel automotive-type two-stage latches and stainless steel hinges. Includes mounting brackets. Painted gloss black	$890	$1,140

Stellar Industries, Inc.
190 State Street • Garner, IA 50438
800-321-3741 • www.stellarindustries.com

Stellar® Slider20-S Hooklift Price Sheet

20,000 Lbs Capacity

Part#	Description	List Price	Install Price
8480	Steel underbody toolbox with overhead door. Dimensions are 20"H x 45"L x 22" D. Features stainless steel automotive-type two-stage latches. Includes mounting brackets. Painted gloss black	$920	$1,030
10402	Steel underbody toolbox with overhead door. Dimensions are 20"H x 58"L x 22"D. Features stainless steel automotive-type two-stage latches and stainless steel hinges. Includes mounting brackets. Painted gloss black	$1,090	$1,350
	Floodlights		
74311	LED Flood Light Assembly	$85	$105
	Trailer Plugs		
22876	Trailer plug - 7-pin (flat)	$95	$225
22872	Trailer plug - 7 pin round	$95	$225
	Service and Emergency		
37733	Service and emergency gladhands with dummies and mounting bracket	$115	$210
34341	Install customer-supplied gladhands	NA	$160

Note: Any new or used chassis received by Stellar Industries for upfit is subject to additional charges based on time and material to allow for proper installation of Stellar® Products on chassis.

Stellar Industries, Inc.
190 State Street • Garner, IA 50438
800-321-3741 • www.stellarindustries.com

Stellar® Slider26 Hooklift Price Sheet

26,000 Lbs Capacity

Part#	Description	List Price	Install Price

Note: Hooklift only with mounting kit. Select hydraulics, including reservoir, from list below. There are no latches in base hooklift. Hooklifts hydraulic requirements are 20gpm @ 3900 psi maximum.
Hydraulic Pump not included in base hooklift. Select from list below.

Hook Height Options

SL26HH36	Stellar Slider26, 36" hook height. Designed for 130" to 144" CA or 130" to 138" CT chassis. Body lengths 12' - 16'; up to 18' flatbeds. Shipping weight approx. 3200 lb.	$19,470	$23,310
SL26HH54	Stellar Slider26, 54" hook height. Designed for 130" to 144" CA or 130" to 138" CT chassis. Body lengths 12' - 16'; up to 18' flatbeds. Shipping weight approx. 3300 lb.	$19,880	$23,730
SL26HH62	Stellar Slider26, 62" hook height. Designed for 130" to 144" CA or 130" to 138" CT chassis. Body lengths 12' - 16'; up to 18' flatbeds. Shipping weight approx. 3400 lb.	$20,090	$23,940
SL26HH3654	Stellar Slider26, 36-54" adjustable hook height. Designed for 130" to 144" CA or 130" to 138" CT chassis. Body lengths 12' - 16'; up to 18' flatbeds. Shipping weight approx. 3500 lb.	$23,390	$27,300
SL26HH5462	Stellar Slider26, 54-62" adjustable hook height. Designed for 130" to 144" CA or 130" to 138" CT chassis. Body lengths 12' - 16'; up to 18' flatbeds. Shipping weight approx. 3600 lb.	$23,690	$27,620

Body Latches

SL26BLIS	Inside body latches-bolt on (54216)	$200	NA
SL26BLOS	Outside body latches-bolt on (55358)	$370	NA
62315	Extended inside locks for skids using pocket style hold downs at 96.5 inch location (not required for skid using flat bar hold down); dealer must install.	$685	NA

Hydraulics with Controls

HYDVAL	Reservoir and valve bank only-no controls	$1,310	$1,340
HYDC2-96	Reservoir and valve bank with two section cable controls for fixed hook height-96"	$1,450	$1,470
HYDC2-144	Reservoir and valve bank with two section extended controls for fixed hook height-144" for extended cab or cabover	$1,510	$1,540
HYDC2-192	Reservoir and valve bank with two section extended controls for fixed hook height-192" for crew cab or cabover	$1,550	$1,580
HYDA2	Reservoir and valve bank with two section air controls for fixed hook height	$1,450	$1,470
HYDC3-96	Reservoir and valve bank with three section cable controls for adjustable hook height-96"	$1,450	$1,470
HYDC3-144	Reservoir and valve bank with three section cable controls-144" for extended cab and cabover	$1,510	$1,540
HYDC3-192	Reservoir and valve bank with three section cable controls for adjustable hook height-192" for crew cab or cabover	$1,550	$1,580

Stellar Industries, Inc.
190 State Street • Garner, IA 50438
800-321-3741 • www.stellarindustries.com

Stellar® Slider26 Hooklift Price Sheet

26,000 Lbs Capacity

Part#	Description	List Price	Install Price
HYDA3	Reservoir and valve bank with three section air controls for adjustable hook height	$1,820	$1,850
	Standard Hooklift Additions		
SL26RF8	8" flange rear rollers-inside latches ONLY	$100	NA
SL26XRMB	Extra rollers - mid body.	$590	NA
SL26PSS	Stainless steel pins in leu of zinc	$1,240	NA
POTBL	Paint other than standard black	$390	NA
	PTOs		
1599	PTO, standard cable-control for manual transmission	$715	$1,010
5355	PTO, air shift	$785	$1,240
15685	PTO, hot shift for automatic transmission for chassis larger than F550	$1,870	$2,190
	Pumps		
76705	Hydraulic Pump, 3.84 CID piston Hydro Leduc w/ 2" suction and pressure fittings.	$1,310	$1,710
	Fenders		
6170	One pair poly fenders for 20,000 to 28,000# GVWR chassis with 22.5 wheels, includes fender brackets, mounting hardware. Mud flaps included with factory installation only	$585	$910
58217	Poly Fender Assemblies for Tandem Axles with Mounting Brackets	$1,130	$1,790
46299	One pair steel fenders for 20,000 to 28,000# GVWR chassis with 22.5 wheels, includes fender brackets, mounting hardware. Mud flaps included with factory installation only	$940	$1,250
66325	FENDER ASM AL SMOOTH LOW-PRO	$670	NA
	Mudflaps		
19494	One pair Stellar mud flaps with mounting bolts (included in factory installation)	$55	NA
	Bumpers		
61729	ICC Bumper w/ Lights (Tarper Application)	$400	$815
5407	Heavy duty rectangular tubing bumper. LED light kit (FMVSS108 compliant) and backup alarm is included. Must be used on 25,000 # GVWR or greater chassis. Will not work on 19,500# GVWR chassis. Stellar AutoTarper ready.	$1,240	$1,580
17441	Bumper, reinforced to accept pintle hitch 30K (pintle hitch is not included). LED light kit (FMVSS108 compliant) and backup alarm is included. Stellar AutoTarper ready	$1,660	$1,960

Stellar Industries, Inc.
190 State Street • Garner, IA 50438
800-321-3741 • www.stellarindustries.com

Stellar® Slider26 Hooklift Price Sheet

26,000 Lbs Capacity

Part#	Description	List Price	Install Price
31920	Manually-operated fold out single pivot rear bumper with 30K pintle plate. Extends bumper an additional 19" past the rear of truck when a long body is loaded. Provides for up to 42" allowable overhang	$1,940	$2,280
	Pintle Hitches		
57952	Pintle Hitch - 30,000 lb	$190	$330
	ICC Safety Kit		
5305	ICC safety kit consisting of rechargeable fire extinguisher and reflector kit	$135	$160
	Toolboxes		
10401	Steel underbody toolbox with overhead door. Dimensions are 18"H x 36"L x 18"D. Features stainless steel automotive-type two-stage latches and stainless steel hinges. Includes mounting brackets. Painted gloss black	$890	$1,140
8480	Steel underbody toolbox with overhead door. Dimensions are 20"H x 45"L x 22" D. Features stainless steel automotive-type two-stage latches. Includes mounting brackets. Painted gloss black	$920	$1,030
10402	Steel underbody toolbox with overhead door. Dimensions are 20"H x 58"L x 22"D. Features stainless steel automotive-type two-stage latches and stainless steel hinges. Includes mounting brackets. Painted gloss black	$1,090	$1,350
	Floodlights		
74311	LED Flood Light Assembly	$85	$105
	Trailer Plugs		
22876	Trailer plug - 7-pin (flat)	$95	$225
22872	Trailer plug - 7 pin round	$95	$225
	Service and Emergency		
37733	Service and emergency gladhands with dummies and mounting bracket	$115	$210
34341	Install customer-supplied gladhands	NA	$160

Note: Any new or used chassis received by Stellar Industries for upfit is subject to additional charges based on time and material to allow for proper installation of Stellar® Products on chassis.

Stellar Industries, Inc.
190 State Street • Garner, IA 50438
800-321-3741 • www.stellarindustries.com

Stellar® Slider34 Hooklift Price Sheet

34,000 Lbs Capacity

Part#	Description	List Price	Install Price
Note: Hooklift only with mounting kit. Select hydraulics, including reservoir, from list below. Hooklifts hydraulic requirements are 20gpm @ 4200 psi maximum. Hydraulic Pump not included in base hooklift. Select from list below.			
SL34HH54	Stellar Slider 34, 54" hook height, designed for 160" to 174" CT chassis. Body lengths 14'-20' containers; up to 22' flatbed. Shipping weight approx. 4300lb.	$25,450	$30,450
SL34HH62	Stellar Slider 34, 62" hook height, designed for 160" to 174" CT chassis. Body lengths 14'-20' containers; up to 22' flatbed. Shipping weight approx. 4300lb.	$25,450	$30,450
SL34HH5462	Stellar Slider 34, 54"-62"" hook height, designed for 160" to 174" CT chassis. Body lengths 14'-20' containers; up to 22' flatbed. Shipping weight approx. 4500lb.	$28,840	$33,920
	Hydraulics with Controls		
HYDVAL	Reservoir and valve bank only-no controls	$1,310	$1,340
HYDA2	Reservoir and valve bank with two section air controls for fixed hook height	$1,450	$1,470
HYDC2-96	Reservoir and valve bank with two section cable controls for fixed hook height-96"	$1,450	$1,470
HYDC2-144	Reservoir and valve bank with two section extended controls for fixed hook height-144" for extended cab or cabover	$1,510	$1,540
HYDC2-192	Reservoir and valve bank with two section extended controls for fixed hook height-192" for crew cab or cabover	$1,550	$1,580
HYDA3	Reservoir and valve bank with three section air controls for adjustable hook height	$1,820	$1,850
HYDC3-96	Reservoir and valve bank with three section cable controls for adjustable hook height-96"	$1,450	$1,470
HYDC3-144	Reservoir and valve bank with three section cable controls-144" for extended cab and cabover	$1,510	$1,540
HYDC3-192	Reservoir and valve bank with three section cable controls for adjustable hook height-192" for crew cab or cabover	$1,550	$1,580
	Standard Hooklift Additions		
POTBL	Paint other than standard black	$390	NA
SL34PSS	Stainless steel pins in lieu of zinc plated pins, for heavy salt type enviroment.	$1,240	NA
	PTOs		
1599	PTO, standard cable-control for manual transmission	$715	$1,010
5355	PTO, air shift	$785	$1,240
15685	PTO, hot shift for automatic transmission for chassis larger than F550	$1,870	$2,190
	Pumps		
76705	Hydraulic Pump, 3.84 CID piston Hydro Leduc w/ 2" suction and pressure fittings.	$1,310	$1,710

Stellar Industries, Inc.
190 State Street • Garner, IA 50438
800-321-3741 • www.stellarindustries.com

Stellar® Slider34 Hooklift Price Sheet

34,000 Lbs Capacity

Part#	Description	List Price	Install Price
	Fenders		
6170	One pair poly fenders for 20,000 to 28,000# GVWR chassis with 22.5 wheels, includes fender brackets, mounting hardware. Mud flaps included with factory installation only	$585	$910
58217	Poly Fender Assemblies for Tandem Axles with Mounting Brackets	$1,130	$1,790
64058	Tri-axle Poly Fender Assemblies with Mounting Brackets, Consists of Two (2) Tandem and Two (2) Single Axle Steel Fenders	$1,240	$1,890
46299	One pair steel fenders for 20,000 to 28,000# GVWR chassis with 22.5 wheels, includes fender brackets, mounting hardware. Mud flaps included with factory installation only	$940	$1,250
46122	Tandem Axle Steel Fender Assemblies with Mounting Brackets	$1,100	$1,790
46645	Tri-axle steel fenders with mounting brackets. Consists of (2)tandem and (2) single axle steel fenders	$1,860	$2,530
21132	Aluminum fenders for tandem axle, 1/8" smooth, with mounting brackets	$1,400	$1,970
	Mudflaps		
19494	One pair Stellar mud flaps with mounting bolts (included in factory installation)	$55	NA
	Bumpers		
61729	ICC Bumper w/ Lights (Tarper Application)	$400	$815
5407	Heavy duty rectangular tubing bumper. LED light kit (FMVSS108 compliant) and backup alarm is included. Must be used on 25,000 # GVWR or greater chassis. Will not work on 19,500# GVWR chassis. Stellar AutoTarper ready.	$1,240	$1,580
61363	Bumper, reinforced to accept pintle hitch 90K. (pintle not included). LED light kit (FMVSS108 compliant) and backup alarm is included. Stellar AutoTarper ready.	$1,800	$2,150
47154	Manually-operated fold out single pivot rear bumper with 90K pintle plate. Extends bumper an additional 19" past the rear of truck when a long body is loaded. Provides for up to 42" allowable overhang	$2,020	$2,420
	Pintle Hitches		
7406	PH-200 (non-air operated) pintle hitch 90000# max. gross tongue weight	$540	$685
8009	PH-200 air operated pintle hitch, 18000# vertical load, 90000# max. gross tongue weight	$630	$810
	ICC Safety Kit		
5305	ICC safety kit consisting of rechargeable fire extinguisher and reflector kit	$135	$160
	Toolboxes		

Stellar Industries, Inc.
190 State Street • Garner, IA 50438
800-321-3741 • www.stellarindustries.com

Stellar® Slider34 Hooklift Price Sheet

34,000 Lbs Capacity

Part#	Description	List Price	Install Price
10401	Steel underbody toolbox with overhead door. Dimensions are 18"H x 36"L x 18"D. Features stainless steel automotive-type two-stage latches and stainless steel hinges. Includes mounting brackets. Painted gloss black	$890	$1,140
8480	Steel underbody toolbox with overhead door. Dimensions are 20"H x 45"L x 22" D. Features stainless steel automotive-type two-stage latches. Includes mounting brackets. Painted gloss black	$920	$1,030
10402	Steel underbody toolbox with overhead door. Dimensions are 20"H x 58"L x 22"D. Features stainless steel automotive-type two-stage latches and stainless steel hinges. Includes mounting brackets. Painted gloss black	$1,090	$1,350
	Floodlights		
74311	LED Flood Light Assembly	$85	$105
	Trailer Plugs		
22872	Trailer plug - 7 pin round	$95	$225
22876	Trailer plug - 7-pin (flat)	$95	$225
	Service and Emergency		
37733	Service and emergency gladhands with dummies and mounting bracket	$115	$210
34341	Install customer-supplied gladhands	NA	$160

Note: Any new or used chassis received by Stellar Industries for upfit is subject to additional charges based on time and material to allow for proper installation of Stellar® Products on chassis.

Stellar Industries, Inc.
190 State Street • Garner, IA 50438
800-321-3741 • www.stellarindustries.com

Stellar® Slider40 Hooklift Price Sheet

40,000 Lbs Capacity

Part#	Description	List Price	Install Price
Note: Hooklift only with mounting kit. Select hydraulics, including reservoir, from list below. Hooklifts hydraulic requirements are 20gpm @ 4200 psi maximum. Hydraulic Pump not included in base hooklift. Select from list below.			
SL40HH54	Stellar Slider40, 54" hook height, designed for 130" to 144" CT chassis. Body lengths 12'-16' containers; up to 18' flatbed. Shipping weight approx. 4,200 lbs.	$23,180	$27,830
SL40HH62	Stellar Slider40, 62" hook height, designed for 130" to 144" CT chassis. Body lengths 12'-16' containers; up to 18' flatbed. Shipping weight approx. 4,250 lbs.	$23,180	$27,830
SL40HH5462	Stellar Slider40, 54"-62" adjustable hook height, designed for 130" to 144" CT chassis. Body lengths 12'-16' containers; up to 18' flatbed. Shipping weight approx. 4,550 lbs.	$26,680	$31,400
Body Latches			
SL40BLIS	Bolt on inside latches, per set	$200	NA
SL40BLOS	Bolt on outside latches, per set	$370	NA
Hydraulics with Controls			
HYDVAL	Reservoir and valve bank only-no controls	$1,310	$1,340
HYDC2-96	Reservoir and valve bank with two section cable controls for fixed hook height-96"	$1,450	$1,470
HYDC2-144	Reservoir and valve bank with two section extended controls for fixed hook height-144" for extended cab or cabover	$1,510	$1,540
HYDC2-192	Reservoir and valve bank with two section extended controls for fixed hook height-192" for crew cab or cabover	$1,550	$1,580
HYDC3-96	Reservoir and valve bank with three section cable controls for adjustable hook height-96"	$1,450	$1,470
HYDC3-144	Reservoir and valve bank with three section cable controls-144" for extended cab and cabover	$1,510	$1,540
HYDC3-192	Reservoir and valve bank with three section cable controls for adjustable hook height-192" for crew cab or cabover	$1,550	$1,580
HYDA2	Reservoir and valve bank with two section air controls for fixed hook height	$1,450	$1,470
HYDA3	Reservoir and valve bank with three section air controls for adjustable hook height	$1,820	$1,850
Standard Hooklift Additions			
POTBL	Paint other than standard black	$390	NA
SL40PSS	Stainless steel pins in lieu of zinc plated pins, for heavy salt type enviroment.	$1,240	NA
PTOs			
1599	PTO, standard cable-control for manual transmission	$715	$1,010

Stellar Industries, Inc.
190 State Street • Garner, IA 50438
800-321-3741 • www.stellarindustries.com

Stellar® Slider40 Hooklift Price Sheet

40,000 Lbs Capacity

Part#	Description	List Price	Install Price
5355	PTO, air shift	$785	$1,240
15685	PTO, hot shift for automatic transmission for chassis larger than F550	$1,870	$2,190
	Pumps		
76705	Hydraulic Pump, 3.84 CID piston Hydro Leduc w/ 2" suction and pressure fittings.	$1,310	$1,710
	Fenders		
58217	Poly Fender Assemblies for Tandem Axles with Mounting Brackets	$1,130	$1,790
46122	Tandem Axle Steel Fender Assemblies with Mounting Brackets	$1,100	$1,790
21132	Aluminum fenders for tandem axle, 1/8" smooth, with mounting brackets	$1,400	$1,970
	Mudflaps		
19494	One pair Stellar mud flaps with mounting bolts (included in factory installation)	$55	NA
	Bumpers		
61729	ICC Bumper w/ Lights (Tarper Application)	$400	$815
5407	Heavy duty rectangular tubing bumper. LED light kit (FMVSS108 compliant) and backup alarm is included. Must be used on 25,000 # GVWR or greater chassis. Will not work on 19,500# GVWR chassis. Stellar AutoTarper ready.	$1,240	$1,580
61363	Bumper, reinforced to accept pintle hitch 90K. (pintle not included). LED light kit (FMVSS108 compliant) and backup alarm is included. Stellar AutoTarper ready.	$1,800	$2,150
47154	Manually-operated fold out single pivot rear bumper with 90K pintle plate. Extends bumper an additional 19" past the rear of truck when a long body is loaded. Provides for up to 42" allowable overhang	$2,020	$2,420
	Pintle Hitches		
7406	PH-200 (non-air operated) pintle hitch 90000# max. gross tongue weight	$540	$685
8009	PH-200 air operated pintle hitch, 18000# vertical load, 90000# max. gross tongue weight	$630	$810
	ICC Safety Kit		
5305	ICC safety kit consisting of rechargeable fire extinguisher and reflector kit	$135	$160
	Toolboxes		
10401	Steel underbody toolbox with overhead door. Dimensions are 18"H x 36"L x 18"D. Features stainless steel automotive-type two-stage latches and stainless steel hinges. Includes mounting brackets. Painted gloss black	$890	$1,140

Stellar Industries, Inc.
190 State Street • Garner, IA 50438
800-321-3741 • www.stellarindustries.com

Stellar® Slider40 Hooklift Price Sheet

40,000 Lbs Capacity

Part#	Description	List Price	Install Price
8480	Steel underbody toolbox with overhead door. Dimensions are 20"H x 45"L x 22" D. Features stainless steel automotive-type two-stage latches. Includes mounting brackets. Painted gloss black	$920	$1,030
10402	Steel underbody toolbox with overhead door. Dimensions are 20"H x 58"L x 22"D. Features stainless steel automotive-type two-stage latches and stainless steel hinges. Includes mounting brackets. Painted gloss black	$1,090	$1,350
	Floodlights		
74311	LED Flood Light Assembly	$85	$105
	Trailer Plugs		
22872	Trailer plug - 7 pin round	$95	$225
22876	Trailer plug - 7-pin (flat)	$95	$225
	Service and Emergency		
37733	Service and emergency gladhands with dummies and mounting bracket	$115	$210
34341	Install customer-supplied gladhands	NA	$160

Note: Any new or used chassis received by Stellar Industries for upfit is subject to additional charges based on time and material to allow for proper installation of Stellar® Products on chassis.

Stellar Industries, Inc.
190 State Street • Garner, IA 50438
800-321-3741 • www.stellarindustries.com

Stellar® Slider50 Hooklift Price Sheet

Version 2 - 50,000 Lbs Capacity

Part#	Description	List Price	Install Price
Note: Hooklift only with mounting kit. Select hydraulics, including reservoir, from list below. Hooklifts hydraulic requirements are 25gpm @ 4200 psi maximum. Hydraulic Pump not included in base hooklift. Select from list below.			
SL50HH54	Stellar Slider50, Version 2, fixed 54" (1372mm) hook height, 50,000lb (23587kg) capacity designed for 186" to 202" (4724mm to 5131mm) CT trucks, for containers 16' to 22' (4877mm to 6706mm), flatbeds up to 24' (7315mm) long. Dump angle is 51°	$28,120	$32,870
SL50HH62	Stellar Slider50, Version 2, fixed 61.75" (1568mm) hook height, 50,000lb (23587kg) capacity designed for 186" to 202" (4724mm to 5131mm) CT trucks, for containers 16' to 22' (4877mm to 6706mm), flatbeds up to 24' (7315mm) long. Dump angle is 51°	$28,120	$32,870
SL50HH5462	Stellar Slider50, Version 2, 54" to 61.75" (1372mm to 1568mm) hydraulic adjustable hook height.42,000lb (19051kg) with 54" (1372mm) hook height or 50,000lb (22680kg) capacity with 61.75" (1568mm) hook height. Designed for 186" to 202" (4724mm to 5131mm) CT for containers 16' to 22' (4877mm to 6706mm), flatbeds up to 24' (7315mm) long. Dump angle is 51°	$30,800	$35,600
Body Latches			
SL50BLOS	Outside Body Latches - Bolt on for Slider50	$390	$420
Hydraulics with Controls			
HYDVAL	Reservoir and valve bank only-no controls	$1,310	$1,340
HYDA2	Reservoir and valve bank with two section air controls for fixed hook height	$1,450	$1,470
HYDA3	Reservoir and valve bank with three section air controls for adjustable hook height	$1,820	$1,850
HYDC2-96	Reservoir and valve bank with two section cable controls for fixed hook height-96"	$1,450	$1,470
HYDC2-144	Reservoir and valve bank with two section extended controls for fixed hook height-144" for extended cab or cabover	$1,510	$1,540
HYDC2-192	Reservoir and valve bank with two section extended controls for fixed hook height-192" for crew cab or cabover	$1,550	$1,580
HYDC3-96	Reservoir and valve bank with three section cable controls for adjustable hook height-96"	$1,450	$1,470
HYDC3-144	Reservoir and valve bank with three section cable controls-144" for extended cab and cabover	$1,510	$1,540
HYDC3-192	Reservoir and valve bank with three section cable controls for adjustable hook height-192" for crew cab or cabover	$1,550	$1,580
Standard Hooklift Additions			
SL50R2	Double Rear Rollers for Slider50	$1,030	NA
POTBL	Paint other than standard black	$390	NA

Stellar Industries, Inc.
190 State Street • Garner, IA 50438
800-321-3741 • www.stellarindustries.com

Stellar® Slider50 Hooklift Price Sheet

Version 2 - 50,000 Lbs Capacity

Part#	Description	List Price	Install Price
SL50PSS	Stainless steel pins in lieu of zinc plated pins, for heavy salt type enviroment.	$1,240	NA
	PTOs		
1599	PTO, standard cable-control for manual transmission	$715	$1,010
5355	PTO, air shift	$785	$1,240
15685	PTO, hot shift for automatic transmission for chassis larger than F550	$1,870	$2,190
	Pumps		
76705	Hydraulic Pump, 3.84 CID piston Hydro Leduc w/ 2" suction and pressure fittings.	$1,310	$1,710
	Fenders		
58217	Poly Fender Assemblies for Tandem Axles with Mounting Brackets	$1,130	$1,790
64058	Tri-axle Poly Fender Assemblies with Mounting Brackets, Consists of Two (2) Tandem and Two (2) Single Axle Steel Fenders	$1,240	$1,890
46122	Tandem Axle Steel Fender Assemblies with Mounting Brackets	$1,100	$1,790
46645	Tri-axle steel fenders with mounting brackets. Consists of (2)tandem and (2) single axle steel fenders	$1,860	$2,530
21132	Aluminum fenders for tandem axle, 1/8" smooth, with mounting brackets	$1,400	$1,970
	Mudflaps		
19494	One pair Stellar mud flaps with mounting bolts (included in factory installation)	$55	NA
	Bumpers		
76381	90K Pintle Hitch Bumper for Slider50	$2,010	$2,370
	Pintle Hitches		
7406	PH-200 (non-air operated) pintle hitch 90000# max. gross tongue weight	$540	$685
8009	PH-200 air operated pintle hitch, 18000# vertical load, 90000# max. gross tongue weight	$630	$810
	Tarpers		
81911	Tarper Assembly SIAT GEN2 for Use with Hooklift	$8,030	$11,130
45337	White mesh tarp for hooklift applications. Must choose this tarp when using with hooklifts.	$370	NA
	ICC Safety Kit		
5305	ICC safety kit consisting of rechargeable fire extinguisher and reflector kit	$135	$160
	Toolboxes		

Stellar Industries, Inc.
190 State Street • Garner, IA 50438
800-321-3741 • www.stellarindustries.com

Stellar® Slider50 Hooklift Price Sheet

Version 2 - 50,000 Lbs Capacity

Part#	Description	List Price	Install Price
10401	Steel underbody toolbox with overhead door. Dimensions are 18"H x 36"L x 18"D. Features stainless steel automotive-type two-stage latches and stainless steel hinges. Includes mounting brackets. Painted gloss black	$890	$1,140
8480	Steel underbody toolbox with overhead door. Dimensions are 20"H x 45"L x 22" D. Features stainless steel automotive-type two-stage latches. Includes mounting brackets. Painted gloss black	$920	$1,030
10402	Steel underbody toolbox with overhead door. Dimensions are 20"H x 58"L x 22"D. Features stainless steel automotive-type two-stage latches and stainless steel hinges. Includes mounting brackets. Painted gloss black	$1,090	$1,350
	Floodlights		
74311	LED Flood Light Assembly	$85	$105
	Trailer Plugs		
22872	Trailer plug - 7 pin round	$95	$225
22876	Trailer plug - 7-pin (flat)	$95	$225
	Service and Emergency		
37733	Service and emergency gladhands with dummies and mounting bracket	$115	$210
34341	Install customer-supplied gladhands	NA	$160

Note: Any new or used chassis received by Stellar Industries for upfit is subject to additional charges based on time and material to allow for proper installation of Stellar® Products on chassis.

Stellar Industries, Inc.
190 State Street • Garner, IA 50438
800-321-3741 • www.stellarindustries.com

Stellar® Slider65 Hooklift Price Sheet

65,000 Lbs Capacity

Part#	Description	List Price	Install Price
Note: Hooklift only with mounting kit. Select hydraulics, including reservoir, from list below. Hooklifts hydraulic requirements are 25gpm @ 4200 psi maximum. Hydraulic Pump not included in base hooklift. Select from list below.			
SL65HH54	Stellar Slider 65, 54" hook height, designed for 170" to 180" CT chassis. Body lengths 16'-22' containers; up to 24' flatbed. Shipping weight approx. 6600lb.	$33,990	$39,170
SL65HH62	Stellar Slider 65, 62" hook height, designed for 170" to 180" CT chassis. Body lengths 16'-22' containers; up to 24' flatbed. Shipping weight approx. 6600lb.	$33,990	$39,170
SL65HH5462	Stellar Slider 65, 54"-62" adjustable hook height, designed for 170" to 180" CT chassis. Body lengths 16'-22' containers; up to 24' flatbed. Shipping weight approx. 6700lb.	$36,160	$41,370
Hydraulics with Controls			
HYDVAL	Reservoir and valve bank only-no controls	$1,310	$1,340
HYDA2	Reservoir and valve bank with two section air controls for fixed hook height	$1,450	$1,470
HYDA3	Reservoir and valve bank with three section air controls for adjustable hook height	$1,820	$1,850
HYDC2-96	Reservoir and valve bank with two section cable controls for fixed hook height-96"	$1,450	$1,470
HYDC2-144	Reservoir and valve bank with two section extended controls for fixed hook height-144" for extended cab or cabover	$1,510	$1,540
HYDC2-192	Reservoir and valve bank with two section extended controls for fixed hook height-192" for crew cab or cabover	$1,550	$1,580
HYDC3-96	Reservoir and valve bank with three section cable controls for adjustable hook height-96"	$1,450	$1,470
HYDC3-144	Reservoir and valve bank with three section cable controls-144" for extended cab and cabover	$1,510	$1,540
HYDC3-192	Reservoir and valve bank with three section cable controls for adjustable hook height-192" for crew cab or cabover	$1,550	$1,580
Standard Hooklift Additions			
POTBL	Paint other than standard black	$390	NA
SL65PSS	Stainless steel pins in lieu of zinc plated pins, for heavy salt type enviroment.	$1,240	NA
PTOs			
1599	PTO, standard cable-control for manual transmission	$715	$1,010
5355	PTO, air shift	$785	$1,240
15685	PTO, hot shift for automatic transmission for chassis larger than F550	$1,870	$2,190
Pumps			
76705	Hydraulic Pump, 3.84 CID piston Hydro Leduc w/ 2" suction and pressure fittings.	$1,310	$1,710

Stellar Industries, Inc.
190 State Street • Garner, IA 50438
800-321-3741 • www.stellarindustries.com

Stellar® Slider65 Hooklift Price Sheet

65,000 Lbs Capacity

Part#	Description	List Price	Install Price
	Fenders		
58217	Poly Fender Assemblies for Tandem Axles with Mounting Brackets	$1,130	$1,790
64058	Tri-axle Poly Fender Assemblies with Mounting Brackets, Consists of Two (2) Tandem and Two (2) Single Axle Steel Fenders	$1,240	$1,890
46122	Tandem Axle Steel Fender Assemblies with Mounting Brackets	$1,100	$1,790
46645	Tri-axle steel fenders with mounting brackets. Consists of (2)tandem and (2) single axle steel fenders	$1,860	$2,530
21132	Aluminum fenders for tandem axle, 1/8" smooth, with mounting brackets	$1,400	$1,970
	Mudflaps		
19494	One pair Stellar mud flaps with mounting bolts (included in factory installation)	$55	NA
	Bumpers		
61729	ICC Bumper w/ Lights (Tarper Application)	$400	$815
5407	Heavy duty rectangular tubing bumper. LED light kit (FMVSS108 compliant) and backup alarm is included. Must be used on 25,000 # GVWR or greater chassis. Will not work on 19,500# GVWR chassis. Stellar AutoTarper ready.	$1,240	$1,580
63580	Bumper, reinforced to accept pintle hitch 90K. (pintle not included). Stellar AutoTarper ready.	$1,800	$2,150
47154	Manually-operated fold out single pivot rear bumper with 90K pintle plate. Extends bumper an additional 19" past the rear of truck when a long body is loaded. Provides for up to 42" allowable overhang	$2,020	$2,420
	Pintle Hitches		
7406	PH-200 (non-air operated) pintle hitch 90000# max. gross tongue weight	$540	$685
8009	PH-200 air operated pintle hitch, 18000# vertical load, 90000# max. gross tongue weight	$630	$810
	Tarpers		
81911	Tarper Assembly SIAT GEN2 for Use with Hooklift	$8,030	$11,130
45337	White mesh tarp for hooklift applications. Must choose this tarp when using with hooklifts.	$370	NA
	ICC Safety Kit		
5305	ICC safety kit consisting of rechargeable fire extinguisher and reflector kit	$135	$160
	Toolboxes		
10401	Steel underbody toolbox with overhead door. Dimensions are 18"H x 36"L x 18"D. Features stainless steel automotive-type two-stage latches and stainless steel hinges. Includes mounting brackets. Painted gloss black	$890	$1,140

Stellar Industries, Inc.
190 State Street • Garner, IA 50438
800-321-3741 • www.stellarindustries.com

Stellar® Slider65 Hooklift Price Sheet

65,000 Lbs Capacity

Part#	Description	List Price	Install Price
8480	Steel underbody toolbox with overhead door. Dimensions are 20"H x 45"L x 22" D. Features stainless steel automotive-type two-stage latches. Includes mounting brackets. Painted gloss black	$920	$1,030
10402	Steel underbody toolbox with overhead door. Dimensions are 20"H x 58"L x 22"D. Features stainless steel automotive-type two-stage latches and stainless steel hinges. Includes mounting brackets. Painted gloss black	$1,090	$1,350
	Floodlights		
74311	LED Flood Light Assembly	$85	$105
	Trailer Plugs		
22872	Trailer plug - 7 pin round	$95	$225
22876	Trailer plug - 7-pin (flat)	$95	$225
	Service and Emergency		
37733	Service and emergency gladhands with dummies and mounting bracket	$115	$210
34341	Install customer-supplied gladhands	NA	$160

Note: Any new or used chassis received by Stellar Industries for upfit is subject to additional charges based on time and material to allow for proper installation of Stellar® Products on chassis.

Stellar Industries, Inc.
190 State Street • Garner, IA 50438
800-321-3741 • www.stellarindustries.com

Stellar® SI 710 Hooklift Price Sheet

20,000 Lbs Capacity Single Pivot

Part#	Description	List Price	Install Price
Note: Hooklift only with mounting kit. Select hydraulics, including reservoir, from list below. There are no latches in base hooklift. Hooklifts hydraulic requirements are 23gpm @ 3000 psi maximum. Hydraulic Pump not included in base hooklift. Select from list below.			
SI710-108	SI710-108-36 36" single pivot style hooklift designed for 108"CA trucks, 11' to 12' bodies	$14,040	$17,550
SI710-120	SI710-120-36 single pivot style hooklift designed for 120"CA chassis, 12' to 13' bodies	$14,040	$17,550
SI710-138	SI710-138-54 single pivot style hooklift designed for 138"CA chassis, 13' to 15' bodies	$14,970	$18,490
SI710-156	SI710-156-54 single pivot style hooklift designed for 156"CA chassis, 15' to 16' bodies	$15,230	$18,410
	Hook Height Options		
SI710HH36	36" hook height-Not available on 138 or 156	NA	NA
SI710HH54	54" hook height	$445	$455
SI710HH62	62" hook height-not available on 108 or 120	$620	$630
	Latch Options		
48100	Inside hold downs to match KP706	$185	NA
52917	Outside hold downs to match KP710	$245	NA
	Hydraulics with Controls		
HYD10VAL	Reservoir and valve bank only-no controls	$865	NA
HYD10C2-96	Reservoir and valve bank with cable controls-96"	$1,010	$1,030
HYD10C2-144	Reservoir and valve bank with extended cable controls- 144" of extended cab or cabover	$1,060	$1,080
HYD10C2-192	Reservoir and valve bank with extended cable controls- 192" of crew cab or cabover	$1,240	$1,260
HYD10A2	Reservoir and valve bank with air controls-2 section	$1,740	$1,770
	Standard Hooklift Additions		
POTBL	Paint other than standard black	$390	NA
	PTOs		
1599	PTO, standard cable-control for manual transmission	$715	$1,010
5355	PTO, air shift	$785	$1,240
15685	PTO, hot shift for automatic transmission for chassis larger than F550	$1,870	$2,190
	Pumps		
56432	Hydraulic pump for chassis above 19,500# GVW. Use with Dodge and IH chassis.	$1,030	$1,330

Stellar Industries, Inc.
190 State Street • Garner, IA 50438
800-321-3741 • www.stellarindustries.com

Stellar® SI 710 Hooklift Price Sheet

20,000 Lbs Capacity Single Pivot

Part#	Description	List Price	Install Price
	Fenders		
6170	One pair poly fenders for 20,000 to 28,000# GVWR chassis with 22.5 wheels, includes fender brackets, mounting hardware. Mud flaps included with factory installation only	$585	$910
46299	One pair steel fenders for 20,000 to 28,000# GVWR chassis with 22.5 wheels, includes fender brackets, mounting hardware. Mud flaps included with factory installation only	$940	$1,250
66325	FENDER ASM AL SMOOTH LOW-PRO	$670	NA
	Mudflaps		
19494	One pair Stellar mud flaps with mounting bolts (included in factory installation)	$55	NA
	Bumpers		
61729	ICC Bumper w/ Lights (Tarper Application)	$400	$815
5407	Heavy duty rectangular tubing bumper. LED light kit (FMVSS108 compliant) and backup alarm is included. Must be used on 25,000 # GVWR or greater chassis. Will not work on 19,500# GVWR chassis. Stellar AutoTarper ready.	$1,240	$1,580
5348	Manually-operated fold out single pivot rear bumper. Extends bumper an additional 19" past the rear of truck when a long body is loaded. Provides for up to 42" allowable overhang	$920	$1,250
17441	Bumper, reinforced to accept pintle hitch 30K (pintle hitch is not included). LED light kit (FMVSS108 compliant) and backup alarm is included. Stellar AutoTarper ready	$1,660	$1,960
31920	Manually-operated fold out single pivot rear bumper with 30K pintle plate. Extends bumper an additional 19" past the rear of truck when a long body is loaded. Provides for up to 42" allowable overhang	$1,940	$2,280
	Pintle Hitches		
57952	Pintle Hitch - 30,000 lb	$190	$330
	ICC Safety Kit		
5305	ICC safety kit consisting of rechargeable fire extinguisher and reflector kit	$135	$160
	Toolboxes		
8480	Steel underbody toolbox with overhead door. Dimensions are 20"H x 45"L x 22" D. Features stainless steel automotive-type two-stage latches. Includes mounting brackets. Painted gloss black	$920	$1,030
10401	Steel underbody toolbox with overhead door. Dimensions are 18"H x 36"L x 18"D. Features stainless steel automotive-type two-stage latches and stainless steel hinges. Includes mounting brackets. Painted gloss black	$890	$1,140

Stellar Industries, Inc.
190 State Street • Garner, IA 50438
800-321-3741 • www.stellarindustries.com

Stellar® SI 710 Hooklift Price Sheet

20,000 Lbs Capacity Single Pivot

Part#	Description	List Price	Install Price
10402	Steel underbody toolbox with overhead door. Dimensions are 20"H x 58"L x 22"D. Features stainless steel automotive-type two-stage latches and stainless steel hinges. Includes mounting brackets. Painted gloss black	$1,090	$1,350
	Floodlights		
74311	LED Flood Light Assembly	$85	$105
	Trailer Plugs		
22876	Trailer plug - 7-pin (flat)	$95	$225
22872	Trailer plug - 7 pin round	$95	$225
	Service and Emergency		
37733	Service and emergency gladhands with dummies and mounting bracket	$115	$210
34341	Install customer-supplied gladhands	NA	$160

Note: Any new or used chassis received by Stellar Industries for upfit is subject to additional charges based on time and material to allow for proper installation of Stellar® Products on chassis.

Stellar Industries, Inc.
190 State Street • Garner, IA 50438
800-321-3741 • www.stellarindustries.com

Stellar® Hooklift Skids, Accessories, & Misc Options

Part#	Description	List Price	Install Price
Note: All skids measured from behind the A-Frame			

Skids for 56-9-3 WITH 31.81" Hook Height

Note: Skids constructed of 4" x 5.4 lb. steel channel and include a front A-frame constructed of 4" x 5.4 lb. steel channel and a 3/4" diameter hook bar. The rear tie down is set at 78.9" from center of the hook bar. (prime only)

8542	8 ft. skid (185 pounds)	$800	NA
8543	9 ft. skid (199 pounds)	$805	NA
8250	10 ft. skid (210 pounds)	$820	NA
8544	11 ft. skid (221 pounds)	$840	NA
6105	A-frame assembly only, add to body with long rails (65 pounds)	$275	NA
9499	Pair, 4.5" diameter x 10" long rubber rollers, for skid (26 pounds)	$495	$570

Skids for 60-10-5, 60-10-8, & others with pin-style tie downs with 35.63" Hook Height

Note: Skids constructed of 5" x 2" x 1/4" wall steel tubing, include a front A-frame constructed of 5" x 2" x 1/4" tubing and 1.25" diameter hook bar. Rear pin-style tie down located 84.8" from center of the hook bar (Prime only)

5527	8 ft. skid (272 pounds)	$990	NA
8554	9 ft. skid (290 pounds)	$985	NA
8555	10 ft. skid (360 pounds)	$1,030	NA
8556	11 ft. skid (381 pounds)	$1,060	NA
8557	12 ft. skid (402 pounds)	$1,080	NA
8558	13 ft. skid (423 pounds)	$1,120	NA
5570	A-frame assembly only, add to body with long rails (128 pounds)	$425	NA
9499	Pair, 4.5" diameter x 10" long rubber rollers, for skid (26 pounds)	$495	$570

Skids with 35.63" Hook Height

Note: Skids constructed of 5" x 2" x 1/4" wall steel tubing, include a front A-frame constructed of 5" x 2" x 1/4" tubing and 1.25" diameter hook bar. Rear pin-style tie down located 84.8" from center of the hook bar (Prime only)

8246	10 ft. skid (360 pounds)	$1,060	NA
8545	11 ft. skid (381 pounds)	$1,080	NA
8548	12 ft. skid (402 pounds)	$1,120	NA
8549	13 ft. skid (423 pounds)	$1,150	NA
8550	14 ft. skid (444 pounds)	$1,180	NA
8551	15 ft. skid (465 pounds)	$1,220	NA
8252	16 ft. skid (486 pounds)	$1,250	NA
8552	17 ft. skid (507 pounds)	$1,280	NA
8553	18 ft. skid (528 pounds)	$1,310	NA

Stellar Industries, Inc.
190 State Street • Garner, IA 50438
800-321-3741 • www.stellarindustries.com

Stellar® Hooklift Skids, Accessories, & Misc Options

Part#	Description	List Price	Install Price
5570	A-frame assembly only, add to body with long rails (128 pounds)	$425	NA
9499	Pair, 4.5" diameter x 10" long rubber rollers, for skid (26 pounds)	$495	$570

Skids with 54" Hook Height

Note: Skids constructed of 6" x 2" x 1/4" wall steel tubing, include a front A-frame constructed of 6" x 2" x 1/4" tubing and 2.50" diameter hook bar. See skid drawings for rear tie down locations

8559	10 ft. skid (464 pounds)	$1,410	NA
8560	11 ft. skid (489 pounds)	$1,450	NA
8561	12 ft. skid (514 pounds)	$1,490	NA
8562	13 ft. skid (539 pounds)	$1,530	NA
8563	14 ft. skid (564 pounds)	$1,580	NA
8564	15 ft. skid (589 pounds)	$1,590	NA
8565	16 ft. skid (614 pounds)	$1,650	NA
8566	17 ft. skid (639 pounds)	$1,700	NA
8567	18 ft. skid (664 pounds)	$1,730	NA
8568	19 ft. skid (689 pounds	$1,780	NA
8569	20 ft. skid (714 pounds)	$1,820	NA
6109	A-frame assembly only, add to body with long rails (194 pounds)	$705	NA
24678	Pair, 8.5" OD diameter x 10" long steel rollers, for skid	$685	$795

Skids for 168-20-20, all 32,000 & 40,000 Lb. capacity hooklifts with 61.75 Hook Height

Note: Skids constructed of 6" x 2" x 1/4" wall steel tubing, include a front A-frame constructed of 6" x 2" x 1/4" tubing and 2.50" diameter hook bar. See skid drawings for rear tie down locations

8570	11 ft. skid (564 pounds)	$1,700	NA
8571	12 ft. skid (596 pounds)	$1,780	NA
8572	13 ft. skid (628 pounds)	$1,810	NA
8573	14 ft. skid (660 pounds)	$1,850	NA
8574	15 ft. skid (692 pounds)	$1,900	NA
8575	16 ft. skid (724 pounds)	$1,950	NA
8576	17 ft. skid (756 pounds)	$1,990	NA
8577	18 ft. skid (788 pounds)	$2,040	NA
8578	19 ft. skid (820 pounds)	$2,100	NA
8579	20 ft. skid (852 pounds)	$2,140	NA
8580	21 ft. skid (884 pounds)	$2,180	NA
8581	22 ft. skid (916 pounds)	$2,230	NA
8582	23 ft. skid (948 pounds)	$2,280	NA

Stellar Industries, Inc.
190 State Street • Garner, IA 50438
800-321-3741 • www.stellarindustries.com

Stellar® Hooklift Skids, Accessories, & Misc Options

Part#	Description	List Price	Install Price
8583	24 ft. skid (980 pounds)	$2,330	NA
6114	A-frame assembly only, add to body with long rails (214 pounds)	$1,110	NA
6117	A-frame assembly only, 6 x 3 x 3/8 tubing (61.75" hook height)	$1,050	NA
24678	Pair, 8.5" OD diameter x 10" long steel rollers, for skid	$685	$795

Skids for 174-20-40, 190-22-40, all 52,000 & 65,000 LB. capacity hooklifts with 61.75" Hook Height

Note: Skids constructed of 6" x 3" x 3/8" wall steel tubing with 1/2" x 3" HRS flat strip along bottom edge, includes front A-frame constructed of 8" x 3" x 3/8" tubing and 2.50" diameter hook bar. Rear tie down set at 197.25" from center of the hook bar.

8584	18 ft. skid (1260 pounds)	$2,340	NA
8585	19 ft. skid (1310 pounds)	$2,350	NA
8586	20 ft. skid (1360 pounds)	$2,910	NA
8587	21 ft. skid (1410 pounds)	$2,960	NA
8588	22 ft. skid (1460 pounds)	$3,040	NA
8589	23 ft. skid (1510 pounds)	$3,090	NA
8590	24 ft. skid (1560 pounds)	$3,180	NA
6119	A-frame assembly only, (8x3x3/8) add to body with long rails (284 pounds)	$1,090	NA
24678	Pair, 8.5" OD diameter x 10" long steel rollers, for skid	$685	$795

Light Duty Telescopic Crane
List Price Book

3315 Telescopic Crane - Hydraulic Proportional....1

3315 Telescopic Crane - Hydraulic On/Off....1

3315 Telescopic Crane - 12V Electric/Hydraulic Proportional....1

3315 Telescopic Crane - 12V Electric/Hydraulic On/Off....1

4421 Telescopic Crane - Hydraulic Proportional....1

4421 Telescopic Crane - Hydraulic On/Off....2

4421 Telescopic Crane - 12V Electric/Hydraulic Proportional....2

4421 Telescopic Crane - 12V Electric/Hydraulic On/Off....2

5521 Telescopic Crane - Hydraulic Proportional....2

5521 Telescopic Crane - 12V Electric/Hydraulic....2

Crane Options....2

PTOs....3

Hydraulic Pumps....3

Stabilizers - Weld-on / Bolt-on....3

Crane Pedestals....3

Speed Controls....4

Electrical Options....4

Stellar Industries, Inc.
190 State Street
PO Box 169
Garner, IA 50438
800-321-3741
Fax: 641-923-2811
sales@stellarindustries.com
www.stellarindustries.com

Subject to Change without Notification.
© 2017 Stellar Industries, Inc.

Effective: 01/01/17
Last Revision: 01/01/17

Stellar Industries, Inc.
190 State Street • Garner, IA 50438
800-321-3741 • www.stellarindustries.com

Stellar® Light Duty Telescopic Crane Price Sheet

Part#	Description	List Price	Install Price
	3315 Telescopic Crane - Hydraulic Proportional		
69784S	Stellar® 3315 Telescopic Crane - V2 - 11,500 ft/lb rated, 3,200 lb. maximum capacity - 2 Hydraulic Extensions to 15' - PTO Hydraulic with CDT™ equipped proportional radio remote control.	$15,970	$16,960
69959S	Stellar® 3315 Telescopic Crane - V2 - 11,500 ft/lb rated, 3,200 lb. maximum capacity - 1 Hydraulic / 1 Manual Extension to 15' - PTO Hydraulic with CDT™ equipped proportional radio remote control.	$14,420	$15,390
	3315 Telescopic Crane - Hydraulic On/Off		
70068S	Stellar® 3315 Telescopic Crane - V2 - 11,500 ft/lb, 3,200 lb. maximum capacity - 2 Hydraulic Extensions to 15' - PTO Hydraulic with on/off radio remote control.	$14,530	$15,490
70069S	Stellar® 3315 Telescopic Crane - V2 - 11,500 ft/lb, 3,200 lb. maximum capacity - 1 Hydraulic / 1 Manual Extension to 15' - PTO Hydraulic with on/off radio remote control.	$12,980	$13,920
	3315 Telescopic Crane - 12V Electric/Hydraulic Proportional		
70070S	Stellar® 3315 Telescopic Crane - V2 - 11,500 ft/lb rated, 3,200 lb. maximum capacity - 2 Hydraulic Extensions to 15' - 12V Electric/Hydraulic with CDT™ equipped proportional radio remote control.	$17,100	$18,120
70071S	Stellar® 3315 Telescopic Crane - V2 - 11,500 ft/lb rated, 3,200 lb. maximum capacity - 1 Hydraulic / 1 Manual Extension to 15' - 12V Electric/Hydraulic with CDT™ equipped proportional radio remote control.	$15,450	$16,440
	3315 Telescopic Crane - 12V Electric/Hydraulic On/Off		
70082S	Stellar® 3315 Telescopic Crane - V2 - 11,500 ft/lb rated, 3,200 lb. maximum capacity - 2 Hydraulic Extensions to 15' - 12V Electric/Hydraulic with on/off radio remote control.	$15,150	$16,120
70083S	Stellar® 3315 Telescopic Crane - V2 - 11,500 ft/lb rated, 3,200 lb. maximum capacity - 1 Hydraulic / 1 Manual Extension to 15' - 12V Electric/Hydraulic with on/off radio remote control.	$13,500	$14,440
	3315 Crating Fees		
48688	Crating Fee for EC3200, 3315 for LTL Freight. Complete plywood crate to protect crane for shipment on LTL freight carriers. Stellar Industries is not responsible for crane damage using LTL freight.	$485	NA
	4421 Telescopic Crane - Hydraulic Proportional		
69393S	Stellar® 4421 Telescopic Crane - 16,000 ft/lb rated, 4,000 lb. maximum capacity - 2 Hydraulic Extensions to 21' - PTO Hydraulic with CDT™ equipped proportional radio remote control.	$17,620	$18,640

Stellar Industries, Inc.
190 State Street • Garner, IA 50438
800-321-3741 • www.stellarindustries.com

Stellar® Light Duty Telescopic Crane Price Sheet

Part#	Description	List Price	Install Price
69960S	Stellar® 4421 Telescopic Crane - 16,000 ft/lb rated, 4,000 lb. maximum capacity - 1 Hydraulic / Manual Extension to 21' - PTO Hydraulic with CDT™ equipped proportional radio remote control.	$16,480	$17,490
	4421 Telescopic Crane - Hydraulic On/Off		
70024S	Stellar® 4421 Telescopic Crane - 16,000 ft/lb rated, 4,000 lb. maximum capacity - 2 Hydraulic Extensions to 21' - PTO Hydraulic on/off radio remote control.	$16,480	$17,490
70025S	Stellar® 4421 Telescopic Crane - 16,000 ft/lb rated, 4,000 lb. maximum capacity - 1 Hydraulic / 1 Manual Extension to 21' - PTO Hydraulic on/off radio remote control.	$15,350	$16,340
	4421 Telescopic Crane - 12V Electric/Hydraulic Proportional		
70064S	Stellar® 4421 Telescopic Crane - 16,000 ft/lb rated, 4,000 lb. maximum capacity - 2 Hydraulic Extensions to 21' - 12V Electric/Hydraulic with CDT™ equipped proportional radio remote control.	$19,060	$20,110
70065S	Stellar® 4421 Telescopic Crane - 16,000 ft/lb rated, 4,000 lb. maximum capacity - 1 Hydraulic /1 Manual Extension to 21' - 12V Electric/Hydraulic with CDT™ equipped proportional radio remote control.	$17,880	$18,900
	4421 Telescopic Crane - 12V Electric/Hydraulic On/Off		
70066S	Stellar® 4421 Telescopic Crane - 16,000 ft/lb rated, 4,000 lb. maximum capacity - 2 Hydraulic Extensions to 21' - 12V Electric/Hydraulic with on/off radio remote control.	$17,510	$18,540
70067S	Stellar® 4421 Telescopic Crane - 16,000 ft/lb rated, 4,000 lb. maximum capacity - 1 Hydraulic / 1 Manual Extension to 21' - 12V Electric/Hydraulic with on/off radio remote control.	$16,380	$17,380
	5521 Telescopic Crane - Hydraulic Proportional		
72818S	Stellar® 5521 Telescopic Crane - V2 - 29,500 ft/lb rated, 5,000 lb. maximum capacity - 2 Hydraulic Extensions to 21' - PTO Hydraulic with CDT™ equipped proportional radio remote control.	$19,160	$20,220
72834S	Stellar® 5521 Telescopic Crane - V2 - 29,500 ft/lb rated, 5,000 lb. maximum capacity - 1 Hydraulic / 1 Manual Extension to 21' - PTO Hydraulic with CDT™ equipped proportional radio remote control.	$18,030	$19,060
	5521 Telescopic Crane - 12V Electric/Hydraulic Proportional		
72835S	Stellar® 5521 Telescopic Crane - V2 - 29,500 ft/lb rated, 5,000 lb. maximum capacity - 2 Hydraulic Extensions to 21' - 12V Electric/Hydraulic with CDT™ equipped proportional radio remote control.	$20,190	$21,270
72836S	Stellar® 5521 Telescopic Crane - V2 - 29,500 ft/lb rated, 5,000 lb. maximum capacity - 1 Hydraulic / 1 Manual Extension to 21' - 12V Electric/Hydraulic with CDT™ equipped proportional radio remote control.	$19,060	$20,110

Stellar Industries, Inc.
190 State Street • Garner, IA 50438
800-321-3741 • www.stellarindustries.com

Stellar® Light Duty Telescopic Crane Price Sheet

Part#	Description	List Price	Install Price
	Crane Options		
9455	Paint crane other than standard white (Z1)	$855	NA
40840	Charger, 12V with 4 AA batteries included - Not for CDTplus Cranes	$95	NA
39027	Single part line down haul weight	$125	NA
	PTOs		
1599	PTO, standard cable-control for manual transmission	$715	$1,010
5355	PTO, air shift	$785	$1,240
24011	PTO for automatic transmission for IH TerraStar	$1,540	$2,020
15685	PTO, hot shift for automatic transmission for chassis larger than F550	$1,870	$2,190
8150	PTO for automatic transmission for Ford Super Duty (4X2 or 4X4)	$1,540	$2,020
44477	PTO for automatic transmission for RAM / DODGE	$1,540	$2,020
	Hydraulic Pumps		
9022	Hydraulic pump, single section for crane only	$505	$1,010
9023	Hydraulic pump, tandem section for crane and compressor	$1,290	$1,810
	Stabilizers - Weld-on / Bolt-on		
44578	Stabilizer assembly, crank down, 7000# (1 stabilizer)	$250	$305
20959	Stabilizer assembly, crank down, 7000# (2 stabilizers)	$475	$570
12344	Stabilizer, manual out/crank down - for non-Stellar mechanics body with corner mount crane support, painted black, weld-on	$2,030	$2,190
12645	Stabilizers, manual out/hydraulic down - for non-Stellar mechanics body with corner mount crane support, painted black, weld-on	$3,720	$4,140
12342	Stabilizer, hydraulic out/hydraulic down - for non-Stellar mechanics body with corner mount crane support, painted black, weld-on	$4,630	$5,170
	Stabilizers - For Knapheide Crane Bodies		
12646	Stabilizer, manual out / crank down - fits Knapheide crane bodies only	$1,400	NA
12644	Stabilizer, manual out / hydraulic down - fits Knapheide crane bodies only	$2,630	NA
11989	Stabilizer, hydraulic out / hydraulic down - fits Knapheide crane bodies only	$3,250	NA
	Boom Support		
21545	Boom support for 3315 crane	$155	$200
38101	Adjustable boom support with roller rest, painted black, for TMAX1/TMAX2/TMAX3 body	$320	$360
23380	Boom support painted black (all cranes for TMAX1-9' body)	$355	$465
39027	Single part line down haul weight	$125	NA

Stellar Industries, Inc.
190 State Street • Garner, IA 50438
800-321-3741 • www.stellarindustries.com

Stellar® Light Duty Telescopic Crane Price Sheet

Part#	Description	List Price	Install Price
	Crane Pedestals		
52570	Crane Pedestal - 14" High - EC3200, 3315	$405	NA
52568	Crane Pedestal - 18" High - EC3200-EC5000, 3315-4420	$590	NA
52566	Crane Pedestal - 24" High - EC3200-EC5000, 3315-4420	$620	NA
52502	Crane Pedestal - 36" High - EC3200-EC5000, 3315-4420	$695	NA
	Speed Controls		
56590S	Electronic load-sensing speed control for Ford diesel and gas engines	$630	$725
32095	Electronic load-sensing speed control for 2005 -2010 Ford diesel engines	$630	NA
8295	Program speed control for Cat engine	NA	$265
37981X	Program speed control for Cummins engine	$265	$265
24853	Programmable speed control assembly for automatic transmission with Dura-max diesel for C4500/5500 (2007-2009)	$415	$505
75463	Speed Control - Any Ford, RAM or GM Without a PTO.	$260	$340
68994	Speed control - RAM ONLY, 2013 - 2016. (2014 MY trucks will need VISM changed)	$260	$340
	Electrical Options		
34536	Front VEC Control panel (Includes body harness, relay board kit)	$2,140	$2,180
34537	Rear VEC Control panel (Includes body harness, relay board kit, rear mount kit)	$1,950	$1,990
34535	Dual VEC Control panel (Includes body harness, relay board kit, rear mount kit)	$2,320	$2,370
48373	Basic crane electrical installation kit, includes 5 relays, switch, instruction sheet. Used to manually wire all functions to chassis	$75	NA
72974	Pedestal Mount - E-Link/VEC (Ford F250 - F750)	$200	NA
72975	Pedestal Mount - E-Link/VEC (RAM Chassis)	$200	NA

TC Series Telescopic Crane
List Price Book

TC Series Telescopic Crane Models.....1
Optional Subframe/Stabilizer Kit.....1
Optional Base Kit.....1
Optional Extension Kit.....1
Optional Power Unit/Reservoir.....1

Stellar Industries, Inc.
190 State Street
PO Box 169
Garner, IA 50438
800-321-3741
Fax: 641-923-2811
sales@stellarindustries.com
www.stellarindustries.com

Subject to Change without Notification.
© 2015 Stellar Industries, Inc.

Effective: 03/12/15
Last Revision: 08/24/15

Stellar Industries, Inc.
190 State Street • Garner, IA 50438
800-321-3741 • www.stellarindustries.com

Stellar® TC Series Telescopic Crane Price Sheet

Part#	Description	List Price	Install Price
77899S	Stellar Model TC13-2H telescopic crane - 8,680 ft/lb, 2,400 lb. maximum capacity, hydraulic reach to 8.75', four-function radio remote standard, worm gear bearing rotation system, 365 lbs., Painted white.	$9,500.00	$10,100.00
78239S	Stellar Model TC23-2H telescopic crane - 16,635 ft/lb, 4,185 lb. maximum capacity, hydraulic reach to 9.94', four-function radio remote standard, worm gear bearing rotation system, 498 lbs., Painted white.	$11,000.00	$11,600.00
78240S	Stellar Model TC33-2H telescopic crane - 23,145 ft/lb, 4,915 lb. maximum capacity, hydraulic reach to 11.97', four-function radio remote standard, worm gear bearing rotation system, 706 lbs., Painted white.	$13,100.00	$13,700.00
78241S	Stellar Model TC38-4H telescopic crane - 23,145 ft/lb, 4,520 lb. maximum capacity, hydraulic reach to 19.69', four-function radio remote standard, worm gear bearing rotation system, 770 lbs., Painted white.	$19,100.00	$19,700.00
	Optional Subframe/Stabilizer Kit		
79937	Subframe with stabilizer for TC13/TC23. Includes single crank down stabilizer leg for crane side. To be mounted under or into a flatbed body.	$900.00	$1,800.00
	Optional Base Kit		
78129	Stand Alone Base Kit for model TC33/TC38 cranes - Manual out/Hydraulic down stabilizers.	$4,600.00	$5,000.00
	Optional Extension Kit		
77255	Extension Kit - TC23-3H Upgrade	NA	$1,200.00
77256	Extension Kit - TC33-3H Upgrade	NA	$1,200.00
	Optional Power Unit/Reservoir		
77897	12V power unit with hydraulic reservoir, return filter, crane wiring installation, and manual override switch. Designed to be truck frame mounted.	$1,500.00	$1,800.00
77259	Hydraulic Reservoir - 10 gallon. Designed for TC Series.	$900.00	$1,200.00

TOMMY GATE COMPANY

PARTS PRICE LIST

DISTRIBUTOR

Effective May, 2016

WOODBINE MANUFACTURING COMPANY
83 Bus Brown Drive
Woodbine, Iowa 51579

(800) 543-8428
(712) 847-8000
Fax: (712) 647-2417

All Parts are FOB Woodbine, Iowa

Part(s) shipped from a regional warehouse are subject to a $10.00 per order warehouse fee.

CONTROL PRICE LIST

FIXED CONTROL

Part No.	Description	Sugg. Retail (Each)
000987	Replacement Fixed Control	$ 129.00
013559	Replacement Compact Fixed Control (Specific Liftgates Only, call Tommy Gate)	$ 223.00
009595	Fixed Retro Kit (Artisan to Eltek)	$ 189.00
009455	Additional Fixed Control Kit	$ 150.00

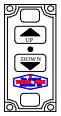

Old Artisan

Standard Fixed

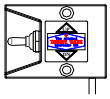

Compact

PENDANT CONTROL

Part No.	Description	Sugg. Retail (Each)
009490	Complete Pendant Kit (Railgate)	$ 286.00
009603	Complete Pendant Kit (Cable Gate & G2)	$ 298.00
000993	Replacement 650 Pendant Control	$ 146.00
009573	Replacement Pendant Only	$ 193.00
000985	Replacement Receptacle Harness	$ 51.60
011278	Replacement Pendant Supply Cable (Cantilever)	$ 90.65

Pendant

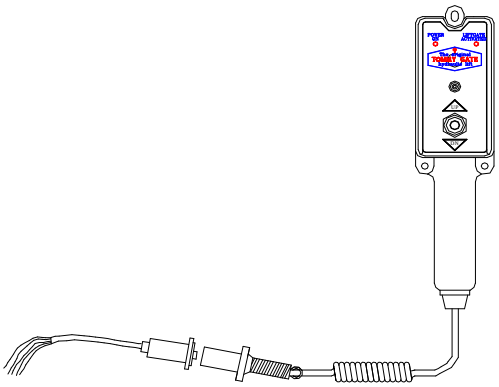

3.5' - 9'

MISCELLANEOUS

Part No.	Description	Sugg. Retail (Each)
984	Replacement Toggle Only (Blue)	$ 20.50
983	Replacement Toggle Only (Black)	$ 20.50
982	Replacement 3 FT Ground Cables	$ 16.80
998	Replacement 150Amp Manual Circuit Breaker	$ 61.10
981	Replacement Molded Housing - Eltek II	$ 26.05
980	Replacement Fixed Control Weld-on Box	$ 20.50
892	Replacement Pendant Handle	$ 19.40

650 SERIES PARTS DRAWING

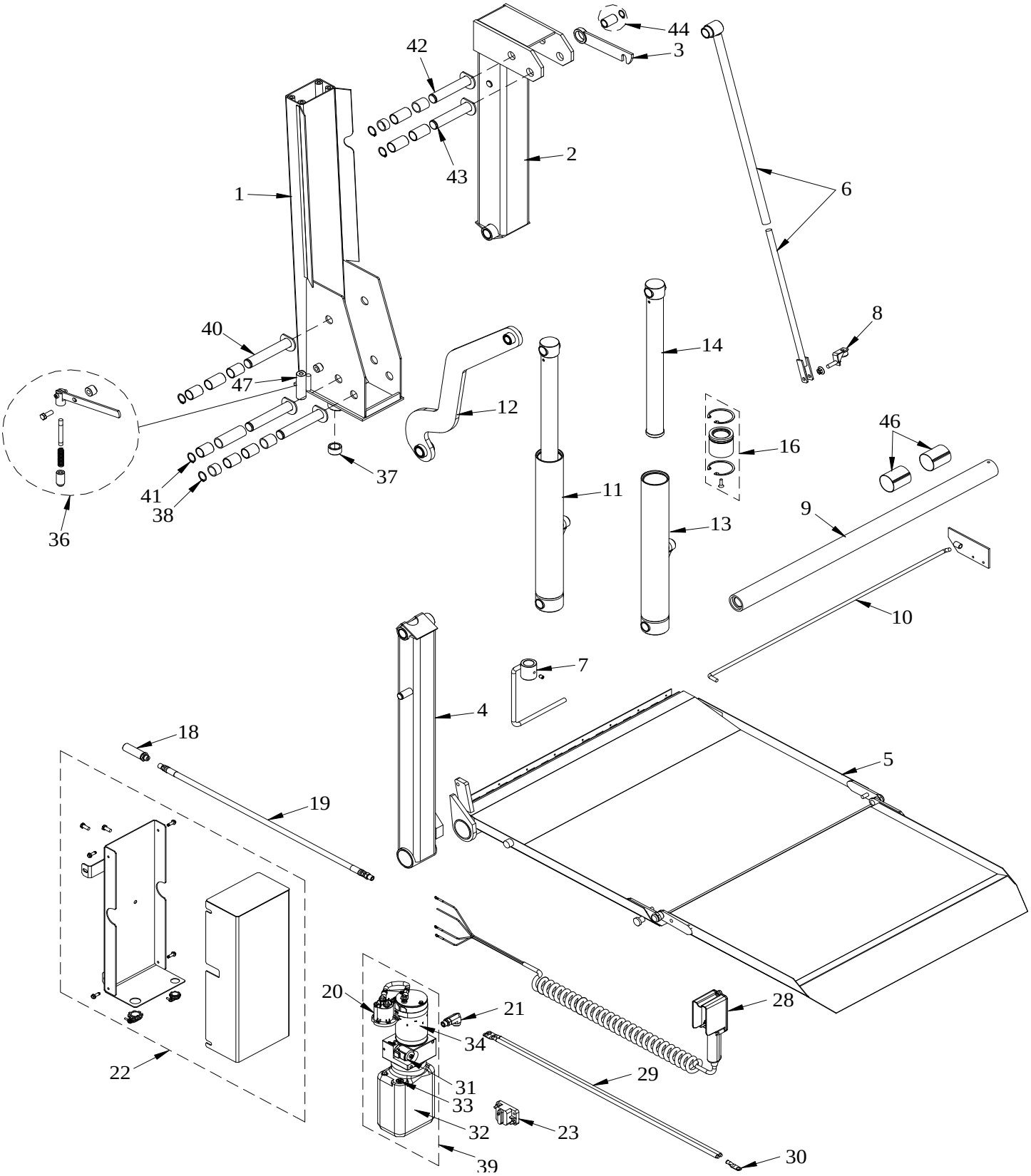

650 SERIES PARTS PRICE LIST

Draw. Ref.	Part No.	Description	Qty Required	Sugg. Retail (Each)
1	002206	Replacement 650 Support Tube Assembly	1	$ 276.00
2	002209	Replacement 650 Main Lift Tube (4x4x26.12)	1	$ 176.00
3	002205	Replacement 650 Platform Latch	1	$ 19.40
4	002212	Replacement Vertical Lift Tube (3x3x30.68)	1	$ 230.00
5	001400	650 Replacement Platform	1	$ 434.00
6	001403	650 Self Close Tube Kit	1	$ 61.65
7	002722	Replacement Flipper Arm Self-Closing Rod	1	$ 26.40
8	002203	Replacement Flipper Stop (650-31)	1	$ 10.15
9	001385	2"x37.25" Replacement Hinge Tube w/Bushings (650)	1	$ 230.00
10	002480	Torsion Assist Spring Kit (650)	1	$ 46.00
11	002725	Replacement 650 Cylinder	1	$ 608.00
12	002724	Replacement 650 Lift Arm	1	$ 193.00
13	001383	Replacement Cylinder Tube (650)	1	$ 186.00
14	001396	Replacement Cylinder Shaft w/End Lugs Includes: Guide Bushing & O-ring Kit	1	$ 235.00
16	002481	Replacement Guide Bushing & O-ring Kit (650)	1	$ 76.80
18	000997	Replacement 650 Flow Control w/ Adapters	1	$ 51.40
19	012683	Replacement 1/4"x48" Hydraulic Hose w/ Adapters (72P/72S & 650)	1	$ 47.20
	012680	Replacement 1/4"x37" Hydraulic Hose w/ Adapters (54, 60-1340 & 650)	1	$ 45.15
20	000995	Replacement Solenoid - 4 Post (650)	1	$ 58.45
21	000994	Replacement 90 degree Elbow w/ Adapters (650)	1	$ 17.10
22	014520	Replacement 650 Pump Box (only) Gate Mount	1	$ 38.35
23	000998	Replacement 150 Amp Manual Reset Circuit Breaker	1	$ 61.10
28	000993	Replacement 650 Pendant Control	1	$ 146.00
29	004570	Replacement 4 Ga. 2 Wire Electrical Cable w/Lugs 26ft.	1	$ 103.00
30	000992	Replacement Copper Lug	6	$ 4.15
31	002727	Replacement 650 Release Solenoid External Assembly w/Connector	1	$ 105.00
32	002728	650 Replacement Tank	1	$ 123.00
33	000989	Replacement Vent Plug	1	$ 4.15
34	001495	650 Motor (only)	1	$ 357.00
35	N/A	Pump (only) w/Tank (1550psi) 650 (Discontinued - See Drawing Ref 39)	1	N/A
36	002482	650 Pivot Latch Kit (Black Knob)	1	$ 19.40
	010451	650 Pivot Latch Kit (Lever)	1	$ 31.55
37	000988	Replacement Lower Pivot Bushing	1	$ 8.20
38	001437	650 Pin Kit (Lower Cylinder)	1	$ 21.20
39	002726	M259 Replacement Pump & Motor Unit (1.5L) (1550psi)	1	$ 522.00
40	002207	650 Pin Kit (Lower 4x4 Lift Tube)	1	$ 21.20
41	002208	650 Pin Kit (Lower S-Arm)	1	$ 21.20
42	001438	650 Pin Kit (Upper Cylinder)	1	$ 21.20
43	002210	650 Pin Kit (Upper 3x3 Lift Tube)	1	$ 21.20
44	002211	650 Latch & Self Close Bushing Kit	2	$ 6.25
46	002204	Replacement Platform Wear Bushing Kit	1	$ 10.15
47	002723	Replacement Pivot Pin Sleeve (650)	1	$ 65.95

Please provide the liftgate Model and Serial numbers when ordering repair parts.
Note: The above prices are for standard equipment only. Call the factory for pricing of optional equipment or special features.

1340, 1540 AND 1640 SERIES G2 PARTS DRAWING

FOR MODELS 54, 60, 64

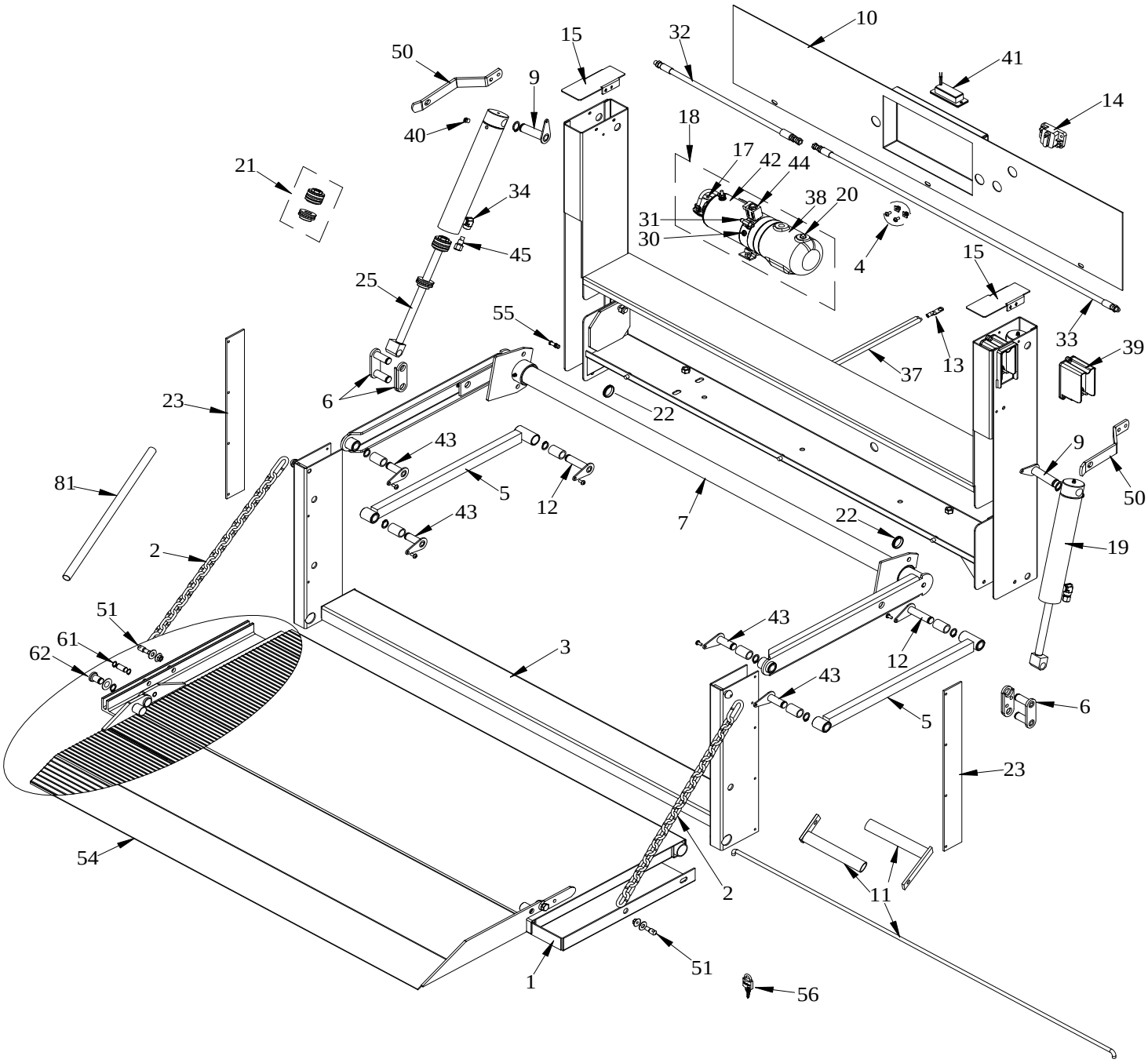

1340, 1540 & 1640 G2 SERIES PARTS PRICE LIST

Draw. Ref.	Part No.	Description	Qty Required	Sugg. Retail (Each)
1	004833	54 G2 27" Treadplate Replacement Platform	1	$ 367.00
	004834	54 G2 38" Treadplate Replacement Platform	1	$ 532.00
	004835	54 G2 42" Treadplate Replacement Platform	1	$ 545.00
	001631	54 38" EA Replacement Platform	1	$ 862.00
	004820	54 48 EA Replacement Platform	1	$ 1,140.00
	004866	60 G2 27" Treadplate Replacement Platform	1	$ 392.00
	004867	60 G2 38" Treadplate Replacement Platform	1	$ 577.00
	004868	60 G2 42" Treadplate Replacement Platform	1	$ 616.00
	001632	60 38" EA Replacement Platform	1	$ 900.00
	004799	60 48 EA Replacement Platform	1	$ 1,176.00
	001633	64/65 38" EA Replacement Platform	1	$ 941.00
	004798	64/65 48" EA Replacement Platform	1	$ 1,217.00
2	003883	Replacement G2 Treadplate Platform Chain	2	$ 28.35
	006473	Replacement 38" EA Platform Chain	2	$ 35.55
	013650	Replacement 48" EA Platform Chain	2	$ 52.85
3	002044	54-40 G2 Replacement Sub Assembly	1	$ 309.00
	002045	60-40 G2 Replacement Sub Assembly	1	$ 319.00
	002046	64-40 G2 Replacement Sub Assembly	1	$ 325.00
4	001111	License Plate Mount Kit	1	$ 4.15
5	007007	G2 Replacement Lower Arm w/Pins & Bushings	2	$ 120.00
6	002182	G2 Replacement Clevis Cylinder Assembly	2	$ 51.85
7	002040	54-40 G2 Replacement Upper Arm Assembly	1	$ 511.00
	002041	60-40 G2 Replacement Upper Arm Assembly	1	$ 539.00
	002042	64-40 G2 Replacement Upper Arm Assembly	1	$ 563.00
9	002180	7/8" Replacement G2 Upright Back Cylinder Pin	2	$ 33.30
10	004837	Replacement Box Cover (54 G2)	1	$ 83.00
	004949	Replacement Box Cover (60 G2)	1	$ 87.10
	004950	Replacement Box Cover (64 G2)	1	$ 89.45
11	001220	27" TP Hinge Tube Spring Holders (no spring)	1	$ 50.25
	008025	Torsion Spring Kit (54)	1	$ 64.40
	008083	Torsion Spring Kit (54) Deep Platform	1	$ 64.40
	008026	Torsion Spring Kit (60)	1	$ 64.40
	008084	Torsion Spring Kit (60) Deep Platform	1	$ 64.40
	008027	Torsion Spring Kit (64/65)	1	$ 64.40
	008085	Torsion Spring Kit (64/65) Deep Platform	1	$ 64.40
12	002181	3/4" Replacement G2 Upright Back Arm Pin & Bushing	2	$ 36.35
13	000992	Replacement Copper Lug	6	$ 4.15
14	000998	Replacement 150 Amp Manual Reset Circuit Breaker	1	$ 61.10
15	002015	Replacement G2 Upright Cap	2	$ 10.15
17	000967	Replacement Raise Solenoid-3 Post	1	$ 58.45
18	000968	Replacement 1340 G2 Pump & Motor Unit (2050psi)	1	$ 522.00
	000969	Replacement 1540 G2 Pump & Motor Unit (2350psi)	1	$ 522.00
	000970	Replacement 1640 G2 Pump & Motor Unit (2500psi)	1	$ 522.00
19	000971	Replacement G2 Cylinder	2	$ 350.00
20	000989	Replacement Vent Plug	1	$ 4.15
21	001138	G2 Cylinder Repair Kit (after serial # 470166M)	2	$ 92.35
22	000972	Replacement Split Plastic Grommet Kit	2	$ 4.15
23	002143	Replacement G2 Sub Assembly Belting	2	$ 16.40
25	001211	Replacement G2 Cylinder Shaft Complete (40) (after serial # 470166M)	2	$ 259.00
30	000973	Replacement Monarch Lee Check Valve (after serial # M-335705 1000# & 1300#) (after serial # M16-26635 1600#)	1	$ 29.95
31	000974	Replacement G2 T-Fitting (Pump & Motor)	1	$ 23.50
32	000975	Replacement 1/4"X21" Hydraulic Hose-Left (G2)	1	$ 29.70
33	000976	Replacement 1/4"x52" Hydraulic Hose-Right (54 & 60 G2)	1	$ 43.75
	000977	Replacement 1/4"x56.63" Hydraulic Hose-Right (64 G2)	1	$ 48.85

1340, 1540 & 1640 G2 SERIES PARTS PRICE LIST

Draw. Ref.	Part No.	Description	Qty Required	Sugg. Retail (Each)
34	000978	Replacement 1/4"x1/4"x90 Degree Steel Cylinder Elbow	2	$ 6.25
37	004570	Replacement 4 Ga. 2 Wire Electric Cable w/Lugs-26 ft.	1	$ 103.00
38	000957	Replacement 1.5qt. Monarch Plastic Tank (G2) **	1	$ 62.25
39	000987	Replacement Fixed Control	1	$ 129.00
40	000979	Replacement Vent Plug - Cylinder (Rail & G2)	2	$ 4.15
41	004036	Replacement License Plate Light & Bracket (154C)	1	$ 23.15
	010199	Replacement License Plate Light & Bracket (H1)	1	$ 23.25
42	000958	Replacement 12 Volt Motor-Only (Monarch)**	1	$ 298.00
43	002183	3/4" Replacement G2 Upright Front Arm Pin	4	$ 33.45
44	009645	Release Solenoid External Assembly w/Connector	1	$ 96.75
45	000959	Replacement Flow Control (G2)	2	$ 43.00
47	N/A	Replacement Pump (only) w/1.5qt. Tank 1340 G2 (2050psi) (Discontinued - See Drawing Ref 18)	1	N/A
	N/A	Replacement Pump (only) w/1.5qt. Tank 1540 G2 (2350psi) (Discontinued - See Drawing Ref 18)	1	N/A
	N/A	Replacement Pump (only) w/1.5qt. Tank 1640 G2 (2500psi) (Discontinued - See Drawing Ref 18)	1	N/A
50	002017	G2 Replacement Latch Kit	2	$ 34.25
51	002020	Replacement Platform Latch Pin Assembly (G2)	2	$ 8.95
54	000960	G2 54-F11+4 Replacement Treadplate Flipper	1	$ 255.00
	000961	G2 54-F11+7 Replacement Treadplate Flipper	1	$ 316.00
	001881	54-F11 Replacement EA Flipper	1	$ 388.00
	000962	G2 60-F11+4 Replacement Treadplate Flipper	1	$ 260.00
	000963	G2 60-F11+7 Replacement Treadplate Flipper	1	$ 340.00
	001882	60-F11 Replacement EA Flipper	1	$ 402.00
	001883	64/65-F11 Replacement EA Flipper	1	$ 447.00
55	001010	G2 Replacement Drop Away Pin Assembly	1	$ 6.25
56	000966	Replacement Padlock w/Keys	1	$ 9.65
61	004712	EA Replacement Platform Chain Pin (1.079")	2	$ 9.50
62	004717	EA Replacement Flipper Rivet	2	$ 11.20
81	006514	Replacement Cloth Chain Cover 20"	2	$ 13.00
	006516	Replacement Cloth Chain Cover 29"	2	$ 13.00

**Please provide the liftgate Model and Serial numbers when ordering repair parts.
Note: The above prices are for standard equipment only. Call the factory for pricing of optional equipment or special features.

1342, 1542 AND 1642 SERIES G2 PARTS DRAWING

FOR MODELS 54, 60, 65

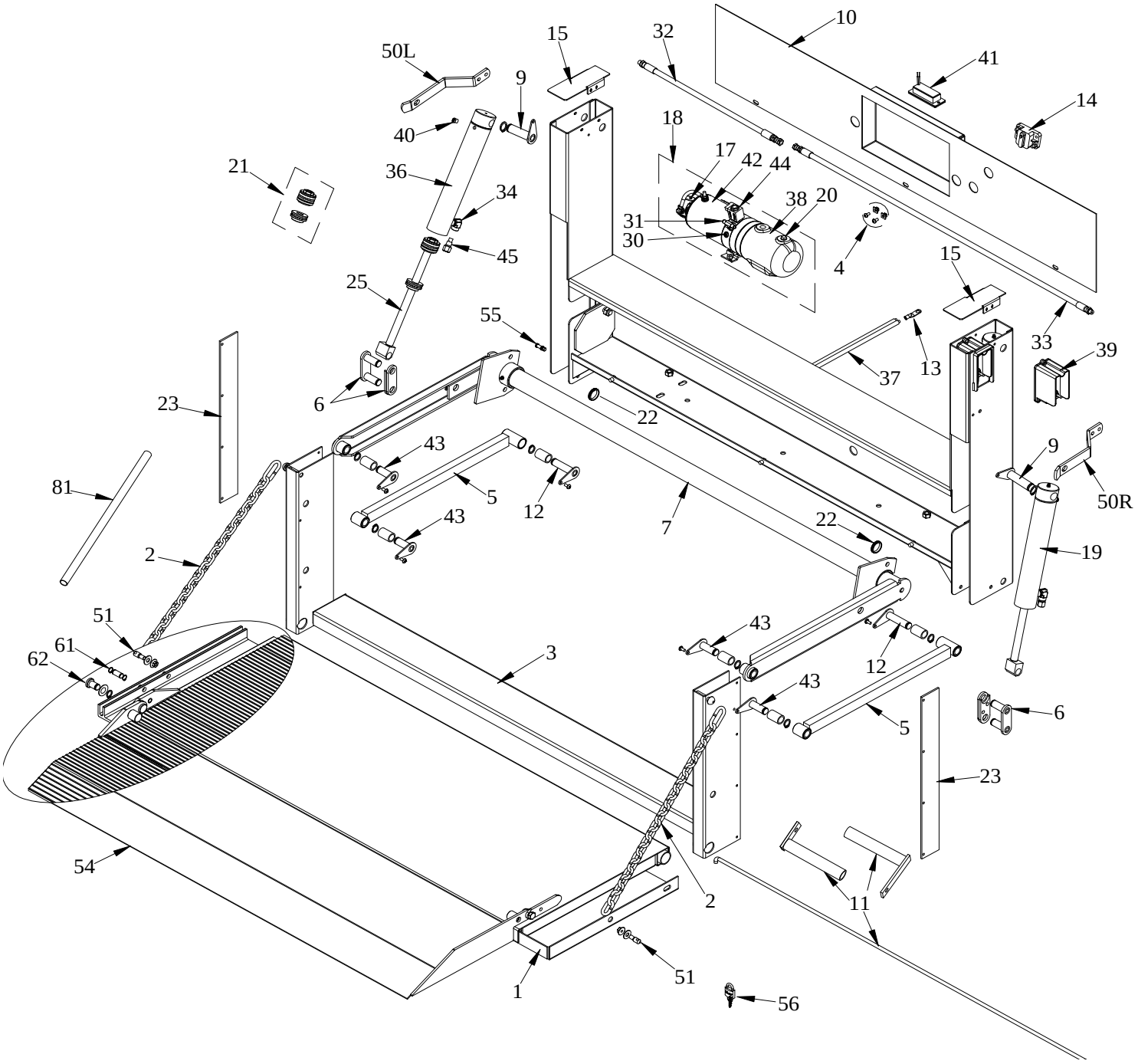

1342, 1542 & 1642 G2 SERIES PARTS PRICE LIST

Draw. Ref.	Part No.	Description	Qty Required	Sugg. Retail (Each)
1	004833	54 G2 27" Treadplate Replacement Platform	1	$ 367.00
	004834	54 G2 38" Treadplate Replacement Platform	1	$ 532.00
	004835	54 G2 42" Treadplate Replacement Platform	1	$ 545.00
	001631	54 38" EA Replacement Platform	1	$ 862.00
	004820	54 48" EA Replacement Platform	1	$ 1,140.00
	004866	60 G2 27" Treadplate Replacement Platform	1	$ 392.00
	004867	60 G2 38" Treadplate Replacement Platform	1	$ 577.00
	004868	60 G2 42" Treadplate Replacement Platform	1	$ 616.00
	001632	60 38" EA Replacement Platform	1	$ 900.00
	004799	60 48" EA Replacement Platform	1	$ 1,176.00
	004869	65 G2 27" Treadplate Replacement Platform	1	$ 410.00
	004871	65 G2 42" Treadplate Replacement Platform	1	$ 647.00
	001633	64/65 38" EA Replacement Platform	1	$ 941.00
	004798	64/65 48" EA Replacement Platform	1	$ 1,217.00
2	003883	Replacement G2 Treadplate Platform Chain	2	$ 28.35
	006473	Replacement 27" EA & 38" EA Platform Chain	2	$ 35.55
	013650	Replacement 48" EA Platform Chain	2	$ 52.85
3	011302	54-42 G2 Replacement Sub Assembly	1	$ 309.00
	011303	60-42 G2 Replacement Sub Assembly	1	$ 319.00
	011304	65-42 G2 Replacement Sub Assembly	1	$ 325.00
4	001111	License Plate Mount Kit	1	$ 4.15
5	011305	G2 Replacement Lower Arm w/Pins & Bushings (42)	2	$ 120.00
6	011306	G2 Replacement Clevis Cylinder Assembly (42)	2	$ 51.85
7	011307	54-42 G2 Replacement Upper Arm Assembly	1	$ 511.00
	011308	60-42 G2 Replacement Upper Arm Assembly	1	$ 539.00
	011309	65-42 G2 Replacement Upper Arm Assembly	1	$ 563.00
9	002180	7/8" Replacement G2 Upright Back Cylinder Pin	2	$ 33.30
10	004837	Replacement Box Cover (54 G2)	1	$ 83.00
	004949	Replacement Box Cover (60 G2)	1	$ 87.10
	010286	Replacement Box Cover (65 G2)	1	$ 89.45
11	001220	27" TP Hinge Tube Spring Holders (no spring)	1	$ 50.25
	008025	Torsion Spring Kit (54)	1	$ 64.40
	008083	Torsion Spring Kit (54) Deep Platform	1	$ 64.40
	008026	Torsion Spring Kit (60)	1	$ 64.40
	008084	Torsion Spring Kit (60) Deep Platform	1	$ 64.40
	008027	Torsion Spring Kit (65)	1	$ 64.40
	008085	Torsion Spring Kit (65) Deep Platform	1	$ 64.40
12	002181	3/4" Replacement G2 Upright Back Arm Pin & Bushing	2	$ 36.35
13	000992	Replacement Copper Lug	6	$ 4.15
14	000998	Replacement 150 Amp Manual Reset Circuit Breaker	1	$ 61.10
15	002015	Replacement G2 Upright Cap	2	$ 10.15
17	000967	Replacement Raise Solenoid-3 Post	1	$ 58.45
18	011310	Replacement 1342 G2 Pump & Motor Unit (2300psi)	1	$ 522.00
	011311	Replacement 1542 G2 Pump & Motor Unit (2600psi)	1	$ 522.00
	011312	Replacement 1642 G2 Pump & Motor Unit (2750psi)	1	$ 522.00
	014347	Replacement 1342 G2 Pump & Motor Unit (2750psi) 24V	1	$ 627.00
19	000971	Replacement G2 Cylinder	2	$ 350.00
20	000989	Replacement Vent Plug	1	$ 4.15
21	001138	G2 Cylinder Repair Kit (after serial # 470166M)	2	$ 92.35
22	000972	Replacement Split Plastic Grommet Kit	2	$ 4.15
23	002143	Replacement G2 Sub Assembly Belting	2	$ 16.40
25	001211	Replacement G2 Cylinder Shaft Complete (40/42) (after serial # 470166M)	2	$ 259.00
30	000973	Replacement Monarch Lee Check Valve (after serial # M-335705 1000# & 1300#) (after serial # M16-26635 1600#)	1	$ 29.95
31	000974	Replacement G2 T-Fitting (Pump & Motor)	1	$ 23.50
32	000975	Replacement 1/4"X21" Hydraulic Hose-Left (G2)	1	$ 29.70
33	000976	Replacement 1/4"x52" Hydraulic Hose-Right (54 & 60 G2)	1	$ 43.75
	000977	Replacement 1/4"x56.63" Hydraulic Hose-Right (65 G2)	1	$ 48.85

1342, 1542 & 1642 G2 SERIES PARTS PRICE LIST

Draw. Ref.	Part No.	Description	Qty Required	Sugg. Retail (Each)
34	000978	Replacement 1/4"x1/4"x90 Degree Steel Cylinder Elbow	2	$ 6.25
36	003249	Replacement Cylinder Barrel (after serial # 470166M)	2	$ 213.00
37	004570	Replacement 4 Ga. 2 Wire Electric Cable w/Lugs-26 ft.	1	$ 103.00
38	000957	Replacement 1.5qt. Monarch Plastic Tank (G2) **	1	$ 62.25
39	000987	Replacement Fixed Control	1	$ 129.00
40	000979	Replacement Vent Plug - Cylinder (Rail & G2)	2	$ 4.15
41	010199	Replacement License Plate Light & Bracket (H1)	1	$ 23.25
42	000958	Replacement 12 Volt Motor-Only (Monarch)**	1	$ 298.00
43	002183	3/4" Replacement G2 Upright Front Arm Pin	4	$ 33.45
44	009645	Release Solenoid External Assembly w/Connector	1	$ 96.75
45	013360	Replacement Flow Control W/ O-ring (G2) (With Adaptor)	2	$ 43.00
47	N/A	Replacement Pump (only) w/1.5qt. Tank 1342 G2 (2300psi) (Discontinued - See Drawing Ref 18)	1	N/A
	N/A	Replacement Pump (only) w/1.5qt. Tank 1542 G2 (2600psi) (Discontinued - See Drawing Ref 18)	1	N/A
	N/A	Replacement Pump (only) w/1.5qt. Tank 1642 G2 (2750psi) (Discontinued - See Drawing Ref 18)	1	N/A
50	002017	G2 Replacement Latch Kit	2	$ 34.25
	014268	G2 Low Profile Replacement Latch Kit (Model 73-92 & EA65)	2	$ 34.25
51	002020	Replacement Platform Latch Pin Assembly (G2)	2	$ 8.95
54	000960	G2 54-F11+4 Replacement Treadplate Flipper	1	$ 255.00
	000961	G2 54-F11+7 Replacement Treadplate Flipper	1	$ 316.00
	001881	54-F11 Replacement EA Flipper	1	$ 388.00
	000962	G2 60-F11+4 Replacement Treadplate Flipper	1	$ 260.00
	000963	G2 60-F11+7 Replacement Treadplate Flipper	1	$ 340.00
	001882	60-F11 Replacement EA Flipper	1	$ 402.00
	001883	65-F11 Replacement EA Flipper	1	$ 447.00
55	001010	G2 Replacement Drop Away Pin Assembly	1	$ 6.25
56	000966	Replacement Padlock w/Keys	1	$ 9.65
61	004712	EA Replacement Platform Chain Pin (1.079")	2	$ 9.50
62	004717	EA Replacement Flipper Rivet	2	$ 11.20
81	006514	Replacement Cloth Chain Cover 20"	2	$ 13.00
	006516	Replacement Cloth Chain Cover 29"	2	$ 13.00

**Please provide the liftgate Model and Serial numbers when ordering repair parts.
Note: The above prices are for standard equipment only. Call the factory for pricing of optional equipment or special features.

1650 SERIES G2 PARTS DRAWING

FOR MODELS 65, 73, 81, 87, 92

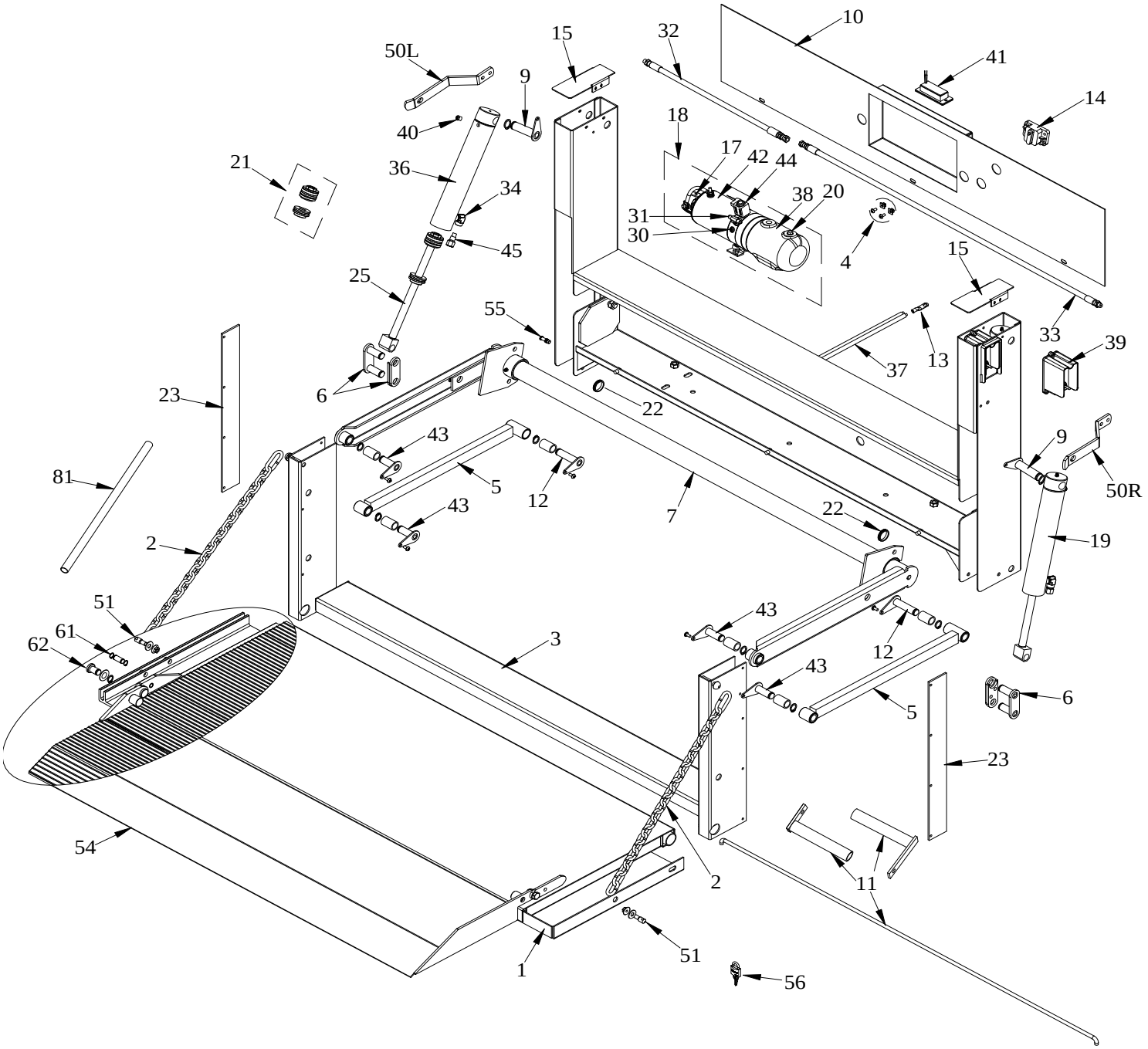

1650LD G2 PARTS DRAWING

FOR MODELS 73LD, 81LD, 87LD, 92LD

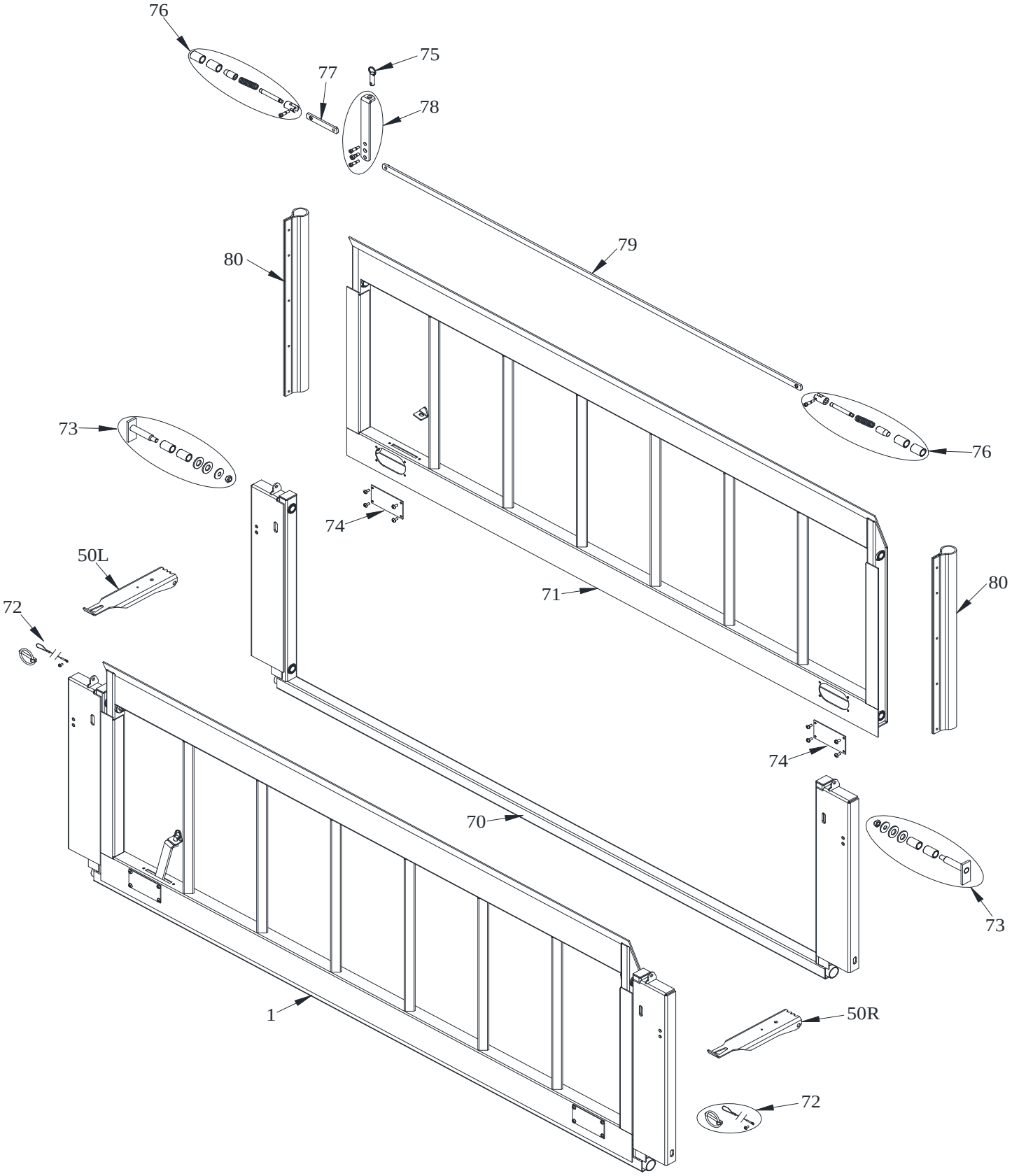

1650 G2 SERIES PARTS PRICE LIST

Draw. Ref.	Part No.	Description	Qty Required	Sugg. Retail (Each)
1	010280	(65) G2 35" Treadplate Replacement Platform	1	$ 615.00
	010281	(65) G2 41" Treadplate Replacement Platform	1	$ 944.00
	010282	(65) G2 37" Extruded Aluminum Replacement Platform	1	$ 1,156.00
	010283	(65) G2 41" Extruded Aluminum Replacement Platform	1	$ 1,508.00
	002585	(73) G2 35" Treadplate Replacement Platform	1	$ 675.00
	002590	(73) G2 41" Treadplate Replacement Platform	1	$ 1,004.00
	002591	(73) G2 37" Extruded Aluminum Replacement Platform	1	$ 1,327.00
	002599	(73) G2 41" Extruded Aluminum Replacement Platform	1	$ 1,676.00
	010452	(73) G2 Lift and Dump Replacement Platform	1	$ 1,029.00
	002523	(81) G2 35" Treadplate Replacement Platform	1	$ 731.00
	002524	(81) G2 41" Treadplate Replacement Platform	1	$ 1,060.00
	002525	(81) G2 37" Extruded Aluminum Replacement Platform	1	$ 1,478.00
	002526	(81) G2 41" Extruded Aluminum Replacement Platform	1	$ 1,827.00
	010453	(81) G2 Lift and Dump Replacement Platform	1	$ 1,053.00
	002527	(87) G2 35" Treadplate Replacement Platform	1	$ 753.00
	002528	(87) G2 41" Treadplate Replacement Platform	1	$ 1,082.00
	002529	(87) G2 37" Extruded Aluminum Replacement Platform	1	$ 1,533.00
	002530	(87) G2 41" Extruded Aluminum Replacement Platform	1	$ 1,883.00
	010454	(87) G2 Lift and Dump Replacement Platform	1	$ 1,074.00
	014612	(87) G2 33+6" Tommy Traction Replacement Platform	1	$ 900.00
	013929	(87) G2 33+6" Bargrate Replacement Platform	1	$ 1,001.00
	002531	(92) G2 35" Treadplate Replacement Platform	1	$ 766.00
	002532	(92) G2 41" Treadplate Replacement Platform	1	$ 1,095.00
	002533	(92) G2 37" Extruded Aluminum Replacement Platform	1	$ 1,581.00
	002534	(92) G2 41" Extruded Aluminum Replacement Platform	1	$ 1,931.00
	013627	(92) G2 33+6" Bargrate Replacement Platform	1	$ 1,015.00
	014219	(92) G2 33+6" Tommy Traction Replacement Platform	1	$ 917.00
	010455	(92) G2 Lift and Dump Replacement Platform	1	$ 1,091.00
2	013649	35+6TP, 33+6TT, & 33+6BG Platform Replacement Chain	2	$ 50.70
	013650	37+6EA & 41+6EA Replacement Platform Chain	2	$ 52.85
	013651	41+6TP Replacement Platform Chain	2	$ 62.50
3	013632	60-50 G2 Replacement Sub Assembly	1	$ 360.00
	010284	65-50 G2 Replacement Sub Assembly	1	$ 396.00
	002535	73-50 G2 Replacement Sub Assembly	1	$ 430.00
	002536	81-50 G2 Replacement Sub Assembly	1	$ 447.00
	002537	87-50 G2 Replacement Sub Assembly	1	$ 463.00
	002538	92-50 G2 Replacement Sub Assembly	1	$ 477.00
	010456	73LD G2 Replacement Sub Assembly	1	$ 517.00
	010457	81LD G2 Replacement Sub Assembly	1	$ 525.00
	010458	87LD G2 Replacement Sub Assembly	1	$ 540.00
	010459	92LD G2 Replacement Sub Assembly	1	$ 557.00
4	001111	License Plate Mount Kit	1	$ 4.15
5	002539	G2 (50) Replacement Lower Arm w/Pins & Bushings	2	$ 120.00
6	002540	G2 (50) Replacement Clevis Cylinder Assembly	2	$ 53.75
7	013633	60-50 G2 Replacement Upper Arm Assembly	1	$ 540.00
	010285	65-50 G2 Replacement Upper Arm Assembly	1	$ 580.00
	002541	73-50 G2 Replacement Upper Arm Assembly	1	$ 622.00
	002542	81-50 G2 Replacement Upper Arm Assembly	1	$ 676.00
	002543	87-50 G2 Replacement Upper Arm Assembly	1	$ 713.00
	002544	92-50 G2 Replacement Upper Arm Assembly	1	$ 743.00
9	002180	7/8" Replacement G2 Upright Back Cylinder Pin	2	$ 33.30
10	013662	Replacement Box Cover (60G2)	1	$ 87.10
	010286	Replacement Box Cover (65G2)	1	$ 89.45
	002549	Replacement Box Cover (73G2)	1	$ 91.70
	002551	Replacement Box Cover (81G2)	1	$ 95.75
	002553	Replacement Box Cover (87G2)	1	$ 97.80
	002555	Replacement Box Cover (92G2)	1	$ 101.00
11	010288	Torsion Spring Kit (65) Steel Platform	1	$ 64.40
	008085	EA Torsion Spring Kit (65)	1	$ 64.40
	008028	Torsion Spring Kit (73) Steel Platform	1	$ 64.40
	008116	EA Torsion Spring Kit (73)	1	$ 64.40
	008117	SQ. Torsion Spring Kit (81)	1	$ 112.00
	008029	EA Torsion Spring Kit (81)	1	$ 64.40
	008118	SQ. Torsion Spring Kit (87)	1	$ 112.00
	008032	EA Torsion Spring Kit (87)	1	$ 64.40
	008119	SQ. Torsion Spring Kit (92)	1	$ 112.00
	008033	EA Torsion Spring Kit (92)	1	$ 64.40
12	002181	3/4" Replacement G2 Upright Back Arm Pin & Bushing	2	$ 36.35
13	000992	Replacement Copper Lug	6	$ 4.15

1650 G2 SERIES PARTS PRICE LIST

Draw. Ref.	Part No.	Description	Qty Required	Sugg. Retail (Each)
14	000998	Replacement 150 Amp Manual Reset Circuit Breaker	1	$ 61.10
15	002015	Replacement G2 Upright Cap	2	$ 10.15
17	000967	Replacement Raise Solenoid-3 Post	1	$ 58.45
18	013265	Replacement 1350 G2 Pump & Motor Unit (2300psi)	1	$ 522.00
	002558	Replacement 1650 G2 Pump & Motor Unit (2500psi)	1	$ 522.00
19	002559	Replacement G2 Cylinder (50)	2	$ 519.00
20	000989	Replacement Vent Plug	1	$ 4.15
21	001138	G2 Cylinder Repair Kit	2	$ 92.35
22	000972	Replacement Split Plastic Grommet Kit	2	$ 4.15
23	002560	Replacement G2 Sub Assembly Belting (50)	2	$ 22.75
25	002561	Replacement G2 Cylinder Shaft Complete (50)	2	$ 281.00
30	000973	Replacement Monarch Lee Check Valve	1	$ 29.95
31	000974	Replacement G2 T-Fitting (Pump & Motor)	1	$ 23.50
32	002578	Replacement 1/4"X26-1/4" Hydraulic Hose-Left (G2)	1	$ 34.80
33	002579	Replacement 1/4"x66-3/4" Hydraulic Hose-Right (65-73G2)	1	$ 53.90
	002580	Replacement 1/4"x80-3/4" Hydraulic Hose-Right (81-87G2)	1	$ 55.65
	002581	Replacement 1/4"x85-3/4" Hydraulic Hose-Right (92G2)	1	$ 56.70
34	000978	Replacement 1/4"x1/4"x90 Degree Steel Cylinder Elbow	2	$ 6.25
37	004708	Replacement 4 Ga. 2 Wire Electric Cable w/Lugs-33 ft.	1	$ 130.00
38	004355	Replacement 3qt. Monarch Plastic Tank (G2) **	1	$ 62.25
39	000987	Replacement Fixed Control	1	$ 129.00
40	000979	Replacement Vent Plug - Cylinder (Rail & G2)	2	$ 4.15
41	010199	Replacement License Plate Light & Bracket (H1)	1	$ 23.25
42	000958	Replacement 12 Volt Motor-Only (Monarch)**	1	$ 298.00
43	002183	3/4" Replacement G2 Upright Front Arm Pin	4	$ 33.45
44	009645	Release Solenoid External Assembly w/Connector	1	$ 96.75
45	013360	Replacement Flow Control W/ O-ring (G2) (With Adaptor)	2	$ 43.00
47	N/A	Replacement Pump (only) w/3qt. Tank 1650 G2 (2500psi) (Discontinued - See Drawing Ref 18)	1	N/A
50L	002583	G2 (50) Replacement Latch Kit-Left	1	$ 34.95
	010460	G2 (LD) Replacement Latch Kit-Left	1	$ 34.95
50R	002584	G2 (50) Replacement Latch Kit-Right	1	$ 34.95
	010461	G2 (LD) Replacement Latch Kit-Right	1	$ 34.95
51	002020	Replacement Platform Latch Pin Assembly (G2)	2	$ 8.95
55	001010	G2 Replacement Drop Away Pin Assembly	1	$ 6.25
56	000966	Replacement Padlock w/Keys	1	$ 9.65
61	004712	EA Replacement Platform Chain Pin(1.079")	2	$ 9.50
70	010462	G2 Replacement Outer Platform Assembly (73LD)	1	$ 274.00
	010463	G2 Replacement Outer Platform Assembly (81LD)	1	$ 279.00
	010464	G2 Replacement Outer Platform Assembly (87LD)	1	$ 281.00
	010465	G2 Replacement Outer Platform Assembly (92LD)	1	$ 287.00
71	009534	Replacement Platform Insert (73LD)	1	$ 700.00
	009541	Replacement Platform Insert (81LD)	1	$ 750.00
	009542	Replacement Platform Insert (87LD)	1	$ 781.00
	009543	Replacement Platform Insert (92LD)	1	$ 812.00
72	011701	Replacement Latch Pin & Lanyard (G2)	2	$ 13.15
73	009492	Replacement LD Insert Pivot Pin Assembly	2	$ 31.35
74	009494	Replacement LD Access Cover	2	$ 7.55
75	000913	Replacement 1/2"Dia.x1" Cotterless Hitch Pin	1	$ 7.15
76	009491	Replacement LD Insert Latch Pin Assembly	2	$ 43.75
77	009504	Replacement Short Insert Link Assembly (LND)	1	$ 20.95
78	009493	Replacement LD Insert Handle Assembly	1	$ 20.50
79	009514	Replacement Long Insert Link Assembly (73LND)	1	$ 63.90
	009517	Replacement Long Insert Link Assembly (81LND)	1	$ 63.90
	009518	Replacement Long Insert Link Assembly (87LND)	1	$ 63.90
	009519	Replacement Long Insert Link Assembly (92LND)	1	$ 63.90
80	010466	Replacement G2 LD Sub Assembly Seal Belting Kit	2	$ 38.50
81	006516	Replacement Cloth Chain Cover 29"	2	$ 13.00
	006596	Replacement Cloth Chain Cover 38"	2	$ 13.00

**Please provide the liftgate Model and Serial numbers when ordering repair parts.
Note: The above prices are for standard equipment only. Call the factory for pricing of optional equipment or special features.

1034, 1036, 1040 AND 1340 ORIGINAL SERIES
PARTS DRAWING

FOR MODELS 48, 54, 60, 64, 64P, 72P, 72S

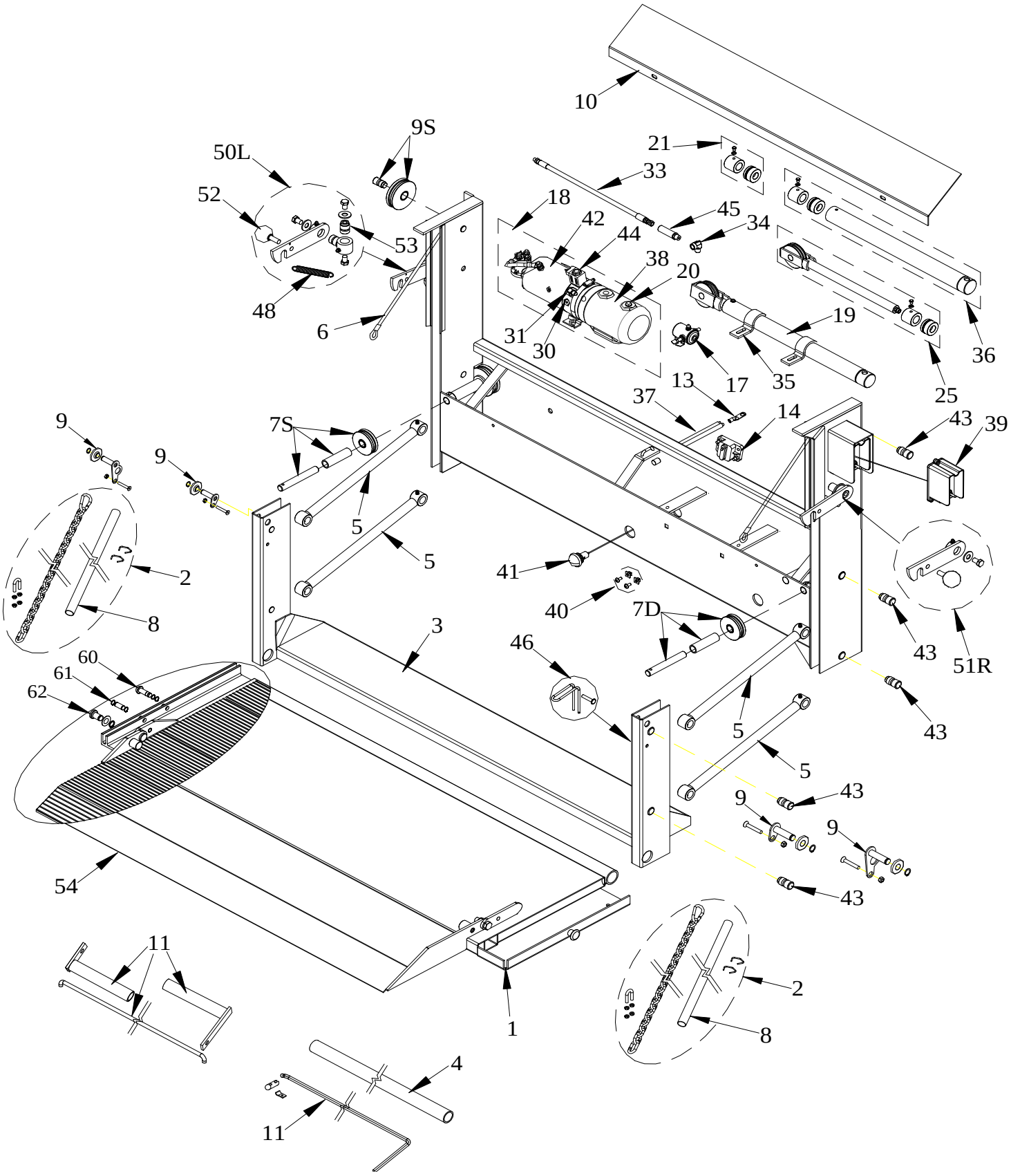

1034, 1036, 1040 AND 1340 ORIGINAL SERIES PARTS PRICE LIST

Draw. Ref.	Part No.	Description	Qty Required	Sugg. Retail (Each)
1	001643	Mini Treadplate Replacement Platform	1	$ 449.00
	001627	Mini w/F9 EA Replacement Platform	1	$ 963.00
	001644	Dakota & Isuzu Treadplate Replacement Platform	1	$ 472.00
	001628	Dakota w/F9 EA Replacement Platform	1	$ 1,009.00
	001645	60 Toyota Treadplate Replacement Platform	1	$ 503.00
	001629	60 Toyota w/F9 EA Replacement Platform	1	$ 1,072.00
	001646	48-1036 Treadplate Replacement Platform	1	$ 238.00
	001647	48-1036 w/F11 Treadplate Replacement Platform	1	$ 441.00
	001630	48 w/F11 EA Replacement Platform	1	$ 798.00
	004589	48 37+11+6 EA Replacement Platform	1	$ 1,074.00
	001650	54-1040 & 54-1340 Treadplate Replacement Platform	1	$ 252.00
	001651	54-1040 & 54-1340 w/F11 Treadplate Replacement Platform	1	$ 458.00
	001631	54 w/F11 EA Replacement Platform	1	$ 862.00
	004820	54 37+11+6 EA Replacement Platform	1	$ 1,140.00
	001654	60-1040 & 60-1340 Treadplate Replacement Platform	1	$ 276.00
	001655	60-1040 & 60-1340 Treadplate w/F11 Replacement Platform	1	$ 480.00
	001632	60 w/F11 EA Replacement Platform	1	$ 900.00
	004799	60 37+11+6 EA Replacement Platform	1	$ 1,176.00
	001648	64 Treadplate Replacement Platform	1	$ 290.00
	001649	64 w/F11 Treadplate Replacement Platform	1	$ 494.00
	001658	64-1340 Treadplate Replacement Platform	1	$ 308.00
	001659	64-1340 w/F11 Treadplate Replacement Platform	1	$ 514.00
	001633	64 w/F11 EA Replacement Platform	1	$ 941.00
	004798	64 37+11+6 EA Replacement Platform	1	$ 1,217.00
	001227	72P w/F11 Treadplate Replacement Platform	1	$ 552.00
	004559	72P w/F11 EA Replacement Platform	1	$ 1,022.00
	004565	72P/72S 37+11+6 EA Replacement Platform	1	$ 1,299.00
2	003840	TP 1034 Replacement Platform Chain	2	$ 35.55
	003846	1034 EA Replacement Platform Chain	2	$ 35.55
	003841	1036-1040 Replacement Platform Chain (54-1040 & 60-1040 before serial # 459225M)*	2	$ 42.30
	003847	36" & 40" Travel EA Replacement Platform Chain	2	$ 39.20
	003842	1340 Replacement Platform Chain (54-1040 & 60-1040 after serial # 462473M)*	2	$ 39.20
	003884	48" Deep & 50" Travel EA Replacement Platform Chain	2	$ 54.45
3	003551	Mini Replacement Sub Assembly	1	$ 210.00
	003588	Mini EA Replacement Sub Assembly	1	$ 210.00
	003552	48 Replacement Sub Assembly	1	$ 210.00
	003589	48EA Replacement Sub Assembly	1	$ 210.00
	003553	Dakota & Isuzu Replacement Sub Assembly	1	$ 218.00
	003590	Dakota EA Replacement Sub Assembly	1	$ 218.00
	003554	54 Replacement Sub Assembly	1	$ 218.00
	003591	54EA Replacement Sub Assembly	1	$ 218.00
	003549	60 Toyota Replacement Sub Assembly	1	$ 231.00
	003592	60 Toyota EA Replacement Sub Assembly	1	$ 231.00
	003556	60 Replacement Sub Assembly	1	$ 231.00
	003593	60EA Replacement Sub Assembly	1	$ 231.00
	003558	64 Replacement Sub Assembly	1	$ 239.00
	003594	64EA Replacement Sub Assembly	1	$ 239.00
	003584	72P Replacement Sub Assembly	1	$ 252.00
	003169	72P/72S EA Replacement Sub Assembly	1	$ 252.00
4	006425	48 & Mini Replacement Hinge Tube - Steel Platform	1	$ 32.75
	006426	54, Dakota & Isuzu Replacement Hinge Tube - Steel Platform	1	$ 32.75
	006427	60 & Toyota Replacement Hinge Tube - Steel Platform	1	$ 32.75
	006428	64 Replacement Hinge Tube - Steel Platform	1	$ 32.75
	006429	72 Replacement Hinge Tube - Steel Platform		$ 38.45
5	007010	1034-1036 Replacement Lift Arm w/Pins & Zerks	4	$ 50.05
	001125	1040-1340 Replacement Lift Arm w/Pins & Zerks	4	$ 50.05
6	010450	Set 7/32" Replacement Lift Cable Kit (Mini Only)	1	$ 96.60
	003123	Set 7/32" Replacement Lift Cable Kit (Model 60 Only)	1	$ 96.60
	002939	Universal Set 7/32" Replacement Lift Cable Kit (Not for Mini)	1	$ 117.00
7D	004175	3" Double (7/32") Groove Replacement Pulley Kit with 3/4" Cross Box Pin (60-1040 before serial # 459225M)*	1	$ 32.70
	004179	3.5" Double (7/32") Groove Replacement Pulley Kit with 7/8" Cross Box Pin (60-1040 after serial # 462473M)*	1	$ 32.70
7S	004176	3" Single (7/32") Groove Replacement Pulley Kit with 3/4" Cross Box Pin(60-1040 before serial # 459225M)*	1	$ 32.70
	004180	3.5" Single (7/32") Groove Replacement Pulley Kit with 7/8" Cross Box Pin (60-1040 after serial # 462473M)*	1	$ 32.70
8	006515	Replacement Cloth Chain Cover 17"	2	$ 13.00
	006514	Replacement Cloth Chain Cover 20"	2	$ 13.00
	006516	Replacement Cloth Chain Cover 29"	2	$ 13.00
9	010512	Drop Pin Assembly Kit (Set of 2) (36-50" Travel)	1	$ 26.90
	010513	Drop Pin Assembly Kit (Set of 2) (Mini)	1	$ 26.90
9S	004177	3" Single (7/32") Groove Replacement Pulley Kit with 3/4" Upright Pin	2	$ 26.25
10	004961	Replacement Box Cover (Mini & 48)	1	$ 29.35
	004962	Replacement Box Cover (Dakota, Isuzu & 54)	1	$ 32.75
	004963	Replacement Box Cover (Toyota T-100 & 60)	1	$ 36.45
	004964	Replacement Box Cover (64)	1	$ 39.35
	004965	Replacement Box Cover (72)	1	$ 43.20
11	003688	Torsion Spring w/Hardware (Mini & 48)	1	$ 36.75
	008024	EA Torsion Spring Kit (48)	1	$ 64.40
	008082	EA 37+11+6 Torsion Spring Kit (48)	1	$ 64.40
	003689	Torsion Spring w/Hardware (Dakota, Isuzu & 54)	1	$ 36.75
	008025	EA Torsion Spring Kit (54)	1	$ 64.40
	008083	EA 37+11+6 Torsion Spring Kit (54)	1	$ 64.40
	003690	Torsion Spring w/Hardware (Toyota T-100 & 60)	1	$ 36.75
	008026	EA Torsion Spring Kit (60)	1	$ 64.40
	008084	EA 37+11+6 Torsion Spring Kit (60)	1	$ 64.40
	003691	Torsion Spring Kit (64)	1	$ 36.75
	008027	EA Torsion Spring Kit (64)	1	$ 64.40
	008085	EA 37+11+6 Torsion Spring Kit (64)	1	$ 64.40
	003692	Torsion Spring Kit (72)	1	$ 36.75
	008028	EA Torsion Spring Kit(72)	1	$ 64.40
	008116	EA 37+11+6 Torsion Spring Kit (72P & 72S)	1	$ 64.40
13	000992	Replacement Copper Lug	6	$ 4.15
14	000998	Replacement 150 Amp Manual Reset Circuit Breaker	1	$ 61.10

1034, 1036, 1040 AND 1340 ORIGINAL SERIES PARTS PRICE LIST

Draw. Ref.	Part No.	Description	Qty Required	Sugg. Retail (Each)
17	000967	Replacement Raise Solenoid-3 Post	1	$ 58.45
18	004360	M319 Replacement Pump & Motor (2100psi) 1.5qt.** Mini 500	1	$ 522.00
	007031	M319 Replacement Pump & Motor (2800psi) 1.5qt.** (54-1040 & 60-1040 after serial # 462473M)*	1	$ 522.00
	004362	M319 Replacement Pump & Motor (3800psi) 1.5qt.** 1034,1036,1040(54-1040 & 60-1040 before serial # 459225M)*	1	$ 522.00
	004363	M319 Replacement Pump & Motor (3400psi) 1.5qt.** 1340	1	$ 522.00
19	009756	1034 & 1036 Replacement Cylinder	1	$ 266.00
	009761	1040 Replacement Cylinder (54-1040 & 60-1040 before serial # 459225M)*	1	$ 284.00
	009762	1340 Replacement Cylinder (54-1040 & 60-1040 after serial # 462473M)*	1	$ 305.00
20	000989	Replacement Vent Plug	1	$ 4.15
21	001139	1-1/2" Cylinder Repair Kit (54-1040 & 60-1040 before serial # 459225M*, all 1034, all 1036) Includes: Piston, Guide Bushing & O-rings	1	$ 34.65
	001140	1-3/4" Cylinder Repair Kit (54-1040 & 60-1040 after serial # 462473M*, all 1046, all 1340) Includes: Piston, Guide Bushing & O-rings	1	$ 39.95
25	003224	Cylinder Shaft w/Pulley Assembly (1034 & 1036) Includes: Cylinder Repair Kit	1	$ 136.00
	003222	Cylinder Shaft w/Pulley Assembly (1040) Includes: Cylinder Repair Kit (54-1040 & 60-1040 before serial # 459225M)*	1	$ 136.00
	003227	Cylinder Shaft w/Pulley Assembly (1340) Includes: Cylinder Repair Kit (54-1040 & 60-1040 after serial # 462473M)*	1	$ 162.00
30	000973	Replacement Monarch Lee Check Valve (after serial # M05-1514 500#) (after serial # M-336052 1000# & 1300#)	1	$ 29.95
31	000944	Replacement 90 Degree Elbow (Male 9/16 O-ring Boss x Female 1/4 NPTF)	1	$ 15.40
	000945	Replacement 90 Degree Elbow (Male 3/8 NPTF x Female 1/4 NPTF)	1	$ 6.25
	012611	Replacement 90 Degree Elbow (Male 9/16 ORB x Male 7/16 JIC)	1	$ 10.55
33	012679	Replacement 1/4"x29" Hydraulic Hose w/ Adapters (Mini & 48)	1	$ 45.15
	012680	Replacement 1/4"x37" Hydraulic Hose w/ Adapters (54 & 60-1340)	1	$ 45.15
	012681	Replacement 1/4"x40" Hydraulic Hose w/ Adapters (T-100 & 60)	1	$ 45.15
	012682	Replacement 1/4"x44" Hydraulic Hose w/ Adapters (64)	1	$ 47.20
	012683	Replacement 1/4"x48" Hydraulic Hose w/ Adapters (72P/72S & 650)	1	$ 47.20
34	000978	Replacement 1/4"x1/4"x90 Degree Steel Cylinder Elbow	1	$ 6.25
	000916	Replacement 1/4"x7/16"x90 Degree Steel Cylinder Elbow	1	$ 10.55
	013073	Replacement 90 Degree Elbow (Male 7/16 ORB x Female 7/16 ORB)	1	$ 10.55
35	006832	1-1/2" Replacement Cylinder Clamp (1034-1040) (54-1040 & 60-1040 before serial # 459225M)*	1	$ 8.20
	006833	1-3/4" & 2" Replacement Cylinder Clamp (1340-1650) (54-1040 & 60-1040 after serial # 462473M)*	1	$ 8.20
36	003250	Replacement Cylinder Barrel Assembly (1034-1036) Includes: Cylinder Repair Kit	1	$ 144.00
	003251	Replacement Cylinder Barrel Assembly (1040) Includes: Cylinder Repair Kit (54-1040 & 60-1040 before serial # 459225M)*	1	$ 151.00
	003252	Replacement Cylinder Barrel Assembly (1340) Includes: Cylinder Repair Kit (1340-1650) (54-1040 & 60-1040 after serial # 462473M)*	1	$ 193.00
37	004570	Replacement 4Ga. 2 Wire Electric Cable w/Lugs-26 ft.	1	$ 103.00
38	000957	Replacement Monarch Plastic Tank (1.5qt.)**	1	$ 62.25
39	000987	Replacement Fixed Control	1	$ 129.00
40	001111	License Plate Mount Kit	1	$ 4.15
41	000949	Replacement Original Series License Plate Light	2	$ 6.25
42	000958	Replacement 12 Volt Motor-Only (Monarch)**	1	$ 298.00
43	007545	3/4" Arm Pin w/Zerk (before serial # M-83394)	10	$ 6.25
	000951	Replacement 3/4"x1-1/2" Arm Pin (after serial # M-83393)	10	$ 6.25
	007547	7/8" Arm Pin w/Zerk (before serial # M-82341-1000#&1300#) (before serial # M16-13066-1600#)	10	$ 6.25
	000952	Replacement 7/8" Arm Pin (after serial # M-82340-1000#&1300#) (after serial # M16-13065-1600#)	10	$ 6.25
44	009645	Release Solenoid External Assembly w/Connector	1	$ 96.75
45	012749	Replacement Flow Control (7/16 M x 7/16 F x 0.078) w/ Adapters for (1/4 M x 1/4 F x 0.078)	1	$ 51.40
46	003818	Replacement Kickaway Spring w/Pin	2	$ 8.55
47	N/A	Replacement M319 Pump (only) w/2qt. Tank (2100psi)** Mini-500 (Discontinued - See Drawing Ref 18)	1	N/A
	N/A	Replacement M319 Pump (only) w/1.5qt. Tank (2800psi)** (Discontinued - See Drawing Ref 18)	1	N/A
	N/A	Replacement M319 Pump (only) w/1.5qt. Tank (3800psi)** 1034,1036,1040 (Discontinued - See Drawing Ref 18)	1	N/A
	N/A	Replacement M319 Pump (only) w/1.5qt. Tank (3400psi)** 1340 (Discontinued - See Drawing Ref 18)	1	N/A
48	000954	Replacement Latch Spring	1	$ 4.15
50L	001070	Driver's Side Latch Kit (swing away)	1	$ 34.65
	001107	Driver's Side Latch Kit EA (swing away)	1	$ 36.60
51R	001071	Passenger's Side Latch Kit (fixed)	1	$ 20.50
52	000955	Replacement Latch Knob w/Stud	2	$ 6.25
53	007516	Replacement Threaded Latch Bushing	2	$ 6.25
54	001792	Mini-F7 Treadplate Flipper Boxed	1	$ 255.00
	001796	Mini-F9 Replacement EA Flipper	1	$ 361.00
	001793	Dakota & Isuzu-F7 Treadplate Flipper Boxed	1	$ 255.00
	001797	Dakota & Isuzu F9 Replacement EA Flipper	1	$ 361.00
	001794	T-100-F7 Treadplate Flipper Boxed	1	$ 255.00
	001798	60 Toyota F9 Replacement EA Flipper	1	$ 361.00
	001678	48-F11 Treadplate Flipper Boxed	1	$ 255.00
	001880	48-F11 Replacement EA Flipper	1	$ 361.00
	001679	54-F11 Treadplate Flipper Boxed	1	$ 255.00
	001881	54-F11 Replacement EA Flipper	1	$ 388.00
	001680	60-F11 Treadplate Flipper Boxed	1	$ 255.00
	001882	60-F11 Replacement EA Flipper	1	$ 402.00
	001681	64-F11 Treadplate Flipper Boxed	1	$ 255.00
	001883	64-F11 Replacement EA Flipper	1	$ 447.00
	001774	72P-F11 Treadplate Flipper Boxed	1	$ 255.00
	002520	72P/72S-F11 Replacement EA Flipper	1	$ 501.00
55	000956	Replacement (64) Grip Tape Kit For Platform	1	$ 71.45
56	000966	Replacement Padlock w/Keys	1	$ 9.65
60	004713	EA Replacement Latch Rivet(1.5")	2	$ 10.90
61	004712	EA Replacement Platform Chain Pin(1.079")	2	$ 9.50
62	004717	EA Replacement Flipper Rivet	2	$ 11.20

**Please provide the liftgate Model and Serial numbers when ordering repair parts.
Note: The above prices are for standard equipment only. Call the factory for pricing of optional equipment or special features.

* For model 54 and 60 gates that have a serial number that falls between 00459225M and 00462473M please contact the factory and receive instructions on measurements required to properly determine repair parts.

1/11/2017

OLD 1046, 1346, 1348, 1350, 1646, 1648 AND 1650 ORIGINAL SERIES PARTS DRAWING

(Before Serial # M-341000 1000# & 1300#) (Before Serial # M16-28000 1600#)
FOR MODELS 64SB, 72, 80, 86 & 91

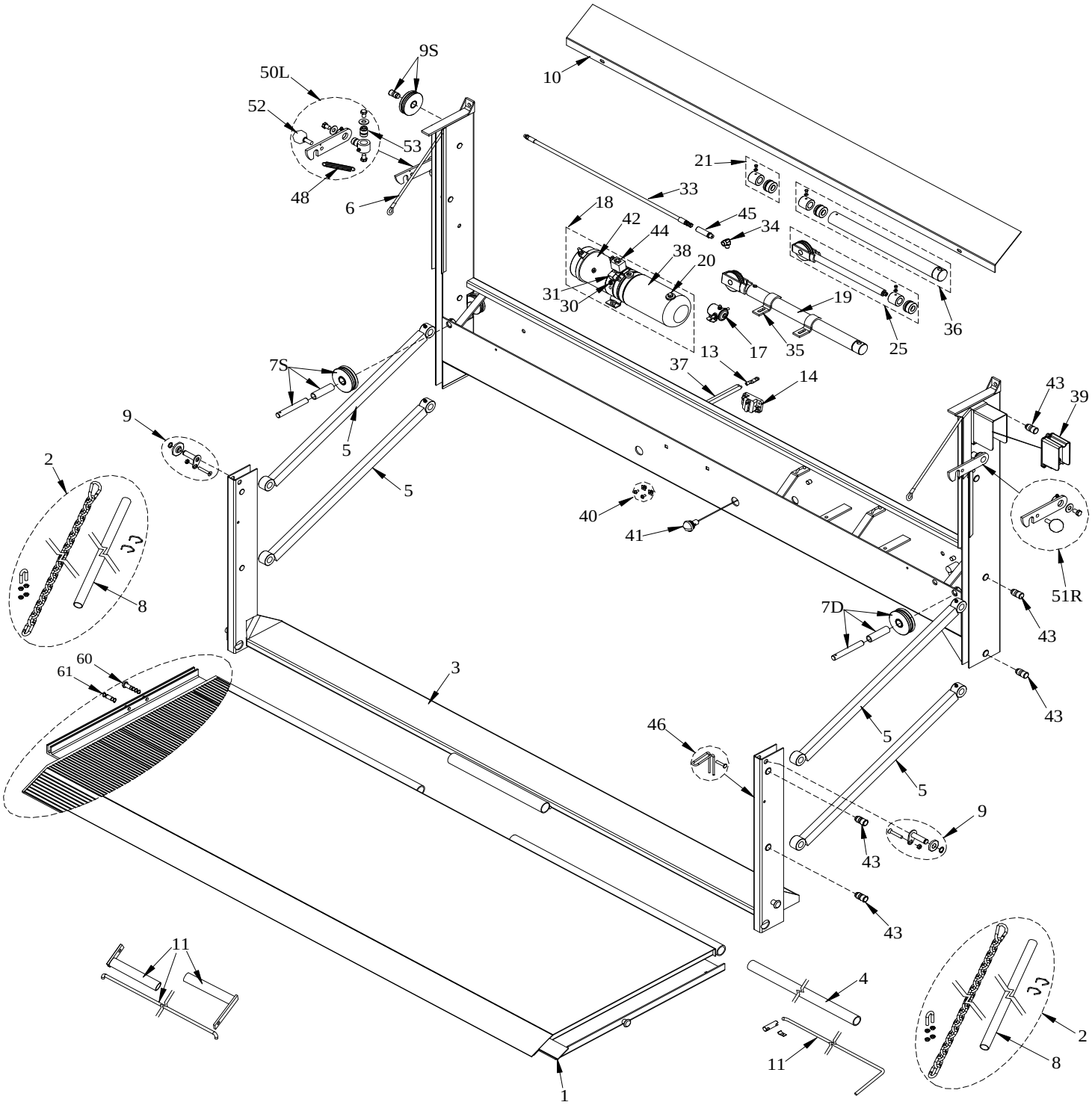

OLD 1046LD, 1346LD, 1348LD, 1350LD, 1646LD, 1648LD AND 1650LD
ORIGINAL SERIES PARTS DRAWING

(Before Serial # M-340978 1000# & 1300#) (Before Serial # M16-27979)

FOR MODELS 72LD, 80LD, 86LD & 91LD

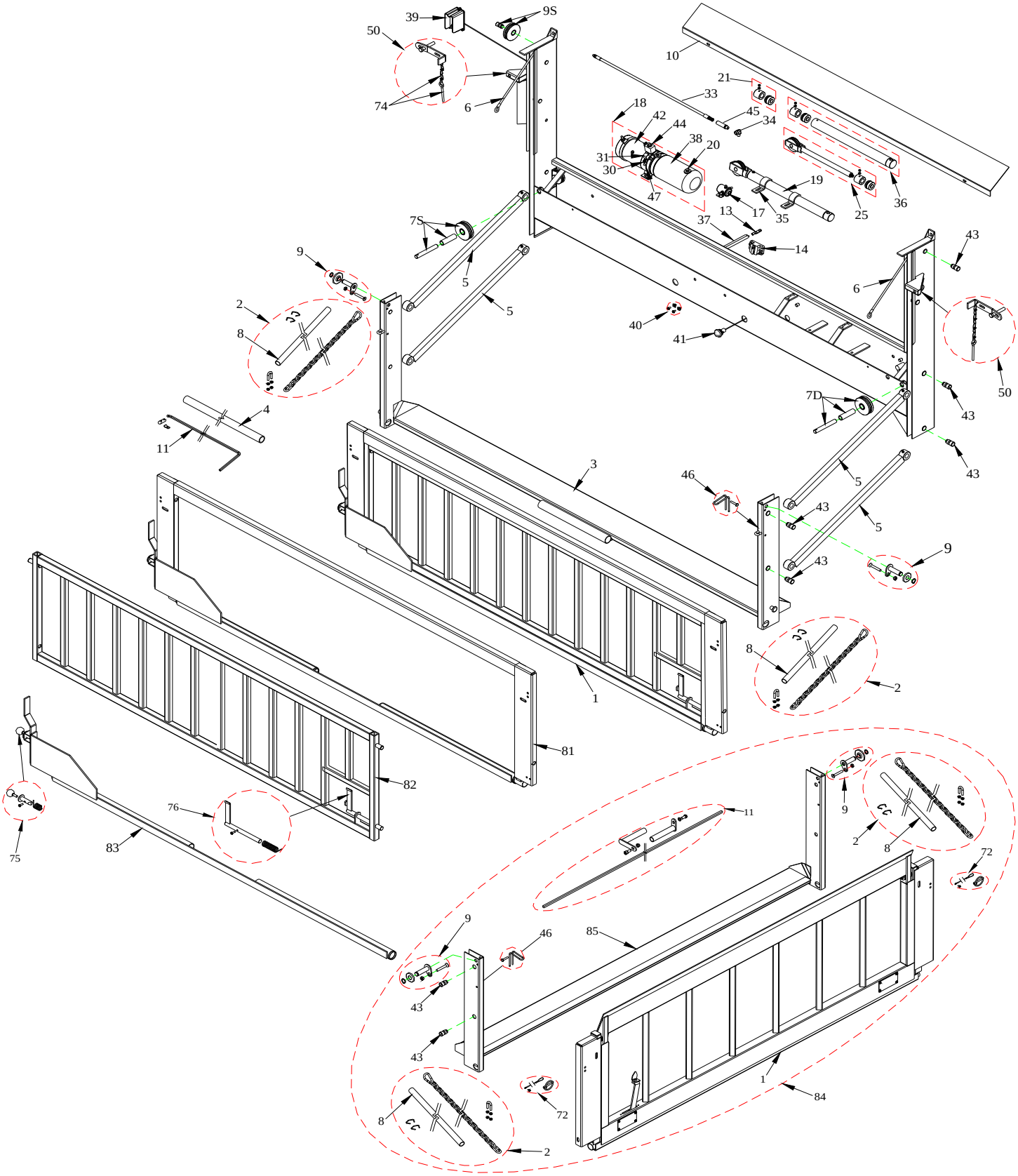

OLD 1046, 1346, 1348, 1350, 1646, 1648, 1650 AND LD ORIGINAL SERIES PARTS PRICE LIST

Draw. Ref.	Part No.	Description	Qty Required	Sugg. Retail (Each)
1	001660	(64SB) 36" Treadplate Replacement Platform	1	$ 615.00
	001638	64SB EA Replacement Platform	1	$ 1,156.00
	001661	(72) 36" Treadplate Replacement Platform	1	$ 675.00
	001639	72 EA Replacement Platform	1	$ 1,327.00
	001662	(80) 36" Treadplate Replacement Platform	1	$ 731.00
	001640	80 EA Replacement Platform	1	$ 1,478.00
	001663	(86) 36" Treadplate Replacement Platform	1	$ 753.00
	001641	86 EA Replacement Platform	1	$ 1,533.00
	001664	(91) 36" Treadplate Replacement Platform	1	$ 766.00
	001642	91 EA Replacement Platform	1	$ 1,581.00
	N/A	(72) LD Treadplate Replacement Platform (Discontinued - See Drawing Ref 84)	1	N/A
	N/A	(80) LD Treadplate Replacement Platform (Discontinued - See Drawing Ref 84)	1	N/A
	N/A	(86) LD Treadplate Replacement Platform (Discontinued - See Drawing Ref 84)	1	N/A
	N/A	(91) LD Treadplate Replacement Platform (Discontinued - See Drawing Ref 84)	1	N/A
	009488	(72) LD Treadplate Replacement Platform (New Style)	1	$ 1,029.00
	009489	(80) LD Treadplate Replacement Platform (New Style)	1	$ 1,053.00
	009553	(86) LD Treadplate Replacement Platform (New Style)	1	$ 1,074.00
	009552	(91) LD Treadplate Replacement Platform (New Style)	1	$ 1,091.00
2	003188	1046-1650 Replacement Platform Chain	2	$ 52.20
	003848	50" Travel EA Replacement Platform Chain (with 1.579" Pin)	2	$ 48.80
	003884	50" Travel EA Replacement Platform Chain (with 1.079" Pin)	2	$ 54.45
	N/A	1046LD-1650LD Replacement Platform Chain (Discontinued - See Drawing Ref 84)	2	N/A
	003849	40+8 Replacement Platform Chain	2	$ 65.30
3	003560	64SB Replacement Sub Assembly	1	$ 249.00
	003595	64SB EA Replacement Sub Assembly	1	$ 249.00
	003563	72 Replacement Sub Assembly	1	$ 249.00
	003596	72EA Replacement Sub Assembly	1	$ 249.00
	003568	80 Replacement Sub Assembly	1	$ 249.00
	003597	80EA Replacement Sub Assembly	1	$ 249.00
	003572	86 Replacement Sub Assembly	1	$ 325.00
	003598	86EA Replacement Sub Assembly	1	$ 325.00
	003576	91 Replacement Sub Assembly	1	$ 325.00
	003599	91EA Replacement Sub Assembly	1	$ 325.00
	N/A	72LD Replacement Sub Assembly (Discontinued - See Drawing Ref 84)	1	N/A
	N/A	80LD Replacement Sub Assembly (Discontinued - See Drawing Ref 84)	1	N/A
	N/A	86LD Replacement Sub Assembly (Discontinued - See Drawing Ref 84)	1	N/A
	N/A	91LD Replacement Sub Assembly (Discontinued - See Drawing Ref 84)	1	N/A
4	006428	64 Replacement Hinge Tube- Steel Platform	1	$ 32.75
	006429	72 Replacement Hinge Tube- Steel Platform	1	$ 38.45
	006430	80 Replacement Hinge Tube- Steel Platform	1	$ 48.85
	006431	86 Replacement Hinge Tube- Steel Platform	1	$ 48.85
	006432	91 Replacement Hinge Tube- Steel Platform	1	$ 48.85
5	001126	1046-1650 Replacement Lift Arm w/Pins & Zerks	4	$ 48.80
6	002939	Universal Set 7/32" Replacement Lift Cable Kit (Not for Mini)	1	$ 108.00
	003124	Universal Set 5/16" Replacement Lift Cable Kit	1	$ 193.00
7D	004181	4" Dia. Double (7/32") Groove Replacement Pulley Kit with 7/8" Cross Box Pin	1	$ 62.50
	004182	4" Dia. Double (5/16") Groove Replacement Pulley Kit with 7/8" Cross Box Pin	1	$ 62.50
7S	004185	4" Dia. Single (7/32") Groove Replacement Pulley Kit with 7/8" Cross Box Pin	1	$ 62.50
	004186	4" Dia. Single (5/16") Groove Replacement Pulley Kit with 7/8" Cross Box Pin	1	$ 62.50
8	006516	Replacement Cloth Chain Cover 29"	2	$ 13.00
	006596	Replacement Cloth Chain Cover 38"	2	$ 13.00
9	010512	Drop Pin Assembly Kit (Set of 2) (36-50" Travel)	1	$ 26.90
9S	004183	4" Single (7/32") Groove Replacement Pulley Kit with 7/8" Upright Pin	2	$ 53.15
	004184	4" Single (5/16") Groove Replacement Pulley Kit with 7/8" Upright Pin	2	$ 53.15
10	004964	Replacement Box Cover (64)	1	$ 39.35
	004965	Replacement Box Cover (72)	1	$ 43.20
	004966	Replacement Box Cover (80)	1	$ 48.45
	004967	Replacement Box Cover (86)	1	$ 51.95
	004968	Replacement Box Cover (91)	1	$ 55.10
11	003691	Torsion Spring Kit (64)	1	$ 36.75
	010288	EA Torsion Spring Kit (64) (except EA with 2-1/2" lid ends)	1	$ 64.40
	003692	Torsion Spring Kit (72)	1	$ 36.75
	008028	EA Torsion Spring Kit (72) (except EA with 2-1/2" lid ends)	1	$ 64.40
	003693	Torsion Spring Kit (80)	1	$ 36.75
	008117	EA Torsion Spring Kit (80) (except EA with 2-1/2" lid ends)	1	$ 112.00
	003694	Torsion Spring Kit (86)	1	$ 36.75
	008118	EA Torsion Spring Kit (86) (except EA with 2-1/2" lid ends)	1	$ 112.00
	003698	Old Style SQ. Torsion Spring Kit (86)	1	$ 94.00
	003695	Torsion Spring Kit (91)	1	$ 36.75
	008119	EA Torsion Spring Kit (91) (except EA with 2-1/2" lid ends)	1	$ 112.00
	003699	Old Style SQ. Torsion Spring Kit (91)	1	$ 94.00
13	000992	Replacement Copper Lug	6	$ 4.15
14	000998	Replacement 150 Amp Manual Reset Circuit Breaker	1	$ 61.10
17	000967	Replacement Raise Solenoid-3 Post	1	$ 58.45
18	004365	M319 Replacement Pump & Motor (2500psi) 3qt.** 1346 Thru 1350	1	$ 522.00
	004366	M319 Replacement Pump & Motor (3000psi) 3qt.** 1646 Thru 1650	1	$ 522.00
	004079	M319 Replacement Pump & Motor (3800psi) 3qt.** 1046	1	$ 522.00
19	009758	1046 Replacement Cylinder	1	$ 346.00
	009763	64SB-1346 Replacement Cylinder	1	$ 346.00
	009759	1348-1350 Replacement Cylinder	1	$ 346.00
	003432	64SB-1646 Replacement Cylinder	1	$ 346.00
	009754	1648-1650 Replacement Cylinder	1	$ 346.00
20	000989	Replacement Vent Plug	1	$ 4.15
21	001140	1-3/4" Cylinder Repair Kit (1046 & 1340) Includes Piston, Guide Bushing & O-rings	1	$ 39.95
	001141	2" Cylinder Repair Kit (1346-1650) Includes: Piston, Guide Bushing & O-rings	1	$ 68.65

OLD 1046, 1346, 1348, 1350, 1646, 1648, 1650 AND LD ORIGINAL SERIES PARTS PRICE LIST

Draw. Ref.	Part No.	Description	Qty Required	Sugg. Retail (Each)
25	3223	Cylinder Shaft w/Pulley Assembly (1046) Includes: Cylinder Repair Kit	1	$ 193.00
	3220	Cylinder Shaft w/Pulley Assembly (1346) Includes: Cylinder Repair Kit	1	$ 207.00
	3225	Cylinder Shaft w/Pulley Assembly (1348-1350) Includes: Cylinder Repair Kit	1	$ 207.00
	3228	Cylinder Shaft w/Pulley Assembly (1646) Includes: Cylinder Repair Kit	1	$ 223.00
	3226	Cylinder Shaft w/Pulley Assembly (1648-1650) Includes: Cylinder Repair Kit	1	$ 239.00
30	973	Replacement Monarch Lee Check Valve (after serial # M-336056 1000# & 1300#) (after serial # M16-26870 1600#)	1	$ 29.95
31	944	Replacement 90 Degree Elbow (Male 9/16 O-ring Boss x Female 1/4 NPTF)	1	$ 15.40
	945	Replacement 90 Degree Elbow (Male 3/8 NPTF x Female 1/4 NPTF)	1	$ 6.25
	12607	Replacement 90 Degree Elbow (Male 9/16 ORB x Female 9/16 ORB)	1	$ 10.55
	13073	Replacement 90 Degree Elbow (Male 7/16 ORB x Female 7/16 ORB)	1	$ 10.55
33	12682	Replacement 1/4" x 44" Hydraulic Hose w/ Adapters (64-1046)	1	$ 47.20
	12683	Replacement 1/4"x48" Hydraulic Hose w/ Adapters (72-1046 & 650)	1	$ 47.20
	12684	Replacement 1/4"x56" Hydraulic Hose w/ Adapters (80-1046)	1	$ 47.20
	12685	Replacement 1/4"x62" Hydraulic Hose w/ Adapters (86-1046)	1	$ 49.30
	12686	Replacement 1/4"x68" Hydraulic Hose w/ Adapters (91-1046)	1	$ 49.30
	12959	Replacement 1/4"x44" Hydraulic Hose w/ Adapters (64-1346-1646SB)	1	$ 47.20
	12960	Replacement 1/4"x48" Hydraulic Hose w/ Adapters (72-1348-1650)	1	$ 47.20
	12961	Replacement 1/4"x56" Hydraulic Hose w/ Adapters (80-1348-1650)	1	$ 47.20
	12962	Replacement 1/4"x62" Hydraulic Hose w/ Adapters (86-1348-1650)	1	$ 49.30
	12963	Replacement 1/4"x68" Hydraulic Hose w/ Adapters (91-1348-1650)	1	$ 49.30
34	978	Replacement 1/4"x1/4"x90 Degree Steel Cylinder Elbow	1	$ 6.25
	934	Replacement 3/8"x3/8"x90 Degree Cylinder Elbow	1	$ 6.25
	12611	Replacement 90 Degree Elbow (Male 9/16 ORB x Male 7/16 JIC)	1	$ 10.55
35	6832	1-1/2" Replacement Cylinder Clamp (1034-1040)	2	$ 8.20
	6833	1-3/4" & 2" Replacement Cylinder Clamp (1340-1650)	2	$ 8.20
36	3253	Replacement Cylinder Barrel Assembly (1046) Includes: Cylinder Repair Kit	1	$ 211.00
	3256	Replacement Cylinder Barrel Assembly (1346-1646) Includes: Cylinder Repair Kit	1	$ 270.00
	3254	Replacement Cylinder Barrel Assembly (1348-1650) Includes: Cylinder Repair Kit	1	$ 270.00
37	4708	Replacement 4Ga. 2 Wire Electric Cable w/Lugs-33 ft.	1	$ 130.00
38	4355	Replacement Monarch Plastic Tank (3qt.)**	1	$ 62.25
39	987	Replacement Fixed Control	1	$ 129.00
40	1111	License Plate Mount Kit	1	$ 4.15
41	949	Replacement Original Series License Plate Light	2	$ 6.25
42	958	Replacement 12 Volt Motor-Only (Monarch)**	1	$ 298.00
43	7545	3/4" Arm Pin w/Zerk (before serial # M-83394)	10	$ 6.25
	951	Replacement 3/4"x1-1/2" Arm Pin (after serial # M-83393)	10	$ 6.25
	7547	7/8" Arm Pin w/Zerk (before serial # M-82341-1000#&1300#) (before serial # M16-13066-1600#)	10	$ 6.25
	952	Replacement 7/8" Arm Pin (after serial # M-82340-1000#&1300#) (after serial # M16-13065-1600#)	10	$ 6.25
44	9645	Release Solenoid External Assembly w/Connector	1	$ 96.75
45	12749	Replacement Flow Control (7/16 M x 7/16 F x 0.078) w/ Adapters for (1/4 M x 1/4 F x 0.078)	1	$ 51.40
	12608	Replacement Flow Control (9/16 M x 7/16 Fx 0.078) w/ Adapters for (3/8 M x 3/8 F x 0.078)	1	$ 51.40
46	3818	Kickaway Spring w/Pin	2	$ 8.55
47	N/A	Replacement M319 Pump (only) w/3qt. Tank (2500psi)** 1346 thru 1350) (Discontinued - See Drawing Ref 18)	1	N/A
	N/A	Replacement M319 Pump (only) w/3qt. Tank (3000psi)** 1646 thru 1650) (Discontinued - See Drawing Ref 18)	1	N/A
	N/A	Replacement M319 Pump (only) w/3qt. Tank (3800psi)** 1046) (Discontinued - See Drawing Ref 18)	1	N/A
48	954	Replacement Latch Spring	1	$ 4.15
50	1087	LD Latch Kit	2	$ 15.75
50L	1070	Driver's Side Latch Kit (swing away)	1	$ 34.65
	1107	Driver's Side Latch Kit EA (swing away)	1	$ 36.60
51R	1071	Passenger's Side Latch Kit (fixed)	1	$ 20.50
52	955	Replacement Latch Knob w/Stud	2	$ 6.25
53	7516	Replacement Threaded Latch Bushing	2	$ 6.25
55	932	Replacement (91) Grip Tape Kit For Platform	1	$ 71.45
60	4713	EA Replacement Latch Rivet (1.5")	2	$ 10.90
	4716	EA Replacement Latch Rivet (2")	2	$ 10.90
61	4712	EA Replacement Platform Chain Pin (1.079")	2	$ 9.50
	4715	EA Replacement Platform Chain Pin (1.579")	2	$ 10.70
72	9521	Replacement Latch Pin & Lanyard Kit	2	$ 9.65
74	1083	Replacement Pin & Chain Only (LND)	2	$ 5.20
75	N/A	Dump Thru Knob & Pin Kit w/Spring-Driver Side (Discontinued - See Drawing Ref 84)	1	N/A
76	N/A	Replacement Dump Thru Handle Kit-Pass. Side (Discontinued - See Drawing Ref 84)	1	N/A
81	N/A	72LD Replacement Platform Frame Assembly (Discontinued - See Drawing Ref 84)	1	N/A
	N/A	80LD Replacement Platform Frame Assembly (Discontinued - See Drawing Ref 84)	1	N/A
	N/A	86LD Replacement Platform Frame Assembly (Discontinued - See Drawing Ref 84)	1	N/A
	N/A	91LD Replacement Platform Frame Assembly (Discontinued - See Drawing Ref 84)	1	N/A
82	N/A	72LD Replacement Treadplate Platform Insert (Discontinued - See Drawing Ref 84)	1	N/A
	N/A	80LD Replacement Treadplate Platform Insert (Discontinued - See Drawing Ref 84)	1	N/A
	N/A	86LD Replacement Treadplate Platform Insert (Discontinued - See Drawing Ref 84)	1	N/A
	N/A	91LD Replacement Treadplate Platform Insert (Discontinued - See Drawing Ref 84)	1	N/A
83	N/A	72LD Lower Replacement Latch Assembly (Discontinued - See Drawing Ref 84)	1	N/A
	N/A	80LD Lower Replacement Latch Assembly (Discontinued - See Drawing Ref 84)	1	N/A
	N/A	86LD Lower Replacement Latch Assembly (Discontinued - See Drawing Ref 84)	1	N/A
	N/A	91LD Lower Replacement Latch Assembly (Discontinued - See Drawing Ref 84)	1	N/A
84	2514	Retro 72 LND Replacement Platform & Sub Assembly Kit	1	$ 1,259.00
	2515	Retro 80 LND Replacement Platform & Sub Assembly Kit	1	$ 1,281.00
	2516	Retro 86 LND Replacement Platform & Sub Assembly Kit	1	$ 1,380.00
	2517	Retro 91 LND Replacement Platform & Sub Assembly Kit	1	$ 1,393.00
85	6329	72LD Replacement Sub Assembly (For Retro Kit # 2514 Only)	1	$ 300.00
	6330	80LD Replacement Sub Assembly (For Retro Kit # 2515 Only)	1	$ 325.00
	6331	86LD Replacement Sub Assembly (For Retro Kit # 2516 Only)	1	$ 337.00
	6332	91LD Replacement Sub Assembly (For Retro Kit # 2517 Only)	1	$ 350.00

NEW 1046, 1050, 1346, 1350, 1646 AND 1650 ORIGINAL SERIES PARTS DRAWING

(After Serial # M-340999 1000# & 1300#) (After Serial # M16-27999 1600#)
FOR MODELS 64SB, 72, 80, 86 & 91

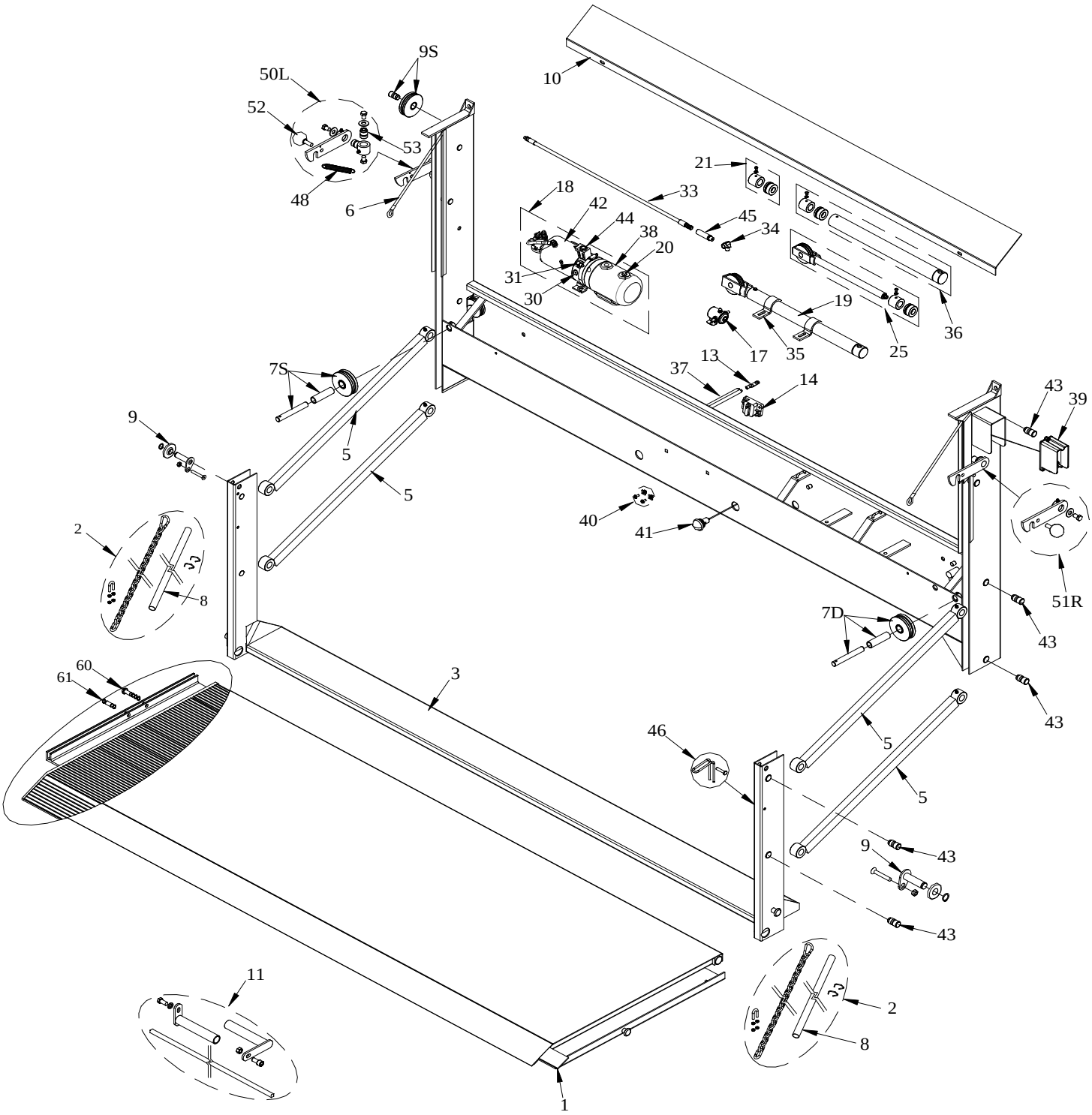

NEW 1050LD, 1350LD, AND 1650LD ORIGINAL SERIES PARTS DRAWING

(AFTER SERIAL # 00406118M)

FOR MODELS 72LD, 80LD, 86LD & 91LD

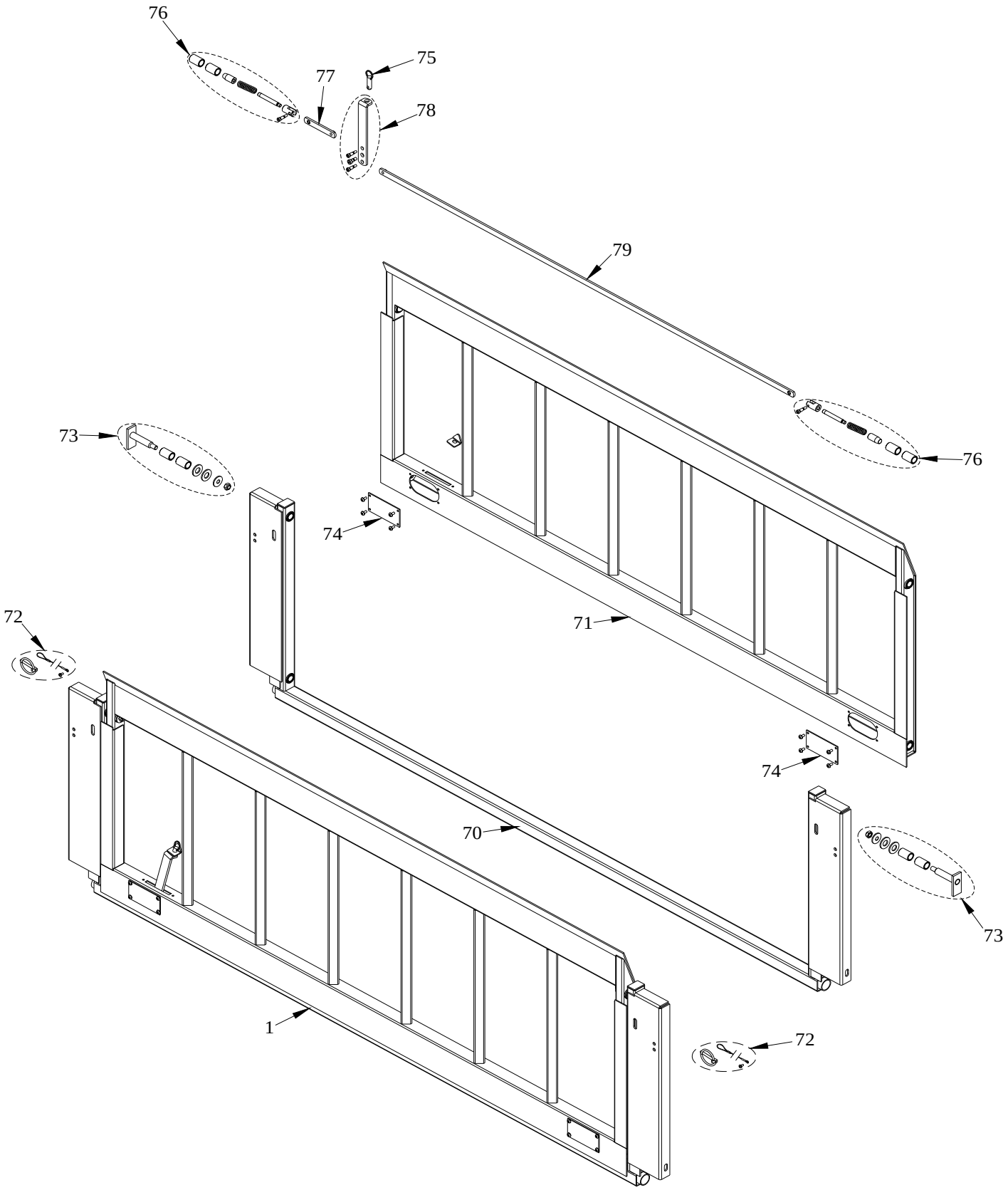

NEW 1046, 1050, 1346, 1350, 1646 AND 1650 ORIGINAL SERIES PARTS PRICE LIST

Draw. Ref.	Part No.	Description	Qty Required	Sugg. Retail (Each)
1	001782	(64SB) 36" Treadplate Replacement Platform	1	$ 615.00
	001783	(64SB) 42" Treadplate Replacement Platform	1	$ 944.00
	001638	(64SB) 37" Extruded Aluminum Replacement Platform	1	$ 1,156.00
	002508	(64SB) 42" Extruded Aluminum Replacement Platform	1	$ 1,508.00
	001784	(72) 36" Treadplate Replacement Platform	1	$ 675.00
	001785	(72) 42" Treadplate Replacement Platform	1	$ 1,004.00
	001639	(72) 37" Extruded Aluminum Replacement Platform	1	$ 1,327.00
	002646	(72) 42" Extruded Aluminum Replacement Platform	1	$ 1,676.00
	001786	(80) 36" Treadplate Replacement Platform	1	$ 731.00
	001787	(80) 42" Treadplate Replacement Platform	1	$ 1,060.00
	001640	(80) 37" Extruded Aluminum Replacement Platform	1	$ 1,478.00
	002509	(80) 42" Extruded Aluminum Replacement Platform	1	$ 1,827.00
	001788	(86) 36" Treadplate Replacement Platform	1	$ 753.00
	001789	(86) 42" Treadplate Replacement Platform	1	$ 1,082.00
	001641	(86) 37" Extruded Aluminum Replacement Platform	1	$ 1,533.00
	002513	(86) 42" Extruded Aluminum Replacement Platform	1	$ 1,883.00
	001790	(91) 36" Treadplate Replacement Platform	1	$ 766.00
	001791	(91) 42" Treadplate Replacement Platform	1	$ 1,095.00
	001642	(91) 37" Extruded Aluminum Replacement Platform	1	$ 1,581.00
	001224	(91) 42" Extruded Aluminum Replacement Platform	1	$ 1,931.00
	009488	72 LD Replacement Platform	1	$ 1,029.00
	009489	80 LD Replacement Platform	1	$ 1,053.00
	009553	86 LD Replacement Platform	1	$ 1,074.00
	009552	91 LD Replacement Platform	1	$ 1,091.00
	014043	(74) 37" Replacement Extruded Aluminum Platform	1	$ 1,368.00
2	003188	1046-1650 Replacement Platform Chain	2	$ 52.20
	003884	50" Travel EA Replacement Platform Chain	2	$ 54.45
	003849	42+6 Replacement Platform Chain	2	$ 65.30
3	004052	64SB Replacement Sub Assembly	1	$ 283.00
	004054	72 Replacement Sub Assembly	1	$ 300.00
	004056	80 Replacement Sub Assembly	1	$ 325.00
	004058	86 Replacement Sub Assembly	1	$ 337.00
	004060	91 Replacement Sub Assembly	1	$ 350.00
	013805	74 Replacement Sub Assembly	1	$ 308.00
5	001126	1046-1650 Replacement Lift Arm w/Pins & Zerks	4	$ 48.80
6	003124	Universal Set 5/16" Replacement Lift Cable Kit	1	$ 193.00
7D	004182	4" Dia. Double (5/16") Groove Replacement Pulley Kit with 7/8" Cross Box Pin	1	$ 62.50
7S	004186	4" Dia. Single (5/16") Groove Replacement Pulley Kit with 7/8" Cross Box Pin	1	$ 62.50
8	006516	Replacement Cloth Chain Cover 29"	2	$ 13.00
	006596	Replacement Cloth Chain Cover 38"	2	$ 13.00
9	010512	Drop Pin Assembly Kit (Set of 2) (36-50" Travel)	1	$ 26.90
9S	004184	4" Single (5/16") Groove Replacement Pulley Kit with 7/8" Upright Pin	2	$ 53.15
10	004964	Replacement Box Cover (64)	1	$ 39.35
	004965	Replacement Box Cover (72)	1	$ 43.20
	014584	Replacement Box Cover (74)	1	$ 45.55
	004966	Replacement Box Cover (80)	1	$ 48.45
	004967	Replacement Box Cover (86)	1	$ 51.95
	004968	Replacement Box Cover (91)	1	$ 55.10
11	010288	3/8" Torsion Spring Kit (64SB) (steel platform and EA with 2-7/8" lid ends)	1	$ 75.30
	008085	3/8" Torsion Spring Kit (64SB) (EA with 2-1/2" lid ends)	1	$ 75.30
	008028	3/8" Torsion Spring Kit (72) (steel platform and EA with 2-7/8" lid ends)	1	$ 75.30
	008116	3/8" Torsion Spring Kit (72) (EA with 2-1/2" lid ends)	1	$ 75.30
	008117	SQ Torsion Spring Kit (80) (steel platform and EA with 2-7/8" lid ends)	1	$ 112.00
	008029	3/8" Torsion Spring Kit (80) (EA with 2-1/2" lid ends)	1	$ 75.30
	008118	SQ Torsion Spring Kit (86) (steel platform and EA with 2-7/8" lid ends)	1	$ 112.00
	008032	3/8" Torsion Spring Kit (86) (EA with 2-1/2" lid ends)	1	$ 75.30
	008119	SQ Torsion Spring Kit (91) (steel platform and EA with 2-7/8" lid ends)	1	$ 112.00
	008033	3/8" Torsion Spring Kit (91) (EA with 2-1/2" lid ends)	1	$ 75.30
13	000992	Replacement Copper Lug	6	$ 4.15
14	000998	Replacement 150 Amp Manual Reset Circuit Breaker	1	$ 61.10
17	000967	Replacement Raise Solenoid-3 Post	1	$ 58.45
18	004295	M319 Replacement Pump & Motor (2000psi) 3qt.** 1046-1050	1	$ 522.00
	004365	M319 Replacement Pump & Motor (2500psi) 3qt.** 1350	1	$ 522.00
	004366	M319 Replacement Pump & Motor (3000psi) 3qt.** 1650	1	$ 522.00
19	003432	64SB-1646 Replacement Cylinder	1	$ 346.00
	009754	50" Travel Replacement Cylinder	1	$ 346.00
20	000989	Replacement Vent Plug	1	$ 4.15
21	001141	2" Cylinder Repair Kit (50" Travel) Includes: Piston, Guide Bushing & O-rings	1	$ 68.65

NEW 1046, 1050, 1346, 1350, 1646 AND 1650 ORIGINAL SERIES PARTS PRICE LIST

Draw. Ref.	Part No.	Description	Qty Required	Sugg. Retail (Each)
25	003228	Cylinder Shaft w/Pulley Assembly (64SB) Includes: Cylinder Repair Kit	1	$ 223.00
	003226	Cylinder Shaft w/Pulley Assembly (50" Travel) Includes: Cylinder Repair Kit	1	$ 239.00
30	000973	Replacement Monarch Lee Check Valve	1	$ 29.95
31	000944	Replacement 90 Degree Elbow (Male 9/16 O-ring Boss x Female 1/4 NPTF)	1	$ 15.40
	012611	Replacement 90 Degree Elbow (Male 9/16 O-ring Boss x Male 7/16 JIC)	1	$ 10.55
33	012959	Replacement 1/4"x44" Hydraulic Hose w/ Adapters (64-1346-1646SB)	1	$ 47.20
	012960	Replacement 1/4"x48" Hydraulic Hose w/ Adapters (72-1050-1650)	1	$ 47.20
	012961	Replacement 1/4"x56" Hydraulic Hose w/ Adapters (80-1050-1650)	1	$ 47.20
	012962	Replacement 1/4"x62" Hydraulic Hose w/ Adapters (86-1050-1650)	1	$ 49.30
	012963	Replacement 1/4"x68" Hydraulic Hose w/ Adapters (91-1050-1650)	1	$ 49.30
34	000934	Replacement 3/8"x3/8"x90 degree Cylinder Elbow	1	$ 6.25
	000917	Replacement 3/8"x9/16"x90 degree Cylinder Elbow	1	$ 10.55
	012607	Replacement 90 Degree Elbow (Male 9/16 ORB x Female 9/16 ORB)	1	$ 10.55
	013073	Replacement 90 Degree Elbow (Male 7/16 ORB x Female 7/16 ORB)	1	$ 10.55
35	006833	1-3/4" & 2" Replacement Cylinder Clamp (1340-1650)	1	$ 8.20
36	003256	Replacement Cylinder Barrel Assembly (64SB) Includes: Cylinder Repair Kit	1	$ 270.00
	003254	Replacement Cylinder Barrel Assembly (50" Travel) Includes: Cylinder Repair Kit	1	$ 270.00
37	004708	Replacement 4Ga. 2 Wire Electric Cable w/Lugs-33 ft.	1	$ 130.00
38	004355	Replacement Monarch Plastic Tank (3qt.)**	1	$ 62.25
39	000987	Replacement Fixed Control	1	$ 129.00
40	001111	License Plate Mount Kit	1	$ 4.15
41	000949	Replacement Original Series License Plate Light	2	$ 6.25
42	000958	Replacement 12 Volt Motor-Only (Monarch)**	1	$ 298.00
43	000952	Replacement 7/8" Arm Pin	10	$ 6.25
44	009645	Release Solenoid External Assembly w/Connector	1	$ 96.75
45	012749	Replacement Flow Control (7/16 M x 7/16 F x 0.078) w/ Adapters for (1/4 M x 1/4 F x 0.078)	1	$ 51.40
	012608	Replacement Flow Control (9/16 M x 7/16 Fx 0.078) w/ Adapters for (3/8 M x 3/8 F x 0.078)	1	$ 51.40
46	003818	Kickaway Spring w/Pin	2	$ 8.55
47	N/A	Replacement M319 Pump (only) w/3qt. Tank (2000psi)** 1050) (Discontinued - See Drawing Ref 18)	1	N/A
	N/A	Replacement M319 Pump (only) w/3qt. Tank (2500psi) 1350) (Discontinued - See Drawing Ref 18)	1	N/A
	N/A	Replacement M319 Pump (only) w/3qt. Tank (3000psi) 1650) (Discontinued - See Drawing Ref 18)	1	N/A
48	000954	Replacement Latch Spring	1	$ 4.15
50L	001107	Driver's Side Latch Kit (swing away)	1	$ 36.60
	014538	EA Driver's Side Latch Kit (swing away)(74)	1	$ 36.60
51R	001071	Passenger's Side Latch Kit (fixed)	1	$ 20.50
	014539	EA Passenger's Side Latch Kit (74)	1	$ 20.50
52	000955	Replacement Latch Knob w/Stud	2	$ 6.25
53	007516	Replacement Threaded Latch Bushing	2	$ 6.25
56	000966	Replacement Padlock w/Keys	1	$ 9.65
60	004713	EA Replacement Latch Rivet (1.5")	2	$ 10.90
61	004712	EA Replacement Platform Chain Pin (1.079)	2	$ 9.50
70	009498	Replacement Outer Platform Assembly (72LD)	1	$ 274.00
	009497	Replacement Outer Platform Assembly (80LD)	1	$ 279.00
	009496	Replacement Outer Platform Assembly (86LD)	1	$ 281.00
	009495	Replacement Outer Platform Assembly (91LD)	1	$ 286.00
71	009534	Replacement Platform Insert (72LD)	1	$ 700.00
	009541	Replacement Platform Insert (80LD)	1	$ 750.00
	009542	Replacement Platform Insert (86LD)	1	$ 781.00
	009543	Replacement Platform Insert (91LD)	1	$ 812.00
72	009521	Replacement Latch Pin & Lanyard	2	$ 9.65
73	009492	Replacement LD Insert Pivot Pin Assembly	2	$ 31.35
74	009494	Replacement LD Access Cover	2	$ 7.55
75	000913	Replacement 1/2"Dia.x1" Cotterless Hitch Pin	1	$ 7.15
76	009491	Replacement LD Insert Latch Pin Assembly	2	$ 43.75
77	009504	Replacement Short Insert Link Assembly (LND)	1	$ 20.95
78	009493	Replacement LD Insert Handle Assembly	1	$ 20.50
79	009514	Replacement Long Insert Link Assembly (72LND)	1	$ 63.90
	009517	Replacement Long Insert Link Assembly (80LND)	1	$ 63.90
	009518	Replacement Long Insert Link Assembly (86LND)	1	$ 63.90
	009519	Replacement Long Insert Link Assembly (91LND)	1	$ 63.90

**Please provide the liftgate Model and Serial numbers when ordering repair parts.
Note: The above prices are for standard equipment only. Call the factory for pricing of optional equipment or special features.

OLD 1600 AND 2000 RAILGATE SERIES
PARTS DRAWING
FOR MODELS 73, 79, 85, 89 & 95

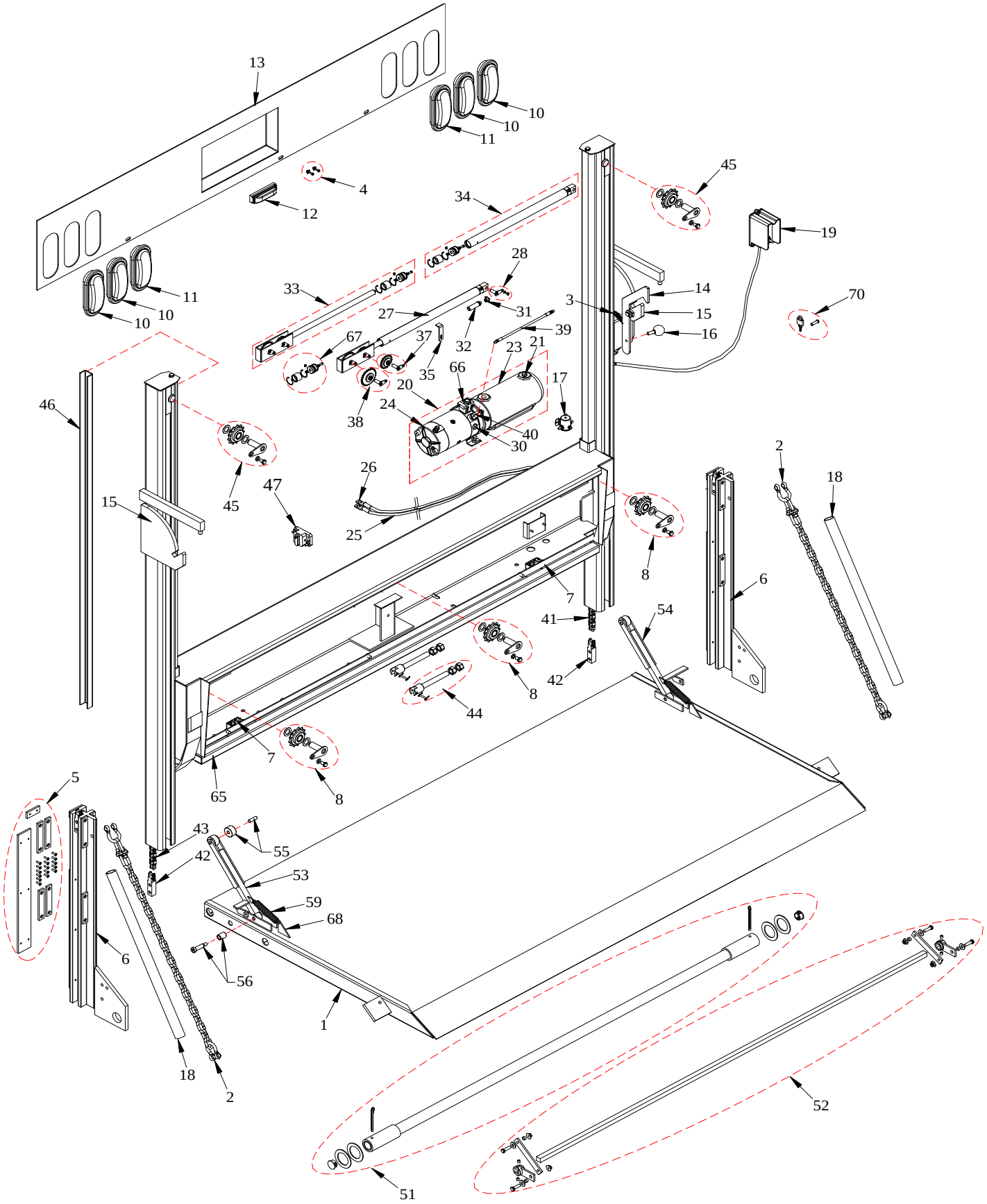

OLD 1600 AND 2000 RAILGATE SERIES
BOTTLE RACK PARTS DRAWING
FOR MODELS 73, 79, 85, 89 & 95

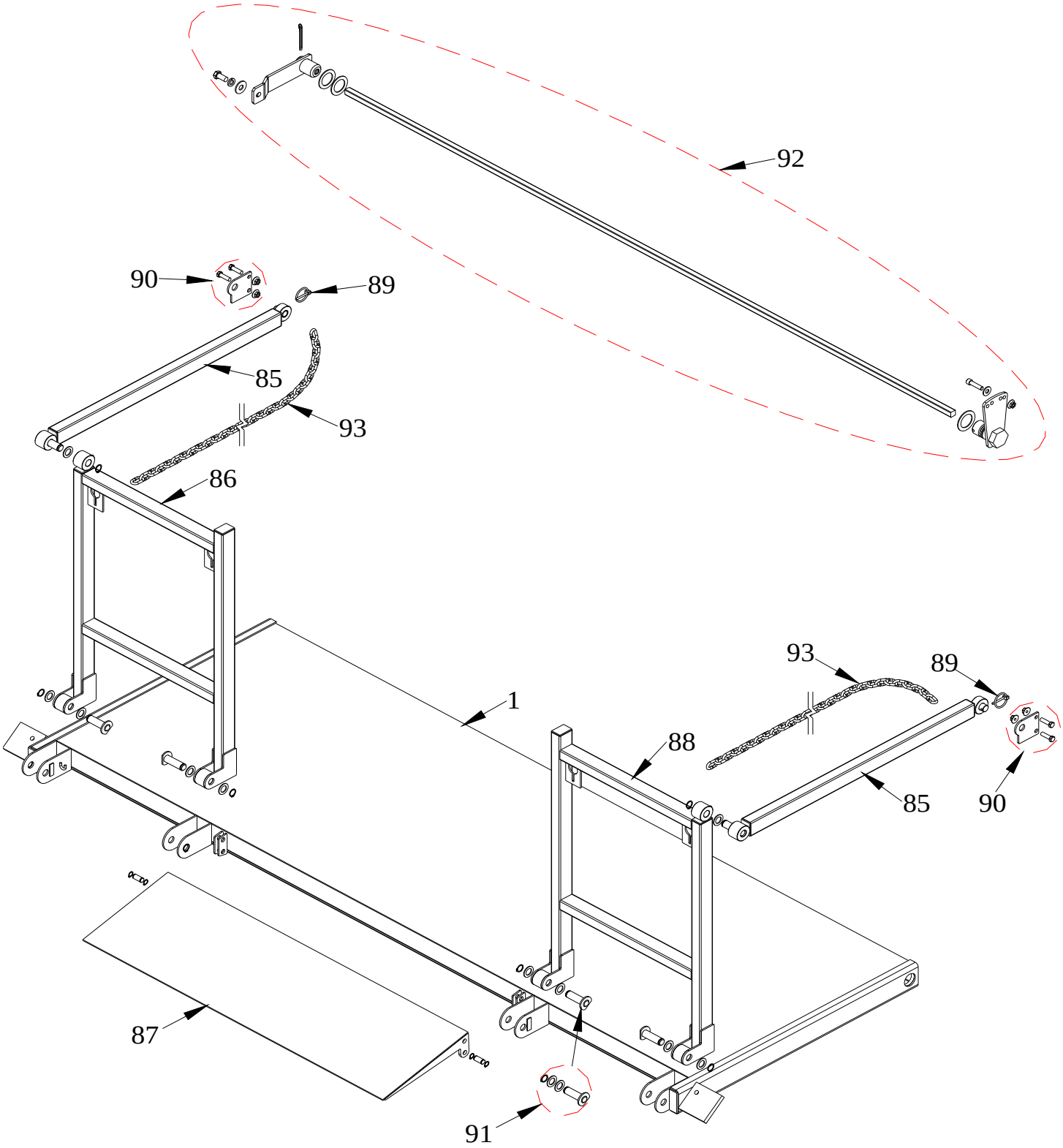

OLD 1600 AND 2000 RAILGATE SERIES
ALUMINUM CARTSTOP PARTS DRAWING
FOR MODELS 73, 79, 85, 89 & 95

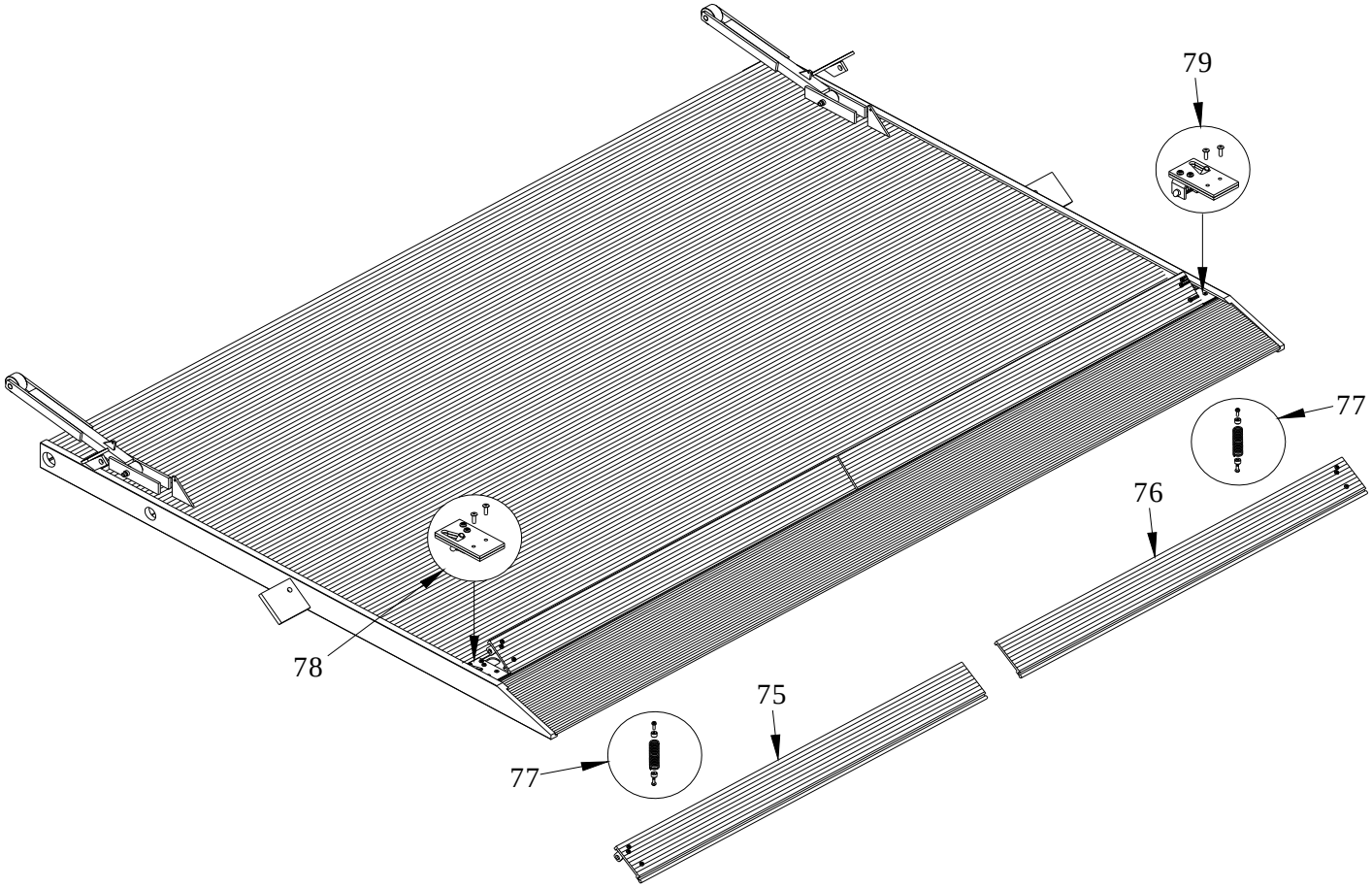

OLD 1600 AND 2000 RAILGATE SERIES PARTS PRICE LIST

Draw. Ref.	Part No.	Description	Qty Required	Sugg. Retail (Each)
1	001718	(73) SC 37+6 Replacement Steel Platform	1	$ 815.00
	001719	(79) SC 37+6 Replacement Steel Platform	1	$ 823.00
	001261	(85) SC 37+6 Replacement Steel Platform	1	$ 834.00
	001262	(89) SC 37+6 Replacement Steel Platform	1	$ 848.00
	001700	(95) SC 37+6 Replacement Steel Platform	1	$ 861.00
	001727	(73) SC 60+12 Replacement Aluminum Platform	1	$ 2,929.00
	001728	(79) SC 60+12 Replacement Aluminum Platform	1	$ 2,997.00
	001267	(85) SC 60+12 Replacement Aluminum Platform	1	$ 3,072.00
	001268	(89) SC 60+12 Replacement Aluminum Platform	1	$ 3,109.00
	001703	(95) SC 60+12 Replacement Aluminum Platform	1	$ 3,221.00
	001723	(73) SC 42+6 Replacement Steel Platform	1	$ 1,030.00
	001724	(79) SC 42+6 Replacement Steel Platform	1	$ 1,040.00
	001263	(85) SC 42+6 Replacement Steel Platform	1	$ 1,051.00
	001264	(89) SC 42+6 Replacement Steel Platform	1	$ 1,064.00
	001701	(95) SC 42+6 Replacement Steel Platform	1	$ 1,077.00
	001740	(73) TA 30+12 Replacement SGBR w/Rack	1	$ 1,289.00
	001741	(79) TA 30+12 Replacement SGBR w/Rack	1	$ 1,299.00
	001286	(85) TA 30+12 Replacement SGBR w/Rack	1	$ 1,308.00
	001287	(89) TA 30+12 Replacement SGBR w/Rack	1	$ 1,327.00
	001742	(95) TA 30+12 Replacement SGBR w/Rack	1	$ 1,348.00
	006374	(73) SC 55+12 Replacement Aluminum Platform	1	$ 2,775.00
	006494	(79) SC 55+12 Replacement Aluminum Platform	1	$ 2,843.00
	001720	(85) SC 55+12 Replacement Aluminum Platform	1	$ 2,918.00
	003323	(89) SC 55+12 Replacement Aluminum Platform	1	$ 2,954.00
	003172	(95) SC 55+12 Replacement Aluminum Platform	1	$ 3,067.00
2	003894	Rail (BH) Replacement Platform Chain	2	$ 75.45
	003895	Rail (AB) Replacement Platform Chain	2	$ 66.85
	010895	Rail (AB) 65+6 Replacement Platform Chain	2	$ 75.45
	003896	Rail (BH) 65+6 Replacement Platform Chain	2	$ 80.00
3	000931	Replacement Rail Latch Spring	1	$ 6.25
4	001111	License Plate Mount Kit	1	$ 4.15
5	008618	Replacement Bearing Pad Set (Steel Mainframe)	2	$ 37.30
	008591	Replacement Bearing Pad Set (Aluminum Mainframe)	2	$ 37.30
6	008628	44" Replacement Slider w/Pads-Left Self-Close (Steel Mainframe-BH)	1	$ 211.00
	008629	44" Replacement Slider w/Pads-Right Self-Close (Steel Mainframe-BH)	1	$ 211.00
	011864	36" Replacement Slider w/Pads-Self-Close (Steel Mainframe-AB) after 4/19/11*	2	$ 182.00
	008654	44" Replacement Slider w/Pads-Left Self-Close (Alum. Mainframe-BH)	1	$ 211.00
	008655	44" Replacement Slider w/Pads-Right Self-Close (Alum. Mainframe-BH)	1	$ 211.00
	011865	36" Replacement Slider w/Pads-Self-Close (Alum. Mainframe-AB)*	2	$ 182.00
7	000930	Replacement Rail Safety Switch	2	$ 41.95
8	004149	13 Tooth Replacement Sprocket, Pin & Keeper	AB=3, BH=4	$ 51.05
	004191	13 Tooth Replacement Sprocket, Pin & Keeper (All Aluminum)	AB=3, BH=4	$ 61.10
10	000928	Replacement Red Light w/Grommet (after serial # M16-2387R and M20-5786)	4	$ 24.50
	000929	Replacement Red Light w/Grommet (before serial # M16-23388R and M20-5787)	4	$ 24.50
11	000926	Replacement Clear Light w/Grommet (after serial # M16-2387R and M20-5786)	2	$ 24.50
	000927	Replacement Clear Light w/Grommet (before serial # M16-23388R and M20-5787)	1	$ 24.50
12	004036	Replacement License Plate Light & Bracket (154c) (after serial # M16-23387R and M20-5786)	1	$ 23.15
	000949	Replacement License Plate Light (before serial # M16-23388R and M20-5787)	1	$ 6.25

OLD 1600 AND 2000 RAILGATE SERIES PARTS PRICE LIST

Draw. Ref.	Part No.	Description	Qty Required	Sugg. Retail (Each)
13	004710	Replacement Steel Box Cover w/Lights (73SC)	1	$ 232.00
	004760	Replacement Steel Box Cover w/Lights (79SC)	1	$ 241.00
	004762	Replacement Steel Box Cover w/Lights (85SC)	1	$ 263.00
	004764	Replacement Steel Box Cover w/Lights (89SC)	1	$ 300.00
	004772	Replacement Steel Box Cover w/Lights (95SC)	1	$ 326.00
14	001977	Railgate Replacement Latch Lever	1	$ 46.00
	002005	Aluminum Railgate Replacement Latch Lever	1	$ 46.95
15	002033	Replacement Steel Latch Plate-Right	1	$ 134.00
	000925	Replacement Steel Latch Plate-Left	1	$ 71.20
	002006	All Aluminum Railgate Replacement Latch Plate-Right	1	$ 151.00
	002007	All Aluminum Railgate Replacement Latch Plate-Left	1	$ 88.15
16	000955	Replacement Latch Knob w/Stud	1	$ 6.25
17	000967	Replacement Raise Solenoid-3 Post	1	$ 58.45
18	006597	Replacement Cloth Chain Cover 46"	2	$ 13.00
	006596	Replacement Cloth Chain Cover 38"	2	$ 13.00
	006593	Replacement Cloth Chain Cover 53"	2	$ 13.00
19	000987	Replacement Fixed Control	1	$ 129.00
20	004485	M319 Replacement Pump & Motor (2600psi) 2qt.** 1600# Railgate (73) (N)	1	$ 522.00
	004290	M319 Replacement Pump & Motor (2600psi) 3qt.** 1600# Railgate (N)	1	$ 522.00
	004486	M319 Replacement Pump & Motor (3200psi) 2qt.** 2000# Railgate (73) (N)	1	$ 522.00
	004291	M319 Replacement Pump & Motor (3200psi) 3qt.** 2000# Railgate (N)	1	$ 522.00
21	000989	Replacement Vent Plug	1	$ 4.15
22	N/A	Replacement M319 Pump (only) w/2qt. Tank (2600psi) 1600# Railgate (73) (N) (Discontinued - See Drawing Ref 20)	1	N/A
	N/A	Replacement M319 Pump (only) w/3qt. Tank (2600psi) 1600# Railgate (N) (Discontinued - See Drawing Ref 20)	1	N/A
	N/A	Replacement M319 Pump (only) w/2qt. Tank (3200psi) 2000# Railgate (73) (N) (Discontinued - See Drawing Ref 20)	1	N/A
	N/A	Replacement M319 Pump (only) w/3qt. Tank (3200psi) 2000# Railgate (N) (Discontinued - See Drawing Ref 20)	1	N/A
23	004355	Replacement Monarch Plastic Tank (3qt.)**	1	$ 62.25
	004354	Replacement Monarch Plastic Tank (2qt.)** 73 Railgate	1	$ 62.25
24	000958	Replacement 12 Volt Motor-Only (Monarch)**	1	$ 298.00
25	004708	Replacement 4 Ga. 2 Wire Electric Cable w/Lugs-33 ft.	1	$ 130.00
26	000992	Replacement Copper Lug	6	$ 4.15
27	009760	Railgate Replacement Cylinder (79-95)	1	$ 419.00
	009757	Railgate Replacement Cylinder (73)	1	$ 419.00
28	008222	Replacement Rail Cylinder Pin & Keeper	1	$ 30.50
30	000973	Replacement Monarch Lee Check Valve (after serial # M16-26696R 1600#) (after serial # M20-6881 2000#)	1	$ 29.95
31	000934	Replacement 3/8"x3/8"x90 Degree Steel Cylinder Elbow	1	$ 6.25
	000917	Replacement 3/8"x9/16"x90 Degree Steel Cylinder Elbow	1	$ 10.55
	012607	Replacement 90 Degree Elbow (Male 9/16 ORB x Female 9/16 ORB)		$ 10.55
32	012966	Replacement Flow Control Complete (9/16" M x 7/16" F x 0.078") w/ Adapters for (3/8" M x 1/4" F x 0.078")	1	$ 51.40
33	003221	Cylinder Shaft w/Sprockets Assembly (Rail) Includes: Cylinder Repair Kit	1	$ 384.00
	003287	Cylinder Shaft w/Sprockets Assembly (73 Rail) Includes: Cylinder Repair Kit	1	$ 384.00
34	003257	2"x35" Replacement Cylinder Barrel (Rail) Includes: Cylinder Repair Kit	1	$ 300.00
	003290	2"x29" Replacement Cylinder Barrel (73 Rail) Includes: Cylinder Repair Kit	1	$ 300.00
35	006834	Replacement Cylinder Clamp (Rail)	1	$ 8.20
	006835	Replacement Cylinder Clamp (All Aluminum Rail)	1	$ 9.40
37	004188	19-Tooth Repair Sprocket with 3/4"x2" Pin & Keeper	1	$ 53.15
38	004189	25-Tooth Repair Sprocket with 3/4"x2" Pin & Keeper	1	$ 77.70
39	012609	Replacement 1/4"x20" Hydraulic Hose w/ Adapters (79,85,89,95)	1	$ 47.20
	012610	Replacement 1/4"x15" Hydraulic Hose w/ Adapters (73)	1	$ 47.20
40	000944	Replacement 90 Degree Elbow (Male 9/16 O-ring Boss x Female 1/4 NPTF)	1	$ 15.40
	000945	Replacement 90 Degree Elbow (Male 3/8 NTPF x Female 1/4 NPTF)	1	$ 6.25
	012611	Replacement 90 Degree Elbow (Male 9/16 O-ring Boss x Male 7/16 JIC)	1	$ 10.55
41	008020	173 Pitch Replacement Roller Chain Bed-Height Passenger's Side	1	$ 154.00
	008021	281 Pitch Replacement Roller Chain Above-Bed Passenger's Side	1	$ 237.00
42	008030	Replacement Roller Chain Attachment Fitting	2	$ 26.05
43	008022	219 Pitch Replacement Roller Chain Bed-Height Driver's Side	1	$ 186.00
	008023	325 Pitch Replacement Roller Chain Above-Bed Driver's Side	1	$ 266.00
	008035	229 Pitch Replacement Roller Chain Bed-Height Driver's Side (95)	1	$ 193.00
	008044	335 Pitch Replacement Roller Chain Above-Bed Driver's Side (95)	1	$ 269.00
44	007947	Roller Chain Adjustment Screw, Clevis & Pin	2	$ 31.90
45	004190	13 Tooth Replacement Sprocket (Above-Bed only) with 3/4"x3" Pin & Keeper	2	$ 46.95
	004192	13 Tooth All Aluminum Replacement Sprocket, Pin & Keeper (Above-Bed only)	2	$ 50.10
46	007866	Replacement Roller Chain Cover (Above-Bed only)	2	$ 20.50
	007884	Replacement All Aluminum Rail Roller Chain Cover (Above-Bed only)	2	$ 27.25
47	000998	Replacement 150 Amp Manual Reset Circuit Breaker	1	$ 61.10

OLD 1600 AND 2000 RAILGATE SERIES PARTS PRICE LIST

Draw. Ref.	Part No.	Description	Qty Required	Sugg. Retail (Each)
51	006437	76-1/2" Replacement Hinge Tube (73)	1	$ 88.55
	006435	82-1/2"" Replacement Hinge Tube (79)	1	$ 88.55
	006433	88" Replacement Hinge Tube (85)	1	$ 88.55
	006434	92" Replacement Hinge Tube (89)	1	$ 88.55
	006436	98" Replacement Hinge Tube (95)	1	$ 88.55
52	008058	Railgate Replacement Self-Close Linkage Only (Excludes Rod)	1	$ 49.85
	008092	Railgate Replacement Self-Close Rod & Linkage (73)	1	$ 83.70
	008061	Railgate Replacement Self-Close Rod & Linkage (79)	1	$ 83.70
	008060	Railgate Replacement Self-Close Rod & Linkage (85)	1	$ 83.70
	008059	Railgate Replacement Self-Close Rod & Linkage (89)	1	$ 83.70
	007995	Railgate Replacement Self-Close Rod & Linkage (95)	1	$ 83.70
	008093	Aluminum Railgate Replacement Self-Close Rod & Linkage (73)	1	$ 91.70
	008094	Aluminum Railgate Replacement Self-Close Rod & Linkage (79)	1	$ 91.70
	008071	Aluminum Railgate Replacement Self-Close Rod & Linkage (85)	1	$ 91.70
	008072	Aluminum Railgate Replacement Self-Close Rod & Linkage (89)	1	$ 91.70
	008095	Aluminum Railgate Replacement Self-Close Rod & Linkage (95)	1	$ 91.70
53	008137	Replacement Steel Platform Self-Close Arm Kit- Left	1	$ 53.15
	008140	Replacement Aluminum Platform Self-Close Arm Kit- Left	1	$ 63.00
	008128	Replacement All Aluminum Self-Close Arm Kit (Left)	1	$ 91.90
54	008136	Replacement Steel Platform Self-Close Arm Kit- Right	1	$ 53.15
	008139	Replacement Aluminum Platform Self-Close Arm Kit- Right	1	$ 63.00
	007290	Replacement All Aluminum Self-Close Arm Kit (Right)	1	$ 91.90
55	008066	1-3/4" Replacement Self-Close Roller Kit	2	$ 14.35
56	008067	Repair Self-Close Arm Bushing Kit-Steel Platform	2	$ 12.90
	008068	Repair Self-Close Arm Bushing Kit-Aluminum Platform	2	$ 19.55
59	000922	Replacement 0.142"x1.125"x5.5" Extension Spring (Rail)	2	$ 9.10
65	008002	Replacement Self-Close Safety Trip Bar-65-1/2" (73)	1	$ 48.60
	008064	Replacement Self-Close Safety Trip Bar-71-1/2" (79)	1	$ 48.60
	008062	Replacement Self-Close Safety Trip Bar-77-1/2" (85)	1	$ 48.60
	008063	Replacement Self-Close Safety Trip Bar-81-1/2" (89)	1	$ 48.60
	008065	Replacement Self-Close Safety Trip Bar-87-1/2" (95)	1	$ 48.60
	007992	(A73SC) Replacement Safety Trip Bar-65-1/2"	1	$ 81.60
	007993	(A79SC) Replacement Safety Trip Bar-71-1/2"	1	$ 81.60
	007979	(A85SC) Replacement Safety Trip Bar-77-1/2"	1	$ 81.60
	007980	(A89SC) Replacement Safety Trip Bar-81-1/2"	1	$ 81.60
	007994	(A95SC) Replacement Safety Trip Bar-87-1/2"	1	$ 81.60
66	009645	Release Solenoid External Assembly w/Connector	1	$ 96.75
67	001110	2" Cylinder Repair Kit (after serial # M16-16166R and M20-3192)	1	$ 158.00
68	000920	Replacement Steel Platform Triangle Deadman	2	$ 4.15
	000921	Replacement Aluminum Platform Triangle Deadman	2	$ 6.25
70	000914	Rail Pin & Padlock w/Keys	1	$ 15.95
75	008363	Replacement Left Cartstop Assembly (73) w/Spring (not in taper)	1	$ 125.00
	008390	Replacement Left Cartstop Assembly (79) w/Spring (not in taper)	1	$ 127.00
	008391	Replacement Left Cartstop Assembly (85) w/Spring (not in taper)	1	$ 129.00
	008392	Replacement Left Cartstop Assembly (89) w/Spring (not in taper)	1	$ 131.00
	008365	Replacement Left Cartstop Assembly (95) w/Spring (not in taper)	1	$ 133.00
76	008364	Replacement Right Cartstop Assembly (73) w/Spring (not in taper)	1	$ 125.00
	008393	Replacement Right Cartstop Assembly (79) w/Spring (not in taper)	1	$ 127.00
	008394	Replacement Right Cartstop Assembly (85) w/Spring (not in taper)	1	$ 129.00
	008395	Replacement Right Cartstop Assembly (89) w/Spring (not in taper)	1	$ 131.00
	008366	Replacement Right Cartstop Assembly (95) w/Spring (not in taper)	1	$ 133.00
77	008396	Replacement Cartstop Spring Assembly (not in taper)	2	$ 19.80
78	008397	Replacement Cartstop Latch Assembly (L) (not in taper)	1	$ 74.95
79	008398	Replacement Cartstop Latch Assembly (R) (not in taper)	1	$ 74.95
85	002324	Replacement Horizontal Tube Assembly (BR)	2	$ 123.00
86	002325	Replacement Bottle Rack Fence-Left	1	$ 195.00
87	002333	Replacement Bottle Rack Taper (73)	1	$ 84.75
	002326	Replacement Bottle Rack Taper (79)	1	$ 91.50
	002327	Replacement Bottle Rack Taper (85)	1	$ 105.00
	002328	Replacement Bottle Rack Taper (89)	1	$ 113.00
	002332	Replacement Bottle Rack Taper (95)	1	$ 124.00
88	002329	Replacement Bottle Rack Fence-Right	1	$ 195.00
89	000919	Replacement Gas Bottle Rack Lynch Pin	2	$ 4.55
90	002330	Replacement Pivot Plate (BR)	2	$ 31.35
91	002331	Replacement Pivot Pin w/Snap Ring (BR)	4	$ 15.95
92	002054	5/8"SQ. Torsion Spring Kit (73Rail)	1	$ 273.00
	001993	5/8"SQ. Torsion Spring Kit (79Rail)	1	$ 273.00
	001996	5/8"SQ. Torsion Spring Kit (85Rail)	1	$ 273.00
	001999	5/8"SQ. Torsion Spring Kit (89Rail)	1	$ 273.00
	002034	5/8"SQ. Torsion Spring Kit (95Rail)	1	$ 273.00
93	000918	Replacement Bottle Rack Chain - 3/16" Zinc x 75 Link	2	$ 30.60

**Please provide the liftgate Model and Serial numbers when ordering repair parts.
Note: The above prices are for standard equipment only. Call the factory for pricing of optional equipment or special features.

*Please verify slider length before ordering repair parts. If you have 32" sliders, they can be replaced with 36" sliders in pairs, but you will lose some travel. Call Tommy Gate for more details.

NEW 1600 AND 2000 RAILGATE SERIES
PARTS DRAWING
FOR MODELS 73, 79, 85, 89 & 95

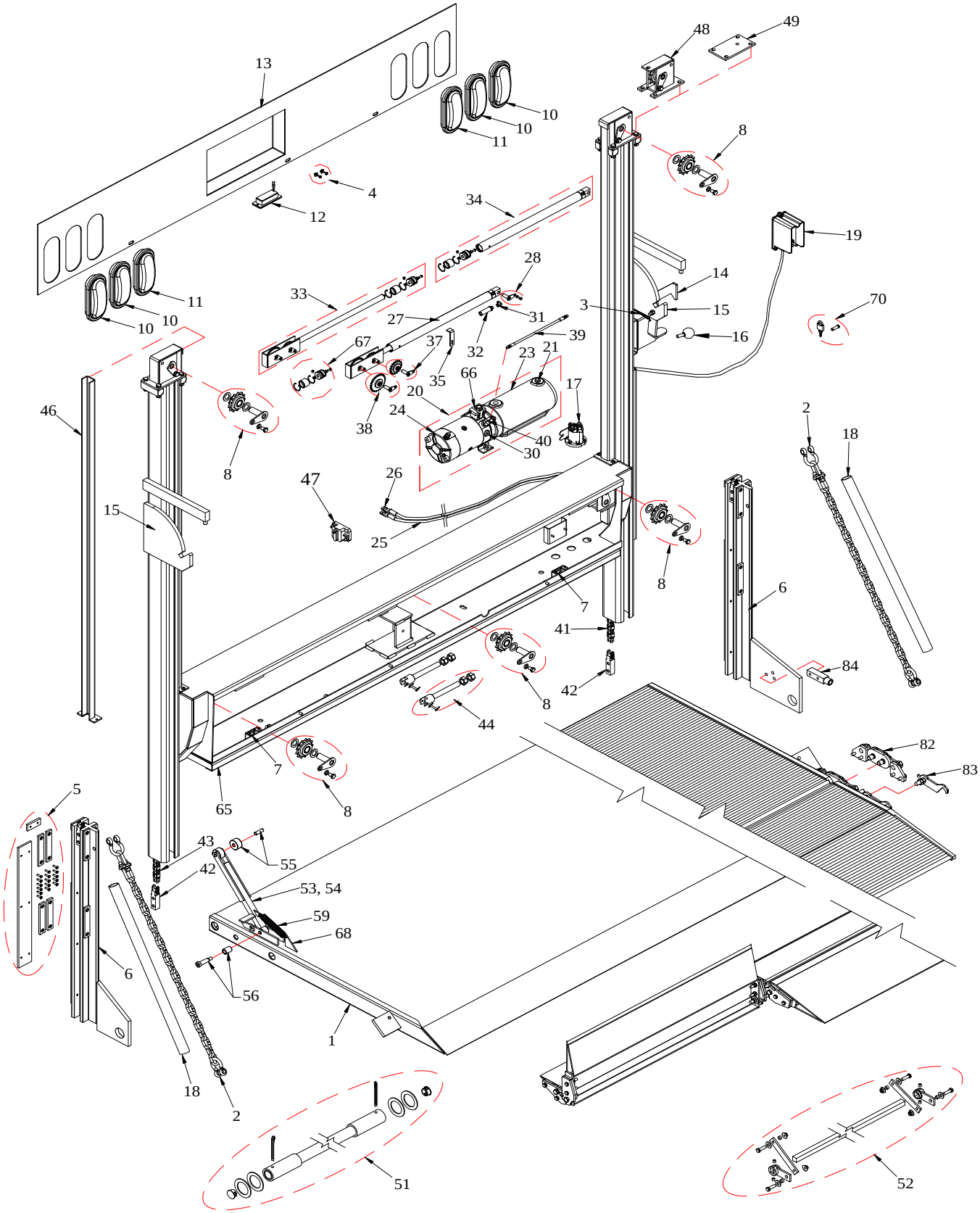

NEW 1600 AND 2000 RAILGATE SERIES
BOTTLE RACK PARTS DRAWING
FOR MODELS 73, 79, 85, 89 & 95

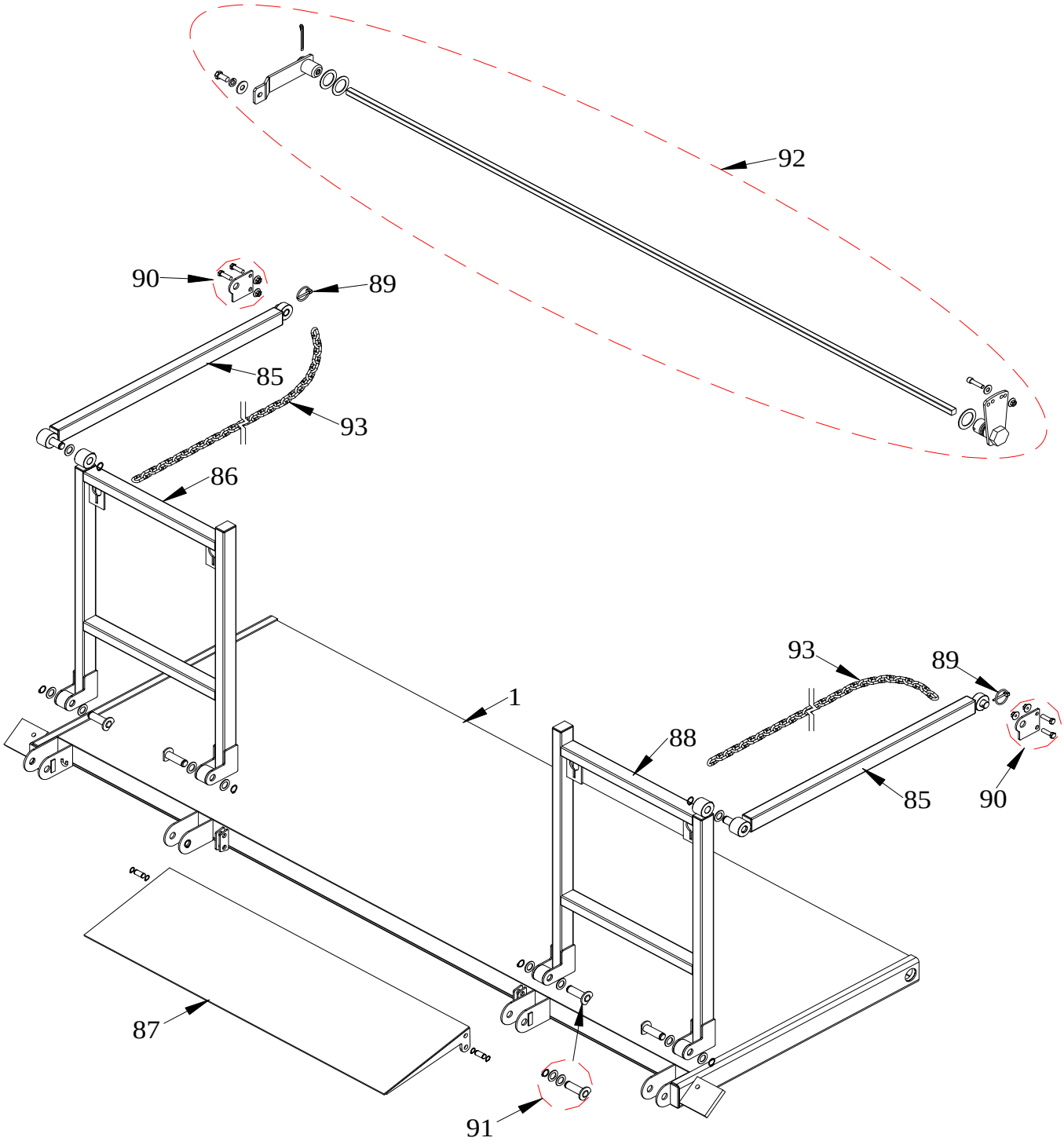

NEW 1600 AND 2000 RAILGATE SERIES
ALUMINUM CARTSTOP PARTS DRAWING
FOR MODELS 73, 79, 85, 89 & 95

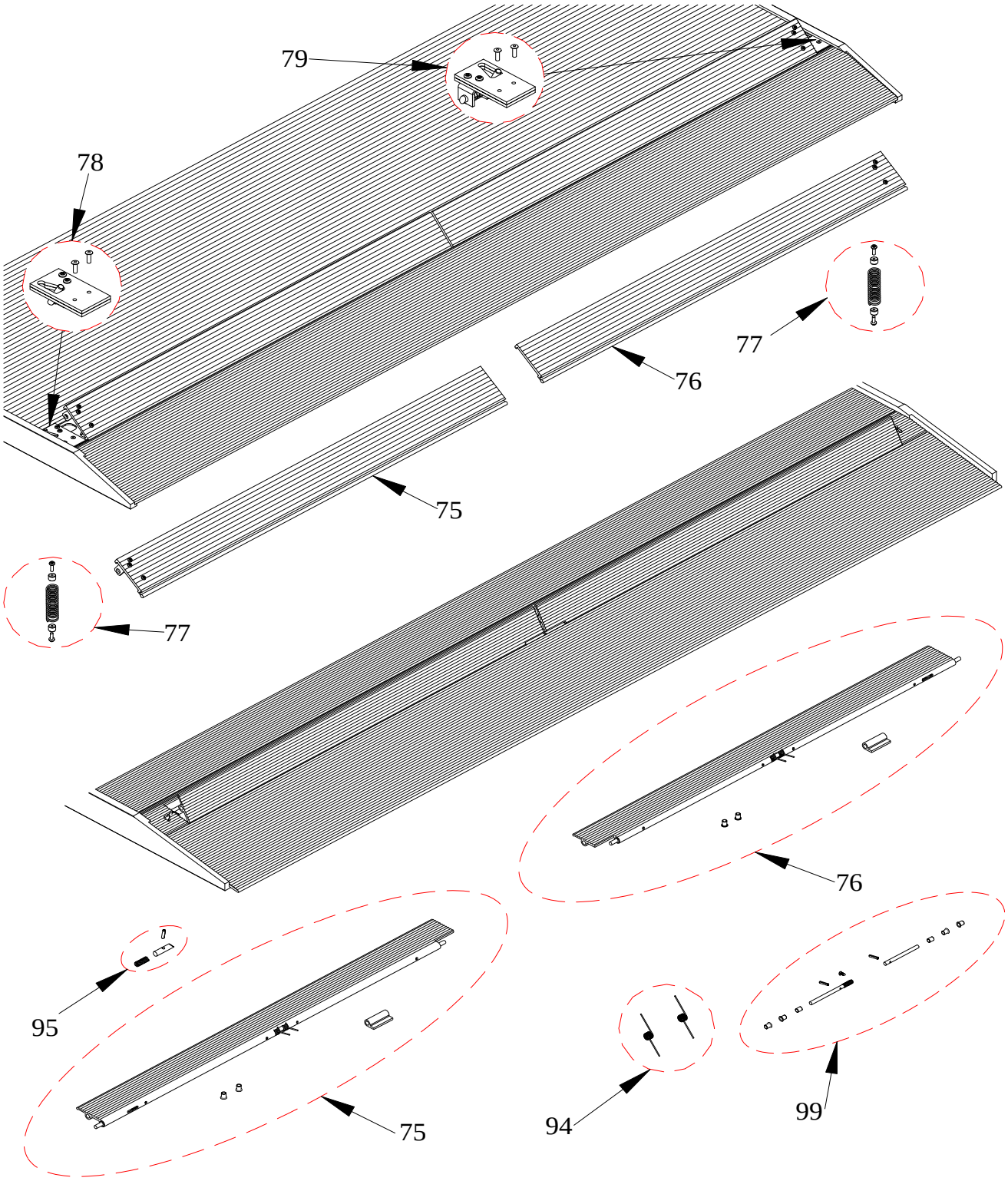

NEW 1600 AND 2000 RAILGATE SERIES PARTS PRICE LIST

Draw. Ref.	Part No.	Description	Qty Required	Sugg. Retail (Each)
1	001718	(73) SC 37+6 Replacement Steel Platform	1	$ 815.00
	001719	(79) SC 37+6 Replacement Steel Platform	1	$ 823.00
	001261	(85) SC 37+6 Replacement Steel Platform	1	$ 834.00
	001262	(89) SC 37+6 Replacement Steel Platform	1	$ 848.00
	001700	(95) SC 37+6 Replacement Steel Platform	1	$ 861.00
	001723	(73) SC 42+6 Replacement Steel Platform	1	$ 1,030.00
	001724	(79) SC 42+6 Replacement Steel Platform	1	$ 1,040.00
	001263	(85) SC 42+6 Replacement Steel Platform	1	$ 1,051.00
	001264	(89) SC 42+6 Replacement Steel Platform	1	$ 1,064.00
	001701	(95) SC 42+6 Replacement Steel Platform	1	$ 1,077.00
	001740	(73) TA 30+12 Replacement SGBR w/Rack	1	$ 1,289.00
	001741	(79) TA 30+12 Replacement SGBR w/Rack	1	$ 1,299.00
	001286	(85) TA 30+12 Replacement SGBR w/Rack	1	$ 1,308.00
	001287	(89) TA 30+12 Replacement SGBR w/Rack	1	$ 1,327.00
	001742	(95) TA 30+12 Replacement SGBR w/Rack	1	$ 1,348.00
	006374	(73) SC 55+12 Replacement Aluminum Platform	1	$ 2,775.00
	006494	(79) SC 55+12 Replacement Aluminum Platform	1	$ 2,843.00
	001720	(85) SC 55+12 Replacement Aluminum Platform	1	$ 2,918.00
	003323	(89) SC 55+12 Replacement Aluminum Platform	1	$ 2,954.00
	003172	(95) SC 55+12 Replacement Aluminum Platform	1	$ 3,067.00
	006419	(85) TA 35+10+12 Replacement Aluminum R-Fold Platform	1	$ 2,681.00
	006420	(89) TA 35+10+12 Replacement Aluminum R-Fold Platform	1	$ 2,909.00
	006422	(85) TA 35+15+6 Replacement Aluminum R-Fold Platform	1	$ 2,799.00
	006446	(89) TA 35+15+6 Replacement Aluminum R-Fold Platform	1	$ 3,027.00
	006447	(85) TA 30+15+6 Replacement Aluminum R-Fold Platform	1	$ 2,681.00
	006448	(89) TA 30+15+6 Replacement Aluminum R-Fold Platform	1	$ 2,909.00
2	003894	Rail (BH) Replacement Platform Chain	2	$ 75.45
	003895	Rail (AB) Replacement Platform Chain	2	$ 66.85
	010895	Rail (AB) 65+6 Replacement Platform Chain	2	$ 75.45
	003896	Rail (BH) 65+6 Replacement Platform Chain	2	$ 80.00
	002863	Rail (R-Fold 30" Base) Replacement Platform Chain	2	$ 59.10
	002864	Rail (R-Fold 35" Base) Replacement Platform Chain	2	$ 63.65
3	000931	Replacement Rail Latch Spring	1	$ 6.25
4	001111	License Plate Mount Kit	1	$ 4.15
5	008618	Replacement Bearing Pad Set (Steel Mainframe)	2	$ 37.30
	008591	Replacement Bearing Pad Set (Aluminum Mainframe)	2	$ 37.30
6	008628	44" Replacement Slider w/Pads-Left Self-Close (Steel Mainframe-BH)	1	$ 211.00
	008629	44" Replacement Slider w/Pads-Right Self-Close (Steel Mainframe-BH)	1	$ 211.00
	011864	36" Replacement Slider w/Pads-Self-Close (Steel Mainframe-AB) after 4/19/11*	2	$ 182.00
	011872	36" Replacement Slider w/Pads-R-Fold (Steel Mainframe-AB) after 4/19/11*	2	$ 182.00
	008654	44" Replacement Slider w/Pads-Left Self-Close (Alum. Mainframe-BH)	1	$ 211.00
	008655	44" Replacement Slider w/Pads-Right Self-Close (Alum. Mainframe-BH)	1	$ 211.00
	011865	36" Replacement Slider w/Pads-Self-Close (Alum. Mainframe-AB)*	2	$ 182.00
	011873	36" Replacement Slider w/Pads-R-Fold (Alum. Mainframe-AB)*	2	$ 182.00
7	000930	Replacement Rail Safety Switch	2	$ 41.95
8	004149	13 Tooth Replacement Sprocket, Pin & Keeper	BH=4, AB=5	$ 51.05
	004191	13 Tooth Replacement Sprocket, Pin & Keeper (All Aluminum)	BH=4, AB=5	$ 61.10
10	000928	Replacement Red Light w/Grommet	4	$ 24.50
11	000926	Replacement Clear Light w/Grommet	2	$ 24.50
12	004036	Replacement License Plate Light & Bracket (154c)	1	$ 23.15
	010199	Replacement License Plate Light & Bracket (H1)	1	$ 23.25
13	004156	Replacement Steel Box Cover w/Lights (73SC) (N)	1	$ 232.00
	004246	Replacement Aluminum Box Cover w/Lights (73SC) (N)	1	$ 412.00
	004157	Replacement Steel Box Cover w/Lights (79SC) (N)	1	$ 241.00
	004247	Replacement Aluminum Box Cover w/Lights (79SC) (N)	1	$ 431.00
	004158	Replacement Steel Box Cover w/Lights (85SC) (N)	1	$ 263.00
	004248	Replacement Aluminum Box Cover w/Lights (85SC) (N)	1	$ 452.00
	004159	Replacement Steel Box Cover w/Lights (89SC) (N)	1	$ 300.00
	004245	Replacement Aluminum Box Cover w/Lights (89SC) (N)	1	$ 468.00
	004160	Replacement Steel Box Cover w/Lights (95SC) (N)	1	$ 326.00
	004249	Replacement Aluminum Box Cover w/Lights (95SC) (N)	1	$ 489.00
	013744	Replacement Steel Box Cover w/Lights (73)(N) LED	1	$ 452.00
	013745	Replacement Steel Box Cover w/Lights (79)(N) LED	1	$ 461.00
	013746	Replacement Steel Box Cover w/Lights (85)(N) LED	1	$ 483.00
	013747	Replacement Steel Box Cover w/Lights (89)(N) LED	1	$ 519.40
	013748	Replacement Steel Box Cover w/Lights (95)(N) LED	1	$ 546.00

NEW 1600 AND 2000 RAILGATE SERIES PARTS PRICE LIST

Draw. Ref.	Part No.	Description	Qty Required	Sugg. Retail (Each)
14	001977	Railgate Replacement Latch Lever	1	$ 46.00
	002005	Aluminum Railgate Replacement Latch Lever	1	$ 46.95
15	002033	Replacement Steel Latch Plate-Right	1	$ 134.00
	000925	Replacement Steel Latch Plate-Left	1	$ 71.20
	002867	Replacement Steel R-fold Latch Plate-Right	1	$ 165.00
	002868	Replacement Steel R-fold Latch Plate-Left	1	$ 101.00
	002006	All Aluminum Railgate Replacement Latch Plate-Right	1	$ 151.00
	002007	All Aluminum Railgate Replacement Latch Plate-Left	1	$ 88.15
	002869	All Aluminum R-fold Railgate Replacement Latch Plate-Right	1	$ 183.00
	002870	All Aluminum R-fold Railgate Replacement Latch Plate-Left	1	$ 119.00
16	000955	Replacement Latch Knob w/Stud	1	$ 6.25
17	000967	Replacement Raise Solenoid-3 Post	1	$ 58.45
18	006597	Replacement Cloth Chain Cover 46"	2	$ 13.00
	006596	Replacement Cloth Chain Cover 38"	2	$ 13.00
	006593	Replacement Cloth Chain Cover 53"	2	$ 13.00
19	000987	Replacement Fixed Control	1	$ 129.00
20	004485	M319 Replacement Pump & Motor (2600psi) 2qt.** 1600# Railgate (73) (N)	1	$ 522.00
	004290	M319 Replacement Pump & Motor (2600psi) 3qt.** 1600# Railgate (N)	1	$ 522.00
	004486	M319 Replacement Pump & Motor (3200psi) 2qt.** 2000# Railgate (73) (N)	1	$ 522.00
	004291	M319 Replacement Pump & Motor (3200psi) 3qt.** 2000# Railgate (N)	1	$ 522.00
21	000989	Replacement Vent Plug	1	$ 4.15
22	N/A	Replacement M319 Pump (only) w/2qt. Tank (2600psi) 1600# Railgate (73) (N) (Discontinued - See Drawing Ref 20)	1	N/A
	N/A	Replacement M319 Pump (only) w/3qt. Tank (2600psi) 1600# Railgate (N) (Discontinued - See Drawing Ref 20)	1	N/A
	N/A	Replacement M319 Pump (only) w/2qt. Tank (3200psi) 2000# Railgate (73) (N) (Discontinued - See Drawing Ref 20)	1	N/A
	N/A	Replacement M319 Pump (only) w/3qt. Tank (3200psi) 2000# Railgate (N) (Discontinued - See Drawing Ref 20)	1	N/A
23	004355	Replacement Monarch Plastic Tank (3qt.)**	1	$ 62.25
	004354	Replacement Monarch Plastic Tank (2qt.)** 73 Railgate	1	$ 62.25
24	000958	Replacement 12 Volt Motor-Only (Monarch)**	1	$ 298.00
25	004708	Replacement 4 Ga. 2 Wire Electric Cable w/Lugs-33 ft.	1	$ 130.00
26	000992	Replacement Copper Lug	6	$ 4.15
27	009760	Railgate Replacement Cylinder (79-95)	1	$ 419.00
	009757	Railgate Replacement Cylinder (73)	1	$ 419.00
28	008222	Replacement Rail Cylinder Pin & Keeper	1	$ 30.50
	008179	Replacement Rail Cylinder Pin & Keeper (Alum)	1	$ 35.70
30	000973	Replacement Monarch Lee Check Valve	1	$ 29.95
31	000917	Replacement 3/8"x9/16"x90 Degree Steel Cylinder Elbow	1	$ 10.55
	012607	Replacement 90 Degree Elbow (Male 9/16 ORB x Female 9/16 ORB)	1	$ 10.55
32	012966	Replacement Flow Control Complete (9/16" M x 7/16" F x 0.078") w/ Adapters for (3/8" M x 1/4" F x 0.078")	1	$ 51.40
33	003221	Cylinder Shaft w/Sprockets Assembly (Rail) Includes: Cylinder Repair Kit	1	$ 384.00
	003287	Cylinder Shaft w/Sprockets Assembly (73 Rail) Includes: Cylinder Repair Kit	1	$ 384.00
34	003257	2"x35" Replacement Cylinder Barrel (Rail) Includes: Cylinder Repair Kit	1	$ 300.00
	003290	2"x29" Replacement Cylinder Barrel (73 Rail) Includes: Cylinder Repair Kit	1	$ 300.00
35	006834	Replacement Cylinder Clamp (Rail)	1	$ 8.20
	006835	Replacement Cylinder Clamp (All Aluminum Rail)	1	$ 9.40
37	004188	19-Tooth Repair Sprocket with 3/4" x 2" Pin & Keeper	1	$ 53.15
38	004189	25-Tooth Repair Sprocket with 3/4" x 2" Pin & Keeper	1	$ 77.70
39	012609	Replacement 1/4"x20" Hydraulic Hose w/ Adapters (79,85,89,95)	1	$ 47.20
	012610	Replacement 1/4"x15" Hydraulic Hose w/ Adapters (73)	1	$ 47.20
40	000944	Replacement 90 Degree Elbow (Male 9/16 O-ring Boss x Female 1/4 NPTF)	1	$ 15.40
	012611	Replacement 90 Degree Elbow (Male 9/16 O-ring Boss x Male 7/16 JIC)	1	$ 10.55
41	008020	173 Pitch Replacement Roller Chain Bed-Height Passenger's Side	1	$ 154.00
	008021	281 Pitch Replacement Roller Chain Above-Bed Passenger's Side	1	$ 237.00
42	008030	Replacement Roller Chain Attachment Fitting	2	$ 26.05
43	008022	219 Pitch Replacement Roller Chain Bed-Height Driver's Side	1	$ 186.00
	008023	325 Pitch Replacement Roller Chain Above-Bed Driver's Side	1	$ 266.00
	008035	229 Pitch Replacement Roller Chain Bed-Height Driver's Side (95)	1	$ 193.00
	008044	335 Pitch Replacement Roller Chain Above-Bed Driver's Side (95)	1	$ 269.00

NEW 1600 AND 2000 RAILGATE SERIES PARTS PRICE LIST

Draw. Ref.	Part No.	Description	Qty Required	Sugg. Retail (Each)
44	007947	Roller Chain Adjustment Screw, Clevis & Pin	2	$ 31.90
46	007292	Replacement Steel Rail Roller Chain Cover (Above-Bed) (N)	2	$ 20.50
	007293	Replacement Aluminum Rail Roller Chain Cover (Above-Bed) (N)	2	$ 27.25
47	000998	Replacement 150 Amp Manual Reset Circuit Breaker	1	$ 61.10
48	004162	Replacement Steel AB Sprocket Assembly	2	$ 61.10
	004161	Replacement Alum. AB Sprocket Assembly	2	$ 61.10
49	004197	Replacement Steel BH Outrail Cap	2	$ 20.50
	004196	Replacement Alum BH Outrail Cap	2	$ 22.55
51	006437	76-1/2" Replacement Hinge Tube (73)	1	$ 88.55
	006435	82-1/2"" Replacement Hinge Tube (79)	1	$ 88.55
	006433	88" Replacement Hinge Tube (85)	1	$ 88.55
	006434	92" Replacement Hinge Tube (89)	1	$ 88.55
	006436	98" Replacement Hinge Tube (95)	1	$ 88.55
52	008058	Railgate Replacement Self-Close Linkage Only (Excludes Rod)	1	$ 49.85
	008092	Railgate Replacement Self-Close Rod & Linkage (73)	1	$ 83.70
	008061	Railgate Replacement Self-Close Rod & Linkage (79)	1	$ 83.70
	008060	Railgate Replacement Self-Close Rod & Linkage (85)	1	$ 83.70
	008059	Railgate Replacement Self-Close Rod & Linkage (89)	1	$ 83.70
	007995	Railgate Replacement Self-Close Rod & Linkage (95)	1	$ 83.70
	008093	Aluminum Railgate Replacement Self-Close Rod & Linkage (73)	1	$ 91.70
	008094	Aluminum Railgate Replacement Self-Close Rod & Linkage (79)	1	$ 91.70
	008071	Aluminum Railgate Replacement Self-Close Rod & Linkage (85)	1	$ 91.70
	008072	Aluminum Railgate Replacement Self-Close Rod & Linkage (89)	1	$ 91.70
	008095	Aluminum Railgate Replacement Self-Close Rod & Linkage (95)	1	$ 91.70
53	008137	Replacement Steel Platform Self-Close Arm Kit- Left (N)	1	$ 53.15
	008140	Replacement Aluminum Platform Self-Close Arm Kit- Left (N)	1	$ 63.00
	008128	Replacement All Aluminum Self-Close Arm Kit- Left (N)	1	$ 91.90
54	008136	Replacement Steel Platform Self-Close Arm Kit- Right (N)	1	$ 53.15
	008139	Replacement Aluminum Platform Self-Close Arm Kit- Right (N)	1	$ 63.00
	007290	Replacement All Aluminum Self-Close Arm Kit- Right (N)	1	$ 91.90
55	008138	2" Replacement Self-Close Roller Kit	2	$ 14.35
56	008067	Repair Self-Close Arm Bushing Kit-Steel Platform	2	$ 12.90
	008068	Repair Self-Close Arm Bushing Kit-Aluminum Platform	2	$ 19.55
59	000922	Replacement 0.142"x1.125"x5.5" Extension Spring (Rail)	2	$ 9.10
65	008169	(73SC) Replacement Safety Trip Bar-65-1/2" (N)	1	$ 48.60
	008170	(79SC) Replacement Safety Trip Bar-71-1/2" (N)	1	$ 48.60
	008171	(85SC)Replacement Safety Trip Bar-77-1/2" (N)	1	$ 48.60
	008172	(89SC) Replacement Safety Trip Bar-81-1/2" (N)	1	$ 48.60
	008173	(95SC) Replacement Safety Trip Bar-87-1/2" (N)	1	$ 48.60
	008129	(A73SC) Replacement Safety Trip Bar-65-1/2" (N)	1	$ 81.60
	008130	(A79SC) Replacement Safety Trip Bar-71-1/2" (N)	1	$ 81.60
	008131	(A85SC) Replacement Safety Trip Bar-77-1/2" (N)	1	$ 81.60
	008132	(A89SC) Replacement Safety Trip Bar-81-1/2" (N)	1	$ 81.60
	008133	(A95SC) Replacement Safety Trip Bar-87-1/2" (N)	1	$ 81.60
66	009645	Release Solenoid External Assembly w/Connector	1	$ 96.75
67	001110	2" Cylinder Repair Kit (Rail)	1	$ 158.00
68	000920	Replacement Steel Platform Triangle Deadman	2	$ 4.15
	000921	Replacement Aluminum Platform Triangle Deadman	2	$ 6.25
70	000914	Rail Pin & Padlock w/Keys	1	$ 15.95
75	008363	Replacement Left Cartstop Assembly (73) w/Spring (not in taper)	1	$ 125.00
	008390	Replacement Left Cartstop Assembly (79) w/Spring (not in taper)	1	$ 127.00
	008391	Replacement Left Cartstop Assembly (85) w/Spring (not in taper)	1	$ 129.00
	008392	Replacement Left Cartstop Assembly (89) w/Spring (not in taper)	1	$ 131.00
	008365	Replacement Left Cartstop Assembly (95) w/Spring (not in taper)	1	$ 133.00
	013568	Replacement Left Cartstop Assembly (73) w/Spring (in taper)	1	$ 162.00
	013569	Replacement Left Cartstop Assembly (79) w/Spring (in taper)	1	$ 165.00
	013570	Replacement Left Cartstop Assembly (85) w/Spring (in taper)	1	$ 167.00
	013571	Replacement Left Cartstop Assembly (89) w/Spring (in taper)	1	$ 169.00
	013572	Replacement Left Cartstop Assembly (95) w/Spring (in taper)	1	$ 174.00
76	008364	Replacement Right Cartstop Assembly (73) w/Spring (not in taper)	1	$ 125.00
	008393	Replacement Right Cartstop Assembly (79) w/Spring (not in taper)	1	$ 127.00
	008394	Replacement Right Cartstop Assembly (85) w/Spring (not in taper)	1	$ 129.00
	008395	Replacement Right Cartstop Assembly (89) w/Spring (not in taper)	1	$ 131.00
	008366	Replacement Right Cartstop Assembly (95) w/Spring (not in taper)	1	$ 133.00
	013573	Replacement Right Cartstop Assembly (73) w/Spring (in taper)	1	$ 162.00
	013574	Replacement Right Cartstop Assembly (79) w/Spring (in taper)	1	$ 165.00
	013575	Replacement Right Cartstop Assembly (85) w/Spring (in taper)	1	$ 167.00
	013576	Replacement Right Cartstop Assembly (89) w/Spring (in taper)	1	$ 169.00
	013577	Replacement Right Cartstop Assembly (95) w/Spring (in taper)	1	$ 174.00

NEW 1600 AND 2000 RAILGATE SERIES PARTS PRICE LIST

Draw. Ref.	Part No.	Description	Qty Required	Sugg. Retail (Each)
77	008396	Replacement Cartstop Spring Assembly (not in taper)	2	$ 19.80
78	008397	Replacement Cartstop Latch Assembly (L) (not in taper)	1	$ 74.95
79	008398	Replacement Cartstop Latch Assembly (R) (not in taper)	1	$ 74.95
82	006466	Replacement R-Fold Hinge Kit	2	$ 66.35
83	002992	Replacement R-Fold Latch Kit	2	$ 36.05
84	002510	Replacement Rail Platform Stop (TA)	2	$ 40.90
85	002324	Replacement Horizontal Tube Assembly (BR)	2	$ 123.00
86	002325	Replacement Bottle Rack Fence-Left	1	$ 195.00
87	002333	Replacement Bottle Rack Taper (73)	1	$ 84.75
	002326	Replacement Bottle Rack Taper (79)	1	$ 91.50
	002327	Replacement Bottle Rack Taper (85)	1	$ 105.00
	002328	Replacement Bottle Rack Taper (89)	1	$ 113.00
	002332	Replacement Bottle Rack Taper (95)	1	$ 124.00
88	002329	Replacement Bottle Rack Fence-Right	1	$ 195.00
89	000919	Replacement Gas Bottle Rack Lynch Pin	2	$ 4.55
90	002330	Replacement Pivot Plate (BR)	2	$ 31.35
91	002331	Replacement Pivot Pin w/Snap Ring (BR)	4	$ 15.95
92	002886	1/2"SQ. Torsion Spring Kit (73Rail)	1	$ 273.00
	001992	1/2"SQ. Torsion Spring Kit (79Rail)	1	$ 273.00
	001995	1/2"SQ. Torsion Spring Kit (85Rail)	1	$ 273.00
	001998	1/2"SQ. Torsion Spring Kit (89Rail)	1	$ 273.00
	002224	1/2"SQ. Torsion Spring Kit (95Rail)	1	$ 273.00
	002887	1/2"SQ. Torsion Spring Kit (A73Rail)	1	$ 273.00
	002889	1/2"SQ. Torsion Spring Kit (A79Rail)	1	$ 273.00
	002892	1/2"SQ. Torsion Spring Kit (A85Rail)	1	$ 273.00
	002895	1/2"SQ. Torsion Spring Kit (A89Rail)	1	$ 273.00
	002897	1/2"SQ. Torsion Spring Kit (A95Rail)	1	$ 273.00
	002054	5/8"SQ. Torsion Spring Kit (73Rail)	1	$ 273.00
	001993	5/8"SQ. Torsion Spring Kit (79Rail)	1	$ 273.00
	001996	5/8"SQ. Torsion Spring Kit (85Rail)	1	$ 273.00
	001999	5/8"SQ. Torsion Spring Kit (89Rail)	1	$ 273.00
	002034	5/8"SQ. Torsion Spring Kit (95Rail)	1	$ 273.00
	002888	5/8"SQ. Torsion Spring Kit (A73Rail)	1	$ 273.00
	002890	5/8"SQ. Torsion Spring Kit (A79Rail)	1	$ 273.00
	002893	5/8"SQ. Torsion Spring Kit (A85Rail)	1	$ 273.00
	002202	5/8"SQ. Torsion Spring Kit (A89Rail)	1	$ 273.00
	002898	5/8"SQ. Torsion Spring Kit (A95Rail)	1	$ 273.00
	001994	3/4"SQ. Torsion Spring Kit (79Rail)	1	$ 273.00
	001997	3/4"SQ. Torsion Spring Kit (85Rail)	1	$ 273.00
	002000	3/4"SQ. Torsion Spring Kit (89Rail)	1	$ 273.00
	002087	3/4"SQ. Torsion Spring Kit (95Rail)	1	$ 273.00
	002891	3/4"SQ. Torsion Spring Kit (A79Rail)	1	$ 273.00
	002894	3/4"SQ. Torsion Spring Kit (A85Rail)	1	$ 273.00
	002896	3/4"SQ. Torsion Spring Kit (A89Rail)	1	$ 273.00
	002899	3/4"SQ. Torsion Spring Kit (A95Rail)	1	$ 273.00
93	000918	Replacement Bottle Rack Chain - 3/16" Zinc x75 Link	2	$ 30.60
94	013566	Repair Cartstop Torsion Spring Kit (in taper)	1	$ 41.70
	014542	Removable Cart Stop Torsion Spring Kit (in taper)	2	$ 29.40
95	014544	Replacement Rail Cart Stop Latch Kit (in taper)	2	$ 19.90
99	014543	Removable Cart Stop Replacement Hinge Kit (in taper)	2	$ 30.95

**Please provide the liftgate Model and Serial numbers when ordering repair parts.
Note: The above prices are for standard equipment only. Call the factory for pricing of optional equipment or special features.

*Please verify slider length before ordering repair parts. If you have 32" sliders, they can be replaced with 36" sliders in pairs, but you will lose some travel. Call the Tommy Gate for more details.

1330 CANTILEVER SERIES PARTS DRAWING

FOR ALL MODELS

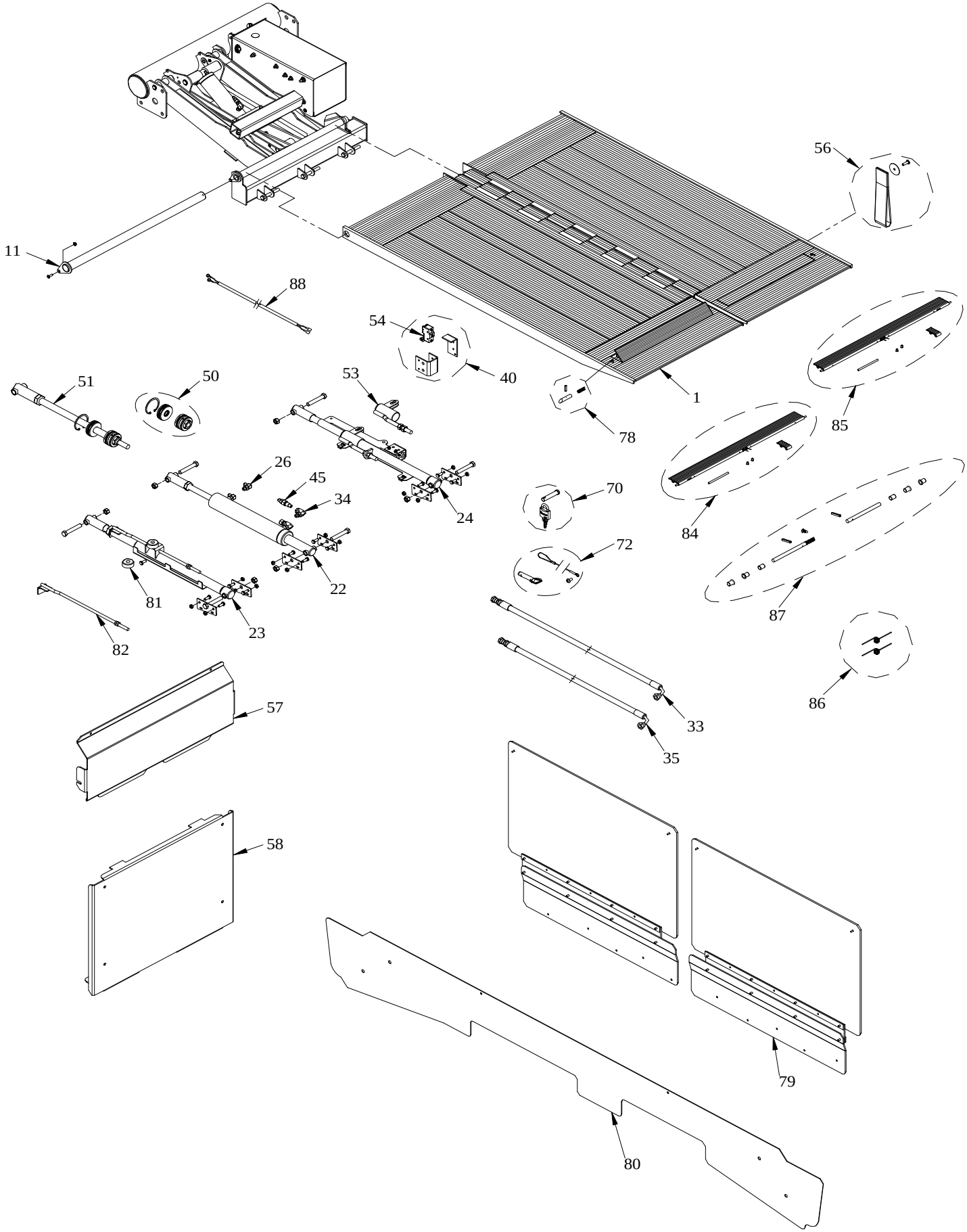

1330 CANTILEVER SERIES PARTS DRAWING

FOR ALL MODELS

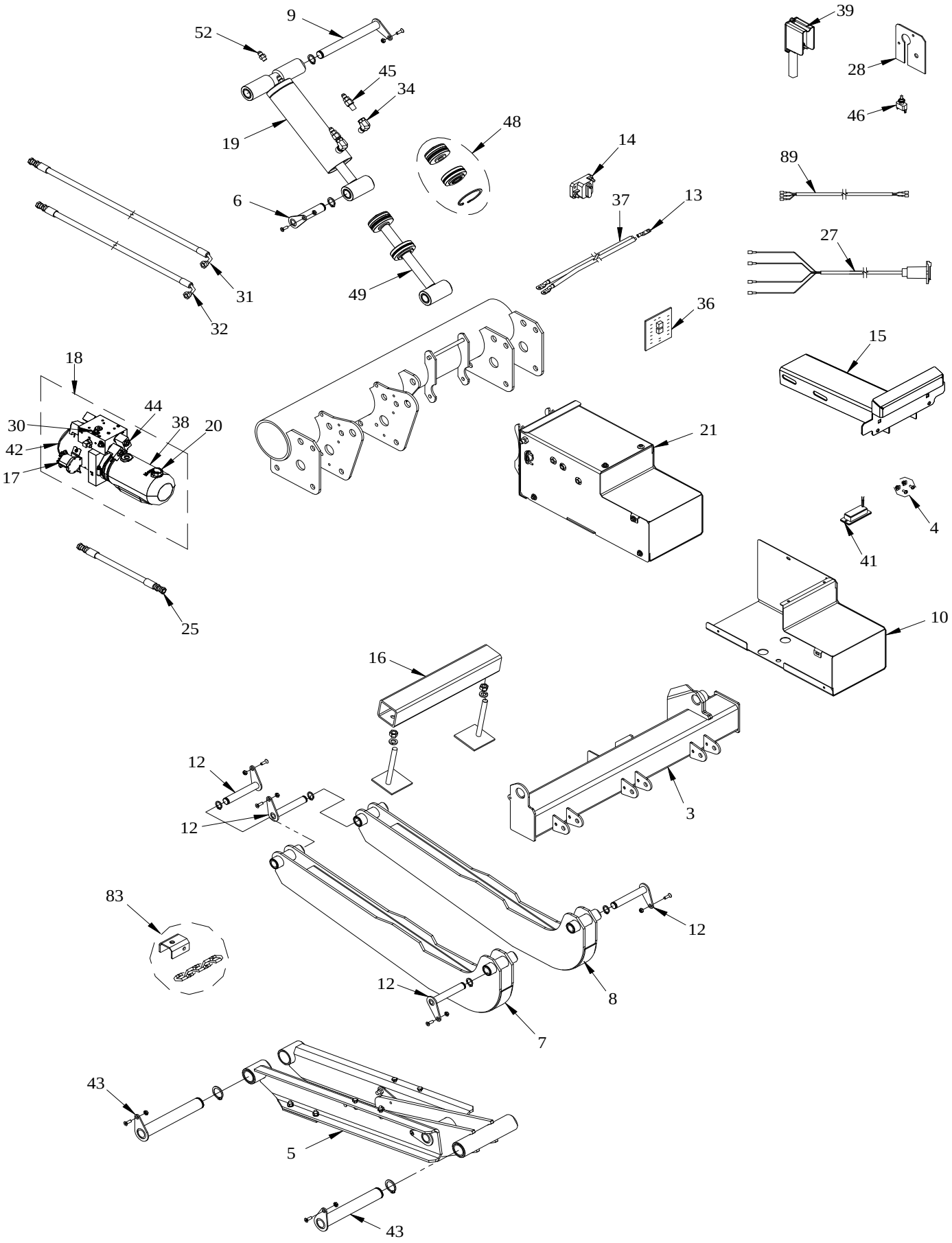

1330 CANTILEVER SERIES PARTS PRICE LIST

Draw. Ref.	Part No.	Description	Qty Required	Sugg. Retail (Each)
1	011253	52" Replacement Aluminum Platform	1	$ 2,699.00
	011252	71" Replacement Aluminum Platform	1	$ 3,298.00
3	011262	Cantilever Replacement Platform Pivot Sub Assembly	1	$ 377.00
4	001111	License Plate Mount Kit	1	$ 4.15
5	011263	Cantilever Replacement Lift Arm w/Pins & Keepers	1	$ 599.00
6	011264	7/8" Replacement Cantilever Cylinder Rod Pin w/Keeper	1	$ 33.75
7	011265	Cantilever Replacement Tension Arm w/Pins & Keepers (Left)	1	$ 242.00
	014114	Cantilever Replacement Tension Arm w/Pins & Keepers (Left) Transit	1	$ 242.00
8	011286	Cantilever Replacement Tension Arm w/Pins & Keepers (Right)	1	$ 242.00
	014117	Cantilever Replacement Tension Arm w/Pins & Keepers (Right) Transit	1	$ 242.00
9	011266	7/8" Replacement Cantilever Cylinder Base Pin w/Keeper	1	$ 37.80
10	011267	Replacement Cantilever Pump Box (19-38/") Cover	1	$ 46.90
	014107	Replacement Cantilever Pump Box (18-13/16") Cover Transit	1	$ 46.90
11	011254	Replacement Cantilever Platform Pivot Pin	1	$ 144.00
12	011268	3/4" Replacement Cantilever Tension Arm Pin w/Keeper	4	$ 26.65
13	000992	Replacement Copper Lug	6	$ 4.15
14	000998	Replacement 150 Amp Manual Reset Circuit Breaker	1	$ 61.10
15	011269	Replacement License Plate Bracket w/Light (Sprinter)	1	$ 95.00
	011270	Replacement License Plate Bracket w/Light (Nissan)	1	$ 40.65
	014115	Replacement Cantilever License Plate Bracket (Sprinter) Side Plate Mount	1	$ 59.70
16	011272	Replacement Cantilever Stabilizer Tube	1	$ 61.20
	014116	Replacement Cantilever Stabilizer Tube (Transit)	1	$ 61.20
17	000995	Replacement Solenoid - 4 Post (650)	1	$ 58.45
18	011273	Replacement 1330 Cantilever Pump & Motor Unit (2750psi) (19-3/8" Pump Box)	1	$ 1,053.00
	014108	Replacement 1330 Cantilever Pump & Motor Unit (2750psi) (18-13/16" Pump Box)	1	$ 1,053.00
19	011274	Replacement Cantilever Lift Cylinder	1	$ 539.00
20	011445	Replacement Vent Plug (Cantilever) Plastic	1	$ 6.50
	000989	Replacement Vent Plug (Cantilever) Steel	1	$ 4.15
21	011275	Replacement Cantilever Pump Box (19-3/8")	1	$ 131.00
	014106	Replacement Cantilever Pump Box (18-13/16")	1	$ 131.00
22	011261	Replacement Fold Cylinder (Cantilever)	1	$ 539.00
23	011260	Replacement Platform Support Arm (Driver)	1	$ 291.00
24	011259	Replacement Platform Support Arm (Passenger)	1	$ 318.00
25	011452	Replacement Hydraulic Hose- Power Unit	1	$ 33.60
26	011283	Replacement 04MORB x 04MJIC x 90 Degree Cylinder Elbow	1	$ 6.50
27	011278	Replacement Pendant Supply Cable (Cantilever)	1	$ 90.65
28	011446	Replacement Cantilever Pendant Mounting Bracket (Sprinter, Promaster, & Transit)	1	$ 10.10
	011447	Replacement Cantilever Pendant Mounting Bracket (Nissan)	1	$ 10.10
	011448	Replacement Cantilever Pendant Mounting Bracket (Chevrolet)	1	$ 10.10
30	011950	Replacement Cantilever Poppet Check Valve	2	$ 28.55
31	011257	Replacement Hydraulic Hose- Lift Cylinder Long	1	$ 53.35
32	011258	Replacement Hydraulic Hose- Lift Cylinder Short	1	$ 29.70
33	011255	Replacement Hydraulic Hose- Fold Cylinder Long	1	$ 36.80
34	011276	Replacement 04MORB x 04FPT x 90 Degree Cylinder Elbow	2	$ 11.70
35	011256	Replacement Hydraulic Hose- Fold Cylinder Short	1	$ 50.20
36	011449	Replacement Cantilever Circuit Board	1	$ 202.00
37	004708	Replacement 4 Ga. 2 Wire Electric Cable w/Lugs-33 ft.	1	$ 130.00
38	011277	Replacement 2qt. Monarch Plastic Tank (Cantilever) **	1	$ 62.25
39	009573	Replacement Pendant Control	1	$ 193.00
40	011271	Replacement Limit Switch Kit (Cantilever)	1	$ 70.20
41	010199	Replacement License Plate Light (H1)	1	$ 23.25
42	000958	Replacement 12 Volt Motor-Only (Monarch)**	1	$ 298.00
43	011280	1-1/4" Replacement Cantilever Lift Arm Pin w/Keeper	2	$ 56.65
44	011947	Replacement 2Way/2Pos Solenoid Assembly w/Connector	2	$ 96.75
	011948	Replacement 4Way/2Pos Solenoid Assembly w/Connector	2	$ 134.00
	011949	Replacement 3Way/2Pos Solenoid Assembly w/Connector	1	$ 121.00
45	011281	Replacement Flow Control (Cantilever)	2	$ 49.50
46	000983	Replacement Toggle Switch Only	2	$ 20.50
47	N/A	Replacement Pump (only) w/2qt. Tank 1330 Cantilever (2750psi) (Discontinued - See Drawing Ref 18)	1	N/A
48	011450	Lift Cylinder Seal Repair Kit (Cantilever)	1	$ 107.00
49	011279	Lift Cylinder Shaft Kit (Cantilever)	1	$ 344.00
50	011453	Fold Cylinder Seal Repair Kit (Cantilever)	1	$ 107.00
51	011454	Fold Cylinder Shaft Kit (Cantilever)	1	$ 344.00
52	011455	Replacement 04MORB-04MJIC Adapter	1	$ 6.50
53	013384	Repair Up Stop Push off Assembly (Cantilever)	1	$ 57.40
54	000930	Replacement Rail Safety Switch	1	$ 41.95
56	011844	Replacement Handle Strap (Cantilever)	1	$ 13.00
57	011845	Replacement Upper Platform Cover (Cantilever)	1	$ 86.95
58	011846	Replacement Lower Platform Cover (Cantilever)	1	$ 110.00

1330 CANTILEVER SERIES PARTS PRICE LIST

Draw. Ref.	Part No.	Description	Qty Required	Sugg. Retail (Each)
70	000914	Replacement Locking Pin & Padlock w/Keys (Cantilever)	1	$ 15.95
72	011284	Replacement Latch Pin w/Lanyard (Cantilever)	1	$ 11.75
78	011285	Replacement Cantilever Cart Stop Latch Kit	2	$ 19.90
79	013661	Replacement Cantilever Nissan NV Bridge	1	$ 336.00
	011675	Replacement Cantilever Sprinter Bridge	1	$ 336.00
	014598	Replacement Cantilever Ford Transit Bridge	1	$ 336.00
80	013666	Replacement Rear Cover Nissan	1	$ 88.95
	013182	Replacement Rear Cover Chevy	1	$ 88.95
	014599	Replacement Rear Cover Ford Transit	1	$ 88.95
81	012216	Replacement Driver Side Support Arm Rubber Bumper	1	$ 6.85
82	012623	Replacement Up Stop Rod Assembly	1	$ 43.25
83	014436	Replacement Chain-up Feature	1	$ 26.65
84	014540	Replacement Primary Cart Stop	1	$ 125.00
85	014541	Replacement Secondary Cart Stop	1	$ 125.00
86	013566	Repair Cart Stop Torsion Spring Kit (non-removable cart stop)	1	$ 41.70
	014542	Removable Cart Stop Torsion Spring Kit	2	$ 29.40
87	014543	Removable Cart Stop Replacement Hinge Kit	2	$ 30.95
88	014674	Replacement Limit Switch Wire Harness(Cantilever)	1	$ 45.80
89	014675	Replacement Toggle Switch Wire Harness (Cantilever)	1	$ 55.80

**Please provide the liftgate Model and Serial numbers when ordering repair parts.
Note: The above prices are for standard equipment only. Call the factory for pricing of optional equipment or special features.

2500 AND 3000 RAILGATE SERIES
REPAIR PARTS DRAWING

FOR MODELS 85, 89 & 95

(WITH INTERNAL TIMED ELECTRIC TOGGLE CONTROL)

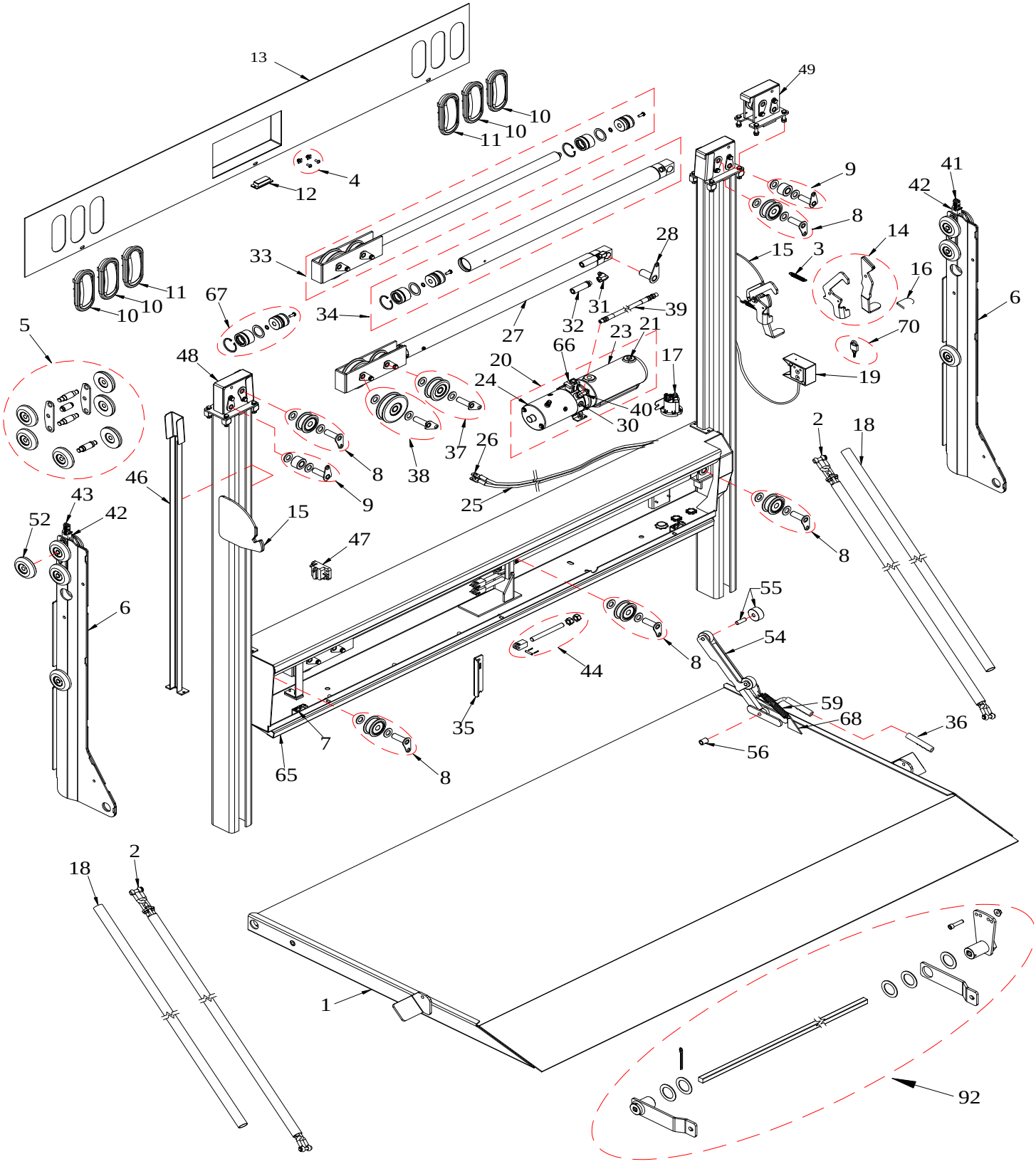

2500 AND 3000 RAILGATE SERIES
PARTS DRAWING
FOR MODELS 85, 89 & 95

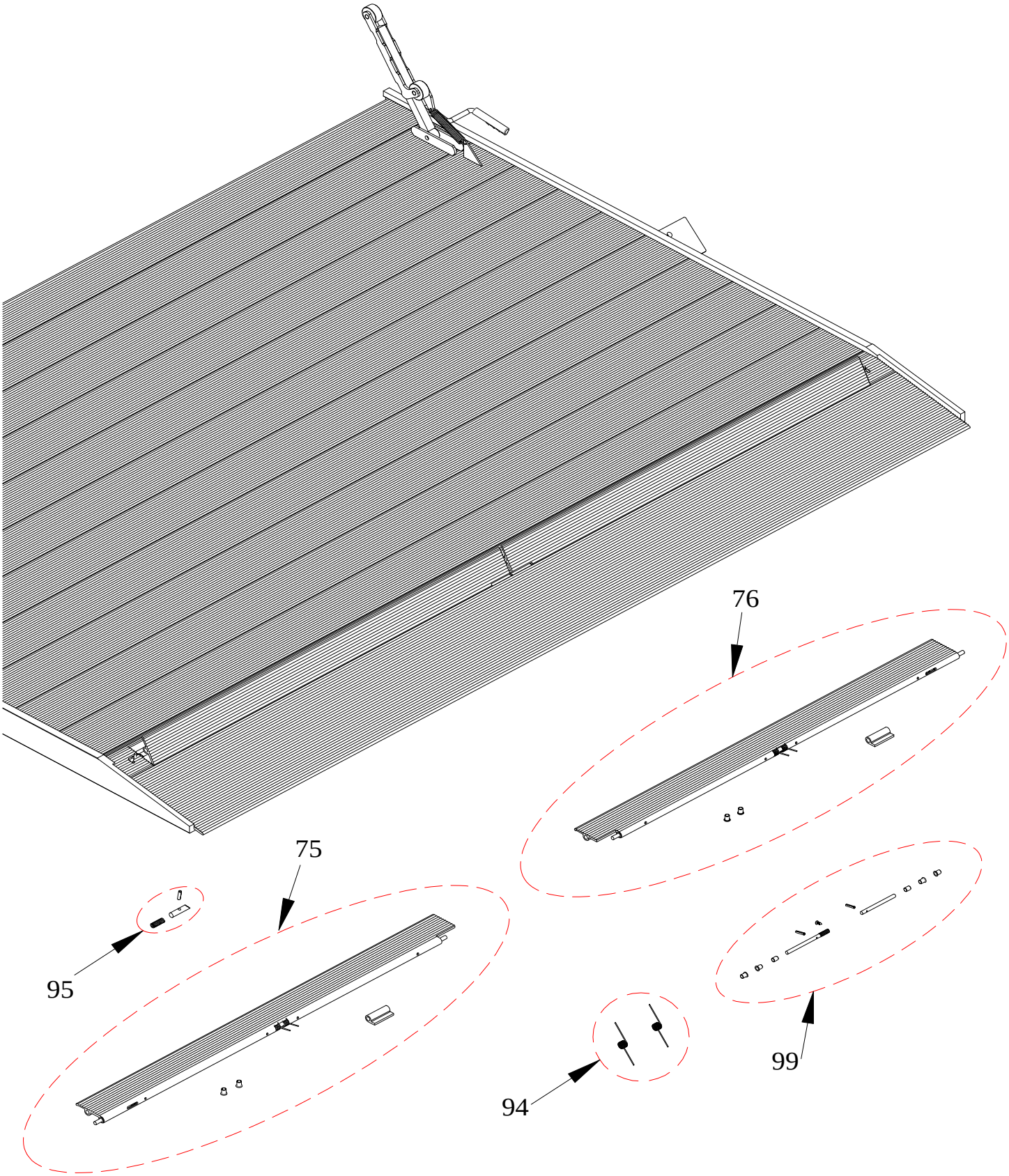

2500 AND 3000 RAILGATE SERIES PARTS PRICE LIST

Draw. Ref.	Part No.	Description	Qty Required	Sugg. Retail (Each)
1	011711	(85) 36+12 SC/TA Replacement Steel Platform	1	$ 1,215.00
	011712	(89) 36+12 SC/TA Replacement Steel Platform	1	$ 1,243.00
	011713	(95) 36+12 SC/TA Replacement Steel Platform	1	$ 1,329.00
	011714	(85) 42+12 SC/TA Replacement Steel Platform	1	$ 1,326.00
	011715	(89) 42+12 SC/TA Replacement Steel Platform	1	$ 1,352.00
	011716	(95) 42+12 SC/TA Replacement Steel Platform	1	$ 1,380.00
	011717	(85) 48+12 SC/TA Replacement Steel Platform	1	$ 1,330.00
	011718	(89) 48+12 SC/TA Replacement Steel Platform	1	$ 1,362.00
	011719	(95) 48+12 SC/TA Replacement Steel Platform	1	$ 1,390.00
	011720	(85) 35+12 SC/TA Replacement Aluminum Platform	1	$ 2,223.00
	011721	(89) 35+12 SC/TA Replacement Aluminum Platform	1	$ 2,297.00
	011722	(95) 35+12 SC/TA Replacement Aluminum Platform	1	$ 2,409.00
	011723	(85) 40+12 SC/TA Replacement Aluminum Platform	1	$ 2,395.00
	011724	(89) 40+12 SC/TA Replacement Aluminum Platform	1	$ 2,478.00
	011725	(95) 40+12 SC/TA Replacement Aluminum Platform	1	$ 2,601.00
	011726	(85) 45+12 SC/TA Replacement Aluminum Platform	1	$ 2,622.00
	011727	(89) 45+12 SC/TA Replacement Aluminum Platform	1	$ 2,712.00
	011728	(95) 45+12 SC/TA Replacement Aluminum Platform	1	$ 2,849.00
	011729	(85) 50+12 SC/TA Replacement Aluminum Platform	1	$ 2,793.00
	011730	(89) 50+12 SC/TA Replacement Aluminum Platform	1	$ 2,892.00
	011731	(95) 50+12 SC/TA Replacement Aluminum Platform	1	$ 3,041.00
	011732	(85) 55+12 SC/TA Replacement Aluminum Platform	1	$ 2,962.00
	011733	(89) 55+12 SC/TA Replacement Aluminum Platform	1	$ 3,069.00
	011734	(95) 55+12 SC/TA Replacement Aluminum Platform	1	$ 3,230.00
	011735	(85) 60+12 SC/TA Replacement Aluminum Platform	1	$ 3,114.00
	011736	(89) 60+12 SC/TA Replacement Aluminum Platform	1	$ 3,230.00
	011737	(95) 60+12 SC/TA Replacement Aluminum Platform	1	$ 3,403.00
	011738	(85) 65+12 SC/TA Replacement Aluminum Platform	1	$ 3,284.00
	011739	(89) 65+12 SC/TA Replacement Aluminum Platform	1	$ 3,408.00
	011740	(95) 65+12 SC/TA Replacement Aluminum Platform	1	$ 3,594.00
	011741	(85) 70+12 SC/TA Replacement Aluminum Platform	1	$ 3,455.00
	011742	(89) 70+12 SC/TA Replacement Aluminum Platform	1	$ 3,587.00
	011743	(95) 70+12 SC/TA Replacement Aluminum Platform	1	$ 3,784.00
	011744	(85) 35+12 SC/TA Replacement Aluminum Platform w/Cart Stop	1	$ 2,447.00
	011745	(89) 35+12 SC/TA Replacement Aluminum Platform w/Cart Stop	1	$ 2,528.00
	011746	(95) 35+12 SC/TA Replacement Aluminum Platform w/Cart Stop	1	$ 2,649.00
	011747	(85) 40+12 SC/TA Replacement Aluminum Platform w/Cart Stop	1	$ 2,622.00
	011748	(89) 40+12 SC/TA Replacement Aluminum Platform w/Cart Stop	1	$ 2,706.00
	011749	(95) 40+12 SC/TA Replacement Aluminum Platform w/Cart Stop	1	$ 2,841.00
	011750	(85) 45+12 SC/TA Replacement Aluminum Platform w/Cart Stop	1	$ 2,845.00
	011751	(89) 45+12 SC/TA Replacement Aluminum Platform w/Cart Stop	1	$ 2,946.00
	011752	(95) 45+12 SC/TA Replacement Aluminum Platform w/Cart Stop	1	$ 3,088.00
	011753	(85) 50+12 SC/TA Replacement Aluminum Platform w/Cart Stop	1	$ 3,017.00
	011754	(89) 50+12 SC/TA Replacement Aluminum Platform w/Cart Stop	1	$ 3,122.00
	011755	(95) 50+12 SC/TA Replacement Aluminum Platform w/Cart Stop	1	$ 3,280.00
	011756	(85) 55+12 SC/TA Replacement Aluminum Platform w/Cart Stop	1	$ 3,179.00
	011757	(89) 55+12 SC/TA Replacement Aluminum Platform w/Cart Stop	1	$ 3,300.00
	011758	(95) 55+12 SC/TA Replacement Aluminum Platform w/Cart Stop	1	$ 3,469.00
	011759	(85) 60+12 SC/TA Replacement Aluminum Platform w/Cart Stop	1	$ 3,336.00
	011760	(89) 60+12 SC/TA Replacement Aluminum Platform w/Cart Stop	1	$ 3,459.00
	011761	(95) 60+12 SC/TA Replacement Aluminum Platform w/Cart Stop	1	$ 3,643.00
	011762	(85) 65+12 SC/TA Replacement Aluminum Platform w/Cart Stop	1	$ 3,508.00
	011763	(89) 65+12 SC/TA Replacement Aluminum Platform w/Cart Stop	1	$ 3,639.00
	011764	(95) 65+12 SC/TA Replacement Aluminum Platform w/Cart Stop	1	$ 3,833.00
	011765	(85) 70+12 SC/TA Replacement Aluminum Platform w/Cart Stop	1	$ 3,679.00
	011766	(89) 70+12 SC/TA Replacement Aluminum Platform w/Cart Stop	1	$ 3,801.00
	011767	(95) 70+12 SC/TA Replacement Aluminum Platform w/Cart Stop	1	$ 4,025.00
2	011768	Rail (55+12 & Below) Replacement Platform Chain (37 Links)	2	$ 78.35
	011769	Rail (60+12 & Above) Replacement Platform Chain (47 Links)	2	$ 84.55
3	000931	Replacement Rail Latch Spring	1	$ 6.25
4	001111	License Plate Mount Kit	1	$ 4.15
5	011772	Replacement Slider Wheel Set	2	$ 371.00
6	011770	Replacement Slider	2	$ 549.00
7	000930	Replacement Rail Safety Switch	2	$ 41.95
8	011773	Replacement 3.00 OD Pulley, Pin & Keeper	5	$ 102.00
9	011774	Replacement Idler Pulley, Pin & Keeper	2	$ 26.65

2500 AND 3000 RAILGATE SERIES PARTS PRICE LIST

Draw. Ref.	Part No.	Description	Qty Required	Sugg. Retail (Each)
10	000928	Replacement Red Light w/Grommet	4	$ 24.50
11	000926	Replacement Clear Light w/Grommet	2	$ 24.50
12	010199	Replacement License Plate Light & Bracket (H1)	1	$ 23.25
13	011777	Replacement Steel Box Cover w/Lights (85)	1	$ 263.00
	011778	Replacement Steel Box Cover w/Lights (89)	1	$ 300.00
	011779	Replacement Steel Box Cover w/Lights (95)	1	$ 326.00
14	011806	Replacement Railgate Latch Lever	1	$ 71.20
15	011791	Replacement Steel Latch Plate-Right	1	$ 134.00
	011792	Replacement Steel Latch Plate-Left	1	$ 59.45
16	011793	Replacement Latch Lever Handle Grip	1	$ 4.15
17	000967	Replacement Raise Solenoid-3 Post	1	$ 58.45
18	006597	Replacement Cloth Chain Cover 46"	2	$ 13.00
	011807	Replacement Cloth Chain Cover 58"	2	$ 13.00
19	000987	Replacement Fixed Control	1	$ 129.00
	013559	Replacement Compact Fixed Control	1	$ 223.00
20	011780	Replacement Pump & Motor (3600psi) 3qt.** 2500# Railgate	1	$ 522.00
	011781	Replacement Pump & Motor (3800psi) 3qt.** 3000# Railgate	1	$ 522.00
21	000989	Replacement Vent Plug	1	$ 4.15
22	N/A	Replacement Pump (only) w/3qt. Tank (3600psi) 2500# Railgate (Discontinued - See Drawing Ref 20)	1	N/A
	N/A	Replacement Pump (only) w/3qt. Tank (3800psi) 3000# Railgate (Discontinued - See Drawing Ref 20)	1	N/A
23	004355	Replacement Plastic Tank (3qt.)**	1	$ 62.25
24	000958	Replacement 12 Volt Motor-Only**	1	$ 298.00
25	011803	Replacement 2 Ga. 2 Wire Electric Cable w/Lugs-33 ft.	1	$ 262.00
26	000992	Replacement Copper Lug	6	$ 4.15
27	011786	Replacement Cylinder (25-30) Railgate	1	$ 522.00
28	011790	Replacement Rail Cylinder Pin & Keeper	1	$ 30.50
30	000973	Replacement Check Valve	1	$ 29.95
31	012607	Replacement 9/16x9/16x90 Degree Steel Cylinder Elbow	1	$ 1.55
32	012966	Replacement 9/16" x 7/16" Flow Control	1	$ 51.40
33	011787	Cylinder Shaft w/Pulleys Assembly (Rail) Includes: Cylinder Repair Kit	1	$ 472.00
34	011788	2"x35" Replacement Cylinder Barrel (25-30 Rail) Includes: Cylinder Repair Kit	1	$ 403.00
35	011789	Replacement Cylinder Clamp (Rail)	1	$ 8.20
36	011805	Replacement Self-Close Handle Grip	1	$ 8.35
37	011775	Replacement 3.50 OD Pulley, Pin & Keeper	1	$ 73.85
38	011776	Replacement 4.72 OD Pulley, Pin & Keeper	1	$ 113.00
39	012609	Replacement 1/4"x20" Hydraulic Hose	1	$ 47.20

2500 AND 3000 RAILGATE SERIES PARTS PRICE LIST

Draw. Ref.	Part No.	Description	Qty Required	Sugg. Retail (Each)
40	012611	Replacement 90 Degree Elbow 9/16 x 7/16	1	$ 10.55
41	011795	Replacement Leaf Chain 265 Pitch - Passenger's Side (BH)	1	$ 608.00
	011797	Replacement Leaf Chain 291 Pitch - Passenger's Side (AB)	1	$ 657.00
42	011794	Replacement Leaf Chain Attachment Fitting	2	$ 107.00
43	011796	Replacement Leaf Chain 285 Pitch - Driver's Side (85) (BH)	1	$ 644.00
	011797	Replacement Leaf Chain 291 Pitch - Driver's Side (89) (BH)	1	$ 657.00
	011798	Replacement Leaf Chain 301 Pitch - Driver's Side (95) (BH)	1	$ 676.00
	013370	Replacement Leaf Chain 327 Pitch - Driver's Side (AB)	1	$ 745.00
44	011799	Leaf Chain Adjustment Screw, Clevis & Pin	2	$ 97.00
46	011800	Replacement Rail Chain Cover BH	2	$ 26.95
	014530	Replacement Rail Chain Cover AB	2	$ 20.50
47	011804	Replacement 200 Amp Manual Reset Circuit Breaker	1	$ 78.45
48	011801	Replacement Steel Upper Pulley Assembly Left	1	$ 189.00
49	011802	Replacement Steel Upper Pulley Assembly Right	1	$ 189.00
52	011771	Replacement Slider Wheel	1	$ 99.60
54	011822	Replacement Self-Close Arm w/Hardware (Steel)	1	$ 82.05
	011824	Replacement Self-Close Arm w/Hardware (Alum)	1	$ 93.45
55	008138	Replacement Self-Close 2" Roller Kit	2	$ 14.35
56	008067	Repair Self-Close Arm Bushing Kit-Steel Platform	2	$ 12.90
	008068	Repair Self-Close Arm Bushing Kit-Aluminum Platform	2	$ 19.55
59	000922	Replacement 0.142"x1.125"x5.5" Extension Spring (Rail)	2	$ 6.25
65	008171	(85) Replacement Safety Trip Bar-77-1/2"	1	$ 48.60
	008172	(89) Replacement Safety Trip Bar-81-1/2"	1	$ 48.60
	008173	(95) Replacement Safety Trip Bar-87-1/2"	1	$ 48.60
66	009645	Release Solenoid External Assembly w/Connector	1	$ 96.75
67	011785	2" Cylinder Repair Kit (25-30 Rail)	1	$ 262.00
68	000920	Replacement Steel Platform Triangle Deadman	2	$ 4.15
	000921	Replacement Aluminum Platform Triangle Deadman	2	$ 6.25
70	000966	Padlock w/Keys	1	$ 15.95
75	013570	Replacement Left Cartstop Assembly (85) w/Spring (in taper)	1	$ 167.00
	013571	Replacement Left Cartstop Assembly (89) w/Spring (in taper)	1	$ 169.00
	013572	Replacement Left Cartstop Assembly (95) w/Spring (in taper)	1	$ 174.00
76	013575	Replacement Right Cartstop Assembly (85) w/Spring (in taper)	1	$ 167.00
	013576	Replacement Right Cartstop Assembly (89) w/Spring (in taper)	1	$ 169.00
	013577	Replacement Right Cartstop Assembly (95) w/Spring (in taper)	1	$ 174.00
92	011809	1/2"SQ. Torsion Spring Kit (85Rail)	1	$ 280.00
	011810	1/2"SQ. Torsion Spring Kit (89Rail)	1	$ 280.00
	011811	1/2"SQ. Torsion Spring Kit (95Rail)	1	$ 280.00
	011812	5/8"SQ. Torsion Spring Kit (85Rail)	1	$ 280.00
	011813	5/8"SQ. Torsion Spring Kit (89Rail)	1	$ 280.00
	011814	5/8"SQ. Torsion Spring Kit (95Rail)	1	$ 280.00
94	013566	Repair Cartstop Torsion Spring Kit (in taper)	1	$ 29.40
	014542	Removable Cart Stop Torsion Spring Kit	2	$ 29.40
95	014544	Replacement Cartstop Latch Kit	2	$ 19.90
99	014543	Removable Cart Stop Replacement Hinge Kit	2	$ 30.95

**Please provide the liftgate Model and Serial numbers when ordering repair parts.
Note: The above prices are for standard equipment only. Call the factory for pricing of optional equipment or special features.

2500 AND 3000 TUCKUNDER SERIES
PARTS DRAWING

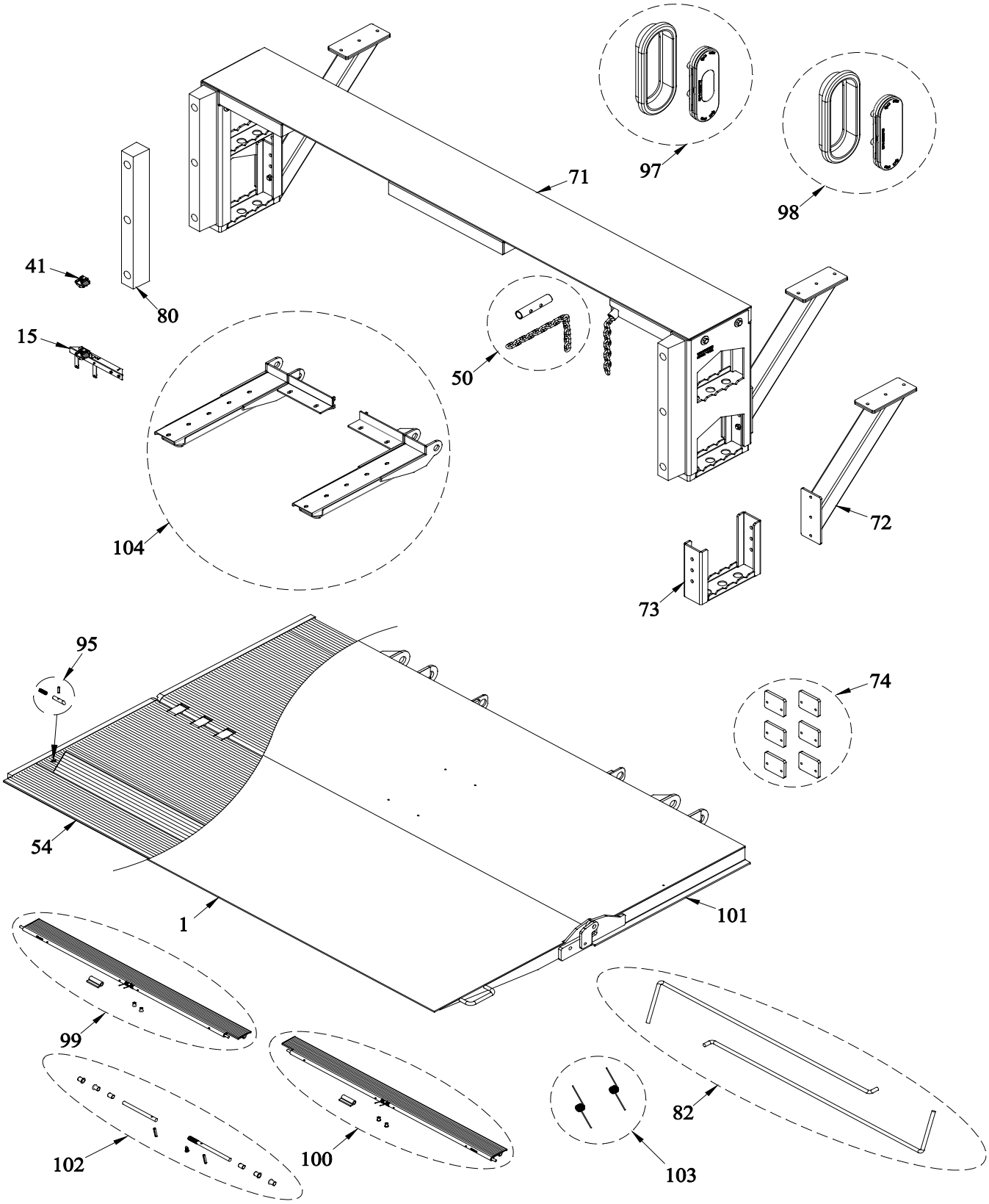

2500 AND 3000 TUCKUNDER SERIES
PARTS DRAWING

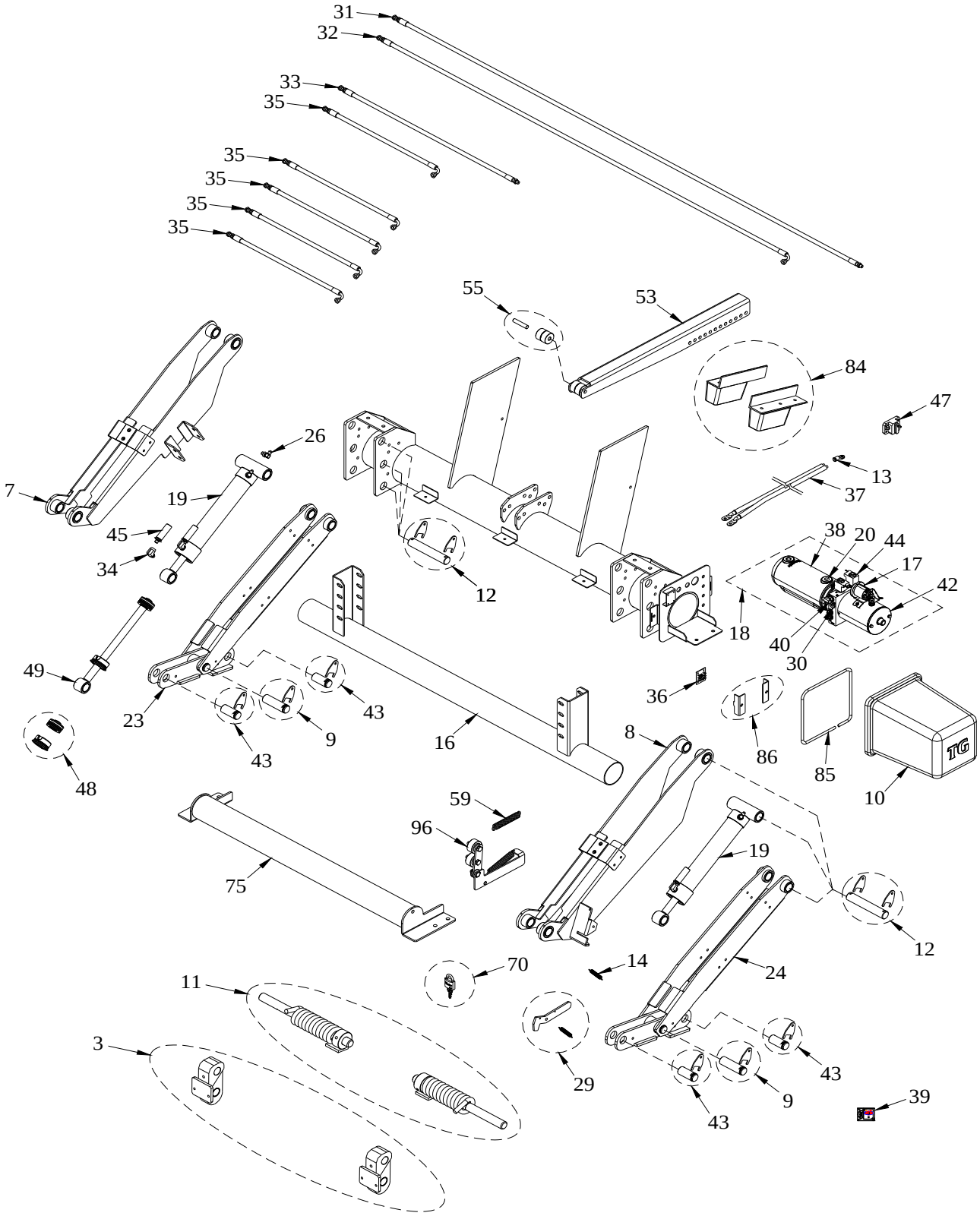

TUCKUNDER SERIES PARTS PRICE LIST

Draw. Ref.	Part No.	Description	Qty Required	Sugg. Retail (Each)
1	013930	Replacement 50" x 80" Aluminum Platform with Cart Stop	1	$ 3,556.00
	013931	Replacement 60" x 80" Aluminum Platform with Cart Stop	1	$ 4,018.00
	013932	Replacement 50" x 80" Aluminum Platform	1	$ 3,055.00
	013933	Replacement 60" x 80" Aluminum Platform	1	$ 3,517.00
	012910	Replacement 50" x 80" Steel Platform	1	$ 1,880.00
	012911	Replacement 60" x 80" Steel Platform	1	$ 2,048.00
3	012912	Platform Link Kit	1	$ 370.00
7	012913	Replacement Upper Arm w/Pins & Keepers (Left)	1	$ 484.00
8	012914	Replacement Upper Arm w/Pins & Keepers (Right)	1	$ 484.00
9	012915	Replacement 1-1/4" Lift Arm Pivot Pin w/ Keeper	2	$ 48.60
10	012916	Replacement Power Unit Cover	1	$ 106.00
11	012917	Replacement Platform Coil Springs	1	$ 223.00
12	012918	Replacement 1-1/4" Frame Pin w/ Keepers	6	$ 66.90
13	012919	Replacement 2 Ga. Copper Lug	6	$ 4.15
14	000931	Replacement Tuckunder Latch Spring	1	$ 6.25
15	013708	License Plate Bracket with Light	1	$ 63.00
16	012920	Replacement Upper Arm Tube Assembly	1	$ 315.00
17	013558	Replacement Raise Solenoid-4 Post	1	$ 58.45
18	012921	Replacement Pump & Motor 3qt.** 2500/3000# Tuckunder	1	$ 858.00
	014605	Replacement 24V Pump & Motor 3qt.** 2500/3000# Tuckunder	1	$ 980.00
19	012923	Replacement Lift Cylinder	2	$ 567.00
20	000989	Replacement Vent Plug	1	$ 4.15
23	012924	Replacement Lift Arm w/Pins & Keepers (Left)	1	$ 377.00
24	012925	Replacement Lift Arm w/Pins & Keepers (Right)	1	$ 377.00
26	011283	Replacement 04MORB x 04MJIC x 90° Cyl. Elbow	2	$ 6.50
29	012926	Replacement Tuckunder Latch Handle	1	$ 37.05
30	011950	Replacement Poppet Check Valve	1	$ 28.55
31	012927	Replacement Hydraulic Hose-Lift Cylinder Long (Left)	1	$ 77.75
32	012928	Replacement Hydraulic Hose-Lift Cylinder Short (Left)	1	$ 75.25
33	012929	Replacement Hydraulic Hose-Lift Cylinder Long (Right)	1	$ 51.85
34	013073	Replacement 04MORB x 04FORB x 90° Cyl. Elbow	2	$ 10.55
35	012931	Replacement Hydraulic Hose-Pump/Lift Cylinder Short (Right)	5	$ 44.95
36	012932	Replacement Tuckunder Circuit Board	1	$ 202.00
37	011803	Replacement 2 Ga. 2 Wire Electric Cable w/Lugs-33 ft.	1	$ 262.00
38	012933	Replacement Plastic Tank (3qt.)**	1	$ 62.35
39	013559	Replacement Compact Fixed Control	1	$ 223.00
40	000974	Replacement Tee Fitting (Pump & Motor)	2	$ 23.50
41	014042	Replacement License Plate Light	1	$ 31.00
42	000958	Replacement 12 Volt Motor-Only**	1	$ 298.00
43	012934	Replacement 1-1/4" Lift Arm Pin w/Keeper	4	$ 40.10
44	011947	Replacement 2Way/2Pos Solenoid Assembly w/Connector	1	$ 96.75
	011948	Replacement 4Way/2Pos Solenoid Assembly w/Connector	1	$ 134.00

TUCKUNDER SERIES PARTS PRICE LIST

Draw. Ref.	Part No.	Description	Qty Required	Sugg. Retail (Each)
45	012749	Replacement Flow Control (7/16 x 7/16 x 0.078)	2	$ 51.40
47	011804	Replacement 200 Amp Manual Reset Circuit Breaker	1	$ 78.45
48	012935	Lift Cylinder Seal Repair Kit	2	$ 120.00
49	012936	Lift Cylinder Shaft Repair Kit	2	$ 615.00
50	012937	Replacement Latch Chain	1	$ 25.05
53	012938	Replacement Roller Arm	1	$ 116.50
54	012939	Replacement Aluminum 25" Folding Extension	1	$ 1,457.00
	012940	Replacement Aluminum 30" Folding Extension	1	$ 1,723.00
	012922	Replacement Aluminum 25" Folding Extension with Cart Stop	1	$ 1,959.00
	012947	Replacement Aluminum 30" Folding Extension with Cart Stop	1	$ 2,225.00
	014337	Replacement Treadplate 25" Folding Extension	1	$ 689.00
	014338	Replacement Treadplate 30" Folding Extension	1	$ 846.00
55	012941	Replacement Roller Arm Wheel Kit	1	$ 26.80
59	000922	Replacement Passive Latch Spring	1	$ 6.25
70	000966	Replacement Padlock w/Keys	1	$ 9.65
71	012942	Replacement 94" Standard Bed Extension	1	$ 907.00
	012943	Replacement 94" Heavy Bed Extension	1	$ 1,077.00
	012944	Replacement 100" Standard Bed Extension	1	$ 1,032.00
	012945	Replacement 100" Heavy Bed Extension	1	$ 1,201.00
72	012946	Replacement Bed Extension Brace	2	$ 55.80
73	012948	Replacement Bed Extension Step	2	$ 49.50
74	012950	Replacement Platform Shim Kit	1	$ 17.10
75	012930	Replacement Lower Arm Link	1	$ 167.00
80	012952	Replacement Dock Bumper	2	$ 75.20
82	012953	Replacement Flipper Torsion Spring Kit (50" Steel)	1	$ 33.65
	014194	Replacement 60" EA Flipper Torsion Spring Kit(TKT)	1	$ 64.40
	012954	Replacement Flipper Torsion Spring Kit (60" Steel)	1	$ 95.85
84	012955	Replacement Snubber Kit	1	$ 89.05
85	014348	Replacement Power Unit Cover Seal	1	$ 10.90
86	014349	Replacement Power Unit Cover Latch	1	$ 8.40
95	011285	Replacement Cartstop Spring Assembly (in taper)	2	$ 19.90
96	014041	Replacement Passive Latch	1	$ 52.10
97	014257	Replacement STT W/Backup LED Light W/Grommet (12VDC)	2	$ 64.90
98	014258	Replacement STT Red Light W/Grommet (12VDC)	2	$ 64.90
99	014327	Replacement Left Cart Stop	1	$ 174.00
100	014328	Replacement Right Cart Stop	1	$ 174.00
101	014335	Replacement 30" EA Main Platform	1	$ 2,405.00
	014336	Replacement 25" EA Main Platform	1	$ 2,176.00
	014339	Replacement 25" Treadplate Main Platform	1	$ 1,068.00
	014340	Replacement 30" Treadplate Main Platform	1	$ 1,163.00
102	014543	Removable Cart Stop Replacement Hinge Kit	2	$ 30.95
103	014542	Removable Cart Stop Torsion Spring Kit	2	$ 29.40
104	014678	Replacement 50" EA Platform Support Kit(TKT)	1	$ 347.00
	014679	Replacement 60" EA Platform Support Kit(TKT)	1	$ 347.00

**Please provide the liftgate Model and Serial numbers when ordering repair parts.
Note: The above prices are for standard equipment only. Call the factory for pricing of optional equipment or special features.

1600 & 2000 ALUMINUM ROLLER RAILGATE SERIES
ALUMINUM CARTSTOP REPAIR PARTS DRAWING

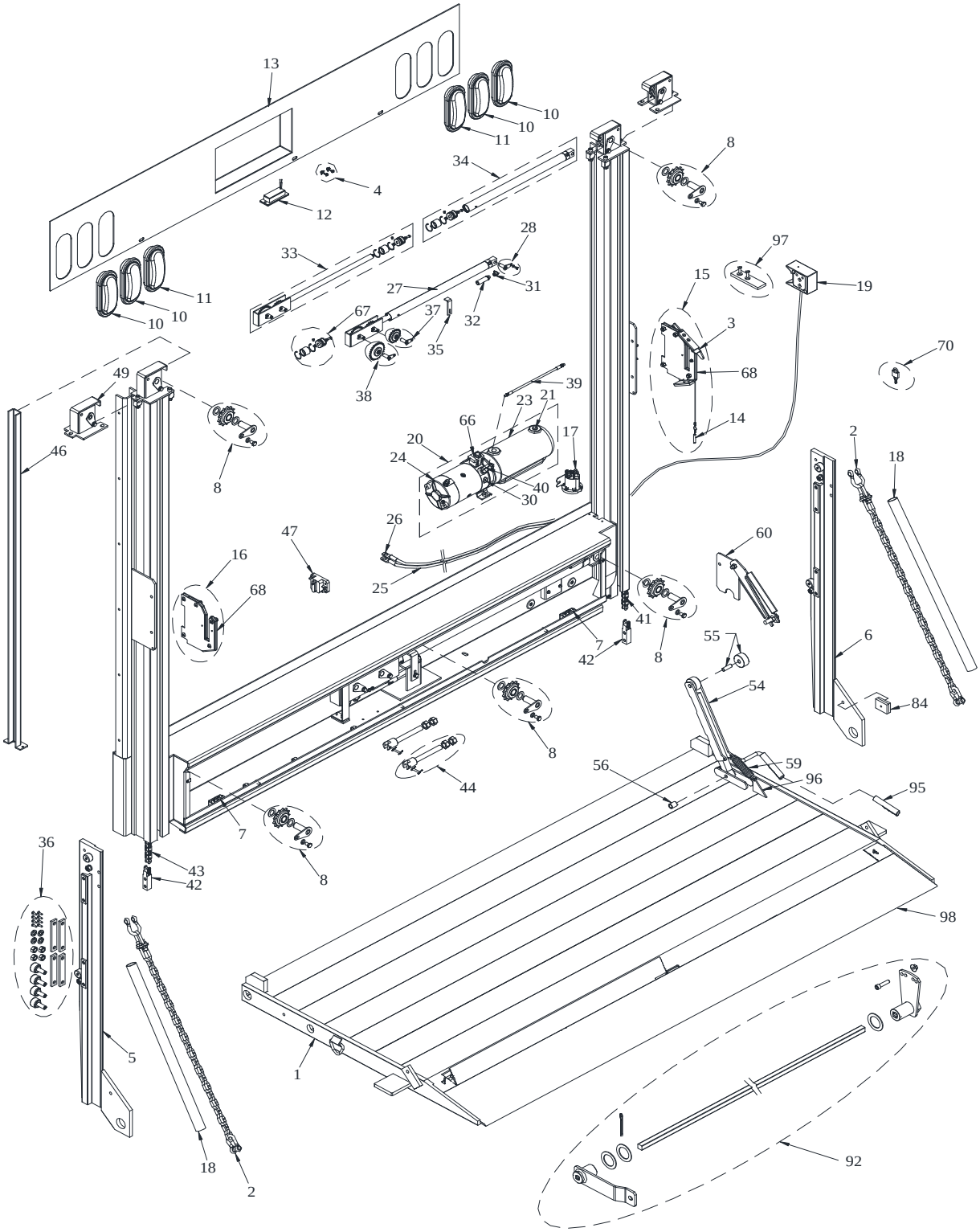

1600 & 2000 ALUMINUM ROLLER RAILGATE SERIES
ALUMINUM CARTSTOP REPAIR PARTS DRAWING

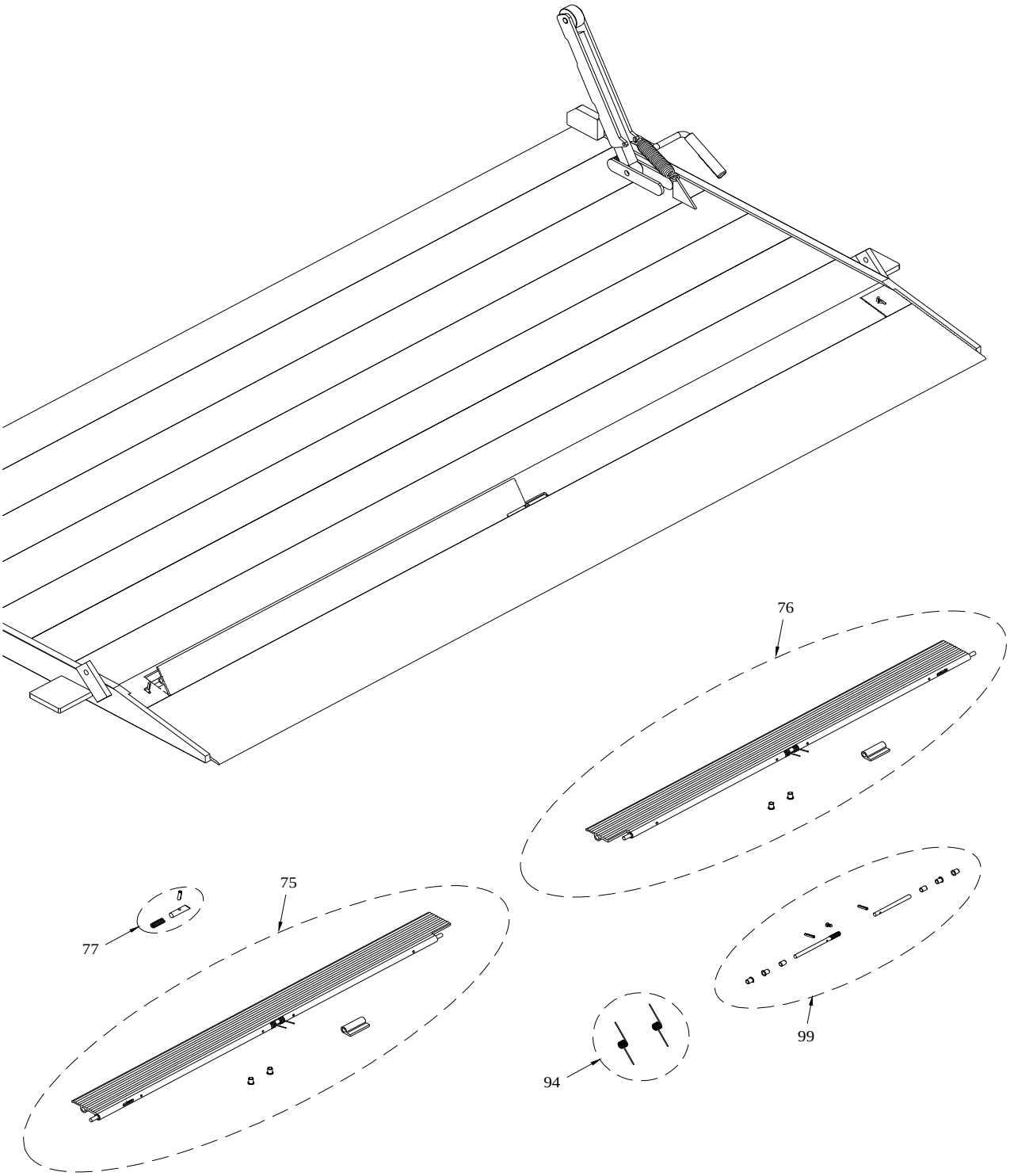

1/11/2017

1600 AND 2000 TEXTILE RAILGATE SERIES PARTS PRICE LIST

Draw. Ref.	Part No.	Description	Qty Required	Sugg. Retail (Each)
1	013822	TA (85)35+12 Replacement EA Platform w/Bolt On Taper	1	$ 2,839.00
	013091	TA (89)35+12 Replacement EA Platform	1	$ 2,764.00
	013092	TA (89)35+12 Replacement EA Platform w/Cart Stop	1	$ 3,265.00
	013093	TA (89)35+12 Replacement EA Platform w/Bolt On Taper	1	$ 2,883.00
	013094	TA (89)35+12 Replacement EA Platform w/Cart Stop and Bolt On Taper	1	$ 3,384.00
	013095	SC (89)35+12 Replacement EA Platform	1	$ 2,764.00
	013096	SC (89)35+12 Replacement EA Platform w/Cart Stop	1	$ 3,265.00
	013097	SC (89)35+12 Replacement EA Platform w/Bolt On Taper	1	$ 2,883.00
	013098	SC (89)35+12 Replacement EA Platform w/Cart Stop and Bolt On Taper	1	$ 3,384.00
	013099	TA (89)55+12 Replacement EA Platform	1	$ 3,184.00
	013100	TA (89)55+12 Replacement EA Platform w/Cart Stop	1	$ 3,685.00
	013101	TA (89)55+12 Replacement EA Platform w/Bolt On Taper	1	$ 3,303.00
	013102	TA (89)55+12 Replacement EA Platform w/Cart Stop and Bolt On Taper	1	$ 3,804.00
2	013108	Rail(AB) Replacement Platform Chain (37+1 Links) (TX)	2	$ 80.30
3	012627	Replacement Latch Flipper	1	$ 50.10
	013823	Replacement Self Close Latch Flipper	1	$ 13.30
4	001111	License Plate Mount Kit	1	$ 4.15
5	013109	47" Replacement TA Slider w/Rollers-Left(TX)	1	$ 549.00
	013111	47" Replacement Self Close Slider w/Rollers-Left(TX)	1	$ 549.00
6	013110	47" Replacement TA Slider w/Rollers-Right(TX)	1	$ 549.00
	013553	47" Replacement Self Close Slider w/Rollers-Right(TX)	1	$ 549.00
7	000930	Replacement Rail Safety Switch	2	$ 41.95
8	004191	13 Tooth Replacement Sprocket, Pin & Keeper (All Aluminum)	5	$ 61.10
10	000904	Replacement Red LED Light w/Grommet	4	$ 54.55
11	000889	Replacement Clear LED Light w/Grommet	2	$ 54.55
12	013554	Replacement LED License Plate Light	1	$ 26.80
13	013824	Replacement Self Close Box Cover (85) w/Alarm	1	$ 647.00
	013103	Replacement Box Cover (89)TX w/Alarm & Lights(TA) (SPEC GATE ONLY)	1	$ 666.00
	013555	Replacement Box Cover (89)TX w/Lights(TA) (SPEC GATE ONLY)	1	$ 589.00
	013556	Replacement Self Close Box Cover (89)TX w/Alarm & Lights	1	$ 666.00
	013557	Replacement Self Close Box Cover (89)TX w/Lights	1	$ 589.00
14	012628	Replacement Latch Pin and Lanyard	1	$ 11.75
15	012624	Replacement PS Latch	1	$ 132.00
	013825	Replacement PS Self Close Latch (TX)	1	$ 134.00
16	012625	Replacement DS Latch	1	$ 106.00
17	013558	Replacement Raise Solenoid-4 Post	1	$ 58.45
18	006597	Replacement Cloth Chain Cover 46"	2	$ 13.00
19	013559	Replacement Fixed Compact Control	1	$ 223.00
20	013267	Replacement Auxiliary Hand Pump & Motor 2600psi	1	$ 627.00
	013268	M319 Replacement Pump & Motor (2100psi) 3qt. 3-Post	1	$ 522.00
	013269	M319 Replacement Pump & Motor (2100psi) 3qt. 4-Post	1	$ 522.00
21	000989	Replacement Vent Plug	1	$ 4.15
23	004355	Replacement Monarch Plastic Tank (3qt.)**	1	$ 62.25
24	000958	Replacement 12 Volt Motor-Only (Monarch)**	1	$ 298.00
25	011803	Replacement 2 Ga. 2 Wire Elec Cable w/Lugs-33 ft.	1	$ 262.00
	013560	Replacement 2 Ga. Single Wire Cables w/Lugs-35 ft. Red/30 ft. Black	1	$ 262.00
26	000992	Replacement Copper Lug	6	$ 4.15
27	009760	Railgate Replacement Cylinder (79-95)	1	$ 419.00
28	008179	Replacement Rail Cylinder Pin & Keeper (Alum)	1	$ 35.70
30	000973	Replacement Monarch Lee Check Valve	1	$ 29.95

1600 AND 2000 TEXTILE RAILGATE SERIES PARTS PRICE LIST

Draw. Ref.	Part No.	Description	Qty Required	Sugg. Retail (Each)
31	012607	Replacement 90 Degree Elbow (Male 9/16 ORB x Female 9/16 ORB)	1	$ 10.55
32	012966	Replacement Flow Control Complete (9/16" M x 7/16" F x 0.078") w/ Adapters for (3/8" M x 1/4" F x 0.078")	1	$ 51.40
33	003221	Cylinder Shaft w/Sprockets Assembly (Rail) Includes: Cylinder Repair Kit	1	$ 384.00
34	003257	2"x35" Replacement Cylinder Barrel (Rail) Includes: Cylinder Repair Kit	1	$ 300.00
35	006835	Replacement Cylinder Clamp (All Aluminum Rail)	1	$ 9.40
36	013561	Replacement Bearing Pad Set W/ Rollers (TX)	2	$ 214.00
37	004188	19-Tooth Repair Sprocket with 3/4" x 2" Pin & Keeper	1	$ 53.15
38	004189	25-Tooth Repair Sprocket with 3/4" x 2" Pin & Keeper	1	$ 77.70
39	012609	Replacement 1/4"x20" Hydraulic Hose w/ Adapters (79,85,89,95)	1	$ 47.20
40	012611	Replacement 90 Degree Elbow (Male 9/16 O-ring Boss x Male 7/16 JIC)	1	$ 10.55
41	013562	295 Pitch Replacement Roller Chain Above Bed Pass. Side(TX)	1	$ 241.00
42	008030	Replacement Roller Chain Attachment Fitting	2	$ 26.05
43	008044	335 Pitch Replacement Roller Chian Above Bed Driver's Side(95 & 89TX)	1	$ 269.00
	013826	329 Pitch Replacement Roller Chain (85TX)	1	$ 267.00
44	007947	Roller Chain Adjustment Screw, Clevis & Pin	2	$ 31.90
46	013563	Replacement Alum. Roller Chain Cover(TX)	2	$ 27.25
47	000998	Replacement 150 Amp Manual Reset Circuit Breaker	1	$ 61.10
48	013564	Replacement Alum AB Sprocket Assembly-R(TX)	1	$ 61.10
49	013638	Replacement Alum AB Sprocket Assembly-L(TX)	1	$ 61.10
54	013639	Replacement Alum Platform Self Close Arm Kit (TX)	1	$ 88.35
55	008138	Replacement Self-Close 2" Roller Kit	1	$ 14.35
56	008068	Repair Self Close Arm Bushing Kit-Aluminum Platform	1	$ 19.55
59	000922	Replacement 0.142"x1.125"x5.5" Extension Spring (Rail)	1	$ 9.10
60	013357	Platform Hold Down Kit	1	$ 262.00
65	013640	(TX)Replacement Self-Close Safety Trip Bar-81-1/4"	1	$ 81.60
	013641	(TX)Replacement Safety Trip Bar-83-1/4"(TA) (SPEC GATE ONLY)	1	$ 81.60
	013827	Replacement Safety Trip Bar-79-1/4" (85)	1	$ 81.60
66	009645	Release Solenoid External Assembly w/Connector	1	$ 96.75
67	001110	2" Cylinder Repair Kit (Rail)	1	$ 158.00
68	012626	Replacement UHMW Poly. Rail Plate Wear Latch	2	$ 27.10
70	000966	Replacement Padlock w/Keys	1	$ 9.65
75	013571	Replacement Left Cart Stop (In Taper) 89	1	$ 169.00
	013570	Replacement Left Cart Stop (In Taper) 85	1	$ 167.00
76	013576	Replacement Right Cart Stop (In Taper) 89	1	$ 169.00
	013575	Replacement Right Cart Stop (In Taper) 85	1	$ 167.00
77	014544	Replacement Rail Cart Stop Latch Kit	2	$ 19.90
84	013642	Replacement Platform Stop Block Kit (TX)	1	$ 20.70
92	013645	1/2"SQ. Torsion Spring Kit Self Close(TX)	1	$ 273.00
	013646	5/8"SQ. Torsion Spring Kit (TX)	1	$ 273.00
	013647	(89) Dual Torsion Spring Kit (TX)	1	$ 273.00
	013838	5/8"SQ. Torsion Spring Kit (85)	1	$ 273.00
94	013566	Repair Cart Stop Rail Torsion Spring Kit	1	$ 41.70
	014542	Removable Cart Stop Torsion Spring Kit	2	$ 27.35
95	011805	Replacement Self-Close Handle Grip(4.50")	1	$ 6.45
96	000921	Replacement Alum Platform Triangle Deadman	1	$ 6.25
97	013599	Replacement Latch Flipper Wear Plate	1	$ 18.55
98	013643	(89) 12" Rep EA Bolt On Taper w/CS (TX)	1	$ 946.00
	013644	(89) 12" Rep EA Bolt On Taper (TX)	1	$ 445.00
	013839	(85) 12" Rep EA Bolt On Taper W/CS (TX)	1	$ 946.00
99	014543	Removable Cart Stop Replacement Hinge Kit	2	$ 30.95

**Please provide the liftgate Model and Serial numbers when ordering repair parts.
Note: The above prices are for standard equipment only. Call the factory for pricing of optional equipment or special features.

Tommy Gate Distributor Liftgate Parts Price List
Woodbine Manufacturing Company
Effective June 1, 2016
1.800.LIFTGATE

Part #	Description	Requi	Retail Per
000889	Replacement Clear LED Light w/Grommet	2	$ 54.55
000904	Replacement Red LED Light w/Grommet	4	$ 54.55
000913	Replacement 1/2"Dia.x1" Cotterless Hitch Pin	1	$ 7.15
000914	Rail Pin & Padlock w/Keys	1	$ 15.95
000916	Replacement 1/4"x7/16"x90 Degree Steel Cylinder Elbow	1	$ 10.55
000917	Replacement 3/8"x9/16"x90 degree Cylinder Elbow	1	$ 10.55
000918	Replacement Bottle Rack Chain - 3/16" Zinc x 75 Link	2	$ 30.60
000919	Replacement Gas Bottle Rack Lynch Pin	2	$ 4.55
000920	Replacement Steel Platform Triangle Deadman	2	$ 4.15
000921	Replacement Aluminum Platform Triangle Deadman	2	$ 6.25
000922	Replacement 0.142"x1.125"x5.5" Extension Spring (Rail)	2	$ 9.10
000925	Replacement Steel Latch Plate-Left	1	$ 71.20
000926	Replacement Clear Light w/Grommet (after serial # M16-2387R and M20-5786)	2	$ 24.50
000927	Replacement Clear Light w/Grommet (before serial # M16-23388R and M20-5787)	1	$ 24.50
000928	Replacement Red Light w/Grommet (after serial # M16-2387R and M20-5786)	4	$ 24.50
000929	Replacement Red Light w/Grommet (before serial # M16-23388R and M20-5787)	4	$ 24.50
000930	Replacement Rail Safety Switch	2	$ 41.95
000931	Replacement Rail Latch Spring	1	$ 6.25
000932	Replacement (91) Grip Tape Kit For Platform	1	$ 71.45
000934	Replacement 3/8"x3/8"x90 Degree Cylinder Elbow	1	$ 6.25
000944	Replacement 90 Degree Elbow (Male 9/16 O-ring Boss x Female 1/4 NPTF)	1	$ 15.40
000945	Replacement 90 Degree Elbow (Male 3/8 NPTF x Female 1/4 NPTF)	1	$ 6.25
000949	Replacement Original Series License Plate Light	2	$ 6.25
000951	Replacement 3/4"x1-1/2" Arm Pin (after serial # M-83393)	10	$ 6.25
000952	Replacement 7/8" Arm Pin (after serial # M-82340-1000#&1300#)	10	$ 6.25
000954	Replacement Latch Spring	1	$ 4.15
000955	Replacement Latch Knob w/Stud	2	$ 6.25
000956	Replacement (64) Grip Tape Kit For Platform	1	$ 71.45
000957	Replacement 1.5qt. Monarch Plastic Tank (G2)	1	$ 62.25
000958	Replacement 12 Volt Motor-Only (Monarch)	1	$ 298.00
000959	Replacement Flow Control (G2)	2	$ 43.00
000960	G2 54-F11+4 Replacement Treadplate Flipper	1	$ 255.00
000961	G2 54-F11+7 Replacement Treadplate Flipper	1	$ 316.00
000962	G2 60-F11+4 Replacement Treadplate Flipper	1	$ 260.00
000963	G2 60-F11+7 Replacement Treadplate Flipper	1	$ 340.00
000966	Replacement Padlock w/Keys	1	$ 9.65
000967	Replacement Raise Solenoid-3 Post	1	$ 58.45
000968	Replacement 1340 G2 Pump & Motor Unit (2050psi)	1	$ 522.00
000969	Replacement 1540 G2 Pump & Motor Unit (2350psi)	1	$ 522.00
000970	Replacement 1640 G2 Pump & Motor Unit (2500psi)	1	$ 522.00
000971	Replacement G2 Cylinder	2	$ 350.00
000972	Replacement Split Plastic Grommet Kit	2	$ 4.15
000973	Replacement Monarch Lee Check Valve (after serial # M-335705 1000# & 1300#)	1	$ 29.95
000974	Replacement G2 T-Fitting (Pump & Motor)	1	$ 23.50
000975	Replacement 1/4"X21" Hydraulic Hose-Left (G2)	1	$ 29.70
000976	Replacement 1/4"x52" Hydraulic Hose-Right (54 & 60 G2)	1	$ 43.75
000977	Replacement 1/4"x56.63" Hydraulic Hose-Right (64 G2)	1	$ 48.85
000978	Replacement 1/4"x1/4"x90 Degree Steel Cylinder Elbow	2	$ 6.25

000979	Replacement Vent Plug - Cylinder (Rail & G2)	2	$	4.15
000983	Replacement Toggle Switch Only	2	$	20.50
000987	Replacement Fixed Control	1	$	129.00
000988	Replacement Lower Pivot Bushing	1	$	8.20
000989	Replacement Vent Plug	1	$	4.15
000992	Replacement Copper Lug	6	$	4.15
000993	Replacement 650 Pendant Control	1	$	146.00
000994	Replacement 90 degree Elbow w/ Adapters (650)	1	$	17.10
000995	Replacement Solenoid - 4 Post (650)	1	$	58.45
000997	Replacement 650 Flow Control w/ Adapters	1	$	51.40
000998	Replacement 150 Amp Manual Reset Circuit Breaker	1	$	61.10
001010	G2 Replacement Drop Away Pin Assembly	1	$	6.25
001070	Driver's Side Latch Kit (swing away)	1	$	34.65
001071	Passenger's Side Latch Kit (fixed)	1	$	20.50
001083	Replacement Pin & Chain Only (LND)	2	$	5.20
001087	LD Latch Kit	2	$	15.75
001107	Driver's Side Latch Kit EA (swing away)	1	$	36.60
001110	2" Cylinder Repair Kit (after serial # M16-16166R and M20-3192)	1	$	158.00
001111	License Plate Mount Kit	1	$	4.15
001125	1040-1340 Replacement Lift Arm w/Pins & Zerks	4	$	50.05
001126	1046-1650 Replacement Lift Arm w/Pins & Zerks	4	$	48.80
001138	G2 Cylinder Repair Kit (after serial # 470166M)	2	$	92.35
001139	1-1/2" Cylinder Repair Kit (54-1040 & 60-1040 before serial # 459225M*, all 1034	1	$	34.65
001140	1-3/4" Cylinder Repair Kit (54-1040 & 60-1040 after serial # 462473M*, all 1046, a	1	$	39.95
001141	2" Cylinder Repair Kit (1346-1650) Includes: Piston, Guide Bushing & O-rings	1	$	68.65
001211	Replacement G2 Cylinder Shaft Complete (40) (after serial # 470166M)	2	$	259.00
001220	27" TP Hinge Tube Spring Holders (no spring)	1	$	50.25
001224	(91) 42" Extruded Aluminum Replacement Platform	1	$	1,931.00
001227	72P w/F11 Treadplate Replacement Platform	1	$	552.00
001261	(85) SC 37+6 Replacement Steel Platform	1	$	834.00
001262	(89) SC 37+6 Replacement Steel Platform	1	$	848.00
001263	(85) SC 42+6 Replacement Steel Platform	1	$	1,051.00
001264	(89) SC 42+6 Replacement Steel Platform	1	$	1,064.00
001267	(85) SC 60+12 Replacement Aluminum Platform	1	$	3,072.00
001268	(89) SC 60+12 Replacement Aluminum Platform	1	$	3,109.00
001286	(85) TA 30+12 Replacement SGBR w/Rack	1	$	1,308.00
001287	(89) TA 30+12 Replacement SGBR w/Rack	1	$	1,327.00
001383	Replacement Cylinder Tube (650)	1	$	186.00
001385	2"x37.25" Replacement Hinge Tube w/Bushings (650)	1	$	230.00
001396	Replacement Cylinder Shaft w/End Lugs Includes: Guide Bushing & O-ring Kit	1	$	235.00
001400	650 Replacement Platform	1	$	434.00
001403	650 Self Close Tube Kit	1	$	61.65
001437	650 Pin Kit (Lower Cylinder)	1	$	21.20
001438	650 Pin Kit (Upper Cylinder)	1	$	21.20
001495	650 Motor (only)	1	$	357.00
001627	Mini w/F9 EA Replacement Platform	1	$	963.00
001628	Dakota w/F9 EA Replacement Platform	1	$	1,009.00
001629	60 Toyota w/F9 EA Replacement Platform	1	$	1,072.00
001630	48 w/F11 EA Replacement Platform	1	$	798.00
001631	54 38" EA Replacement Platform	1	$	862.00
001632	60 38" EA Replacement Platform	1	$	900.00
001633	64/65 38" EA Replacement Platform	1	$	941.00
001638	64SB EA Replacement Platform	1	$	1,156.00
001639	72 EA Replacement Platform	1	$	1,327.00

001640	80 EA Replacement Platform	1	$	1,478.00
001641	86 EA Replacement Platform	1	$	1,533.00
001642	91 EA Replacement Platform	1	$	1,581.00
001643	Mini Treadplate Replacement Platform	1	$	449.00
001644	Dakota & Isuzu Treadplate Replacement Platform	1	$	472.00
001645	60 Toyota Treadplate Replacement Platform	1	$	503.00
001646	48-1036 Treadplate Replacement Platform	1	$	238.00
001647	48-1036 w/F11 Treadplate Replacement Platform	1	$	441.00
001648	64 Treadplate Replacement Platform	1	$	290.00
001649	64 w/F11 Treadplate Replacement Platform	1	$	494.00
001650	54-1040 & 54-1340 Treadplate Replacement Platform	1	$	252.00
001651	54-1040 & 54-1340 w/F11 Treadplate Replacement Platform	1	$	458.00
001654	60-1040 & 60-1340 Treadplate Replacement Platform	1	$	276.00
001655	60-1040 & 60-1340 Treadplate w/F11 Replacement Platform	1	$	480.00
001658	64-1340 Treadplate Replacement Platform	1	$	308.00
001659	64-1340 w/F11 Treadplate Replacement Platform	1	$	514.00
001660	(64SB) 36" Treadplate Replacement Platform	1	$	615.00
001661	(72) 36" Treadplate Replacement Platform	1	$	675.00
001662	(80) 36" Treadplate Replacement Platform	1	$	731.00
001663	(86) 36" Treadplate Replacement Platform	1	$	753.00
001664	(91) 36" Treadplate Replacement Platform	1	$	766.00
001678	48-F11 Treadplate Flipper Boxed	1	$	255.00
001679	54-F11 Treadplate Flipper Boxed	1	$	255.00
001680	60-F11 Treadplate Flipper Boxed	1	$	255.00
001681	64-F11 Treadplate Flipper Boxed	1	$	255.00
001700	(95) SC 37+6 Replacement Steel Platform	1	$	861.00
001701	(95) SC 42+6 Replacement Steel Platform	1	$	1,077.00
001703	(95) SC 60+12 Replacement Aluminum Platform	1	$	3,221.00
001718	(73) SC 37+6 Replacement Steel Platform	1	$	815.00
001719	(79) SC 37+6 Replacement Steel Platform	1	$	823.00
001720	(85) SC 55+12 Replacement Aluminum Platform	1	$	2,918.00
001723	(73) SC 42+6 Replacement Steel Platform	1	$	1,030.00
001724	(79) SC 42+6 Replacement Steel Platform	1	$	1,040.00
001727	(73) SC 60+12 Replacement Aluminum Platform	1	$	2,929.00
001728	(79) SC 60+12 Replacement Aluminum Platform	1	$	2,997.00
001740	(73) TA 30+12 Replacement SGBR w/Rack	1	$	1,289.00
001741	(79) TA 30+12 Replacement SGBR w/Rack	1	$	1,299.00
001742	(95) TA 30+12 Replacement SGBR w/Rack	1	$	1,348.00
001774	72P-F11 Treadplate Flipper Boxed	1	$	255.00
001782	(64SB) 36" Treadplate Replacement Platform	1	$	615.00
001783	(64SB) 42" Treadplate Replacement Platform	1	$	944.00
001784	(72) 36" Treadplate Replacement Platform	1	$	675.00
001785	(72) 42" Treadplate Replacement Platform	1	$	1,004.00
001786	(80) 36" Treadplate Replacement Platform	1	$	731.00
001787	(80) 42" Treadplate Replacement Platform	1	$	1,060.00
001788	(86) 36" Treadplate Replacement Platform	1	$	753.00
001789	(86) 42" Treadplate Replacement Platform	1	$	1,082.00
001790	(91) 36" Treadplate Replacement Platform	1	$	766.00
001791	(91) 42" Treadplate Replacement Platform	1	$	1,095.00
001792	Mini-F7 Treadplate Flipper Boxed	1	$	255.00
001793	Dakota & Isuzu-F7 Treadplate Flipper Boxed	1	$	255.00
001794	T-100-F7 Treadplate Flipper Boxed	1	$	255.00
001796	Mini-F9 Replacement EA Flipper	1	$	361.00
001797	Dakota & Isuzu F9 Replacement EA Flipper	1	$	361.00

001798	60 Toyota F9 Replacement EA Flipper	1	$	361.00
001880	48-F11 Replacement EA Flipper	1	$	361.00
001881	54-F11 Replacement EA Flipper	1	$	388.00
001882	60-F11 Replacement EA Flipper	1	$	402.00
001883	64/65-F11 Replacement EA Flipper	1	$	447.00
001977	Railgate Replacement Latch Lever	1	$	46.00
001992	1/2"SQ. Torsion Spring Kit (79Rail)	1	$	273.00
001993	5/8"SQ. Torsion Spring Kit (79Rail)	1	$	273.00
001994	3/4"SQ. Torsion Spring Kit (79Rail)	1	$	273.00
001995	1/2"SQ. Torsion Spring Kit (85Rail)	1	$	273.00
001996	5/8"SQ. Torsion Spring Kit (85Rail)	1	$	273.00
001997	3/4"SQ. Torsion Spring Kit (85Rail)	1	$	273.00
001998	1/2"SQ. Torsion Spring Kit (89Rail)	1	$	273.00
001999	5/8"SQ. Torsion Spring Kit (89Rail)	1	$	273.00
002000	3/4"SQ. Torsion Spring Kit (89Rail)	1	$	273.00
002005	Aluminum Railgate Replacement Latch Lever	1	$	46.95
002006	All Aluminum Railgate Replacement Latch Plate-Right	1	$	151.00
002007	All Aluminum Railgate Replacement Latch Plate-Left	1	$	88.15
002015	Replacement G2 Upright Cap	2	$	10.15
002017	G2 Replacement Latch Kit	2	$	34.25
002020	Replacement Platform Latch Pin Assembly (G2)	2	$	8.95
002033	Replacement Steel Latch Plate-Right	1	$	134.00
002034	5/8"SQ. Torsion Spring Kit (95Rail)	1	$	273.00
002040	54-40 G2 Replacement Upper Arm Assembly	1	$	511.00
002041	60-40 G2 Replacement Upper Arm Assembly	1	$	539.00
002042	64-40 G2 Replacement Upper Arm Assembly	1	$	563.00
002044	54-40 G2 Replacement Sub Assembly	1	$	309.00
002045	60-40 G2 Replacement Sub Assembly	1	$	319.00
002046	64-40 G2 Replacement Sub Assembly	1	$	325.00
002054	5/8"SQ. Torsion Spring Kit (73Rail)	1	$	273.00
002087	3/4"SQ. Torsion Spring Kit (95Rail)	1	$	273.00
002143	Replacement G2 Sub Assembly Belting	2	$	16.40
002180	7/8" Replacement G2 Upright Back Cylinder Pin	2	$	33.30
002181	3/4" Replacement G2 Upright Back Arm Pin & Bushing	2	$	36.35
002182	G2 Replacement Clevis Cylinder Assembly	2	$	51.85
002183	3/4" Replacement G2 Upright Front Arm Pin	4	$	33.45
002202	5/8"SQ. Torsion Spring Kit (A89Rail)	1	$	273.00
002203	Replacement Flipper Stop (650-31)	1	$	10.15
002204	Replacement Platform Wear Bushing Kit	1	$	10.15
002205	Replacement 650 Platform Latch	1	$	19.40
002206	Replacement 650 Support Tube Assembly	1	$	276.00
002207	650 Pin Kit (Lower 4x4 Lift Tube)	1	$	21.20
002208	650 Pin Kit (Lower S-Arm)	1	$	21.20
002209	Replacement 650 Main Lift Tube (4x4x26.12)	1	$	176.00
002210	650 Pin Kit (Upper 3x3 Lift Tube)	1	$	21.20
002211	650 Latch & Self Close Bushing Kit	2	$	6.25
002212	Replacement Vertical Lift Tube (3x3x30.68)	1	$	230.00
002224	1/2"SQ. Torsion Spring Kit (95Rail)	1	$	273.00
002324	Replacement Horizontal Tube Assembly (BR)	2	$	123.00
002325	Replacement Bottle Rack Fence-Left	1	$	195.00
002326	Replacement Bottle Rack Taper (79)	1	$	91.50
002327	Replacement Bottle Rack Taper (85)	1	$	105.00
002328	Replacement Bottle Rack Taper (89)	1	$	113.00
002329	Replacement Bottle Rack Fence-Right	1	$	195.00

002330	Replacement Pivot Plate (BR)	2	$	31.35
002331	Replacement Pivot Pin w/Snap Ring (BR)	4	$	15.95
002332	Replacement Bottle Rack Taper (95)	1	$	124.00
002333	Replacement Bottle Rack Taper (73)	1	$	84.75
002480	Torsion Assist Spring Kit (650)	1	$	46.00
002481	Replacement Guide Bushing & O-ring Kit (650)	1	$	76.80
002482	650 Pivot Latch Kit (Black Knob)	1	$	19.40
002508	(64SB) 42" Extruded Aluminum Replacement Platform	1	$	1,508.00
002509	(80) 42" Extruded Aluminum Replacement Platform	1	$	1,827.00
002510	Replacement Rail Platform Stop (TA)	2	$	40.90
002513	(86) 42" Extruded Aluminum Replacement Platform	1	$	1,883.00
002514	Retro 72 LND Replacement Platform & Sub Assembly Kit	1	$	1,259.00
002515	Retro 80 LND Replacement Platform & Sub Assembly Kit	1	$	1,281.00
002516	Retro 86 LND Replacement Platform & Sub Assembly Kit	1	$	1,380.00
002517	Retro 91 LND Replacement Platform & Sub Assembly Kit	1	$	1,393.00
002520	72P/72S-F11 Replacement EA Flipper	1	$	501.00
002523	(81) G2 35" Treadplate Replacement Platform	1	$	731.00
002524	(81) G2 41" Treadplate Replacement Platform	1	$	1,060.00
002525	(81) G2 37" Extruded Aluminum Replacement Platform	1	$	1,478.00
002526	(81) G2 41" Extruded Aluminum Replacement Platform	1	$	1,827.00
002527	(87) G2 35" Treadplate Replacement Platform	1	$	753.00
002528	(87) G2 41" Treadplate Replacement Platform	1	$	1,082.00
002529	(87) G2 37" Extruded Aluminum Replacement Platform	1	$	1,533.00
002530	(87) G2 41" Extruded Aluminum Replacement Platform	1	$	1,883.00
002531	(92) G2 35" Treadplate Replacement Platform	1	$	766.00
002532	(92) G2 41" Treadplate Replacement Platform	1	$	1,095.00
002533	(92) G2 37" Extruded Aluminum Replacement Platform	1	$	1,581.00
002534	(92) G2 41" Extruded Aluminum Replacement Platform	1	$	1,931.00
002535	73-50 G2 Replacement Sub Assembly	1	$	430.00
002536	81-50 G2 Replacement Sub Assembly	1	$	447.00
002537	87-50 G2 Replacement Sub Assembly	1	$	463.00
002538	92-50 G2 Replacement Sub Assembly	1	$	477.00
002539	G2 (50) Replacement Lower Arm w/Pins & Bushings	2	$	120.00
002540	G2 (50) Replacement Clevis Cylinder Assembly	2	$	53.75
002541	73-50 G2 Replacement Upper Arm Assembly	1	$	622.00
002542	81-50 G2 Replacement Upper Arm Assembly	1	$	676.00
002543	87-50 G2 Replacement Upper Arm Assembly	1	$	713.00
002544	92-50 G2 Replacement Upper Arm Assembly	1	$	743.00
002549	Replacement Box Cover (73G2)	1	$	91.70
002551	Replacement Box Cover (81G2)	1	$	95.75
002553	Replacement Box Cover (87G2)	1	$	97.80
002555	Replacement Box Cover (92G2)	1	$	101.00
002558	Replacement 1650 G2 Pump & Motor Unit (2500psi)	1	$	522.00
002559	Replacement G2 Cylinder (50)	2	$	519.00
002560	Replacement G2 Sub Assembly Belting (50)	2	$	22.75
002561	Replacement G2 Cylinder Shaft Complete (50)	2	$	281.00
002578	Replacement 1/4"X26-1/4" Hydraulic Hose-Left (G2)	1	$	34.80
002579	Replacement 1/4"x66-3/4" Hydraulic Hose-Right (65-73G2)	1	$	53.90
002580	Replacement 1/4"x80-3/4" Hydraulic Hose-Right (81-87G2)	1	$	55.65
002581	Replacement 1/4"x85-3/4" Hydraulic Hose-Right (92G2)	1	$	56.70
002583	G2 (50) Replacement Latch Kit-Left	1	$	34.95
002584	G2 (50) Replacement Latch Kit-Right	1	$	34.95
002585	(73) G2 35" Treadplate Replacement Platform	1	$	675.00
002590	(73) G2 41" Treadplate Replacement Platform	1	$	1,004.00

002591	(73) G2 37" Extruded Aluminum Replacement Platform	1	$	1,327.00
002599	(73) G2 41" Extruded Aluminum Replacement Platform	1	$	1,676.00
002646	(72) 42" Extruded Aluminum Replacement Platform	1	$	1,676.00
002722	Replacement Flipper Arm Self-Closing Rod	1	$	26.40
002723	Replacement Pivot Pin Sleeve (650)	1	$	65.95
002724	Replacement 650 Lift Arm	1	$	193.00
002725	Replacement 650 Cylinder	1	$	608.00
002726	M259 Replacement Pump & Motor Unit (1.5L) (1550psi)	1	$	522.00
002727	Replacement 650 Release Solenoid External Assembly w/Connector	1	$	105.00
002728	650 Replacement Tank	1	$	123.00
002863	Rail (R-Fold 30" Base) Replacement Platform Chain	2	$	59.10
002864	Rail (R-Fold 35" Base) Replacement Platform Chain	2	$	63.65
002867	Replacement Steel R-fold Latch Plate-Right	1	$	165.00
002868	Replacement Steel R-fold Latch Plate-Left	1	$	101.00
002869	All Aluminum R-fold Railgate Replacement Latch Plate-Right	1	$	183.00
002870	All Aluminum R-fold Railgate Replacement Latch Plate-Left	1	$	119.00
002886	1/2"SQ. Torsion Spring Kit (73Rail)	1	$	273.00
002887	1/2"SQ. Torsion Spring Kit (A73Rail)	1	$	273.00
002888	5/8"SQ. Torsion Spring Kit (A73Rail)	1	$	273.00
002889	1/2"SQ. Torsion Spring Kit (A79Rail)	1	$	273.00
002890	5/8"SQ. Torsion Spring Kit (A79Rail)	1	$	273.00
002891	3/4"SQ. Torsion Spring Kit (A79Rail)	1	$	273.00
002892	1/2"SQ. Torsion Spring Kit (A85Rail)	1	$	273.00
002893	5/8"SQ. Torsion Spring Kit (A85Rail)	1	$	273.00
002894	3/4"SQ. Torsion Spring Kit (A85Rail)	1	$	273.00
002895	1/2"SQ. Torsion Spring Kit (A89Rail)	1	$	273.00
002896	3/4"SQ. Torsion Spring Kit (A89Rail)	1	$	273.00
002897	1/2"SQ. Torsion Spring Kit (A95Rail)	1	$	273.00
002898	5/8"SQ. Torsion Spring Kit (A95Rail)	1	$	273.00
002899	3/4"SQ. Torsion Spring Kit (A95Rail)	1	$	273.00
002939	Universal Set 7/32" Replacement Lift Cable Kit (Not for Mini)	1	$	117.00
002992	Replacement R-Fold Latch Kit	2	$	36.05
003123	Set 7/32" Replacement Lift Cable Kit (Model 60 Only)	1	$	96.60
003124	Universal Set 5/16" Replacement Lift Cable Kit	1	$	193.00
003169	72P/72S EA Replacement Sub Assembly	1	$	252.00
003172	(95) SC 55+12 Replacement Aluminum Platform	1	$	3,067.00
003188	1046-1650 Replacement Platform Chain	2	$	52.20
003220	Cylinder Shaft w/Pulley Assembly (1346) Includes: Cylinder Repair Kit	1	$	207.00
003221	Cylinder Shaft w/Sprockets Assembly (Rail) Includes: Cylinder Repair Kit	1	$	384.00
003222	Cylinder Shaft w/Pulley Assembly (1040) Includes: Cylinder Repair Kit (54-1040 &	1	$	136.00
003223	Cylinder Shaft w/Pulley Assembly (1046) Includes: Cylinder Repair Kit	1	$	193.00
003224	Cylinder Shaft w/Pulley Assembly (1034 & 1036) Includes: Cylinder Repair Kit	1	$	136.00
003225	Cylinder Shaft w/Pulley Assembly (1348-1350) Includes: Cylinder Repair Kit	1	$	207.00
003226	Cylinder Shaft w/Pulley Assembly (1648-1650) Includes: Cylinder Repair Kit	1	$	239.00
003227	Cylinder Shaft w/Pulley Assembly (1340) Includes: Cylinder Repair Kit (54-1040 &	1	$	162.00
003228	Cylinder Shaft w/Pulley Assembly (1646) Includes: Cylinder Repair Kit	1	$	223.00
003249	Replacement Cylinder Barrel (after serial # 470166M)	2	$	213.00
003250	Replacement Cylinder Barrel Assembly (1034-1036) Includes: Cylinder Repair Kit	1	$	144.00
003251	Replacement Cylinder Barrel Assembly (1040) Includes: Cylinder Repair Kit (54-1	1	$	151.00
003252	Replacement Cylinder Barrel Assembly (1340) Includes: Cylinder Repair Kit (1340	1	$	193.00
003253	Replacement Cylinder Barrel Assembly (1046) Includes: Cylinder Repair Kit	1	$	211.00
003254	Replacement Cylinder Barrel Assembly (1348-1650) Includes: Cylinder Repair Kit	1	$	270.00
003256	Replacement Cylinder Barrel Assembly (1346-1646) Includes: Cylinder Repair Kit	1	$	270.00
003257	2"x35" Replacement Cylinder Barrel (Rail) Includes: Cylinder Repair Kit	1	$	300.00

003287	Cylinder Shaft w/Sprockets Assembly (73 Rail) Includes: Cylinder Repair Kit	1	$	384.00
003290	2"x29" Replacement Cylinder Barrel (73 Rail) Includes: Cylinder Repair Kit	1	$	300.00
003323	(89) SC 55+12 Replacement Aluminum Platform	1	$	2,954.00
003432	64SB-1646 Replacement Cylinder	1	$	346.00
003549	60 Toyota Replacement Sub Assembly	1	$	231.00
003551	Mini Replacement Sub Assembly	1	$	210.00
003552	48 Replacement Sub Assembly	1	$	210.00
003553	Dakota & Isuzu Replacement Sub Assembly	1	$	218.00
003554	54 Replacement Sub Assembly	1	$	218.00
003556	60 Replacement Sub Assembly	1	$	231.00
003558	64 Replacement Sub Assembly	1	$	239.00
003560	64SB Replacement Sub Assembly	1	$	249.00
003563	72 Replacement Sub Assembly	1	$	249.00
003568	80 Replacement Sub Assembly	1	$	249.00
003572	86 Replacement Sub Assembly	1	$	325.00
003576	91 Replacement Sub Assembly	1	$	325.00
003584	72P Replacement Sub Assembly	1	$	252.00
003588	Mini EA Replacement Sub Assembly	1	$	210.00
003589	48EA Replacement Sub Assembly	1	$	210.00
003590	Dakota EA Replacement Sub Assembly	1	$	218.00
003591	54EA Replacement Sub Assembly	1	$	218.00
003592	60 Toyota EA Replacement Sub Assembly	1	$	231.00
003593	60EA Replacement Sub Assembly	1	$	231.00
003594	64EA Replacement Sub Assembly	1	$	239.00
003595	64SB EA Replacement Sub Assembly	1	$	249.00
003596	72EA Replacement Sub Assembly	1	$	249.00
003597	80EA Replacement Sub Assembly	1	$	249.00
003598	86EA Replacement Sub Assembly	1	$	325.00
003599	91EA Replacement Sub Assembly	1	$	325.00
003688	Torsion Spring w/Hardware (Mini & 48)	1	$	36.75
003689	Torsion Spring w/Hardware (Dakota, Isuzu & 54)	1	$	36.75
003690	Torsion Spring w/Hardware (Toyota T-100 & 60)	1	$	36.75
003691	Torsion Spring Kit (64)	1	$	36.75
003692	Torsion Spring Kit (72)	1	$	36.75
003693	Torsion Spring Kit (80)	1	$	36.75
003694	Torsion Spring Kit (86)	1	$	36.75
003695	Torsion Spring Kit (91)	1	$	36.75
003698	Old Style SQ. Torsion Spring Kit (86)	1	$	94.00
003699	Old Style SQ. Torsion Spring Kit (91)	1	$	94.00
003818	Replacement Kickaway Spring w/Pin	2	$	8.55
003840	TP 1034 Replacement Platform Chain	2	$	35.55
003841	1036-1040 Replacement Platform Chain (54-1040 & 60-1040 before serial # 45922	2	$	42.30
003842	1340 Replacement Platform Chain (54-1040 & 60-1040 after serial # 462473M)	2	$	39.20
003846	1034 EA Replacement Platform Chain	2	$	35.55
003847	36" & 40" Travel EA Replacement Platform Chain	2	$	39.20
003848	50" Travel EA Replacement Platform Chain (with 1.579" Pin)	2	$	48.80
003849	40+8 Replacement Platform Chain	2	$	65.30
003883	Replacement G2 Treadplate Platform Chain	2	$	28.35
003884	48" Deep & 50" Travel EA Replacement Platform Chain	2	$	54.45
003894	Rail (BH) Replacement Platform Chain	2	$	75.45
003895	Rail (AB) Replacement Platform Chain	2	$	66.85
003896	Rail (BH) 65+6 Replacement Platform Chain	2	$	80.00
004036	Replacement License Plate Light & Bracket (154C)	1	$	23.15
004052	64SB Replacement Sub Assembly	1	$	283.00

004054	72 Replacement Sub Assembly	1	$	300.00
004056	80 Replacement Sub Assembly	1	$	325.00
004058	86 Replacement Sub Assembly	1	$	337.00
004060	91 Replacement Sub Assembly	1	$	350.00
004079	M319 Replacement Pump & Motor (3800psi) 3qt.** 1046	1	$	522.00
004149	13 Tooth Replacement Sprocket, Pin & Keeper	LB=3, BH=	$	51.05
004156	Replacement Steel Box Cover w/Lights (73SC) (N)	1	$	232.00
004157	Replacement Steel Box Cover w/Lights (79SC) (N)	1	$	241.00
004158	Replacement Steel Box Cover w/Lights (85SC) (N)	1	$	263.00
004159	Replacement Steel Box Cover w/Lights (89SC) (N)	1	$	300.00
004160	Replacement Steel Box Cover w/Lights (95SC) (N)	1	$	326.00
004161	Replacement Alum. AB Sprocket Assembly	2	$	61.10
004162	Replacement Steel AB Sprocket Assembly	2	$	61.10
004175	3” Double (7/32”) Groove Replacement Pulley Kit with 3/4" Cross Box Pin (60-104	1	$	32.70
004176	3” Single (7/32”) Groove Replacement Pulley Kit with 3/4" Cross Box Pin(60-1040	1	$	32.70
004177	3” Single (7/32”) Groove Replacement Pulley Kit with 3/4” Upright Pin	2	$	26.25
004179	3.5" Double (7/32") Groove Replacement Pulley Kit with 7/8" Cross Box Pin (60-1	1	$	32.70
004180	3.5" Single (7/32") Groove Replacement Pulley Kit with 7/8" Cross Box Pin (60-10	1	$	32.70
004181	4" Dia. Double (7/32") Groove Replacement Pulley Kit with 7/8" Cross Box Pin	1	$	62.50
004182	4" Dia. Double (5/16") Groove Replacement Pulley Kit with 7/8" Cross Box Pin	1	$	62.50
004183	4" Single (7/32") Groove Replacement Pulley Kit with 7/8" Upright Pin	2	$	53.15
004184	4" Single (5/16") Groove Replacement Pulley Kit with 7/8" Upright Pin	2	$	53.15
004185	4" Dia. Single (7/32") Groove Replacement Pulley Kit with 7/8" Cross Box Pin	1	$	62.50
004186	4" Dia. Single (5/16") Groove Replacement Pulley Kit with 7/8" Cross Box Pin	1	$	62.50
004188	19-Tooth Repair Sprocket with 3/4"x2" Pin & Keeper	1	$	53.15
004189	25-Tooth Repair Sprocket with 3/4"x2" Pin & Keeper	1	$	77.70
004190	13 Tooth Replacement Sprocket (Above-Bed only) with 3/4"x3" Pin & Keeper	2	$	46.95
004191	13 Tooth Replacement Sprocket, Pin & Keeper (All Aluminum)	LB=3, BH=	$	61.10
004192	13 Tooth All Aluminum Replacement Sprocket, Pin & Keeper (Above-Bed only)	2	$	50.10
004196	Replacement Alum BH Outrail Cap	2	$	22.55
004197	Replacement Steel BH Outrail Cap	2	$	20.50
004245	Replacement Aluminum Box Cover w/Lights (89SC) (N)	1	$	468.00
004246	Replacement Aluminum Box Cover w/Lights (73SC) (N)	1	$	412.00
004247	Replacement Aluminum Box Cover w/Lights (79SC) (N)	1	$	431.00
004248	Replacement Aluminum Box Cover w/Lights (85SC) (N)	1	$	452.00
004249	Replacement Aluminum Box Cover w/Lights (95SC) (N)	1	$	489.00
004290	M319 Replacement Pump & Motor (2600psi) 3qt.** 1600# Railgate (N)	1	$	522.00
004291	M319 Replacement Pump & Motor (3200psi) 3qt.** 2000# Railgate (N)	1	$	522.00
004295	M319 Replacement Pump & Motor (2000psi) 3qt.** 1046-1050	1	$	522.00
004354	Replacement Monarch Plastic Tank (2qt.)** 73 Railgate	1	$	62.25
004355	Replacement 3qt. Monarch Plastic Tank (G2) **	1	$	62.25
004360	M319 Replacement Pump & Motor (2100psi) 1.5qt.** Mini 500	1	$	522.00
004362	M319 Replacement Pump & Motor (3800psi) 1.5qt.** 1034,1036,1040(54-1040 &	1	$	522.00
004363	M319 Replacement Pump & Motor (3400psi) 1.5qt.** 1340	1	$	522.00
004365	M319 Replacement Pump & Motor (2500psi) 3qt.** 1346 Thru 1350	1	$	522.00
004366	M319 Replacement Pump & Motor (3000psi) 3qt.** 1646 Thru 1650	1	$	522.00
004485	M319 Replacement Pump & Motor (2600psi) 2qt.** 1600# Railgate (73) (N)	1	$	522.00
004486	M319 Replacement Pump & Motor (3200psi) 2qt.** 2000# Railgate (73) (N)	1	$	522.00
004559	72P w/F11 EA Replacement Platform	1	$	1,022.00
004565	72P/72S 37+11+6 EA Replacement Platform	1	$	1,299.00
004570	Replacement 4 Ga. 2 Wire Electrical Cable w/Lugs 26ft.	1	$	103.00
004589	48 37+11+6 EA Replacement Platform	1	$	1,074.00
004708	Replacement 4 Ga. 2 Wire Electric Cable w/Lugs-33 ft.	1	$	130.00
004710	Replacement Steel Box Cover w/Lights (73SC)	1	$	232.00

004712	EA Replacement Platform Chain Pin (1.079")	2	$	9.50
004713	EA Replacement Latch Rivet(1.5")	2	$	10.90
004715	EA Replacement Platform Chain Pin (1.579")	2	$	10.70
004716	EA Replacement Latch Rivet (2")	2	$	10.90
004717	EA Replacement Flipper Rivet	2	$	11.20
004760	Replacement Steel Box Cover w/Lights (79SC)	1	$	241.00
004762	Replacement Steel Box Cover w/Lights (85SC)	1	$	263.00
004764	Replacement Steel Box Cover w/Lights (89SC)	1	$	300.00
004772	Replacement Steel Box Cover w/Lights (95SC)	1	$	326.00
004798	64/65 48" EA Replacement Platform	1	$	1,217.00
004799	60 48 EA Replacement Platform	1	$	1,176.00
004820	54 48 EA Replacement Platform	1	$	1,140.00
004833	54 G2 27" Treadplate Replacement Platform	1	$	367.00
004834	54 G2 38" Treadplate Replacement Platform	1	$	532.00
004835	54 G2 42" Treadplate Replacement Platform	1	$	545.00
004837	Replacement Box Cover (54 G2)	1	$	83.00
004866	60 G2 27" Treadplate Replacement Platform	1	$	392.00
004867	60 G2 38" Treadplate Replacement Platform	1	$	577.00
004868	60 G2 42" Treadplate Replacement Platform	1	$	616.00
004949	Replacement Box Cover (60 G2)	1	$	87.10
004950	Replacement Box Cover (64 G2)	1	$	89.45
004961	Replacement Box Cover (Mini & 48)	1	$	29.35
004962	Replacement Box Cover (Dakota, Isuzu & 54)	1	$	32.75
004963	Replacement Box Cover (Toyota T-100 & 60)	1	$	36.45
004964	Replacement Box Cover (64)	1	$	39.35
004965	Replacement Box Cover (72)	1	$	43.20
004966	Replacement Box Cover (80)	1	$	48.45
004967	Replacement Box Cover (86)	1	$	51.95
004968	Replacement Box Cover (91)	1	$	55.10
006329	72LD Replacement Sub Assembly (For Retro Kit # 2514 Only)	1	$	300.00
006330	80LD Replacement Sub Assembly (For Retro Kit # 2515 Only)	1	$	325.00
006331	86LD Replacement Sub Assembly (For Retro Kit # 2516 Only)	1	$	337.00
006332	91LD Replacement Sub Assembly (For Retro Kit # 2517 Only)	1	$	350.00
006374	(73) SC 55+12 Replacement Aluminum Platform	1	$	2,775.00
006419	(85) TA 35+10+12 Replacement Aluminum R-Fold Platform	1	$	2,681.00
006420	(89) TA 35+10+12 Replacement Aluminum R-Fold Platform	1	$	2,909.00
006422	(85) TA 35+15+6 Replacement Aluminum R-Fold Platform	1	$	2,799.00
006425	48 & Mini Replacement Hinge Tube - Steel Platform	1	$	32.75
006426	54, Dakota & Isuzu Replacement Hinge Tube - Steel Platform	1	$	32.75
006427	60 & Toyota Replacement Hinge Tube - Steel Platform	1	$	32.75
006428	64 Replacement Hinge Tube - Steel Platform	1	$	32.75
006429	72 Replacement Hinge Tube - Steel Platform		$	38.45
006430	80 Replacement Hinge Tube- Steel Platform	1	$	48.85
006431	86 Replacement Hinge Tube- Steel Platform	1	$	48.85
006432	91 Replacement Hinge Tube- Steel Platform	1	$	48.85
006433	88" Replacement Hinge Tube (85)	1	$	88.55
006434	92" Replacement Hinge Tube (89)	1	$	88.55
006435	82-1/2"" Replacement Hinge Tube (79)	1	$	88.55
006436	98" Replacement Hinge Tube (95)	1	$	88.55
006437	76-1/2" Replacement Hinge Tube (73)	1	$	88.55
006446	(89) TA 35+15+6 Replacement Aluminum R-Fold Platform	1	$	3,027.00
006447	(85) TA 30+15+6 Replacement Aluminum R-Fold Platform	1	$	2,681.00
006448	(89) TA 30+15+6 Replacement Aluminum R-Fold Platform	1	$	2,909.00
006466	Replacement R-Fold Hinge Kit	2	$	66.35

006473	Replacement 38" EA Platform Chain	2	$	35.55
006494	(79) SC 55+12 Replacement Aluminum Platform	1	$	2,843.00
006514	Replacement Cloth Chain Cover 20"	2	$	13.00
006515	Replacement Cloth Chain Cover 17"	2	$	13.00
006516	Replacement Cloth Chain Cover 29"	2	$	13.00
006593	Replacement Cloth Chain Cover 53"	2	$	13.00
006596	Replacement Cloth Chain Cover 38"	2	$	13.00
006597	Replacement Cloth Chain Cover 46"	2	$	13.00
006832	1-1/2" Replacement Cylinder Clamp (1034-1040) (54-1040 & 60-1040 before serial	1	$	8.20
006833	1-3/4" & 2" Replacement Cylinder Clamp (1340-1650) (54-1040 & 60-1040 after se	1	$	8.20
006834	Replacement Cylinder Clamp (Rail)	1	$	8.20
006835	Replacement Cylinder Clamp (All Aluminum Rail)	1	$	9.40
007007	G2 Replacement Lower Arm w/Pins & Bushings	2	$	120.00
007010	1034-1036 Replacement Lift Arm w/Pins & Zerks	4	$	50.05
007031	M319 Replacement Pump & Motor (2800psi) 1.5qt.** (54-1040 & 60-1040 after se	1	$	522.00
007290	Replacement All Aluminum Self-Close Arm Kit (Right)	1	$	91.90
007292	Replacement Steel Rail Roller Chain Cover (Above-Bed) (N)	2	$	20.50
007293	Replacement Aluminum Rail Roller Chain Cover (Above-Bed) (N)	2	$	27.25
007516	Replacement Threaded Latch Bushing	2	$	6.25
007545	3/4" Arm Pin w/Zerk (before serial # M-83394)	10	$	6.25
007547	7/8" Arm Pin w/Zerk (before serial # M-82341-1000#&1300#)	10	$	6.25
007866	Replacement Roller Chain Cover (Above-Bed only)	2	$	20.50
007884	Replacement All Aluminum Rail Roller Chain Cover (Above-Bed only)	2	$	27.25
007947	Roller Chain Adjustment Screw, Clevis & Pin	2	$	31.90
007979	(A85SC) Replacement Safety Trip Bar-77-1/2"	1	$	81.60
007980	(A89SC) Replacement Safety Trip Bar-81-1/2"	1	$	81.60
007992	(A73SC) Replacement Safety Trip Bar-65-1/2"	1	$	81.60
007993	(A79SC) Replacement Safety Trip Bar-71-1/2"	1	$	81.60
007994	(A95SC) Replacement Safety Trip Bar-87-1/2"	1	$	81.60
007995	Railgate Replacement Self-Close Rod & Linkage (95)	1	$	83.70
008002	Replacement Self-Close Safety Trip Bar-65-1/2" (73)	1	$	48.60
008020	173 Pitch Replacement Roller Chain Bed-Height Passenger's Side	1	$	154.00
008021	281 Pitch Replacement Roller Chain Above-Bed Passenger's Side	1	$	237.00
008022	219 Pitch Replacement Roller Chain Bed-Height Driver's Side	1	$	186.00
008023	325 Pitch Replacement Roller Chain Above-Bed Driver's Side	1	$	266.00
008024	EA Torsion Spring Kit (48)	1	$	64.40
008025	Torsion Spring Kit (54)	1	$	64.40
008026	Torsion Spring Kit (60)	1	$	64.40
008027	Torsion Spring Kit (64/65)	1	$	64.40
008028	Torsion Spring Kit (73) Steel Platform	1	$	64.40
008029	EA Torsion Spring Kit (81)	1	$	64.40
008030	Replacement Roller Chain Attachment Fitting	2	$	26.05
008032	EA Torsion Spring Kit (87)	1	$	64.40
008033	EA Torsion Spring Kit (92)	1	$	64.40
008035	229 Pitch Replacement Roller Chain Bed-Height Driver's Side (95)	1	$	193.00
008044	335 Pitch Replacement Roller Chain Above-Bed Driver's Side (95)	1	$	269.00
008058	Railgate Replacement Self-Close Linkage Only (Excludes Rod)	1	$	49.85
008059	Railgate Replacement Self-Close Rod & Linkage (89)	1	$	83.70
008060	Railgate Replacement Self-Close Rod & Linkage (85)	1	$	83.70
008061	Railgate Replacement Self-Close Rod & Linkage (79)	1	$	83.70
008062	Replacement Self-Close Safety Trip Bar-77-1/2" (85)	1	$	48.60
008063	Replacement Self-Close Safety Trip Bar-81-1/2" (89)	1	$	48.60
008064	Replacement Self-Close Safety Trip Bar-71-1/2" (79)	1	$	48.60
008065	Replacement Self-Close Safety Trip Bar-87-1/2" (95)	1	$	48.60

008066	1-3/4" Replacement Self-Close Roller Kit	2	$	14.35
008067	Repair Self-Close Arm Bushing Kit-Steel Platform	2	$	12.90
008068	Repair Self-Close Arm Bushing Kit-Aluminum Platform	2	$	19.55
008071	Aluminum Railgate Replacement Self-Close Rod & Linkage (85)	1	$	91.70
008072	Aluminum Railgate Replacement Self-Close Rod & Linkage (89)	1	$	91.70
008082	EA 37+11+6 Torsion Spring Kit (48)	1	$	64.40
008083	Torsion Spring Kit (54) Deep Platform	1	$	64.40
008084	Torsion Spring Kit (60) Deep Platform	1	$	64.40
008085	Torsion Spring Kit (64/65) Deep Platform	1	$	64.40
008092	Railgate Replacement Self-Close Rod & Linkage (73)	1	$	83.70
008093	Aluminum Railgate Replacement Self-Close Rod & Linkage (73)	1	$	91.70
008094	Aluminum Railgate Replacement Self-Close Rod & Linkage (79)	1	$	91.70
008095	Aluminum Railgate Replacement Self-Close Rod & Linkage (95)	1	$	91.70
008116	EA Torsion Spring Kit (73)	1	$	64.40
008117	SQ. Torsion Spring Kit (81)	1	$	112.00
008118	SQ. Torsion Spring Kit (87)	1	$	112.00
008119	SQ. Torsion Spring Kit (92)	1	$	112.00
008128	Replacement All Aluminum Self-Close Arm Kit (Left)	1	$	91.90
008129	(A73SC) Replacement Safety Trip Bar-65-1/2" (N)	1	$	81.60
008130	(A79SC) Replacement Safety Trip Bar-71-1/2" (N)	1	$	81.60
008131	(A85SC) Replacement Safety Trip Bar-77-1/2" (N)	1	$	81.60
008132	(A89SC) Replacement Safety Trip Bar-81-1/2" (N)	1	$	81.60
008133	(A95SC) Replacement Safety Trip Bar-87-1/2" (N)	1	$	81.60
008136	Replacement Steel Platform Self-Close Arm Kit- Right	1	$	53.15
008137	Replacement Steel Platform Self-Close Arm Kit- Left	1	$	53.15
008138	2" Replacement Self-Close Roller Kit	2	$	14.35
008139	Replacement Aluminum Platform Self-Close Arm Kit- Right	1	$	63.00
008140	Replacement Aluminum Platform Self-Close Arm Kit- Left	1	$	63.00
008169	(73SC) Replacement Safety Trip Bar-65-1/2" (N)	1	$	48.60
008170	(79SC) Replacement Safety Trip Bar-71-1/2" (N)	1	$	48.60
008171	(85SC)Replacement Safety Trip Bar-77-1/2" (N)	1	$	48.60
008172	(89SC) Replacement Safety Trip Bar-81-1/2" (N)	1	$	48.60
008173	(95SC) Replacement Safety Trip Bar-87-1/2" (N)	1	$	48.60
008179	Replacement Rail Cylinder Pin & Keeper (Alum)	1	$	35.70
008222	Replacement Rail Cylinder Pin & Keeper	1	$	30.50
008363	Replacement Left Cartstop Assembly (73) w/Spring (not in taper)	1	$	125.00
008364	Replacement Right Cartstop Assembly (73) w/Spring (not in taper)	1	$	125.00
008365	Replacement Left Cartstop Assembly (95) w/Spring (not in taper)	1	$	133.00
008366	Replacement Right Cartstop Assembly (95) w/Spring (not in taper)	1	$	133.00
008390	Replacement Left Cartstop Assembly (79) w/Spring (not in taper)	1	$	127.00
008391	Replacement Left Cartstop Assembly (85) w/Spring (not in taper)	1	$	129.00
008392	Replacement Left Cartstop Assembly (89) w/Spring (not in taper)	1	$	131.00
008393	Replacement Right Cartstop Assembly (79) w/Spring (not in taper)	1	$	127.00
008394	Replacement Right Cartstop Assembly (85) w/Spring (not in taper)	1	$	129.00
008395	Replacement Right Cartstop Assembly (89) w/Spring (not in taper)	1	$	131.00
008396	Replacement Cartstop Spring Assembly (not in taper)	2	$	19.80
008397	Replacement Cartstop Latch Assembly (L) (not in taper)	1	$	74.95
008398	Replacement Cartstop Latch Assembly (R) (not in taper)	1	$	74.95
008591	Replacement Bearing Pad Set (Aluminum Mainframe)	2	$	37.30
008618	Replacement Bearing Pad Set (Steel Mainframe)	2	$	37.30
008628	44" Replacement Slider w/Pads-Left Self-Close (Steel Mainframe-BH)	1	$	211.00
008629	44" Replacement Slider w/Pads-Right Self-Close (Steel Mainframe-BH)	1	$	211.00
008654	44" Replacement Slider w/Pads-Left Self-Close (Alum. Mainframe-BH)	1	$	211.00
008655	44" Replacement Slider w/Pads-Right Self-Close (Alum. Mainframe-BH)	1	$	211.00

009488	(72) LD Treadplate Replacement Platform (New Style)	1	$	1,029.00
009489	(80) LD Treadplate Replacement Platform (New Style)	1	$	1,053.00
009491	Replacement LD Insert Latch Pin Assembly	2	$	43.75
009492	Replacement LD Insert Pivot Pin Assembly	2	$	31.35
009493	Replacement LD Insert Handle Assembly	1	$	20.50
009494	Replacement LD Access Cover	2	$	7.55
009495	Replacement Outer Platform Assembly (91LD)	1	$	286.00
009496	Replacement Outer Platform Assembly (86LD)	1	$	281.00
009497	Replacement Outer Platform Assembly (80LD)	1	$	279.00
009498	Replacement Outer Platform Assembly (72LD)	1	$	274.00
009504	Replacement Short Insert Link Assembly (LND)	1	$	20.95
009514	Replacement Long Insert Link Assembly (73LND)	1	$	63.90
009517	Replacement Long Insert Link Assembly (81LND)	1	$	63.90
009518	Replacement Long Insert Link Assembly (87LND)	1	$	63.90
009519	Replacement Long Insert Link Assembly (92LND)	1	$	63.90
009521	Replacement Latch Pin & Lanyard Kit	2	$	9.65
009534	Replacement Platform Insert (73LD)	1	$	700.00
009541	Replacement Platform Insert (81LD)	1	$	750.00
009542	Replacement Platform Insert (87LD)	1	$	781.00
009543	Replacement Platform Insert (92LD)	1	$	812.00
009552	(91) LD Treadplate Replacement Platform (New Style)	1	$	1,091.00
009553	(86) LD Treadplate Replacement Platform (New Style)	1	$	1,074.00
009573	Replacement Pendant Control	1	$	193.00
009645	Release Solenoid External Assembly w/Connector	1	$	96.75
009754	1648-1650 Replacement Cylinder	1	$	346.00
009756	1034 & 1036 Replacement Cylinder	1	$	266.00
009757	Railgate Replacement Cylinder (73)	1	$	419.00
009758	1046 Replacement Cylinder	1	$	346.00
009759	1348-1350 Replacement Cylinder	1	$	346.00
009760	Railgate Replacement Cylinder (79-95)	1	$	419.00
009761	1040 Replacement Cylinder (54-1040 & 60-1040 before serial # 459225M)	1	$	284.00
009762	1340 Replacement Cylinder (54-1040 & 60-1040 after serial # 462473M)	1	$	305.00
009763	64SB-1346 Replacement Cylinder	1	$	346.00
010199	Replacement License Plate Light & Bracket (H1)	1	$	23.25
010280	(65) G2 35" Treadplate Replacement Platform	1	$	615.00
010281	(65) G2 41" Treadplate Replacement Platform	1	$	944.00
010282	(65) G2 37" Extruded Aluminum Replacement Platform	1	$	1,156.00
010283	(65) G2 41" Extruded Aluminum Replacement Platform	1	$	1,508.00
010284	65-50 G2 Replacement Sub Assembly	1	$	396.00
010285	65-50 G2 Replacement Upper Arm Assembly	1	$	580.00
010286	Replacement Box Cover (65G2)	1	$	89.45
010288	Torsion Spring Kit (65) Steel Platform	1	$	64.40
010450	Set 7/32" Replacement Lift Cable Kit (Mini Only)	1	$	96.60
010451	650 Pivot Latch Kit (Lever)	1	$	31.55
010452	(73) G2 Lift and Dump Replacement Platform	1	$	1,029.00
010453	(81) G2 Lift and Dump Replacement Platform	1	$	1,053.00
010454	(87) G2 Lift and Dump Replacement Platform	1	$	1,074.00
010455	(92) G2 Lift and Dump Replacement Platform	1	$	1,091.00
010456	73LD G2 Replacement Sub Assembly	1	$	517.00
010457	81LD G2 Replacement Sub Assembly	1	$	525.00
010458	87LD G2 Replacement Sub Assembly	1	$	540.00
010459	92LD G2 Replacement Sub Assembly	1	$	557.00
010460	G2 (LD) Replacement Latch Kit-Left	1	$	34.95
010461	G2 (LD) Replacement Latch Kit-Right	1	$	34.95

010462	G2 Replacement Outer Platform Assembly (73LD)	1	$	274.00
010463	G2 Replacement Outer Platform Assembly (81LD)	1	$	279.00
010464	G2 Replacement Outer Platform Assembly (87LD)	1	$	281.00
010465	G2 Replacement Outer Platform Assembly (92LD)	1	$	287.00
010466	Replacement G2 LD Sub Assembly Seal Belting Kit	2	$	38.50
010512	Drop Pin Assembly Kit (Set of 2) (36-50" Travel)	1	$	26.90
010513	Drop Pin Assembly Kit (Set of 2) (Mini)	1	$	26.90
010895	Rail (AB) 65+6 Replacement Platform Chain	2	$	75.45
011252	71" Replacement Aluminum Platform	1	$	3,298.00
011253	52" Replacement Aluminum Platform	1	$	2,699.00
011254	Replacement Cantilever Platform Pivot Pin	1	$	144.00
011255	Replacement Hydraulic Hose- Fold Cylinder Long	1	$	36.80
011256	Replacement Hydraulic Hose- Fold Cylinder Short	1	$	50.20
011257	Replacement Hydraulic Hose- Lift Cylinder Long	1	$	53.35
011258	Replacement Hydraulic Hose- Lift Cylinder Short	1	$	29.70
011259	Replacement Platform Support Arm (Passenger)	1	$	318.00
011260	Replacement Platform Support Arm (Driver)	1	$	291.00
011261	Replacement Fold Cylinder (Cantilever)	1	$	539.00
011262	Cantilever Replacement Platform Pivot Sub Assembly	1	$	377.00
011263	Cantilever Replacement Lift Arm w/Pins & Keepers	1	$	599.00
011264	7/8" Replacement Cantilever Cylinder Rod Pin w/Keeper	1	$	33.75
011265	Cantilever Replacement Tension Arm w/Pins & Keepers (Left)	1	$	242.00
011266	7/8" Replacement Cantilever Cylinder Base Pin w/Keeper	1	$	37.80
011267	Replacement Cantilever Pump Box (19-38/") Cover	1	$	46.90
011268	3/4" Replacement Cantilever Tension Arm Pin w/Keeper	4	$	26.65
011269	Replacement License Plate Bracket w/Light (Sprinter)	1	$	95.00
011270	Replacement License Plate Bracket w/Light (Nissan)	1	$	40.65
011271	Replacement Limit Switch Kit (Cantilever)	1	$	70.20
011272	Replacement Cantilever Stabilizer Tube	1	$	61.20
011273	Replacement 1330 Cantilever Pump & Motor Unit (2750psi) (19-3/8" Pump Box)	1	$	1,053.00
011274	Replacement Cantilever Lift Cylinder	1	$	539.00
011275	Replacement Cantilever Pump Box (19-3/8")	1	$	131.00
011276	Replacement 04MORB x 04FPT x 90 Degree Cylinder Elbow	2	$	11.70
011277	Replacement 2qt. Monarch Plastic Tank (Cantilever)	1	$	62.25
011278	Replacement Pendant Supply Cable (Cantilever)	1	$	90.65
011279	Lift Cylinder Shaft Kit (Cantilever)	1	$	344.00
011280	1-1/4" Replacement Cantilever Lift Arm Pin w/Keeper	2	$	56.65
011281	Replacement Flow Control (Cantilever)	2	$	49.50
011283	Replacement 04MORB x 04MJIC x 90 Degree Cylinder Elbow	1	$	6.50
011284	Replacement Latch Pin w/Lanyard (Cantilever)	1	$	11.75
011285	Replacement Cantilever Cart Stop Latch Kit	2	$	19.90
011286	Cantilever Replacement Tension Arm w/Pins & Keepers (Right)	1	$	242.00
011445	Replacement Vent Plug (Cantilever) Plastic	1	$	6.50
011446	Replacement Cantilever Pendant Mounting Bracket (Sprinter, Promaster, & Transit)	1	$	10.10
011447	Replacement Cantilever Pendant Mounting Bracket (Nissan)	1	$	10.10
011448	Replacement Cantilever Pendant Mounting Bracket (Chevrolet)	1	$	10.10
011449	Replacement Cantilever Circuit Board	1	$	202.00
011450	Lift Cylinder Seal Repair Kit (Cantilever)	1	$	107.00
011452	Replacement Hydraulic Hose- Power Unit	1	$	33.60
011453	Fold Cylinder Seal Repair Kit (Cantilever)	1	$	107.00
011454	Fold Cylinder Shaft Kit (Cantilever)	1	$	344.00
011455	Replacement 04MORB-04MJIC Adapter	1	$	6.50
011675	Replacement Cantilever Sprinter Bridge	1	$	336.00
011701	Replacement Latch Pin & Lanyard (G2)	2	$	13.15

011711	(85) 36+12 SC/TA Replacement Steel Platform	1	$	1,215.00
011712	(89) 36+12 SC/TA Replacement Steel Platform	1	$	1,243.00
011713	(95) 36+12 SC/TA Replacement Steel Platform	1	$	1,329.00
011714	(85) 42+12 SC/TA Replacement Steel Platform	1	$	1,326.00
011715	(89) 42+12 SC/TA Replacement Steel Platform	1	$	1,352.00
011716	(95) 42+12 SC/TA Replacement Steel Platform	1	$	1,380.00
011717	(85) 48+12 SC/TA Replacement Steel Platform	1	$	1,330.00
011718	(89) 48+12 SC/TA Replacement Steel Platform	1	$	1,362.00
011719	(95) 48+12 SC/TA Replacement Steel Platform	1	$	1,390.00
011720	(85) 35+12 SC/TA Replacement Aluminum Platform	1	$	2,223.00
011721	(89) 35+12 SC/TA Replacement Aluminum Platform	1	$	2,297.00
011722	(95) 35+12 SC/TA Replacement Aluminum Platform	1	$	2,409.00
011723	(85) 40+12 SC/TA Replacement Aluminum Platform	1	$	2,395.00
011724	(89) 40+12 SC/TA Replacement Aluminum Platform	1	$	2,478.00
011725	(95) 40+12 SC/TA Replacement Aluminum Platform	1	$	2,601.00
011726	(85) 45+12 SC/TA Replacement Aluminum Platform	1	$	2,622.00
011727	(89) 45+12 SC/TA Replacement Aluminum Platform	1	$	2,712.00
011728	(95) 45+12 SC/TA Replacement Aluminum Platform	1	$	2,849.00
011729	(85) 50+12 SC/TA Replacement Aluminum Platform	1	$	2,793.00
011730	(89) 50+12 SC/TA Replacement Aluminum Platform	1	$	2,892.00
011731	(95) 50+12 SC/TA Replacement Aluminum Platform	1	$	3,041.00
011732	(85) 55+12 SC/TA Replacement Aluminum Platform	1	$	2,962.00
011733	(89) 55+12 SC/TA Replacement Aluminum Platform	1	$	3,069.00
011734	(95) 55+12 SC/TA Replacement Aluminum Platform	1	$	3,230.00
011735	(85) 60+12 SC/TA Replacement Aluminum Platform	1	$	3,114.00
011736	(89) 60+12 SC/TA Replacement Aluminum Platform	1	$	3,230.00
011737	(95) 60+12 SC/TA Replacement Aluminum Platform	1	$	3,403.00
011738	(85) 65+12 SC/TA Replacement Aluminum Platform	1	$	3,284.00
011739	(89) 65+12 SC/TA Replacement Aluminum Platform	1	$	3,408.00
011740	(95) 65+12 SC/TA Replacement Aluminum Platform	1	$	3,594.00
011741	(85) 70+12 SC/TA Replacement Aluminum Platform	1	$	3,455.00
011742	(89) 70+12 SC/TA Replacement Aluminum Platform	1	$	3,587.00
011743	(95) 70+12 SC/TA Replacement Aluminum Platform	1	$	3,784.00
011744	(85) 35+12 SC/TA Replacement Aluminum Platform w/Cart Stop	1	$	2,447.00
011745	(89) 35+12 SC/TA Replacement Aluminum Platform w/Cart Stop	1	$	2,528.00
011746	(95) 35+12 SC/TA Replacement Aluminum Platform w/Cart Stop	1	$	2,649.00
011747	(85) 40+12 SC/TA Replacement Aluminum Platform w/Cart Stop	1	$	2,622.00
011748	(89) 40+12 SC/TA Replacement Aluminum Platform w/Cart Stop	1	$	2,706.00
011749	(95) 40+12 SC/TA Replacement Aluminum Platform w/Cart Stop	1	$	2,841.00
011750	(85) 45+12 SC/TA Replacement Aluminum Platform w/Cart Stop	1	$	2,845.00
011751	(89) 45+12 SC/TA Replacement Aluminum Platform w/Cart Stop	1	$	2,946.00
011752	(95) 45+12 SC/TA Replacement Aluminum Platform w/Cart Stop	1	$	3,088.00
011753	(85) 50+12 SC/TA Replacement Aluminum Platform w/Cart Stop	1	$	3,017.00
011754	(89) 50+12 SC/TA Replacement Aluminum Platform w/Cart Stop	1	$	3,122.00
011755	(95) 50+12 SC/TA Replacement Aluminum Platform w/Cart Stop	1	$	3,280.00
011756	(85) 55+12 SC/TA Replacement Aluminum Platform w/Cart Stop	1	$	3,179.00
011757	(89) 55+12 SC/TA Replacement Aluminum Platform w/Cart Stop	1	$	3,300.00
011758	(95) 55+12 SC/TA Replacement Aluminum Platform w/Cart Stop	1	$	3,469.00
011759	(85) 60+12 SC/TA Replacement Aluminum Platform w/Cart Stop	1	$	3,336.00
011760	(89) 60+12 SC/TA Replacement Aluminum Platform w/Cart Stop	1	$	3,459.00
011761	(95) 60+12 SC/TA Replacement Aluminum Platform w/Cart Stop	1	$	3,643.00
011762	(85) 65+12 SC/TA Replacement Aluminum Platform w/Cart Stop	1	$	3,508.00
011763	(89) 65+12 SC/TA Replacement Aluminum Platform w/Cart Stop	1	$	3,639.00
011764	(95) 65+12 SC/TA Replacement Aluminum Platform w/Cart Stop	1	$	3,833.00

011765	(85) 70+12 SC/TA Replacement Aluminum Platform w/Cart Stop	1	$	3,679.00
011766	(89) 70+12 SC/TA Replacement Aluminum Platform w/Cart Stop	1	$	3,801.00
011767	(95) 70+12 SC/TA Replacement Aluminum Platform w/Cart Stop	1	$	4,025.00
011768	Rail (55+12 & Below) Replacement Platform Chain (37 Links)	2	$	78.35
011769	Rail (60+12 & Above) Replacement Platform Chain (47 Links)	2	$	84.55
011770	Replacement Slider	2	$	549.00
011771	Replacement Slider Wheel	1	$	99.60
011772	Replacement Slider Wheel Set	2	$	371.00
011773	Replacement 3.00 OD Pulley, Pin & Keeper	5	$	102.00
011774	Replacement Idler Pulley, Pin & Keeper	2	$	26.65
011775	Replacement 3.50 OD Pulley, Pin & Keeper	1	$	73.85
011776	Replacement 4.72 OD Pulley, Pin & Keeper	1	$	113.00
011777	Replacement Steel Box Cover w/Lights (85)	1	$	263.00
011778	Replacement Steel Box Cover w/Lights (89)	1	$	300.00
011779	Replacement Steel Box Cover w/Lights (95)	1	$	326.00
011780	Replacement Pump & Motor (3600psi) 3qt.** 2500# Railgate	1	$	522.00
011781	Replacement Pump & Motor (3800psi) 3qt.** 3000# Railgate	1	$	522.00
011785	2" Cylinder Repair Kit (25-30 Rail)	1	$	262.00
011786	Replacement Cylinder (25-30) Railgate	1	$	522.00
011787	Cylinder Shaft w/Pulleys Assembly (Rail) Includes: Cylinder Repair Kit	1	$	472.00
011788	2"x35" Replacement Cylinder Barrel (25-30 Rail) Includes: Cylinder Repair Kit	1	$	403.00
011789	Replacement Cylinder Clamp (Rail)	1	$	8.20
011790	Replacement Rail Cylinder Pin & Keeper	1	$	30.50
011791	Replacement Steel Latch Plate-Right	1	$	134.00
011792	Replacement Steel Latch Plate-Left	1	$	59.45
011793	Replacement Latch Lever Handle Grip	1	$	4.15
011794	Replacement Leaf Chain Attachment Fitting	2	$	107.00
011795	Replacement Leaf Chain 265 Pitch - Passenger's Side (BH)	1	$	608.00
011796	Replacement Leaf Chain 285 Pitch - Driver's Side (85) (BH)	1	$	644.00
011797	Replacement Leaf Chain 291 Pitch - Passenger's Side (AB)	1	$	657.00
011798	Replacement Leaf Chain 301 Pitch - Driver's Side (95) (BH)	1	$	676.00
011799	Leaf Chain Adjustment Screw, Clevis & Pin	2	$	97.00
011800	Replacement Rail Chain Cover BH	2	$	26.95
011801	Replacement Steel Upper Pulley Assembly Left	1	$	189.00
011802	Replacement Steel Upper Pulley Assembly Right	1	$	189.00
011803	Replacement 2 Ga. 2 Wire Electric Cable w/Lugs-33 ft.	1	$	262.00
011804	Replacement 200 Amp Manual Reset Circuit Breaker	1	$	78.45
011805	Replacement Self-Close Handle Grip	1	$	8.35
011806	Replacement Railgate Latch Lever	1	$	71.20
011807	Replacement Cloth Chain Cover 58"	2	$	13.00
011809	1/2"SQ. Torsion Spring Kit (85Rail)	1	$	280.00
011810	1/2"SQ. Torsion Spring Kit (89Rail)	1	$	280.00
011811	1/2"SQ. Torsion Spring Kit (95Rail)	1	$	280.00
011812	5/8"SQ. Torsion Spring Kit (85Rail)	1	$	280.00
011813	5/8"SQ. Torsion Spring Kit (89Rail)	1	$	280.00
011814	5/8"SQ. Torsion Spring Kit (95Rail)	1	$	280.00
011822	Replacement Self-Close Arm w/Hardware (Steel)	1	$	82.05
011824	Replacement Self-Close Arm w/Hardware (Alum)	1	$	93.45
011844	Replacement Handle Strap (Cantilever)	1	$	13.00
011845	Replacement Upper Platform Cover (Cantilever)	1	$	86.95
011846	Replacement Lower Platform Cover (Cantilever)	1	$	110.00
011864	36" Replacement Slider w/Pads-Self-Close (Steel Mainframe-AB) after 4/19/11	2	$	182.00
011865	36" Replacement Slider w/Pads-Self-Close (Alum. Mainframe-AB)	2	$	182.00
011872	36" Replacement Slider w/Pads-R-Fold (Steel Mainframe-AB) after 4/19/11	2	$	182.00

011873	36" Replacement Slider w/Pads-R-Fold (Alum. Mainframe-AB)	2	$	182.00
011947	Replacement 2Way/2Pos Solenoid Assembly w/Connector	2	$	96.75
011948	Replacement 4Way/2Pos Solenoid Assembly w/Connector	2	$	134.00
011949	Replacement 3Way/2Pos Solenoid Assembly w/Connector	1	$	121.00
011950	Replacement Cantilever Poppet Check Valve	2	$	28.55
012216	Replacement Driver Side Support Arm Rubber Bumper	1	$	6.85
012607	Replacement 90 Degree Elbow (Male 9/16 ORB x Female 9/16 ORB)	1	$	10.55
012608	Replacement Flow Control (9/16 M x 7/16 Fx 0.078) w/ Adapters for (3/8 M x 3/8 I	1	$	51.40
012609	Replacement 1/4"x20" Hydraulic Hose w/ Adapters (79,85,89,95)	1	$	47.20
012610	Replacement 1/4"x15" Hydraulic Hose w/ Adapters (73)	1	$	47.20
012611	Replacement 90 Degree Elbow (Male 9/16 ORB x Male 7/16 JIC)	1	$	10.55
012623	Replacement Up Stop Rod Assembly	1	$	43.25
012624	Replacement PS Latch	1	$	132.00
012625	Replacement DS Latch	1	$	106.00
012626	Replacement UHMW Poly. Rail Plate Wear Latch	2	$	27.10
012627	Replacement Latch Flipper	1	$	50.10
012628	Replacement Latch Pin and Lanyard	1	$	11.75
012679	Replacement 1/4"x29" Hydraulic Hose w/ Adapters (Mini & 48)	1	$	45.15
012680	Replacement 1/4"x37" Hydraulic Hose w/ Adapters (54, 60-1340 & 650)	1	$	45.15
012681	Replacement 1/4"x40" Hydraulic Hose w/ Adapters (T-100 & 60)	1	$	45.15
012682	Replacement 1/4"x44" Hydraulic Hose w/ Adapters (64)	1	$	47.20
012683	Replacement 1/4"x48" Hydraulic Hose w/ Adapters (72P/72S & 650)	1	$	47.20
012684	Replacement 1/4"x56" Hydraulic Hose w/ Adapters (80-1046)	1	$	47.20
012685	Replacement 1/4"x62" Hydraulic Hose w/ Adapters (86-1046)	1	$	49.30
012686	Replacement 1/4"x68" Hydraulic Hose w/ Adapters (91-1046)	1	$	49.30
012749	Replacement Flow Control (7/16 M x 7/16 F x 0.078) w/ Adapters for (1/4 M x 1/4	1	$	51.40
012910	Replacement 50" x 80" Steel Platform	1	$	1,880.00
012911	Replacement 60" x 80" Steel Platform	1	$	2,048.00
012912	Platform Link Kit	1	$	370.00
012913	Replacement Upper Arm w/Pins & Keepers (Left)	1	$	484.00
012914	Replacement Upper Arm w/Pins & Keepers (Right)	1	$	484.00
012915	Replacement 1-1/4" Lift Arm Pivot Pin w/ Keeper	2	$	48.60
012916	Replacement Power Unit Cover	1	$	106.00
012917	Replacement Platform Coil Springs	1	$	223.00
012918	Replacement 1-1/4" Frame Pin w/ Keepers	6	$	66.90
012919	Replacement 2 Ga. Copper Lug	6	$	4.15
012920	Replacement Upper Arm Tube Assembly	1	$	315.00
012921	Replacement Pump & Motor 3qt.** 2500/3000# Tuckunder	1	$	858.00
012922	Replacement Aluminum 25" Folding Extension with Cart Stop	1	$	1,959.00
012923	Replacement Lift Cylinder	2	$	567.00
012924	Replacement Lift Arm w/Pins & Keepers (Left)	1	$	377.00
012925	Replacement Lift Arm w/Pins & Keepers (Right)	1	$	377.00
012926	Replacement Tuckunder Latch Handle	1	$	37.05
012927	Replacement Hydraulic Hose-Lift Cylinder Long (Left)	1	$	77.75
012928	Replacement Hydraulic Hose-Lift Cylinder Short (Left)	1	$	75.25
012929	Replacement Hydraulic Hose-Lift Cylinder Long (Right)	1	$	51.85
012930	Replacement Lower Arm Link	1	$	167.00
012931	Replacement Hydraulic Hose-Pump/Lift Cylinder Short (Right)	5	$	44.95
012932	Replacement Tuckunder Circuit Board	1	$	202.00
012933	Replacement Plastic Tank (3qt.)	1	$	62.35
012934	Replacement 1-1/4" Lift Arm Pin w/Keeper	4	$	40.10
012935	Lift Cylinder Seal Repair Kit	2	$	120.00
012936	Lift Cylinder Shaft Repair Kit	2	$	615.00
012937	Replacement Latch Chain	1	$	25.05

012938	Replacement Roller Arm	1	$	116.50
012939	Replacement Aluminum 25" Folding Extension	1	$	1,457.00
012940	Replacement Aluminum 30" Folding Extension	1	$	1,723.00
012941	Replacement Roller Arm Wheel Kit	1	$	26.80
012942	Replacement 94" Standard Bed Extension	1	$	907.00
012943	Replacement 94" Heavy Bed Extension	1	$	1,077.00
012944	Replacement 100" Standard Bed Extension	1	$	1,032.00
012945	Replacement 100" Heavy Bed Extension	1	$	1,201.00
012946	Replacement Bed Extension Brace	2	$	55.80
012947	Replacement Aluminum 30" Folding Extension with Cart Stop	1	$	2,225.00
012948	Replacement Bed Extension Step	2	$	49.50
012950	Replacement Platform Shim Kit	1	$	17.10
012952	Replacement Dock Bumper	2	$	75.20
012953	Replacement Flipper Torsion Spring Kit (50" Steel)	1	$	33.65
012954	Replacement Flipper Torsion Spring Kit (60" Steel)	1	$	95.85
012955	Replacement Snubber Kit	1	$	89.05
012959	Replacement 1/4"x44" Hydraulic Hose w/ Adapters (64-1346-1646SB)	1	$	47.20
012960	Replacement 1/4"x48" Hydraulic Hose w/ Adapters (72-1348-1650)	1	$	47.20
012961	Replacement 1/4"x56" Hydraulic Hose w/ Adapters (80-1348-1650)	1	$	47.20
012962	Replacement 1/4"x62" Hydraulic Hose w/ Adapters (86-1348-1650)	1	$	49.30
012963	Replacement 1/4"x68" Hydraulic Hose w/ Adapters (91-1348-1650)	1	$	49.30
012966	Replacement Flow Control Complete (9/16" M x 7/16" F x 0.078") w/ Adapters for	1	$	51.40
013073	Replacement 90 Degree Elbow (Male 7/16 ORB x Female 7/16 ORB)	1	$	10.55
013091	TA (89)35+12 Replacement EA Platform	1	$	2,764.00
013092	TA (89)35+12 Replacement EA Platform w/Cart Stop	1	$	3,265.00
013093	TA (89)35+12 Replacement EA Platform w/Bolt On Taper	1	$	2,883.00
013094	TA (89)35+12 Replacement EA Platform w/Cart Stop and Bolt On Taper	1	$	3,384.00
013095	SC (89)35+12 Replacement EA Platform	1	$	2,764.00
013096	SC (89)35+12 Replacement EA Platform w/Cart Stop	1	$	3,265.00
013097	SC (89)35+12 Replacement EA Platform w/Bolt On Taper	1	$	2,883.00
013098	SC (89)35+12 Replacement EA Platform w/Cart Stop and Bolt On Taper	1	$	3,384.00
013099	TA (89)55+12 Replacement EA Platform	1	$	3,184.00
013100	TA (89)55+12 Replacement EA Platform w/Cart Stop	1	$	3,685.00
013101	TA (89)55+12 Replacement EA Platform w/Bolt On Taper	1	$	3,303.00
013102	TA (89)55+12 Replacement EA Platform w/Cart Stop and Bolt On Taper	1	$	3,804.00
013103	Replacement Box Cover (89)TX w/Alarm & Lights(TA) (SPEC GATE ONLY)	1	$	666.00
013108	Rail(AB) Replacement Platform Chain (37+1 Links) (TX)	2	$	80.30
013109	47" Replacement TA Slider w/Rollers-Left(TX)	1	$	549.00
013110	47" Replacement TA Slider w/Rollers-Right(TX)	1	$	549.00
013111	47" Replacement Self Close Slider w/Rollers-Left(TX)	1	$	549.00
013182	Replacement Rear Cover Chevy	1	$	88.95
013265	Replacement 1350 G2 Pump & Motor Unit (2300psi)	1	$	522.00
013267	Replacement Auxiliary Hand Pump & Motor 2600psi	1	$	627.00
013268	M319 Replacement Pump & Motor (2100psi) 3qt. 3-Post	1	$	522.00
013269	M319 Replacement Pump & Motor (2100psi) 3qt. 4-Post	1	$	522.00
013357	Platform Hold Down Kit	1	$	262.00
013360	Replacement Flow Control W/ O-ring (G2) (With Adaptor)	2	$	43.00
013370	Replacement Leaf Chain 327 Pitch - Driver's Side (AB)	1	$	745.00
013384	Repair Up Stop Push off Assembly (Cantilever)	1	$	57.40
013553	47" Replacement Self Close Slider w/Rollers-Right(TX)	1	$	549.00
013554	Replacement LED License Plate Light	1	$	26.80
013555	Replacement Box Cover (89)TX w/Lights(TA) (SPEC GATE ONLY)	1	$	589.00
013556	Replacement Self Close Box Cover (89)TX w/Alarm & Lights	1	$	666.00
013557	Replacement Self Close Box Cover (89)TX w/Lights	1	$	589.00

013558	Replacement Raise Solenoid-4 Post	1	$	58.45
013559	Replacement Compact Fixed Control	1	$	223.00
013560	Replacement 2 Ga. Single Wire Cables w/Lugs-35 ft. Red/30 ft. Black	1	$	262.00
013561	Replacement Bearing Pad Set W/ Rollers (TX)	2	$	214.00
013562	295 Pitch Replacement Roller Chain Above Bed Pass. Side(TX)	1	$	241.00
013563	Replacement Alum. Roller Chain Cover(TX)	2	$	27.25
013564	Replacement Alum AB Sprocket Assembly-R(TX)	1	$	61.10
013566	Repair Cartstop Torsion Spring Kit (in taper)	1	$	41.70
013568	Replacement Left Cartstop Assembly (73) w/Spring (in taper)	1	$	162.00
013569	Replacement Left Cartstop Assembly (79) w/Spring (in taper)	1	$	165.00
013570	Replacement Left Cartstop Assembly (85) w/Spring (in taper)	1	$	167.00
013571	Replacement Left Cartstop Assembly (89) w/Spring (in taper)	1	$	169.00
013572	Replacement Left Cartstop Assembly (95) w/Spring (in taper)	1	$	174.00
013573	Replacement Right Cartstop Assembly (73) w/Spring (in taper)	1	$	162.00
013574	Replacement Right Cartstop Assembly (79) w/Spring (in taper)	1	$	165.00
013575	Replacement Right Cartstop Assembly (85) w/Spring (in taper)	1	$	167.00
013576	Replacement Right Cartstop Assembly (89) w/Spring (in taper)	1	$	169.00
013577	Replacement Right Cartstop Assembly (95) w/Spring (in taper)	1	$	174.00
013599	Replacement Latch Flipper Wear Plate	1	$	18.55
013627	(92) G2 33+6" Bargrate Replacement Platform	1	$	1,015.00
013632	60-50 G2 Replacement Sub Assembly	1	$	360.00
013633	60-50 G2 Replacement Upper Arm Assembly	1	$	540.00
013638	Replacement Alum AB Sprocket Assembly-L(TX)	1	$	61.10
013639	Replacement Alum Platform Self Close Arm Kit (TX)	1	$	88.35
013640	(TX)Replacement Self-Close Safety Trip Bar-81-1/4"	1	$	81.60
013641	(TX)Replacement Safety Trip Bar-83-1/4"(TA) (SPEC GATE ONLY)	1	$	81.60
013642	Replacement Platform Stop Block Kit (TX)	1	$	20.70
013643	(89) 12" Rep EA Bolt On Taper w/CS (TX)	1	$	946.00
013644	(89) 12" Rep EA Bolt On Taper (TX)	1	$	445.00
013645	1/2"SQ. Torsion Spring Kit Self Close(TX)	1	$	273.00
013646	5/8"SQ. Torsion Spring Kit (TX)	1	$	273.00
013647	(89) Dual Torsion Spring Kit (TX)	1	$	273.00
013649	35+6TP, 33+6TT, & 33+6BG Platform Replacement Chain	2	$	50.70
013650	Replacement 48" EA Platform Chain	2	$	52.85
013651	41+6TP Replacement Platform Chain	2	$	62.50
013661	Replacement Cantilever Nissan NV Bridge	1	$	336.00
013662	Replacement Box Cover (60G2)	1	$	87.10
013666	Replacement Rear Cover Nissan	1	$	88.95
013708	License Plate Bracket with Light	1	$	63.00
013744	Replacement Steel Box Cover w/Lights (73)(N) LED	1	$	452.00
013745	Replacement Steel Box Cover w/Lights (79)(N) LED	1	$	461.00
013746	Replacement Steel Box Cover w/Lights (85)(N) LED	1	$	483.00
013747	Replacement Steel Box Cover w/Lights (89)(N) LED	1	$	519.40
013748	Replacement Steel Box Cover w/Lights (95)(N) LED	1	$	546.00
013805	74 Replacement Sub Assembly	1	$	308.00
013822	TA (85)35+12 Replacement EA Platform w/Bolt On Taper	1	$	2,839.00
013823	Replacement Self Close Latch Flipper	1	$	13.30
013824	Replacement Self Close Box Cover (85) w/Alarm	1	$	647.00
013825	Replacement PS Self Close Latch (TX)	1	$	134.00
013826	329 Pitch Replacement Roller Chain (85TX)	1	$	267.00
013827	Replacement Safety Trip Bar-79-1/4" (85)	1	$	81.60
013838	5/8"SQ. Torsion Spring Kit (85)	1	$	273.00
013839	(85) 12" Rep EA Bolt On Taper W/CS (TX)	1	$	946.00
013929	(87) G2 33+6" Bargrate Replacement Platform	1	$	1,001.00

013930	Replacement 50" x 80" Aluminum Platform with Cart Stop	1	$	3,556.00
013931	Replacement 60" x 80" Aluminum Platform with Cart Stop	1	$	4,018.00
013932	Replacement 50" x 80" Aluminum Platform	1	$	3,055.00
013933	Replacement 60" x 80" Aluminum Platform	1	$	3,517.00
014041	Replacement Passive Latch	1	$	52.10
014042	Replacement License Plate Light	1	$	31.00
014043	(74) 37" Replacement Extruded Aluminum Platform	1	$	1,368.00
014106	Replacement Cantilever Pump Box (18-13/16")	1	$	131.00
014107	Replacement Cantilever Pump Box (18-13/16") Cover Transit	1	$	46.90
014108	Replacement 1330 Cantilever Pump & Motor Unit (2750psi) (18-13/16" Pump Box	1	$	1,053.00
014114	Cantilever Replacement Tension Arm w/Pins & Keepers (Left) Transit	1	$	242.00
014115	Replacement Cantilever License Plate Bracket (Sprinter) Side Plate Mount	1	$	59.70
014116	Replacement Cantilever Stabilizer Tube (Transit)	1	$	61.20
014117	Cantilever Replacement Tension Arm w/Pins & Keepers (Right) Transit	1	$	242.00
014194	Replacement 60" EA Flipper Torsion Spring Kit(TKT)	1	$	64.40
014219	(92) G2 33+6" Tommy Traction Replacement Platform	1	$	917.00
014257	Replacement STT W/Backup LED Light W/Grommet (12VDC)	2	$	64.90
014258	Replacement STT Red Light W/Grommet (12VDC)	2	$	64.90
014268	G2 Low Profile Replacement Latch Kit (Model 73-92 & EA65)	2	$	34.25
014327	Replacement Left Cart Stop	1	$	174.00
014328	Replacement Right Cart Stop	1	$	174.00
014335	Replacement 30" EA Main Platform	1	$	2,405.00
014336	Replacement 25" EA Main Platform	1	$	2,176.00
014337	Replacement Treadplate 25" Folding Extension	1	$	689.00
014338	Replacement Treadplate 30" Folding Extension	1	$	846.00
014339	Replacement 25" Treadplate Main Platform	1	$	1,068.00
014340	Replacement 30" Treadplate Main Platform	1	$	1,163.00
014348	Replacement Power Unit Cover Seal	1	$	10.90
014349	Replacement Power Unit Cover Latch	1	$	8.40
014436	Replacement Chain-up Feature	1	$	26.65
014520	Replacement 650 Pump Box (only) Gate Mount	1	$	38.35
014530	Replacement Rail Chain Cover AB	2	$	20.50
014538	EA Driver's Side Latch Kit (swing away)(74)	1	$	36.60
014539	EA Passenger's Side Latch Kit (74)	1	$	20.50
014540	Replacement Primary Cart Stop	1	$	125.00
014541	Replacement Secondary Cart Stop	1	$	125.00
014542	Removable Cart Stop Torsion Spring Kit (in taper)	2	$	29.40
014543	Removable Cart Stop Replacement Hinge Kit (in taper)	2	$	30.95
014544	Replacement Rail Cart Stop Latch Kit (in taper)	2	$	19.90
014584	Replacement Box Cover (74)	1	$	45.55
014598	Replacement Cantilever Ford Transit Bridge	1	$	336.00
014599	Replacement Rear Cover Ford Transit	1	$	88.95
014605	Replacement 24V Pump & Motor 3qt.** 2500/3000# Tuckunder	1	$	980.00
014612	(87) G2 33+6" Tommy Traction Replacement Platform	1	$	900.00
014674	Replacement Limit Switch Wire Harness(Cantilever)	1	$	45.80
014675	Replacement Toggle Switch Wire Harness (Cantilever)	1	$	55.80
014678	Replacement 50" EA Platform Support Kit(TKT)	1	$	347.00
014679	Replacement 60" EA Platform Support Kit(TKT)	1	$	347.00

Tommy Gate Distributor Liftgate Parts Price List
Woodbine Manufacturing Company
Effective June 1, 2016
1.800.LIFTGATE

Part #	Description	Qty Required	Retail Per
000889	Replacement Clear LED Light w/Grommet	2	$ 54.55
000904	Replacement Red LED Light w/Grommet	4	$ 54.55
000913	Replacement 1/2"Dia.x1" Cotterless Hitch Pin	1	$ 7.15
000914	Rail Pin & Padlock w/Keys	1	$ 15.95
000916	Replacement 1/4"x7/16"x90 Degree Steel Cylinder Elbow	1	$ 10.55
000917	Replacement 3/8"x9/16"x90 degree Cylinder Elbow	1	$ 10.55
000918	Replacement Bottle Rack Chain - 3/16" Zinc x 75 Link	2	$ 30.60
000919	Replacement Gas Bottle Rack Lynch Pin	2	$ 4.55
000920	Replacement Steel Platform Triangle Deadman	2	$ 4.15
000921	Replacement Aluminum Platform Triangle Deadman	2	$ 6.25
000922	Replacement 0.142"x1.125"x5.5" Extension Spring (Rail)	2	$ 9.10
000925	Replacement Steel Latch Plate-Left	1	$ 71.20
000926	Replacement Clear Light w/Grommet (after serial # M16-2387R and M20-5786)	2	$ 24.50
000927	Replacement Clear Light w/Grommet (before serial # M16-23388R and M20-5787)	1	$ 24.50
000928	Replacement Red Light w/Grommet (after serial # M16-2387R and M20-5786)	4	$ 24.50
000929	Replacement Red Light w/Grommet (before serial # M16-23388R and M20-5787)	4	$ 24.50
000930	Replacement Rail Safety Switch	2	$ 41.95
000931	Replacement Rail Latch Spring	1	$ 6.25
000932	Replacement (91) Grip Tape Kit For Platform	1	$ 71.45
000934	Replacement 3/8"x3/8"x90 Degree Cylinder Elbow	1	$ 6.25
000944	Replacement 90 Degree Elbow (Male 9/16 O-ring Boss x Female 1/4 NPTF)	1	$ 15.40
000945	Replacement 90 Degree Elbow (Male 3/8 NPTF x Female 1/4 NPTF)	1	$ 6.25
000949	Replacement Original Series License Plate Light	2	$ 6.25
000951	Replacement 3/4"x1-1/2" Arm Pin (after serial # M-83393)	10	$ 6.25
000952	Replacement 7/8" Arm Pin (after serial # M-82340-1000#&1300#)	10	$ 6.25
000954	Replacement Latch Spring	1	$ 4.15
000955	Replacement Latch Knob w/Stud	2	$ 6.25
000956	Replacement (64) Grip Tape Kit For Platform	1	$ 71.45
000957	Replacement 1.5qt. Monarch Plastic Tank (G2)	1	$ 62.25
000958	Replacement 12 Volt Motor-Only (Monarch)	1	$ 298.00
000959	Replacement Flow Control (G2)	2	$ 43.00
000960	G2 54-F11+4 Replacement Treadplate Flipper	1	$ 255.00
000961	G2 54-F11+7 Replacement Treadplate Flipper	1	$ 316.00
000962	G2 60-F11+4 Replacement Treadplate Flipper	1	$ 260.00
000963	G2 60-F11+7 Replacement Treadplate Flipper	1	$ 340.00
000966	Replacement Padlock w/Keys	1	$ 9.65
000967	Replacement Raise Solenoid-3 Post	1	$ 58.45
000968	Replacement 1340 G2 Pump & Motor Unit (2050psi)	1	$ 522.00
000969	Replacement 1540 G2 Pump & Motor Unit (2350psi)	1	$ 522.00
000970	Replacement 1640 G2 Pump & Motor Unit (2500psi)	1	$ 522.00
000971	Replacement G2 Cylinder	2	$ 350.00
000972	Replacement Split Plastic Grommet Kit	2	$ 4.15
000973	Replacement Monarch Lee Check Valve (after serial # M-335705 1000# & 1300#)	1	$ 29.95
000974	Replacement G2 T-Fitting (Pump & Motor)	1	$ 23.50
000975	Replacement 1/4"X21" Hydraulic Hose-Left (G2)	1	$ 29.70
000976	Replacement 1/4"x52" Hydraulic Hose-Right (54 & 60 G2)	1	$ 43.75
000977	Replacement 1/4"x56.63" Hydraulic Hose-Right (64 G2)	1	$ 48.85
000978	Replacement 1/4"x1/4"x90 Degree Steel Cylinder Elbow	2	$ 6.25
000979	Replacement Vent Plug - Cylinder (Rail & G2)	2	$ 4.15
000983	Replacement Toggle Switch Only	2	$ 20.50
000987	Replacement Fixed Control	1	$ 129.00
000988	Replacement Lower Pivot Bushing	1	$ 8.20
000989	Replacement Vent Plug	1	$ 4.15
000992	Replacement Copper Lug	6	$ 4.15
000993	Replacement 650 Pendant Control	1	$ 146.00
000994	Replacement 90 degree Elbow w/ Adapters (650)	1	$ 17.10
000995	Replacement Solenoid - 4 Post (650)	1	$ 58.45
000997	Replacement 650 Flow Control w/ Adapters	1	$ 51.40
000998	Replacement 150 Amp Manual Reset Circuit Breaker	1	$ 61.10
001010	G2 Replacement Drop Away Pin Assembly	1	$ 6.25
001070	Driver's Side Latch Kit (swing away)	1	$ 34.65
001071	Passenger's Side Latch Kit (fixed)	1	$ 20.50

001083	Replacement Pin & Chain Only (LND)	2	$	5.20
001087	LD Latch Kit	2	$	15.75
001107	Driver's Side Latch Kit EA (swing away)	1	$	36.60
001110	2" Cylinder Repair Kit (after serial # M16-16166R and M20-3192)	1	$	158.00
001111	License Plate Mount Kit	1	$	4.15
001125	1040-1340 Replacement Lift Arm w/Pins & Zerks	4	$	50.05
001126	1046-1650 Replacement Lift Arm w/Pins & Zerks	4	$	48.80
001138	G2 Cylinder Repair Kit (after serial # 470166M)	2	$	92.35
001139	1-1/2" Cylinder Repair Kit (54-1040 & 60-1040 before serial # 459225M*, all 1034, all 1036) Includes: Piston, Guide Bushing & O-rings	1	$	34.65
001140	1-3/4" Cylinder Repair Kit (54-1040 & 60-1040 after serial # 462473M*, all 1046, all 1340) Includes: Piston, Guide Bushing & O-rings	1	$	39.95
001141	2" Cylinder Repair Kit (1346-1650) Includes: Piston, Guide Bushing & O-rings	1	$	68.65
001211	Replacement G2 Cylinder Shaft Complete (40) (after serial # 470166M)	2	$	259.00
001220	27" TP Hinge Tube Spring Holders (no spring)	1	$	50.25
001224	(91) 42" Extruded Aluminum Replacement Platform	1	$	1,931.00
001227	72P w/F11 Treadplate Replacement Platform	1	$	552.00
001261	(85) SC 37+6 Replacement Steel Platform	1	$	834.00
001262	(89) SC 37+6 Replacement Steel Platform	1	$	848.00
001263	(85) SC 42+6 Replacement Steel Platform	1	$	1,051.00
001264	(89) SC 42+6 Replacement Steel Platform	1	$	1,064.00
001267	(85) SC 60+12 Replacement Aluminum Platform	1	$	3,072.00
001268	(89) SC 60+12 Replacement Aluminum Platform	1	$	3,109.00
001286	(85) TA 30+12 Replacement SGBR w/Rack	1	$	1,308.00
001287	(89) TA 30+12 Replacement SGBR w/Rack	1	$	1,327.00
001383	Replacement Cylinder Tube (650)	1	$	186.00
001385	2"x37.25" Replacement Hinge Tube w/Bushings (650)	1	$	230.00
001396	Replacement Cylinder Shaft w/End Lugs Includes: Guide Bushing & O-ring Kit	1	$	235.00
001400	650 Replacement Platform	1	$	434.00
001403	650 Self Close Tube Kit	1	$	61.65
001437	650 Pin Kit (Lower Cylinder)	1	$	21.20
001438	650 Pin Kit (Upper Cylinder)	1	$	21.20
001495	650 Motor (only)	1	$	357.00
001627	Mini w/F9 EA Replacement Platform	1	$	963.00
001628	Dakota w/F9 EA Replacement Platform	1	$	1,009.00
001629	60 Toyota w/F9 EA Replacement Platform	1	$	1,072.00
001630	48 w/F11 EA Replacement Platform	1	$	798.00
001631	54 38" EA Replacement Platform	1	$	862.00
001632	60 38" EA Replacement Platform	1	$	900.00
001633	64/65 38" EA Replacement Platform	1	$	941.00
001638	64SB EA Replacement Platform	1	$	1,156.00
001639	72 EA Replacement Platform	1	$	1,327.00
001640	80 EA Replacement Platform	1	$	1,478.00
001641	86 EA Replacement Platform	1	$	1,533.00
001642	91 EA Replacement Platform	1	$	1,581.00
001643	Mini Treadplate Replacement Platform	1	$	449.00
001644	Dakota & Isuzu Treadplate Replacement Platform	1	$	472.00
001645	60 Toyota Treadplate Replacement Platform	1	$	503.00
001646	48-1036 Treadplate Replacement Platform	1	$	238.00
001647	48-1036 w/F11 Treadplate Replacement Platform	1	$	441.00
001648	64 Treadplate Replacement Platform	1	$	290.00
001649	64 w/F11 Treadplate Replacement Platform	1	$	494.00
001650	54-1040 & 54-1340 Treadplate Replacement Platform	1	$	252.00
001651	54-1040 & 54-1340 w/F11 Treadplate Replacement Platform	1	$	458.00
001654	60-1040 & 60-1340 Treadplate Replacement Platform	1	$	276.00
001655	60-1040 & 60-1340 Treadplate w/F11 Replacement Platform	1	$	480.00
001658	64-1340 Treadplate Replacement Platform	1	$	308.00
001659	64-1340 w/F11 Treadplate Replacement Platform	1	$	514.00
001660	(64SB) 36" Treadplate Replacement Platform	1	$	615.00
001661	(72) 36" Treadplate Replacement Platform	1	$	675.00
001662	(80) 36" Treadplate Replacement Platform	1	$	731.00
001663	(86) 36" Treadplate Replacement Platform	1	$	753.00
001664	(91) 36" Treadplate Replacement Platform	1	$	766.00
001678	48-F11 Treadplate Flipper Boxed	1	$	255.00
001679	54-F11 Treadplate Flipper Boxed	1	$	255.00
001680	60-F11 Treadplate Flipper Boxed	1	$	255.00
001681	64-F11 Treadplate Flipper Boxed	1	$	255.00
001700	(95) SC 37+6 Replacement Steel Platform	1	$	861.00
001701	(95) SC 42+6 Replacement Steel Platform	1	$	1,077.00
001703	(95) SC 60+12 Replacement Aluminum Platform	1	$	3,221.00

001718	(73) SC 37+6 Replacement Steel Platform	1	$	815.00
001719	(79) SC 37+6 Replacement Steel Platform	1	$	823.00
001720	(85) SC 55+12 Replacement Aluminum Platform	1	$	2,918.00
001723	(73) SC 42+6 Replacement Steel Platform	1	$	1,030.00
001724	(79) SC 42+6 Replacement Steel Platform	1	$	1,040.00
001727	(73) SC 60+12 Replacement Aluminum Platform	1	$	2,929.00
001728	(79) SC 60+12 Replacement Aluminum Platform	1	$	2,997.00
001740	(73) TA 30+12 Replacement SGBR w/Rack	1	$	1,289.00
001741	(79) TA 30+12 Replacement SGBR w/Rack	1	$	1,299.00
001742	(95) TA 30+12 Replacement SGBR w/Rack	1	$	1,348.00
001774	72P-F11 Treadplate Flipper Boxed	1	$	255.00
001782	(64SB) 36" Treadplate Replacement Platform	1	$	615.00
001783	(64SB) 42" Treadplate Replacement Platform	1	$	944.00
001784	(72) 36" Treadplate Replacement Platform	1	$	675.00
001785	(72) 42" Treadplate Replacement Platform	1	$	1,004.00
001786	(80) 36" Treadplate Replacement Platform	1	$	731.00
001787	(80) 42" Treadplate Replacement Platform	1	$	1,060.00
001788	(86) 36" Treadplate Replacement Platform	1	$	753.00
001789	(86) 42" Treadplate Replacement Platform	1	$	1,082.00
001790	(91) 36" Treadplate Replacement Platform	1	$	766.00
001791	(91) 42" Treadplate Replacement Platform	1	$	1,095.00
001792	Mini-F7 Treadplate Flipper Boxed	1	$	255.00
001793	Dakota & Isuzu-F7 Treadplate Flipper Boxed	1	$	255.00
001794	T-100-F7 Treadplate Flipper Boxed	1	$	255.00
001796	Mini-F9 Replacement EA Flipper	1	$	361.00
001797	Dakota & Isuzu F9 Replacement EA Flipper	1	$	361.00
001798	60 Toyota F9 Replacement EA Flipper	1	$	361.00
001880	48-F11 Replacement EA Flipper	1	$	361.00
001881	54-F11 Replacement EA Flipper	1	$	388.00
001882	60-F11 Replacement EA Flipper	1	$	402.00
001883	64/65-F11 Replacement EA Flipper	1	$	447.00
001977	Railgate Replacement Latch Lever	1	$	46.00
001992	1/2"SQ. Torsion Spring Kit (79Rail)	1	$	273.00
001993	5/8"SQ. Torsion Spring Kit (79Rail)	1	$	273.00
001994	3/4"SQ. Torsion Spring Kit (79Rail)	1	$	273.00
001995	1/2"SQ. Torsion Spring Kit (85Rail)	1	$	273.00
001996	5/8"SQ. Torsion Spring Kit (85Rail)	1	$	273.00
001997	3/4"SQ. Torsion Spring Kit (85Rail)	1	$	273.00
001998	1/2"SQ. Torsion Spring Kit (89Rail)	1	$	273.00
001999	5/8"SQ. Torsion Spring Kit (89Rail)	1	$	273.00
002000	3/4"SQ. Torsion Spring Kit (89Rail)	1	$	273.00
002005	Aluminum Railgate Replacement Latch Lever	1	$	46.95
002006	All Aluminum Railgate Replacement Latch Plate-Right	1	$	151.00
002007	All Aluminum Railgate Replacement Latch Plate-Left	1	$	88.15
002015	Replacement G2 Upright Cap	2	$	10.15
002017	G2 Replacement Latch Kit	2	$	34.25
002020	Replacement Platform Latch Pin Assembly (G2)	2	$	8.95
002033	Replacement Steel Latch Plate-Right	1	$	134.00
002034	5/8"SQ. Torsion Spring Kit (95Rail)	1	$	273.00
002040	54-40 G2 Replacement Upper Arm Assembly	1	$	511.00
002041	60-40 G2 Replacement Upper Arm Assembly	1	$	539.00
002042	64-40 G2 Replacement Upper Arm Assembly	1	$	563.00
002044	54-40 G2 Replacement Sub Assembly	1	$	309.00
002045	60-40 G2 Replacement Sub Assembly	1	$	319.00
002046	64-40 G2 Replacement Sub Assembly	1	$	325.00
002054	5/8"SQ. Torsion Spring Kit (73Rail)	1	$	273.00
002087	3/4"SQ. Torsion Spring Kit (95Rail)	1	$	273.00
002143	Replacement G2 Sub Assembly Belting	2	$	16.40
002180	7/8" Replacement G2 Upright Back Cylinder Pin	2	$	33.30
002181	3/4" Replacement G2 Upright Back Arm Pin & Bushing	2	$	36.35
002182	G2 Replacement Clevis Cylinder Assembly	2	$	51.85
002183	3/4" Replacement G2 Upright Front Arm Pin	4	$	33.45
002202	5/8"SQ. Torsion Spring Kit (A89Rail)	1	$	273.00
002203	Replacement Flipper Stop (650-31)	1	$	10.15
002204	Replacement Platform Wear Bushing Kit	1	$	10.15
002205	Replacement 650 Platform Latch	1	$	19.40
002206	Replacement 650 Support Tube Assembly	1	$	276.00
002207	650 Pin Kit (Lower 4x4 Lift Tube)	1	$	21.20

002208	650 Pin Kit (Lower S-Arm)	1	$	21.20
002209	Replacement 650 Main Lift Tube (4x4x26.12)	1	$	176.00
002210	650 Pin Kit (Upper 3x3 Lift Tube)	1	$	21.20
002211	650 Latch & Self Close Bushing Kit	2	$	6.25
002212	Replacement Vertical Lift Tube (3x3x30.68)	1	$	230.00
002224	1/2"SQ. Torsion Spring Kit (95Rail)	1	$	273.00
002324	Replacement Horizontal Tube Assembly (BR)	2	$	123.00
002325	Replacement Bottle Rack Fence-Left	1	$	195.00
002326	Replacement Bottle Rack Taper (79)	1	$	91.50
002327	Replacement Bottle Rack Taper (85)	1	$	105.00
002328	Replacement Bottle Rack Taper (89)	1	$	113.00
002329	Replacement Bottle Rack Fence-Right	1	$	195.00
002330	Replacement Pivot Plate (BR)	2	$	31.35
002331	Replacement Pivot Pin w/Snap Ring (BR)	4	$	15.95
002332	Replacement Bottle Rack Taper (95)	1	$	124.00
002333	Replacement Bottle Rack Taper (73)	1	$	84.75
002480	Torsion Assist Spring Kit (650)	1	$	46.00
002481	Replacement Guide Bushing & O-ring Kit (650)	1	$	76.80
002482	650 Pivot Latch Kit (Black Knob)	1	$	19.40
002508	(64SB) 42" Extruded Aluminum Replacement Platform	1	$	1,508.00
002509	(80) 42" Extruded Aluminum Replacement Platform	1	$	1,827.00
002510	Replacement Rail Platform Stop (TA)	2	$	40.90
002513	(86) 42" Extruded Aluminum Replacement Platform	1	$	1,883.00
002514	Retro 72 LND Replacement Platform & Sub Assembly Kit	1	$	1,259.00
002515	Retro 80 LND Replacement Platform & Sub Assembly Kit	1	$	1,281.00
002516	Retro 86 LND Replacement Platform & Sub Assembly Kit	1	$	1,380.00
002517	Retro 91 LND Replacement Platform & Sub Assembly Kit	1	$	1,393.00
002520	72P/72S-F11 Replacement EA Flipper	1	$	501.00
002523	(81) G2 35" Treadplate Replacement Platform	1	$	731.00
002524	(81) G2 41" Treadplate Replacement Platform	1	$	1,060.00
002525	(81) G2 37" Extruded Aluminum Replacement Platform	1	$	1,478.00
002526	(81) G2 41" Extruded Aluminum Replacement Platform	1	$	1,827.00
002527	(87) G2 35" Treadplate Replacement Platform	1	$	753.00
002528	(87) G2 41" Treadplate Replacement Platform	1	$	1,082.00
002529	(87) G2 37" Extruded Aluminum Replacement Platform	1	$	1,533.00
002530	(87) G2 41" Extruded Aluminum Replacement Platform	1	$	1,883.00
002531	(92) G2 35" Treadplate Replacement Platform	1	$	766.00
002532	(92) G2 41" Treadplate Replacement Platform	1	$	1,095.00
002533	(92) G2 37" Extruded Aluminum Replacement Platform	1	$	1,581.00
002534	(92) G2 41" Extruded Aluminum Replacement Platform	1	$	1,931.00
002535	73-50 G2 Replacement Sub Assembly	1	$	430.00
002536	81-50 G2 Replacement Sub Assembly	1	$	447.00
002537	87-50 G2 Replacement Sub Assembly	1	$	463.00
002538	92-50 G2 Replacement Sub Assembly	1	$	477.00
002539	G2 (50) Replacement Lower Arm w/Pins & Bushings	2	$	120.00
002540	G2 (50) Replacement Clevis Cylinder Assembly	2	$	53.75
002541	73-50 G2 Replacement Upper Arm Assembly	1	$	622.00
002542	81-50 G2 Replacement Upper Arm Assembly	1	$	676.00
002543	87-50 G2 Replacement Upper Arm Assembly	1	$	713.00
002544	92-50 G2 Replacement Upper Arm Assembly	1	$	743.00
002549	Replacement Box Cover (73G2)	1	$	91.70
002551	Replacement Box Cover (81G2)	1	$	95.75
002553	Replacement Box Cover (87G2)	1	$	97.80
002555	Replacement Box Cover (92G2)	1	$	101.00
002558	Replacement 1650 G2 Pump & Motor Unit (2500psi)	1	$	522.00
002559	Replacement G2 Cylinder (50)	2	$	519.00
002560	Replacement G2 Sub Assembly Belting (50)	2	$	22.75
002561	Replacement G2 Cylinder Shaft Complete (50)	2	$	281.00
002578	Replacement 1/4"X26-1/4" Hydraulic Hose-Left (G2)	1	$	34.80
002579	Replacement 1/4"x66-3/4" Hydraulic Hose-Right (65-73G2)	1	$	53.90
002580	Replacement 1/4"x80-3/4" Hydraulic Hose-Right (81-87G2)	1	$	55.65
002581	Replacement 1/4"x85-3/4" Hydraulic Hose-Right (92G2)	1	$	56.70
002583	G2 (50) Replacement Latch Kit-Left	1	$	34.95
002584	G2 (50) Replacement Latch Kit-Right	1	$	34.95
002585	(73) G2 35" Treadplate Replacement Platform	1	$	675.00
002590	(73) G2 41" Treadplate Replacement Platform	1	$	1,004.00
002591	(73) G2 37" Extruded Aluminum Replacement Platform	1	$	1,327.00
002599	(73) G2 41" Extruded Aluminum Replacement Platform	1	$	1,676.00

002646	(72) 42" Extruded Aluminum Replacement Platform	1	$	1,676.00
002722	Replacement Flipper Arm Self-Closing Rod	1	$	26.40
002723	Replacement Pivot Pin Sleeve (650)	1	$	65.95
002724	Replacement 650 Lift Arm	1	$	193.00
002725	Replacement 650 Cylinder	1	$	608.00
002726	M259 Replacement Pump & Motor Unit (1.5L) (1550psi)	1	$	522.00
002727	Replacement 650 Release Solenoid External Assembly w/Connector	1	$	105.00
002728	650 Replacement Tank	1	$	123.00
002863	Rail (R-Fold 30" Base) Replacement Platform Chain	2	$	59.10
002864	Rail (R-Fold 35" Base) Replacement Platform Chain	2	$	63.65
002867	Replacement Steel R-fold Latch Plate-Right	1	$	165.00
002868	Replacement Steel R-fold Latch Plate-Left	1	$	101.00
002869	All Aluminum R-fold Railgate Replacement Latch Plate-Right	1	$	183.00
002870	All Aluminum R-fold Railgate Replacement Latch Plate-Left	1	$	119.00
002886	1/2"SQ. Torsion Spring Kit (73Rail)	1	$	273.00
002887	1/2"SQ. Torsion Spring Kit (A73Rail)	1	$	273.00
002888	5/8"SQ. Torsion Spring Kit (A73Rail)	1	$	273.00
002889	1/2"SQ. Torsion Spring Kit (A79Rail)	1	$	273.00
002890	5/8"SQ. Torsion Spring Kit (A79Rail)	1	$	273.00
002891	3/4"SQ. Torsion Spring Kit (A79Rail)	1	$	273.00
002892	1/2"SQ. Torsion Spring Kit (A85Rail)	1	$	273.00
002893	5/8"SQ. Torsion Spring Kit (A85Rail)	1	$	273.00
002894	3/4"SQ. Torsion Spring Kit (A85Rail)	1	$	273.00
002895	1/2"SQ. Torsion Spring Kit (A89Rail)	1	$	273.00
002896	3/4"SQ. Torsion Spring Kit (A89Rail)	1	$	273.00
002897	1/2"SQ. Torsion Spring Kit (A95Rail)	1	$	273.00
002898	5/8"SQ. Torsion Spring Kit (A95Rail)	1	$	273.00
002899	3/4"SQ. Torsion Spring Kit (A95Rail)	1	$	273.00
002939	Universal Set 7/32" Replacement Lift Cable Kit (Not for Mini)	1	$	117.00
002992	Replacement R-Fold Latch Kit	2	$	36.05
003123	Set 7/32" Replacement Lift Cable Kit (Model 60 Only)	1	$	96.60
003124	Universal Set 5/16" Replacement Lift Cable Kit	1	$	193.00
003169	72P/72S EA Replacement Sub Assembly	1	$	252.00
003172	(95) SC 55+12 Replacement Aluminum Platform	1	$	3,067.00
003188	1046-1650 Replacement Platform Chain	2	$	52.20
003220	Cylinder Shaft w/Pulley Assembly (1346) Includes: Cylinder Repair Kit	1	$	207.00
003221	Cylinder Shaft w/Sprockets Assembly (Rail) Includes: Cylinder Repair Kit	1	$	384.00
003222	Cylinder Shaft w/Pulley Assembly (1040) Includes: Cylinder Repair Kit (54-1040 & 60-1040 before serial # 459225M)	1	$	136.00
003223	Cylinder Shaft w/Pulley Assembly (1046) Includes: Cylinder Repair Kit	1	$	193.00
003224	Cylinder Shaft w/Pulley Assembly (1034 & 1036) Includes: Cylinder Repair Kit	1	$	136.00
003225	Cylinder Shaft w/Pulley Assembly (1348-1350) Includes: Cylinder Repair Kit	1	$	207.00
003226	Cylinder Shaft w/Pulley Assembly (1648-1650) Includes: Cylinder Repair Kit	1	$	239.00
003227	Cylinder Shaft w/Pulley Assembly (1340) Includes: Cylinder Repair Kit (54-1040 & 60-1040 after serial # 462473M)	1	$	162.00
003228	Cylinder Shaft w/Pulley Assembly (1646) Includes: Cylinder Repair Kit	1	$	223.00
003249	Replacement Cylinder Barrel (after serial # 470166M)	2	$	213.00
003250	Replacement Cylinder Barrel Assembly (1034-1036) Includes: Cylinder Repair Kit	1	$	144.00
003251	Replacement Cylinder Barrel Assembly (1040) Includes: Cylinder Repair Kit (54-1040 & 60-1040 before serial # 459225M)	1	$	151.00
003252	Replacement Cylinder Barrel Assembly (1340) Includes: Cylinder Repair Kit (1340-1650) (54-1040 & 60-1040 after serial # 462473M)	1	$	193.00
003253	Replacement Cylinder Barrel Assembly (1046) Includes: Cylinder Repair Kit	1	$	211.00
003254	Replacement Cylinder Barrel Assembly (1348-1650) Includes: Cylinder Repair Kit	1	$	270.00
003256	Replacement Cylinder Barrel Assembly (1346-1646) Includes: Cylinder Repair Kit	1	$	270.00
003257	2"x35" Replacement Cylinder Barrel (Rail) Includes: Cylinder Repair Kit	1	$	300.00
003287	Cylinder Shaft w/Sprockets Assembly (73 Rail) Includes: Cylinder Repair Kit	1	$	384.00
003290	2"x29" Replacement Cylinder Barrel (73 Rail) Includes: Cylinder Repair Kit	1	$	300.00
003323	(89) SC 55+12 Replacement Aluminum Platform	1	$	2,954.00
003432	64SB-1646 Replacement Cylinder	1	$	346.00
003549	60 Toyota Replacement Sub Assembly	1	$	231.00
003551	Mini Replacement Sub Assembly	1	$	210.00
003552	48 Replacement Sub Assembly	1	$	210.00
003553	Dakota & Isuzu Replacement Sub Assembly	1	$	218.00
003554	54 Replacement Sub Assembly	1	$	218.00
003556	60 Replacement Sub Assembly	1	$	231.00
003558	64 Replacement Sub Assembly	1	$	239.00
003560	64SB Replacement Sub Assembly	1	$	249.00
003563	72 Replacement Sub Assembly	1	$	249.00
003568	80 Replacement Sub Assembly	1	$	249.00
003572	86 Replacement Sub Assembly	1	$	325.00
003576	91 Replacement Sub Assembly	1	$	325.00

003584	72P Replacement Sub Assembly	1	$	252.00
003588	Mini EA Replacement Sub Assembly	1	$	210.00
003589	48EA Replacement Sub Assembly	1	$	210.00
003590	Dakota EA Replacement Sub Assembly	1	$	218.00
003591	54EA Replacement Sub Assembly	1	$	218.00
003592	60 Toyota EA Replacement Sub Assembly	1	$	231.00
003593	60EA Replacement Sub Assembly	1	$	231.00
003594	64EA Replacement Sub Assembly	1	$	239.00
003595	64SB EA Replacement Sub Assembly	1	$	249.00
003596	72EA Replacement Sub Assembly	1	$	249.00
003597	80EA Replacement Sub Assembly	1	$	249.00
003598	86EA Replacement Sub Assembly	1	$	325.00
003599	91EA Replacement Sub Assembly	1	$	325.00
003688	Torsion Spring w/Hardware (Mini & 48)	1	$	36.75
003689	Torsion Spring w/Hardware (Dakota, Isuzu & 54)	1	$	36.75
003690	Torsion Spring w/Hardware (Toyota T-100 & 60)	1	$	36.75
003691	Torsion Spring Kit (64)	1	$	36.75
003692	Torsion Spring Kit (72)	1	$	36.75
003693	Torsion Spring Kit (80)	1	$	36.75
003694	Torsion Spring Kit (86)	1	$	36.75
003695	Torsion Spring Kit (91)	1	$	36.75
003698	Old Style SQ. Torsion Spring Kit (86)	1	$	94.00
003699	Old Style SQ. Torsion Spring Kit (91)	1	$	94.00
003818	Replacement Kickaway Spring w/Pin	2	$	8.55
003840	TP 1034 Replacement Platform Chain	2	$	35.55
003841	1036-1040 Replacement Platform Chain (54-1040 & 60-1040 before serial # 459225M)	2	$	42.30
003842	1340 Replacement Platform Chain (54-1040 & 60-1040 after serial # 462473M)	2	$	39.20
003846	1034 EA Replacement Platform Chain	2	$	35.55
003847	36" & 40" Travel EA Replacement Platform Chain	2	$	39.20
003848	50" Travel EA Replacement Platform Chain (with 1.579" Pin)	2	$	48.80
003849	40+8 Replacement Platform Chain	2	$	65.30
003883	Replacement G2 Treadplate Platform Chain	2	$	28.35
003884	48" Deep & 50" Travel EA Replacement Platform Chain	2	$	54.45
003894	Rail (BH) Replacement Platform Chain	2	$	75.45
003895	Rail (AB) Replacement Platform Chain	2	$	66.85
003896	Rail (BH) 65+6 Replacement Platform Chain	2	$	80.00
004036	Replacement License Plate Light & Bracket (154C)	1	$	23.15
004052	64SB Replacement Sub Assembly	1	$	283.00
004054	72 Replacement Sub Assembly	1	$	300.00
004056	80 Replacement Sub Assembly	1	$	325.00
004058	86 Replacement Sub Assembly	1	$	337.00
004060	91 Replacement Sub Assembly	1	$	350.00
004079	M319 Replacement Pump & Motor (3800psi) 3qt.** 1046	1	$	522.00
004149	13 Tooth Replacement Sprocket, Pin & Keeper	AB=3, BH=4	$	51.05
004156	Replacement Steel Box Cover w/Lights (73SC) (N)	1	$	232.00
004157	Replacement Steel Box Cover w/Lights (79SC) (N)	1	$	241.00
004158	Replacement Steel Box Cover w/Lights (85SC) (N)	1	$	263.00
004159	Replacement Steel Box Cover w/Lights (89SC) (N)	1	$	300.00
004160	Replacement Steel Box Cover w/Lights (95SC) (N)	1	$	326.00
004161	Replacement Alum. AB Sprocket Assembly	2	$	61.10
004162	Replacement Steel AB Sprocket Assembly	2	$	61.10
004175	3” Double (7/32”) Groove Replacement Pulley Kit with 3/4" Cross Box Pin (60-1040 before serial # 459225M)	1	$	32.70
004176	3” Single (7/32”) Groove Replacement Pulley Kit with 3/4" Cross Box Pin(60-1040 before serial # 459225M)	1	$	32.70
004177	3” Single (7/32”) Groove Replacement Pulley Kit with 3/4” Upright Pin	2	$	26.25
004179	3.5" Double (7/32") Groove Replacement Pulley Kit with 7/8" Cross Box Pin (60-1040 after serial # 462473M)	1	$	32.70
004180	3.5" Single (7/32") Groove Replacement Pulley Kit with 7/8" Cross Box Pin (60-1040 after serial # 462473M)	1	$	32.70
004181	4" Dia. Double (7/32") Groove Replacement Pulley Kit with 7/8" Cross Box Pin	1	$	62.50
004182	4" Dia. Double (5/16") Groove Replacement Pulley Kit with 7/8" Cross Box Pin	1	$	62.50
004183	4" Single (7/32") Groove Replacement Pulley Kit with 7/8" Upright Pin	2	$	53.15
004184	4" Single (5/16") Groove Replacement Pulley Kit with 7/8" Upright Pin	2	$	53.15
004185	4" Dia. Single (7/32") Groove Replacement Pulley Kit with 7/8" Cross Box Pin	1	$	62.50
004186	4" Dia. Single (5/16") Groove Replacement Pulley Kit with 7/8" Cross Box Pin	1	$	62.50
004188	19-Tooth Repair Sprocket with 3/4"x2" Pin & Keeper	1	$	53.15
004189	25-Tooth Repair Sprocket with 3/4"x2" Pin & Keeper	1	$	77.70
004190	13 Tooth Replacement Sprocket (Above-Bed only) with 3/4"x3" Pin & Keeper	2	$	46.95
004191	13 Tooth Replacement Sprocket, Pin & Keeper (All Aluminum)	AB=3, BH=4	$	61.10
004192	13 Tooth All Aluminum Replacement Sprocket, Pin & Keeper (Above-Bed only)	2	$	50.10
004196	Replacement Alum BH Outrail Cap	2	$	22.55

004197	Replacement Steel BH Outrail Cap	2	$	20.50
004245	Replacement Aluminum Box Cover w/Lights (89SC) (N)	1	$	468.00
004246	Replacement Aluminum Box Cover w/Lights (73SC) (N)	1	$	412.00
004247	Replacement Aluminum Box Cover w/Lights (79SC) (N)	1	$	431.00
004248	Replacement Aluminum Box Cover w/Lights (85SC) (N)	1	$	452.00
004249	Replacement Aluminum Box Cover w/Lights (95SC) (N)	1	$	489.00
004290	M319 Replacement Pump & Motor (2600psi) 3qt.** 1600# Railgate (N)	1	$	522.00
004291	M319 Replacement Pump & Motor (3200psi) 3qt.** 2000# Railgate (N)	1	$	522.00
004295	M319 Replacement Pump & Motor (2000psi) 3qt.** 1046-1050	1	$	522.00
004354	Replacement Monarch Plastic Tank (2qt.)** 73 Railgate	1	$	62.25
004355	Replacement 3qt. Monarch Plastic Tank (G2) **	1	$	62.25
004360	M319 Replacement Pump & Motor (2100psi) 1.5qt.** Mini 500	1	$	522.00
004362	M319 Replacement Pump & Motor (3800psi) 1.5qt.** 1034,1036,1040(54-1040 & 60-1040 before serial # 459225M)	1	$	522.00
004363	M319 Replacement Pump & Motor (3400psi) 1.5qt.** 1340	1	$	522.00
004365	M319 Replacement Pump & Motor (2500psi) 3qt.** 1346 Thru 1350	1	$	522.00
004366	M319 Replacement Pump & Motor (3000psi) 3qt.** 1646 Thru 1650	1	$	522.00
004485	M319 Replacement Pump & Motor (2600psi) 2qt.** 1600# Railgate (73) (N)	1	$	522.00
004486	M319 Replacement Pump & Motor (3200psi) 2qt.** 2000# Railgate (73) (N)	1	$	522.00
004559	72P w/F11 EA Replacement Platform	1	$	1,022.00
004565	72P/72S 37+11+6 EA Replacement Platform	1	$	1,299.00
004570	Replacement 4 Ga. 2 Wire Electrical Cable w/Lugs 26ft.	1	$	103.00
004589	48 37+11+6 EA Replacement Platform	1	$	1,074.00
004708	Replacement 4 Ga. 2 Wire Electric Cable w/Lugs-33 ft.	1	$	130.00
004710	Replacement Steel Box Cover w/Lights (73SC)	1	$	232.00
004712	EA Replacement Platform Chain Pin (1.079")	2	$	9.50
004713	EA Replacement Latch Rivet(1.5")	2	$	10.90
004715	EA Replacement Platform Chain Pin (1.579")	2	$	10.70
004716	EA Replacement Latch Rivet (2")	2	$	10.90
004717	EA Replacement Flipper Rivet	2	$	11.20
004760	Replacement Steel Box Cover w/Lights (79SC)	1	$	241.00
004762	Replacement Steel Box Cover w/Lights (85SC)	1	$	263.00
004764	Replacement Steel Box Cover w/Lights (89SC)	1	$	300.00
004772	Replacement Steel Box Cover w/Lights (95SC)	1	$	326.00
004798	64/65 48" EA Replacement Platform	1	$	1,217.00
004799	60 48 EA Replacement Platform	1	$	1,176.00
004820	54 48 EA Replacement Platform	1	$	1,140.00
004833	54 G2 27" Treadplate Replacement Platform	1	$	367.00
004834	54 G2 38" Treadplate Replacement Platform	1	$	532.00
004835	54 G2 42" Treadplate Replacement Platform	1	$	545.00
004837	Replacement Box Cover (54 G2)	1	$	83.00
004866	60 G2 27" Treadplate Replacement Platform	1	$	392.00
004867	60 G2 38" Treadplate Replacement Platform	1	$	577.00
004868	60 G2 42" Treadplate Replacement Platform	1	$	616.00
004949	Replacement Box Cover (60 G2)	1	$	87.10
004950	Replacement Box Cover (64 G2)	1	$	89.45
004961	Replacement Box Cover (Mini & 48)	1	$	29.35
004962	Replacement Box Cover (Dakota, Isuzu & 54)	1	$	32.75
004963	Replacement Box Cover (Toyota T-100 & 60)	1	$	36.45
004964	Replacement Box Cover (64)	1	$	39.35
004965	Replacement Box Cover (72)	1	$	43.20
004966	Replacement Box Cover (80)	1	$	48.45
004967	Replacement Box Cover (86)	1	$	51.95
004968	Replacement Box Cover (91)	1	$	55.10
006329	72LD Replacement Sub Assembly (For Retro Kit # 2514 Only)	1	$	300.00
006330	80LD Replacement Sub Assembly (For Retro Kit # 2515 Only)	1	$	325.00
006331	86LD Replacement Sub Assembly (For Retro Kit # 2516 Only)	1	$	337.00
006332	91LD Replacement Sub Assembly (For Retro Kit # 2517 Only)	1	$	350.00
006374	(73) SC 55+12 Replacement Aluminum Platform	1	$	2,775.00
006419	(85) TA 35+10+12 Replacement Aluminum R-Fold Platform	1	$	2,681.00
006420	(89) TA 35+10+12 Replacement Aluminum R-Fold Platform	1	$	2,909.00
006422	(85) TA 35+15+6 Replacement Aluminum R-Fold Platform	1	$	2,799.00
006425	48 & Mini Replacement Hinge Tube - Steel Platform	1	$	32.75
006426	54, Dakota & Isuzu Replacement Hinge Tube - Steel Platform	1	$	32.75
006427	60 & Toyota Replacement Hinge Tube - Steel Platform	1	$	32.75
006428	64 Replacement Hinge Tube - Steel Platform	1	$	32.75
006429	72 Replacement Hinge Tube - Steel Platform		$	38.45
006430	80 Replacement Hinge Tube- Steel Platform	1	$	48.85
006431	86 Replacement Hinge Tube- Steel Platform	1	$	48.85

006432	91 Replacement Hinge Tube- Steel Platform	1	$	48.85
006433	88" Replacement Hinge Tube (85)	1	$	88.55
006434	92" Replacement Hinge Tube (89)	1	$	88.55
006435	82-1/2"" Replacement Hinge Tube (79)	1	$	88.55
006436	98" Replacement Hinge Tube (95)	1	$	88.55
006437	76-1/2" Replacement Hinge Tube (73)	1	$	88.55
006446	(89) TA 35+15+6 Replacement Aluminum R-Fold Platform	1	$	3,027.00
006447	(85) TA 30+15+6 Replacement Aluminum R-Fold Platform	1	$	2,681.00
006448	(89) TA 30+15+6 Replacement Aluminum R-Fold Platform	1	$	2,909.00
006466	Replacement R-Fold Hinge Kit	2	$	66.35
006473	Replacement 38" EA Platform Chain	2	$	35.55
006494	(79) SC 55+12 Replacement Aluminum Platform	1	$	2,843.00
006514	Replacement Cloth Chain Cover 20"	2	$	13.00
006515	Replacement Cloth Chain Cover 17"	2	$	13.00
006516	Replacement Cloth Chain Cover 29"	2	$	13.00
006593	Replacement Cloth Chain Cover 53"	2	$	13.00
006596	Replacement Cloth Chain Cover 38"	2	$	13.00
006597	Replacement Cloth Chain Cover 46"	2	$	13.00
006832	1-1/2" Replacement Cylinder Clamp (1034-1040) (54-1040 & 60-1040 before serial # 459225M)	1	$	8.20
006833	1-3/4" & 2" Replacement Cylinder Clamp (1340-1650) (54-1040 & 60-1040 after serial # 462473M)	1	$	8.20
006834	Replacement Cylinder Clamp (Rail)	1	$	8.20
006835	Replacement Cylinder Clamp (All Aluminum Rail)	1	$	9.40
007007	G2 Replacement Lower Arm w/Pins & Bushings	2	$	120.00
007010	1034-1036 Replacement Lift Arm w/Pins & Zerks	4	$	50.05
007031	M319 Replacement Pump & Motor (2800psi) 1.5qt.** (54-1040 & 60-1040 after serial # 462473M)	1	$	522.00
007290	Replacement All Aluminum Self-Close Arm Kit (Right)	1	$	91.90
007292	Replacement Steel Rail Roller Chain Cover (Above-Bed) (N)	2	$	20.50
007293	Replacement Aluminum Rail Roller Chain Cover (Above-Bed) (N)	2	$	27.25
007516	Replacement Threaded Latch Bushing	2	$	6.25
007545	3/4" Arm Pin w/Zerk (before serial # M-83394)	10	$	6.25
007547	7/8" Arm Pin w/Zerk (before serial # M-82341-1000#&1300#)	10	$	6.25
007866	Replacement Roller Chain Cover (Above-Bed only)	2	$	20.50
007884	Replacement All Aluminum Rail Roller Chain Cover (Above-Bed only)	2	$	27.25
007947	Roller Chain Adjustment Screw, Clevis & Pin	2	$	31.90
007979	(A85SC) Replacement Safety Trip Bar-77-1/2"	1	$	81.60
007980	(A89SC) Replacement Safety Trip Bar-81-1/2"	1	$	81.60
007992	(A73SC) Replacement Safety Trip Bar-65-1/2"	1	$	81.60
007993	(A79SC) Replacement Safety Trip Bar-71-1/2"	1	$	81.60
007994	(A95SC) Replacement Safety Trip Bar-87-1/2"	1	$	81.60
007995	Railgate Replacement Self-Close Rod & Linkage (95)	1	$	83.70
008002	Replacement Self-Close Safety Trip Bar-65-1/2" (73)	1	$	48.60
008020	173 Pitch Replacement Roller Chain Bed-Height Passenger's Side	1	$	154.00
008021	281 Pitch Replacement Roller Chain Above-Bed Passenger's Side	1	$	237.00
008022	219 Pitch Replacement Roller Chain Bed-Height Driver's Side	1	$	186.00
008023	325 Pitch Replacement Roller Chain Above-Bed Driver's Side	1	$	266.00
008024	EA Torsion Spring Kit (48)	1	$	64.40
008025	Torsion Spring Kit (54)	1	$	64.40
008026	Torsion Spring Kit (60)	1	$	64.40
008027	Torsion Spring Kit (64/65)	1	$	64.40
008028	Torsion Spring Kit (73) Steel Platform	1	$	64.40
008029	EA Torsion Spring Kit (81)	1	$	64.40
008030	Replacement Roller Chain Attachment Fitting	2	$	26.05
008032	EA Torsion Spring Kit (87)	1	$	64.40
008033	EA Torsion Spring Kit (92)	1	$	64.40
008035	229 Pitch Replacement Roller Chain Bed-Height Driver's Side (95)	1	$	193.00
008044	335 Pitch Replacement Roller Chain Above-Bed Driver's Side (95)	1	$	269.00
008058	Railgate Replacement Self-Close Linkage Only (Excludes Rod)	1	$	49.85
008059	Railgate Replacement Self-Close Rod & Linkage (89)	1	$	83.70
008060	Railgate Replacement Self-Close Rod & Linkage (85)	1	$	83.70
008061	Railgate Replacement Self-Close Rod & Linkage (79)	1	$	83.70
008062	Replacement Self-Close Safety Trip Bar-77-1/2" (85)	1	$	48.60
008063	Replacement Self-Close Safety Trip Bar-81-1/2" (89)	1	$	48.60
008064	Replacement Self-Close Safety Trip Bar-71-1/2" (79)	1	$	48.60
008065	Replacement Self-Close Safety Trip Bar-87-1/2" (95)	1	$	48.60
008066	1-3/4" Replacement Self-Close Roller Kit	2	$	14.35
008067	Repair Self-Close Arm Bushing Kit-Steel Platform	2	$	12.90
008068	Repair Self-Close Arm Bushing Kit-Aluminum Platform	2	$	19.55
008071	Aluminum Railgate Replacement Self-Close Rod & Linkage (85)	1	$	91.70

008072	Aluminum Railgate Replacement Self-Close Rod & Linkage (89)	1	$	91.70
008082	EA 37+11+6 Torsion Spring Kit (48)	1	$	64.40
008083	Torsion Spring Kit (54) Deep Platform	1	$	64.40
008084	Torsion Spring Kit (60) Deep Platform	1	$	64.40
008085	Torsion Spring Kit (64/65) Deep Platform	1	$	64.40
008092	Railgate Replacement Self-Close Rod & Linkage (73)	1	$	83.70
008093	Aluminum Railgate Replacement Self-Close Rod & Linkage (73)	1	$	91.70
008094	Aluminum Railgate Replacement Self-Close Rod & Linkage (79)	1	$	91.70
008095	Aluminum Railgate Replacement Self-Close Rod & Linkage (95)	1	$	91.70
008116	EA Torsion Spring Kit (73)	1	$	64.40
008117	SQ. Torsion Spring Kit (81)	1	$	112.00
008118	SQ. Torsion Spring Kit (87)	1	$	112.00
008119	SQ. Torsion Spring Kit (92)	1	$	112.00
008128	Replacement All Aluminum Self-Close Arm Kit (Left)	1	$	91.90
008129	(A73SC) Replacement Safety Trip Bar-65-1/2" (N)	1	$	81.60
008130	(A79SC) Replacement Safety Trip Bar-71-1/2" (N)	1	$	81.60
008131	(A85SC) Replacement Safety Trip Bar-77-1/2" (N)	1	$	81.60
008132	(A89SC) Replacement Safety Trip Bar-81-1/2" (N)	1	$	81.60
008133	(A95SC) Replacement Safety Trip Bar-87-1/2" (N)	1	$	81.60
008136	Replacement Steel Platform Self-Close Arm Kit- Right	1	$	53.15
008137	Replacement Steel Platform Self-Close Arm Kit- Left	1	$	53.15
008138	2" Replacement Self-Close Roller Kit	2	$	14.35
008139	Replacement Aluminum Platform Self-Close Arm Kit- Right	1	$	63.00
008140	Replacement Aluminum Platform Self-Close Arm Kit- Left	1	$	63.00
008169	(73SC) Replacement Safety Trip Bar-65-1/2" (N)	1	$	48.60
008170	(79SC) Replacement Safety Trip Bar-71-1/2" (N)	1	$	48.60
008171	(85SC)Replacement Safety Trip Bar-77-1/2" (N)	1	$	48.60
008172	(89SC) Replacement Safety Trip Bar-81-1/2" (N)	1	$	48.60
008173	(95SC) Replacement Safety Trip Bar-87-1/2" (N)	1	$	48.60
008179	Replacement Rail Cylinder Pin & Keeper (Alum)	1	$	35.70
008222	Replacement Rail Cylinder Pin & Keeper	1	$	30.50
008363	Replacement Left Cartstop Assembly (73) w/Spring (not in taper)	1	$	125.00
008364	Replacement Right Cartstop Assembly (73) w/Spring (not in taper)	1	$	125.00
008365	Replacement Left Cartstop Assembly (95) w/Spring (not in taper)	1	$	133.00
008366	Replacement Right Cartstop Assembly (95) w/Spring (not in taper)	1	$	133.00
008390	Replacement Left Cartstop Assembly (79) w/Spring (not in taper)	1	$	127.00
008391	Replacement Left Cartstop Assembly (85) w/Spring (not in taper)	1	$	129.00
008392	Replacement Left Cartstop Assembly (89) w/Spring (not in taper)	1	$	131.00
008393	Replacement Right Cartstop Assembly (79) w/Spring (not in taper)	1	$	127.00
008394	Replacement Right Cartstop Assembly (85) w/Spring (not in taper)	1	$	129.00
008395	Replacement Right Cartstop Assembly (89) w/Spring (not in taper)	1	$	131.00
008396	Replacement Cartstop Spring Assembly (not in taper)	2	$	19.80
008397	Replacement Cartstop Latch Assembly (L) (not in taper)	1	$	74.95
008398	Replacement Cartstop Latch Assembly (R) (not in taper)	1	$	74.95
008591	Replacement Bearing Pad Set (Aluminum Mainframe)	2	$	37.30
008618	Replacement Bearing Pad Set (Steel Mainframe)	2	$	37.30
008628	44" Replacement Slider w/Pads-Left Self-Close (Steel Mainframe-BH)	1	$	211.00
008629	44" Replacement Slider w/Pads-Right Self-Close (Steel Mainframe-BH)	1	$	211.00
008654	44" Replacement Slider w/Pads-Left Self-Close (Alum. Mainframe-BH)	1	$	211.00
008655	44" Replacement Slider w/Pads-Right Self-Close (Alum. Mainframe-BH)	1	$	211.00
009488	(72) LD Treadplate Replacement Platform (New Style)	1	$	1,029.00
009489	(80) LD Treadplate Replacement Platform (New Style)	1	$	1,053.00
009491	Replacement LD Insert Latch Pin Assembly	2	$	43.75
009492	Replacement LD Insert Pivot Pin Assembly	2	$	31.35
009493	Replacement LD Insert Handle Assembly	1	$	20.50
009494	Replacement LD Access Cover	2	$	7.55
009495	Replacement Outer Platform Assembly (91LD)	1	$	286.00
009496	Replacement Outer Platform Assembly (86LD)	1	$	281.00
009497	Replacement Outer Platform Assembly (80LD)	1	$	279.00
009498	Replacement Outer Platform Assembly (72LD)	1	$	274.00
009504	Replacement Short Insert Link Assembly (LND)	1	$	20.95
009514	Replacement Long Insert Link Assembly (73LND)	1	$	63.90
009517	Replacement Long Insert Link Assembly (81LND)	1	$	63.90
009518	Replacement Long Insert Link Assembly (87LND)	1	$	63.90
009519	Replacement Long Insert Link Assembly (92LND)	1	$	63.90
009521	Replacement Latch Pin & Lanyard Kit	2	$	9.65
009534	Replacement Platform Insert (73LD)	1	$	700.00
009541	Replacement Platform Insert (81LD)	1	$	750.00

009542	Replacement Platform Insert (87LD)	1	$	781.00
009543	Replacement Platform Insert (92LD)	1	$	812.00
009552	(91) LD Treadplate Replacement Platform (New Style)	1	$	1,091.00
009553	(86) LD Treadplate Replacement Platform (New Style)	1	$	1,074.00
009573	Replacement Pendant Control	1	$	193.00
009645	Release Solenoid External Assembly w/Connector	1	$	96.75
009754	1648-1650 Replacement Cylinder	1	$	346.00
009756	1034 & 1036 Replacement Cylinder	1	$	266.00
009757	Railgate Replacement Cylinder (73)	1	$	419.00
009758	1046 Replacement Cylinder	1	$	346.00
009759	1348-1350 Replacement Cylinder	1	$	346.00
009760	Railgate Replacement Cylinder (79-95)	1	$	419.00
009761	1040 Replacement Cylinder (54-1040 & 60-1040 before serial # 459225M)	1	$	284.00
009762	1340 Replacement Cylinder (54-1040 & 60-1040 after serial # 462473M)	1	$	305.00
009763	64SB-1346 Replacement Cylinder	1	$	346.00
010199	Replacement License Plate Light & Bracket (H1)	1	$	23.25
010280	(65) G2 35" Treadplate Replacement Platform	1	$	615.00
010281	(65) G2 41" Treadplate Replacement Platform	1	$	944.00
010282	(65) G2 37" Extruded Aluminum Replacement Platform	1	$	1,156.00
010283	(65) G2 41" Extruded Aluminum Replacement Platform	1	$	1,508.00
010284	65-50 G2 Replacement Sub Assembly	1	$	396.00
010285	65-50 G2 Replacement Upper Arm Assembly	1	$	580.00
010286	Replacement Box Cover (65G2)	1	$	89.45
010288	Torsion Spring Kit (65) Steel Platform	1	$	64.40
010450	Set 7/32" Replacement Lift Cable Kit (Mini Only)	1	$	96.60
010451	650 Pivot Latch Kit (Lever)	1	$	31.55
010452	(73) G2 Lift and Dump Replacement Platform	1	$	1,029.00
010453	(81) G2 Lift and Dump Replacement Platform	1	$	1,053.00
010454	(87) G2 Lift and Dump Replacement Platform	1	$	1,074.00
010455	(92) G2 Lift and Dump Replacement Platform	1	$	1,091.00
010456	73LD G2 Replacement Sub Assembly	1	$	517.00
010457	81LD G2 Replacement Sub Assembly	1	$	525.00
010458	87LD G2 Replacement Sub Assembly	1	$	540.00
010459	92LD G2 Replacement Sub Assembly	1	$	557.00
010460	G2 (LD) Replacement Latch Kit-Left	1	$	34.95
010461	G2 (LD) Replacement Latch Kit-Right	1	$	34.95
010462	G2 Replacement Outer Platform Assembly (73LD)	1	$	274.00
010463	G2 Replacement Outer Platform Assembly (81LD)	1	$	279.00
010464	G2 Replacement Outer Platform Assembly (87LD)	1	$	281.00
010465	G2 Replacement Outer Platform Assembly (92LD)	1	$	287.00
010466	Replacement G2 LD Sub Assembly Seal Belting Kit	2	$	38.50
010512	Drop Pin Assembly Kit (Set of 2) (36-50" Travel)	1	$	26.90
010513	Drop Pin Assembly Kit (Set of 2) (Mini)	1	$	26.90
010895	Rail (AB) 65+6 Replacement Platform Chain	2	$	75.45
011252	71" Replacement Aluminum Platform	1	$	3,298.00
011253	52" Replacement Aluminum Platform	1	$	2,699.00
011254	Replacement Cantilever Platform Pivot Pin	1	$	144.00
011255	Replacement Hydraulic Hose- Fold Cylinder Long	1	$	36.80
011256	Replacement Hydraulic Hose- Fold Cylinder Short	1	$	50.20
011257	Replacement Hydraulic Hose- Lift Cylinder Long	1	$	53.35
011258	Replacement Hydraulic Hose- Lift Cylinder Short	1	$	29.70
011259	Replacement Platform Support Arm (Passenger)	1	$	318.00
011260	Replacement Platform Support Arm (Driver)	1	$	291.00
011261	Replacement Fold Cylinder (Cantilever)	1	$	539.00
011262	Cantilever Replacement Platform Pivot Sub Assembly	1	$	377.00
011263	Cantilever Replacement Lift Arm w/Pins & Keepers	1	$	599.00
011264	7/8" Replacement Cantilever Cylinder Rod Pin w/Keeper	1	$	33.75
011265	Cantilever Replacement Tension Arm w/Pins & Keepers (Left)	1	$	242.00
011266	7/8" Replacement Cantilever Cylinder Base Pin w/Keeper	1	$	37.80
011267	Replacement Cantilever Pump Box (19-38/") Cover	1	$	46.90
011268	3/4" Replacement Cantilever Tension Arm Pin w/Keeper	4	$	26.65
011269	Replacement License Plate Bracket w/Light (Sprinter)	1	$	95.00
011270	Replacement License Plate Bracket w/Light (Nissan)	1	$	40.65
011271	Replacement Limit Switch Kit (Cantilever)	1	$	70.20
011272	Replacement Cantilever Stabilizer Tube	1	$	61.20
011273	Replacement 1330 Cantilever Pump & Motor Unit (2750psi) (19-3/8" Pump Box)	1	$	1,053.00
011274	Replacement Cantilever Lift Cylinder	1	$	539.00
011275	Replacement Cantilever Pump Box (19-3/8")	1	$	131.00

011276	Replacement 04MORB x 04FPT x 90 Degree Cylinder Elbow	2	$	11.70
011277	Replacement 2qt. Monarch Plastic Tank (Cantilever)	1	$	62.25
011278	Replacement Pendant Supply Cable (Cantilever)	1	$	90.65
011279	Lift Cylinder Shaft Kit (Cantilever)	1	$	344.00
011280	1-1/4" Replacement Cantilever Lift Arm Pin w/Keeper	2	$	56.65
011281	Replacement Flow Control (Cantilever)	2	$	49.50
011283	Replacement 04MORB x 04MJIC x 90 Degree Cylinder Elbow	1	$	6.50
011284	Replacement Latch Pin w/Lanyard (Cantilever)	1	$	11.75
011285	Replacement Cantilever Cart Stop Latch Kit	2	$	19.90
011286	Cantilever Replacement Tension Arm w/Pins & Keepers (Right)	1	$	242.00
011445	Replacement Vent Plug (Cantilever) Plastic	1	$	6.50
011446	Replacement Cantilever Pendant Mounting Bracket (Sprinter, Promaster, & Transit)	1	$	10.10
011447	Replacement Cantilever Pendant Mounting Bracket (Nissan)	1	$	10.10
011448	Replacement Cantilever Pendant Mounting Bracket (Chevrolet)	1	$	10.10
011449	Replacement Cantilever Circuit Board	1	$	202.00
011450	Lift Cylinder Seal Repair Kit (Cantilever)	1	$	107.00
011452	Replacement Hydraulic Hose- Power Unit	1	$	33.60
011453	Fold Cylinder Seal Repair Kit (Cantilever)	1	$	107.00
011454	Fold Cylinder Shaft Kit (Cantilever)	1	$	344.00
011455	Replacement 04MORB-04MJIC Adapter	1	$	6.50
011675	Replacement Cantilever Sprinter Bridge	1	$	336.00
011701	Replacement Latch Pin & Lanyard (G2)	2	$	13.15
011711	(85) 36+12 SC/TA Replacement Steel Platform	1	$	1,215.00
011712	(89) 36+12 SC/TA Replacement Steel Platform	1	$	1,243.00
011713	(95) 36+12 SC/TA Replacement Steel Platform	1	$	1,329.00
011714	(85) 42+12 SC/TA Replacement Steel Platform	1	$	1,326.00
011715	(89) 42+12 SC/TA Replacement Steel Platform	1	$	1,352.00
011716	(95) 42+12 SC/TA Replacement Steel Platform	1	$	1,380.00
011717	(85) 48+12 SC/TA Replacement Steel Platform	1	$	1,330.00
011718	(89) 48+12 SC/TA Replacement Steel Platform	1	$	1,362.00
011719	(95) 48+12 SC/TA Replacement Steel Platform	1	$	1,390.00
011720	(85) 35+12 SC/TA Replacement Aluminum Platform	1	$	2,223.00
011721	(89) 35+12 SC/TA Replacement Aluminum Platform	1	$	2,297.00
011722	(95) 35+12 SC/TA Replacement Aluminum Platform	1	$	2,409.00
011723	(85) 40+12 SC/TA Replacement Aluminum Platform	1	$	2,395.00
011724	(89) 40+12 SC/TA Replacement Aluminum Platform	1	$	2,478.00
011725	(95) 40+12 SC/TA Replacement Aluminum Platform	1	$	2,601.00
011726	(85) 45+12 SC/TA Replacement Aluminum Platform	1	$	2,622.00
011727	(89) 45+12 SC/TA Replacement Aluminum Platform	1	$	2,712.00
011728	(95) 45+12 SC/TA Replacement Aluminum Platform	1	$	2,849.00
011729	(85) 50+12 SC/TA Replacement Aluminum Platform	1	$	2,793.00
011730	(89) 50+12 SC/TA Replacement Aluminum Platform	1	$	2,892.00
011731	(95) 50+12 SC/TA Replacement Aluminum Platform	1	$	3,041.00
011732	(85) 55+12 SC/TA Replacement Aluminum Platform	1	$	2,962.00
011733	(89) 55+12 SC/TA Replacement Aluminum Platform	1	$	3,069.00
011734	(95) 55+12 SC/TA Replacement Aluminum Platform	1	$	3,230.00
011735	(85) 60+12 SC/TA Replacement Aluminum Platform	1	$	3,114.00
011736	(89) 60+12 SC/TA Replacement Aluminum Platform	1	$	3,230.00
011737	(95) 60+12 SC/TA Replacement Aluminum Platform	1	$	3,403.00
011738	(85) 65+12 SC/TA Replacement Aluminum Platform	1	$	3,284.00
011739	(89) 65+12 SC/TA Replacement Aluminum Platform	1	$	3,408.00
011740	(95) 65+12 SC/TA Replacement Aluminum Platform	1	$	3,594.00
011741	(85) 70+12 SC/TA Replacement Aluminum Platform	1	$	3,455.00
011742	(89) 70+12 SC/TA Replacement Aluminum Platform	1	$	3,587.00
011743	(95) 70+12 SC/TA Replacement Aluminum Platform	1	$	3,784.00
011744	(85) 35+12 SC/TA Replacement Aluminum Platform w/Cart Stop	1	$	2,447.00
011745	(89) 35+12 SC/TA Replacement Aluminum Platform w/Cart Stop	1	$	2,528.00
011746	(95) 35+12 SC/TA Replacement Aluminum Platform w/Cart Stop	1	$	2,649.00
011747	(85) 40+12 SC/TA Replacement Aluminum Platform w/Cart Stop	1	$	2,622.00
011748	(89) 40+12 SC/TA Replacement Aluminum Platform w/Cart Stop	1	$	2,706.00
011749	(95) 40+12 SC/TA Replacement Aluminum Platform w/Cart Stop	1	$	2,841.00
011750	(85) 45+12 SC/TA Replacement Aluminum Platform w/Cart Stop	1	$	2,845.00
011751	(89) 45+12 SC/TA Replacement Aluminum Platform w/Cart Stop	1	$	2,946.00
011752	(95) 45+12 SC/TA Replacement Aluminum Platform w/Cart Stop	1	$	3,088.00
011753	(85) 50+12 SC/TA Replacement Aluminum Platform w/Cart Stop	1	$	3,017.00
011754	(89) 50+12 SC/TA Replacement Aluminum Platform w/Cart Stop	1	$	3,122.00
011755	(95) 50+12 SC/TA Replacement Aluminum Platform w/Cart Stop	1	$	3,280.00
011756	(85) 55+12 SC/TA Replacement Aluminum Platform w/Cart Stop	1	$	3,179.00

011757	(89) 55+12 SC/TA Replacement Aluminum Platform w/Cart Stop	1	$	3,300.00
011758	(95) 55+12 SC/TA Replacement Aluminum Platform w/Cart Stop	1	$	3,469.00
011759	(85) 60+12 SC/TA Replacement Aluminum Platform w/Cart Stop	1	$	3,336.00
011760	(89) 60+12 SC/TA Replacement Aluminum Platform w/Cart Stop	1	$	3,459.00
011761	(95) 60+12 SC/TA Replacement Aluminum Platform w/Cart Stop	1	$	3,643.00
011762	(85) 65+12 SC/TA Replacement Aluminum Platform w/Cart Stop	1	$	3,508.00
011763	(89) 65+12 SC/TA Replacement Aluminum Platform w/Cart Stop	1	$	3,639.00
011764	(95) 65+12 SC/TA Replacement Aluminum Platform w/Cart Stop	1	$	3,833.00
011765	(85) 70+12 SC/TA Replacement Aluminum Platform w/Cart Stop	1	$	3,679.00
011766	(89) 70+12 SC/TA Replacement Aluminum Platform w/Cart Stop	1	$	3,801.00
011767	(95) 70+12 SC/TA Replacement Aluminum Platform w/Cart Stop	1	$	4,025.00
011768	Rail (55+12 & Below) Replacement Platform Chain (37 Links)	2	$	78.35
011769	Rail (60+12 & Above) Replacement Platform Chain (47 Links)	2	$	84.55
011770	Replacement Slider	2	$	549.00
011771	Replacement Slider Wheel	1	$	99.60
011772	Replacement Slider Wheel Set	2	$	371.00
011773	Replacement 3.00 OD Pulley, Pin & Keeper	5	$	102.00
011774	Replacement Idler Pulley, Pin & Keeper	2	$	26.65
011775	Replacement 3.50 OD Pulley, Pin & Keeper	1	$	73.85
011776	Replacement 4.72 OD Pulley, Pin & Keeper	1	$	113.00
011777	Replacement Steel Box Cover w/Lights (85)	1	$	263.00
011778	Replacement Steel Box Cover w/Lights (89)	1	$	300.00
011779	Replacement Steel Box Cover w/Lights (95)	1	$	326.00
011780	Replacement Pump & Motor (3600psi) 3qt.** 2500# Railgate	1	$	522.00
011781	Replacement Pump & Motor (3800psi) 3qt.** 3000# Railgate	1	$	522.00
011785	2" Cylinder Repair Kit (25-30 Rail)	1	$	262.00
011786	Replacement Cylinder (25-30) Railgate	1	$	522.00
011787	Cylinder Shaft w/Pulleys Assembly (Rail) Includes: Cylinder Repair Kit	1	$	472.00
011788	2"x35" Replacement Cylinder Barrel (25-30 Rail) Includes: Cylinder Repair Kit	1	$	403.00
011789	Replacement Cylinder Clamp (Rail)	1	$	8.20
011790	Replacement Rail Cylinder Pin & Keeper	1	$	30.50
011791	Replacement Steel Latch Plate-Right	1	$	134.00
011792	Replacement Steel Latch Plate-Left	1	$	59.45
011793	Replacement Latch Lever Handle Grip	1	$	4.15
011794	Replacement Leaf Chain Attachment Fitting	2	$	107.00
011795	Replacement Leaf Chain 265 Pitch - Passenger's Side (BH)	1	$	608.00
011796	Replacement Leaf Chain 285 Pitch - Driver's Side (85) (BH)	1	$	644.00
011797	Replacement Leaf Chain 291 Pitch - Passenger's Side (AB)	1	$	657.00
011798	Replacement Leaf Chain 301 Pitch - Driver's Side (95) (BH)	1	$	676.00
011799	Leaf Chain Adjustment Screw, Clevis & Pin	2	$	97.00
011800	Replacement Rail Chain Cover BH	2	$	26.95
011801	Replacement Steel Upper Pulley Assembly Left	1	$	189.00
011802	Replacement Steel Upper Pulley Assembly Right	1	$	189.00
011803	Replacement 2 Ga. 2 Wire Electric Cable w/Lugs-33 ft.	1	$	262.00
011804	Replacement 200 Amp Manual Reset Circuit Breaker	1	$	78.45
011805	Replacement Self-Close Handle Grip	1	$	8.35
011806	Replacement Railgate Latch Lever	1	$	71.20
011807	Replacement Cloth Chain Cover 58"	2	$	13.00
011809	1/2"SQ. Torsion Spring Kit (85Rail)	1	$	280.00
011810	1/2"SQ. Torsion Spring Kit (89Rail)	1	$	280.00
011811	1/2"SQ. Torsion Spring Kit (95Rail)	1	$	280.00
011812	5/8"SQ. Torsion Spring Kit (85Rail)	1	$	280.00
011813	5/8"SQ. Torsion Spring Kit (89Rail)	1	$	280.00
011814	5/8"SQ. Torsion Spring Kit (95Rail)	1	$	280.00
011822	Replacement Self-Close Arm w/Hardware (Steel)	1	$	82.05
011824	Replacement Self-Close Arm w/Hardware (Alum)	1	$	93.45
011844	Replacement Handle Strap (Cantilever)	1	$	13.00
011845	Replacement Upper Platform Cover (Cantilever)	1	$	86.95
011846	Replacement Lower Platform Cover (Cantilever)	1	$	110.00
011864	36" Replacement Slider w/Pads-Self-Close (Steel Mainframe-AB) after 4/19/11	2	$	182.00
011865	36" Replacement Slider w/Pads-Self-Close (Alum. Mainframe-AB)	2	$	182.00
011872	36" Replacement Slider w/Pads-R-Fold (Steel Mainframe-AB) after 4/19/11	2	$	182.00
011873	36" Replacement Slider w/Pads-R-Fold (Alum. Mainframe-AB)	2	$	182.00
011947	Replacement 2Way/2Pos Solenoid Assembly w/Connector	2	$	96.75
011948	Replacement 4Way/2Pos Solenoid Assembly w/Connector	2	$	134.00
011949	Replacement 3Way/2Pos Solenoid Assembly w/Connector	1	$	121.00
011950	Replacement Cantilever Poppet Check Valve	2	$	28.55
012216	Replacement Driver Side Support Arm Rubber Bumper	1	$	6.85

012607	Replacement 90 Degree Elbow (Male 9/16 ORB x Female 9/16 ORB)	1	$	10.55
012608	Replacement Flow Control (9/16 M x 7/16 Fx 0.078) w/ Adapters for (3/8 M x 3/8 F x 0.078)	1	$	51.40
012609	Replacement 1/4"x20" Hydraulic Hose w/ Adapters (79,85,89,95)	1	$	47.20
012610	Replacement 1/4"x15" Hydraulic Hose w/ Adapters (73)	1	$	47.20
012611	Replacement 90 Degree Elbow (Male 9/16 ORB x Male 7/16 JIC)	1	$	10.55
012623	Replacement Up Stop Rod Assembly	1	$	43.25
012624	Replacement PS Latch	1	$	132.00
012625	Replacement DS Latch	1	$	106.00
012626	Replacement UHMW Poly. Rail Plate Wear Latch	2	$	27.10
012627	Replacement Latch Flipper	1	$	50.10
012628	Replacement Latch Pin and Lanyard	1	$	11.75
012679	Replacement 1/4"x29" Hydraulic Hose w/ Adapters (Mini & 48)	1	$	45.15
012680	Replacement 1/4"x37" Hydraulic Hose w/ Adapters (54, 60-1340 & 650)	1	$	45.15
012681	Replacement 1/4"x40" Hydraulic Hose w/ Adapters (T-100 & 60)	1	$	45.15
012682	Replacement 1/4"x44" Hydraulic Hose w/ Adapters (64)	1	$	47.20
012683	Replacement 1/4"x48" Hydraulic Hose w/ Adapters (72P/72S & 650)	1	$	47.20
012684	Replacement 1/4"x56" Hydraulic Hose w/ Adapters (80-1046)	1	$	47.20
012685	Replacement 1/4"x62" Hydraulic Hose w/ Adapters (86-1046)	1	$	49.30
012686	Replacement 1/4"x68" Hydraulic Hose w/ Adapters (91-1046)	1	$	49.30
012749	Replacement Flow Control (7/16 M x 7/16 F x 0.078) w/ Adapters for (1/4 M x 1/4 F x 0.078)	1	$	51.40
012910	Replacement 50" x 80" Steel Platform	1	$	1,880.00
012911	Replacement 60" x 80" Steel Platform	1	$	2,048.00
012912	Platform Link Kit	1	$	370.00
012913	Replacement Upper Arm w/Pins & Keepers (Left)	1	$	484.00
012914	Replacement Upper Arm w/Pins & Keepers (Right)	1	$	484.00
012915	Replacement 1-1/4" Lift Arm Pivot Pin w/ Keeper	2	$	48.60
012916	Replacement Power Unit Cover	1	$	106.00
012917	Replacement Platform Coil Springs	1	$	223.00
012918	Replacement 1-1/4" Frame Pin w/ Keepers	6	$	66.90
012919	Replacement 2 Ga. Copper Lug	6	$	4.15
012920	Replacement Upper Arm Tube Assembly	1	$	315.00
012921	Replacement Pump & Motor 3qt.** 2500/3000# Tuckunder	1	$	858.00
012922	Replacement Aluminum 25" Folding Extension with Cart Stop	1	$	1,959.00
012923	Replacement Lift Cylinder	2	$	567.00
012924	Replacement Lift Arm w/Pins & Keepers (Left)	1	$	377.00
012925	Replacement Lift Arm w/Pins & Keepers (Right)	1	$	377.00
012926	Replacement Tuckunder Latch Handle	1	$	37.05
012927	Replacement Hydraulic Hose-Lift Cylinder Long (Left)	1	$	77.75
012928	Replacement Hydraulic Hose-Lift Cylinder Short (Left)	1	$	75.25
012929	Replacement Hydraulic Hose-Lift Cylinder Long (Right)	1	$	51.85
012930	Replacement Lower Arm Link	1	$	167.00
012931	Replacement Hydraulic Hose-Pump/Lift Cylinder Short (Right)	5	$	44.95
012932	Replacement Tuckunder Circuit Board	1	$	202.00
012933	Replacement Plastic Tank (3qt.)	1	$	62.35
012934	Replacement 1-1/4" Lift Arm Pin w/Keeper	4	$	40.10
012935	Lift Cylinder Seal Repair Kit	2	$	120.00
012936	Lift Cylinder Shaft Repair Kit	2	$	615.00
012937	Replacement Latch Chain	1	$	25.05
012938	Replacement Roller Arm	1	$	116.50
012939	Replacement Aluminum 25" Folding Extension	1	$	1,457.00
012940	Replacement Aluminum 30" Folding Extension	1	$	1,723.00
012941	Replacement Roller Arm Wheel Kit	1	$	26.80
012942	Replacement 94" Standard Bed Extension	1	$	907.00
012943	Replacement 94" Heavy Bed Extension	1	$	1,077.00
012944	Replacement 100" Standard Bed Extension	1	$	1,032.00
012945	Replacement 100" Heavy Bed Extension	1	$	1,201.00
012946	Replacement Bed Extension Brace	2	$	55.80
012947	Replacement Aluminum 30" Folding Extension with Cart Stop	1	$	2,225.00
012948	Replacement Bed Extension Step	2	$	49.50
012950	Replacement Platform Shim Kit	1	$	17.10
012952	Replacement Dock Bumper	2	$	75.20
012953	Replacement Flipper Torsion Spring Kit (50" Steel)	1	$	33.65
012954	Replacement Flipper Torsion Spring Kit (60" Steel)	1	$	95.85
012955	Replacement Snubber Kit	1	$	89.05
012959	Replacement 1/4"x44" Hydraulic Hose w/ Adapters (64-1346-1646SB)	1	$	47.20
012960	Replacement 1/4"x48" Hydraulic Hose w/ Adapters (72-1348-1650)	1	$	47.20
012961	Replacement 1/4"x56" Hydraulic Hose w/ Adapters (80-1348-1650)	1	$	47.20
012962	Replacement 1/4"x62" Hydraulic Hose w/ Adapters (86-1348-1650)	1	$	49.30

012963	Replacement 1/4"x68" Hydraulic Hose w/ Adapters (91-1348-1650)	1	$	49.30
012966	Replacement Flow Control Complete (9/16" M x 7/16" F x 0.078") w/ Adapters for (3/8" M x 1/4" F x 0.078")	1	$	51.40
013073	Replacement 90 Degree Elbow (Male 7/16 ORB x Female 7/16 ORB)	1	$	10.55
013091	TA (89)35+12 Replacement EA Platform	1	$	2,764.00
013092	TA (89)35+12 Replacement EA Platform w/Cart Stop	1	$	3,265.00
013093	TA (89)35+12 Replacement EA Platform w/Bolt On Taper	1	$	2,883.00
013094	TA (89)35+12 Replacement EA Platform w/Cart Stop and Bolt On Taper	1	$	3,384.00
013095	SC (89)35+12 Replacement EA Platform	1	$	2,764.00
013096	SC (89)35+12 Replacement EA Platform w/Cart Stop	1	$	3,265.00
013097	SC (89)35+12 Replacement EA Platform w/Bolt On Taper	1	$	2,883.00
013098	SC (89)35+12 Replacement EA Platform w/Cart Stop and Bolt On Taper	1	$	3,384.00
013099	TA (89)55+12 Replacement EA Platform	1	$	3,184.00
013100	TA (89)55+12 Replacement EA Platform w/Cart Stop	1	$	3,685.00
013101	TA (89)55+12 Replacement EA Platform w/Bolt On Taper	1	$	3,303.00
013102	TA (89)55+12 Replacement EA Platform w/Cart Stop and Bolt On Taper	1	$	3,804.00
013103	Replacement Box Cover (89)TX w/Alarm & Lights(TA) (SPEC GATE ONLY)	1	$	666.00
013108	Rail(AB) Replacement Platform Chain (37+1 Links) (TX)	2	$	80.30
013109	47" Replacement TA Slider w/Rollers-Left(TX)	1	$	549.00
013110	47" Replacement TA Slider w/Rollers-Right(TX)	1	$	549.00
013111	47" Replacement Self Close Slider w/Rollers-Left(TX)	1	$	549.00
013182	Replacement Rear Cover Chevy	1	$	88.95
013265	Replacement 1350 G2 Pump & Motor Unit (2300psi)	1	$	522.00
013267	Replacement Auxiliary Hand Pump & Motor 2600psi	1	$	627.00
013268	M319 Replacement Pump & Motor (2100psi) 3qt. 3-Post	1	$	522.00
013269	M319 Replacement Pump & Motor (2100psi) 3qt. 4-Post	1	$	522.00
013357	Platform Hold Down Kit	1	$	262.00
013360	Replacement Flow Control W/ O-ring (G2) (With Adaptor)	2	$	43.00
013370	Replacement Leaf Chain 327 Pitch - Driver's Side (AB)	1	$	745.00
013384	Repair Up Stop Push off Assembly (Cantilever)	1	$	57.40
013553	47" Replacement Self Close Slider w/Rollers-Right(TX)	1	$	549.00
013554	Replacement LED License Plate Light	1	$	26.80
013555	Replacement Box Cover (89)TX w/Lights(TA) (SPEC GATE ONLY)	1	$	589.00
013556	Replacement Self Close Box Cover (89)TX w/Alarm & Lights	1	$	666.00
013557	Replacement Self Close Box Cover (89)TX w/Lights	1	$	589.00
013558	Replacement Raise Solenoid-4 Post	1	$	58.45
013559	Replacement Compact Fixed Control	1	$	223.00
013560	Replacement 2 Ga. Single Wire Cables w/Lugs-35 ft. Red/30 ft. Black	1	$	262.00
013561	Replacement Bearing Pad Set W/ Rollers (TX)	2	$	214.00
013562	295 Pitch Replacement Roller Chain Above Bed Pass. Side(TX)	1	$	241.00
013563	Replacement Alum. Roller Chain Cover(TX)	2	$	27.25
013564	Replacement Alum AB Sprocket Assembly-R(TX)	1	$	61.10
013566	Repair Cartstop Torsion Spring Kit (in taper)	1	$	41.70
013568	Replacement Left Cartstop Assembly (73) w/Spring (in taper)	1	$	162.00
013569	Replacement Left Cartstop Assembly (79) w/Spring (in taper)	1	$	165.00
013570	Replacement Left Cartstop Assembly (85) w/Spring (in taper)	1	$	167.00
013571	Replacement Left Cartstop Assembly (89) w/Spring (in taper)	1	$	169.00
013572	Replacement Left Cartstop Assembly (95) w/Spring (in taper)	1	$	174.00
013573	Replacement Right Cartstop Assembly (73) w/Spring (in taper)	1	$	162.00
013574	Replacement Right Cartstop Assembly (79) w/Spring (in taper)	1	$	165.00
013575	Replacement Right Cartstop Assembly (85) w/Spring (in taper)	1	$	167.00
013576	Replacement Right Cartstop Assembly (89) w/Spring (in taper)	1	$	169.00
013577	Replacement Right Cartstop Assembly (95) w/Spring (in taper)	1	$	174.00
013599	Replacement Latch Flipper Wear Plate	1	$	18.55
013627	(92) G2 33+6" Bargrate Replacement Platform	1	$	1,015.00
013632	60-50 G2 Replacement Sub Assembly	1	$	360.00
013633	60-50 G2 Replacement Upper Arm Assembly	1	$	540.00
013638	Replacement Alum AB Sprocket Assembly-L(TX)	1	$	61.10
013639	Replacement Alum Platform Self Close Arm Kit (TX)	1	$	88.35
013640	(TX)Replacement Self-Close Safety Trip Bar-81-1/4"	1	$	81.60
013641	(TX)Replacement Safety Trip Bar-83-1/4"(TA) (SPEC GATE ONLY)	1	$	81.60
013642	Replacement Platform Stop Block Kit (TX)	1	$	20.70
013643	(89) 12" Rep EA Bolt On Taper w/CS (TX)	1	$	946.00
013644	(89) 12" Rep EA Bolt On Taper (TX)	1	$	445.00
013645	1/2"SQ. Torsion Spring Kit Self Close(TX)	1	$	273.00
013646	5/8"SQ. Torsion Spring Kit (TX)	1	$	273.00
013647	(89) Dual Torsion Spring Kit (TX)	1	$	273.00
013649	35+6TP, 33+6TT, & 33+6BG Platform Replacement Chain	2	$	50.70
013650	Replacement 48" EA Platform Chain	2	$	52.85

013651	41+6TP Replacement Platform Chain	2	$	62.50
013661	Replacement Cantilever Nissan NV Bridge	1	$	336.00
013662	Replacement Box Cover (60G2)	1	$	87.10
013666	Replacement Rear Cover Nissan	1	$	88.95
013708	License Plate Bracket with Light	1	$	63.00
013744	Replacement Steel Box Cover w/Lights (73)(N) LED	1	$	452.00
013745	Replacement Steel Box Cover w/Lights (79)(N) LED	1	$	461.00
013746	Replacement Steel Box Cover w/Lights (85)(N) LED	1	$	483.00
013747	Replacement Steel Box Cover w/Lights (89)(N) LED	1	$	519.40
013748	Replacement Steel Box Cover w/Lights (95)(N) LED	1	$	546.00
013805	74 Replacement Sub Assembly	1	$	308.00
013822	TA (85)35+12 Replacement EA Platform w/Bolt On Taper	1	$	2,839.00
013823	Replacement Self Close Latch Flipper	1	$	13.30
013824	Replacement Self Close Box Cover (85) w/Alarm	1	$	647.00
013825	Replacement PS Self Close Latch (TX)	1	$	134.00
013826	329 Pitch Replacement Roller Chain (85TX)	1	$	267.00
013827	Replacement Safety Trip Bar-79-1/4" (85)	1	$	81.60
013838	5/8"SQ. Torsion Spring Kit (85)	1	$	273.00
013839	(85) 12" Rep EA Bolt On Taper W/CS (TX)	1	$	946.00
013929	(87) G2 33+6" Bargrate Replacement Platform	1	$	1,001.00
013930	Replacement 50" x 80" Aluminum Platform with Cart Stop	1	$	3,556.00
013931	Replacement 60" x 80" Aluminum Platform with Cart Stop	1	$	4,018.00
013932	Replacement 50" x 80" Aluminum Platform	1	$	3,055.00
013933	Replacement 60" x 80" Aluminum Platform	1	$	3,517.00
014041	Replacement Passive Latch	1	$	52.10
014042	Replacement License Plate Light	1	$	31.00
014043	(74) 37" Replacement Extruded Aluminum Platform	1	$	1,368.00
014106	Replacement Cantilever Pump Box (18-13/16")	1	$	131.00
014107	Replacement Cantilever Pump Box (18-13/16") Cover Transit	1	$	46.90
014108	Replacement 1330 Cantilever Pump & Motor Unit (2750psi) (18-13/16" Pump Box)	1	$	1,053.00
014114	Cantilever Replacement Tension Arm w/Pins & Keepers (Left) Transit	1	$	242.00
014115	Replacement Cantilever License Plate Bracket (Sprinter) Side Plate Mount	1	$	59.70
014116	Replacement Cantilever Stabilizer Tube (Transit)	1	$	61.20
014117	Cantilever Replacement Tension Arm w/Pins & Keepers (Right) Transit	1	$	242.00
014194	Replacement 60" EA Flipper Torsion Spring Kit(TKT)	1	$	64.40
014219	(92) G2 33+6" Tommy Traction Replacement Platform	1	$	917.00
014257	Replacement STT W/Backup LED Light W/Grommet (12VDC)	2	$	64.90
014258	Replacement STT Red Light W/Grommet (12VDC)	2	$	64.90
014268	G2 Low Profile Replacement Latch Kit (Model 73-92 & EA65)	2	$	34.25
014327	Replacement Left Cart Stop	1	$	174.00
014328	Replacement Right Cart Stop	1	$	174.00
014335	Replacement 30" EA Main Platform	1	$	2,405.00
014336	Replacement 25" EA Main Platform	1	$	2,176.00
014337	Replacement Treadplate 25" Folding Extension	1	$	689.00
014338	Replacement Treadplate 30" Folding Extension	1	$	846.00
014339	Replacement 25" Treadplate Main Platform	1	$	1,068.00
014340	Replacement 30" Treadplate Main Platform	1	$	1,163.00
014348	Replacement Power Unit Cover Seal	1	$	10.90
014349	Replacement Power Unit Cover Latch	1	$	8.40
014436	Replacement Chain-up Feature	1	$	26.65
014520	Replacement 650 Pump Box (only) Gate Mount	1	$	38.35
014530	Replacement Rail Chain Cover AB	2	$	20.50
014538	EA Driver's Side Latch Kit (swing away)(74)	1	$	36.60
014539	EA Passenger's Side Latch Kit (74)	1	$	20.50
014540	Replacement Primary Cart Stop	1	$	125.00
014541	Replacement Secondary Cart Stop	1	$	125.00
014542	Removable Cart Stop Torsion Spring Kit (in taper)	2	$	29.40
014543	Removable Cart Stop Replacement Hinge Kit (in taper)	2	$	30.95
014544	Replacement Rail Cart Stop Latch Kit (in taper)	2	$	19.90
014584	Replacement Box Cover (74)	1	$	45.55
014598	Replacement Cantilever Ford Transit Bridge	1	$	336.00
014599	Replacement Rear Cover Ford Transit	1	$	88.95
014605	Replacement 24V Pump & Motor 3qt.** 2500/3000# Tuckunder	1	$	980.00
014612	(87) G2 33+6" Tommy Traction Replacement Platform	1	$	900.00
014674	Replacement Limit Switch Wire Harness(Cantilever)	1	$	45.80
014675	Replacement Toggle Switch Wire Harness (Cantilever)	1	$	55.80
014678	Replacement 50" EA Platform Support Kit(TKT)	1	$	347.00
014679	Replacement 60" EA Platform Support Kit(TKT)	1	$	347.00

Tommy Gate Distributor Liftgate Price List
Woodbine Manufacturing Company
Effective March 1, 2016
1.800.LIFTGATE

Model Number	Load Area	Taper	Travel	Gate Weight	Capacity	MSRP
Full-Size Pickup - G2 Series						
G2-54-7542 TP38[1]	49 x 38	4	42	421	750	$ 2,378
G2-54-7542 EA38[1]	50 x 38	6	42	369	750	$ 3,025
G2-60-1342 TP27	55 x 27	4	42	438	1300	$ 1,989
G2-60-1342 TP38	55 x 38	4	42	478	1300	$ 2,174
G2-60-1342 TP42	55 x 42	7	42	503	1300	$ 2,256
G2-60-1342 TT27	55 x 27	4	42	439	1300	$ 2,131
G2-60-1342 EA27	55 x 27	6	42	395	1300	$ 2,657
G2-60-1342 EA38	55 x 38	6	42	421	1300	$ 2,822
G2-60-1342 EA48[2]	55 x 48	6	42	442	1300	$ 3,113
G2-60-1342 BG27	55 x 27	4	42	445	1300	$ 2,241
G2-60-1542 TP27	55 x 27	4	42	438	1500	$ 2,175
G2-60-1542 TP38	55 x 38	4	42	478	1500	$ 2,359
G2-60-1542 TP42	55 x 42	7	42	503	1500	$ 2,440
G2-60-1542 TT27	55 x 27	4	42	439	1500	$ 2,317
G2-60-1542 EA27	55 x 27	6	42	395	1500	$ 2,844
G2-60-1542 EA38	55 x 38	6	42	421	1500	$ 3,006
G2-60-1542 EA48[2]	55 x 48	6	42	442	1500	$ 3,302
G2-60-1542 BG27	55 x 27	4	42	445	1500	$ 2,427

Notes:
1. G2-54-7542 models are mid-size pickup applications and are sold with an included light kit. Not compatible with all options, contact factory for more information.
2. EA48 platform extends 10 inches above top of liftgate mainframe when closed.

Options	Description	MSRP
Bolt-on Light Kit (T-57)	3-light kit, works with 2 or 3-light systems (two red, one white each side)	$ 290
Bolt-on LED Light Kit (T-57L)	3-light kit, works with 2 or 3-light systems (two red, one white each side)	$ 396
Remote Pendant Control	in place of standard curb-side fixed control	$ 156
Dual Controls	standard fixed control + remote pendant control	$ 290
Rear Camera & Sensor Bar[3]	repositions the rear camera and sensors while retaining function	$ 68
Galvanizing Option[4]	a high-quality, "hot dipped" metallic zinc finish to prevent corrosion	$ 698
Rubber Platform Bumpers	set of four (one-piece platform), set of six (two-piece platform)	$ 30
In-cab, Shut-off Switch	disables power to the liftgate from within the truck cab	$ 48
Folding Tire Rack	specify hinged side, not available for two-piece platforms	$ 214
Extra Bracket Kit	top bracket and gussets only (one set included with liftgate)	$ 141
Extended Warranty	additional protection beyond the standard one- or two-year warranty	$ 160
Winter Grade Hydraulic Fluid	increases consistency of motion in cold climates	$ 35

Notes:
3. Rear Camera & Sensor Bars are only available for newer model pickups. Contact factory for more information.
4. Galvanizing Option may increase production time and is not available for Steel Treadplate platforms.

Tommy Gate Distributor Liftgate Price List
Woodbine Manufacturing Company
Effective March 1, 2016
1.800.LIFTGATE

Model Number	Load Area	Taper	Travel	Gate Weight	Capacity	MSRP
Full-Size Pickup - Original Series						
60-1040 TP27	58 x 27	none	40	365	1000	$1,888
60-1040 TP38	58 x 38	4	40	420	1000	$2,087
60-1040 TT27	58 x 27	none	40	360	1000	$2,041
60-1040 EA39	55 x 39	6	40	385	1000	$2,681

Options	Description	MSRP
2-light Light Kit	2-light add-on system (T-64) (one red, one white each side)	$195
3-light Light Kit	3-light add-on system (T-54) (one red, one white each side)	$245
2-light, LED Light Kit	2-light add-on system (T-64L) (one red, one white each side)	$301
3-light, LED Light Kit	3-light add-on system (T-54L) (one red, one white each side)	$365
Remote Pendant Control	in place of standard curb-side fixed control	$156
Dual Controls	standard fixed control + remote pendant control	$290
Rear Camera & Sensor Bar[1]	repositions the rear camera and sensors while retaining functionality	$68
Rubber Platform Bumpers	set of four (one-piece platform), set of six (two-piece platform)	$30
Folding Tire Rack	specify hinged side, not available for two-piece platforms	$209
In-cab, Shut-off Switch	disables power to the liftgate from within the truck cab	$48
Extra Bracket Kit	top bracket and gussets only (one set included with liftgate)	$141
Grip-style Tape Kit	for smooth steel platforms (2002 and older)	$62
Winter Grade Hydraulic Fluid	increases consistency of motion in cold climates	$35

Notes:
1. Rear Camera & Sensor Bars are only available for newer model pickups. Contact factory for more information.

Tommy Gate Distributor Liftgate Price List
Woodbine Manufacturing Company
Effective March 1, 2016
1.800.LIFTGATE

Model Number	Load Area	Taper	Travel	Gate Weight	Capacity	MSRP
Compact Pickup - Original Series						
MINI-500 TP	46 x 31	4	34	340	500	$1,949
MINI-500 EA	43 x 33	4	34	325	500	$2,591
MINI TP	46 x 31	4	34	340	1000	$1,949
MINI 54 TP	52 x 31	4	34	370	1000	$2,007
DAKOTA TP	52 x 31	4	34	370	1000	$2,007
TUNDRA TP	58 x 31	4	34	390	1000	$2,007
54-1034 TP	52 x 31	4	34	370	1000	$2,007
MINI EA	43 x 33	4	34	325	1000	$2,591
MINI 54 EA	49 x 33	4	34	355	1000	$2,644
DAKOTA EA	49 x 33	4	34	355	1000	$2,644
TUNDRA EA	55 x 33	4	34	375	1000	$2,644
54-1034 EA	49 x 33	4	34	355	1000	$2,644

Options	Description	MSRP
2-light Light Kit	2-light add-on system (T-64) (one red, one white each side)	$195
2-light, LED Light Kit	2-light add-on system (T-64L) (one red, one white each side)	$301
Remote Pendant Control	in place of standard curb-side fixed control	$156
Dual Controls	standard fixed control + remote pendant control	$290
Rubber Platform Bumpers	set of six	$30
In-cab, Shut-off Switch	disables power to the liftgate from within the truck cab	$48
Extra Bracket Kit	top bracket and gussets only (one set included with liftgate)	$141
Grip-style Tape Kit	for smooth steel platforms (2002 and older)	$62
Winter Grade Hydraulic Fluid	increases consistency of motion in cold climates	$35

Tommy Gate Distributor Liftgate Price List
Woodbine Manufacturing Company
Effective March 1, 2016
1.800.LIFTGATE

Model Number	Load Area	Taper	Travel	Gate Weight	Capacity	MSRP
Service & Utility Body - G2 Series	Models for Service Bodies with 48-inch Opening					
G2-54-1342 TP27	49 x 27	4	42	415	1300	$1,989
G2-54-1342 TP38	49 x 38	4	42	453	1300	$2,174
G2-54-1342 TP42	49 x 42	7	42	477	1300	$2,256
G2-54-1342 TT27	50 x 27	4	42	416	1300	$2,131
G2-54-1342 EA27	49 x 27	6	42	375	1300	$2,657
G2-54-1342 EA38	49 x 38	6	42	399	1300	$2,822
G2-54-1342 EA48[1]	49 x 48	6	42	419	1300	$3,113
G2-54-1342 BG27	50 x 27	4	42	422	1300	$2,241
G2-54-1642 TP27	49 x 27	4	42	415	1600	$2,175
G2-54-1642 TP38	49 x 38	4	42	453	1600	$2,359
G2-54-1642 TP42	49 x 42	7	42	477	1600	$2,440
G2-54-1642 TT27	50 x 27	4	42	416	1600	$2,317
G2-54-1642 EA27	49 x 27	6	42	375	1600	$2,844
G2-54-1642 EA38	49 x 38	6	42	399	1600	$3,006
G2-54-1642 EA48[1]	49 x 48	6	42	419	1600	$3,302
G2-54-1642 BG27	50 x 27	4	42	422	1600	$2,427

Notes:
1. EA48 Platform extends 10" above liftgate mainframe when closed

Additional Body Sizes

Body Opening	Model	Description	MSRP
54"	60	55" Load Area width	

Options	Description	MSRP
Bolt-on Light Kit	3-light kit, 2 or 3-light systems (T-57) (two red, one white each side)	$290
Bolt-on LED Light Kit	3-light kit, 2 or 3-light systems (T-57L) (two red, one white each side)	$396
Remote Pendant Control	in place of standard curb-side fixed control	$156
Dual Controls	standard fixed control + remote pendant control	$290
Galvanizing Option[2]	a high-quality, "hot dipped" metallic zinc finish to preven corrosion	$698
Rubber Platform Bumpers	set of four (one-piece platform), set of six (two-piece platform)	$30
In-cab, Shut-off Switch	disables power to the liftgate from within the truck cab	$48
Folding Tire Rack	specify hinged side, not available for two-piece platforms	$214
Extra Bracket Kit	top bracket and gussets only (one set included with liftgate)	$141
Extended Warranty	additonal protection beyond standard one- or two-year warranty	$160
Winter Grade Hydraulic Fluid	increases consistency of motion in cold climates	$35

Notes:
2. Galvanizing Option is not available for Steel Treadplate platforms. May increase lead time.

Tommy Gate Distributor Liftgate Price List
Woodbine Manufacturing Company
Effective March 1, 2016
1.800.LIFTGATE

Model Number	Load Area	Taper	Travel	Gate Weight	Capacity	MSRP
Service & Utility Body - Original Series	Models for Service Bodies with 48-inch Opening					
54-1040 TP27	52 x 27	none	40	335	1000	$1,888
54-1040 TP38	52 x 38	4	40	385	1000	$2,087
54-1040 TT27	52 x 27	none	40	330	1000	$2,041
54-1040 EA39	49 x 39	6	40	355	1000	$2,681

Additional Body Sizes

Body Opening	Model	Description	MSRP
54"	60SB	55" Load Area width	

Notes:
1. 64SB platforms, options, and dimensions similar to Flatbed, Stake, and Van Original Series models. Contact factory for details and prices.

Options	Description	MSRP
2-light Light Kit	2-light add-on system (T-64) (one red, one white each side)	$195
2-light, LED Light Kit	2-light add-on system (T-64L) (one red, one white each side)	$301
Remote Pendant Control	in place of standard curb-side fixed control	$156
Dual Controls	standard fixed control + remote pendant control	$290
Rubber Platform Bumpers	set of four (one-piece platform), set of six (two-piece platform)	$30
In-cab, Shut-off Switch	disables power to the liftgate from within the truck cab	$48
Folding Tire Rack	specify hinged side, not available for two-piece platforms	$214
Extra Bracket Kit	top bracket and gussets only (one set included with liftgate)	$141
Grip-style Tape Kit	for smooth steel platforms (2002 and older)	$62
Winter Grade Hydraulic Fluid	increases consistency of motion in cold climates	$35

Tommy Gate Distributor Liftgate Price List
Woodbine Manufacturing Company
Effective March 1, 2016
1.800.LIFTGATE

Model Number	Load Area	Bed Heights[1]	Gate Weight[2]	Capacity	MSRP
TKT Models (Dual-Cylinder, Power-Down, Self-Leveling)					
TKT-80-25 TP50	80 x 50	40 - 54	887	2500	$5,675
TKT-80-25 TP60	80 x 60	45 - 54	980	2500	$5,834
TKT-80-25 EA50	80 x 50	40 - 54	816	2500	$6,915
TKT-80-25 EA60	80 x 60	45 - 54	866	2500	$7,185
TKT-80-30 TP50	80 x 50	40 - 54	887	3000	$5,968
TKT-80-30 TP60	80 x 60	45 - 54	980	3000	$6,127
TKT-80-30 EA50	80 x 50	40 - 54	816	3000	$7,208
TKT-80-30 EA60	80 x 60	45 - 54	866	3000	$7,478

Notes:
1. Minimum bed heighjt range is **laden**. Maximum bed height range is **unladen**.
2. Must add bed extension weight for total installed gate weight.

Bed Extension Options

Body Size	Bed Extension Type	Weight	Description	MSRP
96"	Standard	276	3/16-inch thick steel construction	-
102"	Standard	283	3/16-inch thick steel construction	plus $126
96"	Heavy Duty	334	3/8-inch thick steel construction	plus $171
102"	Heavy Duty	341	3/8-inch thick steel construction	plus $298

Notes:
3. Bed extension prices are listed for new liftgate purchases. Prices differ when purchased separately.
4. TKT Models ship with fully-assmbled liftgate, bed extension, steps, and bumpers.
5. All bed extensions come with adjustable steps and rubber dock bumpers.

Options	Description	MSRP
Standard		
Rubber Dock Bumpers	protect the bed extension from direct contact with loading dock surface	-
Underride Impact Guard	a low, full-width guard bar protects from rear vehicle underrida	-
Platform Power Down	offers consistent platform action both upwards and downwards	-
Low-Profile Toggle Control	with inactivity shut-off to guard against unauthorized use	-
Snubber Kit	secures the platform when stored	-
Standard Power Cable	38-foot, 2-gauge, full-length power and ground	-
Additional		
Split Cart Stops[6]	secure wheeled cargo, *aluminum platforms only*	$508
2-light, LED Light Kit	2-light add-on system (T-80) (one red, one white each side)	$266
Dual Controls	standard fixed control + remote pendant control	$289
Galvanizing Option[7]	a high-quality, "hot dipped" metallic zinc finish to prevent corrosion	$698
Extended Power Cable	41-foot cable, 2-gauge, full-length power and ground	$38

24-volt System	compatible with vehicles running a 24-volt system	$96
Extended Warranty	additional protection beyond standard one- or two-year warranty	$282
License Plate Mount	bracket plate holder with light	$64
In-Line Power Shut-Off	disables power to the liftgate along the power line	$115
In-Cab, Shut-Off Switch	disables power to the liftgate from within the truck cab	$47

Notes:

6. Aluminum platforms lose 10 inches of loading depth when cart stops are deployed.
7. Suggested for use with aluminum platforms. May increase lead time.

Tommy Gate Distributor Liftgate Price List
Woodbine Manufacturing Company
Effective March 1, 2016
1.800.LIFTGATE

High-Cycle, Steel-Frame Models for 96" Wide Bodies

Model Number	Load Area	Taper	Travel	Gate Weight	Capacity	Width	MSRP
89-25 TP36	89 x 36	12	32 - 54	1040	2500	93-3/4	$5,007
89-25 TP42	89 x 42	12	32 - 54	1094	2500	93-3/4	$5,236
89-25 TP48	89 x 48	12	32 - 54	1147	2500	93-3/4	$5,464
89-25 EA55	89 x 55	12	32 - 54	968	2500	93-3/4	$6,454
89-30 TP36	89 x 36	12	32 - 54	1040	3000	93-3/4	$5,297
89-30 TP42	89 x 42	12	32 - 54	1094	3000	93-3/4	$5,525
89-30 TP48	89 x 48	12	32 - 54	1147	3000	93-3/4	$5,754
89-30 EA55	89 x 55	12	32 - 54	968	3000	93-3/4	$6,656

IMPORTANT
High-Cycle railgate models are intended for medium-duty application only.

Additional Body Sizes

Body Size	Model	Description	MSRP
90"	85	85" load width	
102"	95	95" load width	plus $572

Additional Aluminum Platform Depths

Option	Description	MSRP
5" aluminum extrusion	Extruded aluminum platforms are available in any depth 35" - 70", in 5" increments. Add price of extrusions needed to EA55 model price.	$156 per

Options	Description	MSRP
Recessed LED Light Kit	3-light kit (two red, one white each side)	$223
Split Cart Stops	located in platform taper, secures wheeled cargo	$508
Above-bed Travel	allows platform to travel above truck bed-height for dock loading	$256
Rubber Platform Bumpers	set of four or six, depending on platform	$30
Dual Controls	standard fixed control + remote pendant control	$290
Extended Warranty	additional protection beyond standard one- or two-year warranty	$282
In-cab, Shut-off Switch	disables power to the liftgate from within the truck cab	$48
Winter Grade Hydraulic Fluid	increases consistency of motion in cold climates	$35

IMPORTANT
Liftgate installation differs from standard railgate models. See instructions or call for details.

Tommy Gate Distributor Liftgate Price List
Woodbine Manufacturing Company
Effective March 1, 2016
1.800.LIFTGATE

Model Number	Load Area	Taper	Travel	Gate Weight	Capacity	Width	MSRP
Bi-Fold, High-Cycle Model for 96" Wide Bodies							
89-25 BF TP60	83 x 60	13	34 - 54	1320	2500	93-3/4	$7,680
89-25 BF TP70	83 x 70	13	34 - 54	1378	2500	93-3/4	$8,075
89-30 BF TP60	83 x 60	13	34 - 54	1320	3000	93-3/4	$7,970
89-30 BF TP70	83 x 70	13	34 - 54	1378	3000	93-3/4	$8,365
Bi-Fold, High-Cycle Model for 102" Wide Bodies							
95-25 BF TP60	89 x 60	13	34 - 54	1362	2500	99-3/4	$8,251
95-25 BF TP70	89 x 70	13	34 - 54	1420	2500	99-3/4	$8,648
95-30 BF TP60	89 x 60	13	34 - 54	1362	3000	99-3/4	$8,541
95-30 BF TP70	89 x 70	13	34 - 54	1420	3000	99-3/4	$8,937

NOTES
1. Minimum bed height range is **laden.** Maximum bed height range is **unladen**.
2. Standard, aluminum retention ramp serves as 13-inch, folding platform taper on Bi-Fold Railgate Models.

Options	Description	MSRP
Above-bed Travel	allows platform to travel above truck bed-height for dock loading	$256
Recessed LED Light Kit	3-light kit (two red, one white each side)	$223
Dual Controls	standard fixed control + remote pendant control	$290
Extended Warranty	additonal protection beyond standard one- or two-year warranty	$282
In-cab, Shut-off Switch	disables power to the liftgate from within the truck cab	$48
Winter Grade Hydraulic Fluid	increases consistency of motion in cold climates	$35

Tommy Gate Distributor Liftgate Price List
Woodbine Manufacturing Company
Effective March 1, 2016
1.800.LIFTGATE

Model Number	Load Area	Taper	Travel	Gate Weight	Capacity	Width	MSRP
Standard, Steel Frame Models for 96" Bodies							
89-16 TP37	89 x 37	6	32 - 54	810	1600	94	$3,157
89-16 TP42	89 x 42	6	32 - 54	860	1600	94	$3,392
89-16 EA55	89 x 55	12	32 - 54	715	1600	94	$4,205
89-20 TP37	89 x 37	6	32 - 54	810	2000	94	$3,384
89-20 TP42	89 x 42	6	32 - 54	860	2000	94	$3,624
89-20 EA55	89 x 55	12	32 - 54	715	2000	94	$4,429
89-20 GBR	89 x 30	12	32 - 54	805	2000	94	$4,217
Standard, Aluminum Frame Models for 96" Bodies							
A89-16 EA55	89 x 55	12	32 - 54	600	1600	96	$5,517
A89-20 EA55	89 x 55	12	32 - 54	600	2000	96	$5,737

Additional Body Sizes

Body Size	Model	Description	MSRP
80"	73	73" Load Area width	
85"	79	79" Load Area width	
90"	85	85" Load Area width	
102"	95	95" Load Area width	plus $572

Additional Aluminum Platform Depths

Option	Description	MSRP
5" aluminum extrusion	Extruded aluminum platforms are available in any depth 35" - 70", in 5" increments. Add price of extrusions needed to EA55 model price.	$156 per

Options	Description	MSRP
Above-bed Travel	allows platform to travel above truck bed-height for dock loading	$256
Recessed LED Light Kit	3-light kit (two red, one white each side)	$223
Split Cart Stops	located on flat loading surface, secures wheeled cargo	$508
Split Retention Ramps[2]	available for treadplate platforms only, secures wheeled cargo	$523
Rubber Platform Bumpers	set of four or six, depending on platform	$30
Dual Controls	standard fixed control + remote pendant control	$290
In-cab, Shut-off Switch	disables power to the liftgate from within the truck cab	$48
Torsion Bar[3]	in place of standard cam-arm system, when ordering liftgate	$0
Winter Grade Hydraulic Fluid	increases consistency of motion in cold climates	$35

Notes:
1. Self-close system not available for 65" or 70" EA platforms at 1600lb capacity.
2. Only available on Model 89 and Model 85. Retention ramps add 5" of loading depth to platform and include 12" aluminum taper.
3. Torsion bars are not available for some larger widths and platforms. Contact factory for more information.

Tommy Gate Distributor Liftgate Price List
Woodbine Manufacturing Company
Effective March 1, 2016
1.800.LIFTGATE

Model Number	Load Area	Taper	Travel	Gate Weight	Capacity	Width	MSRP
Dock-Friendly, Steel-Frame Models for 96" Wide Bodies							
89-16 RF 45-6	89 x 45	6	32 - 54	674	1600	94	$4,565
89-16 RF 45-12	89 x 45	12	32 - 54	688	1600	94	$4,565
89-16 RF 50-6	89 x 50	6	32 - 54	695	1600	94	$4,565
89-20 RF 45-6	89 x 45	6	32 - 54	674	2000	94	$4,787
89-20 RF 45-12	89 x 45	12	32 - 54	688	2000	94	$4,787
89-20 RF 50-6	89 x 50	6	32 - 54	695	2000	94	$4,787
Dock-Friendly, Aluminum-Frame Models for 96" Wide Bodies							
A89-16 RF 45-6	89 x 45	6	32 - 54	550	1600	96	$5,877
A89-16 RF 45-12	89 x 45	12	32 - 54	564	1600	96	$5,877
A89-16 RF 50-6	89 x 50	6	32 - 54	571	1600	96	$5,877
A89-20 RF 45-6	89 x 45	6	32 - 54	550	2000	96	$6,096
A89-20 RF 45-12	89 x 45	12	32 - 54	564	2000	96	$6,096
A89-20 RF 50-6	89 x 50	6	32 - 54	571	2000	96	$6,096

Additional Body Sizes

Body Size	Model	Description	MSRP
90"	85	85" Load Area width	
102"[1]	95	95" Load Area width	plus $572

Notes:
1. 102-inch width RF models (95) are not available in aluminum frame option.

Options	Description	MSRP
Recessed LED Light Kit	3-light kit (two red, one white each side)	$223
Split Cart Stops	located on flat loading surface, secures wheeled cargo	$508
Rubber Platform Bumpers	set of four or six, depending on platform	$30
Dual Controls	standard fixed control + remote pendant control	$290
In-cab, Shut-off Switch	disables power to the liftgate from within the truck cab	$48
Winter Grade Hydraulic Fluid	increases consistency of motion in cold climates	$35

Tommy Gate Distributor Liftgate Price List
Woodbine Manufacturing Company
Effective March 1, 2016
1.800.LIFTGATE

Model Number	Load Area	Taper	Travel	Gate Weight	Capacity	Width	MSRP
Flatbed, Stake & Van - G2 Series							
G2-92-1350 TP35	87 x 35	6	50	628	1300	92	$2,415
G2-92-1350 TP41	87 x 41	6	50	655	1300	92	$2,667
G2-92-1350 TT33	87 x 33	6	50	612	1300	92	$2,574
G2-92-1350 EA37	85 x 37	6	50	561	1300	92	$3,106
G2-92-1350 EA41	85 x 41	6	50	577	1300	92	$3,434
G2-92-1350 BG33	87 x 33	6	50	637	1300	92	$2,667
G2-92-1650 TP35	87 x 35	6	50	628	1600	92	$2,511
G2-92-1650 TP41	87 x 41	6	50	655	1600	92	$2,760
G2-92-1650 TT33	87 x 33	6	50	612	1600	92	$2,668
G2-92-1650 EA37	85 x 37	6	50	561	1600	92	$3,199
G2-92-1650 EA41	85 x 41	6	50	577	1600	92	$3,529
G2-92-1650 BG33	87 x 33	6	50	637	1600	92	$2,760

Additional Body Sizes

Body Size	Model	Description	MSRP
90"	87	80" Load Area width	
85"	81	75" Load Area width	
80"	73	66" Load Area width	
> 67"	65	60 Load Area width	
> 65"	60	55" Load Area width	

Options	Description	MSRP
Bolt-on Light Kit	3-light kit, 2 or 3-light systems (T-57) (two red, one white each side)	$290
Bolt-on LED Light Kit	3-light kit, 2 or 3-light systems (T-57L) (two red, one white each side)	$396
Remote Pendant Control	in place of standard curb-side fixed control	$156
Dual Controls	standard fixed control + remote pendant control	$290
Galvanizing Option[1]	a high-quality, "hot dipped" metallic zinc finish to prevent corrosion	$698
Rubber Platform Bumpers	set of four	$30
In-cab, Shut-off Switch	disables power to the liftgate from within the truck cab	$48
Folding Tire Rack	specify hinged side	$214
Extended Warranty	additional protection beyond standard one- or two-year warranty	$160
Winter Grade Hydraulic Fluid	increases consistency of motion in cold climates	$35

Notes:
1. Galvanizing option unavailable for Steel Treadplate platforms. May increase lead time.

Tommy Gate Distributor Liftgate Price List
Woodbine Manufacturing Company
Effective March 1, 2016
1.800.LIFTGATE

Model Number	Load Area	Taper	Travel	Gate Weight	Capacity	Body Width	MSRP
Flatbed, Stake & Van - LOW-PROFILE - G2 Series							
G2-65-1642 TP38	60 x 38	4	42	505	1600	67	$2,760
G2-73-1642 TP38	66 x 38	4	42	532	1600	80	$2,760
G2-81-1642 TP38	74 x 38	4	42	572	1600	85	$2,760
G2-87-1642 TP38	80 x 38	4	42	592	1600	90	$2,760
G2-92-1642 TP38	85 x 38	4	42	609	1600	96	$2,760
G2-65-1642 EA38	60 x 38	6	42	436	1600	67	$3,529
G2-73-1642 EA38	66 x 38	6	42	458	1600	80	$3,529
G2-81-1642 EA38	74 x 38	6	42	489	1600	85	$3,529
G2-87-1642 EA38	80 x 38	6	42	507	1600	90	$3,529
G2-92-1642 EA38	85 x 38	6	42	523	1600	96	$3,529

Notes:
1. Low-Profile G2 Models are a specialized application recommended for specific vehicle requirements.

Options	Description	MSRP
Bolt-on Light Kit	3-light kit, 2 or 3-light systems (T-57) (two red, one white each side)	$290
Bolt-on LED Light Kit	3-light kit, 2 or 3-light systems (T-57L) (two red, one white each side)	$396
Remote Pendant Control	in place of standard curb-side fixed control	$156
Dual Controls	standard fixed control + remote pendant control	$290
Galvanizing Option[1]	a high-quality, "hot dipped" metallic zinc finish to prevent corrosion	$698
Rubber Platform Bumpers	set of four (one-piece platform), set of six (two-piece platform)	$30
Extended Warranty	additional protection beyond standard one- or two-year warranty	$160
In-cab, Shut-off Switch	disables power to the liftgate from within the truck cab	$48
Winter Grade Hydraulic Fluid	increases consistency of motion in cold climates	$35

Notes:
1. Galvanizing Option is unavailable for Steel Treadplate platforms. May increase lead time.

Tommy Gate Distributor Liftgate Price List
Woodbine Manufacturing Company
Effective March 1, 2016
1.800.LIFTGATE

Model Number	Load Area	Taper	Travel	Gate Weight	Capacity	Width	MSRP
Flatbed, Stake & Van - Original Series							
91-1050 TP36	87 x 36	6	50	585	1000	91	$2,272
91-1050 TP42	87 x 42	6	50	610	1000	91	$2,588
91-1050 TT34	87 x 34	6	50	570	1000	91	$2,424
91-1050 EA37	85 x 37	6	50	525	1000	91	$3,070
91-1050 EA42	85 x 42	6	50	540	1000	91	$3,425
91-1050 BG34	87 x 34	6	50	585	1000	91	$2,542
91-1350 TP36	87 x 36	6	50	585	1300	91	$2,418
91-1350 TP42	87 x 42	6	50	610	1300	91	$2,737
91-1350 TT34	87 x 34	6	50	570	1300	91	$2,572
91-1350 EA37	85 x 37	6	50	525	1300	91	$3,222
91-1350 EA42	85 x 42	6	50	540	1300	91	$3,577
91-1350 BG34	87 x 34	6	50	585	1300	91	$2,690
91-1650 TP36	87 x 36	6	50	585	1600	91	$2,505
91-1650 TP42	87 x 42	6	50	610	1600	91	$2,819
91-1650 TT34	87 x 34	6	50	570	1600	91	$2,658
91-1650 EA37	85 x 37	6	50	525	1600	91	$3,294
91-1650 EA42	85 x 42	6	50	540	1600	91	$3,650
91-1650 BG34	87 x 34	6	50	585	1600	91	$2,776

Additional Body Sizes

Body Size	Model	Description	MSRP
90"	86	80" Load Area width	
85"	80	75" Load Area width	
80"	72	66" Load Area width	

Options	Description	MSRP
2-light, Light Kit	2-light add-on system (T-64) (one red, one white each side)	$195
3-light Light Kit	3-light add-on system (T-54) (one red, one white each side)	$245
2-light, LED Light Kit	2-light add-on system (T-64L) (one red, one white each side)	$301
3-light, LED Light Kit	3-light add-on system (T-54L) (one red, one white each side)	$365
Folding Tire Rack	specify hinged side, not available for two-piece platforms	$214
Remote Pendant Control	in place of standard curb-side fixed control	$156
Dual Controls	standard fixed control + remote pendant control	$290
Rubber Platform Bumpers	set of four (one-piece platform), set of six (two-piece platform)	$30
In-cab, Shut-off Switch	disables power to the liftgate from within the truck cab	$48
Grip-style Tape Kit	for smooth steel platforms (2002 and older)	$62
Winter Grade Hydraulic Fluid	increases consistency of motion in cold climates	$35

Tommy Gate Distributor Liftgate Price List
Woodbine Manufacturing Company
Effective March 1, 2016
1.800.LIFTGATE

Model Number	Load Area	Taper	Travel	Gate Weight	Capacity	MSRP

Lift-N-Dump - G2 Series (for Bodies with 83" - 88" Wide Openings)

G2-92-1650 LD33	83 x 33	6	50	682	1600	$2,989

Additional Body Sizes

Body Size	Model	Description	MSRP
78" - 83"	87	78" Load Area width	
69" - 78"	81	73" Load Area width	
64" - 69"	73	64" Load Area width	

Options	Description	MSRP
Bolt-on Light Kit	3-light kit, 2 or 3-light systems (T-57) (two red, one white each side)	$290
Bolt-on LED Light Kit	3-light kit, 2 or 3-light systems (T-57L) (two red, one white each side)	$396
Remote Pendant Control	in place of standard curb-side fixed control	$156
Dual Controls	standard fixed control + remote pendant control	$290
Rubber Platform Bumpers	set of four	$30
Extended Warranty	additional protection beyond standard one- or two-year warranty	$160
In-cab, Shut-off Switch	disables power to the liftgate from within the truck cab	$48
Winter Grade Hydraulic Fluid	increases consistency of motion in cold climates	$35

Notes:
1. Use of a double-acting hoist is recommended. Using a single-acting hoist requires tie-down clamps.

Tommy Gate Distributor Liftgate Price List
Woodbine Manufacturing Company
Effective March 1, 2016
1.800.LIFTGATE

Model Number	Load Area	Depth	Travel	Gate Weight	Capacity	MSRP
Cantilever Series						
CVL-AA-1330 EF71	53 x 60	71	30	610	1300	$ 6,099
CVL-AA-1330 EF52	53 x 40	52	30	570	1300	$ 5,673
CVL-AB-1330 EF71	53 x 60	71	30	610	1300	$ 6,099
CVL-AB-1330 EF52	53 x 40	52	30	570	1300	$ 5,673
CVL-AC-1330 EF71	53 x 60	71	30	610	1300	$ 6,099
CVL-AC-1330 EF52	53 x 40	52	30	570	1300	$ 5,673
CVL-AD-1330 EF52	53 x 40	52	30	570	1300	$ 5,673
CVL-AE-1330 EF71	53 x 60	71	30	610	1300	$ 6,099
CVL-AE-1330 EF52	53 x 40	52	30	570	1300	$ 5,673
CVL-AH-1330 EF71	53 x 60	71	30	610	1300	$ 6,099
CVL-AH-1330 EF52	53 x 40	52	30	570	1300	$ 5,673
CVL-AF-1330 EF71	53 x 60	71	30	610	1300	$ 6,099
CVL-AF-1330 EF52	53 x 40	52	30	570	1300	$ 5,673
CVL-AG-1330 EF71	53 x 60	71	30	610	1300	$ 6,099
CVL-AG-1330 EF52	53 x 40	52	30	570	1300	$ 5,673

IMPORTANT

1. EF71 platforms are recommended for higher-roof van models only.
2. Installation may affect specific vehicle features suzh as rear sensors and back-up cameras.
3. Installation is not compatible with any form of towing hitch.
4. Installation requires the spare tire to be relocated.
5. Ram Promaster applications (AE & AH) require exhaust hanger modification.
6. Sprinter applications (AA & AB) may require exhaust hanger modification. (varies by model)
7. Mercedes-Benz requires the use of an auxillary battery for all liftgates installed on SPRINTER® vans.
8. Ford Transit "medium height" models are compatible with EF71 platform.
9. Some Ford Transit installations may require a separate connection point kit to be ordered from Ford. See Install Instructions or contact customer service.

Tommy Gate Distributor Liftgate Price List
Woodbine Manufacturing Company
Effective March 1, 2016
1.800.LIFTGATE

Model Number	Load Area	Taper	Travel	Gate Weight	Capacity	MSRP
Cargo Van - Original Series						
64P-1036 TP27	63 x 27	none	36	340	1000	$ 2,004
64P-1036 TP38	63 x 38	4	36	400	1000	$ 2,204
72P-1036 TP38	69 x 38	4	36	425	1000	$ 2,606
64P-1036 EA39	60 x 39	6	36	365	1000	$ 2,866
64P-1036 EA48	60 x 48	6	36	400	1000	$ 3,207
72P-1036 EA39	66 x 39	6	36	400	1000	$ 3,392
72P-1036 EA48	66 x 48	6	36	430	1000	$ 3,716

Required Light Kit (A light kit, sold separately, is required for above models)

Options	Description	MSRP
2-light Light Kit	2-light add-on system (T-64) (one red, one white each side)	$195
3-light Light Kit	3-light add-on system (T-54) (one red, one white each side)	$245
2-light, LED Light Kit	2-light add-on system (T-64L) (one red, one white each side)	$301
3-light, LED Light Kit	3-light add-on system (T-54L) (one red, one white each side)	$365

Options	Description	MSRP
Remote Pendant Control	in place of standard curb-side fixed control	$156
Dual Controls	standard fixed control + remote pendant control	$290
Rubber Platform Bumpers	set of four (one-piece platform), set of six (two-piece platform)	$30
In-cab, Shut-off Switch	disables power to the liftgate from within the truck cab	$48
Grip-style Tape Kit	for smooth steel platforms (2002 and older)	$62
Winter Grade Hydraulic Fluid	increases consistency of motion in cold climates	$35

IMPORTANT
1. Model 72P cannot be mounted on a SPRINTER body with a 118-inch wheelbase.
2. Model 64P & 72P liftgates cannot be mounted on cargo vans with a trailer hitch.
3. SPRINTER vans installed with a 72P will result in a "bump" in the threshold. This "bump" is the seal for the rear door and, as such, is part of the van.
4. 2009-2014 Ford vans should be ordered with a trailer wiring harness.

Tommy Gate Distributor Liftgate Price List
Woodbine Manufacturing Company
Effective March 1, 2016
1.800.LIFTGATE

Model Number	Load Area	Taper	Travel	Gate Weight	Capacity	MSRP
650 Series						
650	30 x 39	4	31.5	345	650	$2,607

Options	Description	MSRP
Grip-style Tape Kit	for smooth steel platforms (2002 and older)	$62

Notes:
1. If installing Model 650 in a van with rear air conditioning, contact the factory for additional mounting information.

2. 2007-present SPRINTER® models may be equipped with a rear step bumper that is not compatible with a Model 650 liftgate.

Tommy Gate Distributor Liftgate Price List
Woodbine Manufacturing Company
Effective May 1, 2016
1.800.LIFTGATE

Model Number	Load Area	Bed Heights	Gate Weight	Capacity	Width	MSRP
All-Aluminum Roller Railgate Models						
RTC-85-16 EA35	83 x 35	30 - 37	585	1600	92-1/2	$5,378
RTC-85-16 EA55	83 x 55	30 - 37	665	1600	92-1/2	$6,002
RTC-85-20 EA35	83 x 35	30 - 37	585	2000	92-1/2	$5,990
RTC-85-20 EA55	83 x 55	30 - 37	665	2000	92-1/2	$6,614
RTC-89-16 EA35	87 x 35	30 - 37	615	1600	96-1/2	$5,378
RTC-89-16 EA55	87 x 55	30 - 37	695	1600	96-1/2	$6,002
RTC-89-20 EA35	87 x 35	30 - 37	615	2000	96-1/2	$5,990
RTC-89-20 EA55	87 x 55	30 - 37	695	2000	96-1/2	$6,614

Additional Aluminum Platform Depths

Option	Description	MSRP
5" aluminum extrusion	Extruded aluminum platforms are available in any depth 35" - 55", in 5" increments. Add price of extrusions needed to EA35 model price.	$156 per

Dunnage Kit Options

	Description		
Kit # 13085	2-gauge, 2-wire, molded battery cables 33' length	+ maintenance manual kit	$141
Kit # 14084		+ maintenance manual kit & Cab Cut-off Switch Wiring Kit	$190
Kit # 12659		+ maintenance manual kit & pendant control & pendant supply cable	$432
Kit # 14085		+maintenance manual kit, Cab Cut-of Switch Wiring Kit, & pendant control & cable	$480
Kit # 13090	2-gauge, 2-wire, separate battery cables 35' (red) 30' (black)	+ maintenance manual kit	$141
Kit # 14087		+ maintenance manual kit & Cab Cut-off Switch Wiring Kit	$190
Kit # 13089		+ maintenance manual kit & pendant control & pendant supply cable	$432
Kit # 14086		+maintenance manual kit, Cab Cut-of Switch Wiring Kit, & pendant control & cable	$480

Notes

1. Dunnage kit is required for installation
2. Dunnage kits are available to be shipped in advance of liftgate
3. Dunnage kits are priced separately from liftgate

Options	Description	MSRP
Low-Profile Toggle Control	with inactivity shut-off to guard against unauthorized use	/
Recessed LED Light Kit	3-light kit (two red, one white, each side)	/
Torsion Bar	assists in manually opening/closing platform	/
Above-Bed Travel	allows platform to travel above truck bed-height for dock loading	/
Safety-Trip Bar	disengages lift when an object is detected between the rising platform and the liftgate mainframe	/
Bolt-on Taper	increases consistency of motion in cold climates	$281
Split Cart Stops	located in platform taper, secure wheeled cargo	$38
Dual Controls	standard fixed control + remote pendant control	$96
Back-Up Alarm	warns of proximity of rear of vehicle to solid objects	$47

Notes

1. Dual controls and back-up alarm are supplied with dunnage kit
2. Bolt-on installation requires an OEM channel that may need to be purchased separately

Model	Description	MSRP
G2-54-7542 TP38	G2 Series Compact Pickup, 54-inch Frame Width, 750lb Capacity, 38-inch Steel Treadplate Platform	$ 2,378
G2-54-7542 EA38	G2 Series Compact Pickup, 54-inch Frame Width, 750lb Capacity, 38-inch Extruded Aluminum Platform	$ 3,025
G2-60-1342 TP27	G2 Series Pickup, 61-inch Frame Width, 1300lb Capacity, 27-inch Steel Treadplate Platform	$ 1,989
G2-60-1342 TP38	G2 Series Pickup, 61-inch Frame Width, 1300lb Capacity, 38-inch Steel Treadplate Platform	$ 2,174
G2-60-1342 TP42	G2 Series Pickup, 61-inch Frame Width, 1300lb Capacity, 42-inch Steel Treadplate Platform	$ 2,256
G2-60-1342 TT27	G2 Series Pickup, 61-inch Frame Width, 1300lb Capacity, 27-inch Tommy Traction Platform	$ 2,131
G2-60-1342 EA27	G2 Series Pickup, 61-inch Frame Width, 1300lb Capacity, 27-inch Extruded Aluminum Platform	$ 2,657
G2-60-1342 EA38	G2 Series Pickup, 61-inch Frame Width, 1300lb Capacity, 38-inch Extruded Aluminum Platform	$ 2,822
G2-60-1342 EA48	G2 Series Pickup, 61-inch Frame Width, 1300lb Capacity, 48-inch Extruded Aluminum Platform	$ 3,113
G2-60-1342 BG27	G2 Series Pickup, 61-inch Frame Width, 1300lb Capacity, 27-inch Bar Grate Platform	$ 2,241
G2-60-1542 TP27	G2 Series Pickup, 61-inch Frame Width, 1500lb Capacity, 27-inch Steel Treadplate Platform	$ 2,175
G2-60-1542 TP38	G2 Series Pickup, 61-inch Frame Width, 1500lb Capacity, 38-inch Steel Treadplate Platform	$ 2,359
G2-60-1542 TP42	G2 Series Pickup, 61-inch Frame Width, 1500lb Capacity, 42-inch Steel Treadplate Platform	$ 2,440
G2-60-1542 TT27	G2 Series Pickup, 61-inch Frame Width, 1500lb Capacity, 27-inch Tommy Traction Platform	$ 2,317
G2-60-1542 EA27	G2 Series Pickup, 61-inch Frame Width, 1300lb Capacity, 27-inch Extruded Aluminum Platform	$ 2,844
G2-60-1542 EA38	G2 Series Pickup, 61-inch Frame Width, 1300lb Capacity, 38-inch Extruded Aluminum Platform	$ 3,006
G2-60-1542 EA48	G2 Series Pickup, 61-inch Frame Width, 1300lb Capacity, 48-inch Extruded Aluminum Platform	$ 3,302
G2-60-1542 BG27	G2 Series Pickup, 61-inch Frame Width, 1500lb Capacity, 27-inch Bar Grate Platform	$ 2,427
60-1040 TP27	Original Series Pickup, 61-inch Frame Width, 1000lb Capacity, 27-inch Steel Treadplate Platform	$ 1,888
60-1040 TP38	Original Series Pickup, 61-inch Frame Width, 1000lb Capacity, 38-inch Steel Treadplate Platform	$ 2,087
60-1040 TT27	Original Series Pickup, 61-inch Frame Width, 1000lb Capacity, 27-inch Steel Treadplate Platform	$ 2,041
60-1040 EA39	Original Series Pickup, 61-inch Frame Width, 1000lb Capacity, 27-inch Steel Treadplate Platform	$ 2,681
MINI-500 TP	Original Series Compact Pickup, 49-inch Frame Width, 500lb Capacity, 31-inch Steel Treadplate Platform	$ 1,847
MINI-500 EA	Original Series Compact Pickup, 49-inch Frame Width, 500lb Capacity, 33-inch Extruded Aluminum Platform	$ 2,490
54-0534 TP	Original Series Compact Pickup, 55-inch Frame Width, 500lb Capacity, 31-inch Extruded Aluminum Platform	$ 1,905
MINI TP	Original Series Compact Pickup, 49-inch Frame Width, 1000lb Capacity, 31-inch Steel Treadplate Platform	$ 1,949
MINI 54 TP	Original Series Compact Pickup, 55-inch Frame Width, 1000lb Capacity, 31-inch Steel Treadplate Platform	$ 2,007
DAKOTA TP	Original Series Compact Pickup, 55-inch Frame Width, 1000lb Capacity, 31-inch Steel Treadplate Platform (DAKOTA)	$ 2,007
TUNDRA TP	Original Series Compact Pickup, 61-inch Frame Width, 1000lb Capacity, 31-inch Steel Treadplate Platform (TUNDRA)	$ 2,007
54-1034 TP	Original Series Compact Pickup, 55-inch Frame Width, 1000lb Capacity, 31-inch Steel Treadplate Platform	$ 2,007
MIINI EA	Original Series Compact Pickup, 49-inch Frame Width, 1000lb Capacity, 33-inch Extruded Aluminum Platform	$ 2,591
MINI 54 EA	Original Series Compact Pickup, 55-inch Frame Width, 1000lb Capacity, 33-inch Extruded Aluminum Platform	$ 2,644
DAKOTA EA	Original Series Compact Pickup, 55-inch Frame Width, 1000lb Capacity, 33-inch Extruded Aluminum Platform (DAKOTA)	$ 2,644
TUNDRA EA	Original Series Compact Pickup, 61-inch Frame Width, 1000lb Capacity, 33-inch Extruded Aluminum Platform (TUNDRA)	$ 2,644
54-1034 EA	Original Series Compact Pickup, 55-inch Frame Width, 1000lb Capacity, 33-inch Extruded Aluminum Platform	$ 2,644
G2-54-1342 TP27	G2 Series Service, 55-inch Frame Width, 1300lb Capacity, 27-inch Steel Treadplate Platform	$ 1,989
G2-54-1342 TP38	G2 Series Service, 55-inch Frame Width, 1300lb Capacity, 38-inch Steel Treadplate Platform	$ 2,174
G2-54-1342 TP42	G2 Series Service, 55-inch Frame Width, 1300lb Capacity, 42-inch Steel Treadplate Platform	$ 2,256
G2-54-1342 TT27	G2 Series Service, 55-inch Frame Width, 1300lb Capacity, 27-inch Tommy Traction Platform	$ 2,131
G2-54-1342 EA27	G2 Series Service, 55-inch Frame Width, 1300lb Capacity, 27-inch Extruded Aluminum Platform	$ 2,657
G2-54-1342 EA38	G2 Series Service, 55-inch Frame Width, 1300lb Capacity, 38-inch Extruded Aluminum Platform	$ 2,822
G2-54-1342 EA48	G2 Series Service, 55-inch Frame Width, 1300lb Capacity, 48-inch Extruded Aluminum Platform	$ 3,113
G2-54-1342 BG27	G2 Series Service, 55-inch Frame Width, 1300lb Capacity, 27-inch Bar Grate Platform	$ 2,241
G2-54-1642 TP27	G2 Series Service, 55-inch Frame Width, 1600lb Capacity, 27-inch Steel Treadplate Platform	$ 2,175
G2-54-1642 TP38	G2 Series Service, 55-inch Frame Width, 1600lb Capacity, 38-inch Steel Treadplate Platform	$ 2,359
G2-54-1642 TP42	G2 Series Service, 55-inch Frame Width, 1600lb Capacity, 42-inch Steel Treadplate Platform	$ 2,440
G2-54-1642 TT27	G2 Series Service, 55-inch Frame Width, 1600lb Capacity, 27-inch Tommy Traction Platform	$ 2,317
G2-54-1642 EA27	G2 Series Service, 55-inch Frame Width, 1600lb Capacity, 27-inch Extruded Aluminum Platform	$ 2,844
G2-54-1642 EA38	G2 Series Service, 55-inch Frame Width, 1600lb Capacity, 38-inch Extruded Aluminum Platform	$ 3,006
G2-54-1642 EA48	G2 Series Service, 55-inch Frame Width, 1600lb Capacity, 48-inch Extruded Aluminum Platform	$ 3,302
G2-54-1642 BG27	G2 Series Service, 55-inch Frame Width, 1600lb Capacity, 27-inch Bar Grate Platform	$ 2,427
54-1040 TP27	Original Series Service 55-inch Frame Width, 1000lb Capacity, 27-inch Steel Treadplate Platform	$ 1,888
54-1040 TP38	Original Series Service 55-inch Frame Width, 1000lb Capacity, 38-inch Steel Treadplate Platform	$ 2,087
54-1040 TT27	Original Series Service 55-inch Frame Width, 1000lb Capacity, 27-inch Tommy Traction Platform	$ 2,041
54-1040 EA39	Original Series Service 55-inch Frame Width, 1000lb Capacity, 39-inch Extruded Aluminum Platform	$ 2,681
G2-65-1642 TP38	G2 Series Flatbed Stake Van, 66-inch Frame Width, 1600lb Capacity, 38-inch Steel Treadplate Platform	$ 2,760
G2-73-1642 TP38	G2 Series Flatbed Stake Van, 73-inch Frame Width, 1600lb Capacity, 38-inch Steel Treadplate Platform	$ 2,760
G2-81-1642 TP38	G2 Series Flatbed Stake Van, 81-inch Frame Width, 1600lb Capacity, 38-inch Steel Treadplate Platform	$ 2,760
G2-87-1642 TP38	G2 Series Flatbed Stake Van, 87-inch Frame Width, 1600lb Capacity, 38-inch Steel Treadplate Platform	$ 2,760

G2-92-1642 TP38	G2 Series Flatbed Stake Van, 92-inch Frame Width, 1600lb Capacity, 38-inch Steel Treadplate Platform	$ 2,760
G2-65-1642 EA38	G2 Series Flatbed Stake Van, 66-inch Frame Width, 1600lb Capacity, 38-inch Extruded Aluminum Platform	$ 3,529
G2-73-1642 EA38	G2 Series Flatbed Stake Van, 73-inch Frame Width, 1600lb Capacity, 38-inch Extruded Aluminum Platform	$ 3,529
G2-81-1642 EA38	G2 Series Flatbed Stake Van, 81-inch Frame Width, 1600lb Capacity, 38-inch Extruded Aluminum Platform	$ 3,529
G2-87-1642 EA38	G2 Series Flatbed Stake Van, 87-inch Frame Width, 1600lb Capacity, 38-inch Extruded Aluminum Platform	$ 3,529
G2-92-1642 EA38	G2 Series Flatbed Stake Van, 92-inch Frame Width, 1600lb Capacity, 38-inch Extruded Aluminum Platform	$ 3,529
G2-65-1350 TP35	G2 Series Flatbed Stake Van, 66-inch Frame Width, 1300lb Capacity, 35-inch Steel Treadplate Platform	$ 2,415
G2-65-1350 TP41	G2 Series Flatbed Stake Van, 66-inch Frame Width, 1300lb Capacity, 41-inch Steel Treadplate Platform	$ 2,667
G2-65-1350 TT33	G2 Series Flatbed Stake Van, 66-inch Frame Width, 1300lb Capacity, 33-inch Tommy Traction Platform	$ 2,574
G2-65-1350 EA37	G2 Series Flatbed Stake Van, 66-inch Frame Width, 1300lb Capacity, 37-inch Extruded Aluminum Platform	$ 3,106
G2-65-1350 EA41	G2 Series Flatbed Stake Van, 66-inch Frame Width, 1300lb Capacity, 41-inch Extruded Aluminum Platform	$ 3,434
G2-65-1350 BG33	G2 Series Flatbed Stake Van, 66-inch Frame Width, 1300lb Capacity, 33-inch Bar Grate Platform	$ 2,667
G2-65-1650 TP35	G2 Series Flatbed Stake Van, 66-inch Frame Width, 1600lb Capacity, 35-inch Steel Treadplate Platform	$ 2,511
G2-65-1650 TP41	G2 Series Flatbed Stake Van, 66-inch Frame Width, 1600lb Capacity, 41-inch Steel Treadplate Platform	$ 2,760
G2-65-1650 TT33	G2 Series Flatbed Stake Van, 66-inch Frame Width, 1600lb Capacity, 33-inch Tommy Traction Platform	$ 2,668
G2-73-1650 EA37	G2 Series Flatbed Stake Van, 73-inch Frame Width, 1600lb Capacity, 37-inch Extruded Aluminum Platform	$ 3,199
G2-73-1650 EA41	G2 Series Flatbed Stake Van, 73-inch Frame Width, 1600lb Capacity, 41-inch Extruded Aluminum Platform	$ 3,529
G2-73-1650 BG33	G2 Series Flatbed Stake Van, 73-inch Frame Width, 1600lb Capacity, 33-inch Bar Grate Platform	$ 2,760
G2-73-1350 TP35	G2 Series Flatbed Stake Van, 73-inch Frame Width, 1300lb Capacity, 35-inch Steel Treadplate Platform	$ 2,415
G2-73-1350 TP41	G2 Series Flatbed Stake Van, 73-inch Frame Width, 1300lb Capacity, 41-inch Steel Treadplate Platform	$ 2,667
G2-73-1350 TT33	G2 Series Flatbed Stake Van, 73-inch Frame Width, 1300lb Capacity, 33-inch Tommy Traction Platform	$ 2,574
G2-73-1350 EA37	G2 Series Flatbed Stake Van, 73-inch Frame Width, 1300lb Capacity, 37-inch Extruded Aluminum Platform	$ 3,106
G2-73-1350 EA41	G2 Series Flatbed Stake Van, 73-inch Frame Width, 1300lb Capacity, 41-inch Extruded Aluminum Platform	$ 3,434
G2-73-1350 BG33	G2 Series Flatbed Stake Van, 73-inch Frame Width, 1300lb Capacity, 33-inch Bar Grate Platform	$ 2,667
G2-73-1650 TP35	G2 Series Flatbed Stake Van, 73-inch Frame Width, 1600lb Capacity, 35-inch Steel Treadplate Platform	$ 2,511
G2-73-1650 TP41	G2 Series Flatbed Stake Van, 73-inch Frame Width, 1600lb Capacity, 41-inch Steel Treadplate Platform	$ 2,760
G2-73-1650 TT33	G2 Series Flatbed Stake Van, 73-inch Frame Width, 1600lb Capacity, 33-inch Tommy Traction Platform	$ 2,668
G2-73-1650 EA37	G2 Series Flatbed Stake Van, 73-inch Frame Width, 1600lb Capacity, 37-inch Extruded Aluminum Platform	$ 3,199
G2-73-1650 EA41	G2 Series Flatbed Stake Van, 73-inch Frame Width, 1600lb Capacity, 41-inch Extruded Aluminum Platform	$ 3,529
G2-73-1650 BG33	G2 Series Flatbed Stake Van, 73-inch Frame Width, 1600lb Capacity, 33-inch Bar Grate Platform	$ 2,760
G2-81-1350 TP35	G2 Series Flatbed Stake Van, 81-inch Frame Width, 1300lb Capacity, 35-inch Steel Treadplate Platform	$ 2,415
G2-81-1350 TP41	G2 Series Flatbed Stake Van, 81-inch Frame Width, 1300lb Capacity, 41-inch Steel Treadplate Platform	$ 2,667
G2-81-1350 TT33	G2 Series Flatbed Stake Van, 81-inch Frame Width, 1300lb Capacity, 33-inch Tommy Traction Platform	$ 2,574
G2-81-1350 EA37	G2 Series Flatbed Stake Van, 81-inch Frame Width, 1300lb Capacity, 37-inch Extruded Aluminum Platform	$ 3,106
G2-81-1350 EA41	G2 Series Flatbed Stake Van, 81-inch Frame Width, 1300lb Capacity, 41-inch Extruded Aluminum Platform	$ 3,434
G2-81-1350 BG33	G2 Series Flatbed Stake Van, 81-inch Frame Width, 1300lb Capacity, 33-inch Bar Grate Platform	$ 2,667
G2-81-1650 TP35	G2 Series Flatbed Stake Van, 81-inch Frame Width, 1600lb Capacity, 35-inch Steel Treadplate Platform	$ 2,511
G2-81-1650 TP41	G2 Series Flatbed Stake Van, 81-inch Frame Width, 1600lb Capacity, 41-inch Steel Treadplate Platform	$ 2,760
G2-81-1650 TT33	G2 Series Flatbed Stake Van, 81-inch Frame Width, 1600lb Capacity, 33-inch Tommy Traction Platform	$ 2,668
G2-81-1650 EA37	G2 Series Flatbed Stake Van, 81-inch Frame Width, 1600lb Capacity, 37-inch Extruded Aluminum Platform	$ 3,199
G2-81-1650 EA41	G2 Series Flatbed Stake Van, 81-inch Frame Width, 1600lb Capacity, 41-inch Extruded Aluminum Platform	$ 3,529
G2-81-1650 BG33	G2 Series Flatbed Stake Van, 81-inch Frame Width, 1600lb Capacity, 33-inch Bar Grate Platform	$ 2,760
G2-87-1350 TP35	G2 Series Flatbed Stake Van, 87-inch Frame Width, 1300lb Capacity, 35-inch Steel Treadplate Platform	$ 2,415
G2-87-1350 TP41	G2 Series Flatbed Stake Van, 87-inch Frame Width, 1300lb Capacity, 41-inch Steel Treadplate Platform	$ 2,667
G2-87-1350 TT33	G2 Series Flatbed Stake Van, 87-inch Frame Width, 1300lb Capacity, 33-inch Tommy Traction Platform	$ 2,574
G2-87-1350 EA37	G2 Series Flatbed Stake Van, 87-inch Frame Width, 1300lb Capacity, 37-inch Extruded Aluminum Platform	$ 3,106
G2-87-1350 EA41	G2 Series Flatbed Stake Van, 87-inch Frame Width, 1300lb Capacity, 41-inch Extruded Aluminum Platform	$ 3,434
G2-87-1350 BG33	G2 Series Flatbed Stake Van, 87-inch Frame Width, 1300lb Capacity, 33-inch Bar Grate Platform	$ 2,667
G2-87-1650 TP35	G2 Series Flatbed Stake Van, 87-inch Frame Width, 1600lb Capacity, 35-inch Steel Treadplate Platform	$ 2,511
G2-87-1650 TP41	G2 Series Flatbed Stake Van, 87-inch Frame Width, 1600lb Capacity, 41-inch Steel Treadplate Platform	$ 2,760
G2-87-1650 TT33	G2 Series Flatbed Stake Van, 87-inch Frame Width, 1600lb Capacity, 33-inch Tommy Traction Platform	$ 2,668
G2-87-1650 EA37	G2 Series Flatbed Stake Van, 87-inch Frame Width, 1600lb Capacity, 37-inch Extruded Aluminum Platform	$ 3,199
G2-87-1650 EA41	G2 Series Flatbed Stake Van, 87-inch Frame Width, 1600lb Capacity, 41-inch Extruded Aluminum Platform	$ 3,529
G2-87-1650 BG33	G2 Series Flatbed Stake Van, 87-inch Frame Width, 1600lb Capacity, 33-inch Bar Grate Platform	$ 2,760
G2-92-1350 TP35	G2 Series Flatbed Stake Van, 92-inch Frame Width, 1300lb Capacity, 35-inch Steel Treadplate Platform	$ 2,415
G2-92-1350 TP41	G2 Series Flatbed Stake Van, 92-inch Frame Width, 1300lb Capacity, 41-inch Steel Treadplate Platform	$ 2,667
G2-92-1350 TT33	G2 Series Flatbed Stake Van, 92-inch Frame Width, 1300lb Capacity, 33-inch Tommy Traction Platform	$ 2,574
G2-92-1350 EA37	G2 Series Flatbed Stake Van, 92-inch Frame Width, 1300lb Capacity, 37-inch Extruded Aluminum Platform	$ 3,106
G2-92-1350 EA41	G2 Series Flatbed Stake Van, 92-inch Frame Width, 1300lb Capacity, 41-inch Extruded Aluminum Platform	$ 3,434
G2-92-1350 BG33	G2 Series Flatbed Stake Van, 92-inch Frame Width, 1300lb Capacity, 33-inch Bar Grate Platform	$ 2,667
G2-92-1650 TP35	G2 Series Flatbed Stake Van, 92-inch Frame Width, 1600lb Capacity, 35-inch Steel Treadplate Platform	$ 2,511

G2-92-1650 TP41	G2 Series Flatbed Stake Van, 92-inch Frame Width, 1600lb Capacity, 41-inch Steel Treadplate Platform	$	2,760
G2-92-1650 TT33	G2 Series Flatbed Stake Van, 92-inch Frame Width, 1600lb Capacity, 33-inch Tommy Traction Platform	$	2,668
G2-92-1650 EA37	G2 Series Flatbed Stake Van, 92-inch Frame Width, 1600lb Capacity, 37-inch Extruded Aluminum Platform	$	3,199
G2-92-1650 EA41	G2 Series Flatbed Stake Van, 92-inch Frame Width, 1600lb Capacity, 41-inch Extruded Aluminum Platform	$	3,529
G2-92-1650 BG33	G2 Series Flatbed Stake Van, 92-inch Frame Width, 1600lb Capacity, 33-inch Bar Grate Platform	$	2,760
72-1050 TP36	Original Series Flatbed Stake Van 72-inch Frame Width, 1000lb Capacity, 36-inch Steel Treadplate Platform	$	2,272
72-1050 TP42	Original Series Flatbed Stake Van 72-inch Frame Width, 1000lb Capacity, 42-inch Steel Treadplate Platform	$	2,588
72-1050 TT34	Original Series Flatbed Stake Van 72-inch Frame Width, 1000lb Capacity, 34-inch Tommy Traction Platform	$	2,424
72-1050 EA37	Original Series Flatbed Stake Van 72-inch Frame Width, 1000lb Capacity, 37-inch Extruded Aluminum Platform	$	3,070
72-1050 EA42	Original Series Flatbed Stake Van 72-inch Frame Width, 1000lb Capacity, 42-inch Extruded Aluminum Platform	$	3,425
72-1050 BG34	Original Series Flatbed Stake Van 72-inch Frame Width, 1000lb Capacity, 34-inch Bar Grate Platform	$	2,542
72-1350 TP36	Original Series Flatbed Stake Van 72-inch Frame Width, 1300lb Capacity, 36-inch Steel Treadplate Platform	$	2,418
72-1350 TP42	Original Series Flatbed Stake Van 72-inch Frame Width, 1300lb Capacity, 42-inch Steel Treadplate Platform	$	2,737
72-1350 TT34	Original Series Flatbed Stake Van 72-inch Frame Width, 1300lb Capacity, 34-inch Tommy Traction Platform	$	2,572
72-1350 EA37	Original Series Flatbed Stake Van 72-inch Frame Width, 1300lb Capacity, 37-inch Extrduded Aluminum Platform	$	3,222
72-1350 EA42	Original Series Flatbed Stake Van 72-inch Frame Width, 1300lb Capacity, 42-inch Extruded Aluminum Platform	$	3,577
72-1350 BG34	Original Series Flatbed Stake Van 72-inch Frame Width, 1300lb Capacity, 34-inch Bar Grate Platform	$	2,690
72-1650 TP36	Original Series Flatbed Stake Van 72-inch Frame Width, 1600lb Capacity, 36-inch Steel Treadplate Platform	$	2,505
72-1650 TP42	Original Series Flatbed Stake Van 72-inch Frame Width, 1600lb Capacity, 42-inch Steel Treadplate Platform	$	2,819
72-1650 TT34	Original Series Flatbed Stake Van 72-inch Frame Width, 1600lb Capacity, 34-inch Tommy Traction Platform	$	2,658
72-1650 EA37	Original Series Flatbed Stake Van 72-inch Frame Width, 1600lb Capacity, 37-inch Extruded Aluminum Platform	$	3,294
72-1650 EA42	Original Series Flatbed Stake Van 72-inch Frame Width, 1600lb Capacity, 42-inch Extruded Aluminum Platform	$	3,650
72-1650 BG34	Original Series Flatbed Stake Van 72-inch Frame Width, 1600lb Capacity, 34-inch Bar Grate Platform	$	2,776
80-1050 TP36	Original Series Flatbed Stake Van 80-inch Frame Width, 1000lb Capacity, 36-inch Steel Treadplate Platform	$	2,272
80-1050 TP42	Original Series Flatbed Stake Van 80-inch Frame Width, 1000lb Capacity, 42-inch Steel Treadplate Platform	$	2,588
80-1050 TT34	Original Series Flatbed Stake Van 80-inch Frame Width, 1000lb Capacity, 34-inch Tommy Traction Platform	$	2,424
80-1050 EA37	Original Series Flatbed Stake Van 80-inch Frame Width, 1000lb Capacity, 37-inch Extruded Aluminum Platform	$	3,070
80-1050 EA42	Original Series Flatbed Stake Van 80-inch Frame Width, 1000lb Capacity, 42-inch Extruded Aluminum Platform	$	3,425
80-1050 BG34	Original Series Flatbed Stake Van 80-inch Frame Width, 1000lb Capacity, 34-inch Bar Grate Platform	$	2,542
80-1350 TP36	Original Series Flatbed Stake Van 80-inch Frame Width, 1300lb Capacity, 36-inch Steel Treadplate Platform	$	2,418
80-1350 TP42	Original Series Flatbed Stake Van 80-inch Frame Width, 1300lb Capacity, 42-inch Steel Treadplate Platform	$	2,737
80-1350 TT34	Original Series Flatbed Stake Van 80-inch Frame Width, 1300lb Capacity, 34-inch Tommy Traction Platform	$	2,572
80-1350 EA37	Original Series Flatbed Stake Van 80-inch Frame Width, 1300lb Capacity, 37-inch Extrduded Aluminum Platform	$	3,222
80-1350 EA42	Original Series Flatbed Stake Van 80-inch Frame Width, 1300lb Capacity, 42-inch Extruded Aluminum Platform	$	3,577
80-1350 BG34	Original Series Flatbed Stake Van 80-inch Frame Width, 1300lb Capacity, 34-inch Bar Grate Platform	$	2,690
80-1650 TP36	Original Series Flatbed Stake Van 80-inch Frame Width, 1600lb Capacity, 36-inch Steel Treadplate Platform	$	2,505
80-1650 TP42	Original Series Flatbed Stake Van 80-inch Frame Width, 1600lb Capacity, 42-inch Steel Treadplate Platform	$	2,819
80-1650 TT34	Original Series Flatbed Stake Van 80-inch Frame Width, 1600lb Capacity, 34-inch Tommy Traction Platform	$	2,658
80-1650 EA37	Original Series Flatbed Stake Van 80-inch Frame Width, 1600lb Capacity, 37-inch Extruded Aluminum Platform	$	3,294
80-1650 EA42	Original Series Flatbed Stake Van 80-inch Frame Width, 1600lb Capacity, 42-inch Extruded Aluminum Platform	$	3,650
80-1650 BG34	Original Series Flatbed Stake Van 80-inch Frame Width, 1600lb Capacity, 34-inch Bar Grate Platform	$	2,776
86-1050 TP36	Original Series Flatbed Stake Van 86-inch Frame Width, 1000lb Capacity, 36-inch Steel Treadplate Platform	$	2,272
86-1050 TP42	Original Series Flatbed Stake Van 86-inch Frame Width, 1000lb Capacity, 42-inch Steel Treadplate Platform	$	2,588
86-1050 TT34	Original Series Flatbed Stake Van 86-inch Frame Width, 1000lb Capacity, 34-inch Tommy Traction Platform	$	2,424
86-1050 EA37	Original Series Flatbed Stake Van 86-inch Frame Width, 1000lb Capacity, 37-inch Extruded Aluminum Platform	$	3,070
86-1050 EA42	Original Series Flatbed Stake Van 86-inch Frame Width, 1000lb Capacity, 42-inch Extruded Aluminum Platform	$	3,425
86-1050 BG34	Original Series Flatbed Stake Van 86-inch Frame Width, 1000lb Capacity, 34-inch Bar Grate Platform	$	2,542
86-1350 TP36	Original Series Flatbed Stake Van 86-inch Frame Width, 1300lb Capacity, 36-inch Steel Treadplate Platform	$	2,418
86-1350 TP42	Original Series Flatbed Stake Van 86-inch Frame Width, 1300lb Capacity, 42-inch Steel Treadplate Platform	$	2,737
86-1350 TT34	Original Series Flatbed Stake Van 86-inch Frame Width, 1300lb Capacity, 34-inch Tommy Traction Platform	$	2,572
86-1350 EA37	Original Series Flatbed Stake Van 86-inch Frame Width, 1300lb Capacity, 37-inch Extrduded Aluminum Platform	$	3,222
86-1350 EA42	Original Series Flatbed Stake Van 86-inch Frame Width, 1300lb Capacity, 42-inch Extruded Aluminum Platform	$	3,577
86-1350 BG34	Original Series Flatbed Stake Van 86-inch Frame Width, 1300lb Capacity, 34-inch Bar Grate Platform	$	2,690
86-1650 TP36	Original Series Flatbed Stake Van 86-inch Frame Width, 1600lb Capacity, 36-inch Steel Treadplate Platform	$	2,505
86-1650 TP42	Original Series Flatbed Stake Van 86-inch Frame Width, 1600lb Capacity, 42-inch Steel Treadplate Platform	$	2,819
86-1650 TT34	Original Series Flatbed Stake Van 86-inch Frame Width, 1600lb Capacity, 34-inch Tommy Traction Platform	$	2,658
86-1650 EA37	Original Series Flatbed Stake Van 86-inch Frame Width, 1600lb Capacity, 37-inch Extruded Aluminum Platform	$	3,294
86-1650 EA42	Original Series Flatbed Stake Van 86-inch Frame Width, 1600lb Capacity, 42-inch Extruded Aluminum Platform	$	3,650
86-1650 BG34	Original Series Flatbed Stake Van 86-inch Frame Width, 1600lb Capacity, 34-inch Bar Grate Platform	$	2,776
91-1050 TP36	Original Series Flatbed Stake Van 91-inch Frame Width, 1000lb Capacity, 36-inch Steel Treadplate Platform	$	2,272
91-1050 TP42	Original Series Flatbed Stake Van 91-inch Frame Width, 1000lb Capacity, 42-inch Steel Treadplate Platform	$	2,588

91-1050 TT34	Original Series Flatbed Stake Van 91-inch Frame Width, 1000lb Capacity, 34-inch Tommy Traction Platform	$	2,424
91-1050 EA37	Original Series Flatbed Stake Van 91-inch Frame Width, 1000lb Capacity, 37-inch Extruded Aluminum Platform	$	3,070
91-1050 EA42	Original Series Flatbed Stake Van 91-inch Frame Width, 1000lb Capacity, 42-inch Extruded Aluminum Platform	$	3,425
91-1050 BG34	Original Series Flatbed Stake Van 91-inch Frame Width, 1000lb Capacity, 34-inch Bar Grate Platform	$	2,542
91-1350 TP36	Original Series Flatbed Stake Van 91-inch Frame Width, 1300lb Capacity, 36-inch Steel Treadplate Platform	$	2,418
91-1350 TP42	Original Series Flatbed Stake Van 91-inch Frame Width, 1300lb Capacity, 42-inch Steel Treadplate Platform	$	2,737
91-1350 TT34	Original Series Flatbed Stake Van 91-inch Frame Width, 1300lb Capacity, 34-inch Tommy Traction Platform	$	2,572
91-1350 EA37	Original Series Flatbed Stake Van 91-inch Frame Width, 1300lb Capacity, 37-inch Extrduded Aluminum Platform	$	3,222
91-1350 EA42	Original Series Flatbed Stake Van 91-inch Frame Width, 1300lb Capacity, 42-inch Extruded Aluminum Platform	$	3,577
91-1350 BG34	Original Series Flatbed Stake Van 91-inch Frame Width, 1300lb Capacity, 34-inch Bar Grate Platform	$	2,690
91-1650 TP36	Original Series Flatbed Stake Van 91-inch Frame Width, 1600lb Capacity, 36-inch Steel Treadplate Platform	$	2,505
91-1650 TP42	Original Series Flatbed Stake Van 91-inch Frame Width, 1600lb Capacity, 42-inch Steel Treadplate Platform	$	2,819
91-1650 TT34	Original Series Flatbed Stake Van 91-inch Frame Width, 1600lb Capacity, 34-inch Tommy Traction Platform	$	2,658
91-1650 EA37	Original Series Flatbed Stake Van 91-inch Frame Width, 1600lb Capacity, 37-inch Extruded Aluminum Platform	$	3,294
91-1650 EA42	Original Series Flatbed Stake Van 91-inch Frame Width, 1600lb Capacity, 42-inch Extruded Aluminum Platform	$	3,650
91-1650 BG34	Original Series Flatbed Stake Van 91-inch Frame Width, 1600lb Capacity, 34-inch Bar Grate Platform	$	2,776
TKT-80-25 TP50	Tuckunder Series 80-inch TKT, 2500lb Capacity, 50-inch Steel Treadplate Platform	$	5,675
TKT-80-25 TP60	Tuckunder Series 80-inch TKT, 2500lb Capacity, 60-inch Steel Treadplate Platform	$	5,834
TKT-80-25 EA50	Tuckunder Series 80-inch TKT, 2500lb Capacity, 50-inch Extruded Aluminum Platform	$	6,915
TKT-80-25 EA60	Tuckunder Series 80-inch TKT, 2500lb Capacity, 60-inch Extruded Aluminum Platform	$	7,185
TKT-80-30 TP50	Tuckunder Series 80-inch TKT, 3000lb Capacity, 50-inch Steel Treadplate Platform	$	5,968
TKT-80-30 TP60	Tuckunder Series 80-inch TKT, 3000lb Capacity, 60-inch Steel Treadplate Platform	$	6,127
TKT-80-30 EA50	Tuckunder Series 80-inch TKT, 3000lb Capacity, 50-inch Extruded Aluminum Platform	$	7,208
TKT-80-30 EA60	Tuckunder Series 80-inch TKT, 3000lb Capacity, 60-inch Extruded Aluminum Platform	$	7,478
85-25 TP36	Railgate Series High-Cycle 85-inch Width, 2500lb Capacity, 36-inch Steel Treadplate Platform	$	5,007
85-25 TP42	Railgate Series High-Cycle 85-inch Width, 2500lb Capacity, 42-inch Steel Treadplate Platform	$	5,236
85-25 TP48	Railgate Series High-Cycle 85-inch Width, 2500lb Capacity, 48-inch Steel Treadplate Platform	$	5,464
85-25 EA55	Railgate Series High-Cycle 85-inch Width, 2500lb Capacity, 55-inch Extruded Aluminum Platform	$	6,454
85-30 TP36	Railgate Series High-Cycle 85-inch Width, 3000lb Capacity, 36-inch Steel Treadplate Platform	$	5,297
85-30 TP42	Railgate Series High-Cycle 85-inch Width, 3000lb Capacity, 42-inch Steel Treadplate Platform	$	5,525
85-30 TP48	Railgate Series High-Cycle 85-inch Width, 3000lb Capacity, 48-inch Steel Treadplate Platform	$	5,754
85-30 EA55	Railgate Series High-Cycle 85-inch Width, 3000lb Capacity, 55-inch Extruded Aluminum Platform	$	6,656
89-25 TP36	Railgate Series High-Cycle 89-inch Width, 2500lb Capacity, 36-inch Steel Treadplate Platform	$	5,007
89-25 TP42	Railgate Series High-Cycle 89-inch Width, 2500lb Capacity, 42-inch Steel Treadplate Platform	$	5,236
89-25 TP48	Railgate Series High-Cycle 89-inch Width, 2500lb Capacity, 48-inch Steel Treadplate Platform	$	5,464
89-25 EA55	Railgate Series High-Cycle 89-inch Width, 2500lb Capacity, 55-inch Extruded Aluminum Platform	$	6,454
89-30 TP36	Railgate Series High-Cycle 89-inch Width, 3000lb Capacity, 36-inch Steel Treadplate Platform	$	5,297
89-30 TP42	Railgate Series High-Cycle 89-inch Width, 3000lb Capacity, 42-inch Steel Treadplate Platform	$	5,525
89-30 TP48	Railgate Series High-Cycle 89-inch Width, 3000lb Capacity, 48-inch Steel Treadplate Platform	$	5,754
89-30 EA55	Railgate Series High-Cycle 89-inch Width, 3000lb Capacity, 55-inch Extruded Aluminum Platform	$	6,656
95-25 TP36	Railgate Series High-Cycle 95-inch Width, 2500lb Capacity, 36-inch Steel Treadplate Platform	$	5,579
95-25 TP42	Railgate Series High-Cycle 95-inch Width, 2500lb Capacity, 42-inch Steel Treadplate Platform	$	5,808
95-25 TP48	Railgate Series High-Cycle 95-inch Width, 2500lb Capacity, 48-inch Steel Treadplate Platform	$	6,036
95-25 EA55	Railgate Series High-Cycle 95-inch Width, 2500lb Capacity, 55-inch Extruded Aluminum Platform	$	7,026
95-30 TP36	Railgate Series High-Cycle 95-inch Width, 3000lb Capacity, 36-inch Steel Treadplate Platform	$	5,869
95-30 TP42	Railgate Series High-Cycle 95-inch Width, 3000lb Capacity, 42-inch Steel Treadplate Platform	$	6,097
95-30 TP48	Railgate Series High-Cycle 95-inch Width, 3000lb Capacity, 48-inch Steel Treadplate Platform	$	6,326
95-30 EA55	Railgate Series High-Cycle 95-inch Width, 3000lb Capacity, 55-inch Extruded Aluminum Platform	$	7,228
89-25 BF TP60	Railgate Series High-Cycle, Bi-Fold 89-inch Width, 2500lb Capacity, 60-inch Steel Treadplate Platform	$	7,680
89-25 BF TP70	Railgate Series High-Cycle, Bi-Fold 89-inch Width, 2500lb Capacity, 70-inch Steel Treadplate Platform	$	8,075
89-30 BF TP60	Railgate Series High-Cycle, Bi-Fold 89-inch Width, 3000lb Capacity, 60-inch Steel Treadplate Platform	$	7,970
89-30 BF TP70	Railgate Series High-Cycle, Bi-Fold 89-inch Width, 3000lb Capacity, 70-inch Steel Treadplate Platform	$	8,365
95-25 BF TP60	Railgate Series High-Cycle, Bi-Fold 95-inch Width, 2500lb Capacity, 60-inch Steel Treadplate Platform	$	8,251
95-25 BF TP70	Railgate Series High-Cycle, Bi-Fold 95-inch Width, 2500lb Capacity, 70-inch Steel Treadplate Platform	$	8,648
95-30 BF TP60	Railgate Series High-Cycle, Bi-Fold 95-inch Width, 3000lb Capacity, 60-inch Steel Treadplate Platform	$	8,541
95-30 BF TP70	Railgate Series High-Cycle, Bi-Fold 95-inch Width, 3000lb Capacity, 70-inch Steel Treadplate Platform	$	8,937
73-16 TP37	Railgate Series Standard 73-inch Steel Frame, 1600lb Capacity, 37-inch Steel Treadplate Platform	$	3,157
73-16 TP42	Railgate Series Standard 73-inch Steel Frame, 1600lb Capacity, 42-inch Steel Treadplate Platform	$	3,392
73-16 EA55	Railgate Series Standard 73-inch Steel Frame, 1600lb Capacity, 55-inch Extruded Aluminum Platform	$	4,205
73-20 TP37	Railgate Series Standard 73-inch Steel Frame, 2000lb Capacity, 37-inch Steel Treadplate Platform	$	3,384
73-20 TP42	Railgate Series Standard 73-inch Steel Frame, 2000lb Capacity, 42-inch Steel Treadplate Platform	$	3,624

73-20 EA55	Railgate Series Standard 73-inch Steel Frame, 2000lb Capacity, 55-inch Extruded Aluminum Platform	$ 4,429
73-20 GBR	Railgate Series Standard 73-inch Steel Frame, 2000lb Capacity, Gas Bottle Rack Platform	$ 4,217
A73-16 EA55	Railgate Series Standard 73-inch Aluminum Frame, 1600lb Capacity, 55-inch Extruded Aluminum Platform	$ 5,517
A73-20 EA55	Railgate Series Standard 73-inch Aluminum Frame, 2000lb Capacity, 55-inch Extruded Aluminum Platform	$ 5,737
79-16 TP37	Railgate Series Standard 79-inch Steel Frame, 1600lb Capacity, 37-inch Steel Treadplate Platform	$ 3,157
79-16 TP42	Railgate Series Standard 79-inch Steel Frame, 1600lb Capacity, 42-inch Steel Treadplate Platform	$ 3,392
79-16 EA55	Railgate Series Standard 79-inch Steel Frame, 1600lb Capacity, 55-inch Extruded Aluminum Platform	$ 4,205
79-20 TP37	Railgate Series Standard 79-inch Steel Frame, 2000lb Capacity, 37-inch Steel Treadplate Platform	$ 3,384
79-20 TP42	Railgate Series Standard 79-inch Steel Frame, 2000lb Capacity, 42-inch Steel Treadplate Platform	$ 3,624
79-20 EA55	Railgate Series Standard 79-inch Steel Frame, 2000lb Capacity, 55-inch Extruded Aluminum Platform	$ 4,429
79-20 GBR	Railgate Series Standard 79-inch Steel Frame, 2000lb Capacity, Gas Bottle Rack Platform	$ 4,217
A79-16 EA55	Railgate Series Standard 79-inch Aluminum Frame, 1600lb Capacity, 55-inch Extruded Aluminum Platform	$ 5,517
A79-20 EA55	Railgate Series Standard 79-inch Aluminum Frame, 2000lb Capacity, 55-inch Extruded Aluminum Platform	$ 5,737
85-16 TP37	Railgate Series Standard 85-inch Steel Frame, 1600lb Capacity, 37-inch Steel Treadplate Platform	$ 3,157
85-16 TP42	Railgate Series Standard 85-inch Steel Frame, 1600lb Capacity, 42-inch Steel Treadplate Platform	$ 3,392
85-16 EA55	Railgate Series Standard 85-inch Steel Frame, 1600lb Capacity, 55-inch Extruded Aluminum Platform	$ 4,205
85-20 TP37	Railgate Series Standard 85-inch Steel Frame, 2000lb Capacity, 37-inch Steel Treadplate Platform	$ 3,384
85-20 TP42	Railgate Series Standard 85-inch Steel Frame, 2000lb Capacity, 42-inch Steel Treadplate Platform	$ 3,624
85-20 EA55	Railgate Series Standard 85-inch Steel Frame, 2000lb Capacity, 55-inch Extruded Aluminum Platform	$ 4,429
85-20 GBR	Railgate Series Standard 85-inch Steel Frame, 2000lb Capacity, Gas Bottle Rack Platform	$ 4,217
A85-16 EA55	Railgate Series Standard 85-inch Aluminum Frame, 1600lb Capacity, 55-inch Extruded Aluminum Platform	$ 5,517
A85-20 EA55	Railgate Series Standard 85-inch Aluminum Frame, 2000lb Capacity, 55-inch Extruded Aluminum Platform	$ 5,737
89-16 TP37	Railgate Series Standard 89-inch Steel Frame, 1600lb Capacity, 37-inch Steel Treadplate Platform	$ 3,157
89-16 TP42	Railgate Series Standard 89-inch Steel Frame, 1600lb Capacity, 42-inch Steel Treadplate Platform	$ 3,392
89-16 EA55	Railgate Series Standard 89-inch Steel Frame, 1600lb Capacity, 55-inch Extruded Aluminum Platform	$ 4,205
89-20 TP37	Railgate Series Standard 89-inch Steel Frame, 2000lb Capacity, 37-inch Steel Treadplate Platform	$ 3,384
89-20 TP42	Railgate Series Standard 89-inch Steel Frame, 2000lb Capacity, 42-inch Steel Treadplate Platform	$ 3,624
89-20 EA55	Railgate Series Standard 89-inch Steel Frame, 2000lb Capacity, 55-inch Extruded Aluminum Platform	$ 4,429
89-20 GBR	Railgate Series Standard 89-inch Steel Frame, 2000lb Capacity, Gas Bottle Rack Platform	$ 4,217
A89-16 EA55	Railgate Series Standard 89-inch Aluminum Frame, 1600lb Capacity, 55-inch Extruded Aluminum Platform	$ 5,517
A89-20 EA55	Railgate Series Standard 89-inch Aluminum Frame, 2000lb Capacity, 55-inch Extruded Aluminum Platform	$ 5,737
95-16 TP37	Railgate Series Standard 95-inch Steel Frame, 1600lb Capacity, 37-inch Steel Treadplate Platform	$ 3,729
95-16 TP42	Railgate Series Standard 95-inch Steel Frame, 1600lb Capacity, 42-inch Steel Treadplate Platform	$ 3,964
95-16 EA55	Railgate Series Standard 95-inch Steel Frame, 1600lb Capacity, 55-inch Extruded Aluminum Platform	$ 4,777
95-20 TP37	Railgate Series Standard 95-inch Steel Frame, 2000lb Capacity, 37-inch Steel Treadplate Platform	$ 3,956
95-20 TP42	Railgate Series Standard 95-inch Steel Frame, 2000lb Capacity, 42-inch Steel Treadplate Platform	$ 4,196
95-20 EA55	Railgate Series Standard 95-inch Steel Frame, 2000lb Capacity, 55-inch Extruded Aluminum Platform	$ 5,001
95-20 GBR	Railgate Series Standard 95-inch Steel Frame, 2000lb Capacity, Gas Bottle Rack Platform	$ 4,789
A95-16 EA55	Railgate Series Standard 95-inch Aluminum Frame, 1600lb Capacity, 55-inch Extruded Aluminum Platform	$ 6,089
A95-20 EA55	Railgate Series Standard 95-inch Aluminum Frame, 2000lb Capacity, 55-inch Extruded Aluminum Platform	$ 6,309
85-16 RF 45-6	Railgate Series (RF) 85-inch Steel Frame, 1600lb Capacity, 45-6 Extruded Aluminum Platform	$ 4,565
85-16 RF 45-12	Railgate Series (RF) 85-inch Steel Frame, 1600lb Capacity, 45-12 Extruded Aluminum Platform	$ 4,565
85-16 RF 50-6	Railgate Series (RF) 85-inch Steel Frame, 1600lb Capacity, 50-6 Extruded Aluminum Platform	$ 4,565
85-20 RF 45-6	Railgate Series (RF) 85-inch Steel Frame, 2000lb Capacity, 45-6 Extruded Aluminum Platform	$ 4,787
85-20 RF 45-12	Railgate Series (RF) 85-inch Steel Frame, 2000lb Capacity, 45-12 Extruded Aluminum Platform	$ 4,787
85-20 RF 50-6	Railgate Series (RF) 85-inch Steel Frame, 2000lb Capacity, 50-6 Extruded Aluminum Platform	$ 4,787
A85-16 RF 45-6	Railgate Series (RF) 85-inch Aluminum Frame, 1600lb Capacity, 45-6 Extruded Aluminum Platform	$ 5,877
A85-16 RF 45-12	Railgate Series (RF) 85-inch Aluminum Frame, 1600lb Capacity, 45-12 Extruded Aluminum Platform	$ 5,877
A85-16 RF 50-6	Railgate Series (RF) 85-inch Aluminum Frame, 1600lb Capacity, 50-6 Extruded Aluminum Platform	$ 5,877
A85-20 RF 45-6	Railgate Series (RF) 85-inch Aluminum Frame, 2000lb Capacity, 45-6 Extruded Aluminum Platform	$ 6,096
A85-20 RF 45-12	Railgate Series (RF) 85-inch Aluminum Frame, 2000lb Capacity, 45-12 Extruded Aluminum Platform	$ 6,096
A85-20 RF 50-6	Railgate Series (RF) 85-inch Aluminum Frame, 2000lb Capacity, 50-6 Extruded Aluminum Platform	$ 6,096
89-16 RF 45-6	Railgate Series (RF) 89-inch Steel Frame, 1600lb Capacity, 45-6 Extruded Aluminum Platform	$ 4,565
89-16 RF 45-12	Railgate Series (RF) 89-inch Steel Frame, 1600lb Capacity, 45-12 Extruded Aluminum Platform	$ 4,565
89-16 RF 50-6	Railgate Series (RF) 89-inch Steel Frame, 1600lb Capacity, 50-6 Extruded Aluminum Platform	$ 4,565
89-20 RF 45-6	Railgate Series (RF) 89-inch Steel Frame, 2000lb Capacity, 45-6 Extruded Aluminum Platform	$ 4,787
89-20 RF 45-12	Railgate Series (RF) 89-inch Steel Frame, 2000lb Capacity, 45-12 Extruded Aluminum Platform	$ 4,787
89-20 RF 50-6	Railgate Series (RF) 89-inch Steel Frame, 2000lb Capacity, 50-6 Extruded Aluminum Platform	$ 4,787
A89-16 RF 45-6	Railgate Series (RF) 89-inch Aluminum Frame, 1600lb Capacity, 45-6 Extruded Aluminum Platform	$ 5,877
A89-16 RF 45-12	Railgate Series (RF) 89-inch Aluminum Frame, 1600lb Capacity, 45-12 Extruded Aluminum Platform	$ 5,877
A89-16 RF 50-6	Railgate Series (RF) 89-inch Aluminum Frame, 1600lb Capacity, 50-6 Extruded Aluminum Platform	$ 5,877

A89-20 RF 45-6	Railgate Series (RF) 89-inch Aluminum Frame, 2000lb Capacity, 45-6 Extruded Aluminum Platform	$	6,096
A89-20 RF 45-12	Railgate Series (RF) 89-inch Aluminum Frame, 2000lb Capacity, 45-12 Extruded Aluminum Platform	$	6,096
A89-20 RF 50-6	Railgate Series (RF) 89-inch Aluminum Frame, 2000lb Capacity, 50-6 Extruded Aluminum Platform	$	6,096
95-16 RF 45-6	Railgate Series (RF) 95-inch Steel Frame, 1600lb Capacity, 45-6 Extruded Aluminum Platform	$	5,137
95-16 RF 45-12	Railgate Series (RF) 95-inch Steel Frame, 1600lb Capacity, 45-12 Extruded Aluminum Platform	$	5,137
95-16 RF 50-6	Railgate Series (RF) 95-inch Steel Frame, 1600lb Capacity, 50-6 Extruded Aluminum Platform	$	5,137
95-20 RF 45-6	Railgate Series (RF) 95-inch Steel Frame, 2000lb Capacity, 45-6 Extruded Aluminum Platform	$	5,359
95-20 RF 45-12	Railgate Series (RF) 95-inch Steel Frame, 2000lb Capacity, 45-12 Extruded Aluminum Platform	$	5,359
95-20 RF 50-6	Railgate Series (RF) 95-inch Steel Frame, 2000lb Capacity, 50-6 Extruded Aluminum Platform	$	5,359
A95-16 RF 45-6	Railgate Series (RF) 95-inch Aluminum Frame, 1600lb Capacity, 45-6 Extruded Aluminum Platform	$	6,449
A95-16 RF 45-12	Railgate Series (RF) 95-inch Aluminum Frame, 1600lb Capacity, 45-12 Extruded Aluminum Platform	$	6,449
A95-16 RF 50-6	Railgate Series (RF) 95-inch Aluminum Frame, 1600lb Capacity, 50-6 Extruded Aluminum Platform	$	6,449
A95-20 RF 45-6	Railgate Series (RF) 95-inch Aluminum Frame, 2000lb Capacity, 45-6 Extruded Aluminum Platform	$	6,668
A95-20 RF 45-12	Railgate Series (RF) 95-inch Aluminum Frame, 2000lb Capacity, 45-12 Extruded Aluminum Platform	$	6,668
A95-20 RF 50-6	Railgate Series (RF) 95-inch Aluminum Frame, 2000lb Capacity, 50-6 Extruded Aluminum Platform	$	6,668
G2-73-1650 LD34	G2 Series Lift-N-Dump 73-inch Frame Width, 1600lb Capacity, 33-inch Dump-Through Steel Treadplate Platform	$	2,989
G2-81-1650 LD34	G2 Series Lift-N-Dump 81-inch Frame Width, 1600lb Capacity, 33-inch Dump-Through Steel Treadplate Platform	$	2,989
G2-87-1650 LD34	G2 Series Lift-N-Dump 87-inch Frame Width, 1600lb Capacity, 33-inch Dump-Through Steel Treadplate Platform	$	2,989
G2-92-1650 LD34	G2 Series Lift-N-Dump 92-inch Frame Width, 1600lb Capacity, 33-inch Dump-Through Steel Treadplate Platform	$	2,989
CVL-AA-1330 EF71	Cantilever Series (AA Model) 1300lb Capacity, 71-inch Extruded Aluminum Platform	$	6,099
CVL-AA-1330 EF52	Cantilever Series (AA Model) 1300lb Capacity, 52-inch Extruded Aluminum Platform	$	5,673
CVL-AB-1330 EF71	Cantilever Series (AB Model) 1300lb Capacity, 71-inch Extruded Aluminum Platform	$	6,099
CVL-AB-1330 EF52	Cantilever Series (AB Model) 1300lb Capacity, 52-inch Extruded Aluminum Platform	$	5,673
CVL-AC-1330 EF71	Cantilever Series (AC Model) 1300lb Capacity, 71-inch Extruded Aluminum Platform	$	6,099
CVL-AC-1330 EF52	Cantilever Series (AC Model) 1300lb Capacity, 52-inch Extruded Aluminum Platform	$	5,673
CVL-AD-1330 EF52	Cantilever Series (AD Model) 1300lb Capacity, 52-inch Extruded Aluminum Platform	$	5,673
CVL-AE-1330 EF71	Cantilever Series (AE Model) 1300lb Capacity, 71-inch Extruded Aluminum Platform	$	6,099
CVL-AE-1330 EF52	Cantilever Series (AE Model) 1300lb Capacity, 52-inch Extruded Aluminum Platform	$	5,673
CVL-AH-1330 EF71	Cantilever Series (AH Model) 1300lb Capacity, 71-inch Extruded Aluminum Platform	$	6,099
CVL-AH-1330 EF52	Cantilever Series (AH Model) 1300lb Capacity, 52-inch Extruded Aluminum Platform	$	5,673
CVL-AF-1330 EF71	Cantilever Series (AF Model) 1300lb Capacity, 71-inch Extruded Aluminum Platform	$	6,099
CVL-AF-1330 EF52	Cantilever Series (AF Model) 1300lb Capacity, 52-inch Extruded Aluminum Platform	$	5,673
CVL-AG-1330 EF71	Cantilever Series (AG Model) 1300lb Capacity, 71-inch Extruded Aluminum Platform	$	6,099
CVL-AG-1330 EF52	Cantilever Series (AG Model) 1300lb Capacity, 52-inch Extruded Aluminum Platform	$	5,673
650	650 Series, 39-inch Smooth Steel Platform	$	2,556
64P-1036 TP27	Original Series Cargo Van 64-Width, 1000lb Capacity, 27-inch Steel Treadplate Platform	$	2,004
64P-1036 TP38	Original Series Cargo Van 64-Width, 1000lb Capacity, 38-inch Steel Treadplate Platform	$	2,204
72P-1036 TP38	Original Series Cargo Van 72-Width, 1000lb Capacity, 38-inch Steel Treadplate Platform	$	2,606
64P-1036 EA39	Original Series Cargo Van 64-Width, 1000lb Capacity, 39-inch Extruded Aluminum Platform	$	2,866
64P-1036 EA48	Original Series Cargo Van 64-Width, 1000lb Capacity, 48-inch Extruded Aluminum Platform	$	3,207
72P-1036 EA39	Original Series Cargo Van 72-Width, 1000lb Capacity, 39-inch Extruded Aluminum Platform	$	3,392
72P-1036 EA48	Original Series Cargo Van 72-Width, 1000lb Capacity, 48-inch Extruded Aluminum Platform	$	3,716
RTC-85-16 EA35	Railgate Series (RTC) All Aluminum 85-Width, 1600lb Capacity, 35-inch Extruded Aluminum Platform	$	5,378
RTC-85-16 EA55	Railgate Series (RTC) All Aluminum 85-Width, 1600lb Capacity, 55-inch Extruded Aluminum Platform	$	6,002
RTC-85-20 EA35	Railgate Series (RTC) All Aluminum 85-Width, 2000lb Capacity, 35-inch Extruded Aluminum Platform	$	5,990
RTC-85-20 EA55	Railgate Series (RTC) All Aluminum 85-Width, 2000lb Capacity, 55-inch Extruded Aluminum Platform	$	6,614
RTC-89-16 EA35	Railgate Series (RTC) All Aluminum 89-Width, 1600lb Capacity, 35-inch Extruded Aluminum Platform	$	5,378
RTC-89-16 EA55	Railgate Series (RTC) All Aluminum 89-Width, 1600lb Capacity, 55-inch Extruded Aluminum Platform	$	6,002
RTC-89-20 EA35	Railgate Series (RTC) All Aluminum 89-Width, 2000lb Capacity, 35-inch Extruded Aluminum Platform	$	5,990
RTC-89-20 EA55	Railgate Series (RTC) All Aluminum 89-Width, 2000lb Capacity, 55-inch Extruded Aluminum Platform	$	6,614

Liftgate Options - All Models	Description	MSRP
Bolt-on Light Kit (T-57) *G2-Series only*	3-light kit, 2 or 3-light systems (two red, one white each side)	$ 290
Bolt-on LED Light Kit (T-57L) *G2 Series only*	3-light LED kit, 2 or 3-light systems (two red, one white each side)	$ 396
Remote Pendant Control	in place of standard curb-side fixed control	$ 156
Dual Controls	standard fixed control + remote pendant control	$ 290
Rubber Platform Bumpers	set of four or six depending on platform	$ 30
In-cab, Shut-off Switch	disables power to the liftgate from within the truck cab	$ 48
Folding Tire Rack	specify hinged side, not available for two-piece platforms	$ 214
Extra Bracket Kit (model 60)	top bracket and gussets only (one set included with liftgate)	$ 141
2-light Light Kit (T-64) *Original Series only*	2-light add-on system (one red, one white each side)	$ 195
3-light Light Kit (T-54) *Original Series only*	3-light kit, 2 or 3-light systems (two red, one white each side)	$ 245
2-light LED Light Kit (T-64L) *Original Series only*	2-light add-on system (one red, one white each side)	$ 301
3-light LED Light Kit (T-54L) *Original Series only*	3-light LED kit, 2 or 3-light systems (two red, one white each side)	$ 365
Grip-style Tape Kit	for smooth steel platforms	$ 62
Split Cart Stops	located in platform taper, secure wheeled cargo (EA platforms only)	$ 508
Above-bed Travel	allows platform to travel above truck bed height for dock loading	$ 256
Galvanizing Option (G2 Series)	a high-quality "hot dipped" metallic-zinc finish to prevent corrosion	$ 698
Galvanizing Option (TKT Models)	a high-quality "hot dipped" metallic-zinc finish to prevent corrosion	$ 698
Extended Warranty (G2)	additional year of protection beyond standard warranty (2 year max.)	$ 160
Extended Warranty (TKT, HC Rail)	additional year of protection beyond standard warranty (2 year max.)	$ 282
Torsion Bar	in place of standard cam-arm system, when ordering liftgate	$ -
Split Retention Ramps	available for treadplate platforms only, secures wheeled cargo	$ 523
Railgate LED Light Kit	3-light LED kit (two red, one white each side)	$ 223
Winter Grade Hydraulic Fluid	increases consistency of motion in cold climates	$ 35

Additional Platform Depth		
5" extrusion	individual aluminum extrusions	$156 per

Truck-Lite Co., LLC

2016 US Warehouse Distributor Price List

Effective January 13, 2017

Part Number	Description	Pop. Code	Sugg List price
00790	15 SERIES ADAPTER MOUNT, GRAY	C	$ 5.33
00791	15 SERIES ADAPTER MOUNT, CHROME	C	$ 8.80
00792	15 SERIES BEZEL, SELF GROUND, GRAY	C	$ 6.80
00793	15 SERIES ADAPTER MOUNT, CHROME	C	$ 8.87
00794	ID BAR SS 6" CENTERS	C	$ 37.50
00798	ID BAR 6" CENTERS	C	$ 14.13
00799	ID BAR 9" CENTERS	C	$ 23.95
00801	CAM-ON MOUNT	C	$ 6.47
00802	15 SERIES ADAPTER MOUNT, BLACK	C	$ 5.33
00808	15 SERIES ID BAR 6" CENTERS	C	$ 16.27
00809	15 SERIES ID BAR 9" CENTER, BLACK	C	$ 6.27
00814	ID MOUNTING BRACKET	D	$ 28.30
00815	ID MOUNTING BRACKET 6" CENTERS	C	$ 32.53
00816	ID MOUNTING BRACKET 9" CENTERS	C	$ 39.63
00817	ID MOUNTING BRACKET 6" CENTERS	C	$ 18.50
04115	COURTESY LAMP W/GASKET	B	$ 4.50
04116	COURTESY LAMP W/GASKET	B	$ 9.13
07021	25 SERIES CAB MARKER LENS	D	$ 6.10
07022	25 SERIES CAB MARKER GASKET	D	$ 1.60
07080	RECTANGULAR F/P/T	B	$ 29.60
07080-3	RECTANGULAR F/P/T, BULK	B	$ 28.23
07081	RECTANGULAR S/T/T	B	$ 28.93
07081-3	RECTANGULAR S/T/T, BULK	B	$ 26.00
07082C	RECTANGULAR CLEAR B/U 12 VOLT	B	$ 28.67
07082C3	RECTANGULAR CLEAR B/U 12 VOLT, BULK	B	$ 25.80
07092	RECTANGULAR TAIL 24 VOLT	W	$ 56.70
07093	RECTANGULAR STOP 24 VOLT	W	$ 56.77
07094	RECTANGULAR TURN 24 VOLT	W	$ 56.70
07098	RECTANGULAR S/T	A	$ 20.96
07098-3	RECTANGULAR S/T, BULK	A	$ 18.97
07168	BRACKET ASSEMBLY 5X7 HARDWARE KIT	W	$ 142.70
07332	KNOB REPLACEMENT, RED	W	$ 1.90
07393	LED M/C 10-30V LAMP KIT, RED	W	$ 87.60
07394	LED M/C 10-30V LAMP KIT, AMBER	W	$ 87.60
07395	LED 30 SERIES M/C 12V LAMP KIT, RED	W	$ 109.50
07396	LED 30 SERIES M/C 12V LAMP KIT, AMBER	W	$ 109.50
10004R	10 SERIES SURFACE MOUNT KIT	C	$ 10.77
10004R3	10 SERIES SURFACE MOUNT KIT, BULK	C	$ 9.33
10004RP	10 SERIES SURFACE MOUNT KIT, PALLET	C	$ 8.87
1001	BEEHIVE CLEARANCE MARKER LAMP, AMBER	W	$ 20.53
1001A	BEEHIVE CLEARANCE MARKER LAMP, AMBER	D	$ 20.53
10028R	SUPER 10 GROMMET KIT, RED	A	$ 12.54
10028Y	SUPER 10 GROMMET KIT, YELLOW	A	$ 12.54
10050R	LED 10 SERIES M/C GROMMET KIT	A	$ 28.91
10050R3	LED 10 SERIES M/C GROMMET KIT, BULK	A	$ 27.38
10050Y	LED 10 SERIES M/C GROMMET KIT	A	$ 30.23

10050Y3	LED 10 SERIES M/C GROMMET KIT, BULK	A	$ 28.67
10051R	LED 10 SERIES M/C FLANGE KIT	A	$ 28.33
10051R3	LED 10 SERIES M/C FLANGE KIT, BULK	A	$ 27.21
10051Y	LED 10 SERIES M/C FLANGE KIT	A	$ 29.65
10051Y3	LED 10 SERIES M/C FLANGE KIT, BULK	A	$ 28.53
10075R	LED 10 SERIES COMBO GROMMET KIT	A	$ 53.66
10075R3	LED 10 SERIES COMBO GROMMET KIT, BULK	A	$ 50.84
10075Y	LED 10 SERIES COMBO GROMMET KIT	B	$ 53.66
10075Y3	LED 10 SERIES COMBO GROMMET KIT, BULK	B	$ 50.84
10076R	LED 10 SERIES COMB., LOW PROFILE GROMMET KIT	B	$ 47.20
10076Y	LED 10 SERIES COMB., LOW PROFILE GROMMET KIT	B	$ 45.57
10079R	LED 10 SERIES COMBO W/FLANGE, RED	B	$ 57.33
10079Y	LED 10 SERIES COMBO W/FLANGE, YELLOW	B	$ 57.33
10085R	LED 10 SERIES COMBO GROMMET KIT	B	$ 51.87
10085Y	LED 10 SERIES COMBO GROMMET KIT	B	$ 49.17
10086R	LED 10 SERIES LOW PROFILE. COMBO M/C GROMMET KIT, 12 VOLT	A	$ 52.88
10086Y	LED 10 SERIES LOW PROFILE. COMBO M/C GROMMET KIT, 12 VOLT	A	$ 51.15
10089R	LED 10 SERIES LOW PROFILE COMBO M/C GRAY FLANGE KIT, 12 VOLT	A	$ 53.19
10089Y	LED 10 SERIES LOW PROFILE COMBO M/C GRAY FLANGE KIT, 12 VOLT	A	$ 51.25
10090R	LED 10 SERIES COMB. GRAY FLANGE KIT	B	$ 50.97
10090Y	LED 10 SERIES COMB. GRAY FLANGE KIT	B	$ 49.20
10091R	LED 10 SERIES COMBO, LOW PROFILE GRAY FLANGE KIT	B	$ 47.50
10091Y	LED 10 SERIES COMBO, LOW PROFILE GRAY FLANGE KIT	B	$ 45.53
10092R	LED 10 SERIES COMBO, LOW PROFILE GRAY FLANGE KIT	B	$ 48.77
10092Y	LED 10 SERIES COMBO, LOW PROFILE GRAY FLANGE KIT	B	$ 46.70
10133	SERIES 33 FLANGE GRY PC MOUNT	C	$ 4.50
10136	SERIES 36 GRY FLANGE PC MOUNT	C	$ 4.50
102	HEAVY DUTY PULL/PURSH SWITCH	A	$ 78.77
102-3	HEAVY DUTY PULL/PURSH SWITCH, BULK	A	$ 58.43
10202B	10 SERIES M/C LAMP	C	$ 7.93
10202C	10 SERIES M/C LAMP	B	$ 5.80
10202C3	10 SERIES M/C LAMP, BULK	B	$ 5.23
10202G	10 SERIES M/C LAMP	C	$ 7.93
10202R	10 SERIES M/C LAMP	A	$ 4.93
10202R3	10 SERIES M/C LAMP, BULK	A	$ 3.64
10202RP	10 SERIES M/C LAMP, PALLET	A	$ 3.50
10202Y	10 SERIES M/C LAMP	A	$ 4.93
10202Y3	10 SERIES M/C LAMP, BULK	A	$ 3.64
10202YP	10 SERIES M/C LAMP, PALLET	A	$ 3.50
10203R	10 SERIES BEEHIVE LAMP	B	$ 5.87
10203Y	10 SERIES BEEHIVE LAMP	B	$ 5.87
10204C	10 SERIES M/C LAMP 24 VOLT	D	$ 8.03
10204R	10 SERIES M/C LAMP 24 VOLT	D	$ 9.20
10204Y	10 SERIES M/C LAMP 24 VOLT	D	$ 9.20
10205R	10 SERIES M/C LAMP W/REFLECTOR	A	$ 5.47
10205R3	10 SERIES M/C LAMP W/REFLECTOR, BULK	A	$ 3.94
10205RP	10 SERIES M/C LAMP W/REFLECTOR, PALLET	A	$ 3.74
10205Y	10 SERIES M/C LAMP W/REFLECTOR	A	$ 5.47
10205Y3	10 SERIES M/C LAMP W/REFLECTOR, BULK	A	$ 3.94
10205YP	10 SERIES M/C LAMP W/REFLECTOR, PALLET	A	$ 3.74
10208R	SUPER 10 M/C LAMP	A	$ 7.47

10208R3	SUPER 10 M/C LAMP, BULK	A	$ 6.73
10208Y	SUPER 10 M/C LAMP	A	$ 7.47
10208Y3	SUPER 10 M/C LAMP, BULK	A	$ 6.73
10209C	SUPER 10 UTILITY LAMP	D	$ 8.80
10209C3	SUPER 10 UTILITY LAMP, BULK	D	$ 7.97
10212Y	SUPER 10 M/C LAMP W/"ABS" LOGO HORIZONTAL	A	$ 6.39
10213Y	SUPER 10 M/C LAMP W/"ABS" LOGO VERTICAL	C	$ 7.60
10250R	LED 10 SERIES M/C LAMP	A	$ 17.31
10250R3	LED 10 SERIES M/C LAMP, BULK	A	$ 16.39
10250Y	LED 10 SERIES M/C LAMP	B	$ 18.53
10250Y3	LED 10 SERIES M/C LAMP, BULK	B	$ 17.58
10251R	LED 10 SERIES M/C LAMP AND FLANGE	A	$ 21.36
10251R3	LED 10 SERIES M/C LAMP AND FLANGE, BULK	A	$ 20.27
10251Y	LED 10 SERIES M/C LAMP AND FLANGE	A	$ 22.68
10251Y3	LED 10 SERIES M/C LAMP AND FLANGE, BULK	A	$ 21.56
10256R	10 SERIES M/C 10-30 VOLT LAMP	W	$ 34.57
10256Y	10 SERIES M/C 10-30 VOLT LAMP	W	$ 31.20
10271Y	LED 10 SERIES ABS, 12 VOLT, FLANGE	C	$ 35.87
10275R	LED 10 SERIES M/C LAMP 10-30 VOLT	B	$ 43.73
10275R3	LED 10 SERIES M/C LAMP 10-30 VOLT, BULK	B	$ 41.60
10275Y	LED 10 SERIES M/C LAMP 10-30 VOLT	B	$ 43.73
10275Y3	LED 10 SERIES M/C LAMP 10-30 VOLT, BULK	B	$ 41.60
10276R	LED 10 SERIES BEEHIVE LAMP	B	$ 41.20
10276Y	LED 10 SERIES BEEHIVE LAMP	B	$ 41.20
10279R	LED 10 SERIES COMBO LAMP AND FLANGE	B	$ 51.67
10279Y	LED 10 SERIES COMBO LAMP AND FLANGE	B	$ 51.67
10286R	LED 10 SERIES LOW PROFILE COMBO M/C LAMP, 12 VOLT	A	$ 45.26
10286Y	LED 10 SERIES LOW PROFILE COMBO M/C LAMP, 12 VOLT	A	$ 43.53
10288R	LED 10 SERIES LOW PROFILE COMBO M/C LAMP, 12 VOLT W/BLACK FLANGE	A	$ 48.29
10288Y	LED 10 SERIES LOW PROFILE COMBO M/C LAMP, 12 VOLT W/BLACK FLANGE	A	$ 46.35
10288Y3	LED 10 SERIES LOW PROFILE COMBO M/C LAMP, 12 VOLT W/BLACK FLANGE, BULK	A	$ 44.04
10289R	LED 10 SERIES LOW PROFILE COMBO M/C LAMP, 12 VOLT W/GRAY FLANGE	A	$ 48.29
10289Y	LED 10 SERIES LOW PROFILE COMBO M/C LAMP, 12 VOLT W/GRAY FLANGE	A	$ 46.35
10375R	LED 10 SERIES COMBO LAMP	B	$ 41.83
10375Y	LED 10 SERIES COMBO LAMP	B	$ 39.13
10379R	LED 10 SERIES COMBO LAMP W/ GRAY FLANGE	B	$ 43.77
10379Y	LED 10 SERIES COMBO LAMP W/ GRAY FLANGE	B	$ 41.97
10385R	LED 10 SERIES COMBO, LOW PROFILE LAMP	B	$ 37.13
10385Y	LED 10 SERIES COMBO, LOW PROFILE LAMP	B	$ 35.50
10389R	LED 10 SERIES COMBO, LOW PROFILE LAMP W/ GRY FLANGE	B	$ 40.27
10389Y	LED 10 SERIES COMBO, LOW PROFILE LAMP W/ GRY FLANGE	B	$ 38.30
10391R	LED 10 SERIES LOW PROFILE LAMP W/ BLK FLANGE AND GASKET	B	$ 41.57
10391Y	LED 10 SERIES LOW PROFILE LAMP W/ BLK FLANGE AND GASKET	B	$ 39.43
10400	10 SERIES SURFACE MOUNT BRACKET	D	$ 5.00
10401	10 SERIES OPEN BACK GROMMET MOUNT KIT	A	$ 6.29
10401-3	10 SERIES OPEN BACK GROMMET MOUNT KIT, BULK	A	$ 5.43
10402	10 SERIES CLOSED BACK GROMMET MOUNT KIT	B	$ 6.67
10403	10 SERIES GROMMET KIT	D	$ 9.03
10404	10 SERIES 3" GROMMET MOUNT KIT	B	$ 6.67
10410	10 SERIES CAM IN BRACKET	B	$ 8.07
10412	10 SERIES OPEN BACK GROMMET MOUNT KIT	D	$ 14.20

10413	10 SERIES CLOSED BACK GROMMET MOUNT KIT	W	$ 14.30
10414	10 SERIES BRANCH DEFLECTOR MOUNT KIT	A	$ 10.45
1050	LED SIGNAL STAT M/C 2 1/2 " LAMP	B	$ 15.20
1050-3	LED SIGNAL STAT M/C 2 1/2 " LAMP, BULK	B	$ 14.45
1050A	LED SIGNAL STAT M/C 2 1/2 " LAMP	B	$ 15.20
1050A-3	LED SIGNAL STAT M/C 2 1/2 " LAMP, BULK	B	$ 14.45
1051	LED SIGNAL STAT M/C 2 1/2 " LAMP CLEAR LENS	D	$ 16.22
1051-3	LED SIGNAL STAT M/C 2 1/2 " LAMP CLEAR LENS, BULK	D	$ 15.40
10519R	10 SERIES GROMMET MOUNT KIT	B	$ 11.13
10519Y	10 SERIES GROMMET MOUNT KIT	B	$ 11.13
1051A	LED SIGNAL STAT M/C 2 1/2" ROUND LAMP CLEAR LENS	D	$ 16.22
1051A-3	LED SIGNAL STAT M/C 2 1/2" ROUND LAMP CLEAR LENS, BULK	D	$ 15.40
1052	LED SIGNAL STAT M/C 2 1/2 " ROUND LAMP, REFLECTIVE LENS	B	$ 17.58
1052-3	LED SIGNAL STAT M/C 2 1/2 " ROUND LAMP, REFLECTIVE LENS, BULK	B	$ 16.69
10520Y	10 SERIES BRANCH DEFLECTOR MOUNT KIT	B	$ 15.03
10525R	10 SERIES W/ REFLEX GROMMET MOUNT KIT	A	$ 11.27
10525Y	10 SERIES W/ REFLEX GROMMET MOUNT KIT	A	$ 11.27
1052A	LED SIGNAL STAT M/C 2 1/2 " ROUND LAMP, REFLECTIVE LENS	B	$ 17.58
1052A-3	LED SIGNAL STAT M/C 2 1/2 " ROUND LAMP, REFLECTIVE LENS, BULK	B	$ 16.69
1053	LED SIGNAL STAT M/C 2 1/2 " LAMP W/ INT FLANGE, RED	B	$ 16.70
1053-3	LED SIGNAL STAT M/C 2 1/2 " LAMP W/ INT FLANGE, RED, BULK	B	$ 15.87
1053A	LED SIGNAL STAT M/C 2 1/2 " LAMP W/ INT FLANGE, AMBER	B	$ 16.70
1053A-3	LED SIGNAL STAT M/C 2 1/2 " LAMP W/ INT FLANGE, AMBER, BULK	B	$ 15.87
1058	LED SIGNAL STAT M/C 2 1/2 " 1 DIODE LAMP, RED	B	$ 13.17
1058-3	LED SIGNAL STAT M/C 2 1/2 " 1 DIODE LAMP, RED, BULK	B	$ 11.87
1058A	LED SIGNAL STAT M/C 2 1/2 " 1 DIODE LAMP, AMBER	B	$ 13.17
1058A-3	LED SIGNAL STAT M/C 2 1/2 " 1 DIODE LAMP, AMBER, BULK	B	$ 11.87
1070	1050 LAMP W/GRAY FLANGE	W	$ 20.45
10700	10 SERIES WIDE GROOVE OPEN BACK GROMMET	A	$ 3.15
10700-3	10 SERIES WIDE GROOVE OPEN BACK GROMMET, BULK	A	$ 2.44
10701	10 SERIES WIDE GROOVE OPEN BACK GROMMET	C	$ 3.57
10702	10 SERIES WIDE GROOVE CLOSED BACK GROMMET	A	$ 3.26
10702-3	10 SERIES WIDE GROOVE CLOSED BACK GROMMET, BULK	A	$ 2.82
10704	10 SERIES 3" GROMMET MOUNT	A	$ 3.26
10704-3	10 SERIES 3" GROMMET MOUNT, BULK	A	$ 2.82
10706	10 SERIES GROMMET, WHITE	C	$ 3.93
10708	10 SERIES GROMMET	C	$ 5.57
1070A	1050 LAMP W/GRAY FLANGE	W	$ 20.03
10713	10 SERIES NARROW GROOVE OPEN BACK GROMMET	C	$ 3.93
10714	10 SERIES NARROW GROOVE CLOSED BACK GROMMET	C	$ 3.93
10715	10 SERIES POLISHED SS FLANGE COVER	C	$ 6.63
10718	10 SERIES TRP CLOSED BACK GROMMET	C	$ 6.87
10719	10 SERIES POLISHED SS GROMMET COVER W/VISOR	C	$ 9.00
10720	10 SERIES MOUNT	C	$ 1.50
10721	10 SERIES CAM-ON CLEAR MOUNT W/O RIBS	C	$ 5.17
10722	10 SERIES SURFACE MOUNT	W	$ 10.50
10724	10 SERIES CAM-ON GRAY MOUNT W/O RIBS	D	$ 5.30
10725	10 SERIES GRAY MOUNT	B	$ 4.47
10727	10 SERIES CAM-ON CLEAR MOUNT 8-1/2" RADIUS	B	$ 4.47
10728	10 SERIES CAM-ON GRAY MOUNT	B	$ 4.47
10729	10 SERIES L MOUNTING BRACKET - METAL	B	$ 8.83

10729-3	10 SERIES L MOUNTING BRACKET - METAL, BULK	B	$ 8.00
10730	10 SERIES L MOUNTING BRACKET - METAL	D	$ 9.90
10731	10 SERIES GRAY MOUNT	C	$ 6.03
10732	10 SERIES ID BRACKET	W	$ 162.17
10738	10 SERIES CAM-ON MOUNT, GRAY	C	$ 7.37
10740	10 SERIES CURVED MOUNT	C	$ 8.20
10744R	10 SERIES ID BAR KIT - 6" CENTERS	A	$ 41.75
10744R3	10 SERIES ID BAR KIT - 6" CENTERS, BULK	A	$ 37.80
10745R	10 SERIES ID BAR KIT - 9" CENTERS	W	$ 48.43
1075	LED 2.5" MARKER CLEARANCE BEEHIVE LAMP, 12V	B	$ 16.52
1075-3	LED 2.5" MARKER CLEARANCE BEEHIVE LAMP, 12V, BULK	B	$ 15.71
1075A	LED 2.5" MARKER CLEARANCE BEEHIVE LAMP, 12V	B	$ 16.52
1075A-3	LED 2.5" MARKER CLEARANCE BEEHIVE LAMP, 12V, BULK	B	$ 15.71
1076	LED SIGNAL-STAT 10 SERIES BEEHIVE W/CLEAR LENS	B	$ 16.52
1076A	LED SIGNAL-STAT 10 SERIES BEEHIVE W/CLEAR LENS	B	$ 16.52
1101	12 SERIES "THE GUARDIAN" DEFLECTOR MOUNT, STEEL	D	$ 26.17
1101A	12 SERIES "THE GUARDIAN" DEFLECTOR MOUNT, STEEL	D	$ 26.17
1102	12 SERIES "THE GUARDIAN" DEFLECTOR MOUNT,ALUMINUM	W	$ 29.23
1102A	12 SERIES "THE GUARDIAN" DEFLECTOR MOUNT,ALUMINUM	W	$ 29.23
1105	12 SERIES "THE GUARDIAN" DEFLECTOR MOUNT,STEEL SHOCK/MNT.	D	$ 33.03
1105A	12 SERIES "THE GUARDIAN" DEFLECTOR MOUNT, STEEL SHOCK/MNT.	D	$ 33.03
1105W	12 SERIES "THE GUARDIAN" DEFLECTOR MOUNT, STEEL SHOCK/MNT.	D	$ 33.03
1115	M/C BRIGHT ZINC FINISH BULB REPLACEABLE LAMP	C	$ 43.37
1115A	M/C BRIGHT ZINC FINISH BULB REPLACEABLE LAMP	C	$ 43.37
1116	M/C ARMORED MARKER DESIGN BULB REPLACEABLE LAMP	C	$ 44.40
1116A	M/C ARMORED MARKER DESIGN BULB REPLACEABLE LAMP	C	$ 44.40
1150	M/C SCHOOL BUS BULB REPLACEABLE LAMP	C	$ 24.00
1150-3	M/C SCHOOL BUS BULB REPLACEABLE LAMP, BULK	C	$ 21.73
1150A	M/C SCHOOL BUS BULB REPLACEABLE LAMP	C	$ 24.00
1150A-3	M/C SCHOOL BUS BULB REPLACEABLE LAMP, BULK	C	$ 21.73
1155	M/C TRIANGLE LAMP 12V	B	$ 32.93
1155A	M/C TRIANGLE LAMP 12V	B	$ 32.93
12001R	12 SERIES M/C BROWN BRANCH DEFLECTOR KIT	C	$ 14.60
12001Y	12 SERIES M/C BROWN BRANCH DEFLECTOR KIT	C	$ 14.60
12003R	12 SERIES M/C GRY BRANCH DEFLECTOR KIT	D	$ 15.20
12003Y	12 SERIES M/C GRY BRANCH DEFLECTOR KIT	D	$ 15.20
1203	26 SERIES M/C LAMP W/DIE CAST HSNG.	A	$ 30.93
1203-3	26 SERIES M/C LAMP W/DIE CAST HSNG, BULK	A	$ 27.83
1203A	26 SERIES M/C LAMP W/DIE CAST HSNG.	A	$ 30.93
1203A-3	26 SERIES M/C LAMP W/DIE CAST HSNG, BULK	A	$ 27.83
1211	26 SERIES M/C LAMP W/PERMASTAT CAST HSNG	A	$ 7.50
1211-3	26 SERIES M/C LAMP W/PERMASTAT CAST HSNG, BULK	A	$ 6.77
1211A	26 SERIES M/C LAMP W/PERMASTAT CAST HSNG	A	$ 7.50
1211A-3	26 SERIES M/C LAMP W/PERMASTAT CAST HSNG, BULK	A	$ 6.77
1211W	26 SERIES M/C LAMP W/PERMASTAT CAST HSNG.	B	$ 12.77
1213	26 SERIES M/C LAMP W/PERMASTAT CAST HSNG.	A	$ 24.57
1213A	26 SERIES M/C LAMP W/PERMASTAT CAST HSNG.	A	$ 24.57
1215	26 SERIES "ABS" ID BAR KIT, BLACK	B	$ 66.30
1216	26 SERIES "ABS" ID BAR KIT, WHITE	B	$ 65.80
1216A	26 SERIES "ABS" ID BAR KIT, WHITE	B	$ 65.80
12200C	12 SERIES M/C LAMP	W	$ 5.93

12200R	12 SERIES M/C LAMP	C	$ 5.93
12200R3	12 SERIES M/C LAMP, BULK	C	$ 5.40
12200Y	12 SERIES M/C LAMP	C	$ 5.93
12200Y3	12 SERIES M/C LAMP, BULK	C	$ 5.40
12201Y	12 SERIES M/C LAMP	C	$ 7.60
1222	26 SERIES REFLECTORIZED M/C LAMP W/PLASTIC HSNG.	C	$ 13.90
1222A	26 SERIES REFLECTORIZED M/C LAMP W/PLASTIC HSNG.	C	$ 13.90
12275R	LED 12 SERIES M/C LAMP 6 DIODE PATTERN	B	$ 42.00
12275Y	LED 12 SERIES M/C LAMP 6 DIODE PATTERN	B	$ 42.00
1233	SHOCK/MOUNT EXTENDED BRACKET BULB REPLACEABLE PC LAMP	W	$ 22.07
1233A	SHOCK/MOUNT EXTENDED BRACKET BULB REPLACEABLE PC LAMP	W	$ 22.07
1259	26 SERIES M/C LAMP	A	$ 7.53
1259-3	26 SERIES M/C LAMP, BULK	A	$ 6.80
1259A	26 SERIES M/C LAMP	A	$ 7.53
1259A-3	26 SERIES M/C LAMP, BULK	A	$ 6.80
1259G	26 SERIES M/C LAMP	C	$ 11.80
1259G-3	26 SERIES M/C LAMP, BULK	C	$ 10.70
1264	26 SERIES REFLECTORIZED M/C LAMP	B	$ 14.27
1264-3	26 SERIES REFLECTORIZED M/C LAMP, BULK	B	$ 8.93
1264A	26 SERIES REFLECTORIZED M/C LAMP	B	$ 14.27
1264A-3	26 SERIES REFLECTORIZED M/C LAMP, BULK	B	$ 8.93
12723	12 SERIES DEFLECTOR MOUNT, GRAY	C	$ 2.47
12724	12 SERIES DEFLECTOR MOUNT, BROWN	C	$ 3.40
12725	12 SERIES DEFLECTOR MOUNT, BLACK	C	$ 3.20
1294	26 SERIES STARBURST M/C LAMP	B	$ 7.60
1294A	26 SERIES STARBURST M/C LAMP	B	$ 7.60
1294W	26 SERIES STARBURST M/C LAMP	B	$ 7.60
13001C	13 SERIES EUROPEAN APPROVED OUTLINE MARKER, CLEAR KIT	W	$ 32.86
13001G	13 SERIES EUROPEAN APPROVED "ABS" WARNING, GREEN KIT	W	$ 32.86
13001R	13 SERIES EUROPEAN APPROVED END OUTLINE, RED KIT	D	$ 32.86
13001Y	13 SERIES EUROPEAN APPROVED SIDE MARKER, YELLOW KIT	D	$ 32.86
13011C	13 SERIES EUROPEAN APPROVED OUTLINE MARKER, CLEAR KIT	D	$ 38.12
13011R	13 SERIES EUROPEAN APPROVED END OUTLINE, RED KIT	D	$ 38.12
13011Y	13 SERIES EUROPEAN APPROVED SIDE MARKER, YELLOW KIT	D	$ 38.12
131	PURSH BUTTON	C	$ 20.47
1312A	DIE CAST CHROME CAB MARKER	D	$ 70.67
1312A-3	DIE CAST CHROME CAB MARKER, BULK	B	$ 59.67
1313A	RUBBER BASE BULB REPLACEABLE CAB MARKER	C	$ 28.20
1319	CHROME BULB REPL. CAB MARKER	D	$ 45.87
1319A	CHROME BULB REPL. CAB MARKER	D	$ 45.87
13200C	13 SERIES EUROPEAN APPROVED OUTLINE MARKER, CLEAR	D	$ 29.00
13200G	13 SERIES EUROPEAN APPROVED "ABS" WARNING, GREEN	D	$ 29.00
13200R	13 SERIES EUROPEAN APPROVED SIDE MARKER, RED	D	$ 29.00
13200Y	13 SERIES EUROPEAN APPROVED SIDE MARKER, YELLOW	D	$ 29.00
1320A	CAB MARKER LAMP	D	$ 35.63
1320A-3	CAB MARKER LAMP, BULK	D	$ 32.03
13210C	13 SERIES EUROPEAN APPROVED OUTLINE MARKER, CLEAR	D	$ 39.29
13210R	13 SERIES EUROPEAN APPROVED SIDE MARKER, YELLOW	D	$ 39.29
13210Y	13 SERIES EUROPEAN APPROVED SIDE MARKER, RED	D	$ 39.29
1350A	CHROME BULB REPLACEABLE CAB MARKER	D	$ 81.70
1365A	OBSOLETE		

14200R	14 SERIES M/C LAMP 12 VOLT	B	$ 7.23
14200Y	14 SERIES M/C LAMP 12 VOLT	B	$ 7.23
14700	14 SERIES GROMMET MOUNT, WHITE	B	$ 3.67
14700-3	14 SERIES GROMMET MOUNT, WHITE, BULK	B	$ 3.17
14701	14 SERIES GROMMET MOUNT, BLACK	C	$ 3.93
15006Y	15 SERIES HEADER MOUNT KIT	D	$ 14.97
15008R	15 SERIES HEADER MOUNT KIT	C	$ 14.97
15008Y	15 SERIES HEADER MOUNT KIT	C	$ 14.97
15011	15 SERIES LICENSE KIT, GRAY	A	$ 12.34
15011-3	15 SERIES LICENSE KIT, GRAY, BULK	A	$ 10.95
15012	15 SERIES LICENSE KIT, BLACK	B	$ 12.60
15013	15 SERIES LICENSE KIT	B	$ 32.77
15033R	LED 15 SERIES ADAPTER MOUNT KIT	A	$ 26.32
15033Y	LED 15 SERIES ADAPTER MOUNT KIT	A	$ 27.68
15040	LED 15 SERIES LICENSE KIT 12 VOLT, GRAY	A	$ 83.09
15040-3	LED 15 SERIES LICENSE KIT 12 VOLT, GRAY, BULK	A	$ 79.31
15041	LED 15 SERIES LICENSE KIT 12 VOLT, BLACK	A	$ 83.39
15042	LED 15 SERIES LICENSE KIT 24 VOLT, GRAY	A	$ 91.89
15043	LED 15 SERIES LICENSE KIT 24 VOLT, BLACK	A	$ 91.75
15050R	LED 15 SERIES ID BAR KIT - 6" CENTERS	A	$ 77.91
15050Y	LED 15 SERIES ID BAR KIT - 6" CENTERS	W	$ 109.30
15053	LED 15 SERIES LICENSE LAMP KIT, DIAMOND SHELL, 12 VOLT	A	$ 110.62
15054	LED 15 SERIES LICENSE LAMP KIT, DIAMOND SHELL, 12 VOLT	A	$ 93.69
15055	LED 15 SERIES LICENSE LAMP KIT, 12 VOLT, CHROME BRACKET	B	$ 113.63
15058	LED 15 SERIES LICENSE LAMP KIT, 12 VOLT, BLACK BRACKET	B	$ 97.10
15059	LED 15 SERIES LICENSE LAMP KIT, DIAMOND SHELL, 12 VOLT, CHROME BRACKET	B	$ 133.00
1506	M/C RUBBER BODY MOUNT BULB REPLACEABLE LAMP	A	$ 18.17
1506-3	M/C RUBBER BODY MOUNT BULB REPLACEABLE LAMP, BULK	A	$ 16.23
15061	LED 15 SERIES LICENSE LAMP KIT, DIAMOND SHELL, 12 VOLT, BLACK BRACKET	B	$ 114.70
1506A	M/C RUBBER BODY MOUNT BULB REPLACEABLE LAMP	A	$ 18.17
1506A-3	M/C RUBBER BODY MOUNT BULB REPLACEABLE LAMP, BULK	A	$ 16.23
1506W	M/C RUBBER BODY MOUNT BULB REPLACEABLE LAMP (UTILITY LIGHT)	D	$ 20.27
1507	26 SERIES PEE-WEE M/C LAMP	C	$ 7.00
15078	OBSOLETE		
1507A	26 SERIES PEE-WEE M/C LAMP	C	$ 7.00
1508R	"PEE WEE" STEEL IDENTIFICATION BAR	C	$ 28.43
15096	LED LAMP KIT, LICENSE, W/ BRACKET & GROMMET 12V	C	$ 126.43
1520	26 SERIES ULTRA-SLIM M/C	B	$ 15.20
1520-3	26 SERIES ULTRA-SLIM M/C, BULK	B	$ 13.03
15200C	15 SERIES UTILITY LAMP	B	$ 5.83
15200C3	15 SERIES UTILITY LAMP, BULK	B	$ 5.07
15200CP	15 SERIES UTILITY LAMP, PALLET	B	$ 4.83
15200R	15 SERIES M/C 12 VOLT	A	$ 5.39
15200R3	15 SERIES M/C 12 VOLT, BULK	A	$ 4.26
15200RP	15 SERIES M/C 12 VOLT, PALLET	A	$ 4.05
15200Y	15 SERIES M/C 12 VOLT	A	$ 5.39
15200Y3	15 SERIES M/C 12 VOLT, BULK	A	$ 4.26
15200YP	15 SERIES M/C 12 VOLT, PALLET	A	$ 4.05
15201R	15 SERIES M/C 24 VOLT	C	$ 8.10
15201Y	15 SERIES M/C 24 VOLT	C	$ 8.10
15203Y	15 SERIES M/C LAMP W/"ABS" LOGO	C	$ 6.80

15205	LED 15 SERIES LICENSE LAMP, 12 VOLT	A	$ 51.09
15205-3	LED 15 SERIES LICENSE LAMP, 12 VOLT, BULK	A	$ 48.52
15208	15 SERIES LICENSE LAMP 12 VOLT	A	$ 5.42
15208-3	15 SERIES LICENSE LAMP 12 VOLT, BULK	A	$ 4.74
15209	15 SERIES LICENSE LAMP 24 VOLT	C	$ 8.50
1520A	26 SERIES ULTRA-SLIM M/C	C	$ 16.20
1520AHT	26 SERIES ULTRA-SLIM M/C KIT	B	$ 16.43
1520HT	26 SERIES ULTRA-SLIM M/C KIT	B	$ 16.43
15226	LED 15 SERIES LICENSE LAMP KIT, DIAMOND SHELL, 12 VOLT, CHROME BRACKET	A	$ 102.63
15227	LED 15 SERIES LICENSE LAMP KIT, 12 VOLT, BLACK BRACKET	A	$ 51.10
1523	ULTRA-SLIM ALUMINUM IDENTIFICATION BAR	C	$ 84.43
15250R	LED 15 SERIES M/C LAMP	A	$ 19.21
15250R3	LED 15 SERIES M/C LAMP, BULK	A	$ 18.23
15250Y	LED 15 SERIES M/C LAMP	A	$ 20.57
15250Y3	LED 15 SERIES M/C LAMP, BULK	A	$ 19.52
15401	15 SERIES BRANCH DEFLECTOR MOUNT KIT	B	$ 6.57
15401-3	15 SERIES BRANCH DEFLECTOR MOUNT KIT, BULK	B	$ 6.00
15404	15 SERIES ADAPTER MOUNT KIT, GRAY	C	$ 8.93
15405	15 SERIES ADAPTER MOUNT KIT, CHROME	C	$ 12.37
15406	15 SERIES ADAPTER MOUNT KIT, GRAY	C	$ 10.87
15407	15 SERIES ADAPTER MOUNT KIT, CHROME	B	$ 8.27
15408	15 SERIES MARINE BLACK ADAPTER KIT	C	$ 8.33
15409	15 SERIES MARINE CHROME ADAPTER KIT	C	$ 8.87
15412	15 SERIES RAIL MOUNT KIT	C	$ 8.83
15413	15 SERIES RAIL MOUNT KIT	D	$ 12.10
15414	15 SERIES SURFACE MOUNT KIT	A	$ 7.94
15415	15 SERIES DUAL FACE KIT, RH	B	$ 19.63
15416	15 SERIES DUAL FACE KIT, LH	B	$ 19.63
15417	15 SERIES DUAL FACE KIT, RH	B	$ 55.10
15418	15 SERIES DUAL FACE KIT, LH	B	$ 55.10
1550	ULTRA-SLIM M/C W/SURFACE MOUNT	W	$ 27.63
1550A	ULTRA-SLIM M/C W/SURFACE MOUNT	W	$ 27.63
15506R	15 SERIES ADAPTER KIT, CHROME	B	$ 13.10
15506Y	15 SERIES ADAPTER KIT, CHROME	B	$ 13.10
1551	ULTRA-SLIM M/C W/RAIL MOUNT	D	$ 24.90
1551A	ULTRA-SLIM M/C W/RAIL MOUNT	D	$ 24.90
1555	SLIM LINE BULB REPLACEABLE	D	$ 18.43
1555A	SLIM LINE BULB REPLACEABLE	D	$ 18.43
1560	LED SIGNAL STAT M/C RECTANGULAR	B	$ 12.10
1560-3	LED SIGNAL STAT M/C RECTANGULAR, BULK	B	$ 11.49
1560A	LED SIGNAL STAT M/C RECTANGULAR	B	$ 12.10
1560A-3	LED SIGNAL STAT M/C RECTANGULAR, BULK	B	$ 11.49
1561	LED SIGNAL STAT M/C RECTANGULAR W/CLEAR LENS	B	$ 12.10
1561-3	LED SIGNAL STAT M/C RECTANGULAR W/CLEAR LENS, BULK	B	$ 11.49
1561A	LED SIGNAL STAT M/C RECTANGULAR W/CLEAR LENS	B	$ 12.10
1561A-3	LED SIGNAL STAT M/C RECTANGULAR W/CLEAR LENS, BULK	B	$ 11.49
1570	M/C REFLECTORIZED BULB REPLACEABLE LAMP	B	$ 11.23
1570A	M/C REFLECTORIZED BULB REPLACEABLE LAMP	B	$ 11.23
15702	15 SERIES FLUSH MOUNT GROMMET	B	$ 3.33
1571	M/C REFLECTORIZED BULB REPLACEABLE LAMP	B	$ 11.50
1571A	M/C REFLECTORIZED BULB REPLACEABLE LAMP	B	$ 11.50

15720	MDL BRANCH DEFLECTOR MOUNT, GRAY	D	$ 5.53
15727	15 SERIES RAIL MOUNT	C	$ 4.93
15728	15 SERIES SURFACE MOUNT	C	$ 4.93
15729	15 SERIES LICENSE MOUNTING BRACKET, GRAY	C	$ 8.53
15730	15 SERIES LICENSE MOUNTING BRACKET, BLACK	D	$ 8.40
15731	15 SERIES DUAL FACEd BRACKET	B	$ 3.53
15732	15 SERIES DUAL FACEd BRACKET, CHROME	C	$ 30.27
15733	15 SERIES RAIL MOUNT	C	$ 6.17
15736	15 SERIES LICENSE LAMP BRACKET	W	$ 6.13
15741R	15 SERIES SS ID BAR KIT	B	$ 37.43
15741R3	15 SERIES SS ID BAR KIT, BULK	B	$ 33.83
15745R	15 SERIES PLASTIC ID BAR KIT	B	$ 39.83
15745Y	15 SERIES PLASTIC ID BAR KIT	B	$ 39.83
15905	LED 15 SERIES LICENSE LAMP 24 VOLT	A	$ 83.90
1590A	M/C REFLECTORIZED BULB REPLACEABLE LAMP	W	$ 78.27
17001	17 SERIES LICENSE KIT	B	$ 29.77
17002	17 SERIES LICENSE KIT	B	$ 29.77
17003	17 SERIES LICENSE KIT	B	$ 39.57
172	ELECTRONIC FLASHER, 2 TERMINAL	C	$ 27.63
172-3	ELECTRONIC FLASHER, 2 TERMINAL, BULK	C	$ 19.50
17200	17 SERIES LICENSE LAMP	B	$ 27.10
173	ELECTRONIC FLASHER, 3 TERMINAL	W	$ 33.40
17720	17 SERIES LICENSE MOUNTING BRACKET	W	$ 12.43
18011C	LED 18 SERIES EUROPEAN APPROVED 10-30 VOLT KIT	A	$ 80.09
18011R	LED 18 SERIES EUROPEAN APPROVED 10-30 VOLT KIT	A	$ 59.00
18011Y	LED 18 SERIES EUROPEAN APPROVED 10-30 VOLT KIT	A	$ 57.77
18011Y3	LED 18 SERIES EUROPEAN APPROVED 10-30 VOLT KIT, BULK	A	$ 54.91
18050R	LED 18 SERIES M/C LAMP KIT, DIAMOND SHELL	A	$ 56.86
18050R3	LED 18 SERIES M/C LAMP KIT, DIAMOND SHELL, BULK	A	$ 54.04
18050Y	LED 18 SERIES M/C LAMP KIT, DIAMOND SHELL	A	$ 56.86
18050Y3	LED 18 SERIES M/C LAMP KIT, DIAMOND SHELL, BULK	A	$ 54.04
18060R	LED 18 SERIES M/C LAMP KIT, DIAMOND SHELL	A	$ 60.33
18060Y	LED 18 SERIES M/C LAMP KIT, DIAMOND SHELL	A	$ 58.25
18070R	LED 18 SERIES M/C LAMP KIT, DIAMOND SHELL	A	$ 59.27
18070Y	LED 18 SERIES M/C LAMP KIT, DIAMOND SHELL	A	$ 58.49
18085R	LED MODEL 18 CLEARANCE MARKER MILITARY LAMP	D	$ 58.97
18085Y	LED MODEL 18 CLEARANCE MARKER MILITARY LAMP	D	$ 58.97
18088R	LED MODEL 18 CLEARANCE MARKER MILITARY LAMP	D	$ 64.63
18088Y	LED MODEL 18 CLEARANCE MARKER MILITARY LAMP	D	$ 64.63
18090R	LED 18 SERIES M/C LAMP KIT, DIAMOND SHELL	A	$ 55.73
18090Y	LED 18 SERIES M/C LAMP KIT, DIAMOND SHELL	A	$ 55.73
182	16 LAMP 12 VOLT FLASHER RATED FOR 35 AMPS, 2 TERMINAL	W	$ 44.33
183	17 LAMP 12 VOLT FLASHER RATED FOR 35 AMPS, 3 TERMINAL	W	$ 46.00
18300R	18 SERIES M/C KIT	B	$ 8.57
18300R3	18 SERIES M/C KIT, BULK	B	$ 8.17
18300Y	18 SERIES M/C KIT	B	$ 8.57
18300Y3	18 SERIES M/C KIT, BULK	B	$ 8.17
190	HEAVY DUTY ISO BASE RELAY	W	$ 19.53
19002R	19 SERIES BASE MOUNT KIT, GRAY	A	$ 12.23
19002R3	19 SERIES BASE MOUNT KIT, GRAY. BULK	A	$ 10.00
19002Y	19 SERIES BASE MOUNT KIT, GRAY	A	$ 12.23

19002Y3	19 SERIES BASE MOUNT KIT, GRAY, BULK	A	$ 10.00
19006R	LED 19 SERIES BASE MOUNT KIT	B	$ 26.13
19006Y	LED 19 SERIES BASE MOUNT KIT	B	$ 27.20
19009R	19 SERIES BASE MOUNT KIT, CHROME	A	$ 13.30
19009Y	19 SERIES BASE MOUNT KIT, CHROME	A	$ 13.30
19020R	LED 19 SERIES COMBO LAMP KIT	B	$ 37.73
19020Y	LED 19 SERIES COMBO LAMP KIT	B	$ 40.00
19031R	LED 19 SERIES BASE MOUNT KIT, CHROME	B	$ 26.83
19031Y	LED 19 SERIES BASE MOUNT KIT, CHROME	B	$ 31.43
19032R	LED 19 SERIES BASE MOUNT KIT, BLACK	B	$ 26.03
19032Y	LED 19 SERIES BASE MOUNT KIT, BLACK	B	$ 30.60
19036R	LED 19 SERIES COMBO LAMP KIT, CHROME	B	$ 38.90
19036Y	LED 19 SERIES COMBO LAMP KIT, CHROME	B	$ 42.30
19037Y	LED 19 SERIES COMBO LAMP KIT, BLACK	B	$ 42.30
191	HEAVY DUTY ISO BASE RELAY	W	$ 16.03
192	HEAVY DUTY ISO BASE RELAY	A	$ 11.23
19200C	19 SERIES UTILITY LAMP	C	$ 8.13
19200R	19 SERIES M/C LAMP	A	$ 6.37
19200R3	19 SERIES M/C LAMP, BULK	A	$ 4.63
19200RP	19 SERIES M/C LAMP, PALLET	A	$ 4.40
19200Y	19 SERIES M/C LAMP	A	$ 6.37
19200Y3	19 SERIES M/C LAMP, BULK	A	$ 4.63
19200YP	19 SERIES M/C LAMP, PALLET	A	$ 4.40
19205Y	19 SERIES "ABS" LAMP	B	$ 7.13
19206	19 SERIES LICENSE LAMP	A	$ 8.40
19206-3	19 SERIES LICENSE LAMP, BULK	A	$ 6.87
192-4	HEAVY DUTY ISO BASE RELAY, 24 VOLT	D	$ 18.10
192D	HEAVY DUTY ISO BASE RELAY	A	$ 16.57
19250R	LED 19 SERIES M/C LAMP	B	$ 18.97
19250R3	LED 19 SERIES M/C LAMP, BULK	B	$ 17.97
19250Y	LED 19 SERIES M/C LAMP	B	$ 20.30
19250Y3	LED 19 SERIES M/C LAMP, BULK	B	$ 19.23
19251R	LED 19 SERIES M/C LAMP	B	$ 21.00
19251Y	LED 19 SERIES M/C LAMP	B	$ 25.10
19275R	LED 19 SERIES COMBO LAMP	B	$ 31.90
19275Y	LED 19 SERIES COMBO LAMP	B	$ 34.20
19350R	LED 19 SERIES M/C LAMP	B	$ 18.10
19350Y	LED 19 SERIES M/C LAMP	B	$ 22.70
19375R	LED 19 SERIES COMBO LAMP	B	$ 30.17
19375Y	LED 19 SERIES COMBO LAMP	B	$ 33.57
194	HEAVY DUTY ISO BASE RELAY	W	$ 16.03
195	HEAVY DUTY ISO BASE RELAY	W	$ 47.57
1960	LED SIGNAL STAT M/C RECTANGULAR LENS AND HSNG	B	$ 16.25
1960-3	LED SIGNAL STAT M/C RECTANGULAR LENS AND HSNG, BULK	B	$ 15.40
1960A	LED SIGNAL STAT M/C RECTANGULAR LENS AND HSNG	B	$ 16.25
1960A-3	LED SIGNAL STAT M/C RECTANGULAR LENS AND HSNG, BULK	B	$ 15.40
1961	LED SIGNAL STAT M/C W/CLEAR LENS	B	$ 16.25
1961A	LED SIGNAL STAT M/C W/CLEAR LENS	B	$ 16.25
19680A	AUXILIARY TRAFFIC CONTROL ADVISOR	W	$ 2,831.73
19720	19 SERIES BRACKET	B	$ 5.13
19721	19 SERIES BASE MOUNT AND HOT WIRE, GRAY	A	$ 6.19

19721-3	19 SERIES BASE MOUNT AND HOT WIRE, GRAY, BULK	A	$ 5.08
19722	19 SERIES 9" RADIUS BASE MOUNT, GRAY	C	$ 5.73
19723	19 SERIES LAMP GUARD, GRAY	C	$ 4.37
19724	19 SERIES LAMP GUARD, ALUMINUM	C	$ 5.53
19726	19 SERIES BASE MOUNT AND HOT WIRE, BLACK	C	$ 7.57
19728	19 SERIES BLACK MOUNT	C	$ 4.27
19729	19 SERIES BASE MOUNT, BLACK	C	$ 5.33
19737	19 SERIES GRAY MOUNT CHRYSLER #5600370415	C	$ 1.93
19738	19 SERIES 6.26" RADIUS BASE MOUNT, GRAY	C	$ 6.83
19739	19 SERIES BASE MOUNT, CHROME	C	$ 8.33
19739-3	19 SERIES BASE MOUNT, CHROME, BULK	C	$ 7.57
19740	19 SERIES MOUNT W/HOT WIRE AND .180 MALE TERMINAL	C	$ 9.17
19748	19 SERIES BRACKET, CHROME	C	$ 5.27
19750	19 SERIES 4.68" RADIUS BASE MOUNT, GRAY	D	$ 8.93
20301Y	20 SERIES BEEHIVE S/T LAMP	D	$ 23.87
20302	20 SERIES BEEHIVE DOME LAMP	D	$ 23.87
20304Y	20 SERIES BEEHIVE S/T LAMP	D	$ 24.07
20308	20 SERIES BEEHIVE UTILITY LAMP	C	$ 23.87
20309Y	20 SERIES BEEHIVE S/T LAMP	W	$ 24.07
20310Y	20 SERIES BEEHIVE LAMP W/GROUND	D	$ 25.20
20316Y	20 SERIES BEEHIVE S/T LAMP	D	$ 25.07
21001R	SUPER 21 M/C KIT, 12 VOLT	B	$ 11.30
21001R3	SUPER 21 M/C KIT, 12 VOLT, BULK	B	$ 10.23
21001Y	SUPER 21 M/C KIT, 12 VOLT	B	$ 11.30
21001Y3	SUPER 21 M/C KIT, 12 VOLT, BULK	B	$ 10.23
21002R	SUPER 21 REFLECTORIZED M/C KIT, 12 VOLT	A	$ 11.22
21002R3	SUPER 21 REFLECTORIZED M/C KIT, 12 VOLT, BULK	A	$ 10.30
21002RP	SUPER 21 REFLECTORIZED M/C KIT, 12 VOLT, PALLET	A	$ 9.25
21002Y	SUPER 21 REFLECTORIZED M/C KIT, 12 VOLT	A	$ 11.22
21002Y3	SUPER 21 REFLECTORIZED M/C KIT, 12 VOLT, BULK	A	$ 10.30
21002YP	SUPER 21 REFLECTORIZED M/C KIT, 12 VOLT, PALLET	A	$ 9.25
21004C	SUPER 21 LICENSE KIT	B	$ 24.30
21051R	LED 21 SERIES M/C KIT, 12 VOLT	A	$ 32.85
21051R3	LED 21 SERIES M/C KIT 12 VOLT, BULK	A	$ 29.57
21051Y	LED 21 SERIES M/C KIT, 12 VOLT	B	$ 37.20
21051Y3	LED 21 SERIES M/C KIT 12 VOLT, BULK	B	$ 33.50
21056R	LED 21 SERIES M/C KIT, 24 VOLT	C	$ 38.30
21056Y	LED 21 SERIES M/C KIT, 24 VOLT	C	$ 39.87
21075R	LED 21 SERIES COMBO KIT	B	$ 52.70
21075Y	LED 21 SERIES COMBO KIT	B	$ 52.70
21080R	LED 21 SERIES M/C KIT, DIAMOND SHELL	A	$ 48.15
21080Y	LED 21 SERIES M/C KIT, DIAMOND SHELL	B	$ 50.23
21090Y	LED 21 SERIES MARKER AND AUXILIARY TURN	C	$ 192.37
21093Y	LED 21 SERIES MARKER AND AUXILIARY TURN	C	$ 188.87
21094Y	LED 21 SERIES MARKER AND AUXILIARY TURN	C	$ 176.13
21095Y	LED 21 SERIES MARKER AND AUXILIARY TURN	C	$ 180.17
21096Y	LED 21 SERIES MARKER AND AUXILIARY TURN	C	$ 139.60
21200R	SUPER 21 M/C LAMP, 12 VOLT	A	$ 9.76
21200R3	SUPER 21 M/C LAMP, 12 VOLT, BULK	A	$ 8.87
21200Y	SUPER 21 M/C LAMP, 12 VOLT	A	$ 9.76
21200Y3	SUPER 21 M/C LAMP, 12 VOLT, BULK	A	$ 8.87

21201R	SUPER 21 REFLECTORIZED M/C LAMP, 12 VOLT	A	$ 9.93
21201R3	SUPER 21 REFLECTORIZED M/C LAMP, 12 VOLT, BULK	A	$ 9.04
21201Y	SUPER 21 REFLECTORIZED M/C LAMP, 12 VOLT	A	$ 9.93
21201Y3	SUPER 21 REFLECTORIZED M/C LAMP, 12 VOLT, BULK	A	$ 9.04
21204C	SUPER 21 LICENSE LAMP	B	$ 23.50
21205R	SUPER 21 M/C LAMP, 24 VOLT	C	$ 14.80
21205Y	SUPER 21 M/C LAMP, 24 VOLT	C	$ 14.80
21210Y	SUPER 21"ABS" LAMP	B	$ 10.20
21251R	LED 21 SERIES M/C LAMP, 12 VOLT	B	$ 27.27
21251R3	LED 21 SERIES M/C LAMP, 12 VOLT, BULK	B	$ 24.53
21251Y	LED 21 SERIES M/C LAMP, 12 VOLT	B	$ 30.03
21251Y3	LED 21 SERIES M/C LAMP, 12 VOLT, BULK	B	$ 27.03
21256R	LED 21 SERIES M/C LAMP, 24 VOLT	C	$ 34.10
21256Y	LED 21 SERIES M/C LAMP, 24 VOLT	C	$ 37.40
21271R	LED 21 SERIES HIGH MOUNT STOP LAMP	B	$ 118.30
21275R	LED 21 SERIES COMBO LAMP	B	$ 48.90
21275Y	LED 21 SERIES COMBO LAMP	B	$ 48.90
2150	LED SIGNAL-STAT -S/M, LAMP WITH REFLEX	A	$ 21.93
2150-3	LED SIGNAL-STAT -S/M, LAMP WITH REFLEX, BULK	A	$ 20.84
21501R	SUPER 21 EXTENSION MOUNT KIT	B	$ 15.93
21501R3	SUPER 21 EXTENSION MOUNT KIT, BULK	B	$ 15.13
21501Y	SUPER 21 EXTENSION MOUNT KIT	B	$ 15.93
21501Y3	SUPER 21 EXTENSION MOUNT KIT, BULK	B	$ 15.13
21506R	SUPER 21 W/SELF PIERCING PLUG	B	$ 12.40
2150A	LED SIGNAL-STAT -S/M, LAMP WITH REFLEX	A	$ 21.93
2150A-3	LED SIGNAL-STAT -S/M, LAMP WITH REFLEX, BULK	A	$ 20.84
2152	LED SIGNAL-STAT S/M REFLEX W/CLEAR LENS	A	$ 21.93
2152-3	LED SIGNAL-STAT S/M REFLEX W/CLEAR LENS, BULK	A	$ 20.81
2152A	LED SIGNAL-STAT S/M REFLEX W/CLEAR LENS	A	$ 21.93
2152A-3	LED SIGNAL-STAT S/M REFLEX W/CLEAR LENS, BULK	A	$ 20.81
21720	21 SERIES MOUNTING BRACKET, WHITE	C	$ 2.30
21721	21 SERIES MOUNTING BRACKET, BLACK	W	$ 2.30
21722	21 SERIES MOUNTING BRACKET, BLACK ANGLE	D	$ 10.07
217-58	MAGNET	W	$ 17.96
21880R	LED 21 SERIES M/C LAMP, DIAMOND SHELL	B	$ 46.00
21880Y	LED 21 SERIES M/C LAMP, DIAMOND SHELL	B	$ 48.17
22002R	22 SERIES SIDE TURN KIT	A	$ 20.86
22002Y	22 SERIES SIDE TURN KIT	A	$ 20.86
22002Y3	22 SERIES SIDE TURN KIT, BULK	A	$ 18.90
22004R	22 SERIES SIDE TURN KIT W/GASKET	A	$ 22.03
22004Y	22 SERIES SIDE TURN KIT W/GASKET	A	$ 22.03
22004Y3	22 SERIES SIDE TURN KIT W/GASKET, BULK	A	$ 19.90
22006R	22 SERIES SIDE TURN LAMP AND GASKET	A	$ 18.45
22006Y	22 SERIES SIDE TURN LAMP AND GASKET	A	$ 18.45
22006Y3	22 SERIES SIDE TURN LAMP AND GASKET, BULK	A	$ 16.67
22202R	22 SERIES SIDE TURN LAMP	A	$ 17.29
22202Y	22 SERIES SIDE TURN LAMP	A	$ 17.29
22202Y3	22 SERIES SIDE TURN LAMP, BULK	A	$ 15.64
242	EVER-FLASH FLASHER	D	$ 57.50
242-3	EVER-FLASH FLASHER, BULK	D	$ 46.47
243	EVER-FLASH FLASHER	D	$ 68.23

245	THERMAL FLASHER	W	$ 103.83
250	10 LAMP ELECTRONIC FLASHER	D	$ 162.37
250-3	10 LAMP ELECTRONIC FLASHER, BULK	D	$ 127.60
25062Y	25 SERIES CAB MARKER KIT	B	$ 17.87
25250R	LED 25 SERIES CAB MARKER, SURFACE MOUNT	A	$ 42.68
25250Y	LED 25 SERIES CAB MARKER, SURFACE MOUNT	A	$ 41.79
25256Y	LMP-KIT,MDL25,LED,SURF MNT,PE	B	$ 72.43
256	10 LAMP ELECTRONIC FLASHER	D	$ 185.20
25750Y	LED 25 SERIES CAB MARKER, FLUSH MOUNT	C	$ 58.27
25760Y	25 SERIES CAB MARKER LAMP	B	$ 14.10
25761Y	25 SERIES CAB MARKER LAMP	C	$ 22.80
25762Y	25 SERIES CAB MARKER LAMP	B	$ 13.70
25765Y	25 SERIES CAB MARKER LAMP, FLUSH MOUNT	D	$ 8.33
25766Y	25 SERIES CAB MARKER LAMP, SURFACE MOUNT	W	$ 9.77
25784R	25 SERIES COMBO LAMP, SURFACE MOUNT	D	$ 11.87
25784Y	25 SERIES COMBO LAMP, SURFACE MOUNT	D	$ 11.87
2584	10 LAMP ELECT. FLASHER 24 VOLT	C	$ 210.70
2584-3	10 LAMP ELECTRONIC FLASHER 24 VOLT, BULK	W	$ 147.47
26001	26 SERIES COURTESY LAMP MARINE	B	$ 8.00
26002	26 SERIES Bezel CHROME PLATED	W	$ 9.17
262	ELECTRO-MECHANICAL FLASHER 10 LAMP	B	$ 26.60
262-3	ELECTRO-MECHANICAL FLASHER 10 LAMP	B	$ 24.00
26250R	LED 26 SERIES M/C W/.180 MOLDED BULLET	C	$ 38.37
26250Y	LED 26 SERIES M/C W/.180 MOLDED BULLET	C	$ 35.93
26251R	LED 26 SERIES M/C BLUNT CUT	A	$ 33.87
26251Y	LED 26 SERIES M/C BLUNT CUT	A	$ 33.87
26270R	LED 26 SERIES LAMP KIT W/DOME RED	W	$ 39.17
26270Y	LED 26 SERIES LAMP KIT W/DOME AMBER	W	$ 39.17
263	ELECTRO-MECHANICAL FLASHER 10 LAMP	D	$ 32.30
263-3	ELECTRO-MECHANICAL FLASHER 10 LAMP, BULK	D	$ 29.17
2634	ELECTRO-MECHANICAL FLASHER 10 LAMP 24 VOLT	D	$ 48.30
26302B	DOUBLE BULLS-EYE MARKER CLEARANCE LAMP	W	$ 12.13
26302G	DOUBLE BULLS-EYE MARKER CLEARANCE LAMP	W	$ 8.60
26310R	26 SERIES M/C LAMP W/RUBBER HSNG.	B	$ 14.37
26310R3	26 SERIES M/C LAMP W/RUBBER HSNG., BULK	B	$ 12.97
26310Y	26 SERIES M/C LAMP W/RUBBER HSNG.	B	$ 14.37
26310Y3	26 SERIES M/C LAMP W/RUBBER HSNG., BULK	B	$ 12.97
26311R	26 SERIES M/C LAMP W/ALUMINUM HSNG.	B	$ 18.60
26311Y	26 SERIES M/C LAMP W/ALUMINUM HSNG.	B	$ 18.60
26312R	26 SERIES M/C LAMP W/PLASTIC HSNG.	B	$ 10.80
26312Y	26 SERIES M/C LAMP W/PLASTIC HSNG.	B	$ 10.80
26313R	26 SERIES M/C LAMP W/"ABS" HSNG.	C	$ 19.33
26313Y	26 SERIES M/C LAMP W/"ABS" HSNG.	C	$ 19.33
26315R	26 SERIES M/C LAMP W/ARMORED HSNG.	C	$ 25.77
26315R3	26 SERIES M/C LAMP W/ARMORED HSNG., BULK	C	$ 23.17
26315Y	26 SERIES M/C LAMP W/ARMORED HSNG.	C	$ 24.10
26315Y3	26 SERIES M/C LAMP W/ARMORED HSNG., BULK	C	$ 21.77
26330	26 SERIES LICENSE LAMP	A	$ 8.77
26330-3	26 SERIES LICENSE LAMP, BULK	A	$ 7.77
26331	26 SERIES LICENSE/COURTESY LAMP	B	$ 7.77
26331-3	26 SERIES LICENSE/COURTESY LAMP, BULK	B	$ 7.10

26335	26 SERIES BULB REPLACEABLE LICENSE LAMP, GRAY	B	$ 11.53
26335-3	26 SERIES BULB REPLACEABLE LICENSE LAMP, GRAY, BULK	B	$ 10.47
26336	26 SERIES BULB REPLACEABLE LICENSE LAMP	B	$ 13.13
26353R	26 SERIES SCHOOL BUS MARKER LAMP, 12 VOLT	C	$ 20.67
26353Y	26 SERIES SCHOOL BUS MARKER LAMP, 12 VOLT	C	$ 20.97
26354R	26 SERIES SCHOOL BUS MARKER/CAB MARKER LAMP, 12 VOLT	C	$ 20.67
26354Y	26 SERIES SCHOOL BUS MARKER/CAB MARKER LAMP, 12 VOLT	C	$ 21.47
26371	26 SERIES BULB REPLACEABLE LICENSE LAMP, CHROME	W	$ 13.33
26380	26 SERIES COVER, GRAY	D	$ 10.30
26390Y	26 SERIES SURFACE MOUNT MARKER/SIGNAL BULB REPLACEABLE LAMP	D	$ 60.77
26392C	STEPWELL LAMP BULB REPLACEABLE	D	$ 51.77
26393C	STEPWELL LAMP BULB REPLACEABLE	D	$ 50.80
26394C	STEPWELL LAMP BULB REPLACEABLE	D	$ 53.47
264	4 LAMP FLASHER	W	$ 36.10
266	6 LAMP FLASHER	W	$ 35.40
2660	LED SIGNAL STAT M/C RECTANGULAR LENS AND HSNG	B	$ 18.84
2660-3	LED SIGNAL STAT M/C RECTANGULAR LENS AND HSNG	B	$ 17.88
2660A	LED SIGNAL STAT M/C RECTANGULAR LENS AND HSNG	B	$ 18.84
2660A-3	LED SIGNAL STAT M/C RECTANGULAR LENS AND HSNG	B	$ 17.88
2661	LED SIGNAL-STAT M/C W/CLEAR LENS	B	$ 18.84
2661-3	LED SIGNAL-STAT M/C W/CLEAR LENS, BULK	B	$ 17.88
2661A	LED SIGNAL-STAT M/C W/CLEAR LENS	B	$ 18.84
2661A-3	LED SIGNAL-STAT M/C W/CLEAR LENS, BULK	B	$ 17.88
2670	OBSOLETE		
2671	LED SIGNAL-STAT NARROW RAIL DEFLECTOR MOUNT	B	$ 28.50
2671-3	LED SIGNAL-STAT NARROW RAIL DEFLECTOR MOUNT, BULK	B	$ 27.13
2671A	LED SIGNAL-STAT NARROW RAIL DEFLECTOR MOUNT	B	$ 28.50
2671A-3	LED SIGNAL-STAT NARROW RAIL DEFLECTOR MOUNT, BULK	B	$ 27.13
2672	LED CLEARANCE SIDE MARKER KIT SEALED W/REFLEX 2 DIODE PATTERN	B	$ 15.90
2672A	LED CLEARANCE SIDE MARKER KIT SEALED W/REFLEX 2 DIODE PATTERN	B	$ 15.90
2672A-3	LED CLEARANCE SIDE MARKER KIT SEALED W/REFLEX 2 DIODE PATTERN, BULK	B	$ 15.13
26723	26 SERIES LAMP GUARD	B	$ 8.70
2673	LED CLEARANCE SIDE MARKER KIT SEALED 12 DIODE PATTERN	B	$ 23.20
2673-3	LED CLEARANCE SIDE MARKER KIT SEALED 12 DIODE PATTERN, BULK	B	$ 22.07
2673A	LED CLEARANCE SIDE MARKER KIT SEALED 12 DIODE PATTERN	B	$ 23.20
2673A-3	LED CLEARANCE SIDE MARKER KIT SEALED 12 DIODE PATTERN, BULK	B	$ 22.07
2674	LED CLEARANCE MARKER PC RATED SEALED 14 DIODE PATTERN	B	$ 26.63
26740R	26 SERIES STEEL 20" ID BAR KIT	D	$ 53.13
26741R	26 SERIES STEEL 15" ID BAR KIT	B	$ 48.33
2674A	LED CLEARANCE MARKER PC RATED SEALED 14 DIODE PATTERN	B	$ 26.63
2675	SIGNAL-STAT LED CHROME PLATED LAMP	B	$ 19.47
2675A	SIGNAL-STAT LED CHROME PLATED LAMP	B	$ 19.47
26760Y	26 SERIES CHROME CAB MARKER KIT	B	$ 79.77
26760Y3	26 SERIES CHROME CAB MARKER KIT, BULK	B	$ 72.17
26762Y	26 SERIES CAB MARKER LAMP	B	$ 10.47
26765R	26 SERIES CONTOURED CAB MARKER, 12 VOLT	W	$ 16.70
26765R3	26 SERIES CONTOURED CAB MARKER, 12 VOLT, BULK	W	$ 15.10
26765Y	26 SERIES CONTOURED CAB MARKER, 12 VOLT	A	$ 14.83
26765Y3	26 SERIES CONTOURED CAB MARKER, 12 VOLT, BULK	A	$ 14.10
26771R	26 SERIES CAB MARKER W/RUBBER HSNG.	D	$ 18.53
26771R3	26 SERIES CAB MARKER W/RUBBER HSNG., BULK	D	$ 16.83

26771Y	26 SERIES CAB MARKER W/RUBBER HSNG.	B	$ 17.40
26771Y3	26 SERIES CAB MARKER W/RUBBER HSNG., BULK	B	$ 15.80
26901R	26 SERIES COMBO, BULB REPLACEABLE	C	$ 8.17
26901Y	26 SERIES COMBO, BULB REPLACEABLE	C	$ 8.17
26902R	26 SERIES COMBO, BULB REPLACEABLE	C	$ 9.57
26902Y	26 SERIES COMBO, BULB REPLACEABLE	C	$ 9.57
270	SIGNAL-STAT SOLID STATE HEAVY DUTY FLASHER	W	$ 201.10
270-3	SIGNAL-STAT SOLID STATE HEAVY DUTY FLASHER, BULK	W	$ 181.37
27003	COMPLEX 7" HEADLAMP, MECHANICAL AIM KIT	D	$ 166.43
27004	COMPLEX 7" HEADLAMP, MECHANICAL AIM	C	$ 143.73
27009	5"X7" HEADLAMP MULTI SURFACE REFLECTOR DESIGN	C	$ 108.87
27009-1	5"X7" HEADLAMP MULTI SURFACE REFLECTOR DESIGN, DISPLAY PACK	C	$ 110.37
2701	SINGLE FACE DIE CAST PEDESTAL BULB REPLACEABLE LAMP W/BLACK HSNG.	D	$ 48.73
2701A	SINGLE FACE DIE CAST PEDESTAL BULB REPLACEABLE LAMP W/BLACK HSNG.	D	$ 48.73
27010	4"X6" HEADLAMP	C	$ 141.43
27011	4"X6"HEADLAMP KIT W/ ADAPTER	C	$ 147.63
27012	7" ROUND UNIVERSAL HEADLAMP	C	$ 94.47
27012-1	7" ROUND UNIVERSAL HEADLAMP, DISPLAY PACK	C	$ 95.83
2702	SINGLE FACE DIE CAST PEDESTAL BULB REPLACEABLE LAMP W/BLACK HSNG.	D	$ 50.07
2702A	SINGLE FACE DIE CAST PEDESTAL BULB REPLACEABLE LAMP W/BLACK HSNG.	D	$ 53.53
270Y1014	SIGNAL-STAT SOLID STATE HEAVY DUTY FLASHER 24 VOLT	W	$ 219.77
27270C	LED 7" HIGH/LOW HEADLAMP PH7	C	$ 645.67
27270C3	LED 7" HIGH/LOW HEADLAMP PH7, BULK	C	$ 613.33
27275C	LED 7" HEATED HEADLAMP PH7	B	$ 863.33
27275C3	LED 7" HEATED HEADLAMP PH7, BULK	B	$ 820.17
27290C	LED 7" HEADLAMP HI/LOW ECE RHT	C	$ 765.87
27290C3	LED 7" HEADLAMP HI/LOW ECE RHT, BULK	C	$ 727.57
27291C	LED 7" HIGH/LOW HEADLAMP ECE LH	C	$ 765.87
27291C3	LED 7" HIGH/LOW HEADLAMP ECE LH, BULK	C	$ 727.57
27450C	LED 5X7 HI/LOW BEAM HEADLAMP	W	$ 645.67
27450C3	LED 5X7 HI/LOW BEAM HEADLAMP,BULK	W	$ 613.33
27490C	LED 5X7 ECE HEADLAMP RH LAMP	C	$ 872.67
27490C3	LED 5X7 ECE HEADLAMP RH LAMP, BULK	C	$ 829.03
27491C	LED 5X7 ECE HEADLAMP LHT LAMP	C	$ 872.67
27491C3	LED 5X7 ECE HEADLAMP LHT LAMP, BULK	C	$ 829.03
275	SIGNAL-STAT SOLID STATE HEAVY DUTY FLASHER	W	$ 189.77
2750	SIGNAL-STAT LED DF PED LAMP- RED/AMBER	C	$ 117.93
2750-3	SIGNAL-STAT LED DF PED LAMP - RED/AMBER, BULK	C	$ 112.23
2751	SIGNAL-STAT LED SF PED LAMP	C	$ 70.73
2751-3	SIGNAL-STAT LED SF PED LAM, BULK	C	$ 67.30
2751A	SIGNAL-STAT LED SF PED LAMP AMBER	C	$ 70.73
2751A-3	SIGNAL-STAT LED SF PED LAMP AMBER, BULK	C	$ 67.30
2752	SIGNAL- STAT LED SQUARE PED AMBER/AMBER	C	$ 136.00
2753	SIGNAL- STAT LED SQUARE PED,LH RED/AMBER	C	$ 125.60
2756	SIGNAL- STAT LED SQUARE PED,RH RED/AMBER	C	$ 125.60
2758	SIGNAL-STAT LED SQUARE PED, RH 2 STUD	C	$ 139.33
2758-3	SIGNAL-STAT LED SQUARE PED, RH 2 STUD, BULK	C	$ 132.53
2759	SIGNAL-STAT LED SQUARE PED, LH 2 STUD	C	$ 139.33
2759-3	SIGNAL-STAT LED SQUARE PED, LH 2 STUD, BULK	C	$ 132.53
276	SIGNAL-STAT SOLID STATE ALTERNATING HEAVY DUTY FLASHER	W	$ 189.77
27640C	LED 4x6 HEADLAMP LOW	C	$ 436.17

27640C3	LED 4x6 HEADLAMP LOW, BULK	C	$ 414.17
27645C	LED 4x6 HEADLAMP HIGH	C	$ 436.17
27645C3	LED 4x6 HEADLAMP HIGH, BULK	C	$ 414.17
2801	DOUBLE FACE, DIE CAST, PEDESTAL ONE WIRE LAMP MACK#47M0251P1	D	$ 52.33
2803	DOUBLE FACE, DIE CAST, PEDESTAL TWO WIRE LAMP MACK#47M0251P1	D	$ 54.37
282	SIGNAL-STAT ALTERNATING 10 LAMP FLASHER	B	$ 50.67
283	SIGNAL-STAT ALTERNATING 10 LAMP FLASHER	B	$ 56.97
285	SIGNAL-STAT LED CIRCUIT FLASHER	W	$ 114.97
286	SIGNAL-STAT ALTERNATING 10 LAMP FLASHER	W	$ 61.60
29002R	MALE PIN 21 RECTANGULAR, KIT	A	$ 14.23
29002Y	MALE PIN 21 RECTANGULAR, KIT	A	$ 14.23
29003R	MALE PIN 21 RECTANGULAR W/REFLEX, KIT	A	$ 13.88
29003Y	MALE PIN 21 RECTANGULAR W/REFLEX, KIT	A	$ 13.88
29202R	MALE PIN 21 SIDE MARKER RECTANGULAR	A	$ 9.97
29202R3	MALE PIN 21 SIDE MARKER RECTANGULAR, BULK	A	$ 8.93
29202Y	MALE PIN 21 SIDE MARKER RECTANGULAR	A	$ 9.97
29202Y3	MALE PIN 21 SIDE MARKER RECTANGULAR, BULK	A	$ 8.93
29203R	MALE PIN 21 SIDE MARKER RECTANGULAR W/REFLEX	A	$ 9.59
29203R3	MALE PIN 21 SIDE MARKER RECTANGULAR W/REFLEX, BULK	A	$ 8.63
29203Y	MALE PIN 21 SIDE MARKER RECTANGULAR W/REFLEX	A	$ 9.59
29203Y3	MALE PIN 21 SIDE MARKER RECTANGULAR W/REFLEX, BULK	A	$ 8.63
29204C	MALE PIN 21 RECTANGULAR LICENSE LAMP, BULK	A	$ 13.85
29204C3	MALE PIN 21 RECTANGULAR LICENSE LAMP, BULK	A	$ 12.47
30001R	30 SERIES M/C LAMP	B	$ 9.73
30001Y	30 SERIES M/C LAMP	B	$ 9.73
30050R	LED 30 SERIES M/C OMNI VOLT KIT	A	$ 29.11
30050R3	LED 30 SERIES M/C OMNI VOLT KIT, BULK	A	$ 27.07
30050Y	LED 30 SERIES M/C OMNI VOLT KIT	B	$ 30.47
30050Y3	LED 30 SERIES M/C OMNI VOLT KIT, BULK	B	$ 28.40
30051R	LED 30 SERIES M/C OMNI VOLT KIT, GRAY FLANGE	C	$ 31.33
30051Y	LED 30 SERIES M/C OMNI VOLT KIT, GRAY FLANGE	C	$ 32.83
30055R	LED 30 SERIES MULTI 10-30 VOLT KIT	C	$ 35.37
30055Y	LED 30 SERIES MULTI 10-30 VOLT KIT	C	$ 35.37
30060R	LED EUROPEAN FLASHER LAMP KIT 10-30 VOLT, RED	W	$ 62.34
30060Y	LED EUROPEAN FLASHER LAMP KIT 10-30 VOLT, AMBER	W	$ 60.90
30061R	LED EUROPEAN SURFACE LAMP KIT 10 VOLT, RED	W	$ 56.94
30061Y	LED EUROPEAN SURFACE LAMP KIT 10 VOLT, AMBER	W	$ 55.05
30062R	LED EUROPEAN SURFACE LAMP 10 VOLT,RED	W	$ 42.59
30062Y	LED EUROPEAN SURFACE LAMP 10 VOLT, AMBER	W	$ 41.05
30065Y	LED EUROPEAN FLASHER LAMP KIT 10-30 VOLT, AMBER	W	$ 41.05
30066R	LED EUROPEAN FLASHER LAMP KIT 10-30 VOLT, RED	W	$ 56.60
30066Y	LED EUROPEAN FLASHER LAMP KIT 10-30 VOLT, AMBER	W	$ 55.05
30070R	LED 30 SERIES LOW PROFILE M/C LAMP KIT	A	$ 29.11
30070Y	LED 30 SERIES LOW PROFILE M/C LAMP KIT	A	$ 30.47
30071R	LED 30 SERIES LOW PROFILE M/C FLANGE KIT	C	$ 31.33
30071Y	LED 30 SERIES LOW PROFILE M/C FLANGE KIT	C	$ 32.83
30075R	LED 30 SERIES HIGH PROFILE COMBO LAMP KIT	B	$ 59.47
30075Y	LED 30 SERIES HIGH PROFILE COMBO LAMP KIT	B	$ 59.47
30080R	LED 30 SERIES HIGH PROFILE COMBO FLANGE KIT	B	$ 59.77
30080Y	LED 30 SERIES HIGH PROFILE COMBO FLANGE KIT	B	$ 59.77
30085R	LED 30 SERIES HIGH PROFILE COMBO FLANGE KIT	B	$ 50.17

30085Y	LED 30 SERIES HIGH PROFILE COMBO FLANGE KIT	B	$ 50.17
30086R	LED 30 SERIES LOW PROFILE COMBO LAMP KIT	B	$ 46.53
30086Y	LED 30 SERIES LOW PROFILE COMBO LAMP KIT	B	$ 46.53
30090Y	LED 30 SERIES HIGH PROFILE COMBO FLANGE KIT	B	$ 49.20
30091R	LED 30 SERIES LOW PROFILE COMBO FLANGE KIT	B	$ 45.53
30091Y	LED 30 SERIES LOW PROFILE COMBO FLANGE KIT	B	$ 45.53
300A	LED LOW PROFILE STROBE PERMANENT MOUNT	W	$ 197.03
30133	SERIES 33 FLANGE GRY PC MOUNT	C	$ 4.50
30136	SERIES 36 FLANGE GRY MOUNT	C	$ 4.33
301A	LED LOW PROFILE STROBE MAGNETIC MOUNT	W	$ 288.03
30200B	30 SERIES M/C LAMP	C	$ 7.50
30200B3	30 SERIES M/C LAMP, BULK	C	$ 6.80
30200C	30 SERIES M/C LAMP	B	$ 6.33
30200C3	30 SERIES M/C LAMP, BULK	B	$ 5.77
30200G	30 SERIES M/C LAMP	C	$ 7.50
30200G3	30 SERIES M/C LAMP, BULK	C	$ 6.80
30200R	30 SERIES M/C LAMP	A	$ 5.20
30200R3	30 SERIES M/C LAMP, BULK	A	$ 3.81
30200RP	30 SERIES M/C LAMP, PALLET	A	$ 3.60
30200Y	30 SERIES M/C LAMP	A	$ 5.20
30200Y3	30 SERIES M/C LAMP, BULK	A	$ 3.81
30200YP	30 SERIES M/C LAMP, PALLET	A	$ 3.60
30201R	30 SERIES M/C BEEHIVE LAMP	B	$ 6.10
30201R3	30 SERIES M/C BEEHIVE LAMP, BULK	B	$ 5.60
30201Y	30 SERIES M/C BEEHIVE LAMP	B	$ 6.10
30201Y3	30 SERIES M/C BEEHIVE LAMP, BULK	B	$ 5.60
30203Y	OBSOLETE		
30204R	30 SERIES M/C COMBO LAMP	A	$ 8.08
30204Y	30 SERIES M/C COMBO LAMP	A	$ 8.08
30206C	30 SERIES M/C LAMP, 24 VOLT	C	$ 7.40
30206R	30 SERIES M/C LAMP, 24 VOLT	C	$ 7.60
30206Y	30 SERIES M/C LAMP, 24 VOLT	C	$ 7.60
30221R	30 SERIES M/C FLUSH MOUNT LAMP	B	$ 9.90
30221R3	30 SERIES M/C FLUSH MOUNT LAMP, BULK	B	$ 8.93
30221RP	30 SERIES M/C FLUSH MOUNT LAMP, PALLET	B	$ 8.03
30221Y	30 SERIES M/C FLUSH MOUNT LAMP	B	$ 9.90
30221Y3	30 SERIES M/C FLUSH MOUNT LAMP, BULK	B	$ 8.93
30221YP	30 SERIES M/C FLUSH MOUNT LAMP, PALLET	B	$ 8.03
30222R	30 SERIES M/C SURFACE MOUNT LAMP	B	$ 9.70
30222R3	30 SERIES M/C SURFACE MOUNT LAMP, BULK	B	$ 8.80
30222Y	30 SERIES M/C SURFACE MOUNT LAMP	B	$ 9.70
30222Y3	30 SERIES M/C SURFACE MOUNT LAMP, BULK	B	$ 8.80
30223R	30 SERIES M/C COMBO FLUSH MOUNT LAMP	B	$ 9.87
30223Y	30 SERIES M/C COMBO FLUSH MOUNT LAMP	B	$ 9.87
30230Y	30 SERIES "ABS" HORIZONTAL MOUNT	C	$ 6.83
30250R	LED 30 SERIES OMNI VOLT M/C LAMP	A	$ 17.31
30250R3	LED 30 SERIES OMNI VOLT M/C LAMP, BULK	A	$ 16.39
30250Y	LED 30 SERIES OMNI VOLT M/C LAMP	B	$ 18.53
30250Y3	LED 30 SERIES OMNI VOLT M/C LAMP, BULK	B	$ 17.58
30251R	LED 30 SERIES OMNI VOLT M/C LAMP, GRAY FLANGE	C	$ 23.63
30251R3	LED 30 SERIES OMNI VOLT M/C LAMP, GRAY FLANGE, BULK	C	$ 22.43

30251Y	LED 30 SERIES OMNI VOLT M/C LAMP, GRAY FLANGE	C	$ 25.10
30251Y3	LED 30 SERIES OMNI VOLT M/C LAMP, GRAY FLANGE, BULK	C	$ 23.87
30255R	LED 30 SERIES OMNI 10- 30 VOLT M/C LAMP	B	$ 28.97
30255Y	LED 30 SERIES OMNI 10- 30 VOLT M/C LAMP	B	$ 28.97
30257Y	30 SERIES "ABS" VERTICAL MOUNT	B	$ 6.03
30257Y3	30 SERIES "ABS" VERTICAL MOUNT, BULK	B	$ 5.57
30262R	LED 30 SERIES EUROPEAN SURFACE LAMP KIT	W	$ 36.26
30262Y	LED 30 SERIES EUROPEAN SURFACE LAMP KIT	W	$ 34.68
30264Y	LED 30 SERIES "ABS" LAMP	B	$ 57.30
30265R	LED 30 SERIES EUROPEAN FLUSH MOUNT. LAMP, RED	W	$ 36.23
30265Y	LED 30 SERIES EUROPEAN FLUSH MOUNT. LAMP, AMBER	W	$ 34.68
30269Y	LED 30 SERIES "ABS" LAMP AND GRAY FLANGE	B	$ 59.40
30270R	LED 30 SERIES LOW PROFILE LAMP	A	$ 19.21
30270Y	LED 30 SERIES LOW PROFILE LAMP	A	$ 20.57
30271Y	LED 30 SERIES "ABS" LAMP	D	$ 36.27
30272R	LED 30 SERIES LOW PROFILE LAMP AND GRAY FLANGE	C	$ 23.63
30272Y	LED 30 SERIES LOW PROFILE LAMP AND GRAY FLANGE	C	$ 25.10
30273R	LED 30 SERIES EUROPEAN LAMP W/GROMMET 10-30V	W	$ 32.68
30273Y	LED 30 SERIES EUROPEAN LAMP W/GROMMET 10-30V	W	$ 31.14
30275R	LED 30 SERIES HIGH PROFILE LAMP	B	$ 51.33
30275R3	LED 30 SERIES HIGH PROFILE LAMP, BULK	B	$ 48.77
30275Y	LED 30 SERIES HIGH PROFILE LAMP	B	$ 51.33
30275Y3	LED 30 SERIES HIGH PROFILE LAMP, BULK	B	$ 48.77
30276R	LED 30 SERIES BEEHIVE LAMP	B	$ 14.17
30276Y	LED 30 SERIES BEEHIVE LAMP	B	$ 20.57
30279R	LED 30 SERIES HIGH PROFILE LAMP AND GRAY FLANGE	B	$ 54.67
30279Y	LED 30 SERIES HIGH PROFILE LAMP AND GRAY FLANGE	B	$ 54.67
30285R	LED 30 SERIES LOW PROFILE LAMP	B	$ 44.37
30285R3	LED 30 SERIES LOW PROFILE LAMP, BULK	B	$ 42.10
30285Y	LED 30 SERIES LOW PROFILE LAMP	B	$ 44.37
30285Y3	LED 30 SERIES LOW PROFILE LAMP, BULK	B	$ 42.10
30286R	LED 30 SERIES SELF FLASHING 2 DIODE PATTERN	C	$ 67.37
30286Y	LED 30 SERIES SELF FLASHING 2 DIODE PATTERN	C	$ 64.47
30288R	LED 30 SERIES LOW PROFILE LAMP AND BLACK FLANGE	B	$ 48.13
30288Y	LED 30 SERIES LOW PROFILE LAMP AND BLACK FLANGE	B	$ 48.13
30289R	LED 30 SERIES LOW PROFILE LAMP AND BLACK FLANGE	B	$ 48.13
30289Y	LED 30 SERIES LOW PROFILE LAMP AND BLACK FLANGE	B	$ 48.13
30375R	LED 30 SERIES LOW PROFILE LAMP	B	$ 39.93
30375Y	LED 30 SERIES LOW PROFILE LAMP	B	$ 39.93
30379R	LED 30 SERIES HIGH PROFILE LAMP	B	$ 41.97
30379Y	LED 30 SERIES HIGH PROFILE LAMP	B	$ 41.97
30385R	LED 30 SERIES LOW PROFILE LAMP	B	$ 36.27
30385Y	LED 30 SERIES LOW PROFILE LAMP	B	$ 36.27
30386R	LED 30 SERIES LOW PROFILE LAMP AND GRAY FLANGE	B	$ 38.30
30386Y	LED 30 SERIES LOW PROFILE LAMP AND GRAY FLANGE	B	$ 38.30
30400	30 SERIES MOUNT KIT	C	$ 5.00
30401	30 SERIES OPEN BACK GROMMET KIT	A	$ 6.53
30401-3	30 SERIES OPEN BACK GROMMET KIT, BULK	A	$ 5.12
30402	30 SERIES CLOSED BACK GROMMET KIT	C	$ 7.40
30403	30 SERIES CAM-ON MOUNT KIT	C	$ 10.07
30404	30 SERIES DEFLECTOR MOUNT KIT	B	$ 11.43

30405	30 SERIES DEFLECTOR MOUNT KIT	A	$ 10.69
30410	30 SERIES DEFLECTOR MOUNT KIT	C	$ 18.27
3050	LED SIGNAL STAT M/C LAMP	B	$ 15.40
3050-3	LED SIGNAL STAT M/C LAMP, BULK	B	$ 14.59
3050A	LED SIGNAL STAT M/C LAMP	B	$ 15.40
3050A-3	LED SIGNAL STAT M/C LAMP BULK	B	$ 14.59
30503R	30 SERIES GROMMET MOUNT LAMP KIT	B	$ 11.67
30503Y	30 SERIES GROMMET MOUNT LAMP KIT	B	$ 11.67
30504R	30 SERIES GROMMET MOUNT LAMP KIT W/BRACKET	B	$ 15.53
30504Y	30 SERIES GROMMET MOUNT LAMP KIT W/BRACKET	B	$ 15.53
3051	LED SIGNAL STAT M/C LAMP	B	$ 15.40
3051-3	LED SIGNAL STAT M/C LAMP, BULK	B	$ 14.59
3051A	LED SIGNAL STAT M/C LAMP	B	$ 15.40
3051A-3	LED SIGNAL STAT M/C LAMP, BULK	B	$ 14.59
3053	LED SIGNAL STAT M/C 2" LAMP W/ INT FLANGE, RED	B	$ 16.27
3053-3	LED SIGNAL STAT M/C 2" LAMP W/ INT FLANGE, RED,BULK	B	$ 15.47
3053A	LED SIGNAL STAT M/C 2" LAMP W/ INT FLANGE, AMBER	B	$ 16.27
3053A-3	LED SIGNAL STAT M/C 2" LAMP W/ INT FLANGE, AMBER, BULK	B	$ 15.47
3058	LED SIGNAL STAT M/C 2" 1 DIODE LAMP, RED	B	$ 12.67
3058-3	LED SIGNAL STAT M/C 2" 1 DIODE LAMP, RED, BULK	B	$ 11.40
3058A	LED SIGNAL STAT M/C 2" 1 DIODE LAMP, AMBER	B	$ 12.67
3058A-3	LED SIGNAL STAT M/C 2" 1 DIODE LAMP, AMBER, BULK	B	$ 11.40
3070	LED SIGNAL STAT M/C LAMP W/GRAY FLANGE	W	$ 15.40
30700	30 SERIES OPEN BACK GROMMET	A	$ 3.32
30700-3	30 SERIES OPEN BACK GROMMET, BULK	A	$ 2.10
30701	30 SERIES GROMMET	B	$ 3.47
30702	30 SERIES MOUNT	D	$ 3.93
30704	30 SERIES Close BACK GROMMET W/.50 DIA. EXIT HOLE	D	$ 3.93
30708	30 SERIES POLISHED SS FLANGE COVER, DISPLAY	D	$ 5.60
3070A	LED SIGNAL STAT M/C LAMP W/GRAY FLANGE	W	$ 17.40
30712	30 SERIES CHROME PLATED PLASTIC GROMMET COVER W/VISOR	C	$ 8.00
30713	30 SERIES CURVED BRACKET	C	$ 7.60
30720	30 SERIES MOUNT	C	$ 1.47
30721	30 SERIES DEFLECTOR MOUNT, GRAY	B	$ 4.77
30722	30 SERIES DEFLECTOR MOUNT, GRAY	B	$ 4.47
30727	30 SERIES ADAPTER MOUNT	D	$ 5.07
30728	30 SERIES MOUNTING BRACKET	C	$ 9.93
30729	30 SERIES DEFLECTOR MOUNT, BLACK	C	$ 5.00
30729-3	30 SERIES DEFLECTOR MOUNT, BLACK, BULK	C	$ 4.77
30730	30 SERIES DEFLECTOR INNER MOUNT	C	$ 13.57
30731	30 SERIES DEFLECTOR OUTER MOUNT	C	$ 4.83
30740R	30 SERIES ID BAR KIT 6" CENTERS	C	$ 49.93
30742R	30 SERIES ID BAR KIT 9" CENTERS	D	$ 51.83
3075	LED SIGNAL-STAT 30 SERIES BEEHIVE	B	$ 15.71
3075-3	LED SIGNAL-STAT 30 SERIES BEEHIVE, BULK	B	$ 14.93
3075A	LED SIGNAL-STAT 30 SERIES BEEHIVE	B	$ 15.71
3075A-3	LED SIGNAL-STAT 30 SERIES BEEHIVE, BULK	B	$ 14.93
3076	LED SIGNAL-STAT 30 SERIES BEEHIVE W/CLEAR LENS	B	$ 15.74
3076-3	LED SIGNAL-STAT 30 SERIES BEEHIVE W/CLEAR LENS, BULK	B	$ 14.96
3076A	LED SIGNAL-STAT 30 SERIES BEEHIVE W/CLEAR LENS	B	$ 15.74
3076A-3	LED SIGNAL-STAT 30 SERIES BEEHIVE W/CLEAR LENS, BULK	B	$ 14.96

307A	" THE GUARDIAN" LOW PROFILE STROBE	C	$ 168.20
3121	7- POSITION JUNCTION BOX	D	$ 82.20
313A	" THE GUARDIAN" LOW PROFILE STROBE	D	$ 275.17
31ADB	RECTANGULAR REFLECTOR, COUNTER DISPLAY	B	$ 2.73
31DB	RECTANGULAR REFLECTOR, COUNTER DISPLAY	B	$ 2.73
32	RECTANGULAR REFLECTOR	C	$ 5.87
32A	RECTANGULAR REFLECTOR	C	$ 5.87
32ADB	RECTANGULAR REFLECTOR, COUNTER DISPLAY	C	$ 6.33
32DB	RECTANGULAR REFLECTOR, COUNTER DISPLAY	C	$ 6.33
328D	B/U SAFETY BULB AND ALARM	A	$ 64.93
329D	B/U SAFETY BULB AND ALARM	A	$ 64.93
33010C	LED 33 SERIES LICENSE LAMP & GROMMET KIT, CLEAR	D	$ 57.50
33050R	LED 33 SERIES M/C LAMP	A	$ 27.93
33050R3	LED 33 SERIES M/C LAMP BULK	A	$ 23.73
33050Y	LED 33 SERIES MARKER/CLEARANCE LAMP GROMMET MOUNT KIT	A	$ 36.10
33050Y3	LED 33 SERIES MARKER/CLEARANCE LAMP GROMMET MOUNT KIT	A	$ 30.70
33051R	LED 33 SERIES AUX. FLANGE MOUNT KIT	A	$ 30.16
33051Y	LED 33 SERIES M/C LAMP FLANGE MT KIT	A	$ 38.90
33060B	LED 33 SERIES AUX. GROMMET MOUNT KIT, BLUE	D	$ 50.07
33060C	LED 33 SERIES AUX. GROMMET MOUNT KIT, CLEAR	D	$ 50.07
33060G	LED 33 SERIES AUX. GROMMET MOUNT KIT, GREEN	D	$ 50.07
33060PR	LED 33 SERIES AUX. GROMMET MOUNT KIT, PURPLE	D	$ 50.07
33060R	LED 33 SERIES AUX. GROMMET MOUNT KIT, RED	D	$ 50.07
33060Y	LED 33 SERIES AUX. GROMMET MOUNT KIT, YELLOW	D	$ 50.07
33061G	LED 33 SERIES AUX. FLANGE MOUNT KIT, GREEN	D	$ 52.33
33061PR	LED 33 SERIES AUX. FLANGE MOUNT KIT, PURPLE	D	$ 52.33
33061R	LED 33 SERIES AUX. FLANGE MOUNT KIT, RED	D	$ 52.33
33062B	LED 33 SERIES AUX. FLANGE MOUNT KIT, BLUE	D	$ 52.53
33062C	LED 33 SERIES AUX. FLANGE MOUNT KIT, CLEAR	D	$ 52.53
33062G	LED 33 SERIES AUX. FLANGE MOUNT KIT, GREEN	D	$ 52.53
33062PR	LED 33 SERIES AUX. FLANGE MOUNT KIT, PURPLE	D	$ 52.53
33062R	LED 33 SERIES AUX. FLANGE MOUNT KIT, RED	D	$ 52.53
33062Y	LED 33 SERIES AUX. FLANGE MOUNT KIT, YELLOW	D	$ 52.53
33065B	LED 33 SERIES AUX. GROMMET MOUNT KIT, BLUE	D	$ 26.90
33065C	LED 33 SERIES AUX. GROMMET MOUNT KIT, CLEAR	D	$ 26.90
33065G	LED 33 SERIES AUX. GROMMET MOUNT KIT, GREEN	D	$ 26.90
33065PR	LED 33 SERIES AUX. GROMMET MOUNT KIT, PURPLE	D	$ 26.90
33065R	LED 33 SERIES AUX. GROMMET MOUNT KIT, RED	D	$ 26.90
33065Y	LED 33 SERIES AUX. GROMMET MOUNT KIT,YELLOW	D	$ 26.90
33066C	LED 33 SERIES AUX. FLANGE MOUNT KIT, CLEAR	D	$ 29.20
33066G	LED 33 SERIES AUX. FLANGE MOUNT KIT, GREEN	D	$ 29.20
33066PR	LED 33 SERIES AUX. FLANGE MOUNT KIT, PURPLE	D	$ 29.20
33066R	LED 33 SERIES AUX. FLANGE MOUNT KIT, RED	D	$ 29.20
33066Y	LED 33 SERIES AUX. FLANGE MOUNT KIT, YELLOW	D	$ 29.20
33067C	LED 33 SERIES AUX. CHROME FLANGE MOUNT KIT, CLEAR	D	$ 29.40
33067G	LED 33 SERIES AUX. CHROME FLANGE MOUNT KIT, GREEN	D	$ 29.40
33067R	LED 33 SERIES AUX. CHROME FLANGE MOUNT KIT, RED	D	$ 29.40
33067Y	LED 33 SERIES AUX. CHROME FLANGE MOUNT KIT, YELLOW	D	$ 29.40
33070R	LED LAMP KIT-33251R W/ 33700 GRMT	A	$ 31.25
33071R	LED LAMP KIT-33251R W/ 33720 GRMT	A	$ 31.25
33072R	LED LAMP KIT-33251R W/ 33725 GRMT	A	$ 31.25

33075R	LED 33 SERIES M/C COMBO GROMMET MOUNT. KIT	A	$ 37.57
33075Y	LED 33 SERIES M/C COMBO GROMMET MOUNT. KIT	A	$ 37.57
33080R	LED 33 SERIES M/C COMBO FLANGE MOUNT. KIT	A	$ 39.83
33080Y	LED 33 SERIES M/C COMBO FLANGE MOUNT. KIT	A	$ 39.83
33095G	8" LOW AUX. W/GROMMET LAMP KIT	C	$ 25.91
33203R	LED 3 WIRE LAMP P2 12V 33700	W	$ 54.60
33203Y	LED 3 WIRE LAMP, P2, AMB, 12 V	W	$ 54.60
33204R	LED 3 WIRE LAMP P2 12V 33725	W	$ 54.60
33204Y	LED 3 WIRE LAMP P2, AMB, 12V 33725	W	$ 54.60
33205R	LED 3 WIRE LAMP P2 12V 33720	W	$ 54.60
33205Y	LED 3 WIRE LAMP P2, AMB, 12V 33720	W	$ 54.60
33206R	LED 3 WIRE LAMP P2 12V 33702	W	$ 55.37
33206Y	LED 3 WIRE LAMP P2, AMB, 12V 33702	W	$ 55.37
33207R	LED 3 WIRE LAMP P2 12V 33800	W	$ 57.07
33207Y	LED 3 WIRE LAMP P2, AMB, 12V 33800	W	$ 57.07
33208R	LED 3 WIRE LAMP P2 12V 33810	W	$ 57.97
33208Y	LED 3 WIRE LAMP P2, AMB, 12V 33810	W	$ 57.97
33209Y	LED 3 WIRE LAMP P2 ,AMB 15.5"	W	$ 52.00
33210C	LED 33 SERIES LICENSE LAMP, CLEAR	D	$ 55.93
33250R	LED 33 SERIES MARKER/CLEARANCE LAMP	A	$ 22.30
33250R3	LED 33 SERIES MARKER/CLEARANCE LAMP, BULK	A	$ 21.13
33250Y	LED 33 SERIES MARKER/CLEARANCE LAMP	A	$ 23.87
33250Y3	LED 33 SERIES MARKER/CLEARANCE LAMP, BULK	A	$ 22.70
33256Y	LED 33 SERIES M/C LAMP W/24" HARNESS	W	$ 43.49
33260B	LED 33 SERIES AUX. LAMP, BLUE	D	$ 48.40
33260C	LED 33 SERIES AUX. LAMP, CLEAR	D	$ 48.40
33260G	LED 33 SERIES AUX. LAMP, GREEN	D	$ 48.40
33260R	LED 33 SERIES AUX. LAMP, RED	D	$ 48.40
33260Y	LED 33 SERIES AUX. LAMP, YELLOW	D	$ 48.40
33265B	LED 33 SERIES AUX. LAMP, BLUE	D	$ 25.23
33265C	LED 33 SERIES AUX. LAMP, CLEAR	D	$ 25.23
33265G	LED 33 SERIES AUX. LAMP, GREEN	D	$ 25.23
33265R	LED 33 SERIES AUX. LAMP, RED	D	$ 25.23
33265Y	LED 33 SERIES AUX. LAMP, YELLOW	D	$ 25.23
33275R	LED 33 SERIES COMBO LAMP	A	$ 36.27
33275Y	LED 33 SERIES COMBO LAMP	A	$ 36.27
33285R	LED33 SERIES LAMP WITH CLEAR LENS	C	$ 37.63
33285Y	LED33 SERIES LAMP WITH CLEAR LENS	C	$ 37.63
33700	33 SERIES GROMMET	A	$ 1.50
33702	33 SERIES CLOSED BACK GROMMET	C	$ 2.33
33705	33 SERIES LICENSE LAMP GROMMET	A	$ 1.39
33711	33 SERIES BRANCH DEFLECTOR, GRAY	C	$ 4.97
33712	33 SERIES BRACKET, GRAY	C	$ 3.57
33715	33 SERIES CURVED BRACKET PC, GRAY	C	$ 4.97
33720	SEALING GROMMET, .070"-.125"	C	$ 1.67
33725	SEALING GROMMET, .125"-.250"	C	$ 1.67
33740R	33 SERIES '3 LAMP ID ASSEMBLY	A	$ 98.82
33751R	33 SERIES 5 LAMP ID ASSEMBLY	A	$ 198.29
33800	33 SERIES NYLON SECURITY FLANGE	A	$ 3.57
33805	33 SERIES LICENSE LAMP FLANGE	A	$ 2.99
33810	33 SERIES CHROME FLANGE	A	$ 4.11

35001R	LED 35 SERIES M/C 12 VOLT LAMP KIT	A	$ 23.28
35001R3	LED 35 SERIES M/C 12VOLT LAMP KIT, BULK	A	$ 22.25
35001Y	LED 35 SERIES M/C 12 VOLT LAMP KIT	B	$ 24.62
35001Y3	LED 35 SERIES M/C 12VOLT LAMP KIT, BULK	B	$ 23.59
35004R	LED 35 SERIES MARKER/CLEARANCE LAMP	C	$ 29.77
35004Y	LED 35 SERIES MARKER/CLEARANCE LAMP	C	$ 33.87
35007Y	LED 35 SERIES EUROPEAN APPROVED 12 VOLT KIT W/94863	C	$ 50.40
35009Y	LED 35 SERIES EUROPEAN APPROVED 24 VOLT KIT W/94862	D	$ 54.50
35033R	35 SERIES RED LAMP AND PIGTAIL KIT	W	$ 239.83
35034R	35 SERIES RED LAMP AND PIGTAIL KIT	W	$ 317.20
35035R	35 SERIES RED LAMP AND PIGTAIL KIT	W	$ 240.23
35036R	35 SERIES RED LAMP AND PIGTAIL KIT	W	$ 317.60
35075R	LED 35 SERIES M/C 12 VOLT LAMP KIT	B	$ 37.27
35075Y	LED 35 SERIES M/C 12 VOLT LAMP KIT	B	$ 35.57
35080R	LED 35 SERIES M/C 12 VOLT LAMP KIT	A	$ 33.29
35080Y	LED 35 SERIES M/C 12 VOLT LAMP KIT	B	$ 39.87
35200R	LED 35 SERIES M/C 12 VOLT LAMP KIT	A	$ 17.48
35200R3	LED 35 SERIES M/C 12 VOLT LAMP KIT, BULK	A	$ 16.55
35200Y	LED 35 SERIES M/C 12 VOLT LAMP KIT	B	$ 18.71
35200Y3	LED 35 SERIES M/C 12 VOLT LAMP KIT, BULK	B	$ 17.75
35201R	LED 35 SERIES M/C LAMP 12V W/CLEAR LENS AND HSNG	W	$ 21.23
35201Y	LED 35 SERIES M/C LAMP 12V W/CLEAR LENS AND HSNG	W	$ 22.77
35207Y	LED 35 SERIES EUROPEAN APPROVED 12 VOLT LAMP	C	$ 46.00
35209Y	LED 35 SERIES EUROPEAN APPROVED 24 VOLT LAMP	D	$ 50.82
35375R	LED 35 SERIES LAMP W/COMBO, 12V	W	$ 38.67
35375R3	LED 35 SERIES COMBO 12V LAMP, BULK	W	$ 34.80
35375Y	LED 35 SERIES LAMP W/COMBO, 12V	W	$ 35.40
35375Y3	LED 35 SERIES LAMP W/COMBO 12 VOLT, BULK	W	$ 31.87
3550	LED SIDE MARKER AND CLEARANCE LED SEALED 6 DIODE PATTERN	B	$ 16.50
3550A	LED SIDE MARKER AND CLEARANCE LED SEALED 6 DIODE PATTERN	B	$ 16.50
35720	35 SERIES MOUNTING BRACKET	C	$ 13.53
35740R	LED 35 SERIES ID BAR 6" CENTERS	A	$ 99.45
35740Y	LED 35 SERIES ID BAR 6" CENTERS	A	$ 101.56
35741R	LED 35 SERIES ID BAR 9" CENTERS	A	$ 106.14
35741Y	LED 35 SERIES ID BAR 9" CENTERS	A	$ 107.63
35880R	LED 35 SERIES OMNI VOLT LAMP	A	$ 29.45
35880Y	LED 35 SERIES OMNI VOLT LAMP	B	$ 34.55
35890R	LED 35 SERIES OMNI 10- 30 VOLT LAMP	C	$ 25.77
35890R3	LED 35 SERIES OMNI 10- 30 VOLT LAMP, BULK	C	$ 23.20
35890Y	LED 35 SERIES OMNI 10- 30 VOLT LAMP	C	$ 29.90
36041C	36 SERIES FLEXITE LICENSE LAMP 10-30 VOLT KIT	W	$ 62.63
36042C	36 SERIES FLEXITE SIDE LICENSE LAMP 10-30 VOLT KIT	W	$ 62.63
36100R	LED 36 SERIES FLEX LAMP, WINGED, SIDE EXIT WIRE, RED	A	$ 38.00
36100Y	LED 36 SERIES FLEX LAMP, WINGED, SIDE EXIT WIRE, YELLOW	A	$ 38.00
36105R	LED 36 SERIES FLEX LAMP, SIDE EXIT WIRE, RED	A	$ 36.70
36105Y	LED 36 SERIES FLEX LAMP, SIDE EXIT WIRE, YELLOW	A	$ 36.70
36110R	LED 36 SERIES FLEX LAMP, WINGED, REAR EXIT WIRE, RED	A	$ 38.90
36110Y	LED 36 SERIES FLEX LAMP, WINGED, REAR EXIT WIRE, YELLOW	A	$ 38.90
36115R	LED 36 SERIES FLEX LAMP, REAR EXIT WIRE, RED	A	$ 38.27
36115Y	LED 36 SERIES FLEX LAMP, REAR EXIT WIRE, YELLOW	A	$ 38.27
36130R	LED 36 SERIES FLEX LAMP, WINGED, REAR EXIT, 10-30V, RED	W	$ 46.40

36130Y	LED 36 SERIES FLEX LAMP, WINGED, REAR EXIT, 10-30V, YELLOW	W	$ 46.40
36140C	36 SERIES FLEXITE LICENSE LAMP 10-30V	W	$ 57.33
36145C	36 SERIES FLEXITE SIDE LICENSE LAMP 10-30V	W	$ 57.33
3613W	DIE CAST B/U LAMP BULB REPLACEABLE W/CHROME HSNG.	W	$ 84.90
3616	DIE CAST STOP TURN TAIL LAMP BULB REPLACEABLE W/CHROME HSNG	W	$ 87.77
36203R	FLEXITE PC LAMP W/3 WIRE 12 V, RED	W	$ 48.50
36203Y	FLEXITE PC LAMP W/3 WIRE 12 V,AMBER	W	$ 48.50
36204C	MDL 36 AUX FLEX-LITE; 10-30 V; REAR EXIT WIRES	D	$ 67.90
36205C	MDL 36 AUX FLEX-LITE; 10-30 V; WINGS; REAR EXIT WIRES	D	$ 68.77
36213R	36 SERIES 3 WIRE, WING, INSRTS LAMP	W	$ 77.57
36214C	MDL 36 AUX FLEX-LITE; 10-30 V; SIDE EXIT WIRES	D	$ 74.93
36215C	MDL 36 AUX FLEX-LITE; 10-30 V; WINGS; SIDE EXIT WIRES	D	$ 88.40
36705	MDL 36 M/C REAR EXIT BRACKET	A	$ 4.93
36710	36 SERIES LICENSE LAMP BRACKET GRAY	W	$ 5.30
36711	36 SERIES LICENSE LAMP BRACKET BLACK	W	$ 5.30
3693W	FLUSH MOUNT BULB REPLACEABLE CLEAR LAMP W/ CHROME HSNG.	W	$ 77.83
37	SIGNAL-STAT ECONOMY REFLECTIVE TAPE	W	$ 219.50
37-3	SIGNAL-STAT ECONOMY REFLECTIVE TAPE, BULK	W	$ 208.50
3701	SINGLE FACE DIE CAST PEDESTAL BULB REPLACEABLE LAMP W/GRAY HSNG.	W	$ 52.67
3702	SINGLE FACE DIE CAST PEDESTAL BULB REPLACEABLE LAMP W/GRAY HSNG.	W	$ 54.93
3710	SINGLE FACE DIE CAST PEDESTAL BULB REPLACEABLE LAMP W/GRAY HSNG.	W	$ 57.97
3711	SINGLE FACE DIE CAST PEDESTAL BULB REPLACEABLE LAMP W/CHROME HSNG.	W	$ 68.83
3711B	SINGLE FACE DIE CAST PEDESTAL BULB REPLACEABLE LAMP W/CHROME HSNG.	W	$ 74.17
3712	SINGLE FACE DIE CAST PEDESTAL BULB REPLACEABLE LAMP W/CHROME HSNG.	W	$ 72.40
3753	STUD MOUNT LAMP	W	$ 31.73
3753A	STUD MOUNT LAMP	D	$ 30.66
3754	STOP/TURN STUD MOUNT LAMP	W	$ 33.53
3755	STUD MOUNT BLACK POLY LAMP	D	$ 32.70
3755A	SINGLE FACE PC PEDESTAL SIGNAL BULB REPLACEABLE LAMP	W	$ 32.70
3756	STUD MOUNT BLACK POLY LAMP	W	$ 26.27
3762	SINGLE FACE DIE CAST PEDESTAL BULB REPLACEABLE LAMP W/GRAY HSNG	D	$ 58.47
3763	OBSOLETE		
3802	DOUBLE FACE DIE CAST, PEDESTAL ONE WIRE LAMP W/CHROME HSNG	C	$ 57.60
3805Y115	DOUBLE FACE DIE CAST, PEDESTAL TWO WIRE LMP RAILROAD CROSSING	W	$ 72.70
3810	DOUBLE FACE DIE CAST, PEDESTAL THREE WIRE LAMP W/GRAY HSNG	W	$ 70.30
3812	DOUBLE FACE DIE CAST, PEDESTAL TWO WIRE LAMP W/CHROME HSNG	D	$ 60.30
3850	DOUBLE FACE BLACK PC BULB REPLACEABLE LAMP	D	$ 31.27
3850AA	DOUBLE FACE BLACK PC BULB REPLACEABLE LAMP	C	$ 32.43
3853AA	PEDESTAL STYLE TWO WIRE LAMPS W/"KNOCK DOWN" DESIGN	D	$ 71.77
3854	PEDESTAL STYLE THREE WIRE LAMPS W/"KNOCK DOWN" DESIGN	D	$ 73.37
3860	DOUBLE FACE, DIE CAST, SNAP-GRIP LENS, T/S, BLACK HSNG	W	$ 60.17
3861	DOUBLE FACE, DIE CAST, SNAP-GRIP LENS, T/S, CHROME HSNG	W	$ 68.97
3862	DOUBLE FACE, DIE CAST, SNAP-GRIP LENS, S/T/T W/GROUND WIRE	W	$ 64.93
3863	DOUBLE FACE, DIE CAST, SNAP-GRIP LENS, S/T/T, BLACK HSNG	W	$ 69.07
40001Y	4" S/T LAMP KIT W/GROMMET MOUNT	B	$ 23.07
40002R	40 SERIES S/T/T LAMP KIT	A	$ 22.44
40002R3	40 SERIES S/T/T LAMP KIT, BULK	A	$ 18.83
40002RP	40 SERIES S/T/T LAMP KIT, PALLET	A	$ 17.53
40002Y	40 SERIES S/T/T LAMP KIT	B	$ 23.37
40002Y3	40 SERIES S/T/T LAMP KIT, BULK	B	$ 19.63
40003	40 SERIES DOME LAMP KIT	C	$ 26.20

40003-3	40 SERIES DOME LAMP KIT, BULK	C	$ 23.50
40004	40 SERIES B/U LAMP KIT	B	$ 21.67
40004-3	40 SERIES B/U LAMP KIT, BULK	B	$ 19.47
40004-P	40 SERIES B/U LAMP KIT, PALLET	B	$ 17.42
40006R	40 SERIES SEALED S/T/T LAMP KIT	W	$ 23.87
40009R	40 SERIES S/T/T LAMP KIT, 24 VOLT	B	$ 32.57
40009R3	40 SERIES S/T/T LAMP KIT, 24 VOLT, BULK	B	$ 29.30
40009Y	40 SERIES S/T/T LAMP KIT, 24 VOLT	B	$ 32.57
40009Y3	40 SERIES S/T/T LAMP KIT, 24 VOLT, BULK	B	$ 29.30
40011	40 SERIES DOME LAMP CLEAR BACK KIT	C	$ 25.47
40012	40 SERIES B/U LAMP KIT, 24 VOLT	C	$ 36.23
40015R	40 SERIES REFLECTORIZED S/T/T LAMP KIT	C	$ 25.87
40015R3	40 SERIES REFLECTORIZED S/T/T LAMP KIT, BULK	C	$ 24.03
40023	40 SERIES SEALED DOME LAMP W/FLANGE KIT	W	$ 22.67
40023-3	40 SERIES SEALED DOME LAMP W/FLANGE KIT, BULK	W	$ 22.33
40024	40 SERIES SEALED B/U W/FLANGE KIT	W	$ 22.67
40028R	40 SERIES ECONOMY S/T/T LAMP KIT	A	$ 15.67
40028R3	40 SERIES ECONOMY S/T/T LAMP KIT, BULK	A	$ 14.06
40028RP	40 SERIES ECONOMY S/T/T LAMP KIT, PALLET	A	$ 13.02
40028Y	40 SERIES ECONOMY S/T/T LAMP KIT	A	$ 15.67
40028Y3	40 SERIES ECONOMY S/T/T LAMP KIT, BULK	A	$ 14.06
40028YP	40 SERIES ECONOMY S/T/T LAMP KIT, PALLET	A	$ 13.26
40029R	40 SERIES ECONOMY S/T/T W/FLANGE KIT	A	$ 13.68
40029R3	40 SERIES ECONOMY S/T/T W/FLANGE KIT, BULK	A	$ 13.00
40041Y	SUPER 40 TURN LAMP KIT	B	$ 23.43
40042R	SUPER 40 S/T/T LAMP KIT	A	$ 26.39
40042R3	SUPER 40 S/T/T LAMP KIT, BULK	A	$ 22.03
40042RP	SUPER 40 S/T/T LAMP KIT, PALLET	A	$ 21.24
40044	SUPER 40 B/U LAMP KIT	C	$ 29.83
40044-3	SUPER 40 B/U LAMP KIT, BULK	C	$ 26.77
40048R	SUPER 40 REFLECTORIZED S/T/T LAMP KIT	C	$ 34.37
40048R3	SUPER 40 REFLECTORIZED S/T/T LAMP KIT, BULK	C	$ 30.97
40058R	SUPER 40 S/T/T W/FLANGE LAMP KIT	D	$ 30.10
40071	40 SERIES B/U W/BLACK FLANGE LAMP KIT	C	$ 24.50
4015	MULTI-FUNCTION BULB REPLACEABLE THREE STUD LAMP, LH	D	$ 85.77
4016	MULTI-FUNCTION BULB REPLACEABLE THREE STUD LAMP, RH	D	$ 87.80
4017	MULTI-FUNCTION BULB REPLACEABLE THREE STUD LAMP, LH	D	$ 64.50
4018	MULTI-FUNCTION BULB REPLACEABLE THREE STUD LAMP, RH	D	$ 64.50
40201Y	40 SERIES TAIL TURN LAMP	B	$ 15.20
40201Y3	40 SERIES TAIL TURN LAMP, BULK	B	$ 13.23
40202R	40 SERIES S/T/T LAMP	A	$ 15.23
40202R3	40 SERIES S/T/T LAMP, BULK	A	$ 11.20
40202RP	40 SERIES S/T/T LAMP, PALLET	A	$ 10.62
40202Y	40 SERIES TURN SIGNAL LAMP	A	$ 15.23
40202Y3	40 SERIES TURN SIGNAL LAMP, BULK	A	$ 12.45
40202YP	40 SERIES TURN SIGNAL LAMP, PALLET	A	$ 11.20
40203	40 SERIES DOME LAMP	C	$ 18.27
40203-3	40 SERIES DOME LAMP, BULK	C	$ 16.53
40204	40 SERIES B/U LAMP	A	$ 14.42
40204-3	40 SERIES B/U LAMP, BULK	A	$ 13.02
40204-P	40 SERIES B/U LAMP PALLET	A	$ 11.76

40206C	40 SERIES B/U CLEAR BACK LAMP	B	$ 14.63
40206C3	40 SERIES B/U CLEAR BACK LAMP, BULK	B	$ 13.23
40206R	40 SERIES S/T/T CLEAR BACK LAMP	B	$ 14.63
40206R3	40 SERIES S/T/T CLEAR BACK LAMP, BULK	B	$ 13.23
40206Y	40 SERIES S/T/T CLEAR BACK LAMP	D	$ 15.57
40207	40 SERIES AUXILIARY LAMP W/ ANGLED ILLUMINATION	C	$ 28.70
40209R	40 SERIES S/T/T LAMP, 24 VOLT	B	$ 25.33
40209R3	40 SERIES S/T/T LAMP, 24 VOLT, BULK	B	$ 22.93
40209Y	40 SERIES S/T/T LAMP, 24 VOLT	C	$ 28.87
40209Y3	40 SERIES S/T/T LAMP, 24 VOLT, BULK	C	$ 26.17
40211	40 SERIES DOME CLEAR B/U LAMP	C	$ 14.20
40212	40 SERIES B/U LAMP, 24 VOLT	C	$ 28.37
40215R	40 SERIES REFLECTORIZED S/T/T LAMP	B	$ 16.03
40215R3	40 SERIES REFLECTORIZED S/T/T LAMP, BULK	B	$ 14.83
40215RP	40 SERIES REFLECTORIZED S/T/T LAMP, PALLET	B	$ 13.17
40222R	40 SERIES S/T/T W/FLANGE LAMP	C	$ 20.57
40222R3	40 SERIES S/T/T W/FLANGE LAMP, BULK	C	$ 18.57
40222RP	40 SERIES S/T/T W/FLANGE LAMP, PALLET	C	$ 16.73
40223	40 SERIES DOME LAMP W/ FLANGE LAMP	C	$ 18.83
40224	40 SERIES B/U W/FLANGE LAMP	D	$ 18.83
40227	40 SERIES DOME LAMP	W	$ 22.40
40229R	40 SERIES ECONOMY W/FLANGE LAMP	B	$ 10.87
40229R3	40 SERIES ECONOMY W/FLANGE LAMP, BULK	B	$ 9.80
40229RP	40 SERIES ECONOMY W/FLANGE LAMP, PALLET	B	$ 8.83
4023	MULTI-FUNCTION THREE STUD BULB REPLACEABLE, LH W/LICENSE SHOCK/MOUNT	C	$ 93.07
40232R	40 SERIES S/T/T REFLECTORIZED, 24 VOLT	C	$ 30.57
40233R	40 SERIES S/T/T W/BLACK FLANGE LAMP	C	$ 20.57
40233R3	40 SERIES S/T/T W/BLACK FLANGE LAMP, BULK	C	$ 18.57
40233Y	40 SERIES S/T/T W/BLACK FLANGE LAMP	C	$ 20.57
40233Y3	40 SERIES S/T/T W/BLACK FLANGE LAMP, BULK	C	$ 18.57
4024	MULTI-FUNCTION THREE STUD BULB REPLACEABLE, RH W/LICENSE SHOCK/MOUNT	C	$ 93.07
40241R	SUPER 40 TURN SIGNAL LAMP	D	$ 18.90
40241Y	SUPER 40 TURN SIGNAL LAMP	D	$ 18.90
40242R	SUPER 40 S/T/T LAMP	A	$ 19.40
40242R3	SUPER 40 S/T/T LAMP, BULK	A	$ 15.86
40242RP	SUPER 40 S/T/T LAMP, PALLET	A	$ 15.04
40242Y	SUPER 40 TURN SIGNAL LAMP	B	$ 20.93
40242Y3	SUPER 40 TURN SIGNAL LAMP, BULK	B	$ 18.93
40244	SUPER 40 B/U LAMP	B	$ 19.27
40244-3	SUPER 40 B/U LAMP, BULK	B	$ 17.40
40244-P	SUPER 40 B/U LAMP, PALLET	B	$ 15.67
40247R	40 SERIES CENTER HIGH MOUNT STOP LAMP	B	$ 14.97
40248R	SUPER 40 S/T/T REFLECTORIZED LAMP	B	$ 22.87
40248R3	SUPER 40 S/T/T REFLECTORIZED LAMP, BULK	B	$ 20.70
40248RP	SUPER 40 S/T/T REFLECTORIZED LAMP, PALLET	B	$ 18.57
4025	OBSOLETE		
40258R	SUPER 40 S/T/T W/FLANGE LAMP	D	$ 25.80
40258R3	SUPER 40 S/T/T W/FLANGE LAMP, BULK	D	$ 23.33
40258Y	SUPER 40 S/T/T W/FLANGE LAMP	D	$ 25.80
40259R	SUPER 40 S/T/T W/BLACK FLANGE LAMP	C	$ 25.80
4026	OBSOLETE		

40260	SUPER 40 B/U W/ BLACK FLANGE	D	$ 23.70
40261	SUPER 40 B/U W/ GRAY FLANGE	D	$ 23.70
40262	40 SERIES B/U W/BLK FLANGE LAMP	C	$ 20.57
40262-3	40 SERIES B/U W/BLK FLANGE LAMP, BULK	C	$ 18.57
4027	MULTI-FUNCTION UNIVERSAL THREE STUD BULB REPLACEABLE	B	$ 45.93
4027-3	MULTI-FUNCTION UNIVERSAL THREE STUD BULB REPLACEABLE, BULK	B	$ 40.17
40270C	4" ROUND LENS SKYLIGHT CLEAR LENS	W	$ 24.07
40271C	4" ROUND LENS SKYLIGHT CLEAR LENS	W	$ 24.07
40275C	4" ROUND LENS SKYLIGHT CLEAR LENS	W	$ 24.07
4027D	MULTI-FUNCTION UNIVERSAL THREE STUD BULB REPLACEABLE, DISPLAY	B	$ 59.53
4028	MULTI-FUNCTION TWO STUD PC BULB REPLACEABLE LAMP	B	$ 60.70
40282R	40 SERIES ECONOMY S/T/T LAMP	A	$ 8.59
40282R3	40 SERIES ECONOMY S/T/T LAMP, BULK	A	$ 6.97
40282RP	40 SERIES ECONOMY S/T/T LAMP, PALLET	A	$ 6.80
40282Y	40 SERIES ECONOMY TAIL TURN LAMP	B	$ 8.97
40282Y3	40 SERIES ECONOMY TAIL TURN LAMP, BULK	B	$ 8.07
40282YP	40 SERIES ECONOMY TAIL TURN LAMP, PALLET	B	$ 7.30
40285R	40 SERIES ECONOMY S/T/T LAMP, REFLECTORIZED	B	$ 12.73
40302R	40 SERIES BULB REPLACEABLE S/T/T LAMP KIT	C	$ 25.87
40302R3	40 SERIES BULB REPLACEABLE S/T/T LAMP KIT, BULK	C	$ 25.37
40302Y	40 SERIES BULB REPLACEABLE TURN SIGNAL LAMP KIT	W	$ 25.87
40302Y3	40 SERIES BULB REPLACEABLE TURN SIGNAL LAMP KIT, BULK	W	$ 25.37
40306	40 SERIES BULB REPLACEABLE B/U LAMP KIT	W	$ 22.93
40306-3	40 SERIES BULB REPLACEABLE B/U LAMP KIT, BULK	W	$ 22.37
40403	40 SERIES GROMMET MOUNT KIT	C	$ 8.53
40403-3	40 SERIES GROMMET MOUNT KIT, BULK	C	$ 7.60
4050	LED SIGNAL STAT S/T/T 4" ROUND LAMP	B	$ 39.00
4050-3	LED SIGNAL STAT S/T/T 4" ROUND LAMP, BULK	B	$ 37.06
4050A	LED SIGNAL STAT S/T/T 4" ROUND LAMP	B	$ 39.00
4050A-3	LED SIGNAL STAT S/T/T 4" ROUND LAMP, BULK	B	$ 37.06
4051	LED SIGNAL STAT S/T/T 4" ROUND CLEAR LAMP LENS	D	$ 41.58
4051-3	LED SIGNAL STAT S/T/T 4" ROUND CLEAR LAMP LENS, BULK	D	$ 39.51
4051A	LED SIGNAL STAT S/T/T 4" ROUND CLEAR LAMP LENS	D	$ 41.58
4051A-3	LED SIGNAL STAT S/T/T 4" ROUND CLEAR LAMP LENS, BULK	D	$ 39.51
4053	LED SIGNAL STAT S/T/T 4" ROUND LAMP W/ INT FLANGE, RED	B	$ 41.43
4053-3	LED SIGNAL STAT S/T/T 4" ROUND LAMP W/ INT FLANGE, RED, BULK	B	$ 39.37
4053A	LED SIGNAL STAT F/P/T 4" ROUND LAMP W/ INT FLANGE, AMBER	B	$ 41.43
4053A-3	LED SIGNAL STAT F/P/T 4" ROUND LAMP W/ INT FLANGE, AMBER, BULK	B	$ 39.37
4058	LED SIGNAL STAT S/T/T 4" ROUND 10 DIODE LAMP, RED	B	$ 34.00
4058-3	LED SIGNAL STAT S/T/T 4" ROUND 10 DIODE LAMP, RED, BULK	B	$ 30.60
4058A	LED SIGNAL STAT F/P/T 4" ROUND 10 DIODE LAMP, AMBER	B	$ 34.00
4058A-3	LED SIGNAL STAT F/P/T 4" ROUND 10 DIODE LAMP, AMBER, BULK	B	$ 30.60
4060C	LED SIGNAL STAT B/U	B	$ 122.06
4060C-3	LED SIGNAL STAT B/U, BULK	B	$ 115.94
40626	LED 44 SERIES FLANGE MOUNT MODULE, LH	W	$ 610.28
40627	LED 44 SERIES FLANGE MOUNT MODULE, RH	W	$ 610.28
40637	LED SUPER 44 S/T/T MODULE, RH	C	$ 279.85
40638	LED SUPER 44 S/T/T MODULE, LH	C	$ 279.85
4063C	LED SIGNAL STAT BACK-UP 4" ROUND LAMP W/ INT FLANGE, CLEAR	B	$ 135.17
4063C-3	LED SIGNAL STAT BACK-UP 4" ROUND LAMP W/ INT FLANGE, CLEAR, BULK	B	$ 128.40
40680	40 SERIES MODULE BRACKET, LH	W	$ 533.43

40681	40 SERIES MODULE BRACKET, RH	W	$ 533.43
40700	40 SERIES GROMMET	A	$ 3.82
40700-3	40 SERIES GROMMET , BULK	A	$ 3.18
40701	40 SERIES GROMMET, GRAY	C	$ 5.00
40702	40 SERIES GROMMET, WHITE	C	$ 6.83
40703	40 SERIES GROMMET, BROWN	C	$ 7.30
40715	40 SERIES MOUNTING BRACKET	C	$ 34.67
40715-3	40 SERIES MOUNTING BRACKET, BULK	C	$ 31.17
40719	40 SERIES STEEL MOUNTING BRACKET W/O FLANGE	C	$ 10.80
40720	40 SERIES STEEL MOUNTING BRACKET W/FLANGE	A	$ 11.73
40720-3	40 SERIES STEEL MOUNTING BRACKET W/FLANGE, BULK	A	$ 10.57
40721	40 SERIES MOUNTING FLANGE	W	$ 20.50
40722	40 SERIES MODULE BOX	C	$ 37.70
40725	40 SERIES METAL MODULE BOX	C	$ 53.47
40725-3	40 SERIES METAL MODULE BOX, BULK	C	$ 48.13
40726	40 SERIES L BRACKET SLOTTED BACK	D	$ 10.15
40742	40 SERIES MODULE W/TWO S/T/T LAMPS, LH	W	$ 90.93
40742-3	40 SERIES MODULE W/TWO S/T/T LAMPS, LH, BULK	W	$ 81.82
40743	40 SERIES MODULE W/TWO S/T/T LAMPS, RH	W	$ 90.93
40743-3	40 SERIES MODULE W/TWO S/T/T LAMPS, RH, BULK	W	$ 81.82
40746	40 SERIES MODULE FLANGED W/TWO S/T/T LAMPS, LH	B	$ 114.60
40746-3	40 SERIES MODULE FLANGED W/TWO S/T/T LAMPS, LH, BULK	B	$ 103.13
40747	40 SERIES MODULE FLANGED W/TWO S/T/T LAMPS, RH	B	$ 114.60
40747-3	40 SERIES MODULE FLANGED W/TWO S/T/T LAMPS, RH, BULK	B	$ 103.13
40748	SUPER 40 MODULE W/B/U KIT	W	$ 101.77
40749	SUPER 40 MODULE W/B/U KIT	W	$ 101.77
40754	SUPER 40 MODULE W/B/U KIT	D	$ 116.32
40755	SUPER 40 MODULE W/B/U KIT	D	$ 116.32
40756	40 SERIES MODULE S/T/T W/SIDE MARKER ROADSIDE, LH	A	$ 96.53
40756-3	40 SERIES MODULE S/T/T W/SIDE MARKER ROADSIDE, LH, BULK	A	$ 86.87
40757	40 SERIES MODULE S/T/T W/SIDE MARKER ROADSIDE, RH	A	$ 96.53
40757-3	40 SERIES MODULE S/T/T W/SIDE MARKER ROADSIDE, RH, BULK	A	$ 86.87
40758	40 SERIES METAL MODULE S/T/T AND B/U, LH	B	$ 266.78
40759	40 SERIES METAL MODULE S/T/T AND B/U, RH	B	$ 266.78
40762	40 SERIES METAL MODULE S/T/T AND B/U, LH W/SIDE TURN	B	$ 198.90
40763	40 SERIES METAL MODULE S/T/T AND B/U, RH W/SIDE TURN	B	$ 198.90
40790	40 SERIES METAL MODULE S/T/T AND B/U, LH W/SIDE TURN	B	$ 233.44
40791	40 SERIES METAL MODULE S/T/T AND B/U, RH W/SIDE TURN	B	$ 233.44
40802	40 SERIES "WIDE TURN" OPEN BACK, LH	B	$ 114.84
40803	40 SERIES "WIDE TURN" OPEN BACK, RH	B	$ 114.84
40804	40 SERIES "WIDE TURN" EnCLOSED BACK, LH	B	$ 152.55
40805	40 SERIES "WIDE TURN" EnCLOSED BACK, RH	B	$ 152.55
40808	LED 3 LAMP MODULE USPS, RH	B	$ 548.17
40809	LED 3 LAMP MODULE USPS, LH	B	$ 548.17
40810	WIDE TURN BRACKET	C	$ 27.56
40812	LED "WIDE TURN" EnCLOSED BACK, RH	W	$ 690.85
40819	40 SERIES TRP GROMMET	C	$ 7.57
40830	LED WIDE TURN MODULE EnCLOSED BACK, LH	W	$ 690.85
40844	OBSOLETE		
40850	40 SERIES POWER Unit MODULE	B	$ 360.56
40894	40 SERIES POWER Unit MODULE REPLACEMENT FOR PETERBILT	D	$ 641.65

4091	COMBO S/M AND SIDE T/S BULB REPLACEABLE LAMP	W	$ 33.63
4091A	COMBO S/M AND SIDE T/S BULB REPLACEABLE LAMP	W	$ 32.47
4093	COMBO S/M AND SIDE T/S SEALED LAMP	W	$ 33.07
4093A	COMBO S/M AND SIDE T/S SEALED LAMP	W	$ 31.93
4094	COMBO S/M AND SIDE T/S BULB REPLACEABLE LAMP W/9463 HARN.	W	$ 47.37
4094A	COMBO S/M AND SIDE T/S BULB REPLACEABLE LAMP W/9463 HARN.	C	$ 47.53
4094SW	COMBO S/M AND SIDE T/S BULB REPLACEABLE LAMP W/9463 HARN.	W	$ 54.70
4095	COMBO S/M AND SIDE T/S SEALED LAMP W/9463 HARNASS	W	$ 49.00
4095A	COMBO S/M AND SIDE T/S SEALED LAMP W/9463 HARNASS	C	$ 47.27
4097A	NAVISTAR FRONT SIGNAL BULB REPLACEABLE LAMP W/HSNG. ONLY	W	$ 95.70
41	SCREW MOUNT 3" REFLECTOR	A	$ 4.12
41-3	SCREW MOUNT 3" REFLECTOR, BULK	A	$ 3.78
41A	SCREW MOUNT 3" REFLECTOR	A	$ 4.12
41A-3	SCREW MOUNT 3" REFLECTOR, BULK	A	$ 3.78
41005R	41 SERIES S/T/T AND CLEARANCE LAMP KIT, LH	C	$ 64.40
41006R	41 SERIES S/T/T AND CLEARANCE LAMP KIT, RH	C	$ 64.40
41007R	41 SERIES UNIVERSAL LAMP KIT	C	$ 52.43
41008R	41 SERIES UNIVERSAL LAMP KIT W/O PLUGS	C	$ 48.00
41202R	41 SERIES S/T/T AND CLEARANCE LAMP, LH	C	$ 23.97
41202R3	41 SERIES S/T/T AND CLEARANCE LAMP, LH, BULK	C	$ 21.77
41203R	41 SERIES S/T/T AND CLEARANCE LAMP, RH	C	$ 23.97
41203R3	41 SERIES S/T/T AND CLEARANCE LAMP, RH, BULK	C	$ 21.77
425WD	LICENSE ILLUMINATOR BULB REPLACEABLE, GRAY, DISPLAY	D	$ 32.57
426W	LICENSE ILLUMINATOR BULB REPLACEABLE, CHROME	D	$ 39.90
42722	42 SERIES LICENSE PLATE BRACKET	D	$ 12.10
43	SCREW MOUNT 3" REFLECTOR	C	$ 9.33
43-3	SCREW MOUNT 3" REFLECTOR, BULK	C	$ 8.43
43A	SCREW MOUNT 3" REFLECTOR	D	$ 9.33
43A-3	SCREW MOUNT 3" REFLECTOR, BULK	D	$ 8.43
433WD	UTILITY LAMP BULB RELACEABLE, DISPLAY	C	$ 26.83
434WD	CHROME UTILITY BULB REPLACEABLE, DISPLAY	B	$ 13.20
435W	WHITE AND CHROME BULB REPLACEABLE COMBO	D	$ 69.07
44001Y	LED SUPER 44 REAR TURN GROMMET MOUNT LAMP KIT	B	$ 177.27
44001Y3	LED SUPER 4 REAR TURN GROMMET MOUNT LAMP KIT, BULK	B	$ 168.20
44002R	LED SUPER 44 42 DIODE S/T/T LAMP KIT	B	$ 147.93
44002R3	LED SUPER 44 42 DIODE S/T/T LAMP KIT, BULK	B	$ 140.00
44003Y	LED SUPER 44 F/P/T GROMMET MOUNT LAMP KIT	B	$ 171.80
44018Y	LED AUXILIARY LAMP KIT	W	$ 244.78
44021Y	LED SUPER 44 REAR TURN W/GRAY FLANGE KIT	B	$ 166.60
44022R	LED SUPER 44 REAR TURN W/GRAY FLANGE KIT	B	$ 142.35
44023Y	LED SUPER 44 F/P/T W/GRAY FLANGE KIT	A	$ 165.61
44024Y	LED SUPER 44 F/P/T W/BLACK FLANGE KIT	A	$ 165.61
44026R	LED SUPER 44 S/T/T W/BLACK FLANGE MOUNT KIT	B	$ 142.35
44027Y	LED SUPER 44 REAR TURN W/BLACK FLANGE KIT	A	$ 166.60
44030R	LED SUPER 44 S/T/T, 6 DIODE GROMMET MOUNT LAMP KIT	B	$ 61.64
44030R3	LED SUPER 44 S/T/T, 6 DIODE GROMMET MOUNT LAMP KIT, BULK	B	$ 58.17
44032R	LED SUPER 44 S/T/T W/GRAY FLANGE, 6 DIODE LAMP KIT	B	$ 58.79
44032R3	LED SUPER 44 S/T/T W/GRAY FLANGE, 6 DIODE LAMP KIT, BULK	B	$ 55.86
44034R	LED SUPER 44 S/T/T , 7, 8 & 10 GAUGE STAINLESS STEEL FLANGE	B	$ 92.30
44036R	LED SUPER 44 S/T/T W/GRY FLANGE, 6 DIODE LAMP KIT	B	$ 58.80
44036R3	LED SUPER 44 S/T/T W/GRY FLANGE, 6 DIODE LAMP KIT, BULK	B	$ 55.87

44038R	LED SUPER 44 S/T/T W/BLK FLANGE, 6 DIODE LAMP KIT	A	$ 58.80
44040C	LED 44 SERIES B/U ONE LAMP KIT	A	$ 557.24
44041C	LED 44 SERIES B/U TWO LAMP KIT	A	$ 300.66
44042C	LED 44 SERIES DOME LAMP KIT	A	$ 493.27
44044C	LED 44 SERIES B/U ONE LAMP W/FLANGE KIT	A	$ 554.89
44045C	LED 44 SERIES B/U TWO LAMP W/FLANGE KIT	A	$ 298.31
44046C	LED 44 SERIES DOME LAMP W/FLANGE KIT	A	$ 490.93
44057C	LED SUPER 44 6 DIODE DOME LAMP W/HARDWIRE GROMMET KIT	A	$ 153.78
44071Y	LED SUPER 44 F/P/T GROMMET MOUNT LAMP KIT, DIAMOND SHELL	B	$ 188.73
44082R	LED SUPER 44 S/T/T GROMMET MOUNT LAMP KIT, DIAMOND SHELL	B	$ 158.43
44083R	LED 44 SERIES S/T/T LAMP KIT	W	$ 190.73
44091Y	44 SERIES LED F/P/T ACRYLIC KIT	W	$ 137.10
44092R	LED SUPER 44 S/T/T 6 DIODE GROMMET MOUNT LAMP KIT, DIAMOND SHELL	B	$ 74.47
44092R3	LED SUPER 44 S/T/T 6 DIODE GROMMET MOUNT LAMP KIT, DIAMOND SHELL, BULK	B	$ 70.37
44092Y	44 SERIES LED F/P/T BLK FLNG LAMP KIT	C	$ 139.37
44093Y	44 SERIES LED F/P/T WHT FLNG LAMP KIT	C	$ 139.37
44094Y	44 SERIES LED F/P/T 12V LAMP KIT	C	$ 138.97
44095Y	44 SERIES LED F/P/T GRAY FLNG LAMP KIT	C	$ 139.37
44101R	LED 44 SERIES STROBE GROMMET MOUNT	B	$ 141.17
44101Y	LED 44 SERIES STROBE GROMMET MOUNT	B	$ 137.60
44102R	LED 44 SERIES STROBE GROMMET MOUNT	B	$ 142.97
44102Y	LED 44 SERIES STROBE GROMMET MOUNT	B	$ 139.60
44103Y	LED 44 SERIES STROBE FLANGE MOUNT	B	$ 136.30
44104Y	LED 44 SERIES STROBE FLANGE MOUNT	B	$ 138.30
44107Y	44 SERIES 6 LED T/S LAMP KIT	W	$ 83.70
44108Y	44 SERIES 6 LED T/S LAMP KIT	W	$ 87.33
44109Y	44 SERIES 6 LED TURN LAMP KIT	W	$ 84.67
44110Y	LED SUPER 44 STROBE W/ OVERRIDE KIT	W	$ 889.27
44113Y	44 SERIES 6 LED REAR TRN KIT	W	$ 87.60
44114Y	LED 4 LAMP (2 IN-PHASE, 2 OUT-PHASE), W/ BLUNT CUT WIRE, KIT	W	$ 716.47
44121R	44 SERIES LED STOP/REAR GROMMET KIT	W	$ 168.83
44123Y	44 SERIES LED TURN GROMMET KIT	W	$ 149.90
44141C	LED 44 SERIES B/U TWO LAMP KIT, DIAMOND SHELL	D	$ 349.27
44145C	LED 44 SERIES B/U TWO LAMP W/FLANGE KIT, DIAMOND SHEL	D	$ 346.63
44146C	LED 44 SERIES B/U, TWO-LAMP KIT W/ BLACK FLANGE	D	$ 330.10
44180C	LED SUPER 44 B/U 6 DIODE GROMMET KIT	A	$ 140.72
44181C	LED SUPER 44 B/U 6 DIODE LAMP & GRAY FLANGE KIT	A	$ 138.07
44182C	LED SUPER 44 B/U 6 DIODE LAMP & BLACK FLANGE KIT	A	$ 138.07
44183C	LED SUPER 44 B/U 6 DIODE LAMP KIT	A	$ 152.93
44184C	LED SUPER 44 B/U 6 DIODE GROMMET KIT, HARD COAT	A	$ 147.32
44201Y	LED SUPER 44 REAR TURN LAMP	A	$ 156.43
44202R	LED SUPER 44 42 DIODE S/T/T LAMP	B	$ 130.90
44203Y	LED SUPER 44 F/P/T LAMP	A	$ 154.12
44203Y3	LED SUPER 44 F/P/T LAMP, BULK	A	$ 146.40
44205C	LED 44 SERIES B/U ONE LAMP SYSTEM	A	$ 542.85
44206C	LED 44 SERIES B/U TWO LAMP SYSTEM	A	$ 286.30
44207C	LED 44 SERIES DOME LAMP	A	$ 478.89
44211R	LED 44 SERIES STROBE LAMP GROMMET MOUNT	B	$ 125.60
44211Y	LED 44 SERIES STROBE LAMP GROMMET MOUNT	B	$ 120.37
44212R	LED 44 SERIES STROBE LAMP GROMMET MOUNT	B	$ 127.37
44212Y	LED 44 SERIES STROBE LAMP GROMMET MOUNT	B	$ 122.30

44213R	LED 44 SERIES STROBE LAMP FLANGE MOUNT	B	$ 125.97
44213Y	LED 44 SERIES STROBE LAMP FLANGE MOUNT	B	$ 120.73
44214R	LED 44 SERIES STROBE LAMP FLANGE MOUNT	B	$ 127.77
44214Y	LED 44 SERIES STROBE LAMP FLANGE MOUNT	B	$ 122.77
44216R	LED 44 SERIES STROBE WORK LAMP	C	$ 168.13
44216Y	LED 44 SERIES STROBE WORK LAMP	C	$ 159.70
44217Y	LED SUPER 44 STROBE W/ OVERRIDE KIT IN-PHASE	W	$ 222.30
44218Y	LED SUPER 44 STROBE W/ OVERRIDE KIT OUT-PHASE	W	$ 222.30
44221Y	LED SUPER 44 REAR TURN LAMP W/GRAY FLANGE	B	$ 161.50
44222R	LED SUPER 44 42 DIODE S/T/T LAMP W/GRAY FLANGE	B	$ 139.57
44223Y	LED SUPER 44 F/P/T LAMP W/GRAY FLANGE	A	$ 157.62
44224Y	LED SUPER 44 F/P/T LAMP W/BLACK FLANGE	A	$ 157.62
44226R	LED SUPER 44 42 DIODE S/T/T LAMP W/BLACK FLANGE	B	$ 139.47
44227Y	LED SUPER 44 REAR TURN W/BLACK FLANGE	A	$ 155.62
44231Y	LED 44 SERIES REAR TURN LAMP W/ WHITE FLANGE	B	$ 161.50
44233Y	LED 44 SERIES F/P/T LAMP W/WHITE FLANGE	A	$ 160.82
44235C	LED 44 SERIES B/U ONE LAMP SYSTEM W/FLANGE	A	$ 543.87
44236C	LED 44 SERIES B/U TWO LAMP SYSTEM W/FLANGE	A	$ 287.29
44237C	LED 44 SERIES DOME LAMP W/FLANGE	A	$ 479.94
44239C	LED 44 SERIES B/U LAMP W/WHITE FLANGE FOR TWO-LAMP SYSTEM	A	$ 287.29
44240C	LED 44 SERIES B/U LAMP W/BLACK FLANGE FOR TWO-LAMP SYSTEM	A	$ 287.29
44248Y	LED IN-PHASE LAMP W/BLUNT CUT WIRE, YELLOW	W	$ 179.13
44249Y	LED OUT-PHASE LAMP W/BLUNT CUT WIRE, YELLOW	W	$ 179.13
44253R	LED SUPER 44 17 DIODE S/T/T LAMP, 24 VOLT	C	$ 121.80
44266R	LED SUPER 44 17 DIODE S/T/T LAMP W/BLACK FLANGE, 24 VOLT	C	$ 123.30
44273Y	44 SERIES REAR TURN LAMP 24 V	W	$ 179.20
44276Y	LED SUPER 44 REAR TURN W/BLACK FLANGE, 24 VOLT	C	$ 223.83
44280Y	44 SERIES 6 LED TURN LAMP 12V	B	$ 67.43
44281Y	44 SERIES 6 LED T/S LAMP 12V	A	$ 65.67
44283Y	44 SERIES R/T 6 LED LAMP 24V	W	$ 65.93
44284Y	44 SERIES 6 LED TURN LAMP 12V	B	$ 67.73
44285Y	44 SERIES 6 LED T/S LAMP 12V	B	$ 68.50
44286Y	44 SERIES R/T 6 LED LAMP 24V	V	$ 67.17
44287Y	44 SERIES 6 LED TURN LAMP 12V	B	$ 71.17
44289Y	44 SERIES 6 LED TURN LAMP 12V	A	$ 66.93
44290Y	44 SERIES 6 LED T/S LAMP 12V	W	$ 71.63
44291Y	44 SERIES LED F/P/T ACRYLIC	W	$ 127.30
44292Y	44 SERIES LED F/P/T BLK FLNG	C	$ 129.57
44293Y	44 SERIES LED F/P/T WHT FLNG	C	$ 129.57
44294Y	44 SERIES LED F/P/T 12V	C	$ 125.33
44295Y	44 SERIES LED F/P/T GRAY FLNG	C	$ 129.57
44302R	LED SUPER 44 S/T/T 6 DIODE LAMP	B	$ 45.25
44302R3	LED SUPER 44 S/T/T 6 DIODE LAMP, BULK	B	$ 42.94
44304C	44 SERIES LED AUXILARY LAMP	A	$ 149.90
44304C3	44 SERIES LED AUXILARY LAMP, BULK	A	$ 142.42
44304CP	44 SERIES LED AUXILARY LAMP, PALLET	A	$ 135.31
44308C	LED SUPER 44 6 DIODE DOME LAMP W/HARDWIRE FLANGE	A	$ 150.31
44322R	LED SUPER 44 S/T/T 6 DIODE LAMP W/GRAY FLANGE	B	$ 50.80
44322R3	LED SUPER 44 S/T/T 6 DIODE LAMP W/GRAY FLANGE, BULK	B	$ 48.28
44326R	LED SUPER 44 S/T/T 6 DIODE LAMP W/BLACK FLANGE	B	$ 50.81
44326R3	LED SUPER 44 S/T/T 6 DIODE LAMP W/BLACK FLANGE, BULK	B	$ 48.29

44328R	LED SUPER 44 S/T/T 6 DIODE LAMP W/WHITE FLANGE	B	$ 50.81
44334R	LED SUPER 44 S/T/T , 8 & 10 GAUGE STAINLESS STEEL SNAP-IN FLANGE	B	$ 83.87
44339C	LED SUPER 44 6 DIODE DOME LAMP W/HARDWIRE FLANGE	A	$ 155.48
44339C3	LED SUPER 44 6 DIODE DOME LAMP W/HARDWIRE FLANGE, BULK	A	$ 139.93
44344C	LED SUPER 44 B/U 6 DIODE LAMP & GRAY FLANGE	A	$ 126.06
44345C	LED SUPER 44 B/U 6 DIODE LAMP & WHITE FLANGE	A	$ 126.06
44346C	LED SUPER 44 B/U 6 DIODE LAMP & BLACK FLANGE	A	$ 126.06
44347C	LED SUPER 44 B/U 6 DIODE LAMP,H/W PL3 CONNECTOR	A	$ 132.29
44348C	LED SUPER 44 B/U 6 DIODE LAMP & BLACK FLANGE H/W,BLUNT CUT	A	$ 116.20
44349C	LED SUPER 44 B/U 6 DIODE LAMP & WHITE FLANGE,H/W,BLUNT CUT	A	$ 116.20
44350C	LED SUPER 44 B/U 6 DIODE LAMP	A	$ 125.35
44350R	LED SUPER 44 S/T/T 6 DIODE LAMP HARD W/ BLUNT CUT	C	$ 63.87
44351R	LED SUPER 44 S/T/T 6 DIODE LAMP HARD W/ PL-3 ADAPTER	C	$ 67.70
44351R3	LED SUPER 44 S/T/T 6 DIODE LAMP HARD W/ PL-3 ADAPTER, BULK	C	$ 64.37
44352C	LED SUPER 44 S/T/T 6 DIODE LAMP & WHITE FLANGE, H/W	A	$ 155.51
44353R	LED SUPER 44 S/T/T 6 DIODE LAMP HARD W/ FIT 'N FORGET	C	$ 77.20
44355R	LED SUPER 44 S/T/T 6 DIODE LAMP HARD W/MALE PIN ADAPTER	C	$ 69.13
44356R	LED SUPER 44 S/T/T 6 DIODE LAMP HARD W/ BLUNT CUT WHITE FLANGE	C	$ 64.23
44359R	LED SUPER 44 S/T/T 6 DIODE LAMP HARD W/ FIT 'N FORGET WHITE FLANGE	C	$ 77.57
44360R	LED SUPER 44 S/T/T 6 DIODE LAMP HARD W/ PE CONNECTOR WHITE FLANGE	C	$ 72.03
44362R	LED SUPER 44 S/T/T 6 DIODE LAMP HARD W/ BLUNT CUT GRAY FLANGE	C	$ 64.23
44363R	LED SUPER 44 S/T/T 6 DIODE LAMP HARD W/ BLUNT CUT GRAY FLANGE	C	$ 68.10
44365R	LED SUPER 44 S/T/T 6 DIODE LAMP HARD W/ PL-3 ADAPTER GRAY FLANGE	C	$ 77.57
44367R	LED SUPER 44 S/T/T 6 DIODE LAMP HARD W/ PE CONNECTOR GRAY FLANGE	C	$ 69.53
44438C	LED 44 SERIES SURFACE MOUNT DOME LAMP WITH SWITCH	W	$ 164.40
44439C	LED 44 SERIES SURFACE MOUNT DOME LAMP FLANGE H/W	W	$ 158.13
44700	44 SERIES GROMMET COVER W/VISOR	C	$ 11.60
44701	44 SERIES GROMMET COVER	C	$ 10.73
44705	44 SERIES SS SECURITY RING	A	$ 7.80
44705-3	44 SERIES SS SECURITY RING, BULK	A	$ 7.39
44708	44 SERIES SS SECURITY RING W/MIRROR FINISH	C	$ 26.60
44709	44 SERIES SS SECURITY RING W/POWDER BLACK	C	$ 18.17
44710	SUPER 44 SECURITY GROMMET	C	$ 11.07
44808	LED 44 SERIES METAL MODULE S/T/T AND B/U W/SIDE MARKER, RH	W	$ 883.52
44809	LED 44 SERIES METAL MODULE S/T/T AND B/U W/SIDE MARKER, LH	W	$ 883.52
44871Y	LED SUPER 44 F/P/T LAMP, DIAMOND SHELL	B	$ 176.93
44877Y	LED SUPER 44 F/P/T LAMP W/GRAY FLANGE, DIAMOND SHELL	B	$ 180.50
44878Y	LED SUPER 44 F/P/T LAMP W/BLACK FLANGE, DIAMOND SHELL	B	$ 180.50
44881Y	LED SUPER 44 REAR TURN LAMP, DIAMOND SHELL	B	$ 179.37
44882R	LED SUPER 44 42 DIODE S/T/T LAMP, DIAMOND SHELL	B	$ 146.43
44883R	LED S/T/T LAMP WITH GROMMET FLANGE	W	$ 179.67
44887Y	LED SUPER 44 REAR TURN LAMP W/GRAY FLANGE, DIAMOND SHELL	B	$ 183.57
44888Y	LED SUPER 44 REAR TURN LAMP W/BLACK FLANGE, DIAMOND SHELL	B	$ 183.57
44931R	44 SERIES LED REAR FOG LAMP	W	$ 185.03
44932R	44 SERIES LED STOP/REAR LAMP	W	$ 164.83
44934Y	44 SERIES LED TURN LAMP	W	$ 146.29
44935R	44 SERIES LED REAR FOG LAMP & BLACK FLANGE	W	$ 180.63
44936R	44 SERIES LED STOP/REAR LAMP & BLACK FLANGE	W	$ 156.61
44938Y	44 SERIES LED TURN LAMP & BLACK FLANGE	W	$ 134.49
44958R	LED SUPER 44 S/T/T 6 DIODE HARD WIRED W/MALE PIN WHITE FLANGE, DIAMOND SHELL	C	$ 81.11
44960R	LED SUPER 44 S/T/T 6 DIODE HARD WIRED W/PL-3 , DIAMOND SHELL	C	$ 83.57

44972R	LED SUPER 44 S/T/T 6 DIODE HARD WIRED W/FIT 'N FORGET, DIAMOND SHELL	C	$ 93.00
44980R	LED SUPER 44 S/T/T 6 DIODE LAMP HARD WIRED W/MALE PIN WHITE FLANGE, DIAMOND SHELL	C	$ 81.11
44982R	LED S44 S/T/T 6 DIODE LAMP, DIAMOND SHELL	B	$ 62.63
44982R3	LED S44 S/T/T 6 DIODE LAMP, DIAMOND SHELL,BULK	B	$ 59.53
44983R	LED S44 S/T/T 6 DIODE LMP W/GRAY FLANGE, DIAMOND SHELL	B	$ 65.80
44986R	LED S44 S/T/T 6 DIODE LMP W/BLACK FLANGE, DIAMOND SHELL	B	$ 65.80
44988R	LED S44 S/T/T 6 DIODE LMP W/WHITE FLANGE, DIAMOND SHELL	A	$ 63.39
44990C	LED SUPER 44 B/U 6 DIODE LAMP,HARD COAT	A	$ 131.85
44991C	LED SUPER 44 B/U 6 DIODE LAMP & GRAY FLANGE, HARD COAT	A	$ 132.70
44992C	LED SUPER 44 B/U 6 DIODE LAMP & BLACK FLANGE,HARD COAT	A	$ 132.70
45	STICK-ON 2-3/16" ROUND REFLECTOR	A	$ 1.96
45-3	STICK-ON 2-3/16" ROUND REFLECTOR, BULK	A	$ 1.72
45A	STICK-ON 2-3/16" ROUND REFLECTOR	A	$ 1.96
45A-3	STICK-ON 2-3/16" ROUND REFLECTOR, BULK	A	$ 1.72
45001Y	SUPER 45 T/S LAMP KIT	B	$ 29.00
45002R	SUPER 45 S/T/T LAMP KIT	B	$ 30.03
45002Y	SUPER 45 T/S LAMP KIT	B	$ 31.13
45004	SUPER 45 B/U REFLECTORIZED	C	$ 34.77
45021Y	LLV 45 SERIES TURN/HAZARD LAMP KIT	B	$ 30.93
45021Y3	LLV 45 SERIES TURN/HAZARD LAMP KIT, BULK	B	$ 28.07
45021YP	LLV 45 SERIES TURN/HAZARD LAMP KIT, PALLET	B	$ 23.57
45024	LLV 45 SERIES REFLECTORIZED CLEAR B/U LAMP KIT	C	$ 34.50
45024-3	LLV 45 SERIES REFLECTORIZED CLEAR B/U LAMP KIT, BULK	C	$ 31.27
45024-P	LLV 45 SERIES REFLECTORIZED CLEAR B/U LAMP KIT, PALLET	C	$ 28.37
45032R	LED 45 SERIES LLV HARDWIRED KIT	C	$ 193.16
45041R	LED EUROPEAN REAR FOG LAMP KIT 10-30 VOLT	W	$ 168.48
45042R	LED EUROPEAN S/T LAMP KIT 10-30 VOLT	W	$ 163.05
45044Y	LED EUROPEAN TURN INDICATOR LAMP KIT 10-30 VOLT	W	$ 159.05
45051Y	LED 45 SERIES REAR TURN GROMMET MOUNT LAMP KIT	B	$ 255.27
45058R	LED 45 SERIES S/T/T GROMMET MOUNT LAMP KIT, 10-30 VOLT	W	$ 221.90
45063Y	LED 45 SERIES REAR TURN GROMMET MOUNT LAMP KIT, 24 VOLT, DIAMOND SHELL	B	$ 265.77
45071Y	OBSOLETE		
45071YP	OBSOLETE		
45201R	SUPER 45 T/S LAMP	D	$ 24.07
45201Y	SUPER 45 T/S LAMP	D	$ 24.07
45202R	SUPER 45 S/T/T LAMP	D	$ 24.90
45202R3	SUPER 45 S/T/T LAMP, BULK	D	$ 20.30
45202Y	SUPER 45 F/P/T LAMP	D	$ 26.17
45202Y3	SUPER 45 F/P/T LAMP, BULK	D	$ 23.67
45204	SUPER 45 REFLECTORIZED B/U LAMP KIT	D	$ 25.70
45207R	45 SERIES CENTER HIGH MOUNT STOP LAMP	B	$ 18.77
45251Y	LED 45 SERIES REAR TURN LAMP	C	$ 267.43
45258R	45 SERIES S/T/T 10-30V LAMP KIT W/GROMMET	W	$ 217.13
45259R	45 SERIES S/T/T 10-30V LAMP KIT W/FLANGE	W	$ 217.73
45263Y	LED 45 SERIES REAR TURN LAMP, 24 VOLT, DIAMOND SHELL	B	$ 261.37
45323	45 SERIES EUROPEAN APPROVED REPLACEMENT COVER AND LATCH	W	$ 56.73
45333	45 SERIES EUROPEAN APPROVED REPLACEMENT COVER AND LATCH	W	$ 11.15
45420	LED MDL 24 VOLT RH	W	$ 480.50
45421	LED 45 SERIES EUROPEAN APPROVED MODULE 10-30 VOLT LH	D	$ 585.68
45422	LED 45 SERIES EUROPEAN APPROVED MODULE 10-30 VOLT RH	D	$ 585.68
45423	LED 45 SERIES 24 VOLT LH	W	$ 480.50

45430	LED 45 SERIES EUROPEAN APPROVED MODULE 12 VOLT RH	D	$ 466.02
45433	LED 45 SERIES EUROPEAN APPROVED MODULE 12 VOLT LH	D	$ 466.02
4550	LED SIGNAL STAT S/T/T & REAR TURN, RECTANGULAR 24 DIODE PATTERN	B	$ 53.35
4550-3	LED SIGNAL STAT S/T/T & REAR TURN, RECTANGULAR 24 DIODE PATTERN, BULK	B	$ 50.69
4550A	LED SIGNAL STAT S/T/T & REAR TURN, RECTANGULAR 24 DIODE PATTERN	B	$ 53.35
4550A-3	LED SIGNAL STAT S/T/T & REAR TURN, RECTANGULAR 24 DIODE PATTERN, BULK	B	$ 50.69
4558	LED SIGNAL STAT S/T/T & R/T, RECTANGULAR 10 DIODE LAMP, RED	B	$ 44.17
4558-3	LED SIGNAL STAT S/T/T & R/T, RECTANGULAR 10 DIODE LAMP, RED, BULK	B	$ 39.77
4558A	LED SIGNAL STAT S/T/T & R/T, RECTANGULAR 10 DIODE LAMP, AMBER	B	$ 44.17
4558A-3	LED SIGNAL STAT S/T/T & R/T, RECTANGULAR 10 DIODE LAMP, AMBER, BULK	B	$ 39.77
45626	MODULE FOG LAMP 24 VOLT RH	W	$ 691.78
45627	MODULE FOG LAMP 24 VOLT LH	W	$ 691.78
45630	LED 45 SERIES EUROPEAN APPROVED MODULE 12 VOLT LH	D	$ 650.25
45631	MODULE FOG LAMP12 VOLT LH	W	$ 650.32
45700	45 SERIES AND LLV GROMMET	C	$ 5.30
45700-3	45 SERIES AND LLV GROMMET, BULK	C	$ 4.83
45701	LLV 45 SERIES GROMMET	C	$ 4.50
45701-3	LLV 45 SERIES GROMMET, BULK	C	$ 4.03
45720	45 SERIES MOUNTING BRACKET W/FLANGE	D	$ 11.90
45721	45 SERIES MOUNTING BRACKET WITHOUT FLANGE	D	$ 13.07
45740	45 SERIES MODULE, LH	D	$ 127.81
45741	45 SERIES MODULE, RH	D	$ 127.81
45742	45 SERIES MODULE W/T/S, LH	D	$ 130.84
45743	45 SERIES MODULE W/T/S, RH	D	$ 130.84
45931R	45 SERIES EUROPEAN APPROVED 10-30 VOLT FOG	D	$ 156.85
45932R	45 SERIES EUROPEAN APPROVED 10-30 VOLT S/T/T	D	$ 162.91
45933R	45 SERIES LED 10-30V REAR FOG LAMP W/ADAPTOR	W	$ 147.36
45934Y	45 SERIES EUROPEAN APPROVED 10-30 TURN	D	$ 147.43
47	STICK-ON 3-3/16" ROUND REFLECTOR	A	$ 2.13
47-3	STICK-ON 3-3/16" ROUND REFLECTOR, BULK	A	$ 1.92
47A	STICK-ON 3-3/16" ROUND REFLECTOR	A	$ 2.13
47A-3	STICK-ON 3-3/16" ROUND REFLECTOR, BULK	A	$ 1.92
47ADB	STICK-ON 3-3/16" ROUND REFLECTOR, COUNTER DISPLAY	D	$ 3.00
47DB	STICK-ON 3-3/16" ROUND REFLECTOR, COUNTER DISPLAY	D	$ 3.00
4701	DUAL FACE T/S HORIZONTAL MOUNT BULB REPLACEABLE LAMP, LH	W	$ 121.83
4702	DUAL FACE T/S HORIZONTAL MOUNT BULB REPLACEABLE LAMP, RH	W	$ 121.83
4710	DUAL FACE T/S VERTICAL MOUNT BULB REPLACEABLE LAMP	W	$ 156.73
4742	UNIVERSAL DUAL FACE T/S BULB REPLACEABLE LAMP	B	$ 72.37
4744AA	DUAL FACE TURN SIGNAL VERTICAL MOUNT YELLOW/YELLOW	D	$ 96.09
4754	UNIVERSAL DUAL FACE T/S BULB REPLACEABLE LAMP	W	$ 92.20
4800	DUAL FACE T/S VERT. MOUNT. BULB REPLACEABLE LAMP W/BLACK HSNG	D	$ 114.73
4801	DUAL FACE T/S VERT. MOUNT. BULB REPLACEABLE LAMP W/CHROME HSNG	D	$ 144.73
4805	DUAL FACE T/S VERT. MOUNT. BULB REPLACEABLE LAMP W/BLACK HSNG	W	$ 121.37
4805AAY115	DUAL FACE T/S VERT. MOUNT BULB REPLACEABLE LAMP FREIGHTLINER #681-822-0020	W	$ 97.60
4805AAY118	DUAL FACE T/S VERT. MOUNT BULB REPLACEABLE LAMP FREIGHTLINER #681-822-0120	W	$ 101.77
4805AY116	DUAL FACE T/S VERT. MOUNT. BULB REPLACEABLE LAMP W/BLK HSNG., LH	W	$ 117.07
4805AY117	DUAL FACE T/S VERT. MOUNT. BULB REPLACEABLE LAMP W/BLK HSNG., RH	W	$ 117.07
4810	DUAL FACE T/S HORZ. MOUNT. BULB REPLACEABLE LAMP W/BLACK HSNG W/O SKIRT	D	$ 115.00
4842	OBSOLETE		
4854	DUAL FACE GM T/S HORZ. MOUNT., RH, BULB REPLACEABLE LAMP	D	$ 86.37
4855	DUAL FACE GM T/S HORZ. MOUNT., LH, BULB REPLACEABLE LAMP	D	$ 86.37

4872AA	DUAL FACE GM T/S HORZ. MOUNT BULB REPLACEABLE LAMP	D	$ 81.80
4874AY101	DUAL FACE T/S VERT. MOUNT BULB REPLACEABLE LAMP	D	$ 115.20
49002R	MALE PIN 40 SERIES S/T/T KIT	A	$ 20.31
49202R	MALE PIN 40 SERIES S/T/T	A	$ 13.44
49202R3	MALE PIN 40 SERIES S/T/T , BULK	A	$ 11.34
49203C	MALE PIN 40 SERIES B/U	A	$ 12.20
49203C3	MALE PIN 40 SERIES B/U, BULK	A	$ 10.96
50	PERMIT POUCH	A	$ 14.47
5013	MULTI-FUNCTION METRI-PACK RIGHT W/ LICENSE	D	$ 100.67
50133	396" 6 CONDUCTOR MAIN CABLE	C	$ 224.67
5013K	MULTI-FUNCTION METRI-PACK LEFT W/O LICENSE HARN. 9464	D	$ 126.60
5014	MULTI-FUNCTION METRI-PACK LEFT W/O LICENSE	D	$ 100.67
5014K	MULTI-FUNCTION METRI-PACK LEFT W/O LICENSE HARN. 9464	D	$ 126.60
5014Y101	MULTI-FUNCTION METRI-PACK LEFT W/O LICENSE	W	$ 110.43
5014Y102	MULTI-FUNCTION METRI-PACK LEFT W/O LICENSE	W	$ 110.43
5015	MULTI-FUNCTION RH TWO STUD LAMP W/ TPE HSNG	C	$ 101.47
50151	612" 6 CONDUCTOR MAIN CABLE	C	$ 336.46
5015K	MULTI-FUNCTION RH TWO STUD LAMP W/ TPE HSNG. AND 9464 HARN.	W	$ 127.57
5016	MULTI-FUNCTION LH TWO STUD LAMP W/ TPE HSNG	D	$ 101.47
5016K	MULTI-FUNCTION LH TWO STUD LAMP W/ TPE HSNG. AND 9464 HARN.	W	$ 127.57
50200	72" RH S/T/T HARNESS 5 CONDUCTOR ROUND CABLE	C	$ 56.10
50201	72" LH S/T/T HARNESS 5 CONDUCTOR ROUND CABLE	C	$ 56.10
50202	156" RH S/T/T HARNESS 5 CONDUCTOR ROUND CABLE	C	$ 71.13
50203	156" LH S/T/T HARNESS 5 CONDUCTOR ROUND CABLE	C	$ 71.13
50204	72" RH 3 PLUG S/T/T HARNESS 5 CONDUCTOR ROUND CABLE	C	$ 76.33
50205	72" LH 3 PLUG S/T/T HARNESS 5 CONDUCTOR ROUND CABLE	C	$ 76.33
50208	96" RH S/T/T AND SIDE MARKER HARNESS 5 CONDUCTOR ROUND CABLE	C	$ 77.20
50209	96" LH S/T/T AND SIDE MARKER HARNESS 5 CONDUCTOR ROUND CABLE	C	$ 77.20
50210	192" RH S/T/T AND SIDE MARKER HARNESS 5 CONDUCTOR ROUND CABLE	C	$ 94.17
50211	192" LH S/T/T AND SIDE MARKER HARNESS 5 CONDUCTOR ROUND CABLE	C	$ 94.17
5023	MULTI-FUNCTION DUAL METRI-PACK RIGHT W/ LICENSE	C	$ 100.67
50230	180" RH S/T/T AND SIDE MARKER HARNESS 5 CONDUCTOR ROUND CABLE	C	$ 142.53
50231	180" RH S/T/T AND SIDE MARKER HARNESS 5 CONDUCTOR ROUND CABLE	C	$ 142.53
5023Y102	MULTI-FUNCTION DUAL METRI-PACK RIGHT W/ LICENSE	C	$ 110.43
5024	MULTI-FUNCTION DUAL METRI-PACK LEFT W/ LICENSE	C	$ 101.47
50240	72" LED RH S/T/T HARNESS 5 CONDUCTOR ROUND CABLE	C	$ 76.27
50241	72" LED LH S/T/T HARNESS 5 CONDUCTOR ROUND CABLE	C	$ 76.27
50242	96" LED RH S/T/T AND REAR MARKER HARNESS 5 CONDUCTOR ROUND CABLE	C	$ 88.97
50243	96" LED LH S/T/T AND REAR MARKER HARNESS 5 CONDUCTOR ROUND CABLE	C	$ 88.97
50250	144" LH 3 PLUG S/T/T AND BACK-UP HARNESS 5 CONDUCTOR ROUND	C	$ 88.33
50251	144" RH 3 PLUG S/T/T AND BACK-UP HARNESS 5 CONDUCTOR ROUND	C	$ 88.33
50266	456" RH T/T 1 PLUG HARNESS	C	$ 88.43
50267	456" LH T/T 1 PLUG HARNESS	C	$ 88.43
50282	96" RH ST/T, HARNESS F/MODULES	C	$ 62.57
50283	96" LH ST/T, HARNESS F/MODULES	C	$ 62.57
50300	36" 3 PLUG LOWER ID HARNESS	C	$ 30.77
50301	288" 3 PLUG UPPER ID HARNESS	C	$ 70.33
50302	240" UPPER CLEARANCE MARKER AND ID HARNESS	C	$ 79.97
50303	72" CLEARANCE MARKER HARNESS	C	$ 24.53
50304	168" CLEARANCE MARKER HARNESS	C	$ 40.67
50304-3	168" CLEARANCE MARKER HARNESS., BULK	C	$ 36.67

50305	456" CLEARANCE MARKER HARNESS	C	$ 84.80
50307	36" CLEARANCE MARKER HARNESS	C	$ 17.40
50308	36" LOWER ID AND LICENSE HARNESS	C	$ 34.87
50309	168" 2 PLUG CLEARANCE MARKER HARNESS	C	$ 54.47
50310	336" CLEARANCE MARKER HARNESS	C	$ 72.60
50319	336" CLEARANCE MARKER JUMPER HARNESS	C	$ 72.50
50321	252" CLEARANCE MARKER JUMPER HARNESS	C	$ 50.12
50322	300" CLEARANCE MARKER JUMPER HARNESS	C	$ 66.55
50324	300" 2 PLUG CLEARANCE MARKER HARNESS	C	$ 63.27
50325	180" S/T/T HARNESS	C	$ 56.73
50331	384" CLEARANCE MARKER JUMPER HARNESS	C	$ 65.93
50334	324" 3 PLUG UPPER ID HARNESS	C	$ 79.13
50335	240" UPPER ID AND LICENSE HARNESS	C	$ 72.73
50338	456" LED UPPER MARKER AND ID HARNESS	C	$ 66.10
50341	420" UPPER ID AND LICENSE HARNESS	C	$ 82.12
50342	180" RH TURN/MARKER HARNESS	C	$ 57.30
50343	180" LH TURN/MARKER HARNESS	C	$ 57.30
50344	456" RH TURN/MARKER HARNESS	C	$ 64.90
50345	456" LH TURN/MARKER HARNESS	C	$ 64.90
50350	132" CLEARANCE MARKER JUMPER HARNESS	C	$ 41.80
50351	720" CLEARANCE MARKER JUMPER HARNESS	C	$ 119.10
50356	288" CLEARANCE MARKER JUMPER HARNESS	C	$ 48.53
50357	36" LED 3 PLUG LOWER ID HARNESS	C	$ 35.13
50367	36" LED 3 PLUG LOWER ID HARNESS	C	$ 34.07
50368	288" LED 3 PLUG UPPER ID HARNESS	C	$ 76.83
50373	72" LED CLEARANCE MARKER HARNESS	C	$ 26.80
50374	168" LED CLEARANCE MARKER HARNESS	C	$ 42.43
50375	168" LED CLEARANCE MARKER HARNESS	C	$ 85.33
50376	336" LED CLEARANCE MARKER HARNESS	C	$ 68.40
50377	168" LED 2 PLUG CLEARANCE MARKER HARNESS	C	$ 44.40
50381	336" LED CLEARANCE MARKER JUMPER HARNESS	C	$ 74.10
50382	300" LED CLEARANCE MARKER JUMPER HARNESS	C	$ 73.53
50383	132" LED CLEARANCE MARKER JUMPER HARNESS	C	$ 42.77
50384	252" LED CLEARANCE MARKER JUMPER HARNESS	C	$ 87.40
50385	384" LED CLEARANCE MARKER JUMPER HARNESS	C	$ 80.33
50388	240" LED CLEARANCE MARKER, ID 5 PLUG	C	$ 95.93
50400	SURFACE MOUNT JUNCTION BOX KIT	C	$ 49.30
50400-3	SURFACE MOUNT JUNCTION BOX KIT, BULK	C	$ 46.80
50401	BUCK PLATE MOUNT ASSY	C	$ 49.30
50401-3	BUCK PLATE MOUNT ASSY, BULK	C	$ 46.80
50500	OBSOLETE		
5050DK	LED TRAILER LAMP KIT	B	$ 161.17
5051DK	LED TRAILER LAMP W/ AMBER MARKER KIT	B	$ 181.07
5052AD	LED MARKER LAMP, AMBER	B	$ 13.90
5055D	LED RH S/T/T LAMP	B	$ 63.43
5056D	LED LH S/T/T W/LICENSE LAMP	B	$ 71.80
50600	SUPER 50 12 PORT JUNCTION BOX KIT	C	$ 103.73
50601	SUPER 50 JUNCTION BOX	C	$ 23.80
50602	JUNCTION BOX HARDWIRED 12 WAY RECEPTACLE KIT	C	$ 24.70
50606	SUPER 50 JUNCTION BOX CAP W/SCREWS	C	$ 10.80
50607	REPLACEMENT LID GASKET	C	$ 12.87

50608	SUPER 50 GROUND STRAP	C	$ 0.63
50609	SUPER 50 DUAL GROUND STRAP	C	$ 5.77
5070	LED S/T/T BOX W/LICENSE LAMP	W	$ 165.83
5071	LED S/T/T BOX LAMP	W	$ 158.53
5072	LED MULTI-FUNCTION ROADSIDE W/LICENSE, PACKARD CONNECTOR	W	$ 166.67
5073	LED MULTI-FUNCTION CURBSIDE W/LICENSE, PACKARD CONNECTOR	W	$ 161.27
50776	72" 7 CONDUCTOR NOSE BOX HARNESS	W	$ 215.13
50800	SURFACE MOUNT JUNCTION BOX	C	$ 15.53
50801	BUCK PLATE MOUNT JUNCTION BOX	C	$ 15.53
50805	NOSE BOX W/O CIRCUIT BREAKERS	B	$ 108.63
50806	NOSE BOX W/15 AMP CIRCUIT BREAKERS	C	$ 194.20
50807	CABLE GROMMET	D	$ 6.20
50808	CAP LATCH REPAIR KIT	D	$ 13.03
50809	COVER	D	$ 9.57
50812	CAP-JCT BOX F/SS	C	$ 6.53
50816	JUNCTION BOX CAP	C	$ 5.80
50820	TERMINAL BLOCK	C	$ 19.00
50822	NOSE BOX RIGHT ANGLE	C	$ 125.90
50830	FILLER PLUG	C	$ 1.23
50831	ADAPTER RING	C	$ 7.53
50832	REPLACEMENT LID, GASKET & 6 SCREWS	C	$ 21.07
50840	3/8" I.D. FITTING	C	$ 7.67
50841	1/2" I.D. FITTING	C	$ 7.67
50842	3/4" I.D. FITTING	C	$ 7.67
50843	5-HOLE FITTING	C	$ 7.67
50845	JAM NUT	C	$ 1.23
50846	FITTING	C	$ 7.67
50847	FITTING	C	$ 7.67
50848	2 CONDUCTOR FLAT F/SS	C	$ 7.67
50850	HARDWARE KIT	C	$ 29.27
50860	STANDARD 7-WAY BODY, SOLID PINS	D	$ 52.17
50861	STANDARD 7-WAY BODY, SPLIT PINS	D	$ 52.17
50863	RECEPTACLE W/15 AMP CIRCUIT BREAKERS, SPLIT PINS	B	$ 108.30
50865	RECEPTACLE W/20 AMP CIRCUIT BREAKERS, SPLIT PINS	B	$ 108.30
50866	RECEPTACLE W/THREADED STACKING STUDS, SOLID PINS	B	$ 63.30
50867	RECEPTACLE W/THREADED STACKING STUDS, SPLIT PINS	B	$ 56.33
50868	7- WAY BODY,2 HOLE FLANGE, SOLID PINS	D	$ 42.20
50869	7- WAY BODY,2 HOLE FLANGE, SPLIT PINS	D	$ 44.10
50872	7- WAY BODY,PURSH-ON,2 HOLE, SPLIT PINS	D	$ 55.03
50875	COVER SERVICE KIT	D	$ 7.30
50878	Smart BOX W/SOLID PINS	C	$ 277.93
50879	Smart BOX W/SPLIT PINS	C	$ 277.93
50882	2" BOX, BOTTOM ACCESS	D	$ 37.83
50883	2" BOX, REAR ACCESS	D	$ 37.83
50885	4- WAY METAL PLUG	C	$ 19.23
50886	4- WAY RECEPTACLE	C	$ 24.67
50887	6- WAY METAL PLUG	C	$ 24.73
50888	4- WAY RECEPTACLE	C	$ 20.93
50889	"ABS" SWITCH	D	$ 75.07
50890	ANCHOR TEE FOR 1/2" TUBING	D	$ 8.20
50892	LARGE BOOT GASKET	D	$ 14.37

50895	"ABS" ACCESSORY, ANCHOR TEE FOR 3/8" TUBING	C	$ 40.47
50896	7-WAY RECEPTACLE	C	$ 35.90
50898	Smart BOX SPLIT PIN RECEPTACLE REPLACEMENT	W	$ 58.67
50899	STOPLIGHT SWITCH,12 VOLT	D	$ 35.30
50969	HARNESS ADAPTER	W	$ 233.37
51270	96" LED RH 3 PLUG S/T/T HARNESS	C	$ 152.30
51271	96" LED LH 3 PLUG S/T/T HARNESS	C	$ 152.30
51325	180" LED SINGLE STOP TAIL HARNESS	C	$ 61.10
51342	420" LED RH MID TURN/MARKER HARNESS	C	$ 60.90
51343	420" LED LH MID TURN/MARKER HARNESS	C	$ 60.90
51344	420" LED RH MID TURN/MARKER HARNESS	C	$ 60.67
51345	420" LED LH MID TURN/MARKER HARNESS	C	$ 60.67
51355	420" LH MID TURN/ MARKER HARNESS	C	$ 69.90
51356	420" RH MID TURN/MARKER HARNESS	C	$ 69.90
51375	120" MARKER/CLEARANCE HARNESS	C	$ 40.93
51409	192" LED TWO PLUG MARKER/CLEARANCE HARNESS	C	$ 48.10
52	CENTER MOUNT REFLECTOR	A	$ 1.96
52-3	CENTER MOUNT REFLECTOR, BULK	A	$ 1.72
52A	CENTER MOUNT REFLECTOR	A	$ 1.96
52A-3	CENTER MOUNT REFLECTOR, BULK	A	$ 1.72
52100	720" "ABS" POWER HARNESS	C	$ 246.90
52200	120" "'ABS" JUMPER HARNESS	C	$ 29.90
52203	96" " ABS FLAT LAMP HARNESS	C	$ 37.50
52700	1000' ROLL 7 CONDUCTOR BULK CABLE	C	$ 8,833.20
52733	396" 7 CONDUCTOR MAIN CABLE	C	$ 398.43
52751	612" 7 CONDUCTOR MAIN CABLE	C	$ 559.40
528	SUBMERSIBLE TRAILER LIGHT SLIM LINE LH	W	$ 43.70
529	SUBMERSIBLE TRAILER LIGHT SLIM LINE RH	W	$ 42.93
530DK	SUBMERSIBLE TRAILER LIGHTING KIT, SLIMLINE, DISPLAY	D	$ 175.57
5315Y101	MULTI-FUNCTION LAMP W/ METRI PACK	C	$ 88.77
5316Y101	MULTI-FUNCTION LAMP W/ METRI PACK	C	$ 80.57
533DK	TRAILER LAMP KIT, DISPLAY	D	$ 93.00
534-3	TRAILER LAMP KIT LH W/ LICENSE ILLUMINATOR, BULK	A	$ 16.73
534D	TRAILER LAMP KIT LH W/ LICENSE ILLUMINATOR, DISPLAY	A	$ 22.70
535-3	TRAILER LAMP KIT RH W/O LICENSE ILLUMINATOR, BULK	A	$ 15.23
535D	TRAILER LAMP KIT RH W/O LICENSE ILLUMINATOR, DISPLAY	A	$ 20.63
537A	OBSOLETE		
54	OVAL TWO HOLE REFLECTOR	C	$ 2.60
54-3	OVAL TWO HOLE REFLECTOR, BULK	A	$ 2.13
54A	OVAL TWO HOLE REFLECTOR, YELLOW	C	$ 2.60
54A-3	OVAL TWO HOLE REFLECTOR, YELLOW, BULK	A	$ 2.13
540	STOP/TAIL/TURN LAMP	A	$ 32.93
541	PERMASTAT UNIVERSAL MOUNT LAMP BULB REPLACEABLE W/O LICENSE, TWO STUD	A	$ 17.50
548	STOP TURN TAIL SURFACE MOUNT	W	$ 20.13
549A	STOP TURN BULB REPLACEABLE SURFACE MOUNT LAMP	D	$ 17.50
549SWD	DOME AND UTILITY LAMP BULB REPLACEABLE, DISPLAY	A	$ 22.60
550	SIGNAL-STAT THERMAL FLASHER	D	$ 19.23
552	SIGNAL-STAT THERMAL FLASHER	D	$ 15.27
552-3	SIGNAL-STAT THERMAL FLASHER, BULK	D	$ 12.20
55554	SUBMERSIBLE TRAILER LAMP KIT	D	$ 143.73
55554-1	SUBMERSIBLE TRAILER LAMP KIT, DISPLAY	D	$ 151.70

55597	ALLIED WASTE / BFI KIT	D	$ 1,330.52
55598	ALLIED WASTE / BFI KIT	D	$ 961.54
55626	POP DISPLAY BOX KIT	W	$ 107.73
55627	T/L LABEL FOR 55626 DISPLAY	W	$ 17.90
55628	PLAN-O-GRAM LABEL	W	$ 18.67
55629	55626 DISPLAY WITH STICKERS	W	$ 149.57
55630	55626 DISPLAY W/LABEL & LIGHTS	W	$ 4,762.62
55653	SHOP CABINET, KIT	W	$ 1,774.90
56648	OBSOLETE		
56649	OBSOLETE		
57	CENTER MOUNT REFLECTOR 4"	A	$ 4.23
57-3	CENTER MOUNT REFLECTOR 4",BULK	A	$ 4.06
57A	CENTER MOUNT REFLECTOR 4"	A	$ 4.23
57A-3	CENTER MOUNT REFLECTOR 4",BULK	A	$ 4.06
5800AA	QUAD MOUNT 5800 SER COMBO DOUBLE FACE F/T/S LAMP	D	$ 85.87
5800AAK	QUAD MOUNT 5800 SER COMBO DOUBLE FACE F/T/S LAMP	D	$ 107.57
60001R	SUPER 60 T/S LAMP KIT	C	$ 28.13
60001Y	SUPER 60 T/S LAMP KIT	C	$ 28.13
60002R	SUPER 60 S/T/T LAMP KIT	A	$ 23.99
60002R3	SUPER 60 S/T/T LAMP KIT, BULK	A	$ 20.58
60002RP	SUPER 60 S/T/T LAMP KIT, PALLET	A	$ 19.42
60002Y	SUPER 60 T/S LAMP KIT	A	$ 23.99
60002Y3	SUPER 60 T/S LAMP KIT, BULK	A	$ 20.58
60004C	SUPER 60 SERIES CLEAR LAMP KIT	A	$ 23.64
60007R	SUPER 60 S/T/T LAMP KIT, 24 VOLT	C	$ 39.47
60007Y	SUPER 60 T/S LAMP KIT, 24 VOLT	C	$ 39.47
60013R	60 SERIES CHMSL LAMP KIT	B	$ 23.43
60015R	60 SERIES SIDE TURN INDICATOR LAMP KIT	D	$ 32.30
60015Y	60 SERIES SIDE TURN INDICATOR LAMP KIT	A	$ 25.70
60015Y3	60 SERIES SIDE TURN INDICATOR LAMP KIT, BULK	A	$ 22.85
60021R	LLV 60 SERIES CHMSL LAMP KIT	B	$ 28.47
60021R3	LLV 60 SERIES CHMSL LAMP KIT, BULK	B	$ 27.30
60021RP	LLV 60 SERIES CHMSL LAMP KIT, PALLET	B	$ 22.97
60022Y	LLV 60 SERIES P/T LAMP KIT	B	$ 34.00
60022Y3	LLV 60 SERIES P/T LAMP KIT, BULK	B	$ 29.90
60022YP	LLV 60 SERIES P/T LAMP KIT, PALLET	B	$ 26.87
60023R	LLV 60 SERIES REFLECTORIZED REAR S/M LAMP KIT	C	$ 33.90
60023R3	LLV 60 SERIES REFLECTORIZED REAR S/M LAMP KIT, BULK	C	$ 30.70
60023RP	LLV 60 SERIES REFLECTORIZED REAR S/M LAMP KIT, PALLET	C	$ 25.90
60024Y	LLV 60 SERIES REFLECTORIZED FRONT S/M, TURN SIGNAL LAMP KIT	B	$ 32.73
60024Y3	LLV 60 SERIES REFLECTORIZED FRONT S/M, TURN SIGNAL LAMP KIT, BULK	B	$ 30.97
60024YP	LLV 60 SERIES REFLECTORIZED FRONT S/M, TURN SIGNAL LAMP KIT, PALLET	B	$ 27.87
60050R	LED 60 SERIES S/T/T GROMMET KIT	B	$ 99.60
60050R3	LED 60 SERIES S/T/T GROMMET KIT, BULK	B	$ 94.00
60052R	LED 60 SERIES S/T/T GRAY FLANGE KIT	B	$ 98.97
60056R	LED 60 SERIES S/T/T BLACK FLANGE KIT	C	$ 116.23
60060R	LED 60 SERIES LONG LIFE VEHICLE CHMSL GROMMET KIT	C	$ 159.23
60060R3	LED 60 SERIES LONG LIFE VEHICLE CHMSL GROMMET KIT, BULK	C	$ 145.70
60060RP	LED 60 SERIES LONG LIFE VEHICLE CHMSL GROMMET KIT, PALLET	C	$ 133.07
60061R	LED 60 SERIES HIGH MOUNTED STOP LAMP GROMMET KITS	C	$ 155.57
60062R	LED 60 SERIES HIGH MOUNTED STOP LAMP GRAY FLANGE KITS	C	$ 150.63

60072Y	LED 60 SERIES AUXILIARY /TURN GRAY FLANGE KITS	C	$ 134.97
60074Y	LLV 60 SERIES LED SIDE LAMP	W	$ 149.87
60075Y	LED MDL AUXILIARY T/TURN GROMMET MOUNT KIT	C	$ 122.63
60080Y	LED 60 SERIES AUXILIARY /TURN SEQUENTIAL ARROW KIT	C	$ 201.33
60082Y	LED 60 SERIES AUXILIARY /TURN SEQUENTIAL ARROW FLANGE KIT	C	$ 201.33
60083R	60 SERIES ECONOMY S/T/T LAMP KIT	A	$ 21.03
60083Y	60 SERIES ECONOMY T/S LAMP KIT	A	$ 21.03
60085R	LED 60 SERIES S/T/T GROMMET KIT, DIAMOND SHELL	C	$ 130.20
60092C	60 SERIES ECONOMY CLEAR LAMP KIT	A	$ 20.72
60094Y	LED 60 SERIES F/P/T GROMMET KIT	B	$ 177.70
60096Y	LED 60 SERIES F/P/T GRAY FLANGE KIT	B	$ 175.47
60097Y	LED 60 SERIES F/P/T BLACK FLANGE KIT	B	$ 175.47
60115Y	LED SUPER 60 SIDE T/S AND MARKER GROMMET KITS	A	$ 237.06
60117Y	LED SUPER 60 SIDE T/S AND MARKER FLANGE KITS	B	$ 235.19
60120R	LED 60 SERIES STROBE, GROMMET MOUNT KIT	B	$ 173.33
60120Y	LED 60 SERIES STROBE, GROMMET MOUNT KIT W/METALIZED REFLECTOR	B	$ 151.71
60122R	LED 60 SERIES STROBE, GROMMET MOUNT KIT	B	$ 171.13
60122Y	LED 60 SERIES STROBE, GROMMET MOUNT KIT W/NON-METALIZED REFLECTOR	B	$ 155.20
60124R	LED 60 SERIES STROBE, FLANGE MOUNT KIT	B	$ 175.57
60124Y	LED 60 SERIES STROBE, FLANGE MOUNT KIT W/METALIZED REFLECTOR	B	$ 159.67
60126R	LED 60 SERIES STROBE, FLANGE MOUNT KIT	B	$ 173.23
60126Y	LED 60 SERIES STROBE, FLANGE MOUNT KIT W/NON-METALIZED REFLECTOR	B	$ 157.40
60180R	LLV 60 SERIES LED SIDE LAMP	W	$ 92.63
60180Y	LLV 60 SERIES LED F/P/T LAMP	W	$ 92.63
60201R	SUPER 60 TURN SIGNAL LAMP	C	$ 18.87
60201R3	SUPER 60 TURN SIGNAL LAMP, BULK	D	$ 17.10
60201Y	SUPER 60 TURN SIGNAL LAMP	C	$ 18.87
60201Y3	SUPER 60 TURN SIGNAL LAMP, BULK	D	$ 17.10
60202R	SUPER 60 S/T/T LAMP	A	$ 15.70
60202R3	SUPER 60 S/T/T LAMP, BULK	A	$ 12.82
60202RP	SUPER 60 S/T/T LAMP, PALLET	A	$ 11.91
60202Y	SUPER 60 T/S LAMP	A	$ 15.70
60202Y3	SUPER 60 T/S LAMP, BULK	A	$ 12.82
60202YP	SUPER 60 T/S LAMP, PALLET	A	$ 11.91
60204C	60 SERIES B/U LAMP	B	$ 16.57
60204C3	60 SERIES B/U LAMP, BULK	B	$ 15.03
60207R	SUPER 60 S/T/T LAMP, 24 VOLT	D	$ 29.83
60207Y	SUPER 60 TURN SIGNAL LAMP, 24 VOLT	D	$ 29.83
60213R	60 SERIES CHMSL LAMP	B	$ 15.43
60215R	60 SERIES SIDE TURN INDICATOR	C	$ 22.40
60215R3	60 SERIES SIDE TURN INDICATOR, BULK	D	$ 20.30
60215Y	60 SERIES SIDE TURN INDICATOR	A	$ 17.36
60215Y3	60 SERIES SIDE TURN INDICATOR, BULK	A	$ 14.18
60215YP	60 SERIES SIDE TURN INDICATOR, PALLET	A	$ 12.72
60217Y	60 SERIES SIDE TURN INDICATOR, 24 VOLT	C	$ 43.00
60250R	LED 60 SERIES S/T/T LAMP	B	$ 77.35
60250R3	LED 60 SERIES S/T/T LAMP , BULK	B	$ 73.50
60252R	LED 60 SERIES S/T/T LAMP W/FLANGE	B	$ 90.63
60252R3	LED 60 SERIES S/T/T LAMP W/FLANGE, BULK	B	$ 86.13
60253R	LED 60 SERIES S/T/T LAMP, 24 VOLT	C	$ 172.27
60255Y	LED 60 SERIES AUX/MID-TURN LAMP, 24 VOLT	C	$ 161.30

60256R	LED 60 SERIES S/T/T LAMP W/BLACK FLANGE	B	$ 100.70
60260R	LED 60 SERIES HIGH MOUNTED STOP LAMP	B	$ 129.90
60262R	LED 60 SERIES HIGH MOUNTED STOP LAMP W/GRAY FLANGE	C	$ 143.17
60264R	LED 60 SERIES S/T/T LAMP, DIAMOND SHELL, 24 VOLT	C	$ 181.80
60266R	LED 60 SERIES HIGH MOUNTED STOP LAMP W/BLACK FLANGE	C	$ 115.40
60272Y	LED 60 SERIES AUXILIARY /TURN LAMPS W/GRAY FLANGE	C	$ 121.47
60275Y	LED 60 SERIES AUXILIARY /TURN LAMPS	B	$ 97.91
60276Y	LED 60 SERIES AUXILIARY /TURN LAMP AND BLACK FLANGE	C	$ 119.47
60280Y	LED 60 SERIES AUXILIARY /TURN SEQUENTIAL ARROW LAMP	C	$ 187.60
60282Y	LED 60 SERIES AUXILIARY /TURN SEQUENTIAL ARROW LAMP W/GRAY FLANGE KIT	C	$ 192.47
60283R	60 SERIES ECONOMY LAMP	A	$ 12.96
60283R3	60 SERIES ECONOMY LAMP, BULK	A	$ 11.68
60283Y	60 SERIES ECONOMY LAMP	A	$ 12.96
60283Y3	60 SERIES ECONOMY LAMP, BULK	A	$ 11.68
60284C	60 SERIES ECONOMY LAMP	A	$ 12.96
60284C3	60 SERIES ECONOMY LAMP, BULK	A	$ 11.68
60286Y	LED 60 SERIES AUXILIARY /TURN SEQUENTIAL ARROW LAMP W/ BLK FLANGE KIT	C	$ 176.90
60290Y	LED 60 SERIES F/P/T LAMP	B	$ 164.77
60291Y	LED 60 SERIES F/P/T LAMP W/FLANGE	B	$ 167.20
60292Y	LED 60 SERIES F/P/T LAMP W/BLACK FLANGE	B	$ 167.20
60298Y	LED 60 SERIES F/P/T LAMP W/ INTEGRALL FLANGE 24 VOLT	D	$ 175.20
60302R	60 SERIES BULB REPLACEABLE S/T/T LAMP KIT	C	$ 23.10
60302Y	60 SERIES BULB REPLACEABLE T/S LAMP KIT	D	$ 23.10
60303R	60 SERIES BULB REPLACEABLE CHMSL LAMP KIT	B	$ 15.73
60315Y	LED SUPER 60 SIDE T/S AND MARKER LAMPS	A	$ 145.01
60317Y	LED SUPER 60 SIDE T/S AND MARKER LAMPS W/YELLOW FLANGE	A	$ 144.53
60324R	60 SERIES BULB REPLACEABLE CHMSL KIT	B	$ 20.43
60340R	60 SERIES BULB REPLACEABLE S/T/T W/SOCKET	B	$ 25.77
60340Y	60 SERIES BULB REPLACEABLE S/T/T W/SOCKET	B	$ 25.73
60344R	60 SERIES BULB REPLACEABLE S/T W/SOCKET	B	$ 24.20
60344Y	60 SERIES BULB REPLACEABLE S/T W/SOCKET	B	$ 24.20
60345C	60 SERIES CLEAR LAMP	A	$ 23.23
60354C	60 SERIES LED LOAD LIGHT LAMP, CLEAR	W	$ 175.67
60356R	LED 60 SERIES S/T/T 12V	W	$ 64.00
60360R	LED 60 SERIES STROBE W/ NON-METALIZED REFLECTOR LAMP	B	$ 150.00
60360Y	LED 60 SERIES STROBE W/ NON-METALIZED REFLECTOR LAMP	B	$ 134.90
60362R	LED 60 SERIES STROBE W/METALIZED REFLECTOR LAMP	B	$ 160.13
60362Y	LED 60 SERIES STROBE W/METALIZED REFLECTOR LAMP	B	$ 144.30
60364R	LED 60 SERIES STROBE W/METALIZED REFLECTOR LAMP AND FLANGE	B	$ 164.07
60364Y	LED 60 SERIES STROBE W/METALIZED REFLECTOR LAMP AND FLANGE	B	$ 148.30
60366R	LED 60 SERIES STROBE W/ NON-METALIZED REFLECTOR LAMP AND FLANGE	B	$ 161.93
60366Y	LED 60 SERIES STROBE W/ NON-METALIZED REFLECTOR LAMP AND FLANGE	B	$ 146.03
60403	60 SERIES GROMMET	B	$ 9.27
60420Y	INTEGRAL FLANGE, FIT 'N FORGET	B	$ 136.57
60421Y	GROMMET MOUNT, FIT 'N FORGET	B	$ 133.13
60422Y	GROMMET MOUNT, HARD-WIRED, BLUNT CUT	B	$ 171.93
60423Y	INTEGRAL FLANGE, HARD-WIRED, BLUNT-CUT	B	$ 174.87
60424R	SURFACE MOUNT, HARD WIRED, .180 BULLET	B	$ 163.47
60424Y	SURFACE MOUNT, HARD WIRED, .180 BULLET	B	$ 186.83
60425Y	SURFACE MOUNT, HARD-WIRED, BLUNT-CUT	B	$ 179.87
6050	LED SIGNAL STAT S/T/T 60 SERIES OVAL SEALED LAMP	B	$ 52.16

6050-3	LED SIGNAL STAT S/T/T 60 SERIES OVAL SEALED LAMP, BULK	B	$ 49.03
6050A	LED SIGNAL STAT REAR TURN 60 SERIES OVAL SEALED LAMP	B	$ 52.16
6050A-3	LED SIGNAL STAT REAR TURN 60 SERIES OVAL SEALED LAMP, BULK	B	$ 49.03
60-50121	TWIST-LOCK 50 WATT BULB	D	$ 72.67
60-50123	SNAP-IN 35 WATT BULB	D	$ 57.33
60-50124	SNAP-IN 35 WATT BULB	D	$ 58.50
6051	LED SIGNAL STAT S/T/T 60 SERIES OVAL SEALED LAMP CLEAR LENS	D	$ 55.59
6051-3	LED SIGNAL STAT S/T/T 60 SERIES OVAL SEALED LAMP CLEAR LENS, BULK	D	$ 52.26
6051A	LED SIGNAL STAT S/T/T 60 SERIES OVAL SEALED LAMP CLEAR LENS	D	$ 55.59
6051A-3	LED SIGNAL STAT S/T/T 60 SERIES OVAL SEALED LAMP CLEAR LENS, BULK	D	$ 52.26
6053	LED SIGNAL STAT S/T/T 60© SERIES OVAL LAMP W/ INT FLANGE, RED	B	$ 55.77
6053-3	LED SIGNAL STAT S/T/T 60© SERIES OVAL LAMP W/ INT FLANGE, RED, BULK	B	$ 52.97
6053A	LED SIGNAL STAT F/P/T 60© SERIES OVAL LAMP W/ INT FLANGE, AMBER	B	$ 55.77
6053A-3	LED SIGNAL STAT F/P/T 60© SERIES OVAL LAMP W/ INT FLANGE, AMBER, BULK	B	$ 52.97
60550R	LED 60 SERIES S/T/T & BU COMBO, BLK FLANGE MOUNT, HW	B	$ 173.83
60551R	LED 60 SERIES S/T/T & BU COMBO, GREY FLANGE, HW	B	$ 173.83
60552R	LED 60 SERIES S/T/T & BU COMBO, BLK FLANGE, AMP CONNECTOR	B	$ 135.17
60553R	LED 60 SERIES S/T/T & BU COMBO, GREY FLANGE, AMP CONNECTOR	B	$ 135.17
60554R	LED 60 SERIES S/T/T & BU COMBO, SURFACE MOUNT, HW AMP CONNECTOR	B	$ 173.83
60555R	LED 60 SERIES S/T/T & BU COMBO, SURFACE MOUNT, AMP CONNECTOR	B	$ 135.17
60556R	LED 60 SERIES S/T/T & BU COMBO, GROMMET, HW	B	$ 173.83
60557R	LED 60 SERIES S/T/T & BU COMBO, GROMMENT, AMP CONNECTOR	B	$ 135.17
60558R	LED 60 SERIES REFLECTOR, FLANGE MOUNT, RETROFIT	B	$ 26.67
60559R	LED 60 SERIES S/T/T & BU COMBO, FLANGE MOUNT, HW AMP CONNECTOR	B	$ 173.83
6058	LED SIGNAL STAT S/T/T 60© SERIES OVAL 10 DIODE LAMP, RED	B	$ 47.17
6058-3	LED SIGNAL STAT S/T/T 60© SERIES OVAL 10 DIODE LAMP, RED, BULK	B	$ 42.47
6058A	LED SIGNAL STAT F/P/T 60© SERIES OVAL 10 DIODE LAMP, AMBER	B	$ 47.17
6058A-3	LED SIGNAL STAT F/P/T 60© SERIES OVAL 10 DIODE LAMP, AMBER, BULK	B	$ 42.47
6060C	LED SIGNAL STAT 60 SERIES B/U	B	$ 122.06
6060C-3	LED SIGNAL STAT 60 SERIES B/U, BULK	B	$ 115.94
6063C	LED SIGNAL STAT 60© SERIES BACK-UP LAMP W/ INT FLANGE, CLEAR	B	$ 140.33
6063C-3	LED SIGNAL STAT 60© SERIES BACK-UP LAMP W/ INT FLANGE, CLEAR, BULK	B	$ 133.33
60700	60 SERIES GROMMET	A	$ 5.04
60700-3	60 SERIES GROMMET, BULK	A	$ 3.99
60701	LLV 60 SERIES GROMMET	D	$ 5.63
60703	60 SERIES GROMMET COVER	B	$ 10.83
60704	60 SERIES CLOSED BACK GROMMET	A	$ 5.27
60705	60 SERIES GROMMET COVER W/VISOR	C	$ 12.53
60708	60 SERIES THERMAL PLASTIC RUBBER GROMMET	C	$ 8.90
60709	OBSOLETE		
60718	60 SERIES UnPOLISHED SS FLANGE MOUNTING COVER	C	$ 10.17
60719	60 SERIES SS FLANGE MOUNTING COVER	C	$ 11.67
60719-3	60 SERIES SS FLANGE MOUNTING COVER, BULK	C	$ 10.50
60720	60 SERIES STEEL MOUNTING BRACKET	A	$ 12.37
60720-3	60 SERIES STEEL MOUNTING BRACKET, BULK	A	$ 11.13
60722	60 SERIES STEEL MOUNTING BRACKET	D	$ 14.90
60722-3	60 SERIES STEEL MOUNTING BRACKET, BULK	D	$ 13.47
60723	60 SERIES ALUMINUM MOUNTING BRACKET	D	$ 24.07
60724	60 SERIES ALUMINUM MOUNTING BRACKET	D	$ 24.07
60728	60 SERIES MOUNTING BRACKET	D	$ 12.70
60729	60 SERIES BRACKET	D	$ 26.37

60730	60 SERIES FLANGE MOUNT	D	$ 39.03
60731	60 SERIES StANDOFf MOUNT	D	$ 50.37
60733	60 SERIES BRACKET W/ NOTCHED FLANGE	D	$ 15.30
60737	60 SERIES BRACKET , TWO LAMP	B	$ 57.13
60738	60 SERIES BRACKET, THREE LAMP	B	$ 72.30
60789	60 SERIES HSNG ASSEMBLY	W	$ 12.44
60802Y	OBSOLETE		
60872Y	LED 60 SERIES AUXILIARY /TURN LAMPS W/GRAY FLANGE, DIAMOND SHELL	B	$ 138.00
60885R	LED 60 SERIES S/T/T LAMP, DIAMOND SHELL	B	$ 109.23
60891Y	LED 60 SERIES AUXILIARY /TURN LAMPS, DIAMOND SHELL	B	$ 127.97
60892Y	LED 60 SERIES S/T/T LAMP, DIAMOND SHELL	C	$ 176.70
610W	3" X 5" HALOGEN WORK LAMP	C	$ 55.07
612W	3" X "5 HEAVY DUTY HALOGEN FOG LAMP, DISPLAY	W	$ 59.17
613W	3" X "5 HEAVY DUTY HALOGEN DRIVING LAMP, DISPLAY	W	$ 73.23
620H	MULTI-PURPOSE 5" HOUSING	C	$ 35.13
620W	MULTI-PURPOSE 5" LAMP	A	$ 44.13
620W-3	MULTI-PURPOSE 5" LAMP, BULK	A	$ 39.77
620W-4	MULTI-PURPOSE 5" LAMP, 24 VOLT	D	$ 58.27
627WD	4" X 6" HALOGEN WORK LIGHT TRAPEZOID, DISPLAY	D	$ 67.53
628WD	4" X 6" HALOGEN WORK LIGHT SPOT, DISPLAY	D	$ 71.17
629WD	4" X 6" HALOGEN WORK LIGHT FLOOD, DISPLAY	D	$ 67.53
630H	HSNG. FOR CLEAR WORK LAMP	C	$ 61.70
630W	CLEAR WORK LAMP	D	$ 79.30
630W-3	CLEAR WORK LAMP, BULK	D	$ 75.30
630W-4	CLEAR WORK LAMP, 24 VOLT	D	$ 116.93
631W	CLEAR FOG LAMP	D	$ 90.87
632W	CLEAR HALOGEN FLOOD LAMP	D	$ 108.90
633W	CLEAR HALOGEN WORK LAMP	D	$ 108.90
640W	OBSOLETE		
6500	COMBO 7" BULB REPL.	C	$ 75.70
6500A	COMBO 7" BULB REPL.	C	$ 75.70
6501	COMBO 7" BULB REPL.	C	$ 89.70
6501A	COMBO 7" BULB REPL.	C	$ 89.70
6502	COMBO 7" BULB REPL.	C	$ 79.73
6503	ARROW T/S 7" BULB REPLACEABLE	C	$ 61.70
6503A	ARROW T/S 7" BULB REPLACEABLE	C	$ 61.70
6600A	LOW PROFILE STROBE LIGHT	D	$ 266.40
6600MA	LOW PROFILE STROBE LIGHT	D	$ 339.67
6600W	LOW PROFILE STROBE LIGHT	W	$ 266.83
6601A	MEDIUM PROFILE STROBE LIGHT PERMANENT MOUNT	D	$ 272.13
6601MA	MEDIUM PROFILE STROBE LIGHT PERMANENT MOUNT	D	$ 344.43
6602PS	POWER SUPPLY	D	$ 483.77
66050R	LED SUPER 66 SINGLE DIODE LAMP KIT	B	$ 78.63
66054R	LED SUPER 66 SINGLE DIODE WHITE FLANGE KIT	B	$ 74.43
66056R	LED SUPER 66 SINGLE DIODE BLACK FLANGE KIT	B	$ 74.43
66082R	LED SUPER 66 SINGLE DIODE GRAY FLANGE KIT, DIAMOND SHELL	B	$ 91.40
66085R	LED SUPER 66 SINGLE DIODE LAMP KIT, DIAMOND SHELL	B	$ 95.63
66205C	LED SUPPER 66 SINGLE DIODE B/U LAMP	B	$ 145.27
66206C	LED SUPPER 66 SINGLE DIODE B/U LAMP AND FLANGE	B	$ 145.97
66250R	LED SUPER 66 SINGLE DIODE LAMP KIT	B	$ 65.70
66252R	LED SUPER 66 SINGLE DIODE LAMP AND GRAY FLANGE	B	$ 66.10

66254R	LED SUPER 66 SINGLE DIODE LAMP AND WHITE FLANGE	B	$ 66.10
66256R	LED SUPER 66 SINGLE DIODE LAMP AND BLACK FLANGE	B	$ 66.10
6660PS	POWER SUPPLY	D	$ 939.20
66882R	LED SUPER 66 SINGLE DIODE LAMP AND GRY FLANGE, DIAMOND SHELL	B	$ 83.07
66885R	LED SUPER 66 SINGLE DIODE LAMP KIT, DIAMOND SHELL	B	$ 82.70
6810A	LOW PROFILE STROBE LIGHT	D	$ 591.17
6811A	MEDIUM PROFILE STROBE LIGHT YELLOW	D	$ 595.23
6811MA	MEDIUM PROFILE STROBE LIGHT YELLOW	D	$ 591.70
6822A	LMP-BEACON, AMB, PERM MOUNT, 12V	W	$ 80.23
6823A	LMP-BEACON, AMB, MAG MOUNT, 12V	W	$ 110.53
6859A	360 DEGREE REMOTE STROBE HEAD	D	$ 276.43
69003C	MALE PIN MDL60 BACK- UP, KIT	A	$ 22.99
69202Y	MALE PIN 60 SERIES SIDE TURN & M/C	A	$ 15.43
69202Y3	MALE PIN 60 SERIES SIDE TURN & M/C, BULK	A	$ 13.88
69203C	MALE PIN 60 SERIES SIDE BACK-UP	A	$ 13.88
69203C3	MALE PIN 60 SERIES SIDE BACK-UP, BULK	A	$ 12.51
70300	70 SERIES PEDESTAL T/S	B	$ 43.03
70310R	70 SERIES BULB REPLACEABLE PEDESTAL S/T/T PARK LAMP	D	$ 27.97
70311	70 SERIES BULB REPLACEABLE PEDESTAL S/T/T PARK LAMP	A	$ 30.57
70330R	70 SERIES PEDESTAL T/S LAMP	D	$ 26.43
70330Y	70 SERIES PEDESTAL T/S LAMP	D	$ 26.43
70352	70 SERIES T/S LAMP, LH, CHROME	D	$ 108.10
70353	70 SERIES T/S LAMP, RH, CHROME	D	$ 108.10
70356	70 SERIES DOUBLE FACE T/S LH, BLACK	B	$ 79.83
70357	70 SERIES DOUBLE FACE T/S RH, BLACK	C	$ 86.70
7038	STICK-ON CONVEX MIRROR 2" ROUND	A	$ 3.13
7039	STICK-ON CONVEX MIRROR 3" ROUND	A	$ 3.33
7044	STICK-ON CONVEX MIRROR 3" ROUND	B	$ 4.27
7044-3	STICK-ON CONVEX MIRROR 3" ROUND, BULK	B	$ 3.47
7044DB	STICK-ON CONVEX MIRROR 3" ROUND, COUNTER DISPLAY	C	$ 4.00
7048	STICK-ON CONVEX MIRROR 4"X 5" RECTANGULAR	B	$ 6.83
7048DB	STICK-ON CONVEX MIRROR 4"X 5" RECTANGULAR, COUNTER DISPLAY	C	$ 6.33
7217	FORD TRUCK AND VAN MIRRORS LH, SS	D	$ 107.60
7218	FORD TRUCK AND VAN MIRRORS RH, SS	D	$ 107.60
7223	FORD TRUCK AND VAN MIRROR HEAD RH	D	$ 44.57
7224	FORD TRUCK AND VAN MIRROR HEAD LH	D	$ 44.57
7268	UNIVERSAL TRUCK AND VAN MIRROR HEAD, BLACK	D	$ 37.80
7269	UNIVERSAL TRUCK AND VAN MIRROR HEAD, CHROME	D	$ 41.70
7450	TUBE MOUNT MIRROR	D	$ 25.67
7460	TUBE MOUNT MIRROR	D	$ 42.43
7555	UNIVERSAL TRUCK AND VAN MIRROR, BLACK	D	$ 62.00
7575	CHEVY/GMC STYLE TRUCK AND VAN MIRROR, UNIVERSAL	D	$ 125.87
7618	REAR VIEW MIRROR	D	$ 63.03
7619	REAR VIEW MIRROR	D	$ 61.07
77825	HEAVY DUTY CRIMPING TOOL	C	$ 340.33
794	TRIANGLE FLARE REPLACEMENT BOX	W	$ 25.97
797	SMALL ECONOMY EMBLEM	D	$ 32.33
7973D	TOW MIRROR EXTENDER KIT	D	$ 38.80
798	TRIANGLE FLARE KIT	A	$ 63.77
798-3	TRIANGLE FLARE KIT, BULK	A	$ 56.03
799	INDIVIDUAL TRIANGLE	W	$ 33.77

8006	LENS-S/T REPLACEMENT 6684	W	$ 8.27
8007	LENS-B/U,REPLACEMENT-83692	W	$ 5.90
8008	LENS-TURN,REPLACEMENT-83693	W	$ 6.60
8013	LED LAMP-12V-24V, INTERIOR	W	$ 573.80
80162C	LED LAMP - 12V DOME, BLUNT CUT	C	$ 100.77
80163C	LED DOME LAMP, 12V W/CONN	W	$ 98.86
80164C	LED LAMP - 12V DOME, W/.180 BULLET	C	$ 101.60
80200	MULTI PURPOSE CLEAR REPLACEMENT BEAM	W	$ 32.13
80202	RUBBER SPOT CLEAR REPLACEMENT BEAM	W	$ 50.57
80203	RUBBER TRACTOR CLEAR REPLACEMENT BEAM	W	$ 51.67
80205	WIDE FLOOD REPLACEMENT BEAM	W	$ 67.77
80206	TRAPEZOID REPLACEMENT BEAM	W	$ 67.77
80220	LED PAR 36 LAMP 9-36V	W	$ 190.83
80240	LED PAR 36 LAMP 9-36V	W	$ 190.83
80250C	LED 80 SERIES INTERIOR DOME LAMP	A	$ 616.99
80250C3	LED 80 SERIES INTERIOR DOME LAMP, BULK	A	$ 586.14
80251C	LED 80 SERIES INTERIOR DOME LAMP 12V	A	$ 423.15
80251C3	LED 80 SERIES INTERIOR DOME LAMP 12V, BULK	A	$ 402.01
80253C	LED DOME, 12V, 180 BULLETS	A	$ 425.33
80255C	LED DOME,12V,MOTION SENSOR	A	$ 581.52
80255C3	LED DOME,12V,MOTION SENSOR, BULK	A	$ 552.44
80275	LED AUXILIARY LAMP PAR 36 9-15 VOLT	W	$ 283.57
80275-3	LED AUXILIARY LAMP PAR 36 9-15 VOLT, BULK	W	$ 269.40
80275-P	LED AUXILIARY LAMP PAR 36 9-15 VOLT, PALLET	W	$ 255.93
80302R	80 SERIES BULB REPLACEABLE S/T/T LAMP	B	$ 17.97
80302R3	80 SERIES BULB REPLACEABLE S/T/T LAMP, BULK	B	$ 16.17
80302RP	80 SERIES BULB REPLACEABLE S/T/T LAMP, PALLET	B	$ 14.50
80302Y	80 SERIES BULB REPLACEABLE T/S LAMP	D	$ 17.03
80304	80 SERIES BULB REPLACEABLE B/ULAMP	D	$ 15.63
80322R	80 SERIES 7-IN-1 COMBO LAMP W/O LIC. PLATE WINDOW	D	$ 38.10
80324R	80 SERIES 7-IN-1 COMBO LAMP	D	$ 48.00
80334R	80 SERIES S/T/T LAMP W/BLK HSNG.	B	$ 21.13
80334R3	80 SERIES S/T/T LAMP W/BLK HSNG., BULK	B	$ 19.03
80335R	80 SERIES S/T/T LAMP W/SS HSNG.	C	$ 25.63
80336R	80 SERIES S/T/T LAMP W/POLISHED SS HSNG.	D	$ 39.40
80339R	80 SERIES BULB REPLACEABLE S/T/T LAMP W/RUBBER HSNG.	D	$ 35.77
80340	80 SERIES UNIVERSAL BULB REPLACEABLE B/U LAMP KIT	D	$ 26.80
80342	80 SERIES BULB REPL. B/U LAMP	D	$ 18.97
80344	80 SERIES BULB REPL. B/U LAMP	D	$ 27.80
80344-3	80 SERIES BULB REPL. B/U LAMP, BULK	D	$ 25.27
80345	80 SERIES BULB REPLACEABLE B/U SS HSNG	D	$ 40.47
80350	80 SERIES BULB REPL. DOME LAMP W/SWITCH, CHROME	A	$ 32.77
80350-3	80 SERIES BULB REPL. DOME LAMP W/SWITCH, CHROME, BULK	A	$ 29.60
80351	80 SERIES BULB REPL. DOME LAMP, CHROME	B	$ 31.70
80351-3	80 SERIES BULB REPL. DOME LAMP, CHROME, BULK	B	$ 28.73
80352	80 SERIES BULB REPLACEABLE DOME LAMP W/SWITCH	D	$ 35.13
80353	80 SERIES BULB REPLACEABLE DOME LAMP	D	$ 31.00
80354	80 SERIES BULB REPLACEABLE 7" DOME LAMP W/SWITCH, CHROME	C	$ 61.37
80354-3	80 SERIES BULB REPLACEABLE 7" DOME LAMP W/SWITCH, CHROME, BULK	C	$ 55.57
80355	80 SERIES BULB REPLACEABLE 7" DOME LAMP, CHROME	C	$ 59.23
80355-3	80 SERIES BULB REPLACEABLE 7" DOME LAMP, CHROME, BULK	C	$ 53.53

80356	80 SERIES BULB REPLACEABLE 7" DOME LAMP W/SWITCH	C	$ 49.20
80357	80 SERIES BULB REPLACEABLE 7" DOME LAMP	C	$ 42.30
80360	5" MULTI PURPOSE LAMP	A	$ 29.83
80360-3	5" MULTI PURPOSE LAMP, BULK	A	$ 27.33
80360-P	5" MULTI PURPOSE LAMP, PALLET	A	$ 25.93
80361	5" MULTI PURPOSE LAMP	C	$ 43.77
80364	5" UTILITY LAMP	C	$ 50.80
80368	5" UTILITY YELLOW FOG LAMP	D	$ 77.03
80373	5" MULTI PURPOSE LAMP	D	$ 52.27
80374	RUBBER SPOT CLEAR	B	$ 45.63
80375	RUBBER TRACTOR CLEAR	C	$ 87.63
80378	MULTI PURPOSE 5" CLEAR W/SWITCH	D	$ 46.40
80388	SEALED BEAM UNIVERSAL MOUNT CLEAR AUXILIARY	C	$ 81.27
80389	SEALED BEAM UNIVERSAL MOUNT FOG	C	$ 81.27
80394	SEALED BEAM UNIVERSAL MOUNT TRAPEZOID	A	$ 65.63
80394-3	SEALED BEAM UNIVERSAL MOUNT TRAPEZOID, BULK	A	$ 62.33
80395	SEALED BEAM UNIVERSAL MOUNT MEDIUM FLOOD	B	$ 67.93
80396	SEALED BEAM UNIVERSAL MOUNT WIDE FLOOD	A	$ 65.63
80396-3	SEALED BEAM UNIVERSAL MOUNT WIDE FLOOD, BULK	A	$ 62.33
80396-P	SEALED BEAM UNIVERSAL MOUNT WIDE FLOOD, PALLET	B	$ 59.30
80397	SEALED BEAM UNIVERSAL MOUNT SPOT	D	$ 81.27
80418	FLUORESCENT INTERIOR LAMP, WHITE	C	$ 216.60
80423C	80 SERIES BULB REPL. HOOK-UP LAMP, CLEAR	B	$ 37.10
80427	80 SERIES DOME LAMP, WHITE	A	$ 18.70
80438	MULTI PURPOSE 5" CLEAR W/ EXTENDED SHROUD	D	$ 59.17
80444	FLUORESCENT INTERIOR SURFACE MOUNT ,WHITE	C	$ 205.77
80461R	S/T/T LAMP UNIVERSAL HSNG.	C	$ 16.17
80462R	S/T/T LAMP W/O LICENSE LAMP	C	$ 13.17
80463R	S/T/T LAMP 2 BOLT HSNG.	C	$ 13.87
80482	80 SERIES DOME LAMP W/ SWITCH	C	$ 16.77
80490	RECESSED DOME LAMP	C	$ 14.90
80491	SEALED BEAM WORK LAMP FLOOD PATTERN	C	$ 137.00
80492	SEALED BEAM WORK LAMP SPOT 2 PATTERN	C	$ 138.33
80493	SEALED BEAM FLOOD PATTERN W/SWITCH	C	$ 101.47
80494	SEALED BEAM FLOOD PATTERN W/SWITCH	C	$ 138.57
80497	SEALED BEAM HSNG	W	$ 25.07
80498	SEALED BEAM WORK LAMP TRAPEZOID PATTERN	D	$ 135.30
80513	CLEAR DRIVING KIT	D	$ 146.63
80514	CLEAR FOG KIT	D	$ 147.77
80519	YELLOW FOG KIT	D	$ 147.77
80520	CLEAR DRIVING KIT	D	$ 129.37
80521	CLEAR FOG KIT	D	$ 129.37
80522	YELLOW FOG KIT	D	$ 129.37
80525	CLEAR DRIVING KIT	C	$ 79.90
80526	CLEAR FOG KIT	A	$ 75.03
80527	YELLOW FOG KIT	C	$ 83.27
80560	HALOGEN BULB	B	$ 12.30
80561	24 VOLT HALOGEN	B	$ 21.57
80563	HALOGEN BULB	B	$ 16.73
80564	HALOGEN BULB	B	$ 32.93
80571	HALOGEN BULB	B	$ 7.47

80593	WIRING KIT	B	$ 30.17
80594	ILLUMINATE ROCKER SWITCH	B	$ 9.20
80596	9003LL-HB2, HALOGEN HIGH/LOW BEAM BULB, 12V	B	$ 19.43
80598	9005LL-HB3, HALOGEN HIGH BEAM BULB, 12V	B	$ 18.57
80599	9006LL-HB4, HALOGEN LOW BEAM BULB, 12V	B	$ 18.06
80602	RND CVR,BLACK,PR,F/80500/01/02	W	$ 43.10
80604	REPLACEMENT BULB F/ 20310C	W	$ 2.13
80700	BALLAST ASSY	C	$ 129.90
80720	LICENSE PLATE BRACKET	D	$ 3.60
80722	LICENSE PLATE BRACKET	W	$ 5.13
80800	UNIVERSAL SNOW PLOW/ ATL LIGHTS	A	$ 420.97
80800-3	UNIVERSAL SNOW PLOW/ ATL LIGHTS, BULK	A	$ 387.97
80800-P	UNIVERSAL SNOW PLOW/ ATL LIGHTS, PALLET	A	$ 360.50
80805	UNIVERSAL SNOW PLOW LAMP KIT	C	$ 509.30
80810	LIGHT ASSY LH	B	$ 147.77
80820	LIGHT ASSY RH	B	$ 147.77
80830	UNIVERSAL SNOW PLOW HARNESS	C	$ 110.03
80831	ECONOMY SNOW PLOW HARNESS	C	$ 61.17
80840	UNIVERSAL SNOW PLOW HARDWARE	C	$ 40.12
80844	ECONOMY SNOW PLOW HARDWARE	C	$ 35.92
80848	UNIVERSAL SNOW PLOW LH LAMP	C	$ 168.55
80849	UNIVERSAL SNOW PLOW RH LAMP	C	$ 168.55
80860	ECONOMY LH REPLACEMENT	C	$ 161.84
80863	OBSOLETE		
80867	LED SS SF PED LMAP 24"	W	$ 83.00
80870	ECONOMY RH REPLACEMENT	C	$ 161.84
80870-3	ECONOMY RH REPLACEMENT, BULK	C	$ 146.46
80873	LED 5X7 SNOW PLOW HEADLAMP LH 12V	W	$ 873.43
80874	LED 5X7 SNOW PLOW HEADLAMP RH 12V	W	$ 873.43
80875	LED 5X7 SNOW PLOW HEADLAMP KIT	W	$ 1,911.37
80878	LED HEADLAMP PH7 SNOWPLOW RH	W	$ 936.10
80879	LED HEADLAMP PH7 SNOWPLOW LH	W	$ 936.10
80880	LED 7*INCH ROUND HEADLAMP PH7 SNOWPLOW KIT	W	$ 1,821.80
80888	ECONOMY SNOW PLOW / ATL KIT	A	$ 359.40
80888-3	ECONOMY SNOW PLOW / ATL KIT, BULK	A	$ 332.70
80888-P	ECONOMY SNOW PLOW / ATL KIT, PALLET	A	$ 307.77
80893	UNIVERSAL SNOW PLOW / ATL KIT	A	$ 632.97
80893-3	UNIVERSAL SNOW PLOW / ATL KIT, BULK	A	$ 585.97
80893-P	UNIVERSAL SNOW PLOW / ATL KIT, PALLET	A	$ 542.00
80898	LED SNOWPLOW 5X7 HARNESS	W	$ 144.27
80900	ATL-DRL LAMP KIT W/PE CONNECTORS	D	$ 603.17
80910	ATL-DRL LH DRIVER SIDE LAMP ASSY	D	$ 181.07
80920	ATL-DRL RH PASSENGER SIDE LAMP ASSY	D	$ 181.07
80970	DRL- ATL HB5 ADAPTER KIT	C	$ 61.62
80971	DRL- ATL HB4 ADAPTER KIT	C	$ 61.62
80972	DRL- ATL 2E ADAPTER KIT	C	$ 38.77
80973	DRL- ATL 2D/2B ADAPTER KIT	C	$ 43.52
80974	DRL - ATL 1A/2A ADAPTER KIT	C	$ 54.57
80975	DRL - ATL LF/UF ADAPTER KIT	C	$ 52.71
80976	DRL - ATL HB3/HB4 ADAPTER KIT	C	$ 136.35
80988	LMP-LED HDLMP,PH7, HTD SNPL,RH	B	$ 961.90

80989	LMP-LED HDLMP,PH7, HTD SNPL,LH	B	$ 961.90
80990	LED 7-INCH HEATED HEADLAMP SNOW PLOW KIT	B	$ 2,082.70
81240	81 SERIES LED WORK LAMP 24V,W/ HARDWARE	A	$ 294.70
81240-3	81 SERIES LED WORK LAMP 24,W/ HARDWARE, BULK	A	$ 279.97
81245	LED CHROME WL W/HARDWARE LAMP, 24V	A	$ 376.77
81250	LED FLOOD 24V LAMP W/HARDWIRE, BLACK	A	$ 294.70
81250-3	LED FLOOD 24V LAMP W/HARDWIRE, BLACK, BULK	A	$ 279.97
81255	LED 24V WORK LAMP, CHROME	A	$ 376.77
81260	LED RUBBER FLOOD WORKLAMP HARDWIRED	A	$ 170.57
81260-3	LED RUBBER FLOOD WORKLAMP HARDWIRED, BULK	A	$ 162.03
81260-P	LED RUBBER FLOOD WORKLAMP HARDWIRED, PALLET	A	$ 153.93
81261	LED 44 SERIES WORKLAMP	A	$ 168.93
81261-3	LED 44 SERIES WORKLAMP, BULK	A	$ 160.50
81261-P	LED 44 SERIES WORKLAMP, PALLET	A	$ 152.47
81270	81 SERIES LED WORK LAMP, WHITE HOUSING, 24V	A	$ 294.70
81270-3	81 SERIES LED WORK LAMP, WHITE HOUSING, 24V, BULK	A	$ 279.97
81290	LED WORK LAMP, 24V, HI BRIGHT, SPOT	A	$ 331.83
81295	LED WORK LAMP, 24V, SPOT, CHROME HOUSING	A	$ 376.77
81300Y	81 SERIES BULB REPLACEABLE T/S W/BLACK HSNG	W	$ 20.17
81312Y	OBSOLETE		
81331	OBSOLETE		
81335C	LED 12V PERIMETER LAMP	C	$ 183.10
81350	INTERIOR/ DOME BULB REPLACEABLE CLEAR LAMP	B	$ 17.20
81360	LED 81 SERIES 4" ROUND WORK LAMP, 6-DIODE, 12V,W/ HARDWARE	A	$ 294.70
81360-3	LED 81 SERIES 4" ROUND WORK LAMP, 6-DIODE, 12V,W/ HARDWARE, BULK	A	$ 279.97
81360-P	81 SERIES LED WORK LAMP 12V,W/ HARDWARE, PALLET	A	$ 263.97
81365	LED WORK LAMP, 12V, CHROME W/HARDWARE	A	$ 376.77
81371	81 SERIES LED WORK LAMP, BLACK HOUSING W/20' LEADS	A	$ 375.93
81374	81 SERIES LED WORKLAMP, WHITE HOUSING, 12V	A	$ 294.70
81374-3	81 SERIES LED WORKLAMP, WHITE HOUSING, 12V, BULK	A	$ 279.97
81380	12V LED FLOOD LAMP, BLACK	A	$ 294.70
81380-3	12V LED FLOOD LAMP, BLACK, BULK	A	$ 279.97
81385	LED WORK LAMP, 12V, CHROME W/HARDWARE	A	$ 376.77
81390	LED WORK LAMP, 12V, HI BRIGHT, SPOT	A	$ 331.83
81390-3	LED WORK LAMP, 12V, HI BRIGHT, SPOT, BULK	S	$ 315.23
81391	LED WORK LAMP, 12V, HI BRIGHT, SPOT, WHITE HOUSING	A	$ 339.73
81395	LED WORK LAMP, 12V, SPOT, CHROME HOUSING	A	$ 376.77
8140	LED 3-INCH RND WORK LAMP,4 DIODE,9V-36V,700LM	W	$ 132.17
8140-3	LED 3-INCH RND WORK LAMP,4 DIODE,9V-36V,700LM, BULK	W	$ 125.57
8150	8 DIODE ROUND LAMP	W	$ 202.07
8150-3	8 DIODE ROUND LAMP, BULK	W	$ 191.97
81500	LED 12 ECE SQUARE WORKLAMP, 10-30V	W	$ 807.57
81500-3	LED 12 ECE SQUARE WORKLAMP, 10-30V BULK	W	$ 767.20
81510	LED 8 ECE SQUARE WORKLAMP, 10-30V	W	$ 707.50
81510-3	LED 8 ECE SQUARE WORKLAMP, 10-30V BULK	W	$ 665.23
81520	LED 4 ECE SQUARE WORKLAMP, 10-30V	W	$ 516.93
81520-3	LED 4 ECE SQUARE WORKLAMP, 10-30V BULK	W	$ 491.07
8155	8 DIODE RECTANGULAR LAMP	W	$ 202.07
8155-3	8 DIODE RECTANGULAR LAMP, BULK	W	$ 191.97
81560	LED FORKLIFT LAMP 10-50V.	W	$ 334.50
81560-3	LED FORKLIFT LAMP 10-50V. BULK	W	$ 317.80

8160	LED 10 DIODE 4" RECTANGULAR AUX LAMP	W	$ 223.37
8160-3	LED 10 DIODE 4" RECTANGULAR AUX LAMP, BULK	W	$ 215.03
8170	LED FLOOD LAMP 12-16V	W	$ 264.47
8170-3	LED FLOOD LAMP 12-16V, BULK	W	$ 251.23
81701	LED 7" AUXILIARY SPOT LAMP 12V	W	$ 623.33
81702	LED 7" AUXILIARY WORK LAMP 12V	W	$ 623.33
81704	LED 7" AUXILIARY FLOOD LAMP 12V	W	$ 623.33
81711	LED 7" AUXILIARY SPOT LAMP & MOUNT 12V	W	$ 723.33
81712	LED 7" AUXILIARY WORK LAMP & MOUNT 12V	W	$ 723.33
81714	LED 7" AUXILIARY FLOOD LAMP & MOUNT 12V	W	$ 723.33
8180	LED 5.5" OVAL WORK LAMP,8 DIODE,9V-36V,1400LM	W	$ 232.67
8180-3	LED 5.5" OVAL WORK LAMP,8 DIODE,9V-36V,1400LM, BULK	W	$ 221.03
81802	OBSOLETE		
81804	LED 7" AUXILIARY FLOOD LAMP 24V	W	$ 623.33
81811	LED 7" AUXILIARY SPOT LAMP & MOUNT 24V	W	$ 723.33
81812	LED 7" AUXILIARY WORK LAMP & MOUNT 24V	W	$ 723.33
81814	OBSOLETE		$ -
8192	FLOOD, CLEAR, SQUARE LAMP, 3.5” x 3.5”	C	$ 207.73
8192-3	FLOOD, CLEAR, SQUARE LAMP, 3.5” x 3.5”, BULK	C	$ 197.33
8193	FLOOD, CLEAR, OVAL LAMP, 5.5” x 3.75”	C	$ 295.60
8193-3	FLOOD, CLEAR, OVAL LAMP, 5.5” x 3.75”, BULK	C	$ 280.83
8370A	"HIDE-A-WAY" STROBE LIGHTHEAD YELLOW	W	$ 185.97
8370W	"HIDE-A-WAY" STROBE LIGHTHEAD CLEAR	W	$ 116.93
84200C	LED STRIP DOME LAMP W/ 4' CORNER MOUNT	A	$ 587.13
84201C	LED STRIP DOME LAMP W/4" CORNER MOUNT W/LENS	A	$ 609.00
84201C3	LED STRIP DOME LAMP W/4" CORNER MOUNT W/LENS, BULK	A	$ 578.56
84205C	LED STRIP DOME LAMP W/ 4' FLAT MOUNT	A	$ 578.66
84206C	LED STRIP DOME LAMP W/4" FLAT MOUNT W/ LENS	A	$ 609.00
84206C3	LED STRIP DOME LAMP W/4" FLAT MOUNT W/ LENS, BULK	A	$ 578.56
84210C	LED STRIP DOME LAMP W/ 2' CORNER MOUNT	A	$ 362.45
84210C3	LED STRIP DOME LAMP W/ 2' CORNER MOUNT, BULK	A	$ 344.32
84211C	LED STRIP DOME LAMP W/ 2' CORNER MOUNT W/ LENS	A	$ 363.81
84211C3	LED STRIP DOME LAMP W/ 2' CORNER MOUNT, W/LENS, BULK	A	$ 345.61
84215C	LED STRIP DOME LAMP W/ 2' FLAT MOUNT	A	$ 358.74
84215C3	LED STRIP DOME LAMP W/ 2' FLAT MOUNT, BULK	A	$ 340.82
84216C	LED STRIP DOME LAMP W/ 2' FLAT MOUNT W/ LENS	A	$ 363.81
84216C3	LED STRIP DOME LAMP W/ 2' FLAT MOUNT W/ LENS, BULK	A	$ 345.61
87357	408" CLEARANCE MARKER HARNESS	C	$ 76.37
87358	408" MARKER CLEARANCE SINGLE PLUG HARNESS	C	$ 76.83
87845	CABLE CLAMP	C	$ 1.97
88-02210	"O" RING	D	$ 6.57
8810	FOR 6600,6601,6610 AND 6611 STROBE LAMPS	W	$ 62.67
88100	360" "ABS" POWER HARNESS	C	$ 116.53
8812	FLASH TUBE,REPLACEMENT ,STAR-129-L	W	$ 70.37
8820	FOR 6800,6801,6810 AND 6811 STROBE LAMPS	W	$ 77.53
88-2101	FOR 9770A	W	$ 125.77
88-2126	FOR 6850A	W	$ 186.97
8830	TWIST LOCK FLASH TUBE FOR WHELEN FIRE/AMBULANCE STROBE LAMPS	C	$ 148.80
88300	60" 3 PLUG LOWER ID HARNESS	C	$ 37.60
88301	192" UPPER ID HARNESS	C	$ 56.47
88303	24" CLEARANCE MARKER HARNESS	C	$ 14.23

88307	36" LICENSE HARNESS	C	$ 12.47
88308	60" LOWER ID AND LICENSE HARNESS	C	$ 38.63
88338	24" LED 4 PLUG ID AND LICENSE HARNESS	C	$ 47.47
88342	12" MARKER CLEARANCE JUMPER	C	$ 22.70
88357	36" ADAPTER HARNESS F/15219 LICENSE LAMP	W	$ 23.71
88358	180 "UPPER ID HARNESS	W	$ 77.76
88367	60" LED LOWER ID HARNESS	C	$ 37.40
88368	192" LED UPPER ID HARNESS	C	$ 49.97
88372	60" LED LOWER ID HARNESS W/14.25" CENTERS	C	$ 31.30
88373	24" LED CLEARANCE MARKER HARNESS	C	$ 19.43
88377	LED MARKER/CLEARANCE HARNESS	D	$ 24.70
88385	24" LED CLEARANCE MARKER HARNESS W/ JUMPER PLUG	C	$ 51.93
8840	LINEAR FLASH TUBE FOR WHELEN 64 SERIES STROBE LAMPS	D	$ 148.80
88401	48" MARKER/CLEARANCE JUMPER FEED HARNESS	W	$ 18.57
88417	5 CONDUCTOR MAIN CABLE	C	$ 84.13
88-43210	FLASH TUBE FOR 300, 301, 302, 309, 337	D	$ 117.03
8850	LINEAR STROBE FLASH TUBE	W	$ 167.67
88601	720" 6 CONDUCTOR MAIN CABLE	C	$ 398.53
8861	LENS FOR 1150	D	$ 11.37
8861-3	LENS FOR 1150, BULK	W	$ 7.80
8861A	LENS FOR 1150A	D	$ 11.37
8861A-3	LENS FOR 1150A, BULK	W	$ 7.80
88701	720" 7 CONDUCTOR MAIN CABLE	C	$ 326.60
88703	720" 7 CONDUCTOR MAIN CABLE	C	$ 446.63
88750	744" 7 CONDUCTOR MAIN CABLE	W	$ 449.63
88751	744" 7 CONDUCTOR MAIN CABLE	W	$ 551.73
88810	24" MAIN RETRO FIT/REPAIR HARNESS	C	$ 72.40
88820	456" CONDUCTOR JUMPER HARNESS	D	$ 367.30
88824	88 SERIES CHASSIS ADAPTER	W	$ 59.80
88-88130	GASKET	W	$ 4.77
88892	88 SERIES NOSE BOX JUMPER HARNESS	D	$ 200.27
88896	88 SERIES NOSE BOX JUMPER W/2 POSITIONS	D	$ 246.13
88900	REAR 7- WAY ADAPTER HARNESS	C	$ 147.90
88902	REAR 7- WAY ADAPTER "ABS" POWER HARNESS	C	$ 163.73
88905	88 SERIES DOUBLE 7 WAY RECEPTACLE HARNESS	D	$ 239.33
88910	REAR SILL HARNESS	C	$ 199.80
88911	REAR SILL AUXILIARY HARNESS	C	$ 233.97
88915	REAR SILL HARNESS W/O MID-TURN DROP OUTS	C	$ 200.00
88930	LED REAR SILL HARNESS	C	$ 225.07
88931	LED REAR SILL HARNESS W/AUXILIARY RED, BLUE, WHITE DROP-OUTS	C	$ 253.83
88932	LED REAR SILL HARNESS W/O MID-TURN DROP-OUTS	C	$ 213.93
88962	88 SERIES PINTLE HOOK	D	$ 257.40
8900	LENS AND SCREWS FOR 1265	D	$ 8.77
8900A	LENS AND SCREWS FOR 1265A	D	$ 8.77
8909	LENS FOR 2110,2112	W	$ 16.70
8923	LENS FOR 4701, 4702, 4703	W	$ 18.33
8923A	LENS FOR 4701, 4702, 4703	W	$ 18.33
8925A	LENS AND GASKET FOR 1350A	D	$ 24.77
8933	LENS FOR 1263,1264	B	$ 2.37
8933A	LENS FOR 1263,1264	B	$ 2.37
8934	OBSOLETE		

8934A	OBSOLETE		
8934W	LENS FOR 1294,1295	C	$ 5.40
8935W	LENS FOR 9380	D	$ 13.40
8936	LENS FOR 677WK,3753,3754,3755,3756,3850,3853	W	$ 13.40
8936A	LENS FOR 677WK,3753,3754,3755,3756,3850,3853	W	$ 13.40
8937	LENS FOR 555D	W	$ 3.10
8937A	LENS FOR 555AD	W	$ 3.10
8938	LENS FOR 4742,4754	W	$ 20.33
8938A	LENS FOR 4742,4754	W	$ 20.33
8943	LENS FOR 131	C	$ 16.03
8943A	LENS FOR 131	C	$ 16.03
8945	LENS FOR 1505,1506	C	$ 6.67
8945A	LENS FOR 1505,1506	C	$ 6.67
8947	LENS FOR 533,534,535,1570	W	$ 5.03
8947A	LENS FOR 533,534,535,1570	C	$ 5.03
8948	LENS FOR 533,534.535	A	$ 5.63
8951W	LENS HOOD FOR 425	W	$ 21.57
8960	LENS FOR 940,941,950,955,956,957	W	$ 21.47
8974	LENS FOR 2201,2203,2204	W	$ 5.30
89751	88 SERIES7 MAIN CONDUCTOR W/BREAKOUT 744"	D	$ 668.90
89810	88 SERIES 7 CONDUCTOR NOSE BOX RETRO FIT	D	$ 200.10
900	T/S SWITCH, FLAT BACK	A	$ 99.50
9004	LENS FOR BEEHIVE LAMPS	C	$ 2.47
9004A	LENS FOR BEEHIVE LAMPS	C	$ 2.47
9005W	LENS FOR 1101,1102,1105,1108,9365,9366,9369	W	$ 9.27
9006	LENS AND O RING FOR 1201,1203,1204	D	$ 5.30
9006A	LENS AND O RING FOR 1201,1203,1204	D	$ 5.30
9007	LENS FOR 1201,1203,1204,1211,1213,1216,1253	A	$ 2.37
9007-3	LENS FOR 1201,1203,1204,1211,1213,1216,1253, BULK	A	$ 1.87
9007A	LENS FOR 1201,1203,1204,1211,1213,1216,1253	A	$ 2.37
9007A-3	LENS FOR 1201,1203,1204,1211,1213,1216,1253, BULK	A	$ 1.87
9007G	LENS FOR 1201,1203,1204,1211,1213,1216,1253	D	$ 3.60
9007W	LENS FOR 1201,1203,1204,1211,1213,1216,1253	D	$ 3.60
900Y114	OEM SWITCH, NAVISTAR REPLACEMENT	D	$ 157.44
900Y129	OEM SWITCH, VOLVO AND WHT REPLACEMENT	D	$ 174.98
900Y166	OEM SWITCH FORD, FREIGHTLINER REPLACEMENT	D	$ 187.03
900Y170	OEM SWITCH FORD, FREIGHTLINER REPLACEMENT	D	$ 147.91
900Y179	OEM SWITCH FORD, FREIGHTLINER REPLACEMENT	D	$ 200.44
900Y180	OEM SWITCH FORD, FREIGHTLINER REPLACEMENT	D	$ 136.90
900Y205	OEM SWITCH, TENNANT REPLACEMENT	D	$ 147.77
900Y206	OEM SWITCH, NAVISTAR REPLACEMENT	D	$ 187.92
900Y209	OEM SWITCH, KENWORTH REPLACEMENT	D	$ 148.46
900Y73	OEM SWITCH, MACK REPLACEMENT	D	$ 162.77
901	T/S SWITCH, CHROME	W	$ 183.07
9016	' LEGENDARY' CYCLOSTAT LENS	B	$ 6.07
9016-3	' LEGENDARY' CYCLOSTAT LENS, BULK	B	$ 4.20
9016A	' LEGENDARY' CYCLOSTAT LENS	B	$ 6.07
9016B	' LEGENDARY' CYCLOSTAT LENS	W	$ 8.57
9016G	' LEGENDARY' CYCLOSTAT LENS	W	$ 8.57
9016W	' LEGENDARY' CYCLOSTAT LENS	W	$ 6.47
902	T/S SWITCH, FLAT BACK	D	$ 138.03

9021	CYCLOSTAT LENS ,GASKET, SCREWS	D	$ 11.87
9021A	CYCLOSTAT LENS ,GASKET, SCREWS	W	$ 11.87
9021W	CYCLOSTAT LENS ,GASKET, SCREWS	D	$ 11.87
90251	OEM SWITCH, FORD/STERLING REPLACEMENT, MULTI FUNCTION	W	$ 244.96
90251Y103	OEM SWITCH, FREIGHTLINER REPLACEMENT	W	$ 332.42
90251Y103-3	OEM SWITCH, FREIGHTLINER REPLACEMENT, BULK	W	$ 220.02
9029	LENS FOR SNAP RING LAMPS	B	$ 2.70
9029W	LENS FOR SNAP RING LAMPS	B	$ 3.80
903	T/S SWITCH, CHROME	W	$ 199.31
90325Y	TURN SIGNAL LAMP W/ARROW	D	$ 65.20
90326R	SCHOOL BUS WARNING LAMP, 12 VOLT	D	$ 90.50
90326Y	SCHOOL BUS WARNING LAMP, 12 VOLT	D	$ 90.50
90327R	SCHOOL BUS S/T/T LAMP, 12 VOLT	B	$ 50.53
90327Y	SCHOOL BUS P/T LAMP, 12 VOLT	B	$ 50.53
9041	LENS FOR 540 SER,3751,3752,3851	C	$ 9.27
9041A	LENS FOR 540 SER,3751,3752,3851	C	$ 9.27
9049	DUAL OPTIC LENS FOR 4027 * FITS ALL 4010 AND 4020 SERIES LAMPS	D	$ 22.13
905	T/S SWITCH, FLAT BACK	C	$ 177.50
9057	LENS FOR 1221, 1222	C	$ 7.80
9057A	LENS FOR 1221, 1222	D	$ 7.80
9059	LENS FOR 1550,1551	D	$ 4.93
9059A	LENS FOR 1550,1551	W	$ 4.93
9063	LENS AND GASKET FOR 4800 SER	D	$ 17.07
9063A	LENS AND GASKET FOR 4800 SER	D	$ 17.07
9069A	LENS FOR 1313 GM # 684662	A	$ 15.63
9071	SPIRAL OPTIC LENS AND GASKET FOR 4010 AND 4020 SERIES LAMPS	C	$ 27.20
9072	LENS FOR 5010 SERIES LAMPS * NO SCREW HOLES *	B	$ 25.40
9076W	LENS AND O RING FOR 92W	D	$ 23.60
9077	LENS FOR 1205,1233,1235	D	$ 14.60
9077A	LENS FOR 1205,1233,1235	D	$ 14.60
9079	LENS AND GASKET FOR 4842	D	$ 17.07
9079A	LENS AND GASKET FOR 4842	D	$ 17.07
9080A	MARKER LENS AND GASKET FOR 4800 SER LAMPS	W	$ 19.43
9081A	CAB MARKET LENS AND O- RING GM # 2004543(RED) GM # 799386(YELLOW)	B	$ 20.23
9082	LENS FOR 1520,1521,1523	C	$ 8.73
9083	LENS FOR 4800	D	$ 8.93
9084A	LENS FOR 5800 SER LAMPS	D	$ 8.40
9087A	LENS, GASKET AND SCREW FOR 1312	W	$ 9.37
9088A	LENS-MARKER, AMBER	B	$ 1.33
9089	LENS-MAIN S/T/T	B	$ 3.23
9090	LENS-SIDE MARKER, RED	B	$ 1.30
9093	LENS FOR 1258,1259,1262	A	$ 1.93
9093-3	LENS FOR 1258,1259,1262, BULK	A	$ 1.77
9093A	LENS FOR 1258,1259,1262	A	$ 1.93
9093A-3	LENS FOR 1258,1259,1262, BULK	A	$ 1.77
9093B	LENS FOR 1258,1259,1262	A	$ 2.90
9093G	LENS FOR 1258,1259,1262	A	$ 2.90
910	T/S SWITCH, FAT BACK, HEAVY LOAD SWITCH	W	$ 241.63
91002	960 SERIES SELF CANCELING T/S SWITCH	C	$ 158.57
91002R	MDL 91 S/T/T LAMP KIT	A	$ 33.85
91002Y	MDL 91 S/T/T LAMP KIT	C	$ 36.08

9101	DOUBLE CONTACT PLUG	B	$ 7.43
9101-3	DOUBLE CONTACT PLUG, BULK	B	$ 5.20
9102	SINGLE CONTACT PLUG,	B	$ 5.17
9102-3	SINGLE CONTACT PLUG, BULK	B	$ 3.53
9103	PIGTAIL ASSY	W	$ 5.20
91150	60 SERIES SELF CANCELING T/S SWITCH, 7 SPEED	C	$ 163.94
9120	"O" RING	W	$ 5.63
91202R	MDL 91 S/T/T LAMP	C	$ 33.37
91202Y	MDL 91 S/T/T LAMP	C	$ 33.37
91241Y	LED 91 SERIES TURN LAMP 12V W/ REFLEX	B	$ 118.80
91242R	LED 91 SERIES S/T/T LAMP 12V W/REFLEX	B	$ 118.80
91243Y	LED 91 SERIES TURN LAMP 12V W/O REFLEX	B	$ 115.40
91244R	LED 91 SERIES S/T/T LAMP 12V W/O REFLEX	B	$ 115.40
91250	960 SERIES SELF CANCELING T/S SWITCH, 2 SPEED	C	$ 165.14
91315R	MDL 91 BULB REPLEACABLE S/T/T W/SOCKET ASSY	B	$ 40.67
91369R	LED S/T/T ACRYLIC LAMP 12V W/CONNECTOR	B	$ 133.80
91370Y	Led TURN ACRYLIC LAMP 12V W/CONNECTOR	B	$ 133.80
915Y103	OEM SWITCH, KENWORTH REPLACEMENT	D	$ 187.20
915Y104	OEM SWITCH, PETERBILT REPLACEMENT	D	$ 237.60
915Y105	OEM SWITCH, VOLVO REPLACEMENT	D	$ 173.57
915Y113	OEM SWITCH, FREIGHTLINER REPLACEMENT	D	$ 204.47
915Y114	OEM SWITCH, PETERBILT	D	$ 194.53
915Y116	OEM SWITCH, VOLVO/GM REPLACEMENT	D	$ 294.89
915Y117	OEM SWITCH, VOLVO REPLACEMENT	D	$ 294.89
915Y119	OEM SWITCH, FORD, FREIGHTLINER REPLACEMENT	D	$ 164.73
915Y124	OEM SWITCH, PETERBILT REPLACEMENT	D	$ 294.89
915Y128	OEM SWITCH, FORD REPLACEMENT	D	$ 206.15
9160	SINGLE CONTACT PLUG	W	$ 10.43
9179	26 SERIES LAMP GUARD	B	$ 15.27
9179-3	26 SERIES LAMP GUARD, BULK	B	$ 13.77
9180	"O" RING	A	$ 5.50
9183	FLASHER/BULB CONNECTOR	C	$ 18.23
9185	RELAY CONNECTOR	C	$ 19.33
9186	FLASHER CONNECTOR	D	$ 28.40
9190	MOUNTING KIT	W	$ 8.57
9196	LED REPLACEMENT f/900 SWITCH	W	$ 45.52
92100	LED CHMSL LAMP ADHESIVE MOUNT 9 DIODE PATTERN	D	$ 94.73
92101	LED CHMSL LAMP ADHESIVE MOUNT, 9 DIODE PATTERN	W	$ 108.57
9228	PLUG F/ USE W/ 1653 & 1654	W	$ 19.41
92513Y	ELECTRONIC STROBE, QUAD FLASH	C	$ 520.07
92516Y	ELECTRONIC STROBE, QUAD FLASH	C	$ 393.10
92522Y	ELECTRONIC MINI BAR STROBE, QUAD FLASH	C	$ 807.30
92523Y	ELECTRONIC MINI BAR STROBE, QUAD FLASH W/MAGNETIC BASE	C	$ 868.40
92524Y	ELECTRONIC MINI BAR ROTATING. BEACON W/2 HALOGEN ROTATORS	C	$ 405.57
92525B	ELECTRONIC MINI BAR ROTATING. BEACON W/2 HALOGEN ROTATORS W/MAGI BASE	W	$ 492.89
92525Y	ELECTRONIC MINI BAR ROTATING BEACON W/2 HALOGEN ROTATORS W/MAGI BASE	C	$ 517.53
92534Y	ELECTRONIC LOW PROFILE STROBE	C	$ 181.63
92539Y	LOW PRO. STROBE LIGHT PERMANENT MOUNT	C	$ 262.63
92547	360 STROBE KIT MAGNETIC MOUNT BASE	C	$ 111.27
92550Y	4" REMOTE STROBE HEAD (40)	C	$ 214.97
92551Y	OVAL REMOTE STROBE HEAD (60)	C	$ 213.30

92552Y	7" ROUND REMOTE STROBE HEAD(90)	C	$ 218.10
92553Y	4" ROUND PAR 36 REMOTE STROBE HEAD (40), RUBBER HSNG.	C	$ 222.27
92554Y	360 REMOTE STROBE HEAD	C	$ 330.00
92556Y	REMOTE STROBE HEAD, AERODYNAMIC CAB MARKER	B	$ 272.33
92557Y	REMOTE STROBE HEAD, 45 SERIES	B	$ 255.57
92560	STROBE 12-110VDC 80FPM,8J,8J,6W,AMB	D	$ 173.33
92563	LED STROB 10-16V DC, AMBER	W	$ 214.83
92564C	LED 360 STROBE LOW PROFILE, CLEAR W/CLEAR LENS	A	$ 825.18
92564Y	LED 360 STROBE LOW PROFILE, YELLOW W/YELLOW LENS	A	$ 505.85
92565B	LED 360 MEDIUM PROFILE STROBE	A	$ 805.05
92565C	LED 360 MEDIUM PROFILE STROBE	A	$ 762.81
92565R	LED 360 MEDIUM PROFILE STROBE	A	$ 564.75
92565Y	LED SOLID-STATE WARNING LAMP, MEDIUM PROFILE	A	$ 545.56
92566Y	LED SOLID-STATE WARNING LAMP, MEDIUM PROFILE	A	$ 505.85
92568B	LED SOLID-STATE WARNING LAMP (SWL) MEDIUM PROFILE BLUE	A	$ 861.30
92568R	LED SOLID-STATE WARNING LAMP (SWL) MEDIUM PROFILE RED	A	$ 621.00
92568Y	LED SOLID-STATE WARNING LAMP MEDIUM PROFILE	A	$ 618.01
92569Y	LED SOLID-STATE Warning LAMP, MEDIUM PROFILE, MAGNETic MOUNT	A	$ 638.96
92590Y	LED AND STROBE COMBO LIGHT BAR	D	$ 6,476.80
9260	PIGTAIL	C	$ 26.37
92600Y	OBSOLETE		$ -
92602Y	TEARDROP REVOLVING BEACON	D	$ 141.80
92642Y	HALOGEN ROTATOR MINIBAR PERMANENT MOUNT	D	$ 450.13
92644Y	HALOGEN ROTATOR MINIBAR MAGNETIC/SUCTION CUP MOUNT	D	$ 585.73
92645Y	16.5" MINI BAR BEACON LAMP WITH PERMANENT MOUNT	D	$ 1,018.57
92646Y	16.5" MINI BAR BEACON LAMP WITH SHOCK MOUNT	D	$ 1,077.77
92668Y	36" HALOGEN LIGHT BAR	W	$ 1,581.83
92669Y	36" STROBE	W	$ 2,344.30
92670Y	46" HALOGEN LIGHT BAR	W	$ 1,687.87
92671Y	46" STROBE	W	$ 2,794.37
92672Y	46" HALOGEN LIGHT BAR W/ REAR TRAFFIC DIRECTOR	W	$ 3,489.23
92673Y	46" STROBE	W	$ 4,605.83
92676Y	HALOGEN 4 ROTATOR POWER BAR W/ REAR TRAFFIC DIRECTOR	D	$ 4,272.80
92677Y	HALOGEN 5 ROTATOR POWER BAR W/ REAR TRAFFIC DIRECTOR	D	$ 3,172.20
92680Y	OBSOLETE		$ -
92685Y	HALOGEN ROTATOR LIGHT BAR, AMBER	W	$ 1,409.25
92695R	LED EXT MDL, ALUM, RED LC25R	W	$ 213.30
92695Y	LED EXT MDL, ALUM, AMBER LC25R	W	$ 213.30
92696R	LED EXT MDL KIT, BLACK BASE, RED	W	$ 213.30
92696Y	LED EXT MDL KIT, BLACK BASE, YELLOW	W	$ 213.30
92711	FLASH TUBE	D	$ 71.17
92715	FLASH TUBE	C	$ 199.57
92720	ROTATOR ASSY	C	$ 124.77
92722	HALOGEN BULB	C	$ 30.80
92760	TRAFFIC DIRECTOR CONTROL HEAD	D	$ 407.53
92808	RETAINING RING	D	$ 3.37
92820	FILTER	D	$ 2.47
92844	HIDE-A-WAY 2 LAMP SYSTEM	W	$ 649.77
92845	HIDE-A-WAY 2 LAMP SYSTEM	W	$ 1,152.17
92846	BULBS	D	$ 119.73
92849	LED HEAD REPLACEMENT CONTROL f/19680A	W	$ 1,674.13

92855	HIDE A STAR IN LN REMOTE LED	D	$ 429.27
92860Y	HALO LED STROBE,PLST BS MED PROFILE, PERMANENT MOUNT	D	$ 609.70
92861Y	HALO LED STROBE,PLST BS MED PROFILE, MAGNETIC MOUNT	D	$ 685.87
92862Y	HALO LED STROBE, PLST BS LOW PROFILE, PERMANENT MOUNT	D	$ 609.70
92863Y	HALO LED STROBE,PLST BS LOW PROFILE, MAGNETIC MOUNT	D	$ 685.87
92864Y	HALO LED STROBE, SAE CLASS1,CA	D	$ 804.47
92865Y	HALO LED STROBE, SAE CL1 CA 13	D	$ 931.47
92866Y	M-TECH PLUS AERO STAR MINI BAR	W	$ 1,608.87
92867Y	M-TECH PLUS LIGHT BAR	W	$ 4,225.43
92868Y	LED TRAFFIC DIRECTOR 1.5"	W	$ 2,097.30
92869Y	LED TRAFFIC DIRECTOR	W	$ 2,097.30
92870B	LED BULL HEAD W/STD BLACK BZL	D	$ 328.97
92870C	LED BULL HEAD W/STD BLACK BZL	D	$ 328.97
92870R	LED BULL HEAD W/STD BLACK BZL	D	$ 328.97
92870Y	LED BULL HEAD W/STD BLACK BZL	D	$ 328.97
92871B	LED 4"X 2" MINI SURFACE MOUNT	W	$ 277.37
92871C	LED 4"X 2" MINI SURFACE MOUNT	A	$ 277.37
92871R	LED 4"X 2" MINI SURFACE MOUNT	W	$ 236.07
92871Y	LED 4"X 2" MINI SURFACE MOUNT	W	$ 236.07
92872B	LED 4"X1.5" SURFACE HEAD MOUNT	W	$ 294.17
92872C	LED 4"X1.5" SURFACE HEAD MOUNT	A	$ 283.40
92872R	LED 4"X1.5" SURFACE HEAD MOUNT	W	$ 242.37
92872Y	LED 4"X1.5" SURFACE HEAD MOUNT	W	$ 242.37
92873R	OVAL LED HEAD, WITH GROMMET	D	$ 272.93
92873Y	OVAL LED HEAD, WITH GROMMET	D	$ 283.30
92874R	LED WIC3 GROMMET MOUNT HEAD	D	$ 297.17
92874Y	LED WIC3 GROMMET MOUNT HEAD	D	$ 308.47
92875R	SURFACE MOUNT LED WIC3	D	$ 266.87
92875Y	SURFACE MOUNT LED WIC3	D	$ 277.00
92876R	SURFACE MOUNT LED WIC3 ROUND	D	$ 278.97
92876Y	SURFACE MOUNT LED WIC3 ROUND	D	$ 289.57
92877	BEZEL, BLACK	D	$ 16.47
92878	BEZEL, CHROME	D	$ 31.03
9288	"V" BRACKET	W	$ 15.53
92880	BEZEL, CHROME	W	$ 39.43
92882	BEZEL, CHROME	W	$ 56.67
92900	B/U ALARM SINGLE SOUND	B	$ 73.00
92901	B/U ALARM SINGLE SOUND	C	$ 84.43
92902	B/U ALARM SINGLE SOUND	C	$ 93.10
92903	B/U ALARM SINGLE SOUND	D	$ 195.40
92904	B/U ALARM SINGLE SOUND	D	$ 223.57
92905	B/U ALARM SELF ADJUSTING	D	$ 267.00
92907	B/U ALARM WATER RESISTANT 5 AMPS	D	$ 84.60
92909	B/U ALARM SINGLE SOUND	D	$ 88.20
9291	UNIVERSAL ADJUSTMENT BRACKET	W	$ 26.13
92910	B/U ALARM COMPACT SINGLE SOUND	D	$ 116.43
92911	B/U ALARM COMPACT SELF ADJUSTING	D	$ 210.97
92914	B/U ALARM 4" ROUND SELF ADJUSTING	C	$ 168.00
92916	B/U ALARM 4" ROUND SELF ADJUSTING	C	$ 126.83
92918	B/U ALARM 4" ROUND SELF ADJUSTING	C	$ 129.67
92923	B/U ALARM SELF ADJUSTING	D	$ 213.57

92924	BACK- UP ALARM COMPACT SINGLE SOUND	D	$ 147.73
92925	B/U ALARM SWITCH	D	$ 96.73
92927	B/U ALARM DUAL FUNCTION	C	$ 257.17
92WD	SURFACE MOUNT BULB REPL. LAMP, DISPLAY	C	$ 40.57
9341	LENS FOR 3760,6763,3860,3861,3862,3863	D	$ 11.03
9341A	LENS FOR 3760,6763,3860,3861,3862,3863	D	$ 11.03
9342	LENS FOR 1507	D	$ 3.80
9342A	LENS FOR 1507	D	$ 3.80
9371	LENS FOR 1571D	D	$ 3.60
9371A	LENS FOR 1571D	D	$ 3.60
9371W	LENS FOR 1571D	D	$ 4.00
9372	LENS FOR 549D	W	$ 9.53
9372A	LENS FOR 549AD	W	$ 9.53
9373W	LENS FOR 549SWD	W	$ 11.13
93745	LED FIT N FORGET ADAPTER	C	$ 9.20
93745-3	LED FIT N FORGET ADAPTER , BULK	C	$ 8.77
9375A	OBSOLETE		
9380SWD	UNIVERSAL DOME LIGHT W/ SWITCH, DISPLAY	A	$ 32.03
9380W	UNIVERSAL DOME LIGHT W/O SWITCH	A	$ 28.83
93843	72" LH HARNESS FOR 40804	W	$ 41.87
93844	72" RH HARNESS FOR 40805	W	$ 41.87
9384A	LENS FOR 6501	D	$ 59.53
93906	6" CENTERS HARNESS	C	$ 17.43
93908	9" CENTERS HARNESS	D	$ 18.10
93943	ID BAR HARNESS W/.180 BULLET	C	$ 15.03
93945	ID BAR HARNESS	C	$ 13.50
9410BL	COUNTER DISPLAY, FUSE NOT INCLUDED	D	$ 5.10
9414BL	20 AMP FUSE, COUNTER DISPLAY	D	$ 7.93
9415BL	30 AMP FUSE, COUNTER DISPLAY	C	$ 7.17
94236	HARNESS ADAPTER	C	$ 30.50
94237	LED PIGTAIL	W	$ 3.30
94609	MARKER/CLEARANCE PLUG	C	$ 7.53
9462	PIGTAIL FOR 4090 SERIES	D	$ 17.30
94624	LED FIT 'N FORGET MARKER CLEARANCE PLUG	C	$ 6.43
9463	PIGTAIL FOR 4090 SERIES	D	$ 17.87
9464	HARNESS FOR 5010 SERIES	D	$ 34.57
9465	HARNESS FOR 5800 SERIES	D	$ 16.40
9466	CROSSOVER HARNESS FOR 5010	D	$ 130.07
9467	PIGTAIL FOR 4097A	D	$ 40.13
9469	JUMPER HARNESS FOR 5023,5024	D	$ 53.83
9470	SUPER 82 FiVe WIRE PLUG ASSY	B	$ 23.60
94706	LED PL3 ADAPTER PLUG	B	$ 10.00
94706-3	LED PL3 ADAPTER PLUG, BULK	B	$ 9.37
94707	LED PL3 PIGTAIL	B	$ 6.87
94707-3	LED PL3 PIGTAIL, BULK	B	$ 6.40
94718	LED PIGTAIL W/.180 BULLET & # 10 RING TERMINAL	C	$ 5.73
94727	19 SERIES PLUG	C	$ 4.83
94729	19 SERIES PLUG	C	$ 4.97
94736	LED FIT 'N FORGET MARKER CLEARANCE MARKER PLUG	C	$ 10.83
94742	LED FIT 'N FORGET CLEARANCE MARKER PLUG	C	$ 12.13
94750	RIGHT ANGLE STOP/TAIL/ TURN PLUGS W/ADAPTERS	D	$ 21.13

94751	RIGHT ANGLE STOP/TAIL/ TURN PLUGS W/ADAPTERS	C	$ 19.63
94759	LED PL3 PIGTAIL	C	$ 13.93
94760	RIGHT ANGLE STOP/TAIL/ TURN PLUGS W/ADAPTERS	C	$ 21.93
94766	LED FIT AND FORGET REPLACEMENT CONNECTOR	C	$ 10.47
94768	LED FIT AND FORGET STOP/TAIL/ TURN W/ADAPTERS	C	$ 25.93
94768-3	LED FIT AND FORGET STOP/TAIL/ TURN W/ADAPTERS, BULK	C	$ 23.30
94768-P	LED FIT AND FORGET STOP/TAIL/ TURN W/ADAPTERS, PALLET	C	$ 21.00
94769	LED FIT AND FORGET STOP/TAIL/ TURN W/ADAPTERS	C	$ 39.20
94770	LED FIT AND FORGET STOP/TAIL/ TURN W/ADAPTERS	C	$ 32.17
94781	LED 5 M HARNESS	C	$ 26.42
94782	LED 3 M HARNESS	C	$ 20.57
94789	TURN SIGNAL ADAPTER PLUG	C	$ 14.97
94802	RIGHT ANGLE STOP/TAIL/TURN PLUG	C	$ 8.33
94811	MATING PLUG FOR 40756 AND 40757	D	$ 8.07
94812	MATING PLUG FOR 40756	D	$ 7.93
94813	MATING PLUG FOR 40757	D	$ 7.93
94821	19 SERIES PLUG	C	$ 6.03
94831	LED 60 SERIES PIGTAIL S/T/T & BACK-UP PLUG, 16 GAUGE GPT WIRE, 4 PIN, 8"	C	$ 26.23
94837	LLV MODEL 45 S.C.PIGTAIL	D	$ 6.53
94838	LLV CHMSL S.C. PIGTAIL	W	$ 9.03
94839	LLV 60 SERIES P/T/S D.C. PIGTAIL	W	$ 14.03
94840	LLV 60 SERIES SIDE INDICATOR D.C. PIGTAIL	W	$ 12.23
94841	LLV MODEL 45 S/T/T D.C. PIGTAIL	W	$ 8.80
94848	MARKER CLEARANCE PLUGS	D	$ 4.70
94850	MARKER CLEARANCE PLUGS	D	$ 4.60
94851	LLV 60 SERIES SIDE MARKER S.C. PIGTAIL	W	$ 7.10
94853	RIGHT ANGLE STOP/TAIL/TURN PLUG W/ADAPTERS	D	$ 31.77
94854	PLUG FOR 04115 / 04116	W	$ 4.32
94861	LED FIT 'N FORGET PLUG	C	$ 11.23
94862	LED FIT 'N FORGET PLUG	B	$ 4.80
94862-3	LED FIT 'N FORGET PLUG, BULK	B	$ 4.33
94865	RIGHT ANGLE STOP/TAIL/TURN PLUG W/ADAPTERS	W	$ 18.50
94868	RIGHT ANGLE STOP/TAIL/TURN PLUG W/ADAPTERS	C	$ 18.40
94882	RIGHT ANGLE STOP/TAIL/TURN PLUG	C	$ 6.20
94888	LED FIT 'N FORGET MARKER CLEARANCE PLUG	B	$ 4.73
94892	ID BAR HARNESS W/.156 BULLET	C	$ 17.30
94897	RIGHT ANGLE STOP/TAIL/TURN PLUG W/ADAPTERS	D	$ 6.43
94898	ID BAR HARNESS W/.156 BULLET	D	$ 24.43
94902	CLEARANCE MARKER PL10 PIGTAIL	A	$ 3.77
94902-3	CLEARANCE MARKER PL10 PIGTAIL, BULK	A	$ 3.30
94909	MARKER CLEARANCE PLUGS	C	$ 4.50
94916	MARKER CLEARANCE PLUGS	C	$ 4.63
94919	MARKER CLEARANCE PLUGS	C	$ 5.50
94920	MARKER CLEARANCE PLUGS	C	$ 4.60
94922	LICENSE LAMP PLUG	C	$ 2.63
94923	LICENSE LAMP PLUG	C	$ 2.63
94924	RIGHT ANGLE M/C PLUGS	A	$ 4.17
94924-3	RIGHT ANGLE M/C PLUGS, BULK	A	$ 3.77
94925	STOP/TAIL PIGTAIL	B	$ 4.37
94925-3	STOP/TAIL PIGTAIL, BULK	B	$ 3.80
94926	S/T/T PIGTAI	A	$ 4.77

94926-3	S/T/T PIGTAIL, BULK	A	$ 3.97
94931	RIGHT ANGLE STOP/TAIL/TURN PLUG	C	$ 8.93
94932	RIGHT ANGLE STOP/TAIL/TURN PLUG W/ADAPTERS	D	$ 18.37
94937	STOP/TURN SOCKET ASSY	D	$ 8.27
94938	S/T/T SOCKET ASSY	D	$ 11.83
94938-3	S/T/T SOCKET ASSY, BULK	D	$ 11.23
94940	PIGTAIL FOR RECTANGULAR M/C LAMP	A	$ 3.83
94940-3	PIGTAIL FOR RECTANGULAR M/C LAMP, BULK	A	$ 3.63
94948	STOP/TAIL/TURN PLUG W/ADAPTER	W	$ 18.83
94949	STOP/TAIL/TURN PLUG W/ADAPTER	W	$ 18.83
94954	REMOTE WIRING JUMPER	W	$ 7.50
94961	STOP/TURN PLUG	D	$ 5.07
94962	STOP/TURN/TAIL PLUG	D	$ 10.73
94964	RIGHT ANGLE MARKER CLEARANCE PLUG	B	$ 6.37
94966	LED 60 SERIES PIGTAIL S/T/T & BACK-UP PLUG, 16 GAUGE GPT WIRE, 24"	C	$ 80.00
94972	MARKER CLEARANCE PLUGS	C	$ 5.47
94984	RIGHT ANGLE MARKER CLEARANCE PLUG	W	$ 11.10
94991	RIGHT ANGLE TAIL PLUG	C	$ 4.83
94992	RIGHT ANGLE STOP/TAIL PIGTAIL	A	$ 4.20
94992-3	RIGHT ANGLE STOP/TAIL PIGTAIL, BULK	A	$ 3.73
94993	RIGHT ANGLE STOP/TAIL PIGTAIL	A	$ 4.60
94993-3	RIGHT ANGLE STOP/TAIL PIGTAIL, BULK	A	$ 3.97
950	T/S VERT/HORIZ MOUNT BULB REPLACEABLE LAMP W/PARKING LAMP	D	$ 77.27
95001	LED FIT 'N FORGET STOP/TAIL/TURN W/ADAPTERS	C	$ 29.07
95002	LED FIT 'N FORGET STOP/TAIL/TURN W/ADAPTERS	C	$ 45.10
95051	LICENSE LAMP PLUG	W	$ 5.17
95119	PLUG ASSY	C	$ 4.83
95121	POSITION WIRE	D	$ 3.58
95122	GROUND WIRE	D	$ 3.34
95123	STOP WIRE	D	$ 3.34
95124	TURN WIRE	D	$ 3.34
95125	FOG WIRE	D	$ 3.34
9520	GASKET	D	$ 9.67
9521	MOUNTING PAD	W	$ 9.41
9522	GASKET KIT	D	$ 1.77
95220	LED FIT 'N FORGET PLUG	C	$ 18.87
9523	MOUNTING PAD	D	$ 1.70
95306	LED FIT 'N FORGET MARKER CLEARANCE PLUG	C	$ 10.47
95332	19 SERIES PLUG	C	$ 11.23
9536	SIGNAL-STAT LH LED MODULE KIT W/SIDE MARKER	W	$ 153.76
9537	SIGNAL-STAT RH LED MODULE KIT W/SIDE MARKER	W	$ 153.76
95399	LED FIT 'N FORGET STOP/TAIL/TURN W/ADAPTERS	B	$ 67.50
95400	ADAPTER FOR 7" ROUND COMPOSIT HEADLAMP	C	$ 23.20
95407	S/T/T SOCKET ASSY	A	$ 13.10
95410	LED PIGTAIL CLEARANCE MARKER SELF SEAL	B	$ 7.60
95415	STOP/TURN SOCKET ASSY	B	$ 11.23
95424	LED FIT 'N FORGET STOP/TAIL/TURN PLUG	D	$ 16.30
95450	5 PLUG HARNESS W/10" CENTERS	A	$ 29.83
95451	7 PLUG HARNESS W/10" CENTERS	A	$ 39.67
95452	9 PLUG HARNESS W/10" CENTERS	A	$ 49.50
95453	11 PLUG HARNESS W/10" CENTERS	A	$ 59.43

95454	4 PLUG HARNESS W/4" CENTERS	A	$ 23.70
95455	6 PLUG HARNESS W/4" CENTERS	A	$ 32.67
95456	8 PLUG HARNESS W/4" CENTERS	A	$ 41.73
95457	10 PLUG HARNESS W/4" CENTERS	A	$ 46.90
95460	LED 5 PLUG HARNESS W/10" CENTERS	A	$ 37.77
95461	LED 10 PLUG HARNESS W/10" CENTERS	A	$ 54.00
95462	LED 9 PLUG HARNESS W/10" CENTERS	A	$ 68.67
95463	LED 11 PLUG HARNESS W/10" CENTERS	A	$ 83.73
95464	LED 4 PLUG HARNESS W/4" CENTERS	A	$ 29.03
95465	LED FIT 'N FORGET MARKER CLEARANCE MULTIPLE PLUG HARNESS	A	$ 44.83
95466	LED 8 PLUG HARNESS W/4" CENTERS	A	$ 59.67
95467	LED 10 PLUG HARNESS W/4" CENTERS	A	$ 74.23
955	T/S VERT/HORIZ MOUNT BULB REPLACEABLE LAMP W/PARKING LAMP	D	$ 76.07
956AA	NAVISTAR TURN SIGNAL HORIZ MNT BULB REPL. LAMP NAVISTAR #582780C91	D	$ 74.97
957AA	NAVISTAR TURN SIGNAL HORIZ MNT BULB REPL. LAMP NAVISTAR #582779C91	D	$ 77.33
95809	88 SERIES REAR 3 RECEPTACLE HARNESS	D	$ 88.37
95846	ADAPTER FOR 27007 HEADLAMP	D	$ 14.37
95879	88 SERIES5 PLUG UPPER ID BROWN/ WHITE	D	$ 108.67
95910	MULTI PURPOSE MOUNTING HARDWARE	C	$ 2.97
95911	MOUNTING HARDWARE (BOLTS AND NUTS)	C	$ 2.41
960Y100	OEM SWITCH, NAVISTAR REPLACEMENT	C	$ 202.68
960Y101	OEM SWITCH, DOUGLAS AUTOTECH REPLACEMENT	C	$ 204.92
96106	PLUG MALE PIN 2 PIN	A	$ 5.12
96106-3	PLUG MALE PIN 2 PIN, BULK	A	$ 4.60
96107	PLUG MALE PIN 3 PIN	A	$ 5.12
96107-3	PLUG MALE PIN 3 PIN, BULK	A	$ 4.60
96108	PLUG MALE PIN 2 PIN	A	$ 6.53
96108-3	PLUG MALE PIN 2 PIN, BULK	A	$ 5.88
96116	OBSOLETE		
96117	OBSOLETE		
96118	OBSOLETE		
96120	OBSOLETE		
96157	OBSOLETE		
96182	OBSOLETE		
96185	OBSOLETE		
96186	OBSOLETE		
96193	TERMINAL CONNECTOR CLEANER MASTER KIT	C	$ 150.50
96196	BASKET	B	$ 102.03
96197	BASKET - DIVIDER	B	$ 27.90
96198	HOOK FOR PEG BOARD 96196	B	$ 5.47
96199	23" WIRE BASKET KIT	B	$ 207.27
961Y100	OEM SWITCH, NAVISTAR REPLACEMENT	C	$ 202.68
96247	LED PIGTAIL -2 POS P/E S/T/T	W	$ 19.46
96248	19 SERIES PIGTAIL FOR TESTER KITS	W	$ 7.67
96249	PL10 PIGTAIL FOR TESTER KITS	W	$ 9.37
96250	PL3 PIGTAIL FOR TESTER KITS	W	$ 12.83
96251	MALE PIN PIGTAIL FOR TESTER KITS	W	$ 23.38
96252	LED MC PLUG FOR TESTER KITS	W	$ 7.13
96253	.180 RECEPTACLE FOR TESTER KITS	W	$ 8.07
96254	PACKARD METRI-PACK PIGTAIL FOR TESTER KITS	W	$ 9.97
96255	ALLIGATOR CLIP PIGTAIL FOR TESTER KITS	W	$ 42.17

96256	PIGTAIL FOR BATTERY POWER SUPPLY	W	$ 7.37
96256-3	PIGTAIL FOR BATTERY POWER SUPPLY, BULK	W	$ 6.30
96257	POWER SUPPLY 12V FOR TESTER KITS	W	$ 329.10
96258	STORAGE BAG FOR TESTER KITS	W	$ 27.84
96259	LIGHT TESTER KIT W/POWER SUPPLY	W	$ 446.20
96259-3	LIGHT TESTER KIT W/POWER SUPPLY, BULK	W	$ 379.30
96260	LIGHT TESTER KIT W/O POWER SUPPLY	W	$ 164.34
96260-3	LIGHT TESTER KIT W/O POWER SUPPLY, BULK	W	$ 139.69
962Y100	OEM SWITCH, DOUGLAS AUTOTECH REPLACEMENT	W	$ 202.68
962Y101	OEM SWITCH, NAVISTAR REPLACEMENT	W	$ 201.82
962Y102	OEM SWITCH, NAVISTAR REPLACEMENT	C	$ 204.92
963Y100	OEM SWITCH, NAVISTAR REPLACEMENT	C	$ 202.68
963Y102	OEM SWITCH, NAVISTAR REPLACEMENT	C	$ 202.68
964Y100	OEM SWITCH, NAVISTAR REPLACEMENT	C	$ 199.69
96511	QUICK CONNECT BOX W/OUT BOAT MOLD	W	$ 102.17
96512	QUICK CONNECT BOX W/ BOAT MOLD	W	$ 112.06
96630	PIGTAIL HARNESS ADAPTER FOR LED HEADLAMP	B	$ 26.83
96731	OBSOLETE		
9674	SET OF FOUR MAGNETS	W	$ 162.67
9676	LENS FOR 528,529,530	D	$ 16.80
9678A	OBSOLETE		
9680A	AUXILIARY TRAFFIC CONTROL ADVISOR	W	$ 2,023.90
96820	STROBE LIGHT BATTERY	W	$ 241.90
96830	LED HEADLAMP PIGTAIL ADAPTER	W	$ 79.53
96830-3	LED HEADLAMP PIGTAIL ADAPTER, BULK	W	$ 75.57
96904	19 SERIES PLUG	D	$ 1.73
96919	19 SERIES PLUG	D	$ 2.60
96927	GROUND WIRE , 8 GAUGE	C	$ 9.57
96928	60' FRONT MARKER/CLEARANCE HARNESS	C	$ 8.30
96930	SUPER 21 PLUG	B	$ 1.90
96932	SUPER 21 PLUG	D	$ 2.80
96934	SUPER 21 PLUG	W	$ 2.87
96935	SUPER 21 PLUG	D	$ 5.10
96936	SUPER 21 PLUG	W	$ 4.13
96953	120" DOUBLE RECEPTACLE JUMPER HARNESS	C	$ 15.83
96954	236" DOUBLE RECEPTACLE JUMPER HARNESS	C	$ 19.03
96955	3' DOUBLE RECEPTACLE JUMPER HARNESS	C	$ 13.20
96955-3	3' DOUBLE RECEPTACLE JUMPER HARNESS	C	$ 10.83
96959	48" LICENSE HARNESS	C	$ 8.60
96960	6" DOUBLE RECEPTACLE JUMPER HARNESS	C	$ 10.83
96966	30" REAR MARKER/CLEARANCE JUMPER HARNESS	C	$ 9.87
96967	72" LOWER ID/ LICENSE JUMPER HARNESS	C	$ 12.30
96969	MARKER CLEARANCE HARNESS W/SINGLE FEED RECEPTACLE 1681	D	$ 14.60
96970	236" UPPER ID JUMPER HARNESS	C	$ 18.50
96973	48" DOUBLE RECEPTACLE JUMPER HARNESS	C	$ 11.53
96974	72" DOUBLE RECEPTACLE JUMPER HARNESS	C	$ 12.67
96975	168" DOUBLE RECEPTACLE JUMPER HARNESS	C	$ 17.43
96978	168" FRONT MARKER/CLEARANCE HOT WIRE	C	$ 15.80
96979	24" MARKER/CLEARANCE JUMPER HARNESS	C	$ 9.07
96989	ID BAR HARNESS W/.180 BULLET	W	$ 19.60
96990	LED FIT 'N FORGET IDENTIFICATION HARNESS	C	$ 21.23

96992	LED FIT 'N FORGET IDENTIFICATION HARNESS	C	$ 24.73
96993	LED FIT 'N FORGET IDENTIFICATION HARNESS	C	$ 36.07
96995	LED FIT 'N FORGET IDENTIFICATION HARNESS	C	$ 23.73
96996	ID BAR HARNESS W/.180 BULLET	W	$ 22.43
96999	LED FIT 'N FORGET IDENTIFICATION HARNESS	C	$ 25.10
97002	.180 FILLER PLUG	C	$ 0.63
97003	B/U ALARM SWITCH	C	$ 25.33
97005	LED FIT 'N FORGET MARKER CLEARANCE PLUG	C	$ 6.70
97006	LED FIT 'N FORGET MARKER CLEARANCE PLUG	C	$ 16.87
97011	HARNESS CLIP RIGHT ANGLE	D	$ 1.30
9702	MAGNET MOUNTING KIT	D	$ 75.27
97020	4' GONDOLA RACK	W	$ 779.17
97020B	4" GONDOLA DISPLAY; BLACK FRAME WITH BLACK PEGBOARD	W	$ 911.63
97022	DISPLAY PEGS	B	$ 3.47
97025	WIRE Brush KIT	C	$ 35.73
97031	91 SERIES MOUNTING GASKET	C	$ 3.17
97032	MOUNTING GASKET	C	$ 1.57
97034	LED 21 SERIES MOUNTING GASKET	C	$ 1.90
97035	SEALING GASKET	C	$ 4.03
97036	LED 21 SERIES SEALING GASKET	C	$ 4.03
97038	MOUNTING GASKET	C	$ 0.93
97039	MOUNTING GASKET	C	$ 2.20
97046	MOUNTING PAD	C	$ 3.80
9705A	LOW DOME LENS FOR 6600,6610,6800,6810 STROBES	W	$ 69.17
9705B	LOW DOME LENS FOR 6600,6610,6800,6810 STROBES	W	$ 70.80
9705R	LOW DOME LENS FOR 6600,6610,6800,6810 STROBES	W	$ 70.80
9705W	LOW DOME LENS FOR 6600,6610,6800,6810 STROBES	W	$ 73.00
97060	6" DOUBLE RECEPTACLE JUMPER HARNESS	C	$ 13.57
97061	108" DOUBLE RECEPTACLE JUMPER HARNESS	C	$ 18.47
97062	198" DOUBLE RECEPTACLE JUMPER HARNESS	C	$ 21.44
97073	LAMP GASKET	C	$ 1.13
97079	10 SERIES GASKET F/ FLANGE	W	$ 1.30
97080	30 SERIES GASKET F/ FLANGE	W	$ 1.87
97093	GASKET	C	$ 0.73
97094	MOUNTING PAD	C	$ 0.73
97100	LAMP AND CIRCUIT TESTER	A	$ 67.27
97101	CABLE AND CIRCUIT TESTER	A	$ 99.70
97101-3	CABLE AND CIRCUIT TESTER, BULK	A	$ 94.70
9710R	LOW DOME LENS FOR 6600,6610,6800,6810 STROBES	W	$ 75.40
9710W	LOW DOME LENS FOR 6600,6610,6800,6810 STROBES	W	$ 73.44
97126	HARDWARE BAG	W	$ 2.53
97137	StAND FOR LED DISPLAY 97127	D	$ 19.31
97151	HEAVY DUTY TRAILER CORD	B	$ 212.17
97153	HEAVY DUTY TRAILER CORD	B	$ 251.00
97158	REPLACEMENT PLUG	B	$ 28.37
97159	REPLACEMENT PLUG	B	$ 25.23
97160	CORD 12' ABS LECTRACOIL PERMAPLUG	B	$ 305.73
97161	CORD 15' ABS LECTRACOIL PERMAPLUG	B	$ 323.93
9719A	REPLACEMENT LENS STROBE-STAR-234A	W	$ 44.00
9720	REPLACEMENT LENS RED STROBE	W	$ 46.60
97201	ALTERNATING ULTRA FLASH II	B	$ 158.10

9720A	REPLACEMENT LENS AMBER STROBE	W	$ 46.60
9720B	REPLACEMENT LENS BLUE STROBE	W	$ 45.38
9720W	REPLACEMENT LENS CLEAR STROBE	W	$ 46.60
97231	ULTRA FLASH II W/O AUDIBLE SIGNAL	A	$ 142.93
97231-3	ULTRA FLASH II W/O AUDIBLE SIGNAL, BULK	A	$ 130.33
97232	ULTRA FLASH II W/AUDIBLE SIGNAL	A	$ 147.07
97232-3	ULTRA FLASH II W/AUDIBLE SIGNAL, BULK	A	$ 134.17
97233	ULTRA FLASH II MECHANICAL TONE AUDIBLE FLASHER	B	$ 177.57
97235	LED ALTERNATING STROBE FLASH MODULE	B	$ 129.40
97238	LAMP GASKET	C	$ 0.83
9723A	LENS REPLACEMENT FOR 6822A/6823A	W	$ 18.90
97251	LED STROBE FLASH MODULE	C	$ 103.33
97253	LED ELECTRONIC FLASHER MODULE	C	$ 237.70
97254	MODULE 3 PROGRAM 20/30/60 MINUTE	C	$ 190.50
97270	ULTRA FLASH II NON AUDIBLE FLASHER	C	$ 357.30
97271	ULTRA FLASH II AUDIBLE FLASHER	B	$ 364.30
97272	ULTRA FLASH II NON AUDIBLE ALTERNATING FLASHER	B	$ 250.90
97283	LED FLASHER- FORD F SERIES	W	$ 130.87
97300	STANDARD DRL MODULE CD1-A	B	$ 63.57
97302	HEAVY DUTY DRL SYSTEM	W	$ 199.73
97321	OBSOLETE		
97322	2" TEMP GUAGE W/16FT SENSOR	W	$ 360.55
97330	LITE-CHECK TRAILER TESTER 12V	W	$ 3,686.37
97331	OBSOLETE		
97334	SUPER 44 SECURITY FLANGE 7 & 10 GAUGE APPLICATIONS	W	$ 26.57
97337	KIT-MNT,8GA SST SNAP-IN W/GSKT	W	$ 25.73
97340	MDL 35 UPPER STOP PIGTAIL VOLT	W	$ 57.20
97342	MDL 36 PIGTAIL VOLT REGULATOR	W	$ 98.10
97344	MDL33 PIGTAIL 180 RECEPTACLE	W	$ 89.97
97345	MDL33 PIGTAIL 180 RECEPTACLE	W	$ 95.50
97349	MDL10 UPPER STOP PGTL VOLT REG	W	$ 95.50
97360	OBSOLETE		
97361	TRUMPET HORN 12 VOLT ZINC	W	$ 51.00
97364	MDL33 UPPER ID PIGTAIL	W	$ 84.60
97365	MDL33 PITAIL 2 POSTION	W	$ 95.83
97366	MDL33 PL-3 PIGTAIL	W	$ 53.97
97376	SIGNAL-STAT LED DISPLAY BUNDLE	W	$ 2,348.57
97377	TRUCK-LITE LED DISPLAY BUNDLE	W	$ 2,714.60
97378	AUXILIARY WHITE LED DISPLAY BUNDLE	W	$ 2,274.23
97379	Stop/Turn/Tail LED Display Bundle	W	$ 1,354.17
97380	MDL 33-36 LED DISPLAY BUNDLE	W	$ 1,815.50
97381	7" ROUND LED HEADLIGHT DISPLAY BUNDLE	W	$ 2,414.87
97382	INCANDSCENT CSA REPAIR KIT	C	$ 150.53
97383	4x6 LED HEADLIGHT DISPLAY BUNDLE	W	$ 1,959.07
97384	BLACK, LOOK DOWN MIRROR	W	$ 74.87
97388	CRIMPER TOOL	C	$ 50.80
97389	BUTT SPLICE 12-10 GA	C	$ 5.90
97390	BUTT SPLICE 16-14 GA	C	$ 5.00
97391	BUTT SPLICE 22-18 GA	C	$ 4.83
97392	ROADSIDE REPAIR KIT	C	$ 193.10
9740A	OBSOLETE		

97405	5x7 LED HEADLIGHT DISPLAY BUNDLE	W	$ 1,758.33
97406	SS LED VALUE LINE DISPLAY BASE 24" x 39"	W	$ 899.70
97408	TL LED DISPLAY BASE 24" x 17"	W	$ 729.83
97432	HARDWARE PACK FOR 81 SERIES LED WORK LAMP	W	$ 9.93
97437	M35 UPPER ID PIGTAIL	W	$ 82.77
97480	LED PREMIUM LINE DISPLAY BASE 24" X 39"	W	$ 907.57
97482	SIGNAL-STAT LED DISPLAY INSERT	W	$ 1,163.63
97483	TRUCK-LITE LED DISPLAY INSERT	W	$ 1,601.53
97484	AUXILIARY WHITE LED DISPLAY INSERT	W	$ 1,462.73
97485	LED 4" TAIL LIGHTING DISPLAY INSERT	W	$ 488.63
97486	MDL 33-36 LED DISPLAY INSERT	W	$ 1,065.83
97487	7" LED HEADLIGHT DISPLAY INSERT	W	$ 1,606.83
97488	4x6 LED HEADLIGHT DISPLAY INSERT	W	$ 1,165.97
97489	5x7 LED HEADLIGHT DISPLAY INSERT	W	$ 912.43
97492	DISPLAY BASE HD PLUS	W	$ 908.23
97602	LARGE CONVEX MIRROR, SS	D	$ 52.47
97603	LARGE CONVEX MIRROR, BLACK	D	$ 52.13
97606	FULL-BUBBLE WIDE ANGLE CONVEX MIRROR, SS	D	$ 88.00
97609	EXTra LARGE CONVEX MIRROR HEAD, BLACK	D	$ 129.40
97610	EXTra LARGE CONVEX MIRROR HEAD, WHITE	D	$ 129.40
97611	SMALL FLAT GLASS MIRROR HEAD, BLACK	D	$ 23.63
97612	SMALL FLAT GLASS MIRROR HEAD, WHITE	D	$ 23.63
97614	MEDIUM CONVEX MIRROR HEAD OFfSET W/HEATER, SS	D	$ 103.70
97615	MEDIUM CONVEX MIRROR HEAD OFfSET W/HEATER, BLACK	D	$ 102.90
97618	SMALL CONVEX MIRROR ASSY, SS	A	$ 31.27
97619	SMALL CONVEX MIRROR ASSY, BLACK	A	$ 26.97
97621	SMALL CONVEX MIRROR ASSY, BLACK	B	$ 46.77
97622	SMALL FLAT GLASS MIRROR HEAD, BLACK	C	$ 47.27
97623	SMALL FLAT GLASS MIRROR HEAD, WHITE	D	$ 48.63
97624	WEST COAST MIRROR, ALUMINUM	D	$ 99.67
97625	WEST COAST MIRROR, ALUMINUM HEATED	D	$ 167.43
97627	WEST COAST MIRROR, ALUMINUM	A	$ 33.87
97628	WEST COAST MIRROR, WHITE	D	$ 69.20
97629	WEST COAST MIRROR, BLACK	D	$ 69.20
97630	WEST COAST MIRROR, ALUMINUM, HEATED	D	$ 86.90
97631	WEST COAST MIRROR, ALUMINUM, HEATED, LIGHTED	D	$ 136.60
97632	WEST COAST t MIRROR W/WIDE ANGLE, ALUMINUM	D	$ 83.70
97633	WEST COAST MIRROR KIT	D	$ 294.00
97634	WEST COAST MIRROR W/WIDE ANGLE, ALUMINUM	D	$ 185.43
97635	WEST COAST MIRROR, SS	D	$ 137.03
97636	WEST COAST MIRROR, BLACK, SS	D	$ 46.77
97637	WEST COAST MIRROR, WHITE, SS	D	$ 46.77
97643	JR. WEST COAST MIRROR	D	$ 72.27
97644	JR. WEST COAST MIRROR	D	$ 206.23
97650	WEST COAST MIRROR Rib BACK, BLACK, HEATED	D	$ 98.37
97652	WEST COAST JR. MIRROR	D	$ 61.37
97653	LIGHT TRUCK MIRROR HEAD, SS	D	$ 40.30
97654	LIGHT TRUCK MIRROR HEAD, BLACK	D	$ 34.07
97655	LIGHT TRUCK MIRROR HEAD, SS	D	$ 45.37
97656	"OVER THE DOOR" CONVEX MIRROR, SS	D	$ 50.77
97657	LIGHT AND MEDIUM DUTY TRUCK MIRROR, BLACK	D	$ 43.67

97659	UNIVERSAL REPLACEMENT MIRROR HEAD, BLACK	D	$ 66.10
97660	LARGE RECTANGULAR MIRROR HEAD FOR TRIPOD ASSY, WHITE	D	$ 52.90
97661	MEDIUM DUTY TRUCK MIRROR, SS	D	$ 90.00
97662	MEDIUM DUTY TRUCK MIRROR, SS	D	$ 102.30
97664	PASSENGER AND CARGO VAN ASSY SS	D	$ 245.67
97665	PASSENGER AND CARGO VAN ASSY PAINTED WHITE	D	$ 131.03
97666	SCHOOL BUS FENDER BRACKET	W	$ 105.60
97667	REAR SPECIALTY APPLICATIONS SS, GRAY	D	$ 174.33
97669	STEP VAN MIRROR WHITE PAINTED STEEL	D	$ 168.80
97671	WIDE ANGLE FLAT AND CONVEX MIRROR	D	$ 43.57
97673	WIDE ANGLE FLAT AND CONVEX MIRROR	D	$ 44.57
97674	WIDE ANGLE FLAT AND CONVEX MIRROR	D	$ 53.30
97676	WIDE ANGLE FLAT AND CONVEX MIRROR	D	$ 35.63
97678	COAST MIRROR LIGHT DUTY TRIPOD ASSY, SS	D	$ 103.27
97680	OE STYLE TRIPOD ASSY, WHITE PAINTED STEEL	D	$ 92.13
97681	HEAVY DUTY Door/FENDER ASSY, SS	D	$ 230.60
97682	INTERNAL ELBOW TRIPOD ASSY, SS	D	$ 255.30
97686	HEAVY DUTY TRIPOD FENDER ASSY	D	$ 200.90
97687	FENDER MOUNT SHORTENED TRIPOD KIT	D	$ 205.83
97688	HOOD MOUNTed ASSY KIT, SS	D	$ 235.73
97693	WEST COAST MIRROR KIT, CHROME	D	$ 392.87
97694	WEST COAST MIRROR KIT, BLACK	D	$ 350.73
97695	MIRROR KIT	D	$ 142.50
97701	GASKET	W	$ 1.27
97706	LENS GASKET	W	$ 1.77
97718	"L" BRACKET FOR CONVEX MIRROR HEAD	D	$ 8.23
97719	UNIVERSAL BRACKET	D	$ 32.53
9771A	LENS FOR 9770A	W	$ 37.63
97720	6" MOUNTING ARM	D	$ 27.87
97721	REPLACEMENT ADJUSTABLE MIRROR BRACE	D	$ 94.47
97722	REPLACEMENT ADJUSTABLE MIRROR BRACE	D	$ 93.57
97724	LENS AND GASKET KIT	D	$ 19.27
97725	SAFETY YOKE BRACKET, SS	D	$ 76.63
97726	SAFETY YOKE BRACKET, BLACK	D	$ 56.97
97730	EXTENSION BRACKET	D	$ 36.03
97731	180 DEGREE TURN EXTENSION ARM	D	$ 29.20
97732	UNIVERSAL CLAMP	D	$ 17.77
97733	REPLACEMENT BRACKET	D	$ 11.70
97748	7.5 OFfSET ELBOW EXTENSION	C	$ 36.27
97750	VAN AND R.V.SWING-AWAY MIRROR ASSY, CHROME PLATED PLASTIC	D	$ 92.83
9779	OBSOLETE		
97794	MIRROR HEAVY DUTY 6 1/4"X 9 1/2"	D	$ 53.20
97799	DOCUMENT HOLDER LID	W	$ 19.63
9779A	OBSOLETE		
97802	SMALL CONVEX MIRROR ASSY	D	$ 24.93
97803	MEDIUM CONVEX MIRROR HEAD, SS	A	$ 43.50
97803-3	MEDIUM CONVEX MIRROR HEAD, SS, BULK	A	$ 37.87
97804	MEDIUM CONVEX MIRROR HEAD, BLACK	A	$ 41.27
97805	LARGE RECTANGULAR MIRROR HEAD FOR TRIPOD ASSY, SS	W	$ 68.60
97806	WEST COAST MIRROR Rib BACK, WHITE	D	$ 51.17
97807	LIGHT TRUCK MIRROR HEAD, WHITE	D	$ 34.07

97808	WEST COAST MIRROR BUBBLE BACK, WHITE	D	$ 55.17
97809	WEST COAST MIRROR HEAD, HEATED	D	$ 117.03
97811	WEST COAST MIRROR Rib BACK, BLACK	D	$ 51.17
97812	WEST COAST MIRROR, SS	D	$ 58.40
97814	MEDIUM CONVEX MIRROR HEAD, SS, OFFSET MOUNT	D	$ 44.60
97815	MEDIUM CONVEX MIRROR, SS	A	$ 33.23
97816	MEDIUM CONVEX MIRROR, BLACK	D	$ 32.03
97817	MEDIUM CONVEX MIRROR, WHITE	C	$ 48.30
97819	SMALL CONVEX MIRROR HEAD, SS	A	$ 42.47
97820	SMALL CONVEX MIRROR HEAD, BLACK	C	$ 46.03
97822	WEST COAST MIRROR	B	$ 89.03
97823	UNIVERSAL MOUNTING KIT, SS	D	$ 13.47
97826	WEST COAST MIRROR, LIGHTED	D	$ 136.17
97827	WEST COAST MIRROR, HEATED, LIGHTED	D	$ 196.00
97828	BELL MOUNT FENDER BRACKET, SS	D	$ 52.93
97829	TRIPOD MOUNT BRACKET	D	$ 174.87
97831	FULL-BUBBLE WIDE ANGLE CONVEX MIRROR, BLACK	D	$ 90.20
97835	WEST COAST MIRROR, GRAY	D	$ 129.40
97836	WEST COAST MIRROR, SS	D	$ 74.80
97837	WEST COAST MIRROR, SS, HEATED	D	$ 111.13
97839	WEST COAST MIRROR, ALUMINUM ECONOMY	D	$ 52.57
97840	MOTORIZED WEST COAST MIRROR HEATED	D	$ 675.63
97843	RIDGE MOUNT BRACKET, SS	D	$ 246.73
97845	HEATING ELEMENT	D	$ 39.60
97846	NON-MOTORIZED WEST COAST MIRROR, HEATED, LIGHTED	D	$ 307.07
97847	WIDE ANGLE FLAT AND CONVEX MIRROR	D	$ 58.97
97848	WIDE ANGLE FLAT AND CONVEX MIRROR	D	$ 57.97
97849	UNIVERSAL MOUNTING KIT, BLACK	D	$ 21.10
97852	OE STYLE TRIPOD ASSY, SS	D	$ 117.97
97860	WEST COAST MIRROR, ALUMINUM	D	$ 29.20
97861	WEST COAST MIRROR, SS	D	$ 69.03
97862	STEP AND COMMERCIAL VAN ASSY SS	D	$ 202.37
97863	Cross VIEW CONVEX MIRROR, SS	D	$ 158.17
97865	"OVER THE DOOR" CONVEX MIRROR, SS	D	$ 90.87
97866	WEST COAST MIRROR, SS, HEATED	D	$ 139.67
97869	OFfSET ELBOW EXTENSION, SS	C	$ 33.03
97872	SMALL CONVEX MIRROR ASSY	D	$ 26.03
97876	90 DEGREE MOUNTING BRACKET	D	$ 14.73
97882	POLYBAG HOOK; FOR GONDOLA DISPLAY	W	$ 2.67
97883	BASKET HOOK; FOR GONDOLA DISPLAY	W	$ 6.50
97912	HDWR-#10 RING TERM/25 PACK	C	$ 7.20
97913	HARNESS CLIP F/3 PLUG CONE MOLD	D	$ 2.30
97920	4" GONDOLA DISPLAY; BLACK FRAME WITH WHITE SLAT WALL	W	$ 1,582.77
97920B	4" GONDOLA DISPLAY; BLACK FRAME WITH BLACK SLAT WALL	W	$ 1,582.77
97921	12 SERIES LAMP GASKET	D	$ 1.03
97925	12 SERIES GASKET, BRACKET	D	$ 2.00
97927	MOUNTING GASKET	D	$ 1.20
97929	MOUNTING GASKET	C	$ 13.47
97933	" O" RING	D	$ 3.03
97940	NYK-77 COMPOUND 8 OZ CAN	D	$ 15.23
97943	NYK-77 1 QUART CAN	D	$ 34.80

97944	NYK-77 COMPOUND 2 OZ. TUBE	A	$ 9.97
97944-1	NYK-77 COMPOUND 2 OZ. TUBE, DISPLAY	W	$ 16.10
97944-3	NYK-77 COMPOUND 2 OZ. TUBE, BULK	A	$ 9.03
97945	RETAINING RING	C	$ 4.93
97946	MULTI-PURPOSE LUBRICANT SPRAY	W	$ 45.33
97946-3	MULTI-PURPOSE LUBRICANT SPRAY, BULK	W	$ 40.80
97947	SNAP RING	W	$ 1.37
97948	NYK-77 COMPOUND 14 OZ CartRIDGE	D	$ 20.47
97956	MAIN RETRO FIT/REPAIR HARNESS	C	$ 16.37
97960	DOCUMENT HOLDER COMPLETE,	A	$ 17.23
97960-3	DOCUMENT HOLDER COMPLETE, BULK	A	$ 15.57
97960-P	DOCUMENT HOLDER COMPLETE, PALLET	A	$ 14.03
97980	MULTI PURPOSE REPLACEMENT HSNG	B	$ 21.33
97987	GASKET	W	$ 1.63
97989	REPLACEMENT HSNG	W	$ 30.00
98001R	RECTANGULAR REFLECTOR 1-7/8" WIDE	A	$ 3.13
98001R3	RECTANGULAR REFLECTOR 1-7/8" WIDE, BULK	A	$ 2.67
98001Y	RECTANGULAR REFLECTOR 1-7/8" WIDE	A	$ 3.13
98001Y3	RECTANGULAR REFLECTOR 1-7/8" WIDE, BULK	A	$ 2.67
98002R	RECTANGULAR REFLECTOR 1-7/8" WIDE	A	$ 4.23
98002Y	RECTANGULAR REFLECTOR 1-7/8" WIDE	A	$ 4.23
98002Y3	RECTANGULAR REFLECTOR 1-7/8" WIDE, BULK	A	$ 4.03
98003R	RECTANGULAR REFLECTOR 1-1/4" WIDE	A	$ 1.77
98003R3	RECTANGULAR REFLECTOR 1-1/4" WIDE, BULK	A	$ 1.47
98003RB	COMPACT REFLECTOR, DISPLAY BOX	D	$ 2.10
98003Y	RECTANGULAR REFLECTOR 1-1/4" WIDE	A	$ 1.77
98003Y3	RECTANGULAR REFLECTOR 1-1/4" WIDE, BULK	A	$ 1.47
98003YB	COMPACT REFLECTOR, DISPLAY BOX	D	$ 2.10
98004R	3" SCREW ON REFLECTOR	C	$ 4.17
98004Y	3" SCREW ON REFLECTOR	C	$ 4.17
98006C	3" CENTER SCREW ON REFLECTOR	D	$ 2.53
98006R	3" CENTER SCREW ON REFLECTOR	A	$ 2.20
98006R3	3" CENTER SCREW ON REFLECTOR, BULK	A	$ 1.93
98006Y	3" CENTER SCREW ON REFLECTOR	A	$ 2.20
98006Y3	3" CENTER SCREW ON REFLECTOR, BULK	A	$ 1.93
98013	NYK-77 5 OZ TUBE	A	$ 13.80
98020	24" WHITE PEGBOARD ENDCAP	W	$ 668.20
98020B	24" BLACK PEGBOARD ENDCAP	W	$ 668.20
98021	24"X10" GONDOLA SHELF	W	$ 106.20
98022	24"X12" GONDOLA SHELF	W	$ 116.20
98031R	2" WIDE OVAL REFLECTOR	C	$ 2.53
98031R3	2" WIDE OVAL REFLECTOR, BULK	C	$ 2.20
98031Y	2" WIDE OVAL REFLECTOR	C	$ 2.53
98031Y3	2" WIDE OVAL REFLECTOR, BULK	C	$ 2.20
98033R	HEXAGON REFLECTOR	C	$ 5.23
98033Y	HEXAGON REFLECTOR	C	$ 5.23
98034R	HEXAGON REFLECTOR W/ CHROME	B	$ 12.03
98034Y	HEXAGON REFLECTOR W/ CHROME	B	$ 12.03
98035R	RECTANGULAR REFLECTOR	D	$ 3.77
98035R3	RECTANGULAR REFLECTOR, BULK	D	$ 3.40
98035Y	RECTANGULAR REFLECTOR	C	$ 3.77

98035Y3	RECTANGULAR REFLECTOR, BULK	C	$ 3.40
98100	REFLECTIVE TAPE 2" x 150' ROLL, WHITE	B	$ 444.70
98100-3	REFLECTIVE TAPE 2" x 150' ROLL, WHITE, BULK	B	$ 422.43
98101	REFLECTIVE TAPE 2" x 150' ROLL, RED/WHITE	A	$ 422.07
98101-3	REFLECTIVE TAPE 2" x 150' ROLL, RED/WHITE, BULK	A	$ 401.00
98102	REFLECTIVE TAPE 3" x 150' ROLL, RED/WHITE	A	$ 667.07
98104	REFLECTIVE TAPE STRIP 2" x 18", RED/WHT	B	$ 4.97
98104-3	REFLECTIVE TAPE STRIP 2" x 18", RED/WHT, BULK	B	$ 4.70
98105	REFLECTIVE TAPE WHITE 2" X 12" STRIP	B	$ 3.30
98107	REFLECTIVE TAPE RED/WHITE 1-1/2" X 150' ROLL	B	$ 333.50
98108	REFLECTIVE TAPE RED/WHITE 2" X 54" STRIP	B	$ 14.13
98111	REFLECTIVE TAPE 2" RED	B	$ 374.47
98113	REFLECTIVE TAPE 2" x 24" RED/ WHITE STRIP	D	$ 12.33
98126	REFLECTIVE TAPE 2" X 150' ROLL, WHITE	A	$ 343.10
98127	REFLECTIVE TAPE 2" X 150' ROLL, RED/WHITE	A	$ 286.63
98127-3	REFLECTIVE TAPE 2" X 150' ROLL, RED/WHITE, BULK	A	$ 257.97
98136	REFLECTIVE TAPE 2" X 18" STRIP, RED/WHITE	C	$ 4.97
98137	REFLECTIVE TAPE 2" X 18" STRIP, WHITE	C	$ 3.33
98138	REFLECTIVE TAPE 21-1/2" X 100" RED/WHITE STRIP	A	$ 12.20
98139	REFLECTIVE TAPE 21-1/2" X 100" STRIP, RED/WHITE	C	$ 20.73
98144	REFLECTIVE TAPE W/O UNDERRIDE,48' TRAILER KIT	A	$ 189.67
98146	REFLECTIVE TAPE 2" X 150" ROLL, RED/WHITE KISS CUT	A	$ 374.47
98153	12" x 1" SCREW ON REFLECTOR	B	$ 3.53
98153-3	12" x 1" SCREW ON REFLECTOR, BULK	B	$ 3.10
98154R	12" x 1" SCREW ON REFLECTOR	B	$ 3.53
98154R3	12" x 1" SCREW ON REFLECTOR, BULK	B	$ 3.10
98155	11" X 1 VERTICAL SCREW ON REFLECTOR	B	$ 3.60
98165	OEM GRADE REFLECTIVE TAPE 2" X 150' ROLL "SCHOOL BUS YELLOW"	W	$ 462.83
98165-3	OEM GRADE REFLECTIVE TAPE 2" X 150' ROLL "SCHOOL BUS YELLOW",BULK	W	$ 396.77
98167	OEM GRADE REFLECTIVE TAPE 2" X 150' ROLL "SCHOOL BUS YELLOW"	C	$ 231.40
98167-3	OEM GRADE REFLECTIVE TAPE 2" X 150' ROLL "SCHOOL BUS YELLOW",BULK	C	$ 198.30
98168	RETROFIT Grade REFLECTIVE TAPE 2" X 150' ROLL "SCHOOL BUS YELLOW"	C	$ 351.33
98170	RETROFIT Grade REFLECTIVE TAPE 1" X 150' ROLL "SCHOOL BUS YELLOW"	C	$ 175.63
98175R	REFLECTIVE TAPE 3" ROUND	B	$ 3.10
98175R3	REFLECTIVE TAPE 3" ROUND, BULK	B	$ 2.73
98175RB	REFLECTIVE TAPE 3" ROUND, DISPLAY BOX	B	$ 3.47
98175Y	REFLECTIVE TAPE 3" ROUND	B	$ 3.10
98175Y3	REFLECTIVE TAPE 3" ROUND, BULK	B	$ 2.73
98175YB	REFLECTIVE TAPE 3" ROUND, DISPLAY BOX	B	$ 3.47
98176R	REFLECTIVE TAPE 2 x 3.5" RECTANGULAR	B	$ 2.53
98176R3	REFLECTIVE TAPE 2 x 3.5" RECTANGULAR, BULK	B	$ 2.33
98176RB	REFLECTIVE TAPE 3" ROUND, DISPLAY BOX	B	$ 2.97
98176Y	REFLECTIVE TAPE 2 x 3.5" RECTANGULAR	B	$ 2.53
98176Y3	REFLECTIVE TAPE 2 x 3.5" RECTANGULAR, BULK	B	$ 2.33
98176YB	REFLECTIVE TAPE 2 x 3.5" RECTANGULAR	B	$ 2.97
98180	REFLECTIVE TAPE STRIAIGHT TRUCK APPLICATION RED/WHITE 2" X 50' ROLL	A	$ 124.70
99001R	10 SERIES M/C LENS	C	$ 1.80
99005C	20 SERIES ROUND LENS	C	$ 3.57
99005R	20 SERIES ROUND LENS	C	$ 3.57
99007R	80 SERIES ROUND LENS	C	$ 2.70
99007R3	80 SERIES ROUND LENS, BULK	C	$ 2.50

99008C	80 SERIES B/U LENS	C	$ 3.67
99008R	80 SERIES ROUND LENS	C	$ 3.53
99008Y	80 SERIES ROUND LENS	C	$ 3.53
99009Y	70 SERIES TURN LENS	C	$ 5.00
99010C	40 SERIES B/U LENS W/HSNG.	C	$ 10.77
99010R	40 SERIES CHMSL LENS W/HSNG.	C	$ 10.30
99010R3	40 SERIES CHMSL LENS W/HSNG., BULK	C	$ 9.77
99010Y	40 SERIES CHMSL LENS W/HSNG.	C	$ 10.30
99011R	60 SERIES OVAL TAIL LENS	B	$ 4.27
99011Y	60 SERIES OVAL TAIL LENS	B	$ 4.27
99012R	18 SERIES LENS AND HSNG.	D	$ 5.10
99012Y	18 SERIES LENS AND HSNG.	D	$ 5.10
99021R	91 SERIES LENS AND HSNG.	D	$ 33.53
99021Y	91 SERIES LENS AND HSNG.	D	$ 33.53
99027R	OBSOLETE		
99027Y	26 SERIES LENS REPLACEMENT	D	$ 2.33
99034Y	2-3/8" ROUND LENS	C	$ 3.67
99039R	26 SERIES BEEHIVE LENS	C	$ 2.40
99039Y	26 SERIES BEEHIVE LENS	C	$ 2.40
99041R	3-1/2" OBLONG LENS	C	$ 4.00
99041Y	3-1/2" OBLONG LENS	C	$ 4.00
99043R	OBLONG LENS	C	$ 7.73
99043Y	OBLONG LENS	C	$ 7.73
99050R	4" OBLONG LENS	B	$ 3.40
99050Y	4" OBLONG LENS	B	$ 3.60
99051R	26 SERIES OBLONG LENS	C	$ 4.00
99051Y	26 SERIES OBLONG LENS	C	$ 4.00
99063R	26 SERIES CAB MARKER LENS	B	$ 3.40
99063Y	26 SERIES CAB MARKER LENS	B	$ 3.40
99066Y	26 SERIES CAB MARKER LENS	A	$ 9.20
99067Y	26 SERIES CAB MARKER LENS	C	$ 5.63
99074R	TAIL LENS	D	$ 4.57
99080C	80 SERIES 5" DOME LENS	D	$ 3.60
99082R	80 SERIES 5" DOME LENS	D	$ 5.52
99083R	TAIL LENS	D	$ 4.87
99087R	SIGNAL LENS	D	$ 5.57
99088C	7" LENS	C	$ 11.93
99090R	70 SERIES TAIL LENS	B	$ 4.10
99090Y	70 SERIES TAIL LENS	B	$ 4.10
99095C	80 SERIES B/U LENS	D	$ 8.37
99107Y	26 SERIES LENS REPLACEMENT	D	$ 18.57
99120B	LENS SHIELD	D	$ 8.67
99120C	LENS SHIELD	D	$ 8.67
99120R	LENS SHIELD	D	$ 8.67
99126R	80 SERIES SUBMERSIBLE TAIL LENS	W	$ 21.77
99127R	80 SERIES SUBMERSIBLE TAIL LENS	W	$ 13.10
99152	LENS REPLACEMENT WIDE TURN ARROW	C	$ 42.42
99160Y	LENS FOR 26311Y/26313Y	D	$ 7.23
99165Y	LENS FOR 25762Y	C	$ 3.00
99167Y	LENS FOR 90325Y	C	$ 33.87
99168C	LENS FOR 90327C	C	$ 36.90

99168R	LENS FOR 90327R	C	$ 34.13
99168Y	LENS FOR 90327Y	C	$ 34.13
99169R	LENS FOR 90326R	C	$ 33.50
99169Y	LENS FOR 90326Y	C	$ 33.50
99170R	LENS FOR 26353R	C	$ 9.63
99170Y	LENS FOR 26353Y	C	$ 9.63
99171R	LENS FOR 26354R	C	$ 8.23
99171Y	LENS FOR 26354Y	C	$ 8.23
99172	LENS FOR 90326R/Y	D	$ 5.90
99176C	LENS FOR 80423C	C	$ 6.70
99184C	60 SERIES LENS AND HSNG. ASSY	D	$ 10.43
99184R	60 SERIES LENS AND HSNG. ASSY	D	$ 10.43
99184Y	60 SERIES LENS AND HSNG. ASSY	D	$ 10.43
99190C	OBSOLETE		
99193Y	LENS FOR LIGHT BAR 92670Y,92671Y,92672Y,92673Y	W	$ 172.19
99200C	BEACON LENS FOR 92842Y,92643Y,92644Y	D	$ 145.63
99208C	LOWER OUTBOARD LENS FOR 92675Y,92676Y	D	$ 315.21
99220Y	HIGH PROFILE LENS FOR 92572Y	W	$ 78.23
99221Y	LENS FOR 92572Y,92573Y	W	$ 78.23
99226Y	END CAP LENS FOR 92684 AND 92685 SER	W	$ 227.43
99227Y	END CAP LENS FOR 92684 AND 92685 SER	W	$ 227.43
99233C	84 SERIES LENS FOR 4 FT FLAT	W	$ 41.76
99234C	84 SERIES LENS FOR 2 FT FLAT	W	$ 31.76
99235C	84 SERIES LENS FOR 4 FT CORNER	W	$ 41.76
99236C	84 SERIES LENS FOR 2 FT CORNER	W	$ 31.76
99238R	LENS FOR 2660	D	$ 2.18
99238Y	LENS FOR 2660A	D	$ 2.18
99252Y	LOW PROFILE LENS, YELLOW	A	$ 12.72
9930	CABLE W/WEATHERPROOF CONNECTOR	D	$ 158.30
9940	CABLE W/WEATHERPROOF CONNECTOR	W	$ 260.70
9944	CABLE W/AMP CONNECTOR	D	$ 81.13

VENCO VENTURO INDUSTRIES LLC

VENTURO RUGGED. RELIABLE. REAL.

HYDRAULIC SERVICE CRANES

HT66KX

SUGGESTED SELLING PRICE LIST

SPECIFICATIONS			
MODEL	MAX CAPACITY (LB)	FT / LB RATING	WIRE ROPE
HT66KX	11,000	66,000	100 FT. OF 7/16”

STANDARD EQUIPMENT	
MOMENT OVERLOAD SHUTOFF SYSTEM	25 FT PLUG-IN COMPARTMENT REMOTE CONTROL PENDANT
ANTI-TWO BLOCKING	SWIVEL LOAD BLOCK WITH SAFETY HOOK
WIRE ROPE WITH SAFETY HOOK (SEE ABOVE)	POWER ROTATION – 400 DEGREES

PRICES							
			BOOM EXTENSION				
MODEL	CONTROLS	BOOM LENGTH	POWER	MANUAL	INSTALL WEIGHT	SHIPPING WEIGHT	SELLING PRICE
HT66KX	PROPORTIONAL	12’ – 25’	25’	0’	2600#	2750#	$21,720.00
HT66KX-30	PROPORTIONAL	13.5’ – 30’	30’	0’	2800#	2950#	$22,560.00

OPTIONS		
RADIO REMOTE CONTROLS WITH ONBOARD DIAGNOSTIC SYSTEM		
PROPORTIONAL CONTROLS – Wireless pistol grip transmitter and compartment mounted receiver with troubleshooting error code display. Includes battery recharger.	**In Lieu of Standard Corded Remote**	$1,024.00
	In addition to Standard Corded Remote	$2,020.00
ENGINE START/STOP & THROTTLE CONTROL		
Includes pendant switches, wiring harness and relays to supply a 12 volt or ground signal to the engine compartment. Does not include an auxiliary electric or vacuum speed controller.		$244.00
CUSTOM PAINT	**PART #**	
Paint code/sample required	24838	$368.00

PUMPS (hoses/fittings not included)				
MODEL	PART#	GPM	PUMP TYPE	SELLING PRICE
HT66KX-P	19296-10.0	12 @ 1200 RPM	B FLANGE, 7/8” – 13 SPLINE	$560.00

RESERVOIRS (hoses/fittings not included)			
DESCRIPTION	PART #	WEIGHT	SELLING PRICE
40 GAL. BULKHEAD MOUNT	22998	130	$1,078.00
NOTE: RESERVOIRS INCLUDE 100 MESH SUCTION SCREEN, 10 MICRON RETURN FILTER, RETURN AND SUPPLY PRESSURE GAUGES, SIGHT GLASS AND BREATHER CAP.			

F.O.B: CINCINNATI, OHIO

EFFECTIVE DATE: FEBRUARY 2, 2016 **REV: FEBRUARY 2, 2016** **SUBJECT TO CHANGE WITHOUT NOTICE**

VENCO VENTURO INDUSTRIES LLC

VENTURO RUGGED. RELIABLE. REAL.

HYDRAULIC SERVICE CRANES

HT66KX

SUGGESTED SELLING PRICE LIST

OUTRIGGER PACKAGES				
DESCRIPTION	PART #	INSTALL WEIGHT	SHIPPING WEIGHT	SELLING PRICE
FOR VENTURO HT66 CRANE BODY: Hydraulic out, hydraulic down. **Full width double mounting tubes permit 100% stability in all rotation zones.** 72" crane side extension, 48" opposite side extension, 214" total spread, 94" retracted. Vertical travel: 20" hydraulic stroke. Bolt-on, adjustable legs. Includes 4 way control valve and concealed hydraulic hoses.	27634-PHX-SL	1170 lbs	1255 lbs	$6,288.00
Same as 27634-PHX-LL above with Vertical travel of 30"	27634-PHX-LL	1190 lbs	1310 lbs	$6,288.00
FOR NON-VENTURO CRANE BODIES: Hydraulic out, hydraulic down. **Full width single mounting tube** with 72" crane side extension, 0" opposite side extension, 154" total spread, 94" retracted. Vertical travel: 30" hydraulic stroke. Bolt-on, adjustable legs. Includes 3 way control valve and concealed hydraulic hoses.	27695-PHX-LL	790 lbs	855 lbs	$5,444.00
Same as 27685-PHX-LL above with Vertical travel of 20"	27695-PHX-SL	770 lbs	835 lbs	$5,444.00

OUTRIGGER PACKAGES FOR VENTURO HT CRANE BODIES – All of the above Outrigger Packages are available for Venturo HT Crane Bodies. Installation of outrigger cross tube is included at no additional charge. 24962 Front outriggers may be required for additional stability.
SEE BELOW

FRONT OUTRIGGER PACKAGES (Required for full stability in all rotation zones)				
DESCRIPTION	PART #	INSTALL WEIGHT	SHIPPING WEIGHT	SELLING PRICE
Manual pullouts, **hydraulic down**. Full width mounting tube 6" x 4" x 81", two pullouts (36" curbside 12" streetside) total spread of 143", retracted 95", vertical travel of 30", includes 2 way control valve and hoses.	24962-PH	410#	475#	$3,680.00
Manual pullouts, **manual crank down**. Full width mounting tube 6" x 4" x 81", two pullouts (36" curbside 12" streetside) total spread of 142", retracted 94", vertical travel of 13 1/2" pin adjustment plus 12" crank adjustment.	24962-CD	315#	380#	$1,564.00

MOUNTING PEDESTALS			
DESCRIPTION	PART #	WEIGHT	SELLING PRICE
Mounting Pedestal – 36” High – For platform body	27656-36	376#	$1,308.00
BOOM REST			
DESCRIPTION	PART #	WEIGHT	SELLING PRICE
BOOM REST – Adjustable 18” – 26” – For utility body	20381-1	48#	$276.00

F.O.B: CINCINNATI, OHIO

EFFECTIVE DATE: JUNE 22, 2015 **REV: AUGUST 5, 2015** **SUBJECT TO CHANGE WITHOUT NOTICE**

VENCO VENTURO INDUSTRIES LLC

VENTURO RUGGED. RELIABLE. REAL.

HYDRAULIC SERVICE CRANES

HT50KX

SUGGESTED SELLING PRICE LIST

SPECIFICATIONS			
MODEL	MAX CAPACITY (LB)	FT / LB RATING	WIRE ROPE
HT50KX	8,000	50,000	100 FT. OF 3/8”

STANDARD EQUIPMENT	
MOMENT OVERLOAD SHUTOFF SYSTEM	25 FT PLUG-IN COMPARTMENT REMOTE CONTROL PENDANT
ANTI-TWO BLOCKING	SWIVEL LOAD BLOCK WITH SAFETY HOOK
WIRE ROPE WITH SAFETY HOOK (SEE ABOVE)	POWER ROTATION – 400 DEGREES

PRICES							
			BOOM EXTENSION				
MODEL	CONTROLS	BOOM LENGTH	POWER	MANUAL	INSTALL WEIGHT	SHIPPING WEIGHT	SELLING PRICE
HT50KX	NON-PROP	10’ – 20’	6’	4’	1925#	2125#	$18,920.00
HT50KX-P	PROPORTIONAL	10’ – 20’	10’	0’	1925#	2125#	$20,940.00
HT50KX-25	PROPORTIONAL	12’ – 24’ 10”	13’	0’	2125#	2325#	$21,432.00

OPTIONS		
RADIO REMOTE CONTROLS WITH ONBOARD DIAGNOSTIC SYSTEM		
PROPORTIONAL CONTROLS – Wireless pistol grip transmitter and compartment mounted receiver with troubleshooting error code display. Includes battery recharger.	**In Lieu of Standard Corded Remote**	$1,024.00
	In addition to Standard Corded Remote	$2,020.00
NON-PROPORTIONAL - Wireless pistol grip transmitter and compartment mounted receiver with troubleshooting error code display.	**In Lieu of Standard Corded Remote**	$928.00
	In addition to Standard Corded Remote	$1,324.00
ENGINE START/STOP & THROTTLE CONTROL		
Includes pendant switches, wiring harness and relays to supply a 12 volt or ground signal to the engine compartment. Does not include an auxiliary electric or vacuum speed controller. (Available only with Proportional Controls)		$244.00
CUSTOM PAINT	**PART #**	
Paint code/sample required	24838	$368.00

PUMPS (hoses/fittings not included)

MODEL	PART#	GPM	PUMP TYPE	SELLING PRICE
HT50KX	19296-2.64	3.0 @ 1150 RPM	A FLANGE, 5/8” – 9 SPLINE	$296.00
HT50KX-P	19296-10.0	12 @ 1200 RPM	B FLANGE, 7/8” – 13 SPLINE	$560.00

RESERVOIRS (hoses/fittings not included)

DESCRIPTION	PART #	WEIGHT	SELLING PRICE
10 GAL. BULKHEAD MOUNT	19294	49	$508.00
25 GAL. BULKHEAD MOUNT	22785	87	$1,043.00

NOTE: RESERVOIRS INCLUDE 100 MESH SUCTION SCREEN, 10 MICRON RETURN FILTER, RETURN AND SUPPLY PRESSURE GAUGES, SIGHT GLASS AND BREATHER CAP.

F.O.B: CINCINNATI, OHIO

EFFECTIVE DATE: JUNE 22, 2015 **REV: AUGUST 5, 2015** **SUBJECT TO CHANGE WITHOUT NOTICE**

VENCO VENTURO INDUSTRIES LLC

VENTURO RUGGED. RELIABLE. REAL.

HYDRAULIC SERVICE CRANES

HT50KX

SUGGESTED SELLING PRICE LIST

OUTRIGGER PACKAGES				
DESCRIPTION	PART #	INSTALL WEIGHT	SHIPPING WEIGHT	SELLING PRICE
Manual pullout, manual crank down. Full width mounting tube 6" x 8" x 81", single crane side 48" pullout with polyurethane rollers, total spread of 142", retracted 94", vertical travel: 14" pin adjustment plus 12" crank adjustment. Bolt-on, adjustable legs.	25100-CD	450#	515#	$1,932.00
Manual pullout, hydraulic down. Full width mounting tube 6" x 8" x 81", single crane side 48" pullout with polyurethane rollers, total spread of 142", retracted 94", vertical travel: 20" hydraulic stroke. Bolt-on, adjustable legs. Includes 2 way control valve, selector valve and concealed hydraulic hoses.	25100-PH-SL	490#	555#	$3,772.00
Same as above with 30" hydraulic stroke at no additional charge	25100-PH-LL	510#	575#	$3,772.00
Hydraulic out, hydraulic down. Full width mounting tube 6" x 8" x 81", single crane side 48" hydraulic extension, total spread of 142", retracted 94", vertical travel: 20" hydraulic stroke. Bolt-on, adjustable legs. Includes 4 way control valve, selector valve and concealed hydraulic hoses.	25100-PHX-SL	590#	655#	$4,716.00
Same as above with 30" hydraulic stroke at no additional charge	25100-PHX-LL	610#	675#	$4,716.00
DUAL TUBE MODELS AVAILABLE FOR CENTER MOUNT CRANE APPLICATIONS (Contact the Sales Department)				

OUTRIGGER PACKAGES FOR VENTURO HT CRANE BODIES – All of the above Outrigger Packages are available for Venturo HT Crane Bodies. Installation of outrigger cross tube is included at no additional charge. 24962 Front outriggers may be required for additional stability.
SEE BELOW

OTHER MANUAL OUTRIGGERS (For use as auxiliary outriggers in addition to one of the packages listed above.)			
DESCRIPTION	PART #	INSTALL WEIGHT	SELLING PRICE
Single Front Outrigger - For CS or SS installation in pre-installed mounting tube on Venturo HT crane body. 12" pullout. Vertical travel of 30" pin adjustment plus 5" screw foot adjustment.	24971-LCT	45#	$384.00
Front Outrigger Package - For installation on non-Venturo crane body. Manual pullouts, manual down. Full width mounting tube 3" x 4" x 80", two pullouts (12" CS-12"SS) total spread of 116", retracted 92", vertical travel of 30" pin adjustment plus 5" screw foot adjustment.	24971-FP	180#	$928.00
Fold Away Type - For Platform Body. Vertically extends from 28-1/2" to 44" plus 5" screw foot adjustment.	23960-2	43#	$340.00
Pullout Type - 8" extension with 32" mounting tube. Vertically extends from 4 1/2" to 30" plus 5" screw foot adjustment.	23962-2	53#	$408.00

MOUNTING PEDESTALS			
DESCRIPTION	PART #	WEIGHT	SELLING PRICE
Mounting Pedestal – 36” High (HT40/50KX) – For platform body	17830-36	376#	$892.00

BOOM REST			
DESCRIPTION	PART #	WEIGHT	SELLING PRICE
BOOM REST – Adjustable 18” – 26” – For utility body	20381-1	48#	$276.00

F.O.B: CINCINNATI, OHIO

EFFECTIVE DATE: JUNE 22, 2015 **REV: AUGUST 5, 2015** **SUBJECT TO CHANGE WITHOUT NOTICE**

VENCO VENTURO INDUSTRIES LLC

VENTURO RUGGED. RELIABLE. REAL.

HYDRAULIC SERVICE CRANES

HT40KX

SUGGESTED SELLING PRICE LIST

SPECIFICATIONS			
MODEL	MAX CAPACITY (LB)	FT / LB RATING	WIRE ROPE
HT40KX	6,000	40,000	100 FT. OF 3/8”

STANDARD EQUIPMENT	
MOMENT OVERLOAD SHUTOFF SYSTEM	25 FT PLUG-IN COMPARTMENT REMOTE CONTROL PENDANT
ANTI-TWO BLOCKING	SWIVEL LOAD BLOCK WITH SAFETY HOOK
WIRE ROPE WITH SAFETY HOOK (SEE ABOVE)	POWER ROTATION – 400 DEGREES

PRICES							
			BOOM EXTENSION				
MODEL	CONTROLS	BOOM LENGTH	POWER	MANUAL	INSTALL WEIGHT	SHIPPING WEIGHT	SELLING PRICE
HT40KX	NON-PROP	10’ – 20’	6’	4’	1900#	2100#	$16,912.00
HT40KX-P	PROPORTIONAL	10’ – 20’	10’	0’	1900#	2100#	$19,000.00
HT40KX-25	PROPORTIONAL	12’ – 24’ 10”	13’	0’	2125#	2325#	$19,532.00

OPTIONS		
RADIO REMOTE CONTROLS WITH ONBOARD DIAGNOSTIC SYSTEM		
PROPORTIONAL CONTROLS – Wireless pistol grip transmitter and compartment mounted receiver with troubleshooting error code display. Includes battery recharger.	**In Lieu of Standard Corded Remote**	$1,024.00
	In addition to Standard Corded Remote	$2,020.00
NON-PROPORTIONAL - Wireless pistol grip transmitter and compartment mounted receiver with troubleshooting error code display.	**In Lieu of Standard Corded Remote**	$928.00
	In addition to Standard Corded Remote	$1,324.00
ENGINE START/STOP & THROTTLE CONTROL		
Includes pendant switches, wiring harness and relays to supply a 12 volt or ground signal to the engine compartment. Does not include an auxiliary electric or vacuum speed controller. (Available only with Proportional Controls)		$244.00
CUSTOM PAINT	**PART #**	
Paint code/sample required	24838	$368.00

PUMPS (hoses/fittings not included)

MODEL	PART#	GPM	PUMP TYPE	SELLING PRICE
HT40KX	19296-2.64	2.6 @ 1000 RPM	A FLANGE, 5/8” – 9 SPLINE	$296.00
HT40KX-P	19296-10.0	12 @ 1200 RPM	B FLANGE, 7/8” – 13 SPLINE	$560.00

RESERVOIRS (hoses/fittings not included)

DESCRIPTION	PART #	WEIGHT	SELLING PRICE
10 GAL. BULKHEAD MOUNT	19294	49	$508.00
25 GAL. BULKHEAD MOUNT	22785	87	$1,043.00

NOTE: RESERVOIRS INCLUDE 100 MESH SUCTION SCREEN, 10 MICRON RETURN FILTER, RETURN AND SUPPLY PRESSURE GAUGES, SIGHT GLASS AND BREATHER CAP.

F.O.B: CINCINNATI, OHIO

EFFECTIVE DATE: JUNE 22, 2015 **REV: AUGUST 5, 2015** **SUBJECT TO CHANGE WITHOUT NOTICE**

VENCO VENTURO INDUSTRIES LLC

VENTURO RUGGED. RELIABLE. REAL.

HYDRAULIC SERVICE CRANES

HT40KX

SUGGESTED SELLING PRICE LIST

OUTRIGGER PACKAGES				
DESCRIPTION	PART #	INSTALL WEIGHT	SHIPPING WEIGHT	SELLING PRICE
Manual pullout, manual crank down. Full width mounting tube 6" x 8" x 81", single crane side 48" pullout with polyurethane rollers, total spread of 142", retracted 94", vertical travel: 14" pin adjustment plus 12" crank adjustment. Bolt-on, adjustable legs.	25100-CD	450#	515#	$1,932.00
Manual pullout, hydraulic down. Full width mounting tube 6" x 8" x 81", single crane side 48" pullout with polyurethane rollers, total spread of 142", retracted 94", vertical travel: 20" hydraulic stroke. Bolt-on, adjustable legs. Includes 2 way control valve, selector valve and concealed hydraulic hoses.	25100-PH	490#	555#	$3,772.00
Same as above with 30" hydraulic stroke at no additional charge	25100-PH-LL	510#	575#	$3,772.00
Hydraulic out, hydraulic down. Full width mounting tube 6" x 8" x 81", single crane side 48" hydraulic extension, total spread of 142", retracted 94", vertical travel: 20" hydraulic stroke. Bolt-on, adjustable legs. Includes 4 way control valve, selector valve and concealed hydraulic hoses.	25100-PHX-SL	590#	655#	$4,716.00
Same as above with 30" hydraulic stroke at no additional charge	25100-PHX-LL	610#	675#	$4,716.00
DUAL TUBE MODELS AVAILABLE FOR CENTER MOUNT CRANE APPLICATIONS (Contact the Sales Department)				

OUTRIGGER PACKAGES FOR VENTURO HT CRANE BODIES – All of the above Outrigger Packages are available for Venturo HT Crane Bodies. Installation of outrigger cross tube is included at no additional charge. 24971-LCT Front outriggers may be required for additional stability. SEE BELOW

OTHER MANUAL OUTRIGGERS (For use as auxiliary outriggers in addition to one of the packages listed above.)			
DESCRIPTION	PART #	INSTALL WEIGHT	SELLING PRICE
Single Front Outrigger - For CS or SS installation in pre-installed mounting tube on Venturo HT crane body. 12" pullout. Vertical travel of 30" pin adjustment plus 5" screw foot adjustment.	24971-LCT	45#	$384.00
Front Outrigger Package - For installation on non-Venturo crane body. Manual pullouts, manual down. Full width mounting tube 3" x 4" x 80", two pullouts (12" CS-12"SS) total spread of 116", retracted 92", vertical travel of 30" pin adjustment plus 5" screw foot adjustment.	24971-FP	180#	$928.00
Fold Away Type - For Platform Body. Vertically extends from 28-1/2" to 44" plus 5" screw foot adjustment.	23960-2	43#	$340.00
Pullout Type - 8" extension with 32" mounting tube. Vertically extends from 4 1/2" to 30" plus 5" screw foot adjustment.	23962-2	53#	$408.00

MOUNTING PEDESTALS			
DESCRIPTION	PART #	WEIGHT	SELLING PRICE
Mounting Pedestal – 36” High (HT40/50KX) – For platform body	17830-36	376#	$892.00

BOOM REST			
DESCRIPTION	PART #	WEIGHT	SELLING PRICE
BOOM REST – Adjustable 18” – 26” – For utility body	20381-1	48#	$276.00

F.O.B: CINCINNATI, OHIO

EFFECTIVE DATE: JUNE 22, 2015 **REV: AUGUST 5, 2015** **SUBJECT TO CHANGE WITHOUT NOTICE**

VENCO VENTURO INDUSTRIES LLC

VENTURO RUGGED. RELIABLE. REAL.

HYDRAULIC SERVICE CRANES

HT30KX

SUGGESTED SELLING PRICE LIST

SPECIFICATIONS			
MODEL	MAX CAPACITY (LB)	FT / LB RATING	WIRE ROPE
HT30KX	5,000	30,000	80 FT. OF 5/16”

STANDARD EQUIPMENT	
MOMENT OVERLOAD SHUTOFF SYSTEM	25 FT PLUG-IN COMPARTMENT REMOTE CONTROL PENDANT
ANTI-TWO BLOCKING	SWIVEL LOAD BLOCK WITH SAFETY HOOK
WIRE ROPE WITH SAFETY HOOK (SEE ABOVE)	POWER ROTATION – 400 DEGREES

PRICES							
			BOOM EXTENSION				
MODEL	CONTROLS	BOOM LENGTH	POWER	MANUAL	INSTALL WEIGHT	SHIPPING WEIGHT	SELLING PRICE
HT30KX	NON-PROP	10’ – 20’	6’	4’	1535#	1635#	$16,352.00
HT30KX-P	PROPORTIONAL	10’ – 20’	10’	0’	1535#	1635#	$17,484.00

OPTIONS		
RADIO REMOTE CONTROLS WITH ONBOARD DIAGNOSTIC SYSTEM		
PROPORTIONAL CONTROLS – Wireless pistol grip transmitter and compartment mounted receiver with troubleshooting error code display. Includes battery recharger.	**In Lieu of Standard Corded Remote**	$1,024.00
	In addition to Standard Corded Remote	$2,020.00
NON-PROPORTIONAL - Wireless pistol grip transmitter and compartment mounted receiver with troubleshooting error code display.	**In Lieu of Standard Corded Remote**	$928.00
	In addition to Standard Corded Remote	$1,324.00
ENGINE START/STOP & THROTTLE CONTROL		
Includes pendant switches, wiring harness and relays to supply a 12 volt or ground signal to the engine compartment. Does not include an auxiliary electric or vacuum speed controller. (Available only with Proportional Controls)		$244.00
CUSTOM PAINT	**PART #**	
Paint code/sample required	24838	$368.00

PUMPS (hoses/fittings not included)

MODEL	PART#	GPM	PUMP TYPE	SELLING PRICE
HT30KX	19296-1.60	2.0 @ 1250 RPM	A FLANGE, 5/8” – 9 SPLINE	$296.00
HT30KX-P	19296-4.00	4.0 @ 1000 RPM	A FLANGE, 5/8” – 9 SPLINE	$296.00

RESERVOIRS (hoses/fittings not included)

DESCRIPTION	PART #	WEIGHT	SELLING PRICE
10 GAL. BULKHEAD MOUNT	19294	49	$508.00

NOTE: RESERVOIRS INCLUDE 100 MESH SUCTION SCREEN, 10 MICRON RETURN FILTER, RETURN AND SUPPLY PRESSURE GAUGES, SIGHT GLASS AND BREATHER CAP.

F.O.B: CINCINNATI, OHIO

EFFECTIVE DATE: JUNE 22, 2015 **REV: AUGUST 5, 2015** **SUBJECT TO CHANGE WITHOUT NOTICE**

VENCO VENTURO INDUSTRIES LLC

VENTURO RUGGED. RELIABLE. REAL.

HYDRAULIC SERVICE CRANES

HT30KX

SUGGESTED SELLING PRICE LIST

OUTRIGGER PACKAGES				
DESCRIPTION	PART #	INSTALL WEIGHT	SHIPPING WEIGHT	SELLING PRICE
Manual pullouts, manual crank down. Full width mounting tube 6" x 4" x 81", two pullouts (36" curbside 12" streetside) total spread of 142", retracted 94", vertical travel of 13 1/2" pin adjustment plus 12" crank adjustment.	24962-CD	315#	380#	$1,564.00
Manual pullouts, hydraulic down. Full width mounting tube 6" x 4" x 81", two pullouts (36" curbside 12" streetside) total spread of 143", retracted 95", vertical travel of 20", includes 2 way control valve, selector valve and concealed hydraulic hoses.	24962-PH	410#	475#	$3,680.00
OUTRIGGER PACKAGES FOR VENTURO HT CRANE BODIES – All of the above Outrigger Packages are available for Venturo HT Crane Bodies. Installation of outrigger cross tube is included at no additional charge. 24971-LCT Front outriggers may be required for additional stability. SEE BELOW				

OTHER MANUAL OUTRIGGERS (For use as auxiliary outriggers in addition to one of the packages listed above.)			
DESCRIPTION	PART #	INSTALL WEIGHT	SELLING PRICE
Single Front Outrigger - For CS or SS installation in pre-installed mounting tube on Venturo HT crane body. 12" pullout. Vertical travel of 30" pin adjustment plus 5" screw foot adjustment.	24971-LCT	45#	$384.00
Front Outrigger Package - For installation on non-Venturo crane body. Manual pullouts, manual down. Full width mounting tube 3" x 4" x 80", two pullouts (12" CS-12"SS) total spread of 116", retracted 92", vertical travel of 30" pin adjustment plus 5" screw foot adjustment.	24971-FP	180#	$928.00
Fold Away Type - For Platform Body. Vertically extends from 28-1/2" to 44" plus 5" screw foot adjustment.	23960-2	43#	$340.00
Pullout Type - 8" extension with 32" mounting tube. Vertically extends from 4 1/2" to 30" plus 5" screw foot adjustment.	23962-2	53#	$408.00

MOUNTING PEDESTALS			
DESCRIPTION	PART #	WEIGHT	SELLING PRICE
Mounting Pedestal – 36” High (HT40/50KX) – For platform body	17576-36	376#	$892.00

BOOM REST			
DESCRIPTION	PART #	WEIGHT	SELLING PRICE
BOOM REST – Adjustable 18” – 26” – For utility body	20381-1	48#	$276.00

F.O.B: CINCINNATI, OHIO

EFFECTIVE DATE: JUNE 22, 2015 **REV: AUGUST 5, 2015** **SUBJECT TO CHANGE WITHOUT NOTICE**

VENCO VENTURO INDUSTRIES LLC

VENTURO RUGGED. RELIABLE. REAL.

HYDRAULIC SERVICE CRANES

HT25KX

SUGGESTED SELLING PRICE LIST

SPECIFICATIONS			
MODEL	MAX CAPACITY (LB)	FT / LB RATING	WIRE ROPE
HT25KX	5,000	25,000	80 FT. OF 5/16”

STANDARD EQUIPMENT	
MOMENT OVERLOAD SHUTOFF SYSTEM	25 FT PLUG-IN COMPARTMENT REMOTE CONTROL PENDANT
ANTI-TWO BLOCKING	SWIVEL LOAD BLOCK WITH SAFETY HOOK
WIRE ROPE WITH SAFETY HOOK (SEE ABOVE)	POWER ROTATION – 400 DEGREES

PRICES							
			BOOM EXTENSION				
MODEL	CONTROLS	BOOM LENGTH	POWER	MANUAL	INSTALL WEIGHT	SHIPPING WEIGHT	SELLING PRICE
HT25KX	NON-PROP	10’ – 20’	6’	4’	1535#	1635#	$15,776.00
HT25KX-P	PROPORTIONAL	10’ – 20’	10’	0’	1535#	1635#	$16,912.00

OPTIONS		
RADIO REMOTE CONTROLS WITH ONBOARD DIAGNOSTIC SYSTEM		
PROPORTIONAL CONTROLS – Wireless pistol grip transmitter and compartment mounted receiver with troubleshooting error code display. Includes battery recharger.	**In Lieu of Standard Corded Remote**	$1,024.00
	In addition to Standard Corded Remote	$2,020.00
NON-PROPORTIONAL - Wireless pistol grip transmitter and compartment mounted receiver with troubleshooting error code display.	**In Lieu of Standard Corded Remote**	$928.00
	In addition to Standard Corded Remote	$1,324.00
ENGINE START/STOP & THROTTLE CONTROL		
Includes pendant switches, wiring harness and relays to supply a 12 volt or ground signal to the engine compartment. Does not include an auxiliary electric or vacuum speed controller. (Available only with Proportional Controls)		$244.00
CUSTOM PAINT	**PART #**	
Paint code/sample required	24838	$368.00

PUMPS (hoses/fittings not included)

MODEL	PART#	GPM	PUMP TYPE	SELLING PRICE
HT25KX	19296-1.60	2.0 @ 1250 RPM	A FLANGE, 5/8” – 9 SPLINE	$296.00
HT25KX-P	19296-4.00	4.0 @ 1000 RPM	A FLANGE, 5/8” – 9 SPLINE	$296.00

RESERVOIRS (hoses/fittings not included)

DESCRIPTION	PART #	WEIGHT	SELLING PRICE
10 GAL. BULKHEAD MOUNT	19294	49	$508.00

NOTE: RESERVOIRS INCLUDE 100 MESH SUCTION SCREEN, 10 MICRON RETURN FILTER, RETURN AND SUPPLY PRESSURE GAUGES, SIGHT GLASS AND BREATHER CAP.

F.O.B: CINCINNATI, OHIO

EFFECTIVE DATE: JUNE 22, 2015 **REV: AUGUST 5, 2015** **SUBJECT TO CHANGE WITHOUT NOTICE**

VENCO VENTURO INDUSTRIES LLC

VENTURO RUGGED. RELIABLE. REAL.

HYDRAULIC SERVICE CRANES

HT25KX

SUGGESTED SELLING PRICE LIST

OUTRIGGER PACKAGES				
DESCRIPTION	PART #	INSTALL WEIGHT	SHIPPING WEIGHT	SELLING PRICE
Manual pullouts, manual crank down. Full width mounting tube 6" x 4" x 81", two pullouts (36" curbside 12" streetside) total spread of 142", retracted 94", vertical travel of 13 1/2" pin adjustment plus 12" crank adjustment.	24962-CD	315#	380#	$1,564.00
Manual pullouts, hydraulic down. Full width mounting tube 6" x 4" x 81", two pullouts (36" curbside 12" streetside) total spread of 143", retracted 95", vertical travel of 20", includes 2 way control valve, selector valve and concealed hydraulic hoses.	24962-PH	410#	475#	$3,680.00
OUTRIGGER PACKAGES FOR VENTURO HT CRANE BODIES – All of the above Outrigger Packages are available for Venturo HT Crane Bodies. Installation of outrigger cross tube is included at no additional charge. 24971-LCT Front outriggers may be required for additional stability. SEE BELOW				

OTHER MANUAL OUTRIGGERS (For use as auxiliary outriggers in addition to one of the packages listed above.)			
DESCRIPTION	PART #	INSTALL WEIGHT	SELLING PRICE
Single Front Outrigger - For CS or SS installation in pre-installed mounting tube on Venturo HT crane body. 12" pullout. Vertical travel of 30" pin adjustment plus 5" screw foot adjustment.	24971-LCT	45#	$384.00
Front Outrigger Package - For installation on non-Venturo crane body. Manual pullouts, manual down. Full width mounting tube 3" x 4" x 80", two pullouts (12" CS-12"SS) total spread of 116", retracted 92", vertical travel of 30" pin adjustment plus 5" screw foot adjustment.	24971-FP	180#	$928.00
Fold Away Type - For Platform Body. Vertically extends from 28-1/2" to 44" plus 5" screw foot adjustment.	23960-2	43#	$340.00
Pullout Type - 8" extension with 32" mounting tube. Vertically extends from 4 1/2" to 30" plus 5" screw foot adjustment.	23962-2	53#	$408.00

MOUNTING PEDESTALS			
DESCRIPTION	PART #	WEIGHT	SELLING PRICE
Mounting Pedestal – 36” High (HT40/50KX) – For platform body	17576-36	197#	$712.00

BOOM REST			
DESCRIPTION	PART #	WEIGHT	SELLING PRICE
BOOM REST – Adjustable 18” – 26” – For utility body	20381-2	48#	$276.00

F.O.B: CINCINNATI, OHIO

EFFECTIVE DATE: JUNE 22, 2015 **REV: AUGUST 5, 2015** **SUBJECT TO CHANGE WITHOUT NOTICE**

VENCO VENTURO INDUSTRIES LLC

VENTURO RUGGED. RELIABLE. REAL.

ELECTRIC SERVICE CRANES

ET36KX

SUGGESTED SELLING PRICE LIST

SPECIFICATIONS	
6,000 LB. MAXIMUM CAPACITY	POWER ROTATION – 360 DEGREE CONTINUOUS
36,000 FT. LB. RATING	POWER BOOM ELEVATION
12V DC ELECTRIC / HYDRAULIC OPERATION	POWER BOOM EXTENSION
STANDARD EQUIPMENT	
CAPCITY OVERLOAD SHUTOFF SYSTEM	SWIVEL LOAD BLOCK WITH SAFETY HOOK
ANTI-TWO BLOCKING	MASTER DISCONNECT SWITCH AND BRACKET
80 FT OF 5/16 FT WIRE ROPE WITH SAFETY HOOK	25 FT X #2 GA BATTERY CABLE PLUS 4 FT FROM CRANE TO DISCONNECT SWITCH
25 FT PLUG IN REMOTE CONTROL PENDANT	

MINIMUM REQUIREMENTS	
25100 SERIES OUTRIGGERS – OR EQUIVALENT	14,500 LB. GVWR CHASSIS

PRICES

MODEL	BOOM LENGTH	BOOM EXTENSION		INSTALL WEIGHT	SHIPPING WEIGHT	SELLING PRICE
		POWER	MANUAL			
ET36KX	10’ – 20’	10’	0	1535#	1635#	$17,764.00

OPTIONS

RADIO REMOTE CONTROLS WITH ONBOARD DIAGNOSTIC SYSTEM		
Hand-held push-button transmitter and compartment mounted receiver with troubleshooting error code display.	**In Lieu of Standard Corded Remote**	$1,056.00
	In addition to Standard Corded Remote	$1,324.00

DESCRIPTION	PART #	WEIGHT	SELLING PRICE
Mounting Pedestal – 36” High for platform body	17576-36	376#	$892.00
Boom Rest – Adjustable 18” – 26” for utility body	20381-2	48#	$276.00
Circuit Breaker Kit – Requires a minimum 300 AMP breaker	22946-300	-	$80.00
CUSTOM PAINT			
Paint code/sample required	24838	-	$368.00

F.O.B: CINCINNATI, OHIO

EFFECTIVE DATE: JUNE 22, 2015 **REV: AUGUST 5, 2015** **SUBJECT TO CHANGE WITHOUT NOTICE**

VENCO VENTURO INDUSTRIES LLC

VENTURO RUGGED. RELIABLE. REAL.

ELECTRIC SERVICE CRANES

ET36KX

SUGGESTED SELLING PRICE LIST

OUTRIGGER PACKAGES				
DESCRIPTION	PART #	INSTALL WEIGHT	SHIPPING WEIGHT	SELLING PRICE
Manual pullout, manual crank down. Full width mounting tube 6" x 8" x 81", single crane side 48" pullout with polyurethane rollers, total spread of 142", retracted 94", vertical travel: 14" pin adjustment plus 12" crank adjustment. Bolt-on, adjustable legs.	25100-CD	450#	515#	$1,932.00
Manual pullouts, hydraulic down with 2 way control valve, and electric/hydraulic pump and hoses. Full width mounting tube 6" x 8" x 81", single crane side 48" pullout with polyurethane rollers, total spread of 142", retracted 94", vertical travel: 20" hydraulic stroke. Bolt-on, adjustable legs. Includes 2 way control valve and concealed hydraulic hoses.	25100-PHE	530#	595#	$4,504.00
OUTRIGGER PACKAGES FOR VENTURO HT CRANE BODIES – All of the above Outrigger Packages are available for Venturo HT Crane Bodies. Installation of outrigger cross tube is included at no additional charge. 24971-LCT Front outriggers may be required for additional stability. SEE BELOW				

OTHER MANUAL OUTRIGGERS (For use as auxiliary outriggers in addition to one of the packages listed above.)			
DESCRIPTION	PART #	INSTALL WEIGHT	SELLING PRICE
Single Front Outrigger - For CS or SS installation in pre-installed mounting tube on Venturo HT crane body. 12" pullout. Vertical travel of 30" pin adjustment plus 5" screw foot adjustment.	24971-LCT	45#	$384.00
Front Outrigger Package - For installation on non-Venturo crane body. Manual pullouts, manual down. Full width mounting tube 3" x 4" x 80", two pullouts (12" CS-12"SS) total spread of 116", retracted 92", vertical travel of 30" pin adjustment plus 5" screw foot adjustment.	24971-FP	180#	$928.00
Fold Away Type - For Platform Body. Vertically extends from 28-1/2" to 44" plus 5" screw foot adjustment.	23960-2	43#	$340.00
Pullout Type - 8" extension with 32" mounting tube. Vertically extends from 4 1/2" to 30" plus 5" screw foot adjustment.	23962-2	53#	$408.00

F.O.B: CINCINNATI, OHIO

EFFECTIVE DATE: JUNE 22, 2015 **REV: AUGUST 5, 2015** **SUBJECT TO CHANGE WITHOUT NOTICE**

VENCO VENTURO INDUSTRIES LLC

VENTURO RUGGED. RELIABLE. REAL.

ELECTRIC SERVICE CRANES

ET30KX

SUGGESTED SELLING PRICE LIST

SPECIFICATIONS			
MODEL	MAX CAPACITY (LB)	FT / LB RATING	WIRE ROPE
ET30KX	5,000	30,000	80 FT. OF 5/16”
POWER ROTATION – 360 DEGREE CONTINUOUS		POWER BOOM ELEVATION	
12V DC ELECTRIC / HYDRAULIC OPERATION		POWER BOOM EXTENSION	

(ALSO AVAILABLE IN FULLY HYDRAULIC VERSION. SEE HT30KX PRICE SHEET.)

STANDARD EQUIPMENT	
CAPCITY OVERLOAD SHUTOFF SYSTEM	SWIVEL LOAD BLOCK WITH SAFETY HOOK
ANTI-TWO BLOCKING	MASTER DISCONNECT SWITCH AND BRACKET
25 FT PLUG IN REMOTE CONTROL PENDANT	25 FT X #2 GA BATTERY CABLE PLUS 4 FT FROM CRANE TO DISCONNECT SWITCH

MINIMUM REQUIREMENTS	
24962 SERIES OUTRIGGERS – OR EQUIVALENT	11,000 GVWR CHASSIS

PRICES						
		BOOM EXTENSION				
MODEL	BOOM LENGTH	POWER	MANUAL	INSTALL WEIGHT	SHIPPING WEIGHT	SELLING PRICE
ET30KX	10’ – 20’	6’	4’	1500#	1600#	$16,964.00

OPTIONS			
RADIO REMOTE CONTROLS WITH ONBOARD DIAGNOSTIC SYSTEM			
Hand-held push-button transmitter and compartment mounted receiver with troubleshooting error code display.	**In Lieu of Standard Corded Remote**		$1,056.00
	In addition to Standard Corded Remote		$1,324.00
DESCRIPTION	**PART #**	**WEIGHT**	**SELLING PRICE**
Mounting Pedestal – 36” High for platform body	17576-36	376#	$892.00
Boom Rest – Adjustable 18” – 26” for utility body	20381-2	48#	$276.00
Circuit Breaker Kit – Requires a minimum 300 AMP breaker	22946-300	-	$80.00
CUSTOM PAINT			
Paint code/sample required	24838	-	$368.00

F.O.B: CINCINNATI, OHIO

EFFECTIVE DATE: JUNE 22, 2015 **REV: AUGUST 5, 2015** **SUBJECT TO CHANGE WITHOUT NOTICE**

VENCO VENTURO INDUSTRIES LLC

VENTURO RUGGED. RELIABLE. REAL.

ELECTRIC SERVICE CRANES

ET30KX

SUGGESTED SELLING PRICE LIST

OUTRIGGER PACKAGES				
DESCRIPTION	PART #	INSTALL WEIGHT	SHIPPING WEIGHT	SELLING PRICE
Manual pullouts, manual crank down. Full width mounting tube 6" x 4" x 81", two pullouts (36" curbside 12" streetside) total spread of 142", retracted 94", vertical travel of 13 1/2" pin adjustment plus 12" crank adjustment.	24962-CD	315#	380#	$1,564.00
Manual pullouts, hydraulic down with 2 way control valve, and electric/hydraulic pump and hoses. Full width mounting tube 6" x 4" x 81", two pullouts (36" curbside 12" streetside) total spread of 143", retracted 95", vertical travel of 20".	24962-PHE	450#	515#	$4,408.00
OUTRIGGER PACKAGES FOR VENTURO HT CRANE BODIES – All of the above Outrigger Packages are available for Venturo HT Crane Bodies. Installation of outrigger cross tube is included at no additional charge. 24971-LCT Front outriggers may be required for additional stability. SEE BELOW				

OTHER MANUAL OUTRIGGERS (For use as auxiliary outriggers in addition to one of the packages listed above.)			
DESCRIPTION	PART #	INSTALL WEIGHT	SELLING PRICE
Fold Away Type - For Platform Body. Vertically extends from 28-1/2" to 44" plus 5" screw foot adjustment.	23960-2	43#	$340.00
Pullout Type - 8" extension with 32" mounting tube. Vertically extends from 4 1/2" to 30" plus 5" screw foot adjustment.	23962-2	53#	$408.00

F.O.B: CINCINNATI, OHIO

EFFECTIVE DATE: JUNE 22, 2015 **REV: AUGUST 5, 2015** **SUBJECT TO CHANGE WITHOUT NOTICE**

VENCO VENTURO INDUSTRIES LLC

VENTURO RUGGED. RELIABLE. REAL.

ELECTRIC SERVICE CRANES

ET25KX

SUGGESTED SELLING PRICE LIST

SPECIFICATIONS			
MODEL	MAX CAPACITY (LB)	FT / LB RATING	WIRE ROPE
ET25KX	5,000	25,000	80 FT. OF 5/16”
POWER ROTATION – 360 DEGREE CONTINUOUS		POWER BOOM ELEVATION	
12V DC ELECTRIC / HYDRAULIC OPERATION		POWER BOOM EXTENSION	

(ALSO AVAILABLE IN FULLY HYDRAULIC VERSION. SEE HT25KX PRICE SHEET.)

STANDARD EQUIPMENT	
CAPCITY OVERLOAD SHUTOFF SYSTEM	SWIVEL LOAD BLOCK WITH SAFETY HOOK
ANTI-TWO BLOCKING	MASTER DISCONNECT SWITCH AND BRACKET
25 FT PLUG IN REMOTE CONTROL PENDANT	25 FT X #2 GA BATTERY CABLE PLUS 4 FT FROM CRANE TO DISCONNECT SWITCH

MINIMUM REQUIREMENTS	
24962 SERIES OUTRIGGERS – OR EQUIVALENT	10,500 GVWR CHASSIS

PRICES						
		BOOM EXTENSION		INSTALL	SHIPPING	
MODEL	BOOM LENGTH	POWER	MANUAL	WEIGHT	WEIGHT	SELLING PRICE
ET25KX	10’ – 20’	6’	4’	1500#	1600#	$16,392.00

OPTIONS			
RADIO REMOTE CONTROLS WITH ONBOARD DIAGNOSTIC SYSTEM			
Hand-held push-button transmitter and compartment mounted receiver with troubleshooting error code display.	**In Lieu of Standard Corded Remote**		$1,056.00
	In addition to Standard Corded Remote		$1,324.00
DESCRIPTION	**PART #**	**WEIGHT**	**SELLING PRICE**
Mounting Pedestal – 36” High for platform body	17576-36	197#	$712.00
Boom Rest – Adjustable 18” – 26” for utility body	20381-2	48#	$276.00
Circuit Breaker Kit – Requires a minimum 300 AMP breaker	22946-300	-	$80.00
CUSTOM PAINT			
Paint code/sample required	24838	-	$368.00

F.O.B: CINCINNATI, OHIO

EFFECTIVE DATE: JUNE 22, 2015 **REV: AUGUST 5, 2015** **SUBJECT TO CHANGE WITHOUT NOTICE**

VENCO VENTURO INDUSTRIES LLC

VENTURO RUGGED. RELIABLE. REAL.

ELECTRIC SERVICE CRANES

ET25KX

SUGGESTED SELLING PRICE LIST

OUTRIGGER PACKAGES				
DESCRIPTION	PART #	INSTALL WEIGHT	SHIPPING WEIGHT	SELLING PRICE
Manual pullouts, manual crank down. Full width mounting tube 6" x 4" x 81", two pullouts (36" curbside 12" streetside) total spread of 142", retracted 94", vertical travel of 13 1/2" pin adjustment plus 12" crank adjustment.	24962-CD	315#	380#	$1,564.00
Manual pullouts, hydraulic down with 2 way control valve, and electric/hydraulic pump and hoses. Full width mounting tube 6" x 4" x 81", two pullouts (36" curbside 12" streetside) total spread of 143", retracted 95", vertical travel of 20".	24962-PHE	450#	515#	$4,408.00
OUTRIGGER PACKAGES FOR VENTURO HT CRANE BODIES – All of the above Outrigger Packages are available for Venturo HT Crane Bodies. Installation of outrigger cross tube is included at no additional charge. 24971-LCT Front outriggers may be required for additional stability. SEE BELOW				

OTHER MANUAL OUTRIGGERS (For use as auxiliary outriggers in addition to one of the packages listed above.)			
DESCRIPTION	PART #	INSTALL WEIGHT	SELLING PRICE
Fold Away Type - For Platform Body. Vertically extends from 28-1/2" to 44" plus 5" screw foot adjustment.	23960-2	43#	$340.00
Pullout Type - 8" extension with 32" mounting tube. Vertically extends from 4 1/2" to 30" plus 5" screw foot adjustment.	23962-2	53#	$408.00

F.O.B: CINCINNATI, OHIO

EFFECTIVE DATE: JUNE 22, 2015 **REV: AUGUST 5, 2015** **SUBJECT TO CHANGE WITHOUT NOTICE**

VENCO VENTURO INDUSTRIES LLC

VENTURO RUGGED. RELIABLE. REAL.

ELECTRIC SERVICE CRANES

ET18KX

SUGGESTED SELLING PRICE LIST

SPECIFICATIONS			
MODEL	MAX CAPACITY (LB)	FT / LB RATING	WIRE ROPE
ET18KX	4,500	18,000	80 FT. OF 5/16”
POWER ROTATION – 360 DEGREE CONTINUOUS		POWER BOOM ELEVATION	
12V DC ELECTRIC / HYDRAULIC OPERATION		POWER BOOM EXTENSION	

STANDARD EQUIPMENT	
CAPCITY OVERLOAD SHUTOFF SYSTEM	SWIVEL LOAD BLOCK WITH SAFETY HOOK
ANTI-TWO BLOCKING	MASTER DISCONNECT SWITCH AND BRACKET
25 FT PLUG IN REMOTE CONTROL PENDANT	25 FT X #2 GA BATTERY CABLE PLUS 4 FT FROM CRANE TO DISCONNECT SWITCH

MINIMUM REQUIREMENTS	
24962 SERIES OUTRIGGERS – OR EQUIVALENT	10,500 GVWR CHASSIS

PRICES						
		BOOM EXTENSION		INSTALL	SHIPPING	
MODEL	BOOM LENGTH	POWER	MANUAL	WEIGHT	WEIGHT	SELLING PRICE
ET18KX	8’ – 16’	4’	4’	1020#	1150#	$12,996.00

OPTIONS			
RADIO REMOTE CONTROLS WITH ONBOARD DIAGNOSTIC SYSTEM			
Hand-held push-button transmitter and compartment mounted receiver with troubleshooting error code display.	**In Lieu of Standard Corded Remote**		$1,056.00
	In addition to Standard Corded Remote		$1,324.00
DESCRIPTION	**PART #**	**WEIGHT**	**SELLING PRICE**
Mounting Pedestal – 36” High for platform body	21699-36	197#	$712.00
Boom Rest – Adjustable 18” – 26” for utility body	20381-2	48#	$276.00
Circuit Breaker Kit – Requires a minimum 250 AMP breaker	22946-250	-	$52.00
CUSTOM PAINT			
Paint code/sample required	24838	-	$368.00

F.O.B: CINCINNATI, OHIO

EFFECTIVE DATE: JUNE 22, 2015 **REV: AUGUST 5, 2015** **SUBJECT TO CHANGE WITHOUT NOTICE**

VENCO VENTURO INDUSTRIES LLC

VENTURO RUGGED. RELIABLE. REAL.

ELECTRIC SERVICE CRANES

ET18KX

SUGGESTED SELLING PRICE LIST

OUTRIGGER PACKAGES				
DESCRIPTION	PART #	INSTALL WEIGHT	SHIPPING WEIGHT	SELLING PRICE
Manual pullouts, manual crank down. Full width mounting tube 6" x 4" x 81", two pullouts (36" curbside 12" streetside) total spread of 142", retracted 94", vertical travel of 13 1/2" pin adjustment plus 12" crank adjustment.	24962-CD	315#	380#	$1,564.00
Manual pullouts, hydraulic down with 2 way control valve, and electric/hydraulic pump and hoses. Full width mounting tube 6" x 4" x 81", two pullouts (36" curbside 12" streetside) total spread of 143", retracted 95", vertical travel of 20".	24962-PHE	450#	515#	$4,408.00
OUTRIGGER PACKAGES FOR VENTURO HT CRANE BODIES – All of the above Outrigger Packages are available for Venturo HT Crane Bodies. Installation of outrigger cross tube is included at no additional charge. 24971-LCT Front outriggers may be required for additional stability. SEE BELOW				

OTHER MANUAL OUTRIGGERS (For use as auxiliary outriggers in addition to one of the packages listed above.)			
DESCRIPTION	PART #	INSTALL WEIGHT	SELLING PRICE
Fold Away Type - For Platform Body. Vertically extends from 28-1/2" to 44" plus 5" screw foot adjustment.	23960-2	43#	$340.00
Pullout Type - 8" extension with 32" mounting tube. Vertically extends from 4 1/2" to 30" plus 5" screw foot adjustment.	23962-2	53#	$408.00

F.O.B: CINCINNATI, OHIO

EFFECTIVE DATE: JUNE 22, 2015 **REV: AUGUST 5, 2015** **SUBJECT TO CHANGE WITHOUT NOTICE**

VENCO VENTURO INDUSTRIES LLC

VENTURO RUGGED. RELIABLE. REAL.

ELECTRIC SERVICE CRANES

ET16KX

SUGGESTED SELLING PRICE LIST

SPECIFICATIONS			
MODEL	MAX CAPACITY (LB)	FT / LB RATING	WIRE ROPE
ET16KX	4,000	16,000	80 FT. OF 5/16”
POWER ROTATION – 360 DEGREE CONTINUOUS		POWER BOOM ELEVATION	
12V DC ELECTRIC / HYDRAULIC OPERATION		POWER BOOM EXTENSION	

STANDARD EQUIPMENT	
CAPCITY OVERLOAD SHUTOFF SYSTEM	SWIVEL LOAD BLOCK WITH SAFETY HOOK
ANTI-TWO BLOCKING	MASTER DISCONNECT SWITCH AND BRACKET
25 FT PLUG IN REMOTE CONTROL PENDANT	25 FT X #2 GA BATTERY CABLE PLUS 4 FT FROM CRANE TO DISCONNECT SWITCH

MINIMUM REQUIREMENTS	
24962 SERIES OUTRIGGERS – OR EQUIVALENT	10,500 GVWR CHASSIS

PRICES						
		BOOM EXTENSION		INSTALL	SHIPPING	
MODEL	BOOM LENGTH	POWER	MANUAL	WEIGHT	WEIGHT	SELLING PRICE
ET16KX	8’ – 16’	4’	4’	1020#	1150#	$12,540.00

OPTIONS			
RADIO REMOTE CONTROLS WITH ONBOARD DIAGNOSTIC SYSTEM			
Hand-held push-button transmitter and compartment mounted receiver with troubleshooting error code display.	**In Lieu of Standard Corded Remote**		$1,056.00
	In addition to Standard Corded Remote		$1,324.00
DESCRIPTION	**PART #**	**WEIGHT**	**SELLING PRICE**
Mounting Pedestal – 36” High for platform body	21699-36	197#	$712.00
Boom Rest – Adjustable 18” – 26” for utility body	20381-2	48#	$276.00
Circuit Breaker Kit – Requires a minimum 250 AMP breaker	22946-250	-	$52.00
CUSTOM PAINT			
Paint code/sample required	24838	-	$368.00

F.O.B: CINCINNATI, OHIO

EFFECTIVE DATE: JUNE 22, 2015 **REV: AUGUST 5, 2015** **SUBJECT TO CHANGE WITHOUT NOTICE**

VENCO VENTURO INDUSTRIES LLC

VENTURO RUGGED. RELIABLE. REAL.

ELECTRIC SERVICE CRANES

ET16KX

SUGGESTED SELLING PRICE LIST

OUTRIGGER PACKAGES

DESCRIPTION	PART #	INSTALL WEIGHT	SHIPPING WEIGHT	SELLING PRICE
Manual pullouts, manual crank down. Full width mounting tube 6" x 4" x 81", two pullouts (36" curbside 12" streetside) total spread of 142", retracted 94", vertical travel of 13 1/2" pin adjustment plus 12" crank adjustment.	24962-CD	315#	380#	$1,564.00
Manual pullouts, hydraulic down with 2 way control valve, and electric/hydraulic pump and hoses. Full width mounting tube 6" x 4" x 81", two pullouts (36" curbside 12" streetside) total spread of 143", retracted 95", vertical travel of 20".	24962-PHE	450#	515#	$4,408.00

OUTRIGGER PACKAGES FOR VENTURO HT CRANE BODIES – All of the above Outrigger Packages are available for Venturo HT Crane Bodies. Installation of outrigger cross tube is included at no additional charge. 24971-LCT Front outriggers may be required for additional stability. SEE BELOW

OTHER MANUAL OUTRIGGERS
(For use as auxiliary outriggers in addition to one of the packages listed above.)

DESCRIPTION	PART #	INSTALL WEIGHT	SELLING PRICE
Fold Away Type - For Platform Body. Vertically extends from 28-1/2" to 44" plus 5" screw foot adjustment.	23960-2	43#	$340.00
Pullout Type - 8" extension with 32" mounting tube. Vertically extends from 4 1/2" to 30" plus 5" screw foot adjustment.	23962-2	53#	$408.00

F.O.B: CINCINNATI, OHIO

EFFECTIVE DATE: JUNE 22, 2015 **REV: AUGUST 5, 2015** **SUBJECT TO CHANGE WITHOUT NOTICE**

VENCO VENTURO INDUSTRIES LLC

VENTURO RUGGED. RELIABLE. REAL.

ELECTRIC SERVICE CRANES

ET12K ET12KX

SUGGESTED SELLING PRICE LIST

SPECIFICATIONS			
MODEL	MAX CAPACITY (LB)	FT / LB RATING	WIRE ROPE
ET12K(X)	3,500	12,000	65 FT OF ¼”
POWER ROTATION – 360 DEGREE CONTINUOUS		POWER BOOM ELEVATION	
12V DC ELECTRIC / HYDRAULIC OPERATION		TELESCOPIC BOOM – MANUAL (K) OR POWER EXTENSION (KX)	

STANDARD EQUIPMENT	
CAPCITY OVERLOAD SHUTOFF SYSTEM	SWIVEL LOAD BLOCK WITH SAFETY HOOK
ANTI-TWO BLOCKING	MASTER DISCONNECT SWITCH AND BRACKET
25 FT PLUG IN REMOTE CONTROL PENDANT	25 FT X #2 GA BATTERY CABLE PLUS 4 FT FROM CRANE TO DISCONNECT SWITCH

PRICES						
		BOOM EXTENSION		INSTALL	SHIPPING	
MODEL	BOOM LENGTH	POWER	MANUAL	WEIGHT	WEIGHT	SELLING PRICE
ET12K	7’ – 15’	--	4’ + 4’	610#	680#	$9,632.00
ET12KX	7’ – 15’	4’	4’	700#	820#	$10,604.00

OPTIONS			
RADIO REMOTE CONTROLS WITH ONBOARD DIAGNOSTIC SYSTEM			
Hand-held push-button transmitter and compartment mounted receiver with troubleshooting error code display.	**In Lieu of Standard Corded Remote**		$1,056.00
	In addition to Standard Corded Remote		$1,324.00
DESCRIPTION	**PART #**	**WEIGHT**	**SELLING PRICE**
CAPACITY OVERLOAD ALARM (Capacity Overload Shut-Off System Standard)	17356		$156.00
Mounting Pedestal – 21” High for platform body	21571-21	95#	$456.00
Mounting Pedestal – 36” High for platform body	21571-36	130#	$516.00
BOOM REST Adjustable (13” – 19”) with hook restraint	21440	30#	$252.00
Circuit Breaker Kit – Requires a minimum 250 AMP breaker	22946-250	-	$52.00
CUSTOM PAINT			
Paint code/sample required	24838	-	$368.00

OUTRIGGERS			
DESCRIPTION	**PART #**	**WEIGHT**	**SELLING PRICE**
CRANKDOWN OUTRIGGER PACKAGE - Manual Pullout/Manual Crankdown. Full width mounting tube 3 1/2" x 3 1/2" x 88". Curbside pullout (28 1/2" extension), streetside permanent mount. Total spread of 126". Vertical travel of 13 1/2" pin adjustment plus 15 1/2 crank adjustment.	18500-CD	225#	$964.00
SIDE BRACKET TYPE - Single jackleg for utility body - Extends 0-24"	13500	24#	$168.00
FOLD AWAY TYPE - Single jackleg for platform body - Extends 27"-45"	11822-2	31#	$216.00

F.O.B: CINCINNATI, OHIO

EFFECTIVE DATE: JUNE 22, 2015 **REV: AUGUST 5, 2015** **SUBJECT TO CHANGE WITHOUT NOTICE**

VENCO VENTURO INDUSTRIES LLC

VENTURO RUGGED. RELIABLE. REAL.

ELECTRIC SERVICE CRANES

ET8K ET8KX

SUGGESTED SELLING PRICE LIST

SPECIFICATIONS			
MODEL	MAX CAPACITY (LB)	FT / LB RATING	WIRE ROPE
ET8K(X)	3,200	8,000	65 FT OF 7/32”
POWER ROTATION – 360 DEGREE CONTINUOUS		POWER BOOM ELEVATION	
12V DC ELECTRIC / HYDRAULIC OPERATION		TELESCOPIC BOOM – MANUAL (K) OR POWER EXTENSION (KX)	

STANDARD EQUIPMENT	
CAPCITY OVERLOAD SHUTOFF SYSTEM	SWIVEL LOAD BLOCK WITH SAFETY HOOK
ANTI-TWO BLOCKING	MASTER DISCONNECT SWITCH AND BRACKET
25 FT PLUG IN REMOTE CONTROL PENDANT	25 FT X #2 GA BATTERY CABLE PLUS 4 FT FROM CRANE TO DISCONNECT SWITCH

PRICES						
		BOOM EXTENSION		INSTALL	SHIPPING	
MODEL	BOOM LENGTH	POWER	MANUAL	WEIGHT	WEIGHT	SELLING PRICE
ET8K	6’ – 14’	--	4’ + 4’	560#	630#	$8,856.00
ET8KX	6’ – 14’	4’	4’	650#	720#	$9,748.00

OPTIONS			
RADIO REMOTE CONTROLS WITH ONBOARD DIAGNOSTIC SYSTEM			
Hand-held push-button transmitter and compartment mounted receiver with troubleshooting error code display.	**In Lieu of Standard Corded Remote**		$1,056.00
	In addition to Standard Corded Remote		$1,324.00
DESCRIPTION	**PART #**	**WEIGHT**	**SELLING PRICE**
CAPACITY OVERLOAD ALARM (Capacity Overload Shut-Off System Standard)	17356		$156.00
Mounting Pedestal – 21” High for platform body	21571-21	95#	$456.00
Mounting Pedestal – 36” High for platform body	21571-36	130#	$516.00
BOOM REST Adjustable (13” – 19”) with hook restraint	21440	30#	$252.00
Circuit Breaker Kit – Requires a minimum 250 AMP breaker	22946-250	-	$52.00
CUSTOM PAINT			
Paint code/sample required	24838	-	$368.00

OUTRIGGERS			
DESCRIPTION	**PART #**	**WEIGHT**	**SELLING PRICE**
CRANKDOWN OUTRIGGER PACKAGE - Manual Pullout/Manual Crankdown. Full width mounting tube 3 1/2" x 3 1/2" x 88". Curbside pullout (28 1/2" extension), streetside permanent mount. Total spread of 126". Vertical travel of 13 1/2" pin adjustment plus 15 1/2 crank adjustment.	18500-CD	225#	$964.00
SIDE BRACKET TYPE - Single jackleg for utility body - Extends 0-24"	13500	24#	$168.00
FOLD AWAY TYPE - Single jackleg for platform body - Extends 27"-45"	11822-2	31#	$216.00

F.O.B: CINCINNATI, OHIO

EFFECTIVE DATE: JUNE 22, 2015 **REV: AUGUST 5, 2015** **SUBJECT TO CHANGE WITHOUT NOTICE**

VENCO VENTURO INDUSTRIES LLC

VENTURO RUGGED. RELIABLE. REAL.

ELECTRIC SERVICE CRANES

ET6K

SUGGESTED SELLING PRICE LIST

SPECIFICATIONS			
MODEL	MAX CAPACITY (LB)	FT / LB RATING	WIRE ROPE
ET6K	2,000	6,000	50 FT OF 3/16”
CONTINUOUS POWER ROTATION		POWER BOOM ELEVATION	
12V DC ELECTRIC / HYDRAULIC OPERATION		TELESCOPIC BOOM – MANUAL	

STANDARD EQUIPMENT	
CAPCITY OVERLOAD SHUTOFF SYSTEM	SWIVEL LOAD BLOCK WITH SAFETY HOOK
MASTER DISCONNECT SWITCH AND BRACKET	25 FT X #4 GA BATTERY CABLE
20 FT PLUG IN REMOTE CONTROL PENDANT	

PRICES						
		BOOM EXTENSION				
MODEL	BOOM LENGTH	POWER	MANUAL	INSTALL WEIGHT	SHIPPING WEIGHT	SELLING PRICE
ET6K	6’ – 10’	--	4’	380#	450#	$6,984.00

OPTIONS		
RADIO REMOTE CONTROLS WITH ONBOARD DIAGNOSTIC SYSTEM		
Hand-held push-button transmitter and compartment mounted receiver with troubleshooting error code display.	**In Lieu of Standard Corded Remote**	$1,056.00
	In addition to Standard Corded Remote	$1,324.00

DESCRIPTION	PART #	WEIGHT	SELLING PRICE
ANTI-TWO BLOCKING KIT (Factory-Installed)	25995	30#	$324.00
CAPACITY OVERLOAD ALARM (Capacity Overload Shut-Off System Standard)	17356	-	$156.00
Mounting Pedestal – 21” High for platform body	20480-21	95#	$280.00
Mounting Pedestal – 36” High for platform body	20480-36	130#	$348.00
BOOM REST Adjustable (13” – 19”) with hook restraint	21440	30#	$252.00
Circuit Breaker Kit – Requires a minimum 250 AMP breaker	22946-250	-	$52.00
CUSTOM PAINT			
Paint code/sample required	24838	-	$368.00

OUTRIGGERS			
DESCRIPTION	PART #	WEIGHT	SELLING PRICE
CRANKDOWN OUTRIGGER PACKAGE - Manual Pullout/Manual Crankdown. Full width mounting tube 3 1/2" x 3 1/2" x 88". Curbside pullout (28 1/2" extension), streetside permanent mount. Total spread of 126". Vertical travel of 13 1/2" pin adjustment plus 15 1/2 crank adjustment.	18500-CD	225#	$964.00
SIDE BRACKET TYPE - Single jackleg for utility body - Extends 0-24"	13500	24#	$168.00
FOLD AWAY TYPE - Single jackleg for platform body - Extends 27"-45"	11822-2	31#	$216.00

F.O.B: CINCINNATI, OHIO

EFFECTIVE DATE: JUNE 22, 2015 **REV: AUGUST 5, 2015** **SUBJECT TO CHANGE WITHOUT NOTICE**

VENCO VENTURO INDUSTRIES LLC

VENTURO RUGGED. RELIABLE. REAL.

ELECTRIC SERVICE CRANES

DT7K

SUGGESTED SELLING PRICE LIST

SPECIFICATIONS			
MODEL	MAX CAPACITY (LB)	FT / LB RATING	WIRE ROPE
DT7K	2,200	7,000	50 FT OF 3/16”
MANUAL ROTATION WITH 8 POSITIVE PIN LOCK		MANUAL 3 POSITION BOOM ELEVATION WITH SPRING COUNTER BALANCE	
12V DC ELECTRIC / HYDRAULIC OPERATION		MANUAL TELESCOPIC BOOM	

STANDARD EQUIPMENT	
15 FT PLUG IN REMOTE CONTROL PENDANT	SWIVEL LOAD BLOCK WITH SAFETY HOOK
25 FT X #2 GA BATTERY CABLE PLUS 4 FT FROM CRANE TO DISCONNECT SWITCH	MASTER DISCONNECT SWITCH AND BRACKET

PRICES						
		BOOM EXTENSION		INSTALL	SHIPPING	
MODEL	BOOM LENGTH	POWER	MANUAL	WEIGHT	WEIGHT	SELLING PRICE
DT7K	6’ – 10’	--	4’	310#	380#	$4,440.00

OPTIONS			
DESCRIPTION	PART #	WEIGHT	SELLING PRICE
Mounting Pedestal – 21” High for platform body	14930-21	65#	$420.00
Mounting Pedestal – 36” High for platform body	14930-36	95#	$468.00
Circuit Breaker Kit – Requires a minimum 250 AMP breaker	22946-250	-	$52.00
CUSTOM PAINT			
Paint code/sample required	24838	-	$368.00

OUTRIGGERS			
DESCRIPTION	PART #	WEIGHT	SELLING PRICE
CRANKDOWN OUTRIGGER PACKAGE - Manual Pullout/Manual Crankdown. Full width mounting tube 3 1/2" x 3 1/2" x 88". Curbside pullout (28 1/2" extension), streetside permanent mount. Total spread of 126". Vertical travel of 13 1/2" pin adjustment plus 15 1/2 crank adjustment.	18500-CD	225#	$964.00
SIDE BRACKET TYPE - Single jackleg for utility body - Extends 0-24"	13500	24#	$168.00
FOLD AWAY TYPE - Single jackleg for platform body - Extends 27"-45"	11822-2	31#	$216.00

F.O.B: CINCINNATI, OHIO

EFFECTIVE DATE: JUNE 22, 2015 **REV: AUGUST 5, 2015** **SUBJECT TO CHANGE WITHOUT NOTICE**

VENCO VENTURO INDUSTRIES LLC

VENTURO RUGGED. RELIABLE. REAL.

ELECTRIC MAST SERVICE CRANES

CT310KX

SUGGESTED SELLING PRICE LIST

SPECIFICATIONS			
MODEL	MAX CAPACITY (LB)	FT / LB RATING	WIRE ROPE
CT310KX	1,900	6,650	50 FT OF 3/16”
POWER ROTATION – 322 DEGREES		POWER BOOM ELEVATION	
12V DC ELECTRIC / HYDRAULIC OPERATION		POWER BOOM EXTENSION	

STANDARD EQUIPMENT	
CAPACITY OVERLOAD SENSOR WITH AUDIBLE ALARM	SWIVEL LOAD BLOCK WITH SAFETY HOOK
25 FT X #2 GA BATTERY CABLE PLUS 4 FT FROM CRANE TO DISCONNECT SWITCH	MASTER DISCONNECT SWITCH AND BRACKET
20 FT. PLUG IN REMOTE CONTROL PENDANT	

PRICES						
		BOOM EXTENSION		INSTALL	SHIPPING	
MODEL	BOOM LENGTH	POWER	MANUAL	WEIGHT	WEIGHT	SELLING PRICE
CT310KX	3’ – 9.3’	3’ 3”	3’	490#	535#	$9,288.00

OPTIONS		
RADIO REMOTE CONTROLS WITH ONBOARD DIAGNOSTIC SYSTEM		
Hand-held push-button transmitter and compartment mounted receiver with troubleshooting error code display.	**In Lieu of Standard Corded Remote**	$1,056.00
	In addition to Standard Corded Remote	$1,324.00
CIRCUIT BREAKERS	**PART #**	
Circuit Breaker Kit – Requires a minimum 250 AMP breaker	22946-250	$52.00
CUSTOM PAINT	**PART #**	
Paint code/sample required	24838	$368.00

OUTRIGGERS			
DESCRIPTION	**PART #**	**WEIGHT**	**SELLING PRICE**
CRANKDOWN OUTRIGGER PACKAGE - Manual Pullout/Manual Crankdown. Full width mounting tube 3 1/2" x 3 1/2" x 88". Curbside pullout (28 1/2" extension), streetside permanent mount. Total spread of 126". Vertical travel of 13 1/2" pin adjustment plus 15 1/2 crank adjustment.	18500-CD	225#	$964.00
SIDE BRACKET TYPE - Single jackleg for utility body - Extends 0-24"	13500	24#	$168.00
FOLD AWAY TYPE - Single jackleg for platform body - Extends 27"-45"	11822-2	31#	$216.00

F.O.B: CINCINNATI, OHIO

EFFECTIVE DATE: JUNE 22, 2015 **REV: AUGUST 5, 2015** **SUBJECT TO CHANGE WITHOUT NOTICE**

VENCO VENTURO INDUSTRIES LLC

VENTURO RUGGED. RELIABLE. REAL.

HEAVY DUTY MAST SERVICE CRANE SERIES

CT2003FB CT2004FB CT2005

SUGGESTED SELLING PRICE LIST

SPECIFICATIONS	
2,000 LB. MAXIMUM CAPACITY	MANUAL ROTATION WITH 8 POSITION POSITIVE PIN LOCK
6,000 FT. / LB. RATING	MANUAL TELESCOPIC FOLDING BOOM (CT2005 WILL NOT FOLD)
12V DC WINCH, HEAVY DUTY, HIGH TORQUE, HIGHSPEED	

STANDARD EQUIPMENT	
35 FT. OF 3/16" WIRE ROPE WITH SAFETY HOOK	SWIVEL LOAD BLOCK WITH SAFETY HOOK
15 FT. PLUG IN REMOTE CONTROL PENDANT	25 FT. X #4 GA BATTERY CABLE
MOUNTING SOCKET – TYPE C – SURFACE MOUNT	MASTER DISCONNECT SWITCH KIT

PRICES

MODEL	BOOM LENGTH	CAPACITY	INSTALL WEIGHT	SHIPPING WEIGHT	SELLING PRICE
CT2003FB	3 – 5 FT	2,000# - 1,000#	235#	290#	$2,652.00
CT2004FB	4 – 7 FT	1,500# - 700#	265#	320#	$2,756.00
CT2005	5 – 9 FT	1,200# - 500#	280#	335#	$2,856.00

MOUNTING SOCKETS:

Type C, suface mount socket is standard. Type A, recessed mount is available at no extra charge.

Note: If necessed mounting socket is used with CT2004FB, boom will not fold.

OPTIONS AND ACCESSORIES

DESCRIPTION	PART #	SELLING PRICE
EXTRA SOCKETS – TYPE "A" – Flush Mount	13171	$204.00
EXTRA SOCKETS – TYPE "C" – Surface Mount	13172	$204.00
SHORT MAST (Specify Height) CT SERIES ONLY	SPECIFY	$204.00
AC DRIVE – CT SERIES ONLY	SPECIFY	$1,108.00
QUICK DISCONNECT SOCKET & PLUG	11645	$72.00
MASTER DISCONNECT SWITCH KIT	13451-K	$48.00
CIRCUIT BREAKER KIT - Requires a minimum 250 AMP breaker	22946-250	$52.00
DISPLAY STAND	21040	CONTACT SALES DEPT
CUSTOM PAINT	**PART #**	
Paint code/sample required	24838	$368.00

OUTRIGGERS

DESCRIPTION	PART #	WEIGHT	SELLING PRICE
SIDE BRACKET TYPE - Single jackleg for utility body - Extends 0-24"	13500	24#	$168.00
FOLD AWAY TYPE - Single jackleg for platform body - Extends 27"-45"	11822-2	31#	$216.00

F.O.B: CINCINNATI, OHIO

EFFECTIVE DATE: JUNE 22, 2015 **REV: AUGUST 5, 2015** **SUBJECT TO CHANGE WITHOUT NOTICE**

VENCO VENTURO INDUSTRIES LLC

VENTURO RUGGED. RELIABLE. REAL.

HEAVY/MEDIUM DUTY MAST SERVICE CRANES

CE6K

SUGGESTED SELLING PRICE LIST

SPECIFICATIONS	
2,000 LB. MAXIMUM CAPACITY	MANUAL ROTATION WITH BAND BRAKE
6,000 FT. / LB. RATING	MANUAL 3 POSITION BOOM ELEVATION
12V DC WINCH, HEAVY DUTY, HIGH TORQUE, HIGHSPEED	MANUAL TELESCOPIC FOLDING BOOM

STANDARD EQUIPMENT	
35 FT. OF 3/16" WIRE ROPE WITH SAFETY HOOK – Standard Winch	SWIVEL LOAD BLOCK WITH SAFETY HOOK
65 FT OF 3/16" WIRE ROPE WITH SAFETY HOOK – Heavy Duty Winch	25 FT. X #4 GA BATTERY CABLE
12 FT PLUG IN REMOTE CONTROL PENDANT	MASTER DISCONNECT SWITCH KIT

PRICES

MODEL	PART #	BOOM LENGTH	WINCH	MAST	INSTALL WEIGHT	SHIPPING WEIGHT	SELLING PRICE
CE6K-3	19600-3-DC	3' – 5'	Standard 12V	TALL	325#	355#	$2,475.00
CE6K-3	19600-3-DC-S	3' – 5'	Standard 12V	SHORT	220#	290#	$2,456.00
CE6K-3/HD	19600-3-DCHD	3' – 5'	Heavy Duty 12V	TALL	265#	335#	$3,124.00
CE6K-3/HD	19600-3-DCHD-S	3' – 5'	Heavy Duty 12V	SHORT	230#	300#	$3,100.00
CE6K-3/AC	19600-3-AC	3' – 5'	120V AC	TALL	255#	325#	$2,724.00
CE6K-4	19600-4-DC	4' – 7'	Standard 12V	TALL	275#	345#	$2,588.00
CE6K-4	19600-4-DC-S	4' – 7'	Standard 12V	SHORT	235#	305#	$2,560.00
CE6K-4/HD	19600-4-DCHD	4' – 7'	Heavy Duty 12V	TALL	280#	350#	$3,224.00
CE6K-4/HD	19600-4-DCHD-S	4' – 7'	Heavy Duty 12V	SHORT	240#	310#	$3,204.00
CE6K-4/AC	19600-4-AC	4' – 7'	120V AC	TALL	280#	350#	$2,824.00

OPTIONS AND ACCESSORIES

DESCRIPTION	PART #	WEIGHT	SELLING PRICE
CIRCUIT BREAKER (SD) - Requires a minimum 150 AMP breaker	22946-150	-	$44.00
CIRCUIT BREAKER (HD) - Requires a minimum 250 AMP breaker	22946-250	-	$52.00
DISPLAY STAND	21040	35#	CONTACT SALES DEPT
CUSTOM PAINT			
Paint code/sample required	24838	-	$368.00

OUTRIGGERS

DESCRIPTION	PART #	WEIGHT	SELLING PRICE
SIDE BRACKET TYPE - Single jackleg for utility body - Extends 0-24"	13500	24#	$168.00
FOLD AWAY TYPE - Single jackleg for platform body - Extends 27"-45"	11822-2	31#	$216.00

F.O.B: CINCINNATI, OHIO

EFFECTIVE DATE: JUNE 22, 2015 **REV: AUGUST 5, 2015** **SUBJECT TO CHANGE WITHOUT NOTICE**

VENCO VENTURO INDUSTRIES LLC

VENTURO RUGGED. RELIABLE. REAL.

LIGHT DUTY MAST SERVICE CRANES

CE1500FB

SUGGESTED SELLING PRICE LIST

SPECIFICATIONS	
1,500 LB. MAXIMUM CAPACITY	MANUAL 360 DEGREE ROTATION WITH BAND BRAKE
4,500 FT. / LB. RATING	MANUAL 3' – 5' TELESCOPIC FOLDING BOOM
CHOICES OF WINCHES: 12 VOLD DC, 120 VOLT AC	

CE 1500FB STANDARD EQUIPMENT	
WINCH/WIRE ROPE (See Below)	BATTERY CABLES WITH TERMINALS
SWIVEL LOAD BLOCK WITH SAFETY HOOK	MOUNTING BOLTS AND PLATES
PISTOL GRIP, REMOVABLE PENDANT CONTROL WITH 12 FT CORD	HANDSAVER BAR
80 AMP CIRCUIT BREAKER	MASTER DISCONNECT SWITCH KIT

PRICES

MODEL	PART #	WINCH	WIRE ROPE	INSTALL WEIGHT	SHIPPING WEIGHT	SELLING PRICE
CE1500FB	CE-057	12V-DC	25' X 3/16"	165#	220#	$1,768.00
CE1500FB-AC	CE057-AC	120V-AC	45' X 5/32"	165#	220#	$2,112.00

OPTIONS

DESCRIPTION	PART #	SELLING PRICE
CIRCUIT BREAKER KIT – Requires a minimum 150 AMP breaker	22946-150	$44.00
CUSTOM PAINT	**PART #**	
Paint code/sample required	24838	$368.00

F.O.B: CINCINNATI, OHIO

EFFECTIVE DATE: JUNE 22, 2015 **REV: AUGUST 5, 2015** **SUBJECT TO CHANGE WITHOUT NOTICE**

VENCO VENTURO INDUSTRIES LLC

VENTURO VAN CRANES

LIGHT DUTY VAN CRANES

VC500FB

SUGGESTED SELLING PRICE LIST

SPECIFICATIONS	
500 LB. MAXIMUM CAPACITY (BASED ON VAN FLOOR, NOT WINCH CAPACITY)	MANUAL 360 DEGREE ROTATION WITH BAND BRAKE
1,300 FT. / LB. RATING	FIXED LENGTH BOOM: 2 FT., 6 IN.
WINCH: 12 VOLT DC	

VC500FB STANDARD EQUIPMENT	
WINCH/WIRE ROPE (See Below)	BATTERY CABLES WITH TERMINALS
MASTER DISCONNECT SWITCH KIT	MOUNTING BOLTS AND PLATES
PISTOL GRIP, REMOVABLE PENDANT CONTROL WITH 12 FT CORD	HANDSAVER BAR

PRICES

MODEL	PART #	WINCH	WIRE ROPE	INSTALL WEIGHT	SHIPPING WEIGHT	SELLING PRICE
VC500FB	MFCAAA	12V-DC	25’ X 3/16”	165#	220#	$1,768.00

OPTIONS

DESCRIPTION	PART #	SELLING PRICE
CIRCUIT BREAKER KIT – Requires a minimum 150 AMP breaker	22946-150	$44.00
CUSTOM PAINT	**PART #**	
Paint code/sample required	24838	$368.00

Note: 500 LB maximum capacity is based on typical van floor structure limitations, not winch capacity. It is the sole responsibility of the installer to determine if additional floor reinforcement is necessary.

F.O.B: CINCINNATI, OHIO

EFFECTIVE DATE: MARCH 22, 2016 **REV: MARCH 22, 2016** **SUBJECT TO CHANGE WITHOUT NOTICE**

VENCO VENTURO INDUSTRIES LLC

VENTURO VAN CRANES

EURO-STYLE VAN CRANES

VC1000

SUGGESTED SELLING PRICE LIST

APPLICATIONS		
YEAR	**MANUFACTURER**	**BODY STYLE**
2016	FORD	TRANSIT (MID/HIGH ROOF)
Applications for the Ram Promaster, MB Sprinter, and Nissan NV are in process. Please contact our sales department for current availability.		

SPECIFICATIONS	
1000 LB. MAXIMUM CAPACITY	MANUAL ROTATION WITH HAND-LEVER BRAKE
6,000 FT. / LB. RATING	HORIZONTALLY ARTICULATED BOOM WITH 2' – 6' REACH
WINCH: 12 VOLT DC	TELESCOPING MAST FOR FORD TRANSIT MID OR HIGH ROOF APPLICATIONS

VC1000 STANDARD EQUIPMENT	
WINCH/WIRE ROPE (See Below)	BATTERY CABLES WITH TERMINALS
MASTER DISCONNECT SWITCH KIT	TOP/BOTTOM MOUNTING BRACKETS
PISTOL GRIP, REMOVABLE PENDANT CONTROL WITH 12 FT CORD	(2) HAND-LEVER CONTROLLED ROTATION STOPS
SINGLE HAND-CRANK JACKLEG OUTRIGGER*	MOUNTING HARDWARE AND FLOOR CHANNEL SHIMS

PRICES						
MODEL	**PART #**	**WINCH**	**WIRE ROPE**	**INSTALL WEIGHT**	**SHIPPING WEIGHT**	**SELLING PRICE**
VC1000	MGDAAA	12V-DC	25' X 3/16"	250#	320#	$2,988.00

OPTIONS		
DESCRIPTION	**PART #**	**SELLING PRICE**
CIRCUIT BREAKER KIT – Requires a minimum 150 AMP breaker	22946-150	$44.00
CUSTOM PAINT	**PART #**	
Paint code/sample required	24838	$368.00

Requires Class III receiver hitch, not included.

F.O.B: CINCINNATI, OHIO

EFFECTIVE DATE: JUNE 9, 2016 **REV: JUNE 9, 2016** **SUBJECT TO CHANGE WITHOUT NOTICE**

CONVERSION HOISTS**

SUGGESTED SELLING PRICE LIST

MODEL	CLASS	PART #	PUMP TYPE	BODY SIZE	WEIGHT	PRICE
VC416-ES	B/10	416400ES	MONARCH ELEC. SINGLE	8' - 12'	400	$1,708
VC416-ED	B/10	406400ED	MONARCH ELEC. DOUBLE	8' - 12'	400	$1,860
VC416-DM	B/10	416400PDSP-DG	DIRECT MOUNT GEAR: A-5/8-9	8' - 12'	440	$2,280
VC416-LDK	B/10	416400LDK	LESS DRIVE KIT (NO PUMP)	8' - 12'	390	$1,300
VC416SF-ES	B/10	416916ES	MONARCH ELEC. SINGLE	8' - 12'	500	$2,028
VC416SF-ED	B/10	416916ED	MONARCH ELEC. DOUBLE	8' - 12'	500	$2,184
VC416SF-DM	B/10	416916PDSP-DG	DIRECT MOUNT GEAR: A-5/8-9	8' - 12'	540	$2,516
VC416SF-LDK	B/10	416916LDK	LESS DRIVE KIT (NO PUMP)	8' - 12'	490	$1,592
VC516-ES	C/20	516400ES	MONARCH ELEC. SINGLE	8' - 12'	435	$1,772
VC516-ED	C/20	516400ED	MONARCH ELEC. DOUBLE	8' - 12'	435	$1,914
VC516-DM	C/20	516400PDSP-DG	DIRECT MOUNT GEAR: A-5/8-9	8' - 12'	475	$2,332
VC516-LDK	C/20	516400LDK	LESS DRIVE KIT (NO PUMP)	8' - 12'	425	$1,384
VC516SF-ES	C/20	516916ES	MONARCH ELEC. SINGLE	8' - 12'	535	$2,076
VC516SF-ED	C/20	516916ED	MONARCH ELEC. DOUBLE	8' - 12'	535	$2,224
VC516SF-DM	C/20	516916PDSP-DG	DIRECT MOUNT GEAR: A-5/8-9	8' - 12'	575	$2,548
VC516SF-LDK	C/20	516916LDK	LESS DRIVE KIT (NO PUMP)	8' - 12'	525	$1,664
VC520-ES	D/40	520500ES	MONARCH ELEC. SINGLE	12' - 15'	500	$2,064
VC520-ED	D/40	520500ED	MONARCH ELEC. DOUBLE	12' - 15'	500	$2,212
VC520-DM	D/40	520500PDSP-DG	DIRECT MOUNT GEAR: A-5/8-9	12' - 15'	540	$2,668
VC520-LDK	D/40	520500LDK	LESS DRIVE KIT (NO PUMP)	12' - 15'	480	$1,652
VC520SF-ES	D/40	520901ES	MONARCH ELEC. SINGLE	12' - 15'	620	$2,316
VC520SF-ED	D/40	520901ED	MONARCH ELEC. DOUBLE	12' - 15'	620	$2,472
VC520SF-DM	D/40	520901PDSP-DG	DIRECT MOUNT GEAR: A-5/8-9	12' - 15'	660	$2,824
VC520SF-LDK	D/40	520901LDK	LESS DRIVE KIT (NO PUMP)	12' - 15'	600	$2,040
VC620-ES	E/50	620200ES	MONARCH ELEC. SINGLE	12' - 16'	675	$2,504
VC620-ED	E/50	620200ED	MONARCH ELEC. DOUBLE	12' - 16'	675	$2,656
VC620-DM	E/50	620200PDSP-DG	DIRECT MOUNT GEAR: A-5/8-9	12' - 16'	765	$3,151
VC620-LDK	E/50	620200LDK	LESS DRIVE KIT (NO PUMP)	12' - 16'	625	$2,144
VC620SF-ES	E/50	620901ES	MONARCH ELEC. SINGLE	12' - 16'	775	$2,892
VC620SF-ED	E/50	620901ED	MONARCH ELEC. DOUBLE	12' - 16'	775	$3,048
VC620SF-DM	E/50	620901PDSP-DG	DIRECT MOUNT GEAR: A-5/8-9	12' - 16'	865	$3,412
VC620SF-LDK	E/50	620901LDK	LESS DRIVE KIT (NO PUMP)	12' - 16'	725	$2,512

***Venco hoists are designed for and intended to be used on stationary trucks dumping on firm and level ground. Spreading applications and/or shock unloading are strictly prohibited and will void any warranty.*

F.O.B: CINCINNATI, OHIO

EFFECTIVE DATE: JUNE 22, 2015 **REV: APR 14, 2015** **SUBJECT TO CHANGE WITHOUT NOTICE**

CONVERSION HOISTS**

SUGGESTED SELLING PRICE LIST

MODEL	CLASS	PART #	PUMP TYPE	BODY SIZE	WEIGHT	PRICE
VC628-ES	F/60	628000ES	MONARCH ELEC. SINGLE	14' - 18'	800	$2,888
VC628-ED	F/60	628000ED	MONARCH ELEC. DOUBLE	14' - 18'	800	$3,032
VC628-DM	F/60	628000PDSP-DG	DIRECT MOUNT GEAR:B-7/8-13	14' - 18'	900	$3,512
VC628-LDK	F/60	628000LDK	LESS DRIVE KIT (NO PUMP)	14' - 18'	750	$2,356
VC6620-DM	G/70	662000PDSP-DG	DIRECT MOUNT GEAR:B-7/8-13	14' - 18'	1050	$4,448
VC6620-LDK	G/70	662000LDK	LESS DRIVE KIT (NO PUMP)	14' - 18'	965	$3,320
VC6628-DM	J/90	662800PDSP-DG	DIRECT MOUNT GEAR:B-7/8-13	18' - 24'	1380	$5,024
VC6628-LDK	J/90	662800LDK	LESS DRIVE KIT (NO PUMP)	18' - 24'	1295	$3,846

OPTIONS FOR CONVERSION HOISTS		
DESCRIPTION	**PART #**	**PRICE**
CIRCUIT BREAKER – 250 AMP (ES, ED PUMPS)	22946-250	$52
MASTER DISCONNECT SWITCH (ES, ED PUMPS)	13451-K	$36
DM PUMP UPGRADE	520953	$80
ADD Part #520092 (B-7/8-13), DEDUCT 416277 (A-5/8-9)		
DM PUMP UPGRADE FOR Ford TorqShift® - AUTO TRANS	520953-1	$40
ADD Part #416655 (Ford TorqShift® – Auto), DEDUCT Part #416277 (A-5/8-9)		
LESS DM PUMP ONLY (416,516,520,620), DEDUCT Part #416277		-$152
LESS DM PUMP ONLY (628,6620,6628), DEDUCT Part #19296-10.0		-$260
FRAME WIDTH LESS THAN 34" NON-SUBFRAME HOIST	SPECIFY	$76
FRAME WIDTH LESS THAN 34" SUBFRAME HOIST	SPECIFY	$156
SUBSTITUTE STANDARD ROCKER HINGE WITH SHEAR PLATE HINGE		
ON VC416/VC516/VC520/VC620 NON-SUBFRAME HOISTS ONLY	520946	$66
LESS HINGE ASSEMBLY ON VC416 OR VC516	520915	-$84
LESS HINGE ASSEMBLY ON VC520 OR VC620	520915	-$84
LESS HINGE ASSEMBLY ON VC628 OR VC6620	662057-1	-$148
LESS HING ASSEMBLY ON VC6628	662806	-$148
SUBFRAME EXTENSION FOR 108" CA CHASSIS	520906-108	$132
SUBFRAME EXTENSION FOR 120" CA CHASSIS	520906-120	$132
AUXILIARY SAFETY PROP (TRUCK FRAME MOUNT) 10-12 FOOT BODY	662059-1	$148
AUXILIARY SAFETY PROP (TRUCK FRAME MOUNT) 13-15 FOOT BODY	662059-2	$148
AUXILIARY SAFETY PROP (TRUCK FRAME MOUNT) 16-18 FOOT BODY	662059-3	$148

***Venco hoists are designed for and intended to be used on stationary trucks dumping on firm and level ground. Spreading applications and/or shock unloading are strictly prohibited and will void any warranty.*

F.O.B: CINCINNATI, OHIO

EFFECTIVE DATE: JUNE 22, 2015 **REV: OCTOBER 30, 2015** **SUBJECT TO CHANGE WITHOUT NOTICE**

VP6 PICKUP HOISTS

SUGGESTED SELLING PRICE LIST

CHEVY, GMC 1999 – 2010 SILVERADO/SIERRA				
PART#	**BODY**	**PUMP TYPE**	**WEIGHT**	**PRICE**
6400-2ES	8' PICKUP	ELECTRIC SINGLE ACTING	380	$1,976
6400-2ED	8' PICKUP	ELECTRIC DOUBLE ACTING	380	$2,192
6400-1ES	7' - 9' PLATFORM	ELECTRIC SINGLE ACTING	380	$1,908
6400-1ED	7' - 9' PLATFORM	ELECTRIC DOUBLE ACTING	380	$2,124
*2004 – 2010 Gas models require relocation of the fuel vapor canister.				
CHEVY, GMC 2011 – 2014 NEW STYLE SILVERADO/SIERRA				
PART#	**BODY**	**PUMP TYPE**	**WEIGHT**	**PRICE**
6600-2ES	8' PICKUP	ELECTRIC SINGLE ACTING	380	$1,976
6600-2ED	8' PICKUP	ELECTRIC DOUBLE ACTING	380	$2,192
6600-1ES	7' - 9' PLATFORM	ELECTRIC SINGLE ACTING	380	$1,908
6600-1ED	7' - 9' PLATFORM	ELECTRIC DOUBLE ACTING	380	$2,124
*Silverado/Sierra models include body stiffener kit and bumper relocation kit as standard.				
CHEVY, GMC 2015 (PLATFORM ONLY)				
6600-1ES	7' - 9' PLATFORM	ELECTRIC SINGLE ACTING	380	$1,908
6600-1ED	7' - 9' PLATFORM	ELECTRIC DOUBLE ACTING	380	$2,124
FORD SUPERDUTY F-SERIES 1999 – 2015* (2011 – 2015* GAS ONLY)				
PART#	**BODY**	**PUMP TYPE**	**WEIGHT**	**PRICE**
6300-2ES	8' PICKUP	ELECTRIC SINGLE ACTING	300	$1,976
6300-2ED	8' PICKUP	ELECTRIC DOUBLE ACTING	300	$2,192
6300-1ES	7' - 9' PLATFORM	ELECTRIC SINGLE ACTING	300	$1,908
6300-1ED	7' - 9' PLATFORM	ELECTRIC DOUBLE ACTING	300	$2,124
**2012 - 2015 - In order to comply with the 2015 Ford Super Duty F-Series Incomplete Vehicle Manual FMVSS (Federal Motor Vehicle Safety Standard) 301 Fuel System Integrity, installation of the Venco VP hoist is prohibited on trucks with a GVWR of 10,000 lbs. or less, because the hoist requires modification to some or all of the following: fuel tank attachment hardware, fuel filler cap, pipe, hose, attachment hardware and/or trailer hitch receiver. For more details, please consult the Ford Super Duty F-Series Incomplete Vehicle Manual, March 2014, FC34-19A268-AB.*				
All models include body stiffner kit, bumper relocation kit and safety prop as standard.				

***Venco hoists are designed for and intended to be used on stationary trucks dumping on firm and level ground. Spreading applications and/or shock unloading are strictly prohibited and will void any warranty.*

PART#	DESCRIPTION	APPLICATIONS	PRICE
13451-K	Master Disconnect Switch	ALL MODELS	$36
22946-250	250AMP Circuit Breaker	ALL MODELS	$52
Specify	Less Pump Kit	ALL MODELS	-$304

F.O.B: CINCINNATI, OHIO

EFFECTIVE DATE: JUNE 22, 2015 **REV: AUGUST 5, 2015** **SUBJECT TO CHANGE WITHOUT NOTICE**

PART NUMBER	EFFECTIVE DATE
78-0022	01/01/15

US WEATHER GUARD® Van Product Pricing

MODEL	DESCRIPTION	TRADE
205-3	All-Purpose Van Rack-Steel	281.00
205-5	All-Purpose Van Rack-Steel	281.00
2056-3	Accessory Cross Member	146.00
2056-5	Accessory Cross Member	146.00
209-3	All-Purpose Van Rack - Aluminum	396.00
2097-3	Accessory Cross Member	216.00
210-3	Safari Rack 3 Pcs	1092.00
216-3	All-Purpose Van Rack	423.00
216-5	All-Purpose Van Rack	423.00
218-3	All Purpose Van Rack Mini - Aluminum	392.00
220-3	All Purpose Van Rack Mini	247.00
221-3	Accessory Cross Member	134.00
222-3	Accessory Cross Member	230.00
223-3-01	Quick Clamp Rack Mini	638.00
224-3-01	Quick Clamp Rack Mini	750.00
225-3	Accessory Cross Member For 223-3	294.00
229-3	All-Purpose Van Rack	565.00
233-3-01	Accessory Cross Member	278.00
234-3-01	Quick Clamp Rack	830.00
236-3-01	Quick Clamp Rack	750.00
237	Conduit Carrier - Aluminum 11 ft	504.00
238	Conduit Carrier Extension	90.00
239	Conduit Carrier Kit	141.00
250	Sliding Ladder Rack	256.00
2501	Accessory Warning Light Holder	112.00
2502	Accessory Mirror Holder	82.00
2503	Accessory Velcro Straps	40.00
2504	Accessory Mirror	93.00
2505	KUV Mounting Bracket	186.00
2506	Nissan NV High Roof Rack Mounting Kit	394.00
2507	Nissan NV Standard Roof Rack Mounting Kit	394.00
2508F	RAM ProMaster Street Side Mounting Kit	36.00
2509T	EZ-GLIDE® System, Universal Drive Tube	46.00
2510F	Universal Roof-top Mounting Kit	41.00
2511	Accessory Cross Member Use with 251	265.00
251-3-02	EZ-GLIDE® System Drop Down Rack	1333.00
2521	Accessory Cross Member Use with 252	265.00
252-3-02	EZ-GLIDE® System Drop Down Rack	1333.00
253	EZ-GLIDE® System Drop Down Rack	1432.00
254	Drivers Side Clamp Kit	257.00
255	Drivers Side Drop Down Kit	1031.00
280-3-01	EZ-GLIDE® System, High Roof vans	1981.00
281	EZ-GLIDE® System, 8 ft Hi-Cube Vans	1381.00
282	EZ-GLIDE® System, 10 ft Hi-Cube Vans	1632.00
283	EZ-GLIDE® System, 8 ft D/S Hi-Cube Vans	1381.00
284	EZ-GLIDE® System, 10 ft D/S Hi-Cube Vans	1632.00
285-3-01	EZ-GLIDE® System, Low Roof Vans	1751.00
286-3-01	EZ-GLIDE® System, Driver Side kit, High roof van	1470.00
287-3-01	EZ-GLIDE® System, Driver Side kit, Low roof van	1223.00
301-3	PACK RAT® Drawer Unit	906.00
303-3	PACK RAT® Drawer Unit	1045.00
304-3	PACK RAT® Drawer Unit	1016.00
305-3	PACK RAT® Drawer Unit	756.00
306-3	PACK RAT® Drawer Unit	955.00
307-3	PACK RAT® Drawer Unit	1132.00
308-3	PACK RAT® Drawer Unit	1332.00
308-5	PACK RAT® Drawer Unit	1332.00
310-3-01	PACK RAT® Drawer Unit 12 in x 42 in x 17 in	1022.00
312-3	PACK RAT® Drawer Unit	886.00
314-3	ITEMIZER® Drawer Unit	491.00

MODEL	DESCRIPTION	TRADE
316-3	ITEMIZER® Drawer Unit	806.00
317-3	ITEMIZER® Drawer Unit	1219.00
318-3	ITEMIZER® Drawer Unit	1460.00
326-3	ITEMIZER® Drawer Unit	876.00
327-3	ITEMIZER® Drawer Unit	1247.00
328-3	ITEMIZER® Drawer Unit	1493.00
334-3	PACK RAT® Drawer Unit	1192.00
335-3	PACK RAT® Drawer Unit	814.00
336-3	PACK RAT® Drawer Unit	1063.00
337-3	PACK RAT® Drawer Unit	1242.00
338-3	PACK RAT® Drawer Unit	1476.00
338-5	PACK RAT® Drawer Unit	1476.00
3100	BED RAT® Sliding Platform	1329.00
3200	BED RAT® Sliding Platform	1551.00
3400	BED RAT® Sliding Platform	1765.00
8230-3-01	Welded Shelf Unit, 36 in x 12 in x 30 in	309.00
8313-3	Lockable Cabinet 20 in x 20 in x 17 in	244.00
8316-3	Lockable Cabinet 21 in x 20 in x 14 in	296.00
8401-3-01	EZ-Cube Dividers	94.00
8502-3-01	EZ-Cube Shelf Door, 42 in	131.00
8503-3-01	EZ-Cube Shelf Door, 51 in	136.00
88021	Ford Van Window Screen, Side Door	86.00
88022	Ford Van Window Screen, Rear Door	86.00
88023	Ford Van Window Screen, Sliding Side Door	86.00
88026	GM Van Window Screen, Sliding Side Door	86.00
88027	GM Van Window Screen, Side Door	86.00
88028	GM Van Window Screen, Rear Door	86.00
88040	Sprinter Van Window Screen, Side Door	87.00
88041	Sprinter Van Window Screen, Rear Door	87.00
88042	Ram CV Van Window Screen, Sliding Side Door	87.00
88043	Ram CV Van Window Screen, Rear Window	87.00
88044	Ram CV Van Window Screen, Rear Door	87.00
88045	Transit Connect Window Screen, Rear Door	87.00
88046	Transit Connect Window Screen, Side Door	87.00
88047	Transit Connect Window Screen, Rear Window	87.00
88050	ProMaster Van Window Screen, Rear Door	87.00
88051	ProMaster Van Window Screen, Side Door	87.00
88052	ProMaster Van Window Screen, Side Door	87.00
8841	Shelf Mat, 14 in	64.00
8866	Fire Extinguisher	50.00
8867-3-01	Work Top, 42 in	112.00
8873-3-01	Extension Cord Brackets 3	42.00
8875	Hard Hat Bracket	20.00
8877-3	Practice Holder	38.00
89011	Universal Floor Mat	314.00
89015	GM Floor Mat	313.00
89017	Ford Floor Mat	313.00
89020	ProMaster 118 in wheel base Floor Mat	257.00
89021	ProMaster 136 in wheel base Floor Mat	273.00
89022	ProMaster 159 in wheel base Floor Mat	298.00
89023	ProMaster 159 in extended wheel base Floor Mat	324.00
89024	Transit 130 in wheel base Floor Mat	282.00
89025	Transit 148 in wheel base Floor Mat	308.00
89026	Transit 159 in extended wheel base Floor Mat	333.00
9010-3-01	Cab Command Console 18 in x 7-1/2 in x 20 in	185.00
9012-3-01	Cab Command Center 18 in x 13 in x 20 in	293.00
9020-3-01	Lockable Cabinet, no shelf 22 in x 18 in x 16 in	259.00
9021-3-01	Lockable Cabinet, 1 shelf 22 in x 18 in x 16 in	303.00
9029-3-01	Cabinet Base, w/bin 22 in x 18 in x 16 in	265.00
9036-3	Strong Box	630.00
9040-3-01	Lockable Secure Storage Module 42 in x 17 in x 16 in	367.00
9045-3-02	5 Drawer Secure Storage Module 42 in x 17 in x 16 in	470.00
9053-3-01	Adjustable 3 Shelf Set 36 in x 13 in	118.00
9073-3-01	Adjustable 4 Shelf Set 36 in x 13 in	194.00
9074-3-01	Adjustable 4 Shelf Set 42 in x 13 in	227.00
9075-3-01	Adjustable 4 Shelf Set 52 in x 13 in	255.00

MODEL	DESCRIPTION	TRADE
9076-3-01	Adjustable 4 Shelf Set 60 in x 13 in	317.00
9103-3-01	Starter 2 Shelf Set 36 in x 13 in	108.00
9104-3-01	Starter 3 Shelf Set 42 in x 16 in	154.00
9105-3-01	Starter 3 Shelf Set 52 in x 16 in	182.00
9106-3-01	Starter 3 Shelf Set 60 in x 16 in	242.00
9107-3-01	Starter 4 Shelf Set 42 in x 16 in	227.00
9108-3-01	Starter 4 Shelf Set 52 in x 16 in	255.00
9109-3-01	Starter 4 Shelf Set 60 in x 16 in	317.00
9113-3-01	Accessory Shelf, 36 in x 10 in	88.00
9114-3-01	Accessory Shelf, 42 in x 10 in	102.00
9115-3-01	Accessory Shelf, 52 in x 10 in	109.00
9116-3-01	Accessory Shelf, 60 in x 10 in	139.00
9133-3-01	Accessory Shelf, 36 in x 13 in	94.00
9134-3-01	Accessory Shelf, 42 in x 13 in	107.00
9135-3-01	Accessory Shelf, 52 in x 13 in	114.00
9136-3-01	Accessory Shelf, 60 in x 13 in	144.00
9153-3-01	Adjustable 3 Shelf Set 36 in x 13 in	159.00
9154-3-01	Adjustable 3 Shelf Set 42 in x 13 in	164.00
9155-3-01	Adjustable 3 Shelf Set 52 in x 13 in	187.00
9156-3-01	Adjustable 3 Shelf Set 60 in x 13 in	241.00
9163-3-01	Accessory Shelf, 36 in x 16 in	98.00
9164-3-01	Accessory Shelf, 42 in x 16 in	107.00
9165-3-01	Accessory Shelf, 52 in x 16 in	117.00
9166-3-01	Accessory Shelf, 60 in x 16 in	132.00
9173-3-01	Heavy Duty Adjustable Shelf Set 36 in x 13 in	116.00
9174-3-01	Heavy Duty Adjustable Shelf Set 42 in x 13 in	138.00
9175-3-01	Heavy Duty Adjustable SHELF SET 52 in x 13 in	159.00
9176-3-01	Heavy Duty Adjustable Shelf Set 60 in x 13 in	181.00
9183-3-01	Heavy Duty Adjustable 3 Shelf Set 36 in x 16 in	186.00
9184-3-01	Heavy Duty Adjustable 3 Shelf Set 42 in x 16 in	191.00
9185-3-01	Heavy Duty Adjustable 3 Shelf Set 52 in x 16 in	219.00
9186-3-01	Heavy Duty Adjustable 3 Shelf Set 60 in x 16 in	282.00
9193-3-01	Heavy Duty Adjustable 4 Shelf Set 36 in x 16 in	244.00
9194-3-01	Heavy Duty Adjustable 4 Shelf Set 42 in x 16 in	244.00
9195-3-01	Heavy Duty Adjustable 4 Shelf Set 52 in x 16 in	269.00
9196-3-01	Heavy Duty Adjustable 4 Shelf Set 60 in x 16 in	353.00
9203-3-01	Square End Panel Set (34 in H x 13 in D)	99.00
9204-3-01	Tapered End Panel Set (44 in H x 16 in D)	103.00
9206-3-01	Tapered End Panel Set (60 in H x 16 in D)	129.00
9233-3-01	Heavy Duty Square End Panel Set (36 in H x 13 in D)	130.00
9234-3-01	Tapered End Panel Set (46 in H x 13 in D)	139.00
9236-3-01	Tapered End Panel Set (60 in H x 13 in D)	159.00
9264-3-01	Heavy Duty Tapered End Panel Set (46 in H x 16 in D)	163.00
9266-3-01	Heavy Duty Tapered End Panel Set (62 in H x 16 in D)	199.00
9333-3-02	Heavy Duty Adjustable 2 Shelf Unit, 36 in x 36 in x 13 in (2 boxes)	246.00
9334-3-02	Heavy Duty Adjustable 2 Shelf Unit, 42 in x 36 in x 13 in (2 boxes)	268.00
9336-3-02	Heavy Duty Adjustable 2 Shelf Unit, 60 in x 36 in x 13 in (2 boxes)	311.00
9343-3-02	Heavy Duty Adjustable 3 Shelf Unit, 36 in x 46 in x 16 in (2 boxes)	349.00
9344-3-02	Heavy Duty Adjustable 3 Shelf Unit, 42 in x 46 in x 16 in (2 boxes)	354.00
9345-3-02	Heavy Duty Adjustable 3 Shelf Unit, 52 in x 46 in x 16 in (2 boxes)	382.00
9346-3-02	Heavy Duty Adjustable 3 Shelf Unit, 60 in x 46 in x 16 in (2 boxes)	445.00
9353-3-01	Adjustable 3 Shelf Unit, 36 in x 46 in x 13 in (2 boxes)	298.00
9354-3-01	Adjustable 3 Shelf Unit, 42 in x 46 in x 13 in (2 boxes)	303.00
9355-3-01	Adjustable 3 Shelf Unit, 52 in x 46 in x 13 in (2 boxes)	326.00
9356-3-01	Adjustable 3 Shelf Unit, 60 in x 46 in x 13 in (2 boxes)	380.00
9363-3-02	Heavy Duty Adjustable 4 Shelf Unit, 36 in x 62 in x 16 in (2 boxes)	443.00
9364-3-02	Heavy Duty Adjustable 4 Shelf Unit, 42 in x 62 in x 16 in (2 boxes)	443.00
9365-3-02	Heavy Duty Adjustable 4 Shelf Unit, 52 in x 62 in x 16 in (2 boxes)	468.00
9366-3-02	Heavy Duty Adjustable 4 Shelf Unit, 60 in x 62 in x 16 in (2 boxes)	552.00
9373-3-01	Adjustable 4 Shelf Unit, 36 in x 60 in x 13 in (2 boxes)	353.00
9374-3-01	Adjustable 4 Shelf Unit, 42 in x 60 in x 13 in (2 boxes)	386.00
9375-3-01	Adjustable 4 Shelf Unit, 52 in x 60 in x 13 in (2 boxes)	414.00
9376-3-01	Adjustable 4 Shelf Unit, 60 in x 60 in x 13 in (2 boxes)	476.00
9380-3-02	Heavy Duty Shelf unit w/Lockable Secure Storage Module, 42 in x 46 in x 16 in (3 boxes)	625.00
9385-3-02	Heavy Duty Shelf unit w/5 Drawer Secure Storage Module, 42 in x 46 in x 16 in (3 boxes)	728.00
9390-3-02	Heavy Duty Shelf unit w/Lockable Secure Storage Module, 42 in x 62 in x 16 in (3 boxes)	661.00

MODEL	DESCRIPTION	TRADE
9395-3-02	Heavy Duty Shelf unit w/5 Drawer Secure Storage Module, 42 in x 62 in x 16 in (3 boxes)	764.00
9400-3-01	EZ-Cube, 42 in x 42 in x 14 in	423.00
9444-3-01	Wheel Well Cabinet, 42 in x 15 in x 14 in	268.00
9452-3-01	EZ-Cube, 51 in x 42 in x 14 in	481.00
9503-3-01	Shelf Door, 36 in	144.00
9504-3-01	Shelf Door, 42 in	143.00
9505-3-01	Shelf Door, 52 in	169.00
9506-3-01	Shelf Door, 60 in	220.00
9603-3-01	Accessory Back Panel, 36 in	64.00
9604-3-01	Accessory Back Panel, 42 in	66.00
9605-3-01	Accessory Back Panel, 52 in	68.00
9606-3-01	Accessory Back Panel, 60 in	69.00
96101-3-01	Bulkhead, Full Size Van Ford &GM, Window	515.00
96102-3-01	Bulkhead, Full Size Van Ford &GM, Screen	338.00
96111-3-01	Bulkhead, 2010-2013 Transit Connect Mesh	274.00
96111-3-02	Bulkhead, New 2014 Transit Connect Mesh	274.00
96114-3-01	Bulkhead, Chevy City Express/ NV200 Mesh	274.00
96115-3-01	Bulkhead, Ram CV Mesh	274.00
96121-3-01	Bulkhead, Sprinter, Window	579.00
96122-3-01	Bulkhead, Sprinter, Mesh	472.00
96141-3-01	Bulkhead, RAM ProMaster, Window	579.00
96142-3-01	Bulkhead, RAM ProMaster, Screen	472.00
96201-3-01	Bulkhead, Nissan NV, Window	579.00
96301-3-01	Bulkhead, Transit Low Roof, Window	463.00
96302-3-01	Bulkhead, Transit Low Roof, Mesh	340.00
96311-3-01	Bulkhead, Transit Mid Roof, Window	540.00
96312-3-01	Bulkhead, Transit Mid Roof, Mesh	437.00
96321-3-01	Bulkhead, Transit High Roof, Window	566.00
96322-3-01	Bulkhead, Transit High Roof, Mesh	463.00
96511-3-01	Bulkhead, 2010-2013 Transit Connect Window	329.00
96511-3-02	Bulkhead, New 2014 Transit Connect Window	329.00
96514-3-01	Bulkhead, Chevy City Express/ NV200 Window	329.00
96515-3-01	Bulkhead, RAM C/V Window	329.00
96901-3-01	Swing Door Conversion Kit	77.00
96902-3-01	Mesh Panel Bulkhead Adapter Kit	59.00
96903-3-01	Solid Panel Bulkhead Adapter Kit	42.00
9703-3-01	Retainer Lip, 36 in	54.00
9704-3-01	Retainer Lip, 42 in	59.00
9705-3-01	Retainer Lip, 52 in	63.00
9706-3-01	Retainer Lip, 60 in	68.00
9720-3-01	Nissan Mounting Bracket kit	41.00
9730-3-01	Shelf Support for 60 in wide shelves, 36 in high	106.00
9740-3-01	Shelf Support for 60 in wide shelves, 46 in high	106.00
9760-3-01	Shelf Support for 60 in wide shelves, 62 in high	106.00
9822-3-01	Divider insert set for 2 in deep drawers	36.00
9823	Bin Dividers, 13 in	37.00
9824-3-01	Divider insert set for 4 in deep drawers	30.00
9826	Bin Dividers, 16 in	41.00
9832	Shelf Mat for 13 in deep shelves	63.00
9836	Shelf Mat for 16 in deep shelves	63.00
9854-7-01	REDZONE Small 9 Bin Set 16 in	95.00
9855-7-01	REDZONE Medium 6 Bin Set 16 in	147.00
9856-7-01	REDZONE Large 3 Bin Set 16 in	157.00
9858-7-01	REDZONE Small 6 Bin Set 13 in	63.00
9859-7-01	REDZONE Medium 6 Bin Set 13 in	118.00
9860-3-01	Catalog File Unit,6 in x 36 in x 12 in	103.00
9861-3-01	Cable Reel Holder, Floor Mount	313.00
9862-3-01	Refrigerant Tank Rack 3x 30#	295.00
9863-3-01	Refrigerant Tank Rack 2x 30#, 1x 50#	318.00
9864-3-01	Refrigerant Tank Rack 4x 30#	283.00
9866-3-01	Three Reel Cable Holder, Floor Mount	386.00
9871-3-01	Door Organizer, Closed trays	133.00
9872-3-01	Door Organizer, tool tray	133.00
9873-3-01	Door Organizer, open trays	133.00
9874-7-01	REDZONE Can Organizer	27.00
9876-3-01	First Aid Kit Pkt	69.00

MODEL	DESCRIPTION	TRADE
9878-7-01	REDZONE Cleaning Station	67.00
9879-7-01	REDZONE Tool Organizer	26.00
9880-3-01	Literature Holder 6 compartment	121.00
9881-7-01	REDZONE Caulk Tube Tray	44.00
9882-7-01	REDZONE Wire Spool Holder End Mount	84.00
9883-7-01	REDZONE Large Parts Bin	31.00
9884-7-01	REDZONE Medium Parts Bin	26.00
9885-7-01	REDZONE 5 Gallon Bucket Holder	31.00
9886-7-01	REDZONE 30# Refrigerant Tank Holder	36.00
9887-7-01	REDZONE Ladder Holder	5.00
9891-7-01	REDZONE Large hook (5 in dia)	6.00
9892-7-01	REDZONE 2 hook holder (5 in dia)	9.00
9893-7-01	REDZONE 3 hook cord or tool holder	10.00
9906-3-02	Parts Cabinet 6 Bins 32 in x 12 in x 4 in	173.00
9909-3-02	Parts Cabinet 9 Bin 16 in x 12 in x 12 in	215.00
9912-3-02	2 Drawer Cabinet 16 in x 14 in x 12 in	222.00
9914-3-02	4 Drawer Cabinet 16 in x 14 in x 12 in	250.00
9918-3-02	Parts Cabinet 18 Bin 32 in x 12 in x 12 in	305.00
9924-3-02	4 Drawer Cabinet 16 in x 14 in x 24 in	380.00
9928-3-02	8 Drawer Cabinet 16 in x 14 in x 24 in	503.00
9950-7-02	Parts Box Cabinet 20 in x 14 in x 13 in	97.00
9951-9-01	Parts Box, Adj Compartments 18 in x 13 in x 3 in	77.00
9953-7-01	REDZONE Grab And Go Tool Cart	275.00
9984-3-01	4 Drawer Cabinet 18 in x 14 in x 24 in	427.00
9988-3-01	8 Drawer Cabinet 18 in x 14 in x 24 in	566.00
9992-3-01	Van Top Shelf for Secure Storage Shelf Units, 42 in x 13 in	95.00
9993-3-01	Shelf Accessory Mounting Kit, 13 in Deep Shelf	0.00
9996-3-01	Shelf Accessory Mounting Kit, 16 in Deep Shelf	0.00
	VAN PACKAGES	
600-8000	Starter VAN Package for Full-Size Ford & GM	1135.00
600-8002	Starter VAN 52" Package for Full-Size Ford & GM	1163.00
600-8040	Starter VAN Package for High Roof ProMaster	1630.00
600-8050	Starter General Service Van Package for Full-Size Ford & GM	1350.00
600-8075	Starter Contractor/ Remodler Van Package for Full-Size Ford & GM	1546.00
600-8110L	Commercial Shelving Package for Full-Size, 148 WB TRANSIT	1639.00
600-8110R	Commercial Shelving Package for Full-Size, 130 WB TRANSIT	1559.00
600-8111L	General Service/ Contractor Package for Full-Size, 148 WB TRANSIT	2191.00
600-8111R	General Service/ Contractor Package for Full-Size, 130 WB TRANSIT	2111.00
600-8112L	Cable/ Plumber Package for Full-Size, 148 WB TRANSIT	2217.00
600-8112R	Cable/ Plumber Package for Full-Size, 130 WB TRANSIT	2137.00
600-8113L	HVAC/ Mechanical Package for Full-Size, 148 WB TRANSIT	2669.00
600-8113R	HVAC/ Mechanical Package for Full-Size, 130 WB TRANSIT	2612.00
600-8114L	Electrical Contractor Package for Full-Size, 148 WB TRANSIT	2762.00
600-8114R	Electrical Contractor Package for Full-Size, 130 WB TRANSIT	2656.00
600-8210L	Commercial Shelving Package for Mid-Roof, 148 WB TRANSIT	2003.00
600-8210R	Commercial Shelving Package for Mid-Roof, 130 WB TRANSIT	1910.00
600-8211L	General Service/ Contractor Package for Mid-Roof, 148 WB TRANSIT	2752.00
600-8211R	General Service/ Contractor Package for Mid-Roof, 130 WB TRANSIT	2656.00
600-8212L	Cable/ Plumber Package for Mid-Roof, 148 WB TRANSIT	2778.00
600-8212R	Cable/ Plumber Package for Mid-Roof, 130 WB TRANSIT	2682.00
600-8213L	HVAC/ Mechanical Package for Mid-Roof, 148 WB TRANSIT	3221.00
600-8213R	HVAC/ Mechanical Package for Mid-Roof, 130 WB TRANSIT	3127.00
600-8214L	Electrical Contractor Package for Mid-Roof, 148 WB TRANSIT	3323.00
600-8214R	Electrical Contractor Package for Mid-Roof, 130 WB TRANSIT	3201.00
600-8240	Basic Package for High Roof ProMaster	2012.00
600-8241	Contractor Package for High Roof ProMaster	2829.00
600-8242	Plumber Package for High Roof ProMaster	3530.00
600-8243	HVAC/Mechanical Package for High Roof ProMaster	3300.00
600-8244	Electrical Contractor Package for High Roof ProMaster	3594.00
600-8310	Commercial Shelving Package for Compact 2014 TRANSIT CONNECT	1126.00
600-8311L	General Service Package for Compact 2014 TRANSIT CONNECT	2095.00
600-8311S	General Service Package for Compact 2014 TRANSIT CONNECT	1589.00
600-8312L	Plumbing Package for Compact 2014 TRANSIT CONNECT	2350.00
600-8313L	HVAC/ Mech Package for Compact 2014 TRANSIT CONNECT	1996.00
600-8314L	Electrical Contractor Package for Compact 2014 TRANSIT CONNECT	1735.00
600-8320	Commercial Shelving Package for Compact CITY EXPRESS/ NV200	1126.00

MODEL	DESCRIPTION	TRADE
600-8321	General Service Package for Compact CITY EXPRESS/ NV200	2095.00
600-8322	Plumbing Package for Compact CITY EXPRESS/ NV200	2350.00
600-8323	HVAC/ Mech Package for Compact CITY EXPRESS/ NV200	1996.00
600-8324	Electrical Contractor Package for Compact CITY EXPRESS/ NV200	1735.00
600-8410L	Commercial Shelving Package for High Roof, 148 WB TRANSIT	2029.00
600-8410X	Commercial Shelving Package for High Roof, 170 XWB TRANSIT	2474.00
600-8411L	General Service/ Contractor Package for High Roof, 148 WB TRANSIT	2778.00
600-8411X	General Service/ Contractor Package for High Roof, 170 XWB TRANSIT	3490.00
600-8412L	Cable/ Plumber Package for High Roof, 148 WB TRANSIT	2804.00
600-8412X	Cable/ Plumber Package for High Roof, 170 XWB TRANSIT	3542.00
600-8413L	HVAC/ Mechanical Package for High Roof, 148 WB TRANSIT	3247.00
600-8413X	HVAC/ Mechanical Package for High Roof, 170 XWB TRANSIT	4072.00
600-8414L	Electrical Contractor Package for High Roof, 148 WB TRANSIT	3349.00
600-8414X	Electrical Contractor Package for High Roof, 170 XWB TRANSIT	4206.00
600-9100	Basic Package for Full-Size Ford & GM	1633.00
600-9101	Contractor Package for Full-Size Ford & GM	3141.00
600-9102	Plumber Package for Full-Size Ford & GM	3505.00
600-9103	HVAC/Mechanical Package for Full-Size Ford & GM	3866.00
600-9104	Electrical Package for Full-Size Ford & GM	5294.00
600-9130	Basic Package for Full-Size NISSAN	1820.00
600-9131	Contractor Package for Full-Size NISSAN	3300.00
600-9132	Plumber Package for Full-Size NISSAN	3270.00
600-9133	HVAC/Mechanical Package for Full-Size NISSAN	3872.00
600-9134	Electrical Package for Full-Size NISSAN	5359.00
600-9200	Basic Package for High Roof SPRINTER	2203.00
600-9201	Contractor Package for High Roof SPRINTER	4742.00
600-9202	Plumber Package for High Roof SPRINTER	4860.00
600-9203	HVAC/Mechanical Package for High Roof SPRINTER	5115.00
600-9204	Electrical Package for High Roof SPRINTER	6277.00
600-9230	Basic Package for High Roof NISSAN	2133.00
600-9231	Contractor Package for High Roof NISSAN	4471.00
600-9232	Plumber Package for High Roof NISSAN	3662.00
600-9233	HVAC/Mechanical Package for High Roof NISSAN	3891.00
600-9234	Electrical Package for High Roof NISSAN	6189.00
	SPECIAL ORDER PARTS - 12 WEEK EXTENDED LEAD TIME (check w/Customer Service for a	
8393-3-01	Jumbo Shelf, 24 in x 42 ¼ in x 59 ½ in	465.00
8394-3-01	Jumbo Shelf, 24 in x 51 ¼ in x 59 ½ in	515.00
8395-3-01	Jumbo Shelf, 24 in x 69 ¼ in x 59 ½ in	609.00
8118-3-01	Bin Dividers, 24 in	39.00
8908-3	Parts Cabinet, 8 Drawer	181.00
8931-3	Parts Box Cabinet	282.00
	REPLACEMENT PARTS	
70102	18 in Door Support Cables (2)	39.20
70136	White touch-up paint (½ ounce brush tip)	13.10
70201	Shelf End Panel Cap	23.50
70202	Cam Handle set	26.90
70203	Back panel fastener kit	23.50
70204	Cabinet Shelf	23.50
70208	Replacement Door for 9021	49.90
70212	Shelf Door Service kit	49.90
70214	Plastic bin for parts cabinet	23.50
70215	Replacement Window Panels	167.60
70216	Bolt kit for Full Size Van Bulkhead	39.20
70217	Bolt kit for Nissan Van Bulkhead	39.20
70218	Bolt kit for Sprinter Van Bulkhead	39.20
70219	Bolt kit for Transit Connect Van Bulkhead	39.20
70220	Bolt kit for RAM CV Van Bulkhead	39.20
70221	Bolt kit for Van Shelf End Panel	84.70
70222	Bolt kit for Van Shelf Kit	23.50
70223	Nissan M8 Bolt Kit	39.20
70271	Replacement Latch Kit	7.70
70283	Replacement Red Strap for Tank Rack	23.50
7070	23-3/8 in Door Support Cable (2)	7.70
7073	Locking End Cap #239	39.20
7074	Closed End Cap 239	23.50
7120-3	Shelf Lip FOR 8452	7.70

MODEL	DESCRIPTION	TRADE
7202	Mounting Hardware	7.70
7203	Mounting Hardware	7.70
7209	Drawer Removal Tool	7.70
7220	Accessory Cabinet Mounting Kit 14 in	7.70
7458-100BG	5/16 in Blin D Fasteners bulk bag of 100 w/installation tool only	133.70
7458-50BG	5/16 in Blin D Fasteners bulk bag of 50 w/installation tool only	84.70
7459-100BG	¼ in Blin D Fasteners bulk bag of 100 w/installation tool only	84.70
7459-50BG	¼ in Blin D Fasteners bulk bag of 50 w/installation tool only	42.30
7601	T Bracket	7.70
7604	Mounting Spacer Kit (50 pcs)	39.20
7774	Bolt Kit for 239	7.70
7793	Spacer Kit - Van Shelving	23.50
7857	Lexan Only R-86510	84.70
7885	Bolt Kit/Clamp/Bracket	84.70
7940	Shelving Mounting Bracket	7.70
7967	Van Bulkhead Bracket Kit	84.70
7968	Van Bulkhead Bolt Kit	39.20
7998-100BG	¼ in Blin D Fasteners bulk bag of 100 w/bolts, washers, & tool	127.00
7998-10PK	¼ in Blin D Fasteners for rigid fastening to sheet metal, fiberglass, & plastics	23.50
7998-20PK	¼ in Blin D Fasteners for rigid fastening to sheet metal, fiberglass, & plastics	39.20
7998-50BG	¼ in Blin D Fasteners bulk bag of 50 w/bolts, washers, & tool	63.50
817	Jack Nut Parts Kit	23.50
837	Replacement Door for 237	84.70
839	Front Body for 237	276.50
840	Rear Body for 237	276.50
865	Handle for Van Drawers	7.70
886-1CN	White aerosol touch-up paint (12 ounce aerosol)	30.00
887-1CN	Black aerosol touch-up paint (12 ounce aerosol)	30.00
888	Black touch-up paint (½ ounce brush tip)	13.10
923	Shelf Door Cable	17.50
954-1CN	Red aerosol touch-up paint (12 ounce aerosol)	51.40
999-100BG	5/16 in Blin D Fasteners bulk bag of 100 w/bolts, washers, & tool	200.30
999-10PK	5/16 in Blin D Fasteners for rigid fastening to sheet metal, fiberglass, & plastics	39.20
999-20PK	5/16 in Blin D Fasteners for rigid fastening to sheet metal, fiberglass, & plastics	53.10
999-50BG	5/16 in Blin D Fasteners bulk bag of 50 w/bolts, washers, & tool	100.20
	PACK RAT® and ITEMIZER® DRAWER PARTS	
70133	Handle Kit for PACK RAT® Drawer Units, black	15.00
70134	Non-Skid Wear Strip for PACK RAT® & ITEMIZER® Drawer Units	15.00
70303	Roller Track for ITEMIZER® Drawer Units	23.50
70304	Roller Replacement Kit	7.70
70305	Drawer Roller Kit	7.70
70306-1	Inner Body Roller Kit	7.70
70903	Red push-button assembly for PACK RAT® Drawer Units	10.10
7231	BRG RetroFit Kit for 3300, 3400	84.70
7300	Dividers for ITEMIZER® Drawer Units	23.50
7301	Latch Assembly w/Mounting Hardware	7.70
7307	ITEMIZER® Outer body Roller Kit, all models	7.70
7637-XX	Lock for PACK RAT® Drawer Units (XX=key code)	15.00
7758	Bolt Kit for ITEMIZER® Drawer Units	15.00
841	Front drawer roller (6 in) for 305-3, 335-3	15.00
842	Front drawer roller (8 in) for 306-3, 336-3	39.20
843	Front drawer roller (10 in) for 301-3/303-3/307-3/307-3/308-3/312-3/334-3/337-3/338-3	39.20
844	Rear drawer bearing for all PACK RAT® Drawer Units	7.70
845	Nut, bolt, washer for 844	7.70
908	Latch Assembly for PACK RAT® Drawer Units	23.50
	LOCKS & LATCHES	
70205	D-ring handle kit (RH01)	53.10
70206-XX	Secure Storage lock kit (XX=key/lock code)	23.50
70209	Drawer cabinet lock kit (RH01)	23.50
70210-XX	Drawer cabinet Key Alike kit (XX=key/lock code)	53.10
70211-XX	D-ring handle kit (XX=key/lock code)	53.10
7135	Sliding Door Latch kit	23.50
7229	Lock for 314	15.00
7399	Handle Latch Assembly for Bulkhead Door R-86000 & R-87000	53.10
929-3	Paddle Handle Lock with Striker for Van Cabinet Doors	39.20
	VAN LADDER RACK PARTS - EZ-GLIDE® System Parts - Fits current and previous generation	

MODEL	DESCRIPTION	TRADE
70016	Bolt Kit for Sprinter Mounting	23.50
70018	Sprinter RetroKit 03-06- 07+	456.00
70019	Bolt Kit for 252 (GM)	422.20
70065	EZ-GLIDE® 251 or 251-3-02 Rear Cross Member w/Hardware	332.00
70066	EZ-GLIDE® 251 or 251-3-02 Front Cross Member w/Hardware	332.00
70067	EZ-GLIDE® 252 or 252-3-02 Rear Cross Member w/Hardware	332.00
70068	EZ-GLIDE® 252 or 252-3-02 Front Cross Member w/Hardware	332.00
70069	EZ-GLIDE® 251-3-01 Rear Cross Member w/Hardware	332.00
70070	EZ-GLIDE® 251-3-01 Front Cross Member w/Hardware	332.00
70071	EZ-GLIDE® 252-3-01 Rear Cross Member w/Hardware	332.00
70072	EZ-GLIDE® 252-3-01 Front Cross Member w/Hardware	332.00
70073	EZ-GLIDE® Front Upper w/Hardware	167.60
70074	EZ-GLIDE® Rear Upper w/Hardware	167.60
70075	EZ-GLIDE® Rear Drive Handle Right	519.20
70076	EZ-GLIDE® Rear Drive Handle Left	519.20
70077	EZ-GLIDE® Center Connect Bar	167.60
70078	EZ-GLIDE® Front Drive Assembly	167.60
70079	EZ-GLIDE® L Post w/Hardware	84.70
70080	EZ-GLIDE® Hydraulic Cylinder w/Hardware	456.00
70081	EZ-GLIDE® Drive Arm w/Hardware	84.70
70082	EZ-GLIDE® Z Post w/Hardware	84.70
70083	EZ-GLIDE® Rotation Arm w/Hardware	84.70
70084	EZ-GLIDE® Ladder Stop w/Hardware	84.70
70085	EZ-GLIDE® Mounting Bracket Ford w/Hardware	167.60
70086	EZ-GLIDE® Mounting Bracket GM w/Hardware	167.60
70087	EZ-GLIDE® Rotation Hardware Kit	58.60
70088	EZ-GLIDE® Rotation Bushing Kit	58.60
70089	EZ-GLIDE® Guttered Hardware Kit, Ford	58.60
70090	EZ-GLIDE® Guttered Hardware Kit, GM	58.60
7035	Red Cap Handle	7.70
7325	Passenger Side Rear Slide Down	1508.70
7362	Handle Assembly Kit for 254	84.70
7367	Front Ladder Clamp for 254	58.60
7368	Rear Ladder Stop for 254	58.60
7461	SPRINTER/Cube Van Drive Shaft	1092.40
7488	Gutter Clamp for Sprinter Hi Roof	167.60
7489	Upper Lower Handle for Sprinter Hi Roof	332.00
7582	Full size/ Mini- Van drive Shaft	478.00
7584	Drivers Side Rear Slide Down	1508.70
7837	End Stand	58.60
	VAN LADDER RACK PARTS	
70147	Center Rail for 234-3-01	167.60
70148	Passenger Side Front Rail for 234-3-01	167.60
70149	Driver Side Front Rail for 234-3-01	167.60
7494	Airfoil for Models 233, 234, 236	84.70
7495	Cross Member for Models 233, 234, 236	84.70
7499	Airfoil for Models 209, 218, 219, 222, 223, 224, 225, 229, 2095, 2097	39.20
7500	Airfoil for Models 211, 213, 2136	23.50
7508	Clamp Bracket for 239	7.70
7509	U BOLT/CLAMP #239	7.70
751	BOLT KIT FOR #237	7.70
7512	DOOR STOP FOR #237	39.20
7533	PLATE ADJ.CENTER 210	23.50
7534	BRACKET RAIL SUPP. 210	23.50
7552	BRACKET SWIV.ALUM. 237	39.20
7564	Driver Side Front Stand for Models 220 & 221	23.50
7565	Passenger Side Front Stand for Models 220, 221	23.50
7577-3-01	Passenger Side Handle for Models 223,224,225,233,234,236	58.60
7578-3-01	Driver Side Handle for Models 233, 234, 236	84.70
7595-3	Cross Member for Model: 205, 215, 216, 220, 221, 2055, 2056	39.20
7595-5	Cross Member for Model: 205, 215, 216, 220, 221, 2055, 2056	39.20
7596	RED TIPS® Kit for Racks(Qty 6): 205/209/215/216/219/229/2055/2056/2095/2097	7.70
7597-3	End Stand for Models 205, 215, 216, 2055, 2056	39.20
7597-5	End Stand for Models 205, 215, 216, 2055, 2056	39.20
7600	Bolt Kit for Models 205, 215, 216, 2055, 2056	15.00
7603-3	Center Stand for Models 205, 215, 216, 2055, 2056	23.50

MODEL	DESCRIPTION	TRADE
7603-5	Center Stand for Models 205, 215, 216, 2055, 2056	23.50
7686	Bolt Kit for Models 211, 213, 2136	39.20
7687	RED TIPS® Kit for Models 211, 213, 2136	39.20
7691	Cross Member for Models 218 & 222	307.50
7692	Bolt Kit For Models 218, 222	84.70
7693	RED TIPS® Kit For Models 218, 222	39.20
7694	Stand Kit for Models 223, 224, 225	53.10
7695	CROSS MEMBER	53.10
7696	Bolt Kit for Models 220, 221	84.70
7697	RED TIPS® Kit for Models 220, 221	15.00
7698	Driver Side Rear Stand for Models 220 & 221	39.20
7699	Passenger Side Rear Stand for Models 220, 221	39.20
7700	Center Stand for Models 220 & 221	39.20
7701	Rear Cross Member for Models 223, 224, 225	234.00
7705	Front Cross Member for Models 223, 224, 225	234.00
7706	Bolt Kit for Models 223, 224, 225	133.70
7707	Ladder Stop for Models 223, 224, 225, 233, 234, 236	133.70
7708	Red Cap Kit	39.20
7709	Bolt Kit for Models 233, 234, 236	98.80
7710	Universal 8 in Clamp for Models 209, 210, 219, 229, 233, 234, 236, 2095, 2097	53.10
7711	RED TIPS® Kit for Models 233, 234, 236	39.20
7712	Center Rail for Models 233, 234, 236	234.00
7830-3-01	Passenger Side Rail for Models 223, 224, 225	167.60
7831-3-01	Driver Side Rail for Models 223, 224, 225	167.60
7832	Driver Side Front Rail for Models 233, 234, 236	167.60
7833-3-01	Driver Side Rear Rail for Models 233-01, 234-01, 236-01	133.70
7834	Passenger Side Front Rail for Models 233, 234, 236	167.60
7835-3-01	Passenger Side Rear Rail for Models 233-01, 234-01, 236-01	133.70
7836	Center Support for Models 233, 234, 236	39.20
7839	End Stand for Models 209, 219, 229, 2095, 2097	133.70
7840	Center Stand for Models 209, 219, 229, 2095, 2097	133.70
7841	Cross Member for Models 209, 219, 229, 2095, 2097	133.70
7842	Bolt Kit for Models 209, 219, 229, 2095, 2097	39.20
7843	Mounting Cushion	23.50
7844	Driver Side Front/Passenger Side Rear Rail for Model 210	234.00
7845	Driver Side Rear/Passenger Side Front Rail for Model 210	234.00
7846	End Stand for Model 210	84.70
7867	Center Stand for Model 210	84.70
7868	Cross Member for Model 210	486.00
7869	Bolt Kit for Model 210	84.70
7870	Ladder Guide for Models 209/218/219/222/223/224/225/229/233/234/236/2095/2097	15.00
7877	Velcro Ladder Strap	7.70
7878	Wear Strip	39.20
7883	Tie Down Loop for Models 205, 215, 216, 2055, 2056	39.20
7888-3	Mounting Clamp w/Spacer Kit: 205/215/216/2055/2056	39.20
7888-5	Mounting Clamp w/Spacer Kit: 205/215/216/2055/2056	39.20
7947	Sliding Ladder Rack - Safety Cable Assembly	7.70
7948	Sliding Ladder Rack - Shock Cord (2)	7.70
7949	Sliding Ladder Rack - Bolt Kit	39.20
856-01	Gas Spring for 223-3, 224-3, 225-3, 234-3, 236-3, 1235, 1236	39.20
884-3	Airfoil for Models 205, 210, 215, 216, 220, 221, 2055, 2056	39.20

PRICES ARE US FUNDS

List updated December 2014

weather guard®

Terms and Conditions of Sale are available online.
To place an order, contact Customer Service at:
TOLL FREE: 1-800-456-7865 Fax: 1-800-334-2981
©2013 Knaack LLC, 420 E. Terra Cotta Ave.,
Crystal Lake, IL 60014

EFFECTIVE DATE
1/1/2015

US WEATHER GUARD® Truck Product Pricing

Model	DESCRIPTION	Trade
114-0-01	Cross Box - Aluminum Extra Wide	963.00
114-5-01	Cross Box - Aluminum Extra Wide	963.00
115-3-01	Cross Box - Steel Extra Wide	937.00
116-3-02	Saddle Box - Steel Extra Wide	903.00
116-5-02	Saddle Box - Steel Extra Wide	903.00
117-0-02	Saddle Box - Aluminum Extra Wide	879.00
117-3-02	Saddle Box - Aluminum Extra Wide	879.00
117-5-02	Saddle Box - Aluminum Extra Wide	879.00
120-3-01	Saddle Box - Steel Low-Profile	805.00
120-5-01	Saddle Box - Steel Low-Profile	805.00
121-0-01	Saddle Box - Aluminum Low-Profile	806.00
121-5-01	Saddle Box - Aluminum Low-Profile	806.00
123-0-01	Saddle Box-Aluminum Extra Deep	975.00
123-5-01	Saddle Box-Aluminum Extra Deep	975.00
124-0-01	Cross Box - Aluminum	913.00
124-5-01	Cross Box - Aluminum	913.00
125-3-01	Cross Box - Steel	838.00
125-5-01	Cross Box - Steel	838.00
126-3-02	Saddle Box - Steel	805.00
126-5-02	Saddle Box - Steel	805.00
127-0-02	Saddle Box - Aluminum	806.00
127-3-02	Saddle Box - Aluminum	806.00
127-5-02	Saddle Box - Aluminum	806.00
128-3-01	Saddle Box - Steel Extra Deep	941.00
131-0-01	Saddle Box - Aluminum Low-Profile	802.00
131-5-01	Saddle Box - Aluminum Low-Profile	802.00
136-3-01	Saddle Box - Steel Deep	878.00
137-0-01	Saddle Box-Aluminum Deep	791.00
137-5-01	Saddle Box-Aluminum Deep	791.00
143-0-01	Saddle Box - Aluminum E-Line™	693.00
143-5-01	Saddle Box - Aluminum E-Line™	693.00
154-0-01	Saddle Box - Aluminum	778.00
154-5-01	Saddle Box - Aluminum	778.00
156-3-01	Saddle Box - Steel	829.00
160-3-01	Pork Chop Box - Steel	524.00
161-3-01	Pork Chop Box - Steel	524.00
162-3-01	Pork Chop Box - Steel	553.00
163-3-01	Pork Chop Box - Steel	553.00
164-0-01	Lo-Side Box - Aluminum	740.00
164-5-01	Lo-Side Box - Aluminum	740.00
165-3-01	Lo-Side Box - Steel	723.00
166-3-01	Super-Lo Box - Steel	779.00
170-0-01	Pork Chop Box - Aluminum	535.00
170-5-01	Pork Chop Box - Aluminum	535.00
171-0-01	Pork Chop Box - Aluminum	535.00
171-5-01	Pork Chop Box - Aluminum	535.00
172-0-01	Pork Chop Box - Aluminum	570.00
172-5-01	Pork Chop Box - Aluminum	570.00
173-0-01	Pork Chop Box - Aluminum	570.00
173-5-01	Pork Chop Box - Aluminum	570.00
174-0-01	Lo-Side Box - Aluminum	590.00
174-3-01	Lo-Side Box - Aluminum	590.00
174-5-01	Lo-Side Box - Aluminum	590.00
175-3-01	Lo-Side Box - Steel	601.00
176-3-01	Super-Lo Box - Steel	661.00
176-5-01	Super-Lo Box - Steel	661.00
178-0-01	Low Profile Side Box - Aluminum	698.00
178-5-01	Low Profile Side Box - Aluminum	698.00
179-0-01	Low Profile Side Box - Aluminum	698.00
179-5-01	Low Profile Side Box - Aluminum	698.00

Model	DESCRIPTION	Trade
180-0-01	Low Profile Side Box - Aluminum	595.00
180-5-01	Low Profile Side Box - Aluminum	595.00
181-0-01	Low Profile Side Box - Aluminum	595.00
181-5-01	Low Profile Side Box - Aluminum	595.00
184-0-01	Lo-Side Box - Aluminum	552.00
184-3-01	Lo-Side Box - Aluminum	552.00
184-5-01	Lo-Side Box - Aluminum	552.00
185-3-01	Lo-Side Box - Steel	567.00
186-3-01	Super-Lo Box - Steel	607.00
200-3	Accessory Tray	113.00
201-3	Accessory Parts Cabinet	275.00
202-3	Accessory Tray	99.00
246-3-02	Hi-Side Box	667.00
247-3-02	Super-Side Box	721.00
264-3-02	Hi-Side Box	881.00
265-3-02	Super-Side Box	937.00
272-3-02	Hi-Side Box	910.00
290-3-02	Hi-Side Box	934.00
291-3-02	Super-Side Box	994.00
296-3-02	Hi-Side Box	962.00
297-3-02	Jumbo Super-Side Box	1123.00
300	PACK RAT® Dividers	41.00
301-3	PACK RAT® Drawer Unit	906.00
302	PACK RAT® Dividers	47.00
303-3	PACK RAT® Drawer Unit	1045.00
304-3	PACK RAT® Drawer Unit	1016.00
305-3	PACK RAT® Drawer Unit	756.00
306-3	PACK RAT® Drawer Unit	955.00
307-3	PACK RAT® Drawer Unit	1132.00
308-3	PACK RAT® Drawer Unit	1332.00
308-5	PACK RAT® Drawer Unit	1332.00
312-3	PACK RAT® Drawer Unit	886.00
334-3	PACK RAT® Drawer Unit	1192.00
335-3	PACK RAT® Drawer Unit	814.00
336-3	PACK RAT® Drawer Unit	1063.00
337-3	PACK RAT® Drawer Unit	1242.00
338-3	PACK RAT® Drawer Unit	1476.00
338-5	PACK RAT® Drawer Unit	1476.00
346-0-02	Hi-Side Box - Aluminum	639.00
346-5-02	Hi-Side Box - Aluminum	639.00
347-0-02	Super-Side Box - Aluminum	686.00
347-5-02	Super-Side Box - Aluminum	686.00
350-3-01	Transfer Tank - Mini, 50 Gallon	668.00
350-5-01	Transfer Tank - Mini, 50 Gallon	668.00
352-3-01	Transfer Tank, 75 Gallon	779.00
352-5-01	Transfer Tank, 75 Gallon	779.00
354-3-01	Transfer Tank, 90 Gallon	846.00
354-5-01	Transfer Tank, 90 Gallon	846.00
358-3-01	Transfer Tank, 100 Gallon	774.00
358-5-01	Transfer Tank, 100 Gallon	774.00
360-3-01	Transfer Tank, 110 Gallon	941.00
360-5-01	Transfer Tank, 110 Gallon	941.00
364-0-02	Hi-Side Box - Aluminum	830.00
364-5-02	Hi-Side Box - Aluminum	830.00
365-0-02	Super-Side Box - Aluminum	877.00
365-5-02	Super-Side Box - Aluminum	877.00
372-0-02	Hi-Side Box - Aluminum	850.00
372-5-02	Hi-Side Box - Aluminum	850.00
390-0-02	Hi-Side Box - Aluminum	921.00
390-5-02	Hi-Side Box - Aluminum	921.00
391-0-02	Super-Side Box - Aluminum	1043.00
391-3-02	Super-Side Box - Aluminum	1043.00
391-5-02	Super-Side Box - Aluminum	1043.00
396-0-02	Hi-Side Box - Aluminum	948.00
396-5-02	Hi-Side Box - Aluminum	948.00
524-3-02	Underbed Box - Steel	423.00

Model	DESCRIPTION	Trade
524-5-02	Underbed Box - Steel	423.00
525-3-02	Underbed Box Mini - Steel	361.00
525-5-02	Underbed Box Mini - Steel	361.00
530-3-02	Underbed Box - Steel	466.00
530-5-02	Underbed Box - Steel	466.00
536-3-02	Underbed Box - Steel	520.00
536-5-02	Underbed Box - Steel	520.00
538-3-02	Jumbo Underbed Box - Steel	597.00
538-5-02	Jumbo Underbed Box - Steel	597.00
548-3-02	Underbed Box - Steel	587.00
548-5-02	Underbed Box - Steel	587.00
550-3-02	Jumbo Underbed Box - Steel	690.00
550-5-02	Jumbo Underbed Box - Steel	690.00
560-3-02	Underbed Box - Steel	735.00
560-5-02	Underbed Box - Steel	735.00
562-5-02	Jumbo Underbed Box - Steel	812.00
610	Removable Tool Box	30.00
613-3	Accessory Divider Tray	72.00
614-3	Accessory Divider Tray	76.00
615	Accessory Divider Tray	77.00
617	Accessory Divider Tray	91.00
618	Plastic Parts Bin	17.00
619-3	Tote Tray	66.00
620-3	Tote Tray	70.00
622-0-02	Underbed Box - Aluminum	426.00
622-5-02	Underbed Box - Aluminum	426.00
627-0-02	Underbed Box - Aluminum	571.00
631-0-02	Underbed Box - Aluminum	645.00
631-5-02	Underbed Box - Aluminum	645.00
636-0-02	Underbed Box - Aluminum	712.00
636-5-02	Underbed Box - Aluminum	712.00
638-0-02	Underbed Box - Aluminum	771.00
644-0-01	All-Purpose Chest - Aluminum	562.00
644-5-01	All-Purpose Chest - Aluminum	562.00
645-3-01	All-Purpose Chest - Steel	603.00
648-0-02	Underbed Box - Aluminum	840.00
650-0-02	Underbed Box - Aluminum	934.00
654-0-01	All-Purpose Chest - Aluminum	675.00
654-5-01	All-Purpose Chest - Aluminum	675.00
655-3-01	All-Purpose Chest - Steel	664.00
660-0-02	Underbed Box - Aluminum	932.00
660-5-02	Underbed Box - Aluminum	932.00
662-0-02	Underbed Box - Aluminum	1075.00
664-0-01	All-Purpose Chest - Aluminum	704.00
664-5-01	All-Purpose Chest - Aluminum	704.00
665-3-01	All-Purpose Chest - Steel	675.00
665-5-01	All-Purpose Chest - Steel	675.00
674-0-01	All-Purpose Chest - Aluminum	651.00
674-5-01	All-Purpose Chest - Aluminum	651.00
675-3-01	All-Purpose Chest - Steel	637.00
684-0-01	All-Purpose Chest - Aluminum	874.00
684-5-01	All-Purpose Chest - Aluminum	874.00
685-3-01	All-Purpose Chest - Steel	762.00
911	Accessory Tray	38.00
913-3	Dividers - For 911 Tray	25.00
1200	Full Size Truck ATR™	817.00
1205	Compact Size Truck ATR™	740.00
1210	ATR® Accessory Side rails 150"	636.00
1211	ATR® Accessory Side rails 132"	591.00
1215	ATR® Accessory Cross Member 67"	129.00
1218	ATR® Accessory Quick Release	56.00
1225	Service Body Rack - Steel	998.00
1225-3	Service Body Rack - Steel	954.00
1245	Truck Rack - Short Bed	801.00
1246	Airfoil	55.00
1247	Airfoil	55.00

Model	DESCRIPTION	Trade
1259	Truck Rack Screen	313.00
1275	Truck Rack - Long Bed	836.00
1280	Ladder Rack Legs/Rails	739.00
1281	Cross Member Kit, GM/Chevrolet	189.00
1282	Cross Member Kit, Dodge	189.00
1283	Cross Member Kit, Ford Std. Duty	189.00
1284	Cross Member Kit, Ford Sup. Duty	189.00
1285	Accessory Cab Screen	313.00
1287	Cross Member Kit, Dodge	189.00
1345	Mini Rack Short Rail	801.00
1375	Mini Rack Long Rail	820.00
1425-3	Service Body Rack - Aluminum	530.00
1450	WEEKENDER® Ladder Rack	384.00
1450-3	WEEKENDER® Ladder Rack	366.00
1451-3	1/2 Set of 1450-3 (Rear)	235.00
1451-5	1/2 Set of 1450 (Rear)	235.00
1475	WEEKENDER® Ladder Rack	392.00
1060-3	FAST RACK® Accessory Cross Member	106.00
1060-5	FAST RACK® Accessory Cross Member	106.00
1904-3-02	PROTECT-A-RAIL® Cab Protector	431.00
1904-5-02	PROTECT-A-RAIL® Cab Protector	431.00
1905-0-02	PROTECT-A-RAIL® Cab Protector	419.00
1906-3-02	PROTECT-A-RAIL® Cab Protector	320.00
1906-5-02	PROTECT-A-RAIL® Cab Protector	320.00
1907-0-02	PROTECT-A-RAIL® Cab Protector	210.00
1908	H.D. PROTECT-A-RAIL® Cab Protector	285.00
1910-3-01	PROTECT-A-RAIL® Cab Protector	320.00
1910-5-01	PROTECT-A-RAIL® Cab Protector	320.00
1912-3-01	Mounting Base, Dodge	106.00
1912-5-01	Mounting Base, Dodge	106.00
1913-3	Mounting Base, Ford	106.00
1913-5	Mounting Base, Ford	106.00
1915-3-01	Mounting Base, Ford	105.00
1915-5-01	Mounting Base, Ford	105.00
1916-3	Mounting Base, GM	105.00
1916-5	Mounting Base, GM	105.00
1917	Accessory Ladder Mounting Extension	64.00
1918	Accessory Round Base, Center	38.00
1918-3	Accessory Top Mounting Light	38.00
1919	Accessory Round Base, Side	46.00
1920	Accessory Rectangular Base	57.00
1921-3-01	Dodge Bed Mounting Kit	105.00
1921-5-01	Dodge Bed Mounting Kit	105.00
3100	BED RAT® Sliding Platform	1329.00
3200	BED RAT® Sliding Platform	1551.00
3400	BED RAT® Sliding Platform	1765.00
QDSKSA01	Quick Draw Starter Kit - Saddle Box	395.00
QDKSBD01	Quick Draw Add-On Kit - Side Box Driver	133.00
QDKSBP01	Quick Draw Add-On Kit - Side Box Passenger	133.00
QDFOB01	Quick Draw FOB	139.00
	REPLACEMENT PARTS	
7144	Safety Stop Pin for BED RAT®	13.30
7293	Cable Bracket Kit for 3100	67.80
7296	Cable Bracket Kit for 3200	104.10
7297	Cable Bracket Kit for 3300	67.80
7298	Cable Bracket Kit for 3400	105.40
355-1PK	Vented Fuel Cap for Transfer Tanks	38.70
7009-2PK	Gas Spring 2-Pack for 121-X-01, 123-X-01, 123, 123-X, 127-X-01, 127, 127-X, R-127, 131-X-01, 137-X-01, 137, 137-X, 147-X-01, 154-X-01, 6212-X	97.00
7010-2PK	Gas Spring 2-Pack for 174, 174-X, R-174, R-174-B, 184, R-184, R-184-B	106.70
7011-2PK	Gas Spring 2-Pack for 176-X	106.70

Model	DESCRIPTION	Trade
7069-2PK	14" Door Support Cables for standard size steel & aluminum Hi-Sides	21.50
7071-2PK	16" Door Support Cables for Super-Side Boxes except Jumbo Super-Side & Underbed	21.50
7095-2PK	Gas Spring 2-Pack for 160-X-01, 161-X-01, 164-X-01, 165-X-01, 166-X-01, 170-X-01, 170, 170-X, 171-X-01, 171, 171-X, 172-X-01, 172, 172-X, 173-X-01, 173, 173-X, 174-X-01, 175-X-01, 184-X-01, 185-X-01, 186-X-01, 644-X-01, 645-X-01, 654-X-01, 654, 654-X, 654-B, 655-X-01, 664-X-01, 664-X, 664, 664-B, 674-X-01, 674-X, 674, 674-B, 675-X-01	97.00
7096-2PK	Gas Spring 2-Pack for 162-X-01, 163-X-01, 166-X-01, 665-X-01, 665-X, 665, 665-B	97.00
7105-B	Mounting Bracket for 1910	17.40
7102-3	Leg For Lo-Side Box	43.10
7102-B	Leg For Lo-Side Box	43.10
7106-1PK	Latch Striker and Plate Kit	21.50
7248-2PK	Gas Spring 2-Pack for 116-3, 116-X, R-116	106.70
7249-2PK	Gas Spring 2-Pack for 117-X-01, 117, 117-X, R-117, 126-X-01, 126-X, R-126, 128-X-01, 128-X	97.00
7250-2PK	Gas Spring 2-Pack for 136-X-01, 136-X, R-136, 156-X-01, 156-X, R-156,	97.00
7251-2PK	Gas Spring 2-Pack for 116-X-01, 158-X, R-158	97.00
7252-2PK	Gas Spring 2-Pack for 154, 154-X, R-154	106.70
7748-1PK	EXTREME PROTECTION® Lock single replacement lock	54.40
7791	Touch-Up Kit (Black)	32.40
7838-2PK	EXTREME PROTECTION® Lock Retro Fit Kit dual locks fit new and retrofit older models	114.40
7900-2PK	Gas Spring 2-Pack for 115-X-01, 115-X, R-115, 157-X, R-157	97.00
7901-2PK	Gas Spring 2-Pack for 166-X	106.70
7902-2PK	Gas Spring 2-Pack for 165-X-01, 176-X-01, 655, 655-X, 675, 675-X, 684-X-01, 684, 684-X	97.00
7904-2PK	Gas Spring 2-Pack for 685-X-01, 685-X	97.00
7917-2PK	Gas Spring 2-Pack for 114-X-01, 114, 114-X, 114-B, 124-X-01, 124, 124-X, 124-B, 134, 134-X, 134-B, 153, 153-X, 153-B, 159, 159-B, 191, 193	97.00
7998-10PK	1/4" Blind Fasteners for rigid fastening to sheet metal, fiberglass, & plastics	23.50
7998-20PK	1/4" Blind Fasteners for rigid fastening to sheet metal, fiberglass, & plastics	39.20
886-1CN	White aerosol touch-up paint (12 ounce aerosol)	30.00
887-1CN	Black aerosol touch-up paint (12 ounce aerosol)	30.00
900-2PK	Gas Spring 2-Pack for 125-X-01, 125-X, R-125, R-125-B, 135-X, R-135, 155-X,R-155	97.00
918-2PK	Gas Spring 2-Pack for 162-X, 162, 163-X, 163	106.70
921-4PK	Ball Studs and Nuts 4-Pack for Gas Springs	15.60
923	12 1/2" Door Cable	17.50
932-2PK	Gas Spring 2-Pack for 165-X, 186-X, 630, 630-X	106.70
933-2PK	Gas Spring 2-Pack for 160-X, 160,161-X, 161,164-X, R-164,R-164-B,175-X,185-X, 624, 624-X	106.70

Model	DESCRIPTION	Trade
999-10PK	5/16" Blind Fasteners for rigid fastening to sheet metal, fiberglass, & plastics	39.20
999-20PK	5/16" Blind Fasteners for rigid fastening to sheet metal, fiberglass, & plastics	53.10
	SADDLE BOX COVERS - CURRENT STYLE	
7782-0	Cover for 117-0-01	519.30
7782-5	Cover for 117-5-01	519.30
7783-0	Cover for 123-0-01, 127-0-01	469.70
7783-5	Cover for 123-5-01, 127-5-01	469.70
7784-0	Cover for 137-0-01, 154-0-01	451.40
7784-5	Cover for 137-5-01, 154-5-01	451.40
7861-3	Cover for a 116-3-01	313.20
7861-5	Cover for a 116-5-01	313.20
7864-3	Cover for a 126-3-01, 128-3-01	392.60
7864-5	Cover for a 126-5-01, 128-5-01	392.60
7871-3	Cover for a 136-3-01, 156-5-01	436.70
7871-5	Cover for a 136-5-01, 156-5-01	436.70
7893-0	Cover for a 147-0-01, 6212	489.60
7950-0	Cover for a 121-0-01	489.60
7950-5	Cover for a 121-5-01	489.60
7952-0	Cover for a 131-0-01	451.40
7952-5	Cover for a 131-5-01	451.40
7975-0-01	Cover for a 143-0-01	235.40
7975-5-01	Cover for a 143-5-01	235.40
7980-3-01	Cover for 120-3-01	392.60
7980-5-01	Cover for 120-5-01	392.60
	SADDLE BOX COVERS - PREVIOUS STYLE	
7159-3	Cover for 116-3	353.00
7161-3	Cover for 126-3, 128-3, R-126	418.70
7161-5	Cover for 126-5, 128-5, R-126-B	418.70
7180C	Cover for 117	558.10
7180-5	Cover for 117-5-01	558.10
7181C	Cover for 127, 123	509.10
7181-5	Cover for 127-5, 123-5	509.10
	CROSS BOX COVERS - CURRENT STYLE	
7796-0	Cover for 114-0-01	321.50
7796-5	Cover for 114-5-01	321.50
7797-0	Cover for 124-0-01	284.60
7797-5	Cover for 124-5-01	284.60
7873-3	Cover for 115-3-01	323.60
7874-3	Cover for 125-3-01	289.50
7874-5	Cover for 125-5-01	289.50
	CROSS BOX COVERS - PREVIOUS STYLE	
7179C	Cover for 124, 134, 153	336.10
	ALL-PURPOSE CHEST COVERS CURRENT STYLE - Check serial number for proper cover o	
7798-0	Cover for 644-0-01 (serial #052341XXXX)	293.70
7798-5	Cover for 644-5-01 (serial #052341XXXX)	293.70
7799-0	Cover for 654-0-01 (serial #052341XXXX)	345.10
7799-5	Cover for 654-5-01 (serial #052341XXXX)	345.10
7800-0	Cover for 664-0-01 (serial #052341XXXX)	348.10
7800-5	Cover for 664-5-01 (serial #052341XXXX)	348.10
7808-0	Cover for 674-0-01 (serial #052341XXXX)	306.50
7808-5	Cover for 674-5-01 (serial #052341XXXX)	306.50
7809-0	Cover for 684-0-01 (serial #052341XXXX)	386.80
7809-5	Cover for 684-5-01 (serial #052341XXXX)	386.80
7935-3	Cover for 665-3-01	284.90
7935-5	Cover for 665-5-01	284.90
7936-3	Cover for 675-3-01	254.50
7937-3	Cover for 685-3-01	269.20
7942-0	Cover for 644-0-01 (serial #052351XXXX)	296.40
7942-5	Cover for 644-5-01 (serial #052351XXXX)	296.40
7943-0	Cover for 654-0-01 (serial #052351XXXX)	345.10
7943-5	Cover for 654-5-01 (serial #052351XXXX)	345.10
7944-0	Cover for 664-0-01 (serial #052351XXXX)	348.10
7944-5	Cover for 664-5-01 (serial #052351XXXX)	348.10

Model	DESCRIPTION	Trade
7945-0	Cover for 674-0-01 (serial #052351XXXX)	306.50
7945-5	Cover for 674-5-01 (serial #052351XXXX)	306.50
7946-0	Cover for 684-0-01 (serial #052351XXXX)	383.30
7946-5	Cover for 684-5-01 (serial #052351XXXX)	383.30
7933-3	Cover for 645-3-01	226.70
7934-3	Cover for 655-3-01	279.00
	ALL-PURPOSE CHEST COVERS - PREVIOUS STYLE	
7188C	Cover for 664	359.60
	LOW PROFILE SIDE BOX COVERS - CURRENT STYLE	
70103-0	Cover for 178/179-0-01	558.40
70103-5	Cover for 178/179-5-01	558.40
70104-0	Cover for 180/181-0-01	352.80
70104-5	Cover for 180/181-5-01	352.80
	LO-SIDE BOX COVERS - CURRENT STYLE	
	CURRENT STYLE - Check serial number for proper cover o	
7785-0	Cover for 164-0-01 (serial #052341XXXX)	408.70
7785-5	Cover for 164-5-01 (serial #052341XXXX)	408.70
7786-0	Cover for 174-0-01 (serial #052341XXXX)	335.10
7786-5	Cover for 174-5-01 (serial #052341XXXX)	335.10
7787-0	Cover for 184-0-01 (serial #052341XXXX)	335.10
7787-5	Cover for 184-5-01 (serial #052341XXXX)	335.10
7887-3	Cover for 165-3-01	391.40
7905-3	Cover for 166-3-01	366.60
7906-3	Cover for 175-3-01	248.50
7912-3	Cover for 176-3-01	259.30
7912-5	Cover for 176-5-01	259.30
7914-3	Cover for 185-3-01	279.00
7925-3	Cover for 186-3-01	328.20
7938-0	Cover for 164-0-01 (serial #052351XXXX)	408.70
7938-5	Cover for 164-5-01 (serial #052351XXXX)	408.70
7939-0	Cover for 174-0-01 (serial #052351XXXX)	335.10
7939-5	Cover for 174-5-01 (serial #052351XXXX)	335.10
7941-0	Cover for 184-0-01 (serial #052351XXXX)	335.10
7941-5	Cover for 184-5-01 (serial #052351XXXX)	335.10
	PORK CHOP BOX COVERS - CURRENT STYLE	
7788-0	Cover for 170-0-01	309.40
7788-5	Cover for 170-5-01	309.40
7789-0	Cover for 171-0-01	309.40
7789-5	Cover for 171-5-01	309.40
7790-0	Cover for 172-0-01	345.10
7790-5	Cover for 172-5-01	345.10
7795-0	Cover for 173-0-01	348.10
7795-5	Cover for 173-5-01	348.10
7926-3	Cover for 160-3-01	204.80
7927-3	Cover for 161-3-01	204.80
7928-3	Cover for 162-3-01	216.50
7932-3	Cover for 163-3-01	216.50
	UNDERBED DOORS - CURRENT STYLE	
70226-3-02	Door for 524-3-02	358.20
70226-5-02	Door for 524-5-02	358.20
70227-3-02	Door for 525-3-02	314.90
70227-5-02	Door for 525-5-02	314.90
70228-3-02	Door for 530-3-02	351.40
70228-5-02	Door for 530-5-02	351.40
70229-3-02	Door for 536-3-02	375.30
70229-5-02	Door for 536-5-02	375.30
70230-3-02	Door for 538-3-02	398.60
70230-5-02	Door for 538-5-02	398.60
70231-3-02	Door for 548-3-02	416.20
70231-5-02	Door for 548-5-02	416.20
70232-3-02	Door for 550-3-02	443.70
70232-5-02	Door for 550-5-02	443.70
70233-3-02	Door for 560-3-02	466.60
70233-5-02	Door for 560-5-02	466.60
70234-5-02	Door for 562-5-02	488.40
70235	Latch Rods 524/525/622/627	39.20

Model	DESCRIPTION	Trade
70236	Door Chain (2) for 525/622	46.90
70237	Latch Rods 530/631	39.70
70238	Latch Rods 548/550/648/650	52.80
70239-0-02	Door for 622-0-02	306.20
70239-5-02	Door for 622-5-02	306.20
70240-0-02	Door for 627-0-02	303.40
70241-0-02	Door for 631-0-02	336.40
70241-5-02	Door for 631-5-02	336.40
70242-0-02	Door for 636-0-02	362.50
70242-5-02	Door for 636-5-02	362.50
70243-0-02	Door for 638-0-02	404.50
70244-0-02	Door for 648-0-02	399.90
70245-0-02	Door for 650-0-02	436.60
70246-0-02	Door for 660-0-02	461.50
70246-5-02	Door for 660-5-02	461.50
70247-0-02	Door for 662-0-02	486.30
70248	Latch Rods 560/562/660/662	60.80
7638	Door Chain (2) for 524	34.30
7662	Door Chain (2) for 526	36.70
7663	Latch Rod (2) for 524	30.00
7664	Latch Rod (2) for 530	31.40
7665	Latch Rod (2) for 536	31.40
7666	Latch Rod (2) for 548	35.60
7667	Latch Rod (2) for 560	38.70
	UNDERBED DOORS - PREVIOUS 01 STYLE	
7668-3	Door for 524-3-01	231.90
7668-5	Door for 524-5-01	231.90
7669-3	Door for 525-3-01	137.10
7669-5	Door for 525-5-01	137.10
7670-3	Door for 526-3-01	348.20
7670-5	Door for 526-5-01	348.20
7671-3	Door for 530-3-01	259.90
7671-5	Door for 530-5-01	259.90
7672-3	Door for 532-3-01	281.20
7672-5	Door for 532-5-01	281.20
7673-2	Door for 536-2-01 Stainless Steel	325.00
7673-3	Door for 536-3-01	281.20
7673-5	Door for 536-5-01	281.20
7674-3	Door for 538-3-01	313.60
7674-5	Door for 538-5-01	313.60
7675-2	Door for 548-2-01 Stainless Steel	374.90
7675-3	Door for 548-3-01	304.60
7675-5	Door for 548-5-01	304.60
7676-3	Door for 550-3-01	339.90
7676-5	Door for 550-5-01	339.90
7677-3	Door for 560-3-01	341.90
7677-5	Door for 560-5-01	341.90
7678-3	Door for 562-3-01	374.90
7678-5	Door for 562-5-01	374.90
	UNDERBED DOORS - PRE 01 STYLE	
7075-3	Door for 526-3	248.10
7075-5	Door for 526-5	248.10
7076-3	Door for 532-3	283.00
7076-5	Door for 532-5	283.00
7077-3	Door for 538-3	317.70
7077-5	Door for 538-5	317.70
7078-3	Door for 550-3 & 297-3	237.30
7078-5	Door for 550-5	237.30
7079-3	Door for 562-3	375.70
7079-5	Door for 562-5	375.70
7514-3	Door for 524-3	236.20
7514-5	Door for 524-5	236.20
7515-3	Door for 525-3	218.80
7515-5	Door for 525-5	218.80
7516-5	Door for 530-5	261.60
7517-3	Door for 536-3	283.00

Model	DESCRIPTION	Trade
7517-5	Door for 536-5	283.00
7518-3	Door for 548-3	306.20
7518-5	Door for 548-5	306.20
7519-3	Door for 560-3	346.80
7519-5	Door for 560-5	346.80
7524-B	Door for R-524-B	166.80
7530-B	Door for R-530-B	195.40
7541C	Door for 622	134.50
7639C	Door for 622	242.70
7639-5	Door for 622-5	242.70
7640C	Door for 626	226.40
7640-5	Door for 626-5	226.40
7641C	Door for 627	215.70
7641-5	Door for 627-5	215.70
7642C	Door for 631 & 365	191.20
7642-5	Door for 631-5 & 365-5	191.20
7643C	Door for 632	215.00
7643-5	Door for 632-5	215.00
7644C	Door for 636	218.80
7644-5	Door for 636-5	218.80
7645C	Door for 638	204.50
7645-5	Door for 638-5	204.50
7646C	Door for 648	236.10
7646-5	Door for 648-5	236.10
7647C	Door for 650	250.60
7647-5	Door for 650-5	250.60
7648C	Door for 660	262.60
7648-5	Door for 660-5	262.60
7649C	Door for 662	287.10
7649-5	Door for 662-5	287.10
7656-5	Door for 9548-5	337.80
7657-5	Door for 9560-5	397.70
	HI-SIDE DOORS - CURRENT STYLE	
70092-3	Replacement Door 246-3-01, 290-3-01, 296-3-01	334.60
70092-5	Replacement Door 290-5-01	334.60
70093-3	Replacement Door 297-3-01	377.30
70094-0	Replacement Door 372-0-01, 364-0-01	274.60
70094-5	Replacement Door 372-5-01, 364-5-01	274.60
70095-0	Replacement Door 347-0-01, 391-0-01	308.90
70095-5	Replacement Door 347-5-01, 391-5-01	308.90
70096-0	Replacement Door 346-0-01, 390-0-01, 396-0-01	308.90
70096-5	Replacement Door 346-5-01, 390-5-01, 396-5-01	308.90
70097-3	Replacement Door 265-0-01	308.90
70098-3	Replacement Door 247-3-01, 291-3-01	343.00
70099-0	Replacement Door 365-0-01	283.30
70099-5	Replacement Door 365-5-01	283.30
70100-3	Replacement Door 264-3-01, 272-3-01	308.90
70151-3	Replacement Door 246/290-3-02	334.60
70152-3	Replacement Door 247/291-3-02	343.00
70153-3	Replacement Door 264-3-02	308.90
70154-3	Replacement Door 265-3-02	308.90
70155-3	Replacement Door 272-3-02	308.90
70156-3	Replacement Door 296-3-02	334.60
70157-3	Replacement Door 297-3-02	377.30
70158-0	Replacement Door 346/390-0-02	308.90
70158-5	Replacement Door 346/390-5-02	308.90
70159-0	Replacement Door 347/391-0-02	308.90
70159-5	Replacement Door 347/391-5-02	308.90
70160-0	Replacement Door 364-0-02	274.60
70160-5	Replacement Door 364-5-02	274.60
70161-0	Replacement Door 365-0-02	283.30
70161-5	Replacement Door 365-5-02	283.30
70162-0	Replacement Door 372-0-02	274.60

Model	DESCRIPTION	Trade
70162-5	Replacement Door 372-5-02	274.60
70163-0	Replacement Door 396-0-02	308.90
70163-5	Replacement Door 396-5-02	308.90
	HI-SIDE DOORS - PREVIOUS STYLE	
7632	Door for 346, 390, 396	214.60
7632-5	Door for 346-5, 390-5, 396-5	214.60
7633	Door for 347, 391	218.80
7633-5	Door for 347-5, 391-5	218.80
7634	Door for 364	205.70
7634-5	Door for 364-5	205.70
7635	Door for 372	205.70
7635-5	Door for 372-5	216.50
7816-3	Door for 246-3, 290-3, 296-3	217.90
7816-5	Door for 246-5, 290-5, 296-5	217.90
7817-3	Door for 247-3, 291-3	217.90
7818-3	Door for 264-3	169.10
7825-3	Door for 272-3	182.00
7516-3	Door for 265-3	261.60
	PACK RAT® UNIT PARTS	
70133	Handle Kit for PACK RAT® Drawer Units, black	15.00
70134	Non-Skid Wear Strip for PACK RAT® & ITEMIZER® Drawer Units	15.00
7043-3	Clamp Mounting Kit for 301	34.60
7471-3	PACK RAT® Drawer for 305-3	400.20
7474-3	Non-Skid Wear Strip for PACK RAT® & ITEMIZER® Drawer Units	589.00
7476-3	Non-Skid Wear Strip for PACK RAT® & ITEMIZER® Drawer Units	579.20
7482-3	Non-Skid Wear Strip for PACK RAT® & ITEMIZER® Drawer Units	410.50
841	Front drawer roller (6") for 305-3, 335-3	15.00
842	Front drawer roller (8") for 306-3, 336-3	39.20
843	Front drawer roller (10") for 301-3, 303-3, 307-3, 307-3, 308-3, 312-3, 334-3, 337-3, 338-3	39.20
844	Rear drawer bearing for all PACK RAT® Drawer Units	7.70
845	Nut, bolt, washer for 844	7.70
908-1	Latch Assembly for PACK RAT® Drawer Units	41.20
7637-XX	Lock for PACK RAT® Drawer Units (XX=key code)	15.00
	LOCKS & LATCHES	
70109	Latch Rod Kit for 180-X-01	106.30
70116	Latch Kit Rotary 143	99.20
70130	Latch Rods for 264/265/272	56.90
70131	Latch Rods for 246/247	56.90
70167-XXX	D-Handle Lock Kit (XXX=Key Code)	101.30
70168-XXX	D-Handle Lock Cylinder (XXX=Key Code)	28.10
70169	Latch Rods for 246/247/346/347/290/291/390/391-X-02	35.10
70170	Latch Rods for 264/265/364/365-X-02	36.00
70171	Latch Rods for 272/372-X-02	36.00
70172	Latch Rods for 296/297/346-X-02	36.00
70732	Latch Kit for Side/Cross Box	59.90
70740	Latch Rods for 160/162/170/172	64.60
7080	Striker Plate Kit for Hi-Sides and Underbeds	7.90
7081-1PK	Paddle Handle Latch & Lock Kit for Hi-Sides and Underbeds	81.70
710-XX	Underbed Lock Cylinder for D-Handle Lock (XX=key code)	24.00
7153-XX	Lock for Hi-Side and Underbed Boxes (XX=key code)	19.80

Model	DESCRIPTION	Trade
7156	T-Handle Lock Kit for All-Purpose Chests except Jumbo All-Purpose Chests, previous generation	33.70
7291	Cam Rod for Rotary Latch	8.50
7385	Latch Kit Cover for 114	11.10
7684-XX	D-Handle Lock for Steel Underbeds (XX=key code)	98.60
7731	Latch Kit for Saddle Boxes and All-Purpose Chests	62.70
7738	Latch Rod Kit for all versions of 116, 117, 126, 127, 128 Saddle Boxes	64.60
7739	Latch Rod Kit for Saddle Boxes 136-X-01, 137-X-01, 154-X-01, 156-X-01	64.00
7741	Latch Rod Kit for all versions of Pork Chop Boxes 161, 163, 171, 173	64.00
7742	Latch Rod Kit for All-Purpose Chests 644-X-01, 645-X-01	64.00
7743	Latch Rod Kit for All-Purpose Chests 654-X-01, 655-X-01	64.60
7744	Latch Rod Kit for All-Purpose Chests 664-X-01, 665-X-01, 684-X-01, 685-X-01	64.60
7745	Latch Rod Kit for All-Purpose Chests 674-X-01, 675-X-01	64.60
7897	Latch Rod Kit for older Saddle Boxes 136-3, 137, 137-5, 156-3, 156-3, 158-3	28.90
7898	Latch Rod Kit for older Saddle Boxes 154, 154-5, R-154	28.90
7899	Latch Rod Kit for All-Purpose Chests older than current Model-Color-01 Series	25.90
7924	Cam Rod for Latch Assembly	16.70
7951	Latch Rod Kit for Saddle Box 121-X-01	68.70
7953	Latch Rod Kit for Saddle Box 131-X-01	70.50
7976	Latch Rod Kit for 143-X-01	33.80
7978	Paddle Handle Non-Lock for 143-X-01	26.20
	TRUCK LADDER RACK PARTS	
7586-3	Ladder Stop for 1245-3	42.80
7586-5	Ladder Stop for 1245-5	42.80
7605	ATR™ Driver Side Leg 27.5" (1)	219.10
7606	ATR™ Passenger Side Leg 27.5" (1)	219.10
7607	ATR™ Rear Mounting Rail 20" (1)	80.10
7608	ATR™ Cross Member 67" (1)	180.40
7609	ATR™ MT Pad (4) Wedge (2) Kit	32.50
7610	ATR™ Rear Leg 27.5" (1)	129.10
7611	ATR™ Ladder Stop (1)	59.40
7612	ATR™ Front Assembly Hardware Kit	85.20
7615	ATR™ Rear Assembly Hardware Kit	108.20
7616	ATR™ Tool Box Mounting Kit	35.10
7617	ATR™ DS Rear Side Rail Bracket (1)	61.80
7618	ATR™ Front Side Rail Bracket (1)	80.10
7619	ATR™ Side Rail Section (1)	240.20
7620	ATR™ Side Rail Hardware Kit	85.20
7621	ATR™ Rail Mounting Hardware Kit	20.90
7622	ATR™ Triangle Bracket (1)	74.70
7623	ATR™ RED TIPS® Assortment	46.80
7629	ATR™ Anti-Wear Strips (2)	54.40
7636	ATR™ Passenger Side Rear Side Rail Bracket (1)	46.80
	TRUCK LADDER RACK PARTS	
728	Cross Member Hitch Pin for Models 1225, 1245, 1275, 1345, 1375	10.00
778-3	Cross Member for Models 1245 & 1275	40.30
778-5	Cross Member for Models 1245 & 1275	40.30
782-3	Model 1275 Rail Section	110.90
782-5	Model 1275 Rail Section	110.90
793-5	Upright for Model 1475	105.20
946-5	Upright for Model 1450	106.70

Model	DESCRIPTION	Trade
70020	Leg Service Kit for 1275 (2007)	61.80
70020-3	Leg Service Kit for 1275-3 (2007)	61.80
70021	Mounting Kit For 1450/1475	20.70
70021-3	Mounting Kit For 1450-3/1475-3	120.10
7087-3	Cross Member for Models 1345 & 1375	38.20
7087-5	Cross Member for Models 1345 & 1375	38.20
7089-3	Model 1245 Rail Section	97.20
7089-5	Model 1245 Rail Section	97.20
7269-5	Leg/Rail Driver Side Clamp Style for 1280	443.20
7270-5	Leg/Rail Passenger Side Clamp Style for 1280	443.20
7400-3	Socket Kit for Models 1245, 1275, 1345, 1375	74.60
7400-5	Socket Kit for Models 1245, 1275, 1345, 1375	74.60
7520-5	Extension Arm for Model 1450	56.60
7521-3	Upright Mounting Kit for Models 1450 & 1475	64.00
7521-5	Upright Mounting Kit for Models 1450 & 1475	64.00
7522-5	Extension Arm for Model 1475	88.60
7558-3	Leg for Model 1245 & 1275	50.90
7558-5	Leg for Model 1245 & 1275	50.90
7588-3	Front Leg for Models 1345 & 1375	44.40
7588-5	Front Leg for Models 1345 & 1375	44.40
7589-3	Rear Leg Models 1345 & 1375	44.70
7589-5	Rear Leg Models 1345 & 1375	44.70
7590	Rear Cross Member Knob for Model 1280 FAST RACK® System	12.20
7724-5	Mounting Bracket For 1225	85.30
7725-5	Rear Rail Kit for 1225	479.10
7726-5	Leg Rail & Clamp Kit for 1225	159.60
7727-5	Cross Member for Model 1225	117.20
7728-5	Cross Member for Model 1225	159.60
7884	RED TIPS® for WEEKENDER® Racks Models 1450 & 1475	10.70
7890	Rear Bracket Kit for 1450/1475	40.60
	BOLT KITS	
70137	Bolt Kit for current Hi-Sides	32.90
70225	Underbed Striker Bolt Kit	6.50
7145	Bolt Kit for 3100 & 3200	43.80
7146	Bolt Kit for 3300 & 3400	43.80
755	Bolt Kit for 1450 & 1475	35.20
7592	Bolt Kit for 1280	65.90
765	Bolt Kit for 200 & 202	16.70
769	Bolt Kit for 1900 & 9036	16.70
7729-5	Bolt Kit for 1225	85.30
7751	Bolt Kit for 1259 & 1359	24.60
7759	Bolt Kit for 350, 354, 356	72.40
795-3	Bolt Kit for 1245, 1275, 1345, 1375	86.60
795-5	Bolt Kit for 1245, 1275, 1345, 1375	86.60
	MISCELLANEOUS	
611	Accessory Box Hi-Sides "-02"	32.90
888	Black touch-up paint (1/2 ounce brush tip)	13.10
7006	Weather Strip 'D' Type	3.80
7067	Dividers for 611, 612, 613, 614	32.90
729	Weather Strip 7/8 x 3/4	3.80
70103	Weather Strip Kit for Alum. Hi Side	63.50
7038	Red Caps for 1900/1910	8.20
7068	Door Cable 11"	16.70
7070	23-3/8" Door Support Cable (2)	7.70
7082	Short Wire Striker Loop for extreme vibration applications such as off roading	16.40
7085	Shims Wireform Striker for 114	7.00
7143	Cable Mounting Bracket	78.10
7148	Bearing w/Hardware Large	24.20

Model	DESCRIPTION	Trade
7247	Replacement Neck Casting for Transfer Tanks	40.00
7380	Filler Cap with Neck for Transfer Tanks	69.40
7425	Hinge for R-246 & R-247	31.60
7613-3	Bracket Corner for 175	39.20
7683	Caps/Plugs for Underbeds	21.50
7730	Weather Strip Kit (various styles for 1 box)	103.00
7733	Mounting Kit for all Cross & Saddle Boxes	64.60
7737	Level Holder for -01 series Saddle Boxes only	25.90
7746	Nameplate for all current model -01 series truck boxes	51.70
7749	Grommet Kit	18.20
70101	Weather Strip Kit for Hi-Sides & Underbeds	52.30
70102	18" Door Support Cables (2)	39.20
70105	Decals & Bezels for Low Profile	85.80
70135	Left and Right Carborator Clip for Latch Rod	6.80
70136	White touch-up paint (1/2 ounce brush tip)	13.10
70164	Door Cables (13") and Caribiners	15.60
70165	Door Cables (16") and Caribiners	13.60
70166	Door Cables (24") and Caribiners	18.60
70173	Weather Strip Kit for "-02" Hi-Sides/Super Sides	52.30
70736	Mounting Kit for All-Purpose Chest	64.60
70903	Push Button Assembly	10.10
7101-3	Replacement Leg, white, Hi-Sides	28.40
7101-5	Replacement Leg, black, Hi-Sides	28.40
7458-100BG	5/16" Blind Fasteners bulk bag of 100 with installation tool only	133.70
7458-50BG	5/16" Blind Fasteners bulk bag of 50 with installation tool only	84.70
7459-100BG	1/4" Blind Fasteners bulk bag of 100 with installation tool only	84.70
7459-50BG	1/4" Blind Fasteners bulk bag of 50 with installation tool only	42.30
7613-B	Angle Bracket for Side Box	18.30
7734-3	Mounting Kit for Side Boxes	53.60
7734-5	Mounting Kit for Side Boxes	53.60
7735-3	Mounting Kit for Pork Chop Boxes	77.40
7735-5	Mounting Kit for Pork Chop Boxes	77.40
7881	Hardware Cap Kit for 1908	35.90
7896	Retro-Fit Kit Without Lock	76.90
7907	Door Catch Assembly	20.70
7931	Lock/2 Keys/Mounting Nut	25.80
7971	Decal	3.20
7973	Decal	7.10
7977	Mounting Kit for 143-X-01	38.70
7992	Decals for Transfer Tanks	24.60
7998-100BG	1/4" Blind Fasteners bulk bag of 100 with bolts, washers, & tool	127.00
7998-50BG	1/4" Blind Fasteners bulk bag of 50 with bolts, washers, & tool	63.50
999-100BG	5/16" Blind Fasteners bulk bag of 100 with bolts, washers, & tool	200.30
999-50BG	5/16" Blind Fasteners bulk bag of 50 with bolts, washers, & tool	100.20

PRICES ARE US FUNDS

Updated January 8, 2015 (see orange highlighted cells)

Terms and Conditions of Sale are available online.
To place an order, contact Customer Service at:
TOLL FREE: 1-800-456-7865 Fax: 1-800-334-2981
©2013 Knaack LLC, 420 Terra Cotta Ave.,
Crystal Lake, IL 60014
www.weatherguard.com email: **Knaack.OrderEntry@WernerCo.com**

Distributor Price Sheet
UltraMount® 2 FLEET FLEX
Snowplows and Spreaders
2016 In-Season Pricing

August 1, 2016

FLEETFLEX
ELECTRICAL SYSTEM

WESTERN PRODUCTS
P.O. Box 245038
Milwaukee, WI 53224
A DIVISION OF DOUGLAS DYNAMICS, LLC

Western Products
P.O. Box 245038
Milwaukee, WI 53224
A DIVISION OF DOUGLAS DYNAMICS, LLC

Distributor Price Sheet
UltraMount® 2 Snowplows
2016 In-Season Pricing
August 1, 2016

ULTRAMOUNT 2 SYSTEM

Complete plow pricing below includes: Blade Assembly, Big Box Assembly, Control, 3-port Vehicle Module, 3-port Vehicle Specific Harness, & Vehicle Specific Mount.
Adapters are additional (SEE PG 6).

Complete Package Price			
Model	**Size**	**LIST**	
HTS™	7' 6"	$5,715.00	
MIDWEIGHT™	7' 6"	$6,199.00	
MIDWEIGHT Poly	7' 6"	$6,493.00	
PRO PLOW®	7' 6"	$6,567.00	
	8'	$6,700.00	
	8' 6"	$6,837.00	
PRO PLOW Poly	7' 6"	$6,972.00	
	8'	$7,062.00	
PRO PLUS®	8'	$7,079.00	
	8' 6"	$7,223.00	
	9'	$7,409.00	
MVP PLUS™	7' 6"	$7,074.00	
	8' 6"	$7,430.00	
	9' 6"	$7,828.00	
MVP PLUS Poly	7' 6"	$7,310.00	
	8' 6"	$7,689.00	
	9' 6"	$8,102.00	
MVP 3™	7' 6"	$7,443.00	
	8' 6"	$7,807.00	
	9' 6"	$8,215.00	
MVP 3 Poly	8' 6"	$8,072.00	
	9' 6"	$8,497.00	
MVP 3 Stainless Steel	7' 6"	$8,225.00	
	8' 6"	$8,706.00	
	9' 6"	$9,128.00	
PRODIGY™	8' 6"	$8,179.00	
WIDE-OUT™	8' to 10'	$9,027.00	

ULTRAMOUNT® 2 SYSTEM

DISTRIBUTOR PRICE SHEET
ULTRAMOUNT 2
SYSTEM SNOWPLOWS

2016 In-Season Pricing
August 1, 2016

BLADE ASSEMBLIES

	PART #	DESCRIPTION	LIST		EST WT
HTS	69500	7-1/2' HTS™	$ 1,209.00		226 lbs.
MW	74340	7-1/2' MIDWEIGHT™	$ 1,591.00		331 lbs.
	74330	7-1/2' MIDWEIGHT Poly	$ 1,885.00		313 lbs.
PRO-PLOW	72381	7-1/2' PRO PLOW® Series 2	$ 1,959.00		471 lbs.
	72390	8' PRO PLOW Series 2	$ 2,092.00		482 lbs.
	72308	8-1/2' PRO PLOW Series 2	$ 2,229.00		493 lbs.
PRO POLY	72400	7-1/2' PRO PLOW Series 2 Poly (deflector included)	$ 2,364.00		489 lbs.
	72450	8' PRO PLOW Series 2 Poly (deflector included)	$ 2,454.00		499 lbs.
PRO PLUS	76980	8' PRO PLUS®	$ 2,205.00		503 lbs.
	76974	8-1/2' PRO PLUS	$ 2,349.00		514 lbs.
	76901	9' PRO PLUS	$ 2,535.00		525 lbs.
MVP PLUS	44475-1	7-1/2' MVP PLUS™ Steel Blade	$ 1,891.00		451 lbs.
	44485-1	8-1/2' MVP PLUS Steel Blade	$ 2,247.00		503 lbs.
	44495-1	9-1/2' MVP PLUS Steel Blade	$ 2,645.00		630 lbs.
MVP PLUS	44575-1	7-1/2' MVP PLUS Poly Blade	$ 2,127.00		423 lbs.
	44585-1	8-1/2' MVP PLUS Poly Blade	$ 2,506.00		470 lbs.
	44595-1	9-1/2' MVP PLUS Poly Blade	$ 2,919.00		587 lbs.
MVP 3	74475	7-1/2' MVP 3™ Steel Blade	$ 2,158.00		550 lbs.
	74485	8-1/2' MVP 3 Steel Blade	$ 2,522.00		669 lbs.
	74495	9-1/2' MVP 3 Steel Blade	$ 2,930.00		728 lbs.
MVP 3	74585	8-1/2' MVP 3 Poly Blade	$ 2,787.00		624 lbs.
	74595	9-1/2' MVP 3 Poly Blade	$ 3,212.00		676 lbs.
MVP3	74675	7-1/2' MVP 3 SS Blade	$ 2,940.00		550 lbs.
	74685	8-1/2' MVP 3 SS Blade	$ 3,421.00		669 lbs.
	74695	9-1/2' MVP 3 SS Blade	$ 3,843.00		728 lbs.
PDGY	57700	PRODIGY™	$ 3,147.00		540 lbs.
WO	52810	WIDE-OUT™	$ 3,800.00		670 lbs.

PLOW BIG BOXES

PART #	DESCRIPTION	LIST		EST WT
69525	HTS Big Box	$ 3,211.00		305 lbs.
75200	MIDWEIGHT / PRO PLOW UltraMount 2 Big Box	$ 3,313.00		426 lbs.
75700	PRO PLUS UltraMount 2 Big Box	$ 3,579.00		440 lbs.
75300	MVP PLUS UltraMount 2 Big Box	$ 3,888.00		520 lbs.
74300	MVP 3 UltraMount 2 Big Box	$ 3,990.00		592 lbs.
74400	MVP 3 Silver UltraMount 2 Big Box	$ 3,990.00		592 lbs.
57800	PRODIGY UltraMount 2 Big Box	$ 3,737.00		520 lbs.
52300	WIDE-OUT UltraMount 2 Big Box	$ 3,932.00		485 lbs.

PLOW BIG BOXES
CENTRAL HYDRAULICS

PART #	DESCRIPTION	LIST		EST WT
75210	MIDWEIGHT / PRO PLOW UltraMount 2 Big Box CH	$ 1,791.00		374 lbs.
75710	PRO PLUS UltraMount 2 Big Box CH	$ 1,897.00		373 lbs.
75310	MVP PLUS UltraMount 2 Big Box CH	$ 2,322.00		468 lbs.
74310	MVP 3 UltraMount 2 Big Box CH	$ 2,384.00		537 lbs.
57810	PRODIGY UltraMount 2 Big Box CH	$ 2,200.00		510 lbs.
52310	WIDE-OUT UltraMount 2 Big Box CH	$ 2,349.00		436 lbs.

Western Products
P.O. Box 245038
Milwaukee, WI 53224
A DIVISION OF DOUGLAS DYNAMICS, LLC

Distributor Price Sheet
UltraMount® 2 Snowplows
2016 In-Season Pricing
August 1, 2016

ULTRAMOUNT 2
!!CENTRAL HYDRAULICS!!

Complete plow pricing below includes: Blade Assembly, CH Big Box Assembly, 3-port Vehicle Module, 3-port Vehicle Specific Harness, Vehicle Specific Mount & 29047 Adapter.
Other Adapters are additional (SEE PG 6).

Model	Size	LIST	
HTS™	7' 6"	NA	
MIDWEIGHT™	7' 6"	$4,297.00	
MIDWEIGHT Poly	7' 6"	$4,591.00	
PRO PLOW® Series 2	7' 6"	$4,665.00	
	8'	$4,798.00	
	8' 6"	$4,935.00	
PRO PLOW Series 2 Poly	7' 6"	$5,070.00	
	8'	$5,160.00	
PRO PLUS®	8'	$5,017.00	
	8' 6"	$5,161.00	
	9'	$5,347.00	
MVP PLUS™	7' 6"	$5,128.00	
	8' 6"	$5,484.00	
	9' 6"	$5,882.00	
MVP PLUS Poly	7' 6"	$5,364.00	
	8' 6"	$5,743.00	
	9' 6"	$6,156.00	
MVP 3™	7' 6"	$5,457.00	
	8' 6"	$5,821.00	
	9' 6"	$6,229.00	
MVP 3 Poly	8' 6"	$6,086.00	
	9' 6"	$6,511.00	
MVP 3 Stainless Steel	7' 6"	$6,239.00	
	8' 6"	$6,720.00	
	9' 6"	$7,142.00	
PRODIGY™	8' 6"	$6,262.00	
WIDE-OUT™	8' to 10'	$7,064.00	

ULTRAMOUNT® 2 SYSTEM

DISTRIBUTOR PRICE SHEET
ULTRAMOUNT 2
SYSTEM SNOWPLOWS

2016 In-Season Pricing
August 1, 2016

MOUNTS

	PART #	DESCRIPTION	LIST		EST WT
CHEVY-GM	31599-1	31599 Chevy-GMC Mount	$ 533.00		46 lbs.
	33559	33559 Chevy-GMC Mount	$ 533.00		133 lbs.
	63900	1519 Chevy-GMC Mount	$ 533.00		92 lbs.
	64110	3539 Chevy-GMC Mount	$ 533.00		123 lbs.
	67865	1589 Chevy-GMC Mount	$ 533.00		48 lbs.
	67960-1	3519 Chevy-GMC Mount	$ 533.00		50 lbs.
	67981-2	3529 Chevy-GMC Mount	$ 533.00		58 lbs.
	69981	69981 Chevy-GMC Mount	$ 533.00		55 lbs.
FORD	1369	1369 Ford Mount	$ 533.00		80 lbs.
	1379	1379 Ford Mount	$ 533.00		83 lbs.
	31269-1	31269 Ford Mount	$ 533.00		75 lbs.
	3249	3249 Ford Mount	$ 533.00		75 lbs.
	33259	33259 Ford Mount	$ 533.00		76 lbs.
	38600	38600 Ford Mount	$ 533.00		32 lbs.
	64500	3239 Ford Mount	$ 533.00		38 lbs.
	67810	1229 Ford Mount	$ 533.00		57 lbs.
	67982	3219 Ford Mount	$ 533.00		85 lbs.
	63710-1	1349 Ford Mount	$ 533.00		103 lbs.
	68600	68600 Ford Mount	$ 533.00		30 lbs.
DODGE	3919	3919 Dodge Mount	$ 533.00		65 lbs.
	33884	33884 Dodge Mount	$ 533.00		48 lbs.
	33886-1	33886 Dodge Mount	$ 533.00		48 lbs.
	33929	33929 Dodge Mount	$ 533.00		39 lbs.
	33940-1	33939 Dodge Mount	$ 533.00		50 lbs.
	33949	33949 Dodge Mount	$ 533.00		40 lbs.
	30999	30999 Dodge Mount	$ 533.00		40 lbs.
	63760	959 Dodge Mount	$ 533.00		45 lbs.
	67980	989 Dodge Mount	$ 533.00		58 lbs.
	63883-2	969 Dodge Mount	$ 533.00		52 lbs.
NIS	35066-1	35066 Nissan Mount	$ 533.00		55 lbs.
TOY	31139	31139 Toyota Mount	$ 533.00		38 lbs.
JEEP	33220	33220 Jeep Mount	$ 533.00		40 lbs.
MIT	33109	33109 Mitsubishi Mount	$ 533.00		110 lbs.
	33209	33209 Mitsubishi Mount	$ 533.00		130 lbs.
INT	35109	35109 TerraStar Mount (2x2)	$ 533.00		121 lbs.
	35110	35110 TerraStar Mount (4x4)	$ 533.00		121 lbs.
ISZ	33212	Isuzu Mount	$ 533.00		97 lbs.

ULTRAMOUNT® 2 SYSTEM

DISTRIBUTOR PRICE SHEET
ULTRAMOUNT 2
SYSTEM SNOWPLOWS

2016 In-Season Pricing
August 1, 2016

ULTRAMOUNT 2 CONTROL CHOICES

PART #	DESCRIPTION	LIST		EST WT
96800	Straight Blade Joystick Control	$ 402.00		1 lb.
96900	Straight Blade CabCommand Hand Held	$ 402.00		1 lb.
96500	Multi-Position Plow CabCommand Hand Held	$ 402.00		1 lb.
96400	Multi-Position Plow Joystick	$ 402.00		1 lb.

3-PORT ISOLATION MODULE HARNESS KITS

PART #	DESCRIPTION	LIST		EST WT
29048	HB-3 / HB-4 - GMT-800 HB-3 / HB-4 - Classic Style GM	$ 226.00		4 lbs.
29049	H-13	$ 226.00		4 lbs.
29050	HB-5 / HB-1 HB-5 / HB-1 Dodge Sport Package Mitsu FG	$ 226.00		4 lbs.
29051	2B / 2D / HB-2	$ 226.00		4 lbs.
29053	GM 4500/5500 2B / 2D - 1A / 2A	$ 226.00		5 lbs.
29054	Plug In 7-Pin Connector - Topkick / Kodiak	$ 226.00		5 lbs.
52101	Chevy/GMC 2500/3500 HB-3/HB-11/HID	$ 226.00		5 lbs.
69804	HIR2/HB-3	$ 226.00		5 lbs.
69805	HID Ford	$ 226.00		5 lbs.
69818	Chevy/GMC 1500 8-pin	$ 226.00		5 lbs.
69889	F150 HB-3/H-11	$ 226.00		5 lbs.
69892	7 Wire, RAM HD with Access Wires	$ 226.00		5 lbs.
72101	Chevy/GMC 1500 HID/LED	$ 226.00		5 lbs.
29400-5	HB-3 & H-11 (GM & Toyota)	$ 226.00		6 lbs.

3-PORT VEHICLE MODULES

PART #	DESCRIPTION	LIST		EST WT
29070-1	3-Port Module - DRL & non-DRL	$ 134.00		1 lb.
29760-2	3-Port Module - Soft Start	$ 134.00		1 lb.

HEADLAMP KIT

PART #	DESCRIPTION	LIST		EST WT
28800-1	NIGHTHAWK™ Headlamp Kit (11 pin)	$ 305.00		15 lbs.

ADAPTER KITS

PART #	DESCRIPTION	LIST		EST WT
28027-2	Adapter Kit - Module to Harness	$ 43.00		1 lb.
29033	Adapter Kit - 2E to H13	$ 43.00		1 lb.
B62225-1	Adapter Kit - H13 to LF/UF	$ 43.00		1 lb.
29234	Adapter Kit - Harness to Lights 2B / 2D	$ 43.00		1 lb.
29235	Adapter Kit - Harness to Lights HB-5	$ 43.00		1 lb.
26641-1	HB-5 to 1A / 2A	$ 43.00		2 lbs.
28860-1	Adapter Kit - Harness to Lights 6-Pin	$ 43.00		1 lb.
27968-1	Adapter Kit - Harness to Lights 2B to 2E	$ 43.00		1 lb.
29056-1	Adapter Kit - Lights to Relay	$ 43.00		1 lb.
48236	Adapter Kit - International Terrastar	$ 43.00		1 lb.
69826-1	Adapter Kit - HB-2/H-11 DRL	$ 43.00		1 lb.
69928	Adapter Kit - Harness to Lights 8-pin	$ 43.00		1 lb.
69859	Adapter Kit - F150 LED	$ 43.00		1 lb.
72100	HB-3 to H9 Adapter Harness	$ 43.00		1 lb.
29047	Adapter Kit - 3 Port to 22415/18	$ 22.00		1 lb.

Western Products
P.O. Box 245038
Milwaukee, WI 53224
A DIVISION OF DOUGLAS DYNAMICS, LLC

SKID STEER SNOWPLOWS

2016 In-Season Pricing
August 1, 2016

COMPLETE PACKAGE PRICING

Model	Description	LIST		EST WT
PRO PLUS	8' PRO PLUS®/SS ATTACHMENT	$ 3,756.00		756 lbs.
PRO PLUS	8-1/2' PRO PLUS/SS ATTACHMENT	$ 3,900.00		777 lbs.
PRO PLUS	9' PRO PLUS/SS ATTACHMENT	$ 4,086.00		798 lbs.
PDGY	PRODIGY™/SS ATTACHMENT	$ 4,882.00		911 lbs.

BLADE ASSEMBLIES

	PART #	DESCRIPTION	LIST		EST WT
PRO PLUS	76980	8' PRO PLUS	$ 2,205.00		503 lbs.
PRO PLUS	76974	8-1/2' PRO PLUS	$ 2,349.00		514 lbs.
PRO PLUS	76901	9' PRO PLUS	$ 2,535.00		525 lbs.
PDGY	57700	PRODIGY	$ 3,147.00		540 lbs.

SKID STEER BIG BOXES

PART #	DESCRIPTION	LIST		EST WT
75720	PRO PLUS SS Big Box	$ 1,551.00		368 lbs.
57820	PRODIGY SS Big Box	$ 1,735.00		358 lbs.

SKID STEER ACCESSORIES

	PART #	DESCRIPTION	LIST		EST WT
	57893	Connect Under Pressure Quick Couplers	$ 285.00		10 lbs.
PRO PLUS	66892	8' BACK DRAG EDGE	$ 118.00		37 lbs.
PRO PLUS	66999	8.5' BACK DRAG EDGE	$ 123.00		40 lbs.
PRO PLUS	66991	9' BACK DRAG EDGE	$ 127.81		43 lbs.
PRO PLUS	63980	8' 1/2" STEEL CUTTING EDGE	$ 193.49		80 lbs.
PRO PLUS	63985	8.5' 1/2" STEEL CUTTING EDGE	$ 204.93		84 lbs.
PRO PLUS	63990	9' 1/2" STEEL CUTTING EDGE	$ 217.42		88 lbs.
PRO PLUS	43885	(NEW) CURB GUARD, PAIR	$ 238.00		5 lbs.
PRO PLUS	63670	POLY DEFLECTOR	$ 166.00		19 lbs.
PRO PLUS	62530-1	8' RUBBER DEFLECTOR	$ 203.00		21 lbs.
PRO PLUS	62220-1	8.5', 9' RUBBER DEFLECTOR	$ 213.00		26 lbs.
PRO PLUS	56990	8', 8.5', 9' EXTENDED (18") RUBBER DEFLECTOR	$ 401.00		35 lbs.
PRO PLUS	64410	WING EXTENSION KIT	$ 743.00		96 lbs.
PDGY	42384	DEFLECTOR	$ 281.00		53 lbs.
PDGY	42437	BACK DRAG EDGE	$ 133.00		35 lbs.
PDGY	49853	SHOE ASSY KIT - PRODIGY (PAIR)	$ 111.45		46 lbs.
PDGY	63979	SHOCK ABSORBER KIT	$ 119.18		3 lbs.

Western Products
P.O. Box 245038
Milwaukee, WI 53224
A DIVISION OF DOUGLAS DYNAMICS, LLC

IMPACT™ UTV SNOWPLOW

2016 In-Season Pricing
August 1, 2016

COMPLETE PACKAGE PRICING

Description	LIST				EST WT
6' IMPACT UTV V-PLOW	$ 4,256.00				354 lbs.

BLADE ASSEMBLY

PART #	DESCRIPTION	LIST				EST WT
74360	BLADE ASSY - 6' IMPACT UTV	$ 1,200.00				186 lbs.

UTV BIG BOX

PART #	DESCRIPTION	LIST				EST WT
77865	UTV V-PLOW BIG BOX	$ 2,325.00				168 lbs.

UTV MOUNTS

PART #	DESCRIPTION	LIST				EST WT
35133	MOUNT KIT KUBOTA RTV	$ 325.00				18 lbs.
35134	MOUNT KIT GATOR	$ 325.00				36 lbs.
35136	MOUNT KIT MULE 4010	$ 325.00				35 lbs.
35135	MOUNT KIT POLARIS RANGER/GRAVELY	$ 325.00				34 lbs.
35140	MOUNT KIT MULE 3010	$ 325.00				34 lbs.
35138	MOUNT KIT VIKING	$ 325.00				48 lbs.
35132	MOUNT KIT RHINO	$ 325.00				48 lbs.

NOTE: UTV Mount Kits include electrical harnesses for the UTV as part of the kit

UTV CONTROLS

PART #	DESCRIPTION	LIST				EST WT
85200	PLOW HANDHELD CONTROL WP, UTV	$ 406.00				1 lbs.
85250	PLOW JOYSTICK CONTROL WP, UTV	$ 406.00				1 lbs.

UTV ACCESSORIES

PART #	DESCRIPTION	LIST			EST WT
52655	Deflectors	$ 211.00			54 lbs.
52657	Wings	$ 573.00			15 lbs.
52656	Shoes	$ 149.00			10 lbs.

Western Products
P.O. Box 245038
Milwaukee, WI 53224
A DIVISION OF DOUGLAS DYNAMICS, LLC

2016 In-Season Pricing

August 1, 2016

By Complete Plow			
PART #	**DESCRIPTION**	**LIST**	
6' 8" Suburbanite™ - Hand Held or Joystick Control		$ 5,130.00	
7' 4" Suburbanite - Hand Held or Joystick Control		$ 5,276.00	

Complete plow pricing includes: blade assy, plow gear kit, hydraulics, control, headlamps, vehicle mount, 3-port module, and harness kit.

By Component			
PART #	**DESCRIPTION**	**LIST**	
27546	6' 8" Suburbanite	$ 1,036.00	
27548	7' 4" Suburbanite	$ 1,182.00	
27550	Plow Gear Kit	$ 1,182.00	
27516-2	FloStat® Hydraulics w/ 7" Rams	$ 1,619.00	
56369	Joystick Control	$ 329.00	
56462	CabCommand Hand Held Control	$ 329.00	
64100	Headlamp Kit 11-pin, IM	$ 289.00	
Mounts			
1203	Ford Mount	$ 315.00	
1213-1	Ford Mount	$ 315.00	
1223	Ford Mount	$ 315.00	
1233	Ford Mount	$ 315.00	
31243	Ford Mount	$ 315.00	
31253	Ford Mount	$ 315.00	
31263	Ford Mount	$ 315.00	
31273	Ford Mount	$ 315.00	
1503	Chevy-GMC Mount	$ 315.00	
1523	Chevy-GMC Mount	$ 315.00	
1533-1	Chevy-GMC Mount	$ 315.00	
31543-2	Chevy-GMC Mount	$ 315.00	
31553-1	Chevy-GMC Mount	$ 315.00	
31563	Chevy-GMC Mount	$ 315.00	
33903	Dodge Mount	$ 315.00	
33913	Dodge Mount	$ 315.00	
33923	Dodge Mount	$ 315.00	
2303	Toyota Mount	$ 315.00	
2313	Toyota Mount	$ 315.00	
32323-1	Toyota Mount	$ 315.00	
32333	Toyota Mount	$ 315.00	
31303-1	Nissan Mount	$ 315.00	
31313	Nissan mount	$ 315.00	
3713-2	Jeep Mount	$ 315.00	
3723	Jeep Mount	$ 315.00	
42021	Jeep Mount	$ 315.00	
42113-1	Jeep Mount	$ 315.00	
3-port Harnesses & Adapters			
29048	HB-3 / HB-4	$ 226.00	
29049	H-13	$ 226.00	
29050	HB-5 / HB-1	$ 226.00	
29051	2B / 2D / HB-2	$ 226.00	
29052	HB-3 / HB-4	$ 226.00	
29400-5	HB-3 & H-11 (GM & Toyota)	$ 226.00	
69889	Halogen Bulb Plug In Harness Kit	$ 226.00	
69818	HB-3/H-11/HIR-2 Plug In Harness Kit	$ 226.00	
52101	Chevy/GMC 2500/3500 HB-3/HB-11/HID	$ 226.00	
69804	HIR2/HB-3	$ 226.00	
69805	HID Ford	$ 226.00	
72101	Chevy/GMC 1500 HID/LED	$ 226.00	
28027-2	Adapter Kit Module to Harness	$ 43.00	
69859	Adapter LED	$ 43.00	
72100	HB-3 to H9 Adapter Harness	$ 43.00	
76048	6 pin Adapter Kit	$ 43.00	
27968-1	Adapter Kit 2B to 2E	$ 43.00	
3-port DRL/non-DRL Module			
29070-1	3-Port Module - DRL & non-DRL	$ 134.00	

Distributor Price Sheet

UniMount® System Snowplows

2016 In-Season Pricing - August 1, 2016

COMPLETE PACKAGE PRICE

Model	DESCRIPTION	LIST		EST WT
Heavyweight	10' Heavyweight w/ Universal Mount	$ 8,446.00		N/A

Complete plow pricing includes: blade assembly, attachment assembly, mount, control, 3-port module, vehicle harness kit, NIGHTHAWK™ headlamps & NIGHTHAWK adapter bracket.
** The 9' Heavyweight model was discontinued following the 2011 Pre-Season Ordering period.

BLADES

PART #	DESCRIPTION	LIST		EST WT
62302	10' Heavyweight	$ 2,284.00		526 lbs.

ATTACHMENT ASSEMBLIES

PART #	DESCRIPTION	LIST		EST WT
62298-1	A-frame & Lift - Heavyweight	$ 1,109.00		269 lbs.
62299-1	Quadrant - Heavyweight	$ 1,109.00		253 lbs.

MOUNT

PART #	DESCRIPTION	LIST		EST WT
62275	2955 Universal Mount - HW	$ 1,015.00		266 lbs.

ISOLATION MODULE READY HYDRAULICS

PART #	DESCRIPTION	LIST		EST WT
64400-1	Heavyweight (2 x 16" rams)	$ 1,868.00		113 lbs.

CONTROL CHOICES

PART #	DESCRIPTION	LIST		EST WT
56369	Joystick Control	$ 329.00		1 lb.
56462	Straight Blade CabCommand Hand Held	$ 329.00		1 lb.

3-PORT ISOLATION MODULE

PART #	DESCRIPTION	LIST		EST WT
29070-1	3-Port Module - DRL & non-DRL	$ 134.00		1 lb.

3-PORT ISOLATION MODULE HARNESSES

PART #	DESCRIPTION	LIST		EST WT
29050	HB-5 / HB-1 / Mitsu FG	$ 226.00		4 lbs.
29051	2B / 2D / HB-2	$ 226.00		4 lbs.
29053	GM 4500/5500 2B / 2D - 1A / 2A	$ 226.00		5 lbs.
29054	Plug In 7-Pin Connector - Topkick / Kodiak	$ 226.00		6 lbs.

ISOLATION MODULE HEADLAMP KIT

PART #	DESCRIPTION	LIST		EST WT
28800-1	NIGHTHAWK Headlamp Kit (11 pin)	$ 305.00		15 lbs.
28340	Adapter Bracket **(REQUIRED)**	$ 67.00		5 lbs.

ADAPTER KIT

PART #	DESCRIPTION	LIST		EST WT
26641-1	Plug-In Adapter Kit - HB-5 to 1A /2A	$ 43.00		2 lbs.
28860-1	Plug-In Adapter Kit - HB-5 to HB-2	$ 43.00		1 lb.
29234	Adapter Kit - Harness to Lights 2B / 2D	$ 43.00		1 lb.
29235	Adapter Kit - Harness to Lights HB-5	$ 43.00		1 lb.

Distributor Price Sheet

UniMount® System Snowplows

2016 In-Season Pricing - August 1, 2016

COMPLETE !!CENTRAL HYDRAULICS!! PACKAGE PRICE				
Model	**DESCRIPTION**	**LIST**		**EST WT**
Heavyweight	10' Heavyweight w/ Universal Mount	$ 7,000.08		NA

Complete plow pricing includes: blade assembly, attachment assembly, mount, 3-port module, vehicle harness kit, NIGHTHAWK™ headlamps, NIGHTHAWK adapter bracket, Vehicle Control

BLADES				
PART #	**DESCRIPTION**	**LIST**		**EST WT**
62302	10' Heavyweight	$ 2,284.00		526 lbs.

ATTACHMENT ASSEMBLIES				
PART #	**DESCRIPTION**	**LIST**		**EST WT**
62298-1	A-frame & Lift - Heavyweight	$ 1,109.00		269 lbs.
62299-1	Quadrant - Heavyweight	$ 1,109.00		253 lbs.

MOUNT				
PART #	**DESCRIPTION**	**LIST**		**EST WT**
62275	2955 Universal Mount - HW	$ 1,015.00		266 lbs.

CYLINDERS				
PART #	**DESCRIPTION**	**LIST**		**EST WT**
25878K	Angle Cylinders (2 required)	$ 210.36		29 lbs.
66650	Lift Cylinder 1-1/2" x 6"	$ 88.32		11 lbs.
25210	Optional 2" Lift Cyl. (req. 49007 $109.14 list)	$ 269.65		17 lbs.

3-PORT ISOLATION MODULE				
PART #	**DESCRIPTION**	**LIST**		**EST WT**
29070-1	3-Port Module - DRL & non-DRL	$ 134.00		1 lb.

3-PORT ISOLATION MODULE HARNESSES				
PART #	**DESCRIPTION**	**LIST**		**EST WT**
29050	HB-5 / HB-1 / Mitsu FG	$ 226.00		4 lbs.
29051	2B / 2D / HB-2	$ 226.00		4 lbs.
29053	GM 4500/5500 2B / 2D - 1A / 2A	$ 226.00		5 lbs.
29054	Plug In 7-Pin Connector - Topkick / Kodiak	$ 226.00		6 lbs.

ISOLATION MODULE HEADLAMP KIT				
PART #	**DESCRIPTION**	**LIST**		**EST WT**
28800-1	NIGHTHAWK Headlamp Kit (11 pin)	$ 305.00		15 lbs.
28340	Adapter Bracket **(REQUIRED)**	$ 67.00		5 lbs.

VEHICLE CONTROL HARNESS KIT FOR CENTRAL HYD.				
PART #	**DESCRIPTION**	**LIST**		**EST WT**
26498	Vehicle Control Harness Kit	$ 220.04		2 lbs.

ADAPTER KIT				
PART #	**DESCRIPTION**	**LIST**		**EST WT**
26641-1	Plug-In Adapter Kit - HB-5 to 1A /2A	$ 43.00		2 lbs.
28860-1	Plug-In Adapter Kit - HB-5 to HB-2	$ 43.00		1 lb.
29234	Adapter Kit - Harness to Lights 2B / 2D	$ 43.00		1 lb.
29235	Adapter Kit - Harness to Lights HB-5	$ 43.00		1 lb.
29047	Adapter Kit - 3 Port to 22415/18	$ 22.00		1 lb.

Western Products
7777 NORTH 73RD STREET
P.O. BOX 245038
MILWAUKEE, WI 53224

A DIVISION OF DOUGLAS DYNAMICS, LLC

Distributor Price Sheet

PLOW ACCESSORIES

2016 In-Season Pricing
August 1, 2016

Part #	Description	LIST	
	STEEL CUTTING EDGES		
28594	7-1/2' X 3/8" X 6" - HTS™ (NOTE: 3/8" option accessory for HTS)	$ 169.56	
49346	7-1/2' X 1/2" X 6" PRO-PLOW®	$ 164.00	
64775	7-1/2' X 1/2" X 6" HTS & MIDWEIGHT™	$ 188.29	
49347	8' X 1/2" X 6" PRO	$ 179.00	
49348	8-1/2' X 1/2" X 6" PRO	$ 215.00	
49349	9' X 1/2" X 6" PRO	$ 226.00	
49350	7-1/2' X 1/2" X 6" PRO POLY	$ 192.00	
57865	WIDE-OUT™ Wing Steel Cutting Edge (NOTE: Steel is accy only, Poly standard) *NEW*	$ 205.00	PAIR
49351	8' X 1/2" X 6" PRO POLY	$ 197.00	
28407	8-1/2' MVP® (DS or PS)	$ 198.00	
28409	8-1/2' MVP cutting edge kit with center flap	$ 420.00	
44284-2	7-1/2' MVP PLUS™ or MVP 3™ Kit (1/2")	$ 396.00	PAIR
44285-2	8-1/2' MVP PLUS or MVP 3 Kit (1/2")	$ 444.00	PAIR
	BACK DRAG EDGES		
64758	7-1/2' Steel (HTS, MIDWEIGHT, PRO, PRO PLUS®) & Poly (MIDWEIGHT, PRO)	$ 112.48	
66892	8' Steel (PRO, PRO PLUS) & Poly Blades (PRO)	$ 118.00	
66999	8-1/2' Steel Blades - PRO, PRO PLUS	$ 123.00	
66991	9' Steel Blades - PRO, PRO PLUS	$ 127.81	
44281-3	7-1/2' MVP PLUS and MVP 3 Steel & Poly Kit	$ 230.00	PAIR
44282-3	8-1/2' MVP PLUS and MVP 3 Steel & Poly Kit	$ 283.00	PAIR
44283-3	9-1/2' MVP PLUS and MVP 3 Steel & Poly Kit	$ 316.00	PAIR
52278	7-1/2' WIDE-OUT	$ 170.00	
42437	PRODIGY™	$ 133.00	
64183	Bolt Kit PRO-PLOW, back drag edge	$ 22.64	
29351	Bolt Kit PRO PLUS, back drag edge	$ 25.28	
	RUBBER CUTTING EDGES		
60825	1.0" Rubber cutting edge, 7-1/2' (fits 6-1/2', 7', 7-1/2' steel blades)	$ 402.00	
62556	1.0" Rubber cutting edge, 9' (fits 8', 8-1/2', 9' Pro steel blades)	$ 416.00	
60831	1.5" Rubber cutting edge, 10' (fits 9', 10' HW blades)	$ 728.00	
	DEFLECTORS		
62123-1	Deflector (Rubber) 7-1/2'	$ 169.00	
62530-1	Deflector (Rubber) 8'	$ 203.00	
62220-1	Deflector (Rubber) 9'	$ 213.00	
56990	Pro Plus Deflector 18" (Rubber) 8', 8.5', 9'	$ 401.00	
62124-1	Deflector (Rubber) 10'	$ 267.00	
63700	7-1/2' Heavy Duty Deflector Kit	$ 152.00	
63670	9' Heavy Duty Deflector Kit	$ 166.00	
44280	MVP PLUS Deflector Kit (fits 7-1/2', 8-1/2' & 9-1/2')	$ 281.00	
41810	MVP 3 Standard (10") Deflector Kit (fits 7-1/2', 8-1/2' & 9-1/2')	$ 283.00	
41811	MVP 3 Extended (18") Deflector Kit (fits 7-1/2', 8-1/2' & 9-1/2')	$ 411.00	
42384	PRODIGY Deflector Kit	$ 281.00	
52280	WIDE-OUT Deflector Kit	$ 324.00	

• All deflectors include retaining bars, fasteners, and two curl braces per deflector (PRO-PLOW).

	BLADE GUIDES		
59700	WESTERN® Blade Guide-pair w/flag (includes fasteners) *Standard on PRO-PLOW and HTS*	$ 45.00	
62265	Cable Blade Guide-pair (includes fasteners) *Standard on MIDWEIGHT*	$ 22.00	
62595	24" Commercial Blade Guide-pair (includes fasteners) *Standard on PRO PLUS, MVP, MVP PLUS and WIDE-OUT*	$ 33.00	
62590	36" Commercial Blade Guide-pair (includes fasteners) *Standard on Heavyweight*	$ 48.00	
	FLUID & GREASE		
49311	WESTERN High Performance Hydraulic Fluid-Quarts (multiples of 12)	$ 12.00	EACH
49326	WESTERN 2 oz. Tube Dielectric Grease (multiples of 12)	$ 10.00	EACH
49330	WESTERN High Performance Hydraulic Fluid-Gallons (multiples of 6)	$ 31.00	EACH
63655	55 Gallon Drum WESTERN High Performance Hydraulic Fluid	$ 1,133.00	
	PAINT		
49135	Paint, red - quart can (order in multiples of 6)	$ 58.83	EACH
49293	Paint, black satin - quart can (order in multiples of 6)	$ 58.83	EACH
49294	Paint, black satin - aerosol (order in multiples of 12)	$ 14.70	EACH
59515	Paint, red - aerosol (order in multiples of 12)	$ 19.00	EACH
74413	Paint, silver - aerosol (order in multiples of 12)	$ 19.00	EACH
49418	Primer - aerosol (order in multiples of 12)	$ 19.00	EACH
49419	Primer - quart can (order in multiples of 6)	$ 65.00	EACH

Western Products
7777 NORTH 73RD STREET
P.O. BOX 245038
MILWAUKEE, WI 53224

A DIVISION OF DOUGLAS DYNAMICS, LLC

Distributor Price Sheet

PLOW ACCESSORIES

2016 In-Season Pricing
August 1, 2016

Part #	Description	LIST	
	WING KITS		
64410	PRO PLUS® Blade Wing Kit	$ 743.00	
44510-1	MVP PLUS™ Blade Wing Kit (8-1/2' and 9-1/2' models only)	$ 743.00	
43510	MVP 3™ Blade Wing Kit (8-1/2' and 9-1/2' models only)	$ 764.00	
	CURB GUARDS		
44403	Curb Guard, Single (1/2" fasteners w/extension)	$ 101.23	
	• 7-1/2' Std (Steel & Poly), 7-1/2' PRO (Steel & Poly), 8- PRO (Steel & POLY), 8-1/2' PRO, and 8-1/2' MVP		
43885	Curb Guard, Pair (5/8" fasteners w/o extension)	$ 238.00	
	• 7-1/2' HTS™, 7-1/2' MIDWEIGHT™ (Steel & Poly), ALL PRO PLUS blades, ALL MVP PLUS and MVP 3 blades, & Heavyweight		
	BLADE SHOE ASSEMBLY KITS		
27710	Shoe Assy Kit - Suburbanite™ (pair)	$ 150.00	
69570	Shoe Assy Kit - HTS (pair)	$ 121.00	
64392	Shoe Assy Kit - MIDWEIGHT (pair)	$ 120.00	
49853	Shoe Assy Kit - PRODIGY™ (pair)	$ 111.45	
44277-1	Shoe Assy Kit - MVP PLUS & WIDE-OUT (pair)	$ 168.00	
43088	Shoe Assy Kit - MVP 3 (pair)	$ 203.00	
	EMERGENCY PARTS KITS		
99110	UniMount® Emergency Parts Kit	$ 165.00	
99105	UltraMount® Non-FLEET FLEX Emergency Parts Kit	$ 112.00	
99100	UltraMount and UltraMount® 2 FLEET FLEX Emergency Parts Kit	$ 129.00	
	CONTROL ACCESSORIES		
49305K	Pro-Grip - Cab control mounting kit	$ 13.00	
61845	Extension harness - 48" 6 Pin Molex	$ 35.00	
66760K	MVP Plow Adaptor Kit (MVP to Straight Blade adapter)	$ 64.00	
62490	FLEX ARM™ (flexible control mount)	$ 105.00	
	LOAD BOOSTERS (AIR BAGS)		
63720	Air bags (Ford F250-550 1999 & later)	$ 696.00	
	SECURITY LOCKS (UniMount ONLY!!)		
61935	ISARMATIC® Hyd Unit Lock	$ 86.00	
	PLOW WHEELS (UniMount® ONLY!!)		
62425	Dolly Wheel (pair) - PRO, PRO POLY, HEAVYWEIGHT	$ 291.00	
	MISCELLANEOUS ACCESSORIES		
27170	Conversion Kit (UltraMount to UniMount)	$ 292.00	
49663	Plow Side Straightblade FLEET FLEX to Non-FLEET FLEX Conversion Kit	$ 136.01	
49664	Vehicle Side Straightblade FLEET FLEX to Non-FLEET FLEX Conversion Kit	$ 402.87	
49665	Complete Straightblade FLEET FLEX to Non-FLEET FLEX Conversion Kit	$ 542.95	
20043-1	MVP and MVP PLUS Spring Removal Tool	$ 52.00	
62849	Ballast Retainer Kit	$ 152.00	
68280	Showroom Parts Display Kit	$ 5,482.00	
43082	Blade Stop Kit	$ 167.00	
44473	MVP PLUS Blade Stop Kit (7-1/2', 8-1/2' & 9-1/2')	$ 165.65	

Western Products
P.O. BOX 245038
MILWAUKEE, WI 53224

A DIVISION OF DOUGLAS DYNAMICS, LLC

Distributor Price Sheet

STEEL CUTTING EDGES

2016 In-Season Pricing
August 1, 2016

The price list below is a complete listing of standard and accessory steel cutting edges, sorted by length

Part #	Description	Standard Edge	List	
49264	6-1/2' Sport Utility (6-1/2' x 1/4" x 5")		$ 126.91	
49066	6-1/2' Standard (6-1/2' x 3/8" x 6")		$ 117.55	
27713	6'-8" Suburbanite™ (6' 8" x 1/4" x 5")	X	$ 151.00	
49070	7' Standard (7' x 3/8" x 6")		$ 135.23	
63541	7'-2" LSX (7' 2" x 3/8" x 6")		$ 175.81	
27714	7'-4" Suburbanite (7' 4" x 1/4" X 5")	X	$ 185.00	
58814	7-1/2' Conventional (center-punched) (7-1/2' x 3/8" x 6")		$ 166.44	
69499	7-1/2' HTS™ (7-1/2' x 5/16" x 6")	X	$ 139.40	
28594	7-1/2' MIDWEIGHT™ / HTS (7-1/2' x 3/8" x 6")	X	$ 169.56	
49088	7-1/2' PRO-PLOW® (7-1/2' x 3/8" x 6")	X	$ 128.99	
49346	7-1/2' PRO-PLOW (7-1/2' x 1/2" x 6")		$ 164.00	
49312	7-1/2' Standard Poly, PRO Poly (7-1/2' x 3/8" x 6")	X	$ 163.32	
49350	7-1/2' PRO Poly (7-1/2' x 1/2" x 6")		$ 192.00	
64775	7-1/2' PRO PLUS® & WIDE-OUT™(7-1/2' x 1/2" x 6")	X	$ 188.29	
57865	WIDE-OUT Wing Steel		$ 205.00	
44561-2	7-1/2' MVP PLUS™ and MVP 3™ UltraMount® (7-1/2' x 3/8" x 6")	X	$ 361.00	
44284-2	7-1/2' MVP PLUS and MVP3 UltraMount (7-1/2' x 1/2" x 6")		$ 396.00	
49080	8' Standard (Conventional) (8' x 3/8" x 6")		$ 158.12	
49089	8' PRO (8' x 3/8" x 6")	X	$ 171.64	
49347	8' PRO (8' x 1/2" x 6")		$ 179.00	
49328	8' PRO Poly (8' x 3/8" x 6")	X	$ 175.81	
49351	8' PRO Poly (8' x 1/2" x 6")		$ 197.00	
63980	8' PRO PLUS (8' x 1/2" x 6")	X	$ 193.49	
49086	8-1/2' PRO (8-1/2' x 3/8" x 6")	X	$ 184.13	
49348	8-1/2' PRO (8-1/2' x 1/2" x 6")		$ 215.00	
63985	8-1/2' PRO PLUS (8-1/2' x 1/2" x 6")	X	$ 204.93	
21608	8-1/2' MVP® (DS or PS) w/o carbide - UniMount® & UltraMount (3/8")		$ 150.84	
28407	8-1/2' MVP (DS or PS) w/o carbide - UniMount & UltraMount (1/2")		$ 198.00	
64213	8-1/2' MVP Kit w/o carbide - UltraMount & UniMount (3/8")		$ 389.07	
28409	8-1/2' MVP Kit w/o carbide - UltraMount & UniMount (1/2")		$ 420.00	
62649	8-1/2' MVP (DS) w/carbide UniMount & UltraMount (3/8")		$ 213.26	
63284	8-1/2' MVP (PS) w/carbide - UniMount & UltraMount (3/8")		$ 213.26	
63540	8-1/2' MVP Kit w/carbide - UniMount & UltraMount (3/8")		$ 503.13	
44564-2	8-1/2' MVP PLUS and MVP3 UltraMount (3/8")	X	$ 380.00	
44285-2	8-1/2' MVP PLUS and MVP3 UltraMount (1/2")		$ 444.00	
49799	8-1/2' PRODIGY™ (1/2")	X	$ 198.69	
49251	9' PRO (9' x 3/8" x 6")		$ 205.97	
49349	9' PRO (9' x 1/2" x 6")		$ 226.00	
58817	9' UniMount Heavyweight (9' x 1/2" x 6")		$ 214.30	
63990	9' PRO PLUS (9' x 1/2" x 6")	X	$ 217.42	
63678	9-1/2' MVP (DS or PS) - UniMount & UltraMount (1/2")		$ 170.60	
66420	9-1/2' MVP Cutting Edge Kit - UniMount & UltraMount (1/2")		$ 439.31	
44567-2	9-1/2' MVP PLUS and MVP 3 UltraMount (1/2")	X	$ 503.00	
58818	10' UniMount Heavyweight (10' x 1/2" x 6")	X	$ 223.66	

*** PLEASE REFER TO THE CUTTING EDGE GUIDELINE REFERENCE SHEET FOR ADDITIONAL CUTTING EDGE SPECS: WEIGHT, MATERIAL, HOLE SIZE & SPACING, ETC. ***

Western Products
P.O. Box 245038
Milwaukee, WI 53224
A DIVISION OF DOUGLAS DYNAMICS, LLC

PILE DRIVER™ Pusher Plows

2016 In-Season Pricing

August 1, 2016

COMPLETE PACKAGE PRICING

Part #	Description	LIST		EST WT
69950	8' SKID STEER	$ 2,796.00		710 lbs.
69955	10' SKID STEER	$ 3,003.00		790 lbs.
69960	10' BACKHOE	$ 3,728.00		1030 lbs.
69965	12' BACKHOE	$ 4,038.00		1150 lbs.
69970	12' LOADER	$ 5,100.00		1680 lbs.
69975	14' LOADER	$ 5,514.00		1815 lbs.
69980	16' LOADER	$ 5,928.00		1950 lbs.

PUSHER PLOW ACCESSORIES

PART #	DESCRIPTION	LIST		EST WT
72041	Binder Kit-LD	$ 342.00		40 lbs.
72042	Binder Kit-BH	$ 285.00		30 lbs.
72069	Level Gauge	$ 86.00		1 lbs.
72048	Wear Shoe - Super Duty - LD	$ 646.00		116 lbs.
72049	Wear Shoe - Super Duty - SS & BH	$ 409.00		54 lbs.
72051	Self Leveling Shoe - Standard - LD	$ 646.00		166 lbs.
72052	Self Leveling Shoe - Standard - SS & BH	$ 433.00		86 lbs.
72053	Self Leveling Shoe - Super Duty - LD	$ 833.00		166 lbs.
72054	Self Leveling Shoe - Super Duty - SS & BH	$ 568.00		86 lbs.
72056	10' Rubber Cutting Edge - BH & LD	$ 642.13		80 lbs.
72057	12' Rubber Cutting Edge - BH & LD	$ 777.10		97 lbs.
72058	14' Rubber Cutting Edge - BH & LD	$ 894.69		114 lbs.
72059	16' Rubber Cutting Edge - BH & LD	$ 1,023.52		130 lbs.
72061	8' Rubber Cutting Edge - SS	$ 300.62		24 lbs.
72062	10' Rubber Cutting Edge - SS	$ 381.39		30 lbs.

Western Products
7777 NORTH 73RD STREET
P.O. BOX 245038
MILWAUKEE, WI 53224
A DIVISION OF DOUGLAS DYNAMICS, LLC

Distributor Price Sheet

Tornado™ Series - Poly Hopper Spreaders

2016 In-Season Pricing
August 1, 2016

* TORNADO SERIES - POLY HOPPER SPREADERS *

All models include the following features (also noted below):

- Pintle-Chain Conveyor
- Hard Cover Poly Lids / Spill Guards
- Dual Electric Motors
- Two-piece top screen
- 15-1/2" Poly Spinner
- Adjustable Chute Assembly
- FLEET FLEX Variable Control
- Rear-mounted LED CHMSL

ONLY ONE TOP-LEVEL PART # NEEDS TO BE ORDERED FOR EACH MODEL!

Tornado Poly Hopper Series
***** Body & Adjustable Chute/Spinner assembly included in top-level part number *****

PART #	LIST
78000-1	**$7,217.00** **7' Poly Electric Hopper Spreader** 1.5 cu. yd. capacity, pintle-chain conveyor, dual electric motors (1/2 HP conveyor/1/3 HP spinner), 15 ½" poly spinner, dual variable speed FLEET FLEX control, hard cover poly lids, two-piece top screens, two position adj. chute, LED CHMSL (center high mounted stop light) are all standard equipment.
78318	**$7,922.00** **7' Poly Electric Hopper Spreader** - 24 V version of 1.5 cu yd spreader
78003-1	**$8,889.00** **8' Poly Electric Hopper Spreader** 1.8 cu. yd. capacity, pintle-chain conveyor, dual electric motors (1/2 HP conveyor/1/3 HP spinner), 15 ½" poly spinner, dual variable FLEET FLEX speed control, hard cover poly lids, two-piece top screens, two position adj. chute, LED CHMSL (center high mounted stop light) are all standard equipment.
78321	**$9,591.00** **8' Poly Electric Hopper Spreader** - 24 V version of 1.8 cu yd spreader
78006-1	**$10,001.00** **8' Poly Electric Hopper Spreader** 2.5 cu. yd. capacity, pintle-chain conveyor, dual electric motors (1/2 HP conveyor/1/3 HP spinner), 15 ½" poly spinner, dual variable speed FLEET FLEX control, hard cover poly lids, two-piece top screens, two position adj. chute, LED CHMSL (center high mounted stop light) are all standard equipment.
78324	**$10,691.00** **8' Poly Electric Hopper Spreader** - 24 V version of 1.5 cu yd spreader

* TORNADO UTV SERIES - POLY HOPPER SPREADERS *

Tornado™ UTV Poly Hopper Series

PART #	LIST
78600	**$5,950.00** **5'4" Poly Electric Hopper Spreader** 11 cu. ft. capacity, auger driven, dual electric motors, 12" steel spinner, dual variable speed control, fitted tarp cover, top screen, quick connect chute, bed mount kit, and one 12V DC Vibrator are all standard equipment.

TORNADO ACCESSORY OPTIONS:

PART #	DESCRIPTION	LIST	
78120	Stainless Steel Inverted V - fits 1.8 cu yd and 2.5 cu yd models	$292.00	
78150	Stainless Steel Inverted V - fits 1.5 cu yd model	$292.00	
51106	Optimum Flow Kit	$389.00	
51107	Auger Tube Restrictor Kit	$234.00	
99504-1	Vibrator Kit - FLEET FLEX	$378.00	
99766	Strobe Light Kit - FLEET FLEX Tornado	$207.00	
78197	License Plate Light Kit - FLEET FLEX Tornado	$48.00	
99505-1	Work Light Kit - FLEET FLEX	$109.00	
99732-1	Secondary Work Light Kit - FLEET FLEX	$81.00	

NOTE: Volume Discounts (above) available ONLY to those dealers who purchased a qualifying amount in their Pre-Season order.

Western Products
7777 NORTH 73RD STREET
P.O. BOX 245038
MILWAUKEE, WI 53224
A DIVISION OF DOUGLAS DYNAMICS, LLC

DISTRIBUTOR PRICE SHEET
Striker™ SERIES

2016 In-Season Pricing
August 1, 2016

	LIST
STRIKER HOPPER SPREADERS -- STAINLESS STEEL	
99030	**$6,745.00** **7' 1.5 cu yd. Capacity Electric Motor** Stainless steel construction, dual electric motor, in-cab FLEETFLEX electric controls with harnesses, adjustable chute (with accessory chute extension kit - not included).
99031	**$7,293.00** **8' 2.0 cu yd. Capacity Electric Motor** Stainless steel construction, dual electric motor, in-cab FLEETFLEX electric controls with harnesses, adjustable chute (with accessory chute extension kit - not included).
99032	**$7,220.00** **8' 2.0 cu yd. Capacity Briggs and Stratton Motor** Stainless steel construction, electric clutch, 10.5 hp B&S engine, electric throttle control - cab mounted, adjustable chute (with accessory chute extension kit - not included).
99033	**$8,089.00** **8' 2.0 cu yd. Capacity Honda Motor** Stainless steel construction, electric clutch, 11 hp Honda engine, electric throttle control - cab mounted, adjustable chute (with accessory chute extension kit - not included).
99034	**$7,252.00** **8' 2.0 cu yd. Capacity Hydraulic Motor** Stainless steel construction, hydraulic drive spreader with dual hydraulic motor, adjustable chute (with accessory chute extension kit - not included). (Hoses and fittings required to complete installation.)
99035	**$8,870.00** **9' 3.0 cu yd. Capacity Electric Motor** Stainless steel construction, dual electric motor, in-cab FLEETFLEX electric controls with harnesses; adjustable chute.
99036	**$8,575.00** **9' 3.0 cu yd. Capacity Briggs and Stratton Motor** Stainless steel construction, electric clutch, 10.5 hp B&S engine, electric throttle control - cab mounted; adjustable chute.
99037	**$9,435.00** **9' 3.0 cu yd. Capacity Honda Motor** Stainless steel construction, electric clutch, 11 hp Honda engine, electric throttle control - cab mounted; adjustable chute.
99038	**$8,047.00** **9' 3.0 cu yd. Capacity Hydraulic Motor** Stainless steel construction, hydraulic drive spreader with dual hydraulic motor, adjustable chute. (Hoses and fittings required to complete installation.)
99039	**$10,841.00** **9' 4.5 cu yd. Capacity Electric Motor** Stainless steel construction, dual electric motor, in-cab FLEETFLEX electric controls with harnesses; adjustable chute.
99040	**$10,546.00** **9' 4.5 cu yd. Capacity Briggs and Stratton Motor** Stainless steel construction, electric clutch, 10.5 hp B&S engine, electric throttle control - cab mounted; adjustable chute.
99041	**$11,406.00** **9' 4.5 cu yd. Capacity Honda Motor** Stainless steel construction, electric clutch, 11 hp Honda engine, electric throttle control - cab mounted; adjustable chute.
99042	**$10,045.00** **9' 4.5 cu yd. Capacity Hydraulic Motor** Stainless steel construction, hydraulic drive spreader with dual hydraulic motor, adjustable chute. (Hoses and fittings required to complete installation.)
99043	**$10,940.00** **10' 4.5 cu yd. Capacity Briggs and Stratton Motor** Stainless steel construction, electric clutch, 10.5 hp B&S engine, electric throttle control - cab mounted; adjustable chute.
99044	**$11,801.00** **10' 4.5 cu yd. Capacity Honda Motor** Stainless steel construction, electric clutch, 11 hp Honda engine, electric throttle control - cab mounted; adjustable chute.
99045	**$10,053.00** **10' 4.5 cu yd. Capacity Hydraulic Motor** Stainless steel construction, hydraulic drive spreader with dual hydraulic motor, adjustable chute. (Hoses and fittings required to complete installation.)
99046	**$12,911.00** **10' 6.0 cu yd. Capacity Briggs and Stratton Motor** Stainless steel construction, electric clutch, 10.5 hp B&S engine, electric throttle control - cab mounted; adjustable chute.
99047	**$13,772.00** **10' 6.0 cu yd. Capacity Honda Motor** Stainless steel construction, electric clutch, 11 hp Honda engine, electric throttle control - cab mounted; adjustable chute.
99048	**$12,024.00** **10' 6.0 cu yd. Capacity Hydraulic Motor** Stainless steel construction, hydraulic drive spreader with dual hydraulic motor, adjustable chute. (Hoses and fittings required to complete installation.)

BATTERY OPTIONS -- ** MUST MAKE A SELECTION (FOR GAS ENGINE SPREADERS) **	
65605-3	**$126.00** **Spreader Battery Kit - Less Battery**
94680	**$256.00** **Vehicle Battery Harness Kit**

NOTE: Volume Discounts (above) available ONLY to those dealers who purchased a qualifying amount in their Pre-Season order.

Western Products
P.O. Box 245038
Milwaukee, WI 53224
A Division of Douglas Dynamics, LLC

Distributor Price Sheet
Hopper Spreader Accessories

2016 In-Season Pricing
August 1, 2016

Hopper Spreader Accessories

Part #	Description	Striker™ Electric Motor	Striker B&S Motor	Striker Honda Motor	Striker Hydraulic Motor	Tornado™ Series	List	
Inverted Vs:								
99482	Stainless Steel Striker, 7' and 8'	Standard					$ 133.75	
99119	Stainless Steel Striker, 9' and 10'	Standard					$ 191.68	
78120	Stainless Steel Tornado (1.8 & 2.5 models)					X	$ 292.00	
78150	Stainless Steel Tornado (1.5 model)					X	$ 292.00	
Striker Chute Extension Kits								
99139	Striker Electric Chute Extension Kit	X					$ 174.80	
99619	Striker Gas Chute Extension Kit		X	X			$ 262.78	
99698	Striker Hydraulic Chute Extension Kit				X		$ 231.70	
Hold Down Kits:								
99690	Heavy Duty Hold Down Kit (Chain & Turnbuckle)	X	X	X	X		$ 475.00	
68790	Hold Down Kit (Ratchet & Web)	Standard				X	$ 134.00	
Extensions:								
99488	6" Side Extension	X	X	X	X		$ 254.00	
68508	4' Extension Harness (Cab Control) 7-pin		X	X			$ 44.00	
66460	4' Extension Harness (Cab Control) 11-pin		X	X			$ 95.00	
68523	4' Extension Harness (Power/Battery)		X	X			$ 44.00	
Hydraulic Control Valves:								
95245	Dual Flow Hydraulic Control Valve - Hopper				X		$ 655.00	
Misc.								
99629	Master Accessory Harness - Striker Gas [1]		X	X			$ 215.00	
99627	Master Accessory Harness - Striker Hydraulic [1]				X		$ 215.00	
99504-1	Vibrator Kit - FLEET FLEX	X	X	X	X	X	$ 378.00	
99494	Strobe Light Kit - FLEET FLEX Striker	X	X	X	X		$ 207.00	
99766	Strobe Light Kit - FLEET FLEX Tornado					X	$ 207.00	
78197	License Plate Light Kit - FLEET FLEX Tornado					X	$ 48.00	
99686	License Plate Light Kit - FLEET FLEX Striker	X	X	X	X		$ 29.00	
99505-1	Work Light Kit - FLEET FLEX	X	X	X	X	X	$ 109.00	
99732-1	Secondary Work Light Kit - FLEET FLEX	X	X	X	X	X	$ 81.00	

1 - For all gas and hydraulic Striker Hopper Spreaders, the first accessory requires its respective Master Accessory Harness, each subsequent accessory will hook into the harness.

WESTERN	**Western Products** **7777 NORTH 73RD STREET** **MILWAUKEE, WI 53223** A DIVISION OF DOUGLAS DYNAMICS, LLC	**Distributor Price Sheet** **Low Profile Tailgate Spreaders** **Complete Package Pricing** **2016 In-Season Pricing** **August 1, 2016**

COMPLETE PACKAGE PRICING - LOW PROFILE

LOW-PRO 300W - WIRELESS ELECTRIC TAILGATE SPREADER:

Description	List			
Model 300W w/Receiver Mount & Wireless On/Off Control	$ 1,000.00			

LP 500 - SUV TAILGATE SPREADER:

Description	List			
Model 500 w/Receiver Mount & Basic On/Off Control	$ 1,786.00			
Model 500 w/Receiver Mount & Variable Speed Control	$ 2,105.00			

LP 1000 - ECONOMY TAILGATE SPREADER:

Description	List			
Model 1000 w/Fixed Mount & Basic On/Off Control	$ 1,925.00			
Model 1000 w/Fixed Mount & Variable Speed Control	$ 2,244.00			
Model 1000 w/Receiver Hitch Mount & Basic On/Off Control	$ 2,099.00			
Model 1000 w/Receiver Hitch Mount & Variable Speed Control	$ 2,418.00			
Model 1000 w/Swing Away Mount & Basic On/Off Control	$ 2,244.00			
Model 1000 w/Swing Away Mount & Variable Speed Control	$ 2,563.00			

LP 2500 - PREMIUM TAILGATE SPREADER:

Description	List			
Model 2500 w/Receiver Hitch Mount & Basic On/Off Control	$ 2,523.00			
Model 2500 w/Receiver Hitch Mount & Variable Speed Control	$ 2,842.00			

NOTE: Volume Discounts (above) available ONLY to those dealers who purchased a qualifying amount in their Pre-Season order.

WESTERN	**Western Products** **7777 NORTH 73RD STREET** **MILWAUKEE, WI 53223** A DIVISION OF DOUGLAS DYNAMICS, LLC	**Distributor Price Sheet** **Low Profile Tailgate Spreaders** **Component Pricing** **2016 In-Season Pricing** **August 1, 2016**

LOW PROFILE TAILGATE SPREADER COMPONENTS

Part #	Description	List			
91600	**LOW-PRO 300W - Wireless Tailgate Spreader** **HOPPER AND 2" RECEIVER HITCH MOUNT** Features 3 cu. ft. capacity and low profile poly hopper with a 10" reinforced nylon spinner. Includes Wireless Control.	$ 1,000.00			
95330	**Model 500 - SUV Tailgate Spreader** **HOPPER AND CLASS III RECEIVER HITCH MOUNT** Features 5 cu. ft. capacity and low profile poly hopper with a 10" poly spinner and ratchet tie straps. Requires choice of control only.	$ 1,646.00			
68800	**Model 1000 - Economy Tailgate Spreader** **HOPPER ONLY** Features 8 cu. ft. capacity and low profile poly hopper with 10" poly spinner. Requires choice of mount & control	$ 1,619.00			
96051-2	**Model 2500 - Premium Tailgate Spreader** **HOPPER AND CLASS IV RECEIVER HITCH MOUNT** Features 8.5 cu. ft. capacity low profile, poly hopper, 12V DC motor, 15" diameter poly spinner, adjustable feedgate, & deflectors. Includes class IV hitch mount & nylon ratchet straps. Requires choice of control only.	$ 2,383.00			

LP 300W MOUNT OPTIONS

****** Base Model INCLUDES 2" Receiver Hitch ******

		LIST	
75919	2" Receiver Hitch	$ 130.00	
75920	UTV Mount	$ 379.00	
75921	Trailer Mount	$ 466.00	
75922	General Utility Vehicle Mount	$ 250.00	
75923	Three Point Tractor Mount	$ 250.00	

LP 1000 MOUNT OPTIONS

****** Must Make a Selection for LP 1000 ONLY ******

		LIST	
67434	Fixed Mount	$ 166.00	
67435-1	SWING AWAY® Mount	$ 485.00	
94370	Receiver Hitch Mount (for model 1000 only; includes ratchet tie straps)	$ 340.00	
	(Use with a Class IV receiver hitch with a 1000 lb. tongue rating)		

CONTROL OPTIONS

****** Must Make a Selection ******

		LIST	
67070	Basic On/Off Control	$ 140.00	
28866	Variable Speed Control	$ 459.00	

LOW PROFILE ACCESSORY OPTIONS

		LIST	
48797	Model 2500 Top Screen & Bag Splitter Kit	$ 141.00	
75925	Model 300W Weather Cover	$ 51.00	
75924	Model 300W Supplemental 7 Pin Harness (ONLY if no 7 pin trailer hookup)	$ 118.00	
95457	Model 500 Screen Kit	$ 141.00	
95320	Model 500 Adjustable Deflector Kit	$ 195.00	
68811	Model 1000 & 2000 Screen Kit	$ 170.00	
67443	Truck Protector Flap - Model 1000 Only	$ 146.00	
67444	Model 1000 Adjustable Deflector Kit	$ 216.00	
95475	Low Profile Spinner Ring Kit	$ 76.30	

NOTE: Volume Discounts (above) available ONLY to those dealers who purchased a qualifying amount in their Pre-Season order.

Western Products

7777 NORTH 73RD STREET
MILWAUKEE, WI 53223

A DIVISION OF DOUGLAS DYNAMICS, LLC

Distributor Price Sheet

PRO-FLO™ 525 & PRO-FLO™ 900
Two-Stage Tailgate Spreaders

2016 In-Season Pricing
August 1, 2016

COMPLETE PACKAGE PRICING

PRO-FLO - TWO STAGE TAILGATE SPREADER

Description	LIST			
PRO-FLO™ 525 Two Stage Spreader	$ 3,547.00			
PRO-FLO™ 900 Two Stage Spreader w/ 2" hitch and extender	$ 4,628.00			
PRO-FLO 900 Two Stage Spreader w/ Swing Away	$ 4,450.00			
PRO-FLO 900 Two Stage Spreader w/ 3-Point	$ 4,385.00			

PRO-FLO TWO STAGE COMPONENTS

PRO-FLO 525 HOPPER ASSEMBLY

		LIST			
91800	**PRO-FLO 525 Spreader Assembly Only: Two Stage** (For 3/4 and 1 ton pickup trucks) 5 1/4 cu ft. poly 2-stage tailgate spreader with powder coated structural members, fixed deflector, and vinyl cover. Will spread any granular material including wet sand. Includes combination 2" Receiver Hitch/3 point Tractor Mount. Includes variable electric controls.	$ 3,547.00			

PRO-FLO 900 HOPPER ASSEMBLY

		LIST			
91850	**PRO-FLO 900 Spreader Assembly Only: Two Stage** (For 3/4 and 1 ton pickup trucks) 9 cu ft. poly 2-stage tailgate spreader with powder coated structural members, fixed deflector, and vinyl cover. Will spread any granular material including wet sand. Includes variable speed electric controls. *** DOES NOT INCLUDE MOUNT ***	$ 3,959.00			

PRO-FLO 900 MOUNT OPTIONS

*****PRO-FLO 900 MUST CHOOSE ONE*****

		LIST			
75915	2" Receiver Hitch Mount (900 Only)	$ 487.00			
75916	Receiver Hitch Adapter (MUST be included with 2" Receiver Hitch, 900 Only)	$ 182.00			
75917-1	Pivot Mount (900 Only)	$ 491.00			
75918	Three Point Tractor Mount (900 Only)	$ 426.00			

PRO-FLO ACCESSORIES

		LIST	
99505-1	Work Light Kit - FLEET FLEX	$ 109.00	
99732-1	Secondary Work Light Kit - FLEET FLEX	$ 81.00	
75913	Material Control Tube - PRO-FLO 525	$ 218.00	
75914	Material Control Tube - PRO-FLO 900	$ 229.00	

NOTE: Volume Discounts (above) available ONLY to those dealers who purchased a qualifying amount in their Pre-Season order.

Western Products
P.O. Box 245038
Milwaukee, WI 53224
A DIVISION OF DOUGLAS DYNAMICS, LLC

WALK-BEHIND SPREADERS

2016 In-Season Pricing

August 1, 2016

COMPLETE PACKAGE PRICING

Part #	Description	LIST Units		EST WT
85101	WB-100B Broadcast Spreader, 100 lb. capacity	$ 400.00		30 lbs.
85201	WB-160D Drop Spreader, 160 lb. capacity	$ 786.00		55 lbs.

Western Products
P.O. Box 245038
Milwaukee, WI 53224
A Division of Douglas Dynamics, LLC

Net Price Sheet
Snowplow Accessories Matrix
2016 In-Season Pricing
August 1, 2016

Part #	Description	Suburbanite™ 6'8"	Suburbanite 7'4"	HTS™ 7'6"	MIDWEIGHT™ 7'6"	MIDWEIGHT Poly 7'6"	PRO-PLOW® 7'6"	PRO Poly 7'6"	PRO-PLOW 8'0"	PRO Poly 8'0"	PRO-PLOW 8'6"	PRO PLUS® 8'0"	PRO PLUS 8'6"	PRO PLUS 9'0"	Heavyweight 10'0"	List
49346	½″ STEEL CUTTING EDGE					X										$ 164.00
49347	½″ STEEL CUTTING EDGE							X								$ 179.00
49348	½″ STEEL CUTTING EDGE									X						$ 215.00
49350	½″ STEEL CUTTING EDGE						X									$ 192.00
49351	½″ STEEL CUTTING EDGE								X							$ 197.00
63980	½″ STEEL CUTTING EDGE[3]										X					$ 193.49
63985	½″ STEEL CUTTING EDGE[3]											X				$ 204.93
63990	½″ STEEL CUTTING EDGE[3]												X			$ 217.42
64775	½″ STEEL CUTTING EDGE[3]			X												$ 188.29
28594	3/8″ STEEL CUTTING EDGE			X												$ 169.56
49326	2 oz. GREASE	X	X	X	X	X	X	X	X	X	X	X	X	X	X	$ 10.00
64758	BACK DRAG EDGE			X	X	X	X	X								$ 112.48
66892	BACK DRAG EDGE							X	X		X					$ 118.00
66991	BACK DRAG EDGE												X			$ 127.81
66999	BACK DRAG EDGE									X		X				$ 123.00
44403	CURB GUARD, SINGLE[2]					X	X	X	X	X						$ 101.23
43885	CURB GUARD, PAIR[2]			X	X	X					X	X	X	X	X	$ 238.00
62490	FLEX CONTROL MOUNT	X	X	X	X	X	X	X	X	X	X	X	X	X	X	$ 105.00
63670	POLY DEFL.							X		X	X	X	X			$ 166.00
63700	POLY DEFL.				X	X	X									$ 152.00
49305K	PRO GRIP MOUNT KIT	X	X	X	X	X	X	X	X	X	X	X	X	X	X	$ 13.00
49311	QT FLUID	X	X	X	X	X	X	X	X	X	X	X	X	X	X	$ 12.00
60825	RUBBER CUTTING EDGE					X										$ 402.00
60831	RUBBER CUTTING EDGE														X	$ 728.00
62556	RUBBER CUTTING EDGE					X		X								$ 416.00
62123-1	RUBBER DEFL.			X	X	X	X									$ 169.00
62124-1	RUBBER DEFL.														X	$ 267.00
62220-1	RUBBER DEFL.									X		X	X			$ 213.00
62530-1	RUBBER DEFL.							X			X					$ 203.00
56990	18" RUBBER DEFL.										X	X	X			$ 401.00
27710	SHOE KIT	X	X													$ 150.00
64392	SHOE KIT				X	X										$ 120.00
69570	SHOE KIT			X												$ 121.00
64410	WING EXT KIT										X	X	X			$ 743.00

[1] MVP 3™ cannot use plow shoes and backdrag edges simultaneously
[2] Curb Guards cannot be used simultaneously with Wing Extension Kits
[3] 1/2" is standard for PRO PLUS, MVP PLUS™ & WIDE-OUT™; item sold as Service Part

Western Products
P.O. Box 245038
Milwaukee, WI 53224
A Division of Douglas Dynamics, LLC

Net Price Sheet
Snowplow Accessories Matrix

2016 In-Season Pricing
August 1, 2016

Part #	Description	PRODIGY™	WIDE-OUT™	MVP PLUS™ 7'6"	MVP 3™ 7'6" [1]	MVP PLUS Poly 7'6"	MVP 3 SS 7'6" [1]	MVP PLUS 8'6"	MVP 3 8'6" [1]	MVP PLUS Poly 8'6"	MVP 3 Poly 8'6" [1]	MVP 3 SS 8'6" [1]	MVP PLUS 9'6"	MVP 3 9'6" [1]	MVP PLUS Poly 9'6"	MVP 3 Poly 9'6" [1]	MVP 3 SS 9'6" [1]	List
44284-2	½″ STEEL CUTTING EDGE			X	X	X	X											$ 396.00
44285-2	½″ STEEL CUTTING EDGE							X	X	X	X	X						$ 444.00
44567-2	½″ STEEL CUTTING EDGE												X	X	X	X		$ 503.00
64775	½″ STEEL CUTTING EDGE[3]		X															$ 188.29
57865	½″ STEEL WO WING EDGE		X															$ 205.00
49326	2 oz. GREASE	X	X	X	X	X	X	X	X	X	X	X	X	X	X	X	X	$ 10.00
42437	BACK DRAG EDGE	X																$ 133.00
44281-3	BACK DRAG EDGE			X	X	X	X											$ 230.00
44282-3	BACK DRAG EDGE							X	X	X	X	X						$ 283.00
44283-3	BACK DRAG EDGE												X	X	X	X	X	$ 316.00
52278	BACK DRAG EDGE		X															$ 170.00
44473	BLADE STOP KIT			X		X		X		X			X		X			$ 165.65
43082	BLADE STOP KIT				X		X		X		X	X		X		X	X	$ 167.00
43885	CURB GUARD, PAIR[2]			X	X	X	X	X	X	X	X	X	X	X	X	X	X	$ 238.00
62490	FLEX CONTROL MOUNT	X	X	X	X	X	X	X	X	X	X	X	X	X	X	X	X	$ 105.00
49305K	PRO GRIP MOUNT KIT	X	X	X	X	X	X	X	X	X	X	X	X	X	X	X	X	$ 13.00
49311	QT FLUID	X	X	X	X	X	X	X	X	X	X	X	X	X	X	X	X	$ 12.00
42384	RUBBER DEFL.	X																$ 281.00
44280	RUBBER DEFL.			X		X		X		X			X		X			$ 281.00
41810	RUBBER DEFL.				X		X		X		X	X		X		X	X	$ 283.00
41811	RUBBER DEFL. (EXT)				X		X		X		X	X		X		X	X	$ 411.00
52280	DEFLECTOR KIT		X															$ 324.00
44277-1	SHOE KIT		X	X		X		X		X			X		X			$ 168.00
43088	SHOE KIT				X		X		X		X	X		X		X	X	$ 203.00
49853	SHOE KIT	X																$ 111.45
44510-1	WING EXT KIT							X		X					X			$ 743.00
43510	WING EXT KIT								X		X	X		X		X	X	$ 764.00

[1] MVP 3 cannot use plow shoes and backdrag edges simultaneously
[2] Curb Guards cannot be used simultaneously with Wing Extension Kits
[3] 1/2" is standard for PRO PLUS®, MVP PLUS & WIDE-OUT; item sold as Service Part

WHELEN
ENGINEERING COMPANY, INC.

AUTOMOTIVE LIST PRICE

No. PL17.0WL **EFFECTIVE:** December 21, 2016 **VOID:** June 29, 2017

WHELEN
MANUFACTURED IN AMERICA

Order Anytime Day or Night by E-mail: autoorder@whelen.com
or Toll Free Facsimile 1-800-637-8762

Many products listed in this price list meet or exceed AMECA, SAE and California Title XIII requirements. For details contact your regional sales office. Every effort will be made to hold prices through the end date. We reserve the right to increase prices on certain and/or all products. Whelen Engineering Company, Inc. is not responsible for typographical errors.

ISO 9001 Registered QMS

OFFICIAL WARNING LIGHTS OF NASCAR

Follow us on

WHELEN® NEW PRODUCTS FOR PL17.0

5G Series Super-LED® and LED Grommet Mount Lightheads
5GBOXB Optional 5G box, Black

ION™ T-Series™ Linear Super-LED Surface Mount

TLI* Red, Blue, Amber or White
TLI# Split color, Amber/Blue, Amber/White, Blue/White, Red/Blue or Red/White only
TLI2# DUO™ color, Amber/Blue, Amber/White, Blue/White, Red/Blue or Red/White only
TLI*X Red, Blue, Amber or White with Smoked lens
TLI#X Split color, Amber/Blue, Amber/White, Blue/White, Red/Blue or Red/White only with Smoked lens
TLI2#X DUO color, Amber/Blue, Amber/White, Blue/White, Red/Blue or Red/White only with Smoked lens
TIONBKT4 Universal over/under "L" mounting bracket for two TLI™ lightheads

M6 Series Linear Super-LED Surface Mount
M6WLENX Replace Clear lens with a Smoked lens, for M6 warning models only

M7 Series Linear Super-LED Surface Mount
M7WLENX Replace Clear lens with a Smoked lens, for M7 warning models only

M9 Series Linear Super-LED Surface Mount

M9JCZ DUO Red/Blue, combination warning/scene light

Pioneer™ Series & Pioneer Plus™ Series, Lightbar Mount, Super-LED Floodlight
PFS2F41 1 dual PFS2 Pioneer center mounted for 55" and up, combination flood/spot
PFS2F42 2 dual PFS2 Pioneers with mounting brackets for 72" and up, combination flood/spot

Pioneer Plus Surface Mount Dual Flood/Spot Combination

PCPSM2AC Dual panel, combination flood/spot, 115 VAC, UL® listed, Chrome flange
PCPSM2AB Dual panel, combination flood/spot, 115 VAC, UL listed, Black flange

Pioneer LiFe™ Battery Operated Portable Area Light Series

LF35 12 VDC, rechargeable
LF35A 115 - 240 VAC, rechargeable, with standard NEMA plug for U.S.
LF35E 240 VAC, rechargeable, with CEE7 plug for Europe
LF35BASE Optional non-charging base only
LF35CB12 Optional 12 VDC, charging base only
LF35CBAC Optional 115 - 240 VAC, charging base only, with standard NEMA plug for U.S.
LF35CBAE Optional 240 VAC, charging base only, with CEE7 plug for Europe

Options for LINSV2™ V-Series™ Linear Super-LED
LSVBKT47 Ford F-150, 2015-2017, under-the-side view mirror mount for two LINSV2 series

295SSA & 295SDA Series

295SSA2 Single tone siren with hand held control head
295SDA2 Dual tone siren, for two 100 watt speakers, with hand held control head

Optional Mounting Brackets for SA315 Series
SAK59 Ford Fusion, 2017
SAK60 Toyota Tacoma, 2016-2017

Single and Dual Speaker, for Ambulances
SPT5TEMP Speaker templates, reusable, for 2015-2017 Ford Transit, includes driver side and passenger side

Traffic Advisor™ Accessories
DELTAC5 Delete TACTL5 from 6 to 8 light LED or halogen Traffic Advisor - DEDUCT
DELTAC6 Delete TACTL6 from 16 lamp LED or halogen Traffic Advisor - DEDUCT

Options for Tracer™ Series
All SUVs and Pickup Trucks must have Factory Running Boards
TCRB44 2015-2017 Dodge Durango, running board mounting kit, for 5 lamp Tracer, each
TCRB42 2015-2017 Dodge Ram 1500 crew cab, running board mounting kit, for 6 lamp Tracer, each
TCRB45A 2015-2016 Chevy Silverado 1500 crew cab, running board mounting kit, for 6 lamp Tracer, each
TCRB39 2015-2016 Ford F-250/F-350 crew cab, running board mounting kit, for 6 lamp Tracer, each

Mini Edge® Freedom® IV Super-LED Series Lightbars
F4B**P** 23.29" long, with center section, permanent mount, Amber, Blue, Red and/or White

Inner Edge® RTX Series Rear Facing Super-LED Lightbars

ISTRAYT 8 lamp tray, 6 lamp Traffic Advisor (2 wire control) with 2 end flashers, low current, choose 8 SOLO™ lightheads and vehicle specific shroud and mount
IWSTRAYT 8 lamp tray, 6 lamp Traffic Advisor (2 wire control) with 2 end flashers, WeCan®, choose 8 SOLO lightheads and vehicle specific shroud and mount

Edge Freedom IV Rota-Beam™ Series Options
FRDSCBL Driver side cable exit, for lightbars up to 60" long
F4RDSC72 Driver side cable exit, for lightbars 72" or longer

Towman's™ Freedom IV Series

F40BAAAA 60" long, low current, 3 slide bolt mounting brackets, Amber, and eight inboard modules
F4EDLA One single color long economy DYAD™ lighthead, Amber

Options, Mounting Kits
MKEZ97 Toyota Tacoma / 2016-2017 / 48"

Options, Low Profile
MKLP97 Toyota Tacoma / 2016-2017 / 48"

24 VDC Lightheads and Mini Edge Freedom IV Series Lightbars
Refer to 24 VDC section of this pricelist for complete listing

Green Product Beacons, Lightheads, and Mini Lightbars
Refer to Green Product section of this pricelist for complete listing

COMING SOON....

Avenger® II Series

- Dash and Deck light with newly designed combination Linear/TIR optics with improved light output
- Smaller profile to maximize space

CANnect™ Vehicle Interface

- Monitors vehicle signals, such as; door open, high beam, brake lights, etc., without cutting into the vehicle warning harnesses
- Plug and play, installs in-line with the vehicle's OBD2 diagnostic port and plugs into the CenCom Carbide™ box
- Easy to use programming for faster installations, saving time and money

Silicone Take-down Light for Liberty™ II Lightbar

- New optical Silicone lens increases light output
- 3 times the light output as the current 3 Super-LED take-down light

TUNE IN TO:

WeVision™

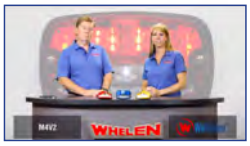

WHELEN TRADEMARKS are the property of Whelen Engineering Company, Inc. and may be used only as set forth in the GUIDELINES FOR USE OF WHELEN TRADEMARKS available at www.whelen.com. Unauthorized use of Whelen Trademarks for commercial purposes may constitute trademark infringement and unfair competition in violation of federal and state laws.

TABLE OF CONTENTS

Whelen Engineering maintains all of the tools and designs for every product manufactured over the last 50 plus years. Items not listed in this price list may be available as a special order. Contact the factory for price and availability.

"Made-To-Order Products" are defined as either models listed in this price sheet with a "†" symbol in front of the model field of each "made-to-order" model; or any model not listed in this price sheet. All such "†" noted models or those not listed in this price sheet are special order, non-returnable, non-cancelable. Please allow sufficient time for production, as these models may require multiple machines for the processing of these special parts.

Dash/ Deck/ Visor 1
- Dash/ Deck/ Visor, Directional 1

Beacons 2
- LED, Halogen, Rotating Beacons - Rota-Beam™ Series 2
- LED Beacons, Self-Contained 2

Flashers & Lightheads 4
- Flashers, Halogen & LED 4
- Lightheads, Super-LED®, LED, Halogen & Combination 4

Systems - DOT & Motorcycle 19
- DOT Wing Plow Super-LED® Lightheads 19
- DOT3® Super-LED® 19
- Motorcycle Warning Products 19
- Motorcycle Systems 20

Sirens, Switches & Speakers 21
- Switches And Control Boxes 21
- Siren Amplifiers, Amplifiers & Airhorns 21
- Siren Amplifier & Speaker Combination 23
- Siren Speakers, SA315 & SA314 Projector™ Series 23
- Siren Speakers, Other 24

Safety Site, Emitters & Back-Up Alarms 24
- Back-Up Alarms, Electronic 24
- Safety Site™ & Emitters 24

Traffic Advisors 24
- Traffic Advisor™ Series & Accessories 24

Tracer™ 25
- Tracer™ Series 25

Lightbars, Mini 26
- Century™ Series Mini Lightbars 26
- Mini Legacy™, Super-LED® Series Lightbars 26
- Mini Liberty™ II SOLO™, Super-LED® Series Lightbars 27
- Responder® LP Series Mini Lightbars 27
- Responder® HD Series Mini Lightbars 27
- Mini Edge® Freedom® IV DYAD™ Series Lightbars 27
- Mini Freedom® IV Rota-Beam™ Series Lightbars 28
- Mini Justice® Series 28

Lightbars 28
- Inner Edge® XLP, Extra Low Profile Series Lightbars 28
- Outer Edge® 32
- Freedom® IV DYAD™ Series Lightbars 33
- Freedom® IV Rota-Beam™ Super-LED® Series Lightbars 34
- Legacy® Super-LED® Series Lightbars 34
- Legacy® TRIO™ Series Super-LED® Lightbars 35
- Legacy SOLO™ Super-LED® Series Lightbars 35
- Liberty™ II Super-LED® Series Lightbars 36
- Liberty™ II TRIO™ Series Super-LED® Lightbars 38
- Justice® Super-LED® WeCan® Series Lightbars 38
- Justice® Super-LED® Competitor™ Series Lightbars 39
- Century™ Elite Series LED Lightbars 40
- Towman's™ Super-LED® Series Lightbars 40
- NFPA Lightbars 40
- 4500 Series Surface Mount Lightbars 40
- Options, Mounting Kits 41
- Replacement Parts, Mounting Kits & Strap Kits 42
- Options, Low Profile Mounting Kits 42
- Replacement Parts, Low Profile Mounting Kits & Strap Kits 43

24 VDC, Green Products & Parts 43
- 24 VDC Products 43
- Green Products 44
- Replacement Parts, Lens Kits 45
- Replacement Parts, Bulbs For Whelen Lights 45

A Complete Bulb Guide and Index Can Be Found at the Back of this Booklet

WHELEN ENGINEERING COMPANY, INC.

AUTOMOTIVE LIST PRICE

No. PL17.0WL EFFECTIVE: December 21, 2016 VOID: June 29, 2017

↓†† - Special Order, Non-Returnable, Non-Cancelable. See "Made-To-Order" Statement on Table of Contents Page of this Price List.

	MODEL	DESCRIPTION	LIST

Dash/ Deck/ Visor, Directional

Avenger® AVN Linear Super-LED® Series, Includes Swivel/Bail Bracket with Suction Cups, Hood, Cigar Plug with On/Off and Scan-Lock Flash Pattern Switch. (For Green, Contact Factory for Price, Availability and Minimum Order Requirements).

	AVN1*	Single, Red, Blue, Amber or White	204.00
	AVN1#	Single, Split Red/Blue, Red/White or Amber/White	218.00
	AVN2**	Dual, Red, Blue, Amber and/or White	356.00

Avenger® AVNS Linear Super-LED® Series with Synchronize Feature, Includes Scan-Lock™ Flash Patterns, Swivel/Bail Bracket with Suction Cup, Hood, 4-Wire Pigtail. (For Green, Contact Factory for Price, Availability and Minimum Order Requirements).

	AVNS1*	Single, Red, Blue, Amber or White, with Synchronize Wire	229.00
	AVNS2**	Dual, Red, Blue, Amber and/or White, with Synchronize Wire	379.00

Avenger® AVNT TRIO™ Linear Super-LED® Series, Includes Swivel/Bail Bracket with Suction Cups, Hood, Cigar Plug with On/Off Warning Switch and On/Off/Override Take-Down Switch. (Mode Switch for Color Choice and Scan-Lock™ Flash Pattern Switch are Located on the Avenger).

	AVNT1RBW	Single, Red/Blue/White, with White Steady Override	244.00
	AVNT1RBA	Single, Red/Blue/Amber, with Amber Steady Override	244.00
	AVNT1RAW	Single, Red/Amber/White, with White Steady Override	244.00
	AVNT1BAW	Single, Blue/Amber/White, with White Steady Override	244.00
	AVNT2RBW	Dual, Each Lighthead Red/Blue/White, with White Steady Override	469.00
	AVNT2RBA	Dual, Each Lighthead Red/Blue/Amber, with Amber Steady Override	469.00
	AVNT2RAW	Dual, Each Lighthead Red/Amber/White, with White Steady Override	469.00
	AVNT2BAW	Dual, Each Lighthead Blue/Amber/White, with White Steady Override	469.00

Avenger® AVN2LR Linear Super-LED® Series, Two Warning modules and Two LR11 Take Down Modules, Includes Swivel/Bail Bracket with Suction Cups, Hood, Cigar Plug with On/Off and Take Down Switch. (Scan-Lock™ Flash Pattern Switch is located on the Avenger).

	AVN2LRBB	Blue/Blue Warning with Two LR11 Take-Downs	387.00
	AVN2LRRB	Red/Blue Warning with Two LR11 Take-Downs	387.00
	AVN2LRRC	Red/White Warning with Two LR11 Take-Downs	387.00
	AVN2LRRR	Red/Red Warning with Two LR11 Take-Downs	387.00

Options for Avenger® Series

	AVNBKT1	Low Profile Mounting (Headliner) Bracket for AVN1/AVNS1/AVNT1 Series	14.50
	AVNBKT2	Low Profile Mounting (Headliner) Bracket for AVN2/AVNS2/AVNT2 Series	16.00
	AVNBKT3	Visor Mounting Bracket (2 required for Dual Unit), Each	14.50
	AVNBKT4	Adjustable Height Bracket Kit, for All Avengers	47.00
††	AVNBKT5	Headliner Mounting Bracket for 2003-2011 Ford Crown Victoria, for All Avengers	25.50

Dominator™ Plus LINZ6™ Super-LED® Series, Includes Slide Bolt Mounting. For Interior or Exterior Use. 1.74" High x 2.17" Deep Housing, Six Super-LED®s per Lamp. Replace symbol "§" with number of color LED lightheads required (maximum 8 modules). Order of colors are Red, Blue, Amber and White (i.e., DP822220 = 2 Red, 2 Blue, 2 Amber & 2 White, DP806020 = 0 Red, 6 Blue, 0 Amber & 2 White).

	DP2**	2 LINZ6™, 7.11", Amber, Blue, Red and/or White	332.00
	DP4****	4 LINZ6™, 14.21", Amber, Blue, Red and/or White	651.00
	DP6§§§§0	6 LINZ6™, 23.26", Amber, Blue, Red and/or White	935.00
	DP8§§§§0	8 LINZ6™, 30.36", Amber, Blue, Red and/or White	1210.00

Dominator™ Plus Traffic Advisor™, LINZ6™ Super-LED® Low Profile, Control Head Optional. 1.74" High x 2.17" Deep Housing, Six Super-LEDs per Lamp.

	TADP6	Six Lamp LINZ6™ Super-LED® Traffic Advisor™, 23.26" Long, Less Control Head	958.00
††	TADP8	Eight Lamp LINZ6™ Super-LED® Traffic Advisor™, 30.36" Long, Less Control Head	1249.00
††	TADP8**	Eight Lamp, Six Lamp LINZ6™ Super-LED® Traffic Advisor™, 30.36" Long, with Two End Flashing LEDs, Blue, Red and/or Amber, Less Control Head	1265.00

Dominator™ TIR3™ Super-LED® Series, Includes Slide Bolt Mounting. For Interior or Exterior Use. 1.74" High x 2.17" Deep Housing, Three Super-LED®s per lamp. Replace symbol "§" with number of color LED lightheads required (maximum 8 modules). Order of colors are Red, Blue, Amber and White (i.e., D822220 = 2 Red, 2 Blue, 2 Amber & 2 White, D806020 = 0 Red, 6 Blue, 0 Amber & 2 White).

	D2**	2 TIR3™, 7.11", Amber, Blue, Red and/or White	233.00
	D4****	4 TIR3™, 14.21", Amber, Blue, Red and/or White	359.00
	D6******	6 TIR3™, 23.26", Amber, Blue, Red and/or White	529.00
	D8§§§§0	8 TIR3™, 30.36", Amber, Blue, Red and/or White	675.00

Dominator™ Traffic Advisor™, TIR3™ Super-LED® Low Profile, Control Head Optional, 1.74" High x 2.17" Deep Housing, Three Super-LED®s per lamp.

††	TAD6	Six Lamp TIR3™ Super-LED® Traffic Advisor™, 23.26" Long, Less Control Head	558.00
††	TAD8	Eight Lamp TIR3™ Super-LED® Traffic Advisor™, 30.36" Long, Less Control Head	697.00
††	TAD8**	Eight Lamp, Six Lamp TIR3™ Super-LED® Traffic Advisor™, 30.36" Long, with Two End Flashing LEDs, Blue, Red and/or Amber, Less Control Head	708.00

Options for Dominator™ Series

	DBKT3	Swivel Mount Bracket Kit for D2, DP2, D4 & DP4 Series Only, Customer Installed	32.50
	DBKT4	"L" Angle Mounting Bracket Kit, Customer Installed	24.00

	DBKT5	Upper Rear Window Mounting Bracket Kit for 2008-2016 Chevy Tahoe and 2013-2017 Police Interceptor Utility	24.00
	TADCTL1	TAD/TADP Series Control Head Only	136.00
	TADSW1	On/Off Non-Lighted, SPDT 20 Amp Switch, for TADCTL1	16.50
	TADSW2	On/Off/On Non-Lighted, SPDT 20 Amp Switch, for TADCTL1	16.50

FlatLighter™ LED Series, Dual 400 Series High Intensity 5mm LEDs with Multiple Scan-Lock™ Flash Patterns. Color LEDs with Clear Outer Lens for Stealth Look (For Green, Contact Factory for Price, Availability and Minimum Order Requirements).

	FLLED**	Red and/or Amber	249.00
	FLLED**	1 Red or Amber and 1 White or Blue	319.00
	FLLED**	Blue and/or White	380.00
	43LENS*	400 Series Color Lens for FLLED Series, Customer Installed, Each	14.50

Slim-Miser™ LED Series, Dual 5mm LED Panels, Side-by-Side with Scan-Lock™ Flash Patterns, Includes a Cigar Plug with On/Off Switch and California Flash Patterns.

	SMLLAA	Amber/Amber	159.00
	SMLLRR	Red/Red	159.00
	SMLLBR	Red/Blue	159.00
	SMLLBB	Blue/Blue	159.00
††	SMLLBC	Blue/White	159.00
††	SMLLCR	Red/White	159.00

SlimLighter™ Super-LED® Series, Six Super-LED®s (per panel), Includes a Cigar Plug with an On/Off Switch and Scan-Lock™ Flash Patterns, Switch & Swivel Brackets with Suction Cups.

	SLPMM**	Amber, Blue, Red and/or White	403.00

SpitFire™ ION™ Super-LED® Series, Includes Integral Hood, Two Suction Cups, Cigar Plug with On/Off and a Scan-Lock™ Flash Pattern Switch.

	SFION*	Red, Blue, Amber or White	184.00
††	SFIOND	Split Red/White	184.00
	SFIONJ	Split Red/Blue	184.00
††	SFIONE	Split Blue/White	184.00

LED, Halogen, Rotating Beacons - Rota-Beam™ Series

RB6 Series, Amber, Blue or Red Only (For Green or Clear, Contact Factory for Price, Availability and Minimum Order Requirements). Consider LED Beacons.

	RB6T*P	Dual Reflector, 60 Watt Halogen, Permanent Mount	181.00
	WMM6K	Optional Magnetic Mount Kit	52.00

B6LED Series, Amber, Blue or Red Only (For Green or Clear, Contact Factory for Price, Availability and Minimum Order Requirements).

	B6MM**P	Super-LED® Beacon with Polished Base, Upper Section & Directional Linear Super-LED® Lighthead in Lower Section, Amber, Blue and/or Red	1120.00

B6T Series, Amber, Blue or Red Only (For Green or Clear, Contact Factory for Price, Availability and Minimum Order Requirements).

	B6TM**1P	RB6T Rotating Beacon with Polished Base, Upper Section & Directional Linear-LED® in Lower Section, Amber, Blue or Red	654.00

B63 Series, R316 Super-LED® Beacon with Polished Base, Upper Section & Choice of M7 or 700 Series Directional Super-LED® in Lower Section

	B63M7**	M7 in Lower Section, Amber, Red or Blue, Color Outer Lens	1428.00
	B6370**	700 in Lower Section, Amber, Red or Blue, Color Outer Lens	1397.00

LED Beacons, Self-Contained

L31 Series Super-LED® Beacon, Class 1 High Dome - Cast Aluminum Base, Includes Scan-Lock™, Hi/Low Power, Cruise and Synchronize Features.

	L31H*F	Amber, Blue, Red or White (Single Color Only) Flat Mount	599.00
	L31HAFCA	Amber, Flat Mount, CA Title 13 Compliant	599.00
††	L31H*F4	Amber, Blue or Red (Single Color Only) Flat Mount, 24 VDC	599.00
	L31H*M	Amber, Blue, Red or White (Single Color Only) Magnetic Mount	631.00
	L31HAMCA	Amber, Magnetic Mount, CA Title 13 Compliant	631.00
	L31H*V	Amber, Blue, Red or White (Single Color Only) Magnetic/Suction Cup Mount	638.00
	L31HAVCA	Amber, Vacuum/Magnetic Mount, CA Title 13 Compliant	638.00
	L31HRFN	Red, Meets NFPA Zone C Upper Requirements, Each	599.00
	MIRROR20	Mirror Mount Bracket for L31 / L32 / L21 / L22 / L50 / L10 Series Beacons	53.00
	BBKT30	Shelf Mount Bracket for L31/L32 Series, Stainless Steel, Mounts to Flat Vertical Surface	53.00
	L360PMKT	Pipe Mount Kit for L31/32 Flat Mount	39.00
	L360BGB	Branch Guard Kit for L31H Series	179.00

L32 Series Super-LED® Beacon, Class 1 in Amber and Class 2 in Red & Blue, Low Dome - Cast Aluminum Base, Includes Scan-Lock™, Hi/Low Power, Cruise and Synchronize Features.

	L32L*F	Amber, Blue, Red or White (Single Color Only) Flat Mount	375.00
††	L32L*F4	Amber, Blue or Red (Single Color Only) Flat Mount, 24 VDC	375.00
	L32L*M	Amber, Blue, Red or White (Single Color Only) Magnetic Mount	405.00
	L32L*V	Amber, Blue, Red or White (Single Color Only) Magnetic/Suction Cup Mount	412.00
	MIRROR20	Mirror Mount Bracket for L31 / L32 / L21 / L22 / L50 / L10 Series Beacons	53.00
	BBKT30	Shelf Mount Bracket for L31/L32 Series, Stainless Steel, Mounts to Flat Vertical Surface	53.00

All models are 12 Volt D.C. only unless otherwise noted above. For other voltages contact factory.
***** Replace symbol in model number with letter indicating lens color or LED color desired: **A** = Amber; **B** = Blue; **C** = Clear/White; **R** = Red; **G** = Green
# Replace symbol in model number with letter indicating SPLIT lens or LED color desired: **D** = Red/Clear or White; **E** = Blue/Clear or White; **F** = Amber/Clear or White; **H** = Green/Clear or White, **J** = Red/Blue; **K** = Red/Amber; **L** = Red/Green; **M** = Blue/Amber **†** (to be discontinued, check availability) **††** (special order, check availability, non-returnable, non-cancelable)
! Indicate length desired: 5 foot, 6 foot, 7 foot or 8 foot **$** Indicates Lower Price

WHELEN ENGINEERING COMPANY, INC.

AUTOMOTIVE LIST PRICE

No. PL17.0WL EFFECTIVE: December 21, 2016 VOID: June 29, 2017

↓ †† - Special Order, Non-Returnable, Non-Cancelable. See "Made-To-Order" Statement on Table of Contents Page of this Price List.

	MODEL	DESCRIPTION	LIST
	L360PMKT	Pipe Mount Kit for L31/32 Flat Mount	39.00
	L21 Series Super-LED® Encapsulated, Class 1, Polycarbonate Base, Perm Mount Models with Scan-Lock™ Flash Patterns.		
	L21H*P	Amber or White, Perm/Pipe/"J" Hook Mount, High Dome	343.00
	L21H*M	Amber or White, Magnetic Mount, High Dome	365.00
	L21H*V	Amber or White, Magnetic/Suction Cup Mount, High Dome	376.00
††	L21H*P4	Amber or White, Perm/Pipe/"J" Hook Mount, High Dome, 24 VDC	343.00
	L21L*P	Amber or White, Perm/Pipe/"J" Hook Mount, Low Dome	343.00
	L21L*M	Amber or White, Magnetic Mount, Low Dome	365.00
	L21L*V	Amber or White, Magnetic/Suction Cup Mount, Low Dome	376.00
††	L21L*P4	Amber or White, Perm/Pipe/"J" Hook Mount, Low Dome, 24 VDC	343.00
	MIRROR20	Mirror Mount Bracket for L31 / L32 / L21 / L22 / L10 Series Beacons	53.00
	BBKT20	Shelf Mount Bracket for L21 / L22 / L10 Series Beacons, Stainless Steel, Mounts to Flat Vertical Surface	53.00
	BGL	Branch Guard for Low Dome for L21 / L22 / L10 Series Beacons	39.00
	BGH	Branch Guard, High Dome for L21 / L22 / L10 Series Beacons	41.00
	MMK	90 Lb. Pull Magnetic Mount Kit, with 8' Straight Cord & Plug for L21 / L22 / L10 Series Beacons	31.50
	LSK	Single Lighted Switch (15 Amp Rated), Mounted on Bracket, Wired and Fused	42.00
	DH2000*	Replacement High Dome for L21 / L22 / L10 Series Beacons	74.00
	DL2000*	Replacement Low Dome for L21 / L22 / L10 Series Beacons	74.00

	L22 Series Super-LED®, Single Color Encapsulated Beacon, Class 2 Amber - Polycarbonate Base, Includes Scan-Lock™ Flash Patterns.		
	L22H*P	Amber, Blue, Red or White, Perm/Pipe Mount, High Dome	198.00
	L22H*M	Amber, Blue, Red or White, Magnetic Mount, High Dome	223.00
	L22H*V	Amber, Blue, Red or White, Magnetic/Suction Cup Mount, High Dome	234.00
††	L22H*P4	Amber, Blue, Red or White, Perm/Pipe Mount, 24 VDC, High Dome	198.00
	L22L*P	Amber, Blue, Red or White, Perm/Pipe Mount, Low Dome	198.00
	L22L*M	Amber, Blue, Red or White (Single Color), Magnetic Mount, Low Dome	223.00
	L22L*V	Amber, Blue, Red or White, Magnetic/Suction Cup Mount, Low Dome	234.00
††	L22L*P4	Amber, Blue, Red or White, Perm/Pipe Mount, 24 VDC, Low Dome	198.00
	MIRROR20	Mirror Mount Bracket for L31 / L32 / L21 / L22 / L50 / L10 Series Beacons	53.00
	BBKT20	Shelf Mount Bracket for L21 / L22 / L10 Series Beacons, Stainless Steel, Mounts to Flat Vertical Surface	53.00
	BGL	Branch Guard for Low Dome for L21 / L22 / L10 Series Beacons	39.00
	BGH	Branch Guard, High Dome for L21 / L22 / L10 Series Beacons	41.00
	MMK	90 Lb. Pull Magnetic Mount Kit, with 8' Straight Cord & Plug for L21 / L22 / L10 Series Beacons	31.50
	LSK	Single Lighted Switch (15 Amp Rated), Mounted on Bracket, Wired and Fused	42.00
	DH2000*	Replacement High Dome for L21 / L22 / L10 Series Beacons	74.00
	DL2000*	Replacement Low Dome for L21 / L22 / L10 Series Beacons	74.00

	L10 Series Super-LED® Beacon, Class 1 Amber, with Scan-Lock™ Flash Patterns		
	L10HAP	Amber, High Dome, Perm/Pipe Hook Mount, 12 VDC	164.00
	L10HCP	Clear, High Dome, Perm/Pipe Mount, 12 VDC	164.00
††	L10HAP4	Amber, High Dome, Perm/Pipe Hook Mount, 24 VDC	164.00
	L10HAM	Amber, High Dome, Magnetic Mount, 12 VDC	182.00
	L10HAV	Amber, High Dome, Magnetic/Suction Mount, 12 VDC	182.00
	L10LAP	Amber, Low Dome, Perm/Pipe Hook Mount, 12 VDC	164.00
	L10LCP	Clear, Low Dome, Perm/Pipe Mount, 12 VDC	164.00
††	L10LAP4	Amber, Low Dome, Perm/Pipe Hook Mount, 24 VDC	164.00
	L10LAM	Amber, Low Dome, Magnetic Mount, 12 VDC	182.00
	L10LAV	Amber, Low Dome, Magnetic/Suction Mount, 12 VDC	182.00
	L10H#P	Amber/White or Amber/Blue Dual Color with Individual Control, Scan-Lock™ Flash Pattern and Synchronize Feature. Perm/Pipe Hook Mount, 12 VDC, High Dome	225.00
	L10L#P	Amber/White or Amber/Blue Dual Color with Individual Control, Scan-Lock™ Flash Pattern and Synchronize Feature. Perm/Pipe Hook Mount, 12 VDC, Low Dome	225.00
	MIRROR20	Mirror Mount Bracket for L31 / L32 / L21 / L22 / L50 / L10 Series Beacons	53.00
	BBKT20	Shelf Mount Bracket for L21 / L22 / L10 Series Beacons, Stainless Steel, Mounts to Flat Vertical Surface	53.00
	BGL	Branch Guard for Low Dome for L21 / L22 / L10 Series Beacons	39.00
	BGH	Branch Guard, High Dome for L21 / L22 / L10 Series Beacons	41.00
	MMK	90 Lb. Pull Magnetic Mount Kit, with 8' Straight Cord & Plug for L21 / L22 / L10 Series Beacons	31.50
	LSK	Single Lighted Switch (15 Amp Rated), Mounted on Bracket, Wired and Fused	42.00
	DH2000*	Replacement High Dome for L21 / L22 / L10 Series Beacons	74.00
	DL2000*	Replacement Low Dome for L21 / L22 / L10 Series Beacons	74.00

	L50 Series Super-LED® Beacon, Polycarbonate Base		
	L51*P	Class 1, Amber or White, Perm/Pipe Mount	342.00
	L51*M	Class 1, Amber or White, Magnetic Mount	359.00
	L53AP	Class 3, Amber, Flat Mount, Single LED Beacon, Scan-Lock™ Flash Patterns including Steady-Burn and Cruise Mode	68.00

	L53AM	Class 3, Amber, Magnetic Mount, Single LED Beacon, Scan-Lock™ Flash Patterns including Steady-Burn and Cruise Mode	84.00
	MIRROR15	Mirror Mount Bracket for L50 Series	55.00

L41 Series Super-LED® Beacon, 12/24 VDC, Class 1, Cast Aluminum Base, Includes Scan-Lock™, Permanent Mount Models with Hi/Low and Synchronization Feature, Red, Blue, Amber or White

	L41*P	Perm/Pipe Mount	320.00
	L41*M	Magnetic Mount	341.00
	L41*V	Magnetic/Suction Mount	351.00
	L40BG	Branch Guard for L41 Series Beacons	39.00

ROTA-BEAM™ Super-LED® R316 Series Beacon, Class 1 High Dome - Cast Aluminum Base, Includes Scan-Lock™, Hi/Low Power, Cruise and Synchronize Features.

	R316*F	Amber, Blue, Red or White (Single Color Only) Flat Mount	828.00
	R316*M	Amber, Blue, Red and/or White (Single Color Only) Magnetic Mount	859.00
	R316*V	Amber, Blue, Red or White (Single Color Only) Magnetic/Suction Mount	866.00
	R316**F	Amber, Blue, Red and/or White (Two Color, Split Front/Rear) Flat Mount, Clear Dome	828.00
	R316**M	Amber, Blue, Red and/or White (Two Color, Split Front/Rear) Magnetic Mount, Clear Dome	859.00
	R316**V	Amber, Blue, Red and/or White (Two Color, Split Front/Rear) Magnetic/Suction Mount, Clear Dome	866.00
	RPHOTO	Photocell Option for Hi/Low Power	45.00

ROTA-BEAM™ Super-LED® R416 Series Beacon, Class 1 - Cast Aluminum Base, Includes Scan-Lock™, Hi/Low Power, Cruise and Synchronize Features.

	R416*F	Amber, Blue, Red or White (Single Color Only) Flat Mount	828.00
	R416*M	Amber, Blue, Red or White (Single Color Only) Magnetic Mount	859.00
	R416*V	Amber, Blue, Red or White (Single Color Only) Magnetic/Suction Mount	866.00
	R416**F	Amber, Blue, Red and/or White (Two Color, Split Front/Rear) Flat Mount, Clear Dome	828.00
	R416**M	Amber, Blue, Red or White (Two Color, Split Front/Rear) Magnetic Mount, Clear Dome	859.00
	R416**V	Amber, Blue, Red or White (Two Color, Split Front/Rear) Magnetic/Suction Mount, Clear Dome	866.00
	RPHOTO	Photocell Option for Hi/Low Power	45.00

Flashers, Halogen & LED

Universal® Halogen & LED Flashers

	UFM8	Eight Outlet Halogen/LED Flasher, 60 Watts per Outlet, 2x2x2x2 Switching, 17 Selectable Flash Patterns	191.00
	ULF44	Four Outlet, Four Outlet LED Flasher, 60 Watts per Outlet, More than 60 Scan-Lock™ Flash Patterns, Allowing for Alternating, Simultaneous and Synchronized Flashing Lightheads	91.00
	AFL530	Certified LED Ambulance Flasher, 5 Outlet, 30 Watts	137.00
	AFM560	Certified Ambulance Flasher, 5 Outlet, 60 Watts	245.00
	AFM1660	Certified Ambulance Flasher, 16 Outlet, 60 Watts	245.00

Headlight/Grille, Taillight Flashers & Police Equipment Interface Modules

	SSFPOS	100% Solid-State, Headlight/Grille Light Flasher, 2 Outlet, 160 Watts Per Outlet, 7 Flash Patterns, For Positive Switching Headlights	80.00
	SSFPOSI6	100% Solid-State, Headlight and Taillight Flasher, 2 Outlet, 160 Watts Per Outlet, 7 Flash Patterns, For 2006-2016 Chevy Impala, 2011-2017 Chevy Caprice and 2007-2017 Chevy Tahoe Police Package Vehicles, Includes Mating Plug, For Positive Switching Headlights	107.00
	SSFFP16	Headlight Flasher with 8 Flash Patterns, Plug and Play for 2016-2017 Ford Interceptor Utility (Requires Ford Option 60A, pre-wire option).	129.00
	UHF2150A	Headlight/Grille Light Flasher with 4 Flash Patterns for Positive or Negative Headlight Switching (not for Chevy Impala)	71.00
	PEIMCT13	For 2013 Chevy Tahoe or 2013-2017 Caprice. This module switches the four negative inputs found on the steering wheel switches to positive inputs and has a speed sensor	135.00
	PEIMFI13	For 2013-2017 Ford Police Interceptor Sedan or Utility. This module switches the four negative inputs found on the steering wheel switches to positive inputs and has a speed sensor	135.00

Options for LED Lightheads

	LEDLOAD	In-line "Load" Resistor Kit to Interface with OEM Turn Signal Circuit	68.00
	PROGRAM1	Scan-Lock™ Flash Pattern Programmer	121.00

Lightheads, Super-LED®, LED, Halogen & Combination

Note: In the Model Number the 3rd and 4th Digit are for the LED or Super-LED® Color. The 7th Digit is for the Lens Color.

0S Square Lens Series, Marker/Clearance, Illumination and Flashing LED, Chrome Housing, Size is 1" Wide x 1-1/2" Long.

	0S*00MCR	Amber or Red Marker/Clearance Light with Clear Lens	29.00
	0S*00FCR	Amber or Red with Single Flash and Clear Lens	29.00
	0S*00FCR	Blue or White with Single Flash and Clear Lens	40.00
	0S*00SCR	Amber or Red Steady-Burn and Clear Lens	29.00
	0SB00SCR	Blue Steady-Burn and Clear Lens	40.00
	0SC0EDCR	White Illumination Light with Clear Lens	40.00
	0AC0EDCR	White Illumination Light with Clear Lens and 45° Angled Chrome-Plated Bezel	42.00

2" Round 5mm LED Lightheads, Includes 2.5" Adapter for Customer Supplied 2.5" Grommet, 3" and 3.5" Flange Mount. Other Optional Mounting Kit Purchased Separately (See Optional Mounting Section).

	T0*00M*R	Clearance Light, Amber or Red	36.00
	T0CACCCR	Compartment Light, Intensity Level 3	51.00

All models are 12 Volt D.C. only unless otherwise noted above. For other voltages contact factory.
***** Replace symbol in model number with letter indicating lens color or LED color desired: **A** = Amber; **B** = Blue; **C** = Clear/White; **R** = Red; **G** = Green
# Replace symbol in model number with letter indicating SPLIT lens or LED color desired: **D** = Red/Clear or White; **E** = Blue/Clear or White; **F** = Amber/Clear or White; **H** = Green/Clear or White, **J** = Red/Blue; **K** = Red/Amber; **L** = Red/Green; **M** = Blue/Amber **†** (to be discontinued, check availability) (special order, check availability, non-returnable, non-cancelable)
! Indicate length desired: 5 foot, 6 foot, 7 foot or 8 foot **$** Indicates Lower Price

↓†† - Special Order, Non-Returnable, Non-Cancelable. See "Made-To-Order" Statement on Table of Contents Page of this Price List.

	MODEL	DESCRIPTION	LIST
	Optional Mounting for 2" Round Series		
	TFLANGEB	Flange Kit, Surface Mount, Black	8.70
	TFLANGEC	Flange Kit, Surface Mount, Chrome	16.50
	TGROM2	2" Grommet	7.15
	3" Round Super-LED® Lightheads, Steady-Burn or Flashing.		
	3SC0CDCR	Compartment Light, White	75.00
	3S*00F*R	Flashing, Single Pattern, Red, Blue or Amber	75.00
	3SBCCDCR	Compartment Light, Combination Blue/White, with Independent Control of Blue and White Light	82.00
	3SRCCDCR	Compartment Light, Combination Red/White, with Independent Control of Red and White Light	82.00
	3SR0CDRR	Red, Steady-Burn, Nighttime Illumination Lighting	75.00
	3FLANGEC	Flange Kit, Surface Mount, Chrome	12.50
	3GROMMET	Grommet Mounting Kit	7.15

	3.5" Round Super-LED® Lightheads with Clear Extended Lens, Scan-Lock™ Flash Patterns and Steady Burn, Requires Mounting Purchased Separately.		
	PAR28*	Amber, Blue, Red or White Warning, with Synchronize Feature	186.00
	PAR28J	Split Red/Blue Warning, with Synchronize Feature	196.00
††	PAR28D	Split Red/White Warning, with Synchronize Feature	196.00
††	PAR28E	Split Blue/White Warning, with Synchronize Feature	196.00
††	PAR28D*	Combination Interleaved White Super-LED® Driving Light with Red or Blue Warning Light, Clear Outer Lens	241.00
	PAR28DJ	Combination Interleaved White Super-LED® Driving Light with Blue over Red Warning Light, Clear Outer Lens	251.00
	P28FX11	Optional Fog Light Mounting Kit for 2013-2015 Police Interceptor Utility, Requires Optional Ford OEM Fog Light Hardware and Bracket, Purchased from Ford	8.20

	4" Round Super-LED® Lightheads, Scan-Lock™ Flash Patterns (with Phase 1 and Phase 2) and Steady-Burn, Includes Adapter for PAR36 Applications. Requires Optional Mounting Kit Purchased Separately (Except FE/FD Series).		
	FEDC06*R	2011-2016 Dodge Durango with Fog Light Package, Fog Light Mount with Extended Lens, Synchronizable, Amber, Blue, Red or White. Not for Use with Projector Fog Lights	194.00
	FEDC06JR	2011-2016 Dodge Durango with Fog Light Package, Fog Light Mount with Extended Lens, Synchronizable, Split Red/Blue. Not for Use with Projector Fog Lights	204.00
††	FEDC06DR	2011-2016 Dodge Durango with Fog Light Package, Fog Light Mount with Extended Lens, Synchronizable, Split Red/White. Not for Use with Projector Fog Lights	204.00
††	FEDC06ER	2011-2016 Dodge Durango with Fog Light Package, Fog Light Mount with Extended Lens, Synchronizable, Split Blue/White. Not for Use with Projector Fog Lights	204.00
	FDFP11*R	† 2011-2014 Ford Expedition, 2015-2017 Ford Expedition SSV with Round Fog Lights, Combination Interleaved White Super-LED® Driving Light and Color Warning Light, with Clear Extended Lens, Red or Blue	249.00
	FDFP11JR	† 2011-2014 Ford Expedition, 2015-2017 Ford Expedition SSV with Round Fog Lights, Combination Interleaved White Super-LED® Driving Light and Blue over Red Warning Light, with Clear Extended Lens	260.00
	FEFP11*R	† 2011-2014 Ford Expedition Fog Light Mount with Clear Lens, 2015-2017 Ford Expedition SSV with Round Fog Lights, Synchronizable, Amber, Blue, Red or White	194.00
	FEFP11JR	† 2011-2014 Ford Expedition Fog Light Mount with Clear Lens, 2015-2017 Ford Expedition SSV with Round Fog Lights, Synchronizable, Split Red/Blue	204.00
††	FEFP11DR	2011-2014 Ford Expedition Fog Light Mount with Clear Lens, 2015-2017 Ford Expedition SSV with Round Fog Lights, Synchronizable, Split Red/White	204.00
††	FEFP11ER	2011-2014 Ford Expedition Fog Light Mount with Clear Lens, 2015-2017 Ford Expedition SSV with Round Fog Lights, Synchronizable, Split Blue/White	204.00
	2F*00Z*R	Flat Lens, Synchronizable, Amber, Blue, Red or White	190.00
††	2E*00Z*R	Extended Lens, Synchronizable, Amber, Blue, Red or White	190.00
	2EJ00ZCR	Extended Lens, Synchronizable, Split Red/Blue	200.00
	2ED00ZCR	Extended Lens, Synchronizable, Split Red/White	200.00
	2EE00ZCR	Extended Lens, Synchronizable, Split Blue/White	200.00

	4" Round 5mm LED Lightheads (DIRECTIONAL) Requires Optional Mounting Kit Purchased Separately, See Optional Mounting Section.		
	20R00XRR	5mm LED, Brake/Tail/Turn, Maximum Intensity	101.00
	Optional Mounting for 4" Round Series, Except FEDC06*R and 4" Round Super-LED®, Unless Specified.		
	2FLANGEB	Black Surface Mount Trim Ring Kit (For LED Models Only)	8.70
	2FLANGEC	Chrome Surface Mount Trim Ring Kit (For LED Models Only)	20.00
	2GROMMET	Grommet Mounting Kit (For Super-LED® Models)	7.15
	4" Round, 2G Series Super-LED® 5mm LED Grommet Mount Lightheads		
	2G*00F*R	5mm LED Warning Light with 14 Flash Patterns and Steady-Burn, Red or Amber, Includes Grommet	109.00
	20C0CDCR	Compartment Light, Level 3 Intensity, Optional Mounting Kit Purchased Separately	138.00
	20C0CDCD	Compartment Light, Level 3 Intensity, with Deutsch® Connector, Optional Mounting Kit Purchased Separately	149.00
	2GFLANGC	Optional Surface Mount Chrome-Plated Flange Kit for 2G Series & Compartment Lights	18.50
	2GFLANGB	Optional Surface Mount Black Flange Kit for 2G Series & Compartment Lights	8.70

	2GROMMET	Grommet Mounting Kit for 2G Compartment Lights Only	7.15
	2GBKT1	Optional "L" Bracket, For Use with Grommet Mount Lighthead Only, Each	21.50
	400 Series Linear Super-LED®		
	4V3*	V-Series™, Combination 180° Warning, Take Down and Puddle Light with Scan-Lock™ Warning Flash Patterns, Red, Blue, Amber or White Warning	416.00
	40**5SCR	Amber, Blue, Red and/or White, Six Super-LED® over Six Super-LED® with Individual Controls of Upper and Lower Level. Requires Remote Flasher, Purchased Separately (Not to be used as a Steady-Burn light)	237.00
	40BUV	Super-LED® Back-up Light, Vertical Mount	203.00
	40BUH	Super-LED® Back-up Light, Horizontal Mount	203.00

400 Series Single Level Super-LED®, Includes Scan-Lock™ Flash Patterns (with Phase 1 and Phase 2) and Steady-Burn with Synchronize Feature.

	40*02Z*R	Amber, Blue, Red or White	137.00

400 Series 5mm LED Brake/Tail/Turn, Turn & Back Up, Color LEDs with Color Outer Lens. Requires Optional Mounting Kit Purchased Separately (See Optional Mounting Section).

	40BTT	LED, Brake/Tail/Turn with 2 Flash Patterns	132.00
	40A00AAR	LED, Turn Light Amber	132.00
	40C00VCR	LED, Interior/Back-up Light, Minimum Intensity	189.00

Options for 400 Series

	4EFLANGE	Chrome-Plated Flange Kit (Not for use with Linear-LED® & Super-LED®), Surface Mount 5mm & Single Level Super-LED® Only	16.50
	4FLANGEB	Black Flange Kit (not for use with Linear-LED® & Super-LED®), Surface Mount 5mm & Single Level Super-LED® Only	8.70
	4TSMAB	Black Super-LED® Surface Mount Adapter, Linear-LED® & Super-LED® Only	19.00
	4TSMAC	Chrome-Plated Super-LED® Surface Mount Adapter, Linear-LED® & Super-LED® Only	27.00
	4EGRILP	Grille-Master™ Chrome Housing with Swivel Bracket. Not for use with LED/Halogen Combination Models	75.00
	4EGRILB	Grille-Master™ Black Housing with Swivel Bracket. Not for use with LED/Halogen Combination Models	69.00

500 Series Linear Super-LED® Lightheads, Color LEDs with Color Outer Lens, Split Color Modules with Clear Outer Lens, Scan-Lock® Flash Patterns, Plus Steady-Burn, and Synchronize Feature. Requires Optional Mounting Kit Purchased Separately (See Optional Mounting Section).

	5V3*	V-Series™, Combination 180° Warning, Take Down and Puddle Light Combination with Scan-Lock™ Warning Flash Patterns, Red, Blue, Amber or White Warning	312.00
	5V1*	Combination 180° and TIR Warning, Single Color with Scan-Lock™ Flash Patterns, Red, Blue, Amber or White	306.00
	50*02Z*R	Amber, Blue, Red or White, For Horizontal Mounting	178.00
	50**2ZCR	Split Colors, Amber, Blue and/or Red, For Horizontal Mounting	184.00
††	50AC2ZCR	Split Amber/White, For Horizontal Mounting	184.00
††	50BC2ZCR	Split Blue/White, For Horizontal Mounting	184.00
	50CR2ZCR	Split Red/White, For Horizontal Mounting	184.00
††	50CC2ZCR	Split White/White, For Horizontal Mounting	184.00
	5V*02Z*R	Amber, Blue or Red, For Vertical Mounting	178.00
††	50AA2SA2	Cab Mount Lights with Chrome Flange, Vertical Mount (one per side)	218.00
	50A02SA1	Grommet Mount, Includes Grommet, Lights Used on Rear of Trucks (in an array of 7)	197.00

500 Series TIR6™ Super-LED®, Color LEDs with Color Outer Lens, Split Color Modules with Clear Outer Lens, Six Super-LED®s (per panel). Scan-Lock™ Flash Patterns, including Steady and Synchronize Feature. Requires Optional Mounting Kit Purchased Separately (See Optional Mounting Section).

	50*03Z*R	Amber, Blue, Red or White	167.00
††	50**3ZCR	Split Colors Amber, Blue, Red or White	173.00
††	50AC3ZCR	Split Amber/White	173.00
††	50BC3ZCR	Split Blue/White	173.00
††	50CR3ZCR	Split Red/White	173.00
††	50CC3ZCR	Split White/White	173.00

Options for 500 Series (For all 500 Series Lightheads, Except 5G Surface Mount Models).

	5FLANGEB	Black Trim Ring, Kit	9.20
	5FLANGEC	Chrome-Plated Trim Ring, Kit	16.50
	5FLANGEP	Polished Aluminum Flange	38.50
	5GROMMET	Grommet Mount Kit	9.20
	5GBKT1	Optional "L" Bracket for use with Grommet Mount Lighthead Only, Each	20.50
	5TSMAB	Black Surface Mount Adapter, TIR6™ Super-LED® Only	8.70
	5TSMAC	Chrome-Plated Surface Mount Adapter, TIR6™ Super-LED® Only	16.50
	5LSMAB	Black Surface Mount Adapter for Linear Super-LED® Only	16.50
	5LSMAC	Chrome-Plated Surface Mount Adapter for Linear Super-LED® Only	27.00
	5BRUSH	Aluminum Brush Guard, Includes Surface Mount Adapter for TIR6™ Super-LED® Series, 5mm Requires Optional Flange Purchased Separately	28.50
	5BKT1	Mounting Bracket for 500 Series Super-LED®, Universal Mounting Bracket	14.50
	5GM2LRC	Chrome-Plated Grille Mount for 2015-2017 Freightliner M2 106, Pair	89.00
	5IM2LRC	Chrome-Plated Fender Mount for 2015-2017 Freightliner M2 106, Pair	89.00

All models are 12 Volt D.C. only unless otherwise noted above. For other voltages contact factory.
***** Replace symbol in model number with letter indicating lens color or LED color desired: **A** = Amber; **B** = Blue; **C** = Clear/White; **R** = Red; **G** = Green
# Replace symbol in model number with letter indicating SPLIT lens or LED color desired: **D** = Red/Clear or White; **E** = Blue/Clear or White; **F** = Amber/Clear or White; **H** = Green/Clear or White, **J** = Red/Blue; **K** = Red/Amber; **L** = Red/Green; **M** = Blue/Amber **†** (to be discontinued, check availability) **††** (special order, check availability, non-returnable, non-cancelable)
! Indicate length desired: 5 foot, 6 foot, 7 foot or 8 foot **$** Indicates Lower Price

↓ †† - Special Order, Non-Returnable, Non-Cancelable. See "Made-To-Order" Statement on Table of Contents Page of this Price List.

	MODEL	DESCRIPTION	LIST
		5G Series Super-LED® and LED Grommet Mount Lightheads	
	5G*00F*R	5mm LED Warning Light, Amber or Red with 14 Flash Patterns	99.00
	5GC0CCCR	Compartment Light, White Super-LED® with Clear Lens	81.00
	5GC00WCR	5mm LED Back-up Light, White	117.00
	5GFLANGC	Optional Surface Mount Chrome-Plated Flange Kit for 5G Series	21.50
	5GFLANGB	Optional Surface Mount Black Flange Kit for 5G Series	8.70
	5GBKT1	Optional "L" Bracket, For Use with Grommet Mount Lighthead Only, Each	20.50
	5GBOXB	**NEW** Optional 5G Box, Black	59.00

600 Series Super-LED® Lightheads, Surface Mount, Color LEDs with Color Outer Lens (Unless Specified). Requires Optional Mounting Kit Purchased Separately (See Optional Mounting Section).

	6RB*	ROTA-BEAM™ Amber, Blue, Red or White, Color Lens	416.00
	6RB*C	ROTA-BEAM™ Amber, Blue or Red, Clear Lens	416.00
	60*02S*R	Amber, Blue, Red or White, without Flange, Requires LED Flasher Purchased Separately	194.00
	60*02F*R	Amber, Blue, Red or White, Includes Internal Flasher with Flash Patterns, Steady-Burn and Hi/Low Power	194.00
††	60RA6FCR	1/2 Red, 1/2 Amber, Side-By-Side with Clear Outer Lens with 20 Scan-Lock™ Flash Patterns and Independent On/Off Control of Each Side	239.00
	60BR6FCR	1/2 Red, 1/2 Blue, Side-By-Side with Clear Outer Lens with 20 Scan-Lock™ Flash Patterns and Independent On/Off Control of Each Side	239.00
	60RC6FCR	1/2 Red, 1/2 White, Side-By-Side with Clear Outer Lens with 20 Scan-Lock™ Flash Patterns and Independent On/Off Control of Each Side	239.00
	60C0ELZR	Gradient Opti-Scenelight™, Recess Mount	342.00
	6SC0ENZR	Gradient Opti-Scenelight™, Surface Mount	309.00

600 Series 5mm LED Brake/Tail, Turn, & Back-Up Lightheads, Surface Mount, Color LEDs with Color Outer Lens. Requires Optional Mounting Kit Purchased Separately (See Optional Mounting Section).

	60A00TAR	Amber Turn Signal, Populated Arrow Shape without Flange, with Multiple Flash Patterns	143.00
	60BTT	LED, Brake/Tail/Turn with 2 Flash Patterns	195.00
	60C00VCR	Interior/Back-up Light, Minimum Intensity	143.00
	60C00WCR	Interior/Back-up Light, Maximum Intensity	512.00

600 Series Snap-In Halogen Lightheads, Requires Optional Mounting Kit Purchased Separately (See Optional Mounting Section) Consider Applicable 600 or M6 Super-LED® Lightheads.

	60F000*R	Without Flange	160.00
	60K000XR	26 Degree Opti-Scenelight™, without Flange	168.00
	60K000YR	13 Degree Opti-Scenelight™, without Flange	168.00
	60J000CR	Back-up Light without Flange	129.00
	60X000RR	Brake/Tail/Turn	138.00
	60X000TR	Amber Arrow, without Flange	142.00

Options for 600 Series

	64FKIT	Mounting Kit to Convert 600 Series to Fit in Old-Style 64 Series Hole Cutouts	5.10
	6FLANGEB	Black Flange Kit for 600 Series	8.70
	6EFLANGE	Chrome-Plated Flange Kit for 600 Series	20.50
	6EHDLTMK	Headlight Mounting Kit for ATI & KD Housing, Includes Bracket & Hardware (Lighthead Purchased Separately)	31.50
	PLAST3V	Flange, Chrome-Plated Three Light Vertical (Lightheads Purchased Separately)	165.00
	PLAST4V	Flange, Chrome-Plated Four Light Vertical (Lightheads Purchased Separately)	231.00
	PLAST4VL	Flange, Chrome-Plated Four Light Vertical, 5mm LED and Super-LED® Only (Lightheads Purchased Seperately)	109.00
	CAST3	Polished Aluminum Housing for Vertical Mounting, 3 Lamp	245.00
	CAST3H	Polished Aluminum Housing for Horizontal Mounting, 3 Lamp	272.00
	CAST4V	Polished Aluminum Housing for Vertical Mounting, 4 Lamp	373.00

700 Series Super-LED® Lightheads, Surface Mount, Color LEDs with Color Outer Lens (Unless Specified). Requires Optional Mounting Kit Purchased Separately (See Optional Mounting Section).

	70*02S*R	Amber, Blue, Red or White, without Flange, Requires LED Flasher Purchased Separately	194.00
	70*02F*R	Amber, Blue, Red or White, Includes Internal Flasher with Flash Patterns, Steady-Burn and Hi/Low Power	194.00
††	70RA6FCR	1/2 Red, 1/2 Amber, Side By Side with Clear Outer Lens with 20 Scan-Lock™ Flash Patterns and Independent On/Off Control of Each Side	239.00
	70BR6FCR	1/2 Red, 1/2 Blue, Side By Side with Clear Outer Lens with 20 Scan-Lock™ Flash Patterns and Independent On/Off Control of Each Side	239.00
	70RC6FCR	1/2 Red, 1/2 White, Side By Side with Clear Outer Lens with 20 Scan-Lock™ Flash Patterns and Independent On/Off Control of Each Side	239.00
	70C0ELZR	Gradient Opti-Scenelight™, Recess Mount	342.00
	7SC0ENZR	Gradient Opti-Scenelight™, Surface Mount	309.00
	70CREGCS	Ambulance Interior Light, Red/White with Built-In Individual Switches	297.00

700 Series 5mm LED Brake/Tail/Turn & Back-Up Lightheads, Surface Mount, Color LEDs with Color Outer Lens. Requires Optional Mounting Kit Purchased Separately (See Optional Mounting Section).

	70BTT	LED, Brake/Tail/Turn with 2 Flash Patterns	167.00
	70C00VCR	Interior/Back-up Light, Minimum Intensity	195.00

	70C00WCR	Interior/Back-up Light, Maximum Intensity	436.00
	70A00TAR	Amber Turn Signal, Sequential Chevron Arrow without Flange with Multi-Flash Pattern	132.00

700 Series Snap-In Halogen Lightheads, Requires Optional Mounting Kit Purchased Separately (See Optional Mounting Section). Consider Applicable 700 or M7 Super-LED® Lightheads.

	70F000*R	Without Flange	148.00
	70K000ZR	8-32 Degree Opti-Scenelight™, without Flange	155.00

Options for 700 Series

	7FLANGEB	Black Flange Kit	9.20
	7EFLANGE	Chrome-Plated Flange Kit	17.50
	7CAST3	Polished Cast Aluminum Housing, 3 Lamps	228.00
	73FKIT	Mounting Kit to convert 700 Series to fit in Old Style 73 Series Hole Cutouts	6.15
††	7GCV6LRC	Grille Mount Chrome Housing for 2006-2015 Chevy Express Van, Super-LED® & 5mm, Surface Mount, Pair	76.00
	7PT5R	Rear Light Pod for Six 700 Series Lightheads for the 2015-2017 Ford Transit Medium or High Roof, Lightheads Purchased Separately, Freight Surcharge May Apply	560.00
	7PTM5F	Front Light Pod for Six 700 Series Lightheads for the 2015-2017 Ford Transit Medium Roof, Lightheads Purchased Separately, Freight Surcharge May Apply	560.00
	7PTH5F	Front Light Pod for Six 700 Series Lightheads for the 2015-2017 Ford Transit High Roof, Lightheads Purchased Separately, Freight Surcharge May Apply	560.00
	7HTM5FC	Chrome-Plated Housings, Sold in Pairs for Front Driver and Passenger Side of the 2015-2017 Ford Transit Medium Roof, Four 700 Series Lightheads Purchased Separately	282.00
	7HTM5RC	Chrome-Plated Housings, Sold in Pairs for Rear Driver and Passenger Side of the 2015-2017 Ford Transit Medium Roof, Four 700 Series Lightheads Purchased Separately	282.00
	7HTH5FC	Chrome-Plated Housings, Sold in Pairs for Front Driver and Passenger Side of the 2015-2017 Ford Transit High Roof, Four 700 Series Lightheads Purchased Separately	282.00
	7HTH5RC	Chrome-Plated Housings, Sold in Pairs for Rear Driver and Passenger Side of the 2015-2017 Ford Transit High Roof, Four 700 Series Lightheads Purchased Separately	282.00

810 Series - Relampable Halogen Lightheads, Surface Mount (Less Cable)

	810CA0ZR	8-32 Degree Halogen Scenelight	242.00
	810TRIM	Chrome-Plated Flange Cover	25.50

900 Series Super-LED® Lightheads, Surface Mount (Unless Specified), Color LEDs with Color Outer Lens (Unless Specified). Requires Optional Mounting Flange 90FLANGC & 90FLANGB Purchased Separately.

	90**5S*R	Amber, Blue, Red or White (Single Color Only), without Flange, Requires LED Flasher Purchased Separately	309.00
	90**5F*R	Amber, Blue, Red or White (Single Color Only), Includes Internal Flasher with Flash Patterns, Steady-Burn and Hi/Low Power	309.00
	90RA5FCR	1/2 Red, 1/2 Amber, Over/Under with Clear Outer Lens with Scan-Lock™ Flash Patterns, Independent On/Off Control of Each Level and Hi/Low Power	309.00
	90RB5FCR	1/2 Red, 1/2 Blue, Over/Under with Clear Outer Lens with Scan-Lock™ Flash Patterns, Independent On/Off Control of Each Level and Hi/Low Power	309.00
	90RC5FCR	1/2 Red, 1/2 White, Over/Under with Clear Outer Lens with Scan-Lock™ Flash Patterns, Independent On/Off Control of Each Level and Hi/Low Power	309.00
	9SC0ENZR	Gradient Opti-Scenelight™, Surface Mount, Includes Flange	546.00
	90FLANGB	Black Flange Kit for 900 Series Super-LED® Only	12.50
	90FLANGC	Chrome-Plated Flange Kit for 900 Series Super-LED® Only	25.50

900 Series 5mm LED Brake/Tail & Turn, Lightheads, Surface Mount, Color LEDs with Color Outer Lens. Requires Optional Mounting Purchased Separately (See Optional Mounting Section).

	90A00TAR	Turn Signal, Populated Arrow Shape without Flange, with 17 Flash Patterns, Amber, Left/Right Arrow	260.00
	90BTT	LED, Brake/Tail/Turn with 2 Flash Patterns	389.00

900 Series Snap-In Halogen Lightheads, Optional Mounting Kit Purchased Separately (See Optional Mounting Section). Consider Applicable 900 or M9 Super-LED® Lightheads.

††	90F000*R	Without Flange	142.00
	90E000ZR	Gradient Opti-Scenelight™	181.00
	90J000CR	27 Watt Back-Up Light, without Flange	130.00

Options for 900 Series (Except for Super-LED®)

	9FLANGEB	Black Flange Kit for 900 Series (Not for Use With 900 Super-LED® Series)	12.50
	9EFLANGE	Chrome-Plated Flange Kit for 900 Series (Not for Use With 900 Super-LED® Series)	25.50
	97FKIT	Mounting Kit to Convert 900 Series to Fit in Old Style 97 Series Hole Cutouts	7.15

Fluorent Plus™ Series Super-LED™ Compartment Tube Lighting, Includes Both "C" Clip and "P" Clip Mounting.

	F09PC	9", Non-Frosted Lens	90.00
	F18PC	18", Non-Frosted Lens	131.00
	F27PC	27", Non-Frosted Lens	174.00
	F36PC	36", Non-Frosted Lens	229.00
	F45PC	45", Non-Frosted Lens	281.00
	F54PC	54", Non-Frosted Lens	346.00
	F63PC	63", Non-Frosted Lens	399.00

Interior Light, 6" Round, Low Profile, Surface Mount Super-LED® Interior Light

	60C0EHCR	Super-LED® Ambulance Interior Light. 6" Round Surface Mount	204.00
	60C0EJCS	6 Diode Interior Light, White, Includes Switch	185.00
	60CREGCS	12 Diode Interior Light, Split Red/White, 6" Round Surface Mount, Includes Switches	204.00

All models are 12 Volt D.C. only unless otherwise noted above. For other voltages contact factory.
***** Replace symbol in model number with letter indicating lens color or LED color desired: **A** = Amber; **B** = Blue; **C** = Clear/White; **R** = Red; **G** = Green
# Replace symbol in model number with letter indicating SPLIT lens or LED color desired: **D** = Red/Clear or White; **E** = Blue/Clear or White; **F** = Amber/Clear or White; **H** White, **J** = Red/Blue; **K** = Red/Amber; **L** = Red/Green; **M** = Blue/Amber **†** (to be discontinued, check availability) (special order, check availability, non-returnable,
! Indicate length desired: 5 foot, 6 foot, 7 foot or 8 foot **$** Indicates Lower Price

↓ - Special Order, Non-Returnable, Non-Cancelable. See "Made-To-Order" Statement on Table of Contents Page of this Price List.

MODEL	DESCRIPTION	LIST
60CBEGCS	12 Diode Interior Light, Split White/Blue, 6" Round Surface Mount, Includes Switches	204.00
Interior Light, 8" Round, Super-LED® Ambulance Interior Lighthead		
80C0EHCR	Super-LED® Ambulance Interior Light. Fits Industry Standard 8" Cutout	168.00
80C00EZR	Super-LED® Ambulance Interior Light. Fits Industry Standard 8" Cutout, No Mounting Hardware Required, Chrome Housing	168.00
8WC00EZR	Super-LED® Ambulance Interior Light. Fits Industry Standard 8" Cutout, No Mounting Hardware Required, White Housing	157.00
80CBEHCR	9 Diode, Super-LED® Interior Light, 6 White with Hi/Low and 3 Blue	332.00
80CREHCR	9 Diode, Super-LED® Interior Light, 6 White with Hi/Low and 3 Red	332.00
Interior Lights (Less Cable)		
70CREGCS	Ambulance Interior Light, Red/White with Built-In Individual Switches	297.00
86CE1	12 Diode, Super-LED® 8" x 6" Interior Light, White	428.00
CL25C	Round Compartment Light, Clear, 25 Watt Halogen, Surface Mount	77.00
ION™ Series Super-LED® Universal Light, Includes Universal Mount, Scan-Lock™ Flash Patterns and a 4-Wire Pigtail. (For Chrome or White Housings, Contact Factory for Price, Availability and Minimum Order Requirements).		
ION*	Red, Blue, Amber or White, Black Housing	180.00
ION#	Split Color, Clear Lens, Amber/Blue, Amber/White, Red/Blue or Red/White Only, Black Housing	180.00
XON*	Red, Blue, Amber or White, Black Housing with Smoked Lens	190.00
XON#	Split Color, Amber/Blue, Red/Blue & Red/White Only, Black Housing with Smoked Lens	190.00
ION™ Surface Mount Series Super-LED®, Includes Scan-Lock™ Flash Patterns and a 4-Wire Pigtail. (For Chrome or White Housings, Contact Factory for Price, Availability and Minimum Order Requirements).		
IONSM*	Red, Blue, Amber or White, Black Housing	180.00
IONSM#	Split Color, Clear Lens, Amber/Blue, Amber/White, Red/Blue or Red/White Only, Black Housing	180.00
XONSM*	Red, Blue, Amber or White, Black Housing with Smoked Lens	190.00
XONSM#	Split Amber/Blue, Red/Blue or Red/White, Black Housing with Smoked Lens	190.00
ION™ DUO™ Series Linear-LED® Universal Light, Includes Universal Mount, Scan-Lock™ Flash Patterns and a 5-Wire Pigtail. (For Chrome or White Housings, Contact Factory for Price, Availability and Minimum Order Requirements).		
I2#	Red/Blue, Amber/White, Blue/White, Red/White or Blue/Amber Only, Individual Control of each Color, Black Housing	203.00
XI2#	Red/Blue, Amber/White, Blue/White, Red/White or Blue/Amber Only, Individual Control of each Color, Black Housing with Smoked Lens	214.00
ION™ DUO™ Surface Mount Series Linear-LED®, Scan-Lock™ Flash Patterns and a 5-Wire Pig Tail. (For Chrome or White Housings, Contact Factory for Price, Availability and Minimum Order Requirements)		
I2SM#	Red/Blue, Amber/White, Blue/White, Red/White or Blue/Amber Only, Individual Control of each Color, Black Housing	203.00
XI2SM#	Red/Blue, Amber/White, Blue/White, Red/White or Blue/Amber Only, Individual Control of each Color, Black Housing with Smoked Lens	214.00
ION™ TRIO™ Series Linear-LED® Universal Light, Universal Light, Includes Universal Mount, Scan-Lock™ Flash Patterns and a 6-Wire Pigtail. (For Chrome or White Housings, Contact Factory for Price, Availability and Minimum Order Requirements).		
I3JC	Red/Blue/White, With White Override, Black Housing	234.00
I3JA	Red/Blue/Amber, With Amber Override, Black Housing	234.00
I3KC	Red/Amber/White, With White Override, Black Housing	234.00
I3MC	Blue/Amber/White, With White Override, Black Housing	234.00
XI3JC	Red/Blue/White, With White Override, Black Housing with Smoked Lens	244.00
XI3JA	Red/Blue/Amber, With Amber Override, Black Housing with Smoked Lens	244.00
XI3KC	Red/Amber/White, With White Override, Black Housing with Smoked Lens	244.00
XI3MC	Blue/Amber/White, With White Override, Black Housing with Smoked Lens	244.00
ION™ TRIO™ Surface Mount Series Linear-LED®, Scan-Lock™ Flash Patterns and a 6-Wire Pig Tail. (For Chrome or White Housings, Contact Factory for Price, Availability and Minimum Order Requirements)		
I3SMJC	Red/Blue/White, With White Override, Black Housing	234.00
I3SMJA	Red/Blue/Amber, With Amber Override, Black Housing	234.00
I3SMKC	Red/Amber/White, With White Override, Black Housing	234.00
I3SMMC	Blue/Amber/White, With White Override, Black Housing	234.00
XI3SMJC	Red/Blue/White, With White Override, Black Housing with Smoked Lens	244.00
XI3SMJA	Red/Blue/Amber, With Amber Override, Black Housing with Smoked Lens	244.00
XI3SMKC	Red/Amber/White, With White Override, Black Housing with Smoked Lens	244.00
XI3SMMC	Blue/Amber/White, With White Override, Black Housing with Smoked Lens	244.00
ION™ Wide Angle Series Super-LED® Universal Light, Includes Universal Mount, Scan-Lock Flash Patterns and a 4-Wire Pigtail. (For Chrome or White Housings, Contact Factory for Price, Availability and Minimum Order Requirements).		
WION*	Wide Angle, Red, Blue, Amber or White, Black Housing	180.00
WION#	Wide Angle, Split Color, Clear Lens, Amber/Blue, Amber/White, Red/Blue or Red/White Only, Black Housing	180.00
WXON*	Wide Angle, Red, Blue, Amber or White, Black Housing with Smoked Lens	190.00
WXON#	Wide Angle, Split Color, Amber/Blue, Amber/White, Red/Blue or Red/White Only, Black Housing with Smoked Lens	190.00
ION™ Wide Angle Surface Mount Series Super-LED®, Includes Scan-Lock Flash Patterns and a 4-Wire Pigtail. (For Chrome or White Housings, Contact Factory for Price, Availability and Minimum Order Requirements).		
WIONSM*	Wide Angle, Red, Blue, Amber or White, Black Housing	180.00

	WIONSM#	Wide Angle, Split Color, Clear Lens, Amber/Blue, Amber/White, Red/Blue or Red/White Only, Black Housing	180.00
	WXONSM*	Wide Angle, Red, Blue, Amber or White, Black Housing with Smoked Lens	190.00
	WXONSM#	Wide Angle, Split Color, Amber/Blue, Red/Blue or Red/White Only, Black Housing with Smoked Lens	190.00

ION™ V-Series™ Super-LED® Universal Light, 180° Warning, Take Down and Puddle Light

	IONV3*	Universal Mount ION™ with Combination 180° Warning, Take Down and Puddle Light, Red, Blue, Amber or White Warning, Black Housing.	271.00
	IONV3*W	Universal Mount ION™ with Combination 180° Warning, Take Down and Puddle Light, Red, Blue, Amber or White Warning, White Housing.	271.00
	IONV1*	Universal Mount ION™, with Combination 180° and TIR Warning, Single Color, Red, Blue, Amber or White, Black Housing	266.00
	IONV1*W	Universal Mount ION™, with Combination 180° and TIR Warning, Single Color, Red, Blue, Amber or White, White Housing	266.00
	XONV3*	Universal Mount ION™ with Combination 180° Warning, Take Down and Puddle Light, Red, Blue, Amber or White Warning, Black Housing with Smoked Lens	281.00
	XONV1*	Universal Mount ION™, with Combination 180° and TIR Warning, Single Color, Red, Blue, Amber or White, Black Housing with Smoked Lens	276.00

ION™ V-Series™ Super-LED® Surface Mount Lighthead, 180° Warning, Take Down and Puddle Light

	IONSV3*	Surface Mount ION™ with Combination 180° Warning, Take Down and Puddle Light, Red, Blue, Amber or White Warning, Black Housing.	271.00
	IONSV3*W	Surface Mount ION™ with Combination 180° Warning, Take Down and Puddle Light, Red, Blue, Amber, or White Warning, White Housing	271.00
	IONSV3*C	Surface Mount ION™ with Combination 180° Warning, Take Down and Puddle Light, Red, Blue, Amber or White Warning, Chrome Housing	291.00
	IONSV1*	Surface Mount ION™, with Combination 180° and TIR Warning, Single Color, Red, Blue, Amber or White, Black Housing	266.00
	IONSV1*W	Surface Mount ION™, with Combination 180° and TIR Warning, Single Color, Red, Blue, Amber or White, White Housing	266.00
	IONSV1*C	Surface Mount ION™, with Combination 180° and TIR Warning, Single Color, Red, Blue, Amber or White, Chrome Housing	286.00
	XONSV3*	Surface Mount ION™ with Combination 180° Warning, Take Down and Puddle Light, Red, Blue, Amber or White Warning, Black Housing with Smoked Lens	281.00
	XONSV1*	Surface Mount ION™, with Combination 180° and TIR Warning, Single Color, Red, Blue, Amber or White, Black Housing with Smoked Lens	276.00

Options for ION™, ION™ Wide Angle and ION™ V-Series™ Universal Lights, (For Chrome or White Housings, Contact Factory for Price, Availability and Minimum Order Requirements).

	IONK1B	Optional Swivel Mount Bracket, Black	32.50
	IONGROM	Grommet Mount Kit	7.15
	IONPEDB	Pedestal Mount Kit, Black	69.00
	IONBKT1	Optional Universal License Plate Bracket for 2 ION™ Lightheads, Horizontal Mount. Not for Use with ION™ V-Series™	32.50
	IONBKT2	Optional Rear Hatch Mounting Brackets (pair) for 2013-2017 Ford Police Interceptor Utility, Requires Six ION™ Series Lightheads Purchased Separately.	74.00
	IONBKT4	Optional Rear Hatch Brackets (pair) for 2013-2017 Ford Police Interceptor Utility, Requires Two ION™ Series Lightheads Purchased Separately	25.50
	IONBKT5	Universal Mount, Reversed, allows access to mounting screws without removing the light	12.50
	IONBKT6	Optional Rear Hatch Mounting Brackets (pair) for 2015-2017 Chevy Tahoe, Requires Two ION™ Series Lightheads purchased Separately	46.00
	IONBKT7	Optional Grille Mount Brackets (pair) for 2015-2016 Chevy Tahoe, Requires Four ION™ Series Lightheads Purchased Separately	29.00

ION™ T-Series™ Linear Super-LED®, Surface Mount Lighthead, Includes Clear Lens, Black Flange and Scan-Lock™ Flash Patterns, (Replaces TION Series Lightheads).

	TLI*	**NEW** Red, Blue, Amber or White	170.00
	TLI#	**NEW** Split Color, Amber/Blue, Amber/White, Blue/White, Red/Blue or Red/White Only	170.00
	TLI2#	**NEW** DUO™ Color, Amber/Blue, Amber/White, Blue/White, Red/Blue or Red/White Only	190.00
	TLI*X	**NEW** Red, Blue, Amber or White with Smoked Lens	180.00
	TLI#X	**NEW** Split Color, Amber/Blue, Amber/White, Blue/White, Red/Blue or Red/White Only with Smoked Lens	180.00
	TLI2#X	**NEW** DUO™ Color, Amber/Blue, Amber/White, Blue/White, Red/Blue or Red/White Only with Smoked Lens	200.00
	TIONFC	Flange, Chrome	16.50
	TIONBKT1	Optional Universal "L" Mounting Bracket for One TLI™ Lighthead	12.50
	TIONBKT2	Optional Universal Adjustable License Plate Bracket for Two TLI™ Lightheads	32.50
	TIONBKT3	Optional Universal "L" Mounting Bracket for Two TLI™ Lightheads	20.00
	TIONBKT4	**NEW** Optional Universal Over/Under "L" Mounting Bracket for Two TLI™ Lightheads	20.00

M2 Series Super-LED® Surface Mount, Color Outer Lens, Unless Specified. Optional Mounting Flange. 3-5/8" Long x 2-1/8" High x Protrudes 1"

	M2*	Warning, Red, Blue, Amber or White	174.00
	M2*C	Warning, Red, Blue or Amber with Clear Lens	174.00
	M2#	Warning, Split Color with Clear Lens, Red/Amber, Red/White, Red/Blue or Amber/White Only	179.00

All models are 12 Volt D.C. only unless otherwise noted above. For other voltages contact factory.
***** Replace symbol in model number with letter indicating lens color or LED color desired: **A** = Amber; **B** = Blue; **C** = Clear/White; **R** = Red; **G** = Green
# Replace symbol in model number with letter indicating SPLIT lens or LED color desired: **D** = Red/Clear or White; **E** = Blue/Clear or White; **F** = Amber/Clear or White; **H** = Green/Clear or White, **J** = Red/Blue; **K** = Red/Amber; **L** = Red/Green; **M** = Blue/Amber **†** (to be discontinued, check availability) (special order, check availability, non-returnable, non-cancelable)
! Indicate length desired: 5 foot, 6 foot, 7 foot or 8 foot **$** Indicates Lower Price

↓ - Special Order, Non-Returnable, Non-Cancelable. See "Made-To-Order" Statement on Table of Contents Page of this Price List.

MODEL	DESCRIPTION	LIST
M2FC	Flange, Chrome	16.50
M2FB	Flange, Black	9.20
M2GROM	Grommet Mount Kit	8.20
M2PEDB	Pedestal Mount Kit, Black	69.00
M2PEDC	Pedestal Mount Kit, Chrome	75.00

M2 Wide Angle Series Super-LED® Surface Mount, Designed to meet NFPA and KKK specifications, Color Outer Lens, Unless Specified. Optional Mounting Flange

M2W*	Warning, Wide Angle, Red, Blue, Amber or White	174.00
M2W*C	Warning, Wide Angle, Red, Blue or Amber, with Clear Lens	174.00
M2W#	Warning, Wide Angle, Split Color with Clear Lens, Red/Amber or Red/Blue Only	179.00
M2FC	Flange, Chrome	16.50
M2FB	Flange, Black	9.20
M2GROM	Grommet Mount Kit	8.20
M2PEDB	Pedestal Mount Kit, Black	69.00
M2PEDC	Pedestal Mount Kit, Chrome	75.00

M4 Series Linear Super-LED® Surface Mount, Color Outer Lens, Unless Specified. Optional Mounting Flanges Available. 5-1/2" Long x 3-3/8" High, Protrudes 1-3/8".

M4*	Warning, Red, Blue, Amber or White. Internal Flasher with Flash Patterns and Synchronize Feature	188.00
M4*C	Warning, Red, Blue or Amber with Clear Lens. Internal Flasher with Flash Patterns and Synchronize Feature	188.00
M4#	Split Color with Clear Outer Lens, Side-By-Side, Red/Amber, Red/White, Red/Blue or Amber/White Only. Internal Flasher with Flash Patterns and Synchronize Feature	234.00
M4*S	Red, Blue, Amber or White, Requires LED Flasher Purchased Separately	188.00
M4*CS	Red, Blue, Amber or White with Clear Outer Lens, Requires LED Flasher Purchased Separately	188.00
M4V2*	V-Series™ Combination 180° Warning and Perimeter Light, Scan-Lock™ Flash Patterns with Color Outer Lens Over Warning, Red, Blue or Amber Warning	407.00
M4DW*	Combination Driving/Warning Light, Red or Blue Warning with Scan-Lock™ Flash Patterns, Clear Outer Lens	234.00
M4DWJ	Combination Driving/Warning Light, Red Over Blue Warning with Scan-Lock™ Flash Patterns, Clear Outer Lens	234.00
M4FC	Flange, Chrome	16.50
M4FB	Flange, Black	9.20
M4FC400	Flange, Chrome, Adapts M4 to 400 Series Mounting	22.50
M4BRUSH	Brush Guard, Black	45.00
M4CT15B	Fog Light Mount, For 2015-2017 Chevy Tahoe, Pair, Black	71.00
M4TM15B	Mirror Mount for the 2015-2017 Ford Transit, Pair, Black	71.00
M4TB15B	Front Lower Side Mount for the 2015-2017 Ford Transit, Pair, Black	71.00
M4FF15B	Fog Light Mount, Stainless Steel, For 2015-2017 Ford F-150, Pair, Black	89.00

M6 Series Linear Super-LED® Surface Mount, Color Outer Lens, Unless Specified. Optional Mounting Flanges Available. 6-3/4" Long x 4-5/16" High, Protrudes 1-3/8".

M6V2*	V-Series™, Combination 180° Warning and Perimeter Light, Scan-Lock™ Flash Patterns with Color Outer Lens Over the Warning Light, Red, Blue or Amber Warning	601.00
M6V2*C	V-Series™, Combination 180° Warning and Perimeter Light, Scan-Lock™ Flash Patterns with Clear Outer Lens over the Warning Light , Red, Blue or Amber Warning	601.00
M6*	Warning, Red, Blue, Amber or White. Internal Flasher with Flash Patterns and Synchronize Feature	229.00
M6*C	Warning, Red, Blue or Amber with Clear Lens. Internal Flasher with Flash Patterns and Synchronize Feature	229.00
M6#	Split Color with Clear Outer Lens, Side-By-Side, Red/Amber, Red/Blue, Red/White or Amber/White Only. Internal Flasher with Flash Patterns and Synchronize Feature	250.00
M6*S	Red, Blue, Amber or White, Requires LED Flasher Purchased Separately	229.00
M6*CS	Red, Blue, Amber or White with Clear Outer Lens, Requires LED Flasher Purchased Separately	229.00
M6BTT	Brake/Tail/Turn	167.00
M6T	Amber Turn Signal, Sequential Chevron Arrow without Flange with Multi-Flash Pattern	145.00
M6BUW	Back-Up Light	223.00
M6ZC	Gradient Scenelight	386.00
M6FC	Flange, Chrome	16.50
M6FB	Flange, Black	9.20
M6P15C	15° Angled Surface Mount Housing, Chrome	80.00
M6P15B	15° Angled Surface Mount Housing, Black	39.00
M6FC600	Flange, Chrome, Adapts M6 to 600 Series Mounting	25.50
M6BRUSH	Brush Guard, Black	45.00
M6HDLMTK	Headlight Mounting Kit for ATI & KD Housings, Includes Hardware	79.00
M6FCV2	Flange, Chrome, Two Light, Vertical, Lightheads Purchased Separately	113.00
M6FCV3	Flange, Chrome, Three Light, Vertical, Lightheads Purchased Separately	156.00
M6FCV4	Flange, Chrome, Four Light, Vertical, Lightheads Purchased Separately	223.00

	M6PTM5F	Front Light Pod for Eight M6 Lightheads for the 2015-2017 Ford Transit Medium Roof, Lightheads Purchased Separately, Freight Surcharge May Apply	560.00
	M6PT5R	Rear Light Pods (2 Piece) for Six M6 Lightheads for the 2015-2017 Ford Transit Medium or High Roof, Lightheads Purchased Separately, Freight Surcharge May Apply	560.00
	M6PTH5F	Front Light Pod for Eight M6 Series Lightheads for the 2015-2017 Ford Transit High Roof, Lightheads Purchased Separately, Freight Surcharge May Apply	560.00
	M6WLENX	**NEW** Replace Clear Lens with a Smoked Lens, For M6 Warning Models Only	10.50

M7 Series Linear Super-LED® Surface Mount, Color Outer Lens, Unless Specified. Optional Mounting Flanges Available. 7-5/8" Long x 3-3/8" High, Protrudes 1-3/8".

	M7*	Warning, Red, Blue, Amber or White. Internal Flasher with Flash Patterns and Synchronize Feature	229.00
	M7*C	Warning, Red, Blue or Amber with Clear Lens. Internal Flasher with Flash Patterns and Synchronize Feature	229.00
	M7#	Split Color with Clear Outer Lens, Side-By-Side, Red/Amber, Red/White, Red/Blue and Amber/White Only. Internal Flasher with Flash Patterns and Synchronize Feature	250.00
	M7*S	Red, Blue, Amber or White, Requires LED Flasher Purchased Separately	229.00
	M7*CS	Red, Blue, Amber or White with Clear Outer Lens, Requires LED Flasher Purchased Separately	229.00
	M7ZC	Gradient Scenelight	229.00
	M7FC	Flange, Chrome	16.50
	M7FB	Flange, Black	9.20
	M7FC700	Flange, Chrome, Adapts M7 to 700 Series Mounting	35.00
	M7BRUSH	Brush Guard, Black	45.00
	M7BKT1	Optional Universal Mounting Bracket for One Lighthead	19.50
	M7WLENX	**NEW** Replace Clear Lens with a Smoked Lens, For M7 Warning Models Only	10.50

M9 Series Linear Super-LED® Surface Mount, Color Outer Lens, Unless Specified. Optional Mounting Flanges Available. 10-3/8" Long x 6-1/2" High, Protrudes 1-3/8".

	M9V2*	V-Series™, Combination 180° Warning and Scene Light, Scan-Lock™ Flash Patterns with Color Outer Lens Over the Warning Light, Red, Blue or Amber Warning, Includes Chrome-Plated Flange	903.00
	M9V2*C	V-Series™, Combination 180° Warning and Scene Light, Scan-Lock™ Flash Patterns with Clear Outer Lens over the Warning Light, Red, Blue or Amber Warning, Includes Chrome-Plated Flange	903.00
	M9*	Warning, Red, Blue, Amber or White. Internal Flasher with Flash Patterns and Synchronize Feature	343.00
	M9*C	Warning, Red, Blue or Amber with Clear Lens. Internal Flasher with Flash Patterns and Synchronize Feature	343.00
	M9#	Split Color with Clear Outer Lens, Side-By-Side, Red/Amber, Red/Blue & Red/White Only. Internal Flasher with Flash Patterns and Synchronize Feature	343.00
	M9*S	Red, Blue, Amber or White, Requires LED Flasher Purchased Separately	343.00
	M9*CS	Red, Blue, Amber or White with Clear Outer Lens, Requires LED Flasher Purchased Separately	343.00
	M92#	DUO™ Red/Blue, Red/White, Blue/Amber, Blue/White or Amber/White Only, Scan-Lock™ Flash Patterns and Low Power	356.00
	M9*CZ	Combination Warning/Scene Light, Scan-Lock™ Flash Patterns, Synchronize Feature and Hi/Low with Clear Outer Lens	343.00
	M9JCZ	**NEW** DUO™ Red/Blue, Combination Warning/Scene Light, Scan-Lock™ Flash Patterns, Synchronize Feature and Hi/Low with Clear Outer Lens	359.00
	M9LZC	Scenelight, White, Includes Flange	580.00
	M9BTTX	Brake/Tail/Turn	372.00
	M9T	Amber Turn	414.00
	M9BUW	Back-Up Light	433.00
	M9FC	Flange, Chrome	25.50
	M9FB	Flange, Black	9.20
	M9FC900	Flange, Chrome, Adapts M9 Warning to 900 Series Mounting	46.00
	M9FCZ900	Flange Chrome, Adapts M9 Scenelight to 900 Series Mounting	62.00
	M9VFC900	Flange, Chrome, Adapts M9V to 900 Series Mounting	46.00
	M9BRUSH	Brush Guard, Black	71.00
	M9HTM5FC	Chrome-Plated Housings, Sold in Pairs for Front Driver and Passenger Side of the 2015-2017 Ford Transit Medium Roof, Two M9 Series Lightheads Purchased Separately	282.00
	M9HTM5RC	Chrome-Plated Housings, Sold in Pairs for Rear Driver and Passenger Side of the 2015-2017 Ford Transit Medium Roof, Two M9 Series Lightheads Purchased Separately	282.00
	M9HTH5FC	Chrome-Plated Housings, Sold in Pairs for Front Driver and Passenger Side of the 2015-2017 Ford Transit High Roof, Two M9 Series Lightheads Purchased Separately	282.00
	M9HTH5RC	Chrome-Plated Housings, Sold in Pairs for Rear Driver and Passenger Side of the 2015-2017 Ford Transit High Roof, Two M9 Series Lightheads Purchased Separately	282.00

Micro Freedom® Super-LED® Lighthead Assemblies, Mirror Mount Bracket Sold Separately (with 20' Cable).

††	MCFLED2*	Freedom®, Two Linear Super-LED®s with a Built-in Flasher, 8.2"W x 10"D x 3.5"H, Blue, Red and/or Amber	771.00
††	MCSLED2*	Micro LFL Liberty™, Two Linear Super-LED®s with Built-in Flasher, 9.5" L x 12" D x 2.5" H, Blue, Red and/or Amber	663.00

Micron™ Series Super-LED® Lighthead, Includes Scan-Lock™ Flash Patterns, and a 4-Wire Pigtail.

	MCRNS*	Surface Mount, Red, Blue, Amber or White, Black Flange	156.00
	MCRNS#	Surface Mount, Split Color, Clear Lens, Red/Amber, Amber/White, Red/Blue or Red/White Only, Black Flange	162.00

All models are 12 Volt D.C. only unless otherwise noted above. For other voltages contact factory.
***** Replace symbol in model number with letter indicating lens color or LED color desired: **A** = Amber; **B** = Blue; **C** = Clear/White; **R** = Red; **G** = Green
# Replace symbol in model number with letter indicating SPLIT lens or LED color desired: **D** = Red/Clear or White; **E** = Blue/Clear or White; **F** = Amber/Clear or White; **H** White, **J** = Red/Blue; **K** = Red/Amber; **L** = Red/Green; **M** = Blue/Amber **†** (to be discontinued, check availability) **††** (special order, check availability, non-returnable,
! Indicate length desired: 5 foot, 6 foot, 7 foot or 8 foot **$** Indicates Lower Price

↓ - Special Order, Non-Returnable, Non-Cancelable. See "Made-To-Order" Statement on Table of Contents Page of this Price List.

MODEL	DESCRIPTION	LIST
MCRNS*X	Surface Mount, Red, Blue, Amber or White, Black Flange with Smoked Lens	166.00
MCRNS#X	Surface Mount, Split Color, Red/Amber, Amber/White, Red/Blue or Red/White Only, Black Flange with Smoked Lens	172.00
MCRNSC*	Surface Mount, Red, Blue, Amber or White, Chrome Flange	177.00
MCRNSC#	Surface Mount, Split Color, Red/Amber, Amber/White, Red/Blue or Red/White Only, Chrome Flange	182.00
MCRNT*	Stud Mount, Red, Blue, Amber or White	156.00
MCRNT#	Stud Mount, Split Color, Red/Amber, Amber/White, Blue/Amber, Red/Blue or Red/White Only	162.00
MCRNT*X	Stud Mount, Red, Blue, Amber or White, with Smoked Lens	166.00
MCRNT#X	Stud Mount, Split Color, Red/Amber, Amber/White, Red/Blue or Red/White Only, with Smoked Lens	172.00
MCRNB1	"L" Angle Mounting Bracket, Black	12.50
MCRNB2	Optional Universal License Plate Bracket for Two MCRNS Lightheads, Horizontal Mount	32.50
Mirror-Beam™ Mirror Mounted Super-LED® Series Lightheads, Includes 15' Cable with AMP Connectors, Textured Black Finish, Sold in Pairs. Available in Blue, Red and/or Amber. For White Super-LEDs®, Contact Factory for Pricing.		
MBCC11**	Chevy Caprice, 2011-2017	415.00
MXCC11**	Chevy Caprice, 2011-2017 with Smoked Lens	436.00
MBCC11JJ	Chevy Caprice, 2011-2017, Two Split Red/Blue Lightheads	415.00
MXCC11JJ	Chevy Caprice, 2011-2017, Two Split Red/Blue Lightheads with Smoked Lens	436.00
MBCT15**	Chevy Tahoe and Suburban 1500, 2015-2017	395.00
MXCT15**	Chevy Tahoe and Suburban 1500, 2015-2017 with Smoked Lens	416.00
MBCT15JJ	Chevy Tahoe and Suburban 1500, 2015-2017, Two Split Red/Blue Lightheads	395.00
MXCT15JJ	Chevy Tahoe and Suburban 1500, 2015-2017, Two Split Red/Blue Lightheads with Smoked Lens	416.00
MBDC11**	Dodge Charger, 2011-2017	395.00
MBDC11JJ	Dodge Charger, 2011-2017, Two Split Red/Blue Lightheads	395.00
MXDC11**	Dodge Charger, 2011-2017 with Smoked Lens	416.00
MXDC11JJ	Dodge Charger, 2011-2017, Two Split Red/Blue Lightheads with Smoked Lens	416.00
MBFT11**	Ford Police Interceptor, 2013-2017	395.00
MBFT11JJ	Ford Police Interceptor, 2013-2017, Two Split Red/Blue Lightheads	395.00
MXFT11**	Ford Police Interceptor, 2013-2017 with Smoked Lens	416.00
MXFT11JJ	Ford Police Interceptor, 2013-2017, Two Split Red/Blue Lightheads with Smoked Lens	416.00
MBFX11**	Ford Police Interceptor Utility, 2013-2017	395.00
MBFX11JJ	Ford Police Interceptor Utility, 2013-2017, Two Split Red/Blue Lightheads	395.00
MXFX11**	Ford Police Interceptor Utility, 2013-2017 with Smoked Lens	416.00
MXFX11JJ	Ford Police Interceptor Utility, 2013-2017, Two Split Red/Blue Lightheads with Smoked Lens	416.00

Mirror-Beam™ ION™ V-Series™ Mirror Mounted Super-LED® Series Lightheads, Includes 15' Cable,Textured Black Finish, Sold in Pairs, Available in Red, Blue, Amber and/or White.		
VMCC11**	Chevy Caprice, 2011-2017	589.00
VXCC11**	Chevy Caprice, 2011-2017 with Smoked Lens	610.00
VMCT15**	Chevy Tahoe and Suburban 1500, 2015-2017	577.00
VXCT15**	Chevy Tahoe and Suburban 1500, 2015-2017 with Smoked Lens	598.00
VMDC11**	Dodge Charger, 2011-2017	577.00
VXDC11**	Dodge Charger, 2011-2017 with Smoked Lens	598.00
VMFT11**	Ford Police Interceptor, 2013-2017	577.00
VXFT11**	Ford Police Interceptor, 2013-2017 with Smoked Lens	598.00
VMFX11**	Ford Police Interceptor Utility, 2013-2017	577.00
VXFX11**	Ford Police Interceptor Utility, 2013-2017 with Smoked Lens	598.00

Mirror-Beam™, Mirror Mounted Linear Super-LED® Series Lightheads, Includes 15' Cable with AMP Connectors, Textured Black Finish, Sold in Pairs, Available in Red, Blue and/or Amber. For White Super-LEDs®, Contact Factory for Pricing.		
MBPI06**	Chevy Impala, 2006-2016	580.00
Pan & Tilt™ Super-LED® Spotlight		
PT360P	Permanent Mount with Wired Control	1015.00
PT360PW	Permanent Mount with Wireless Control	1061.00
PT360F	Flange Mount with Wired Control	1015.00
PT360FW	Flange Mount with Wireless Control	1061.00

PAR-36 Super-LED® Floodlights and Spotlights		
P36SLC	PAR-36, 12/24 VDC, Replacement	194.00
P36SLCHG	PAR-36, 12/24 VDC, Combination Spotlight/Floodlight. Includes Rubber Swivel Housing with Stainless Steel Bracket and Hardware	218.00
P36HHS	PAR-36, Super-LED® Hand Held Combination Spotlight/Floodlight, 12/24 VDC, Includes Cigar Cord, On/Off Switch and Magnet	410.00
PAR-36 Round Super-LED® Work Light, Cast Aluminum and Includes Pedestal/Swivel Mount, Standard.		
3PC0C0CD	White, Intensity Level 3, Deutsch® Connector	359.00
PAR-36 Round Super-LED® Work Light with Pedestal/Swivel Mount, Built-in On/Off Switch and Removable "T" Handle.		
PFBP12	12 Super-LED® Floodlight, Black Housing	442.00
PFBP12C	12 Super-LED® Floodlight, Black Housing with Chrome Rear Cover	453.00
PFBP6	6 Super-LED® Floodlight, Black Housing	376.00
PFBP6C	6 Super-LED® Floodlight, Black Housing with Chrome Rear Cover	386.00

	PSBP12	12 Super-LED® Spotlight, Black Housing	442.00
	PSBP12C	12 Super-LED® Spotlight, Black Housing with Chrome Rear Cover	453.00
	PSBP6	6 Super-LED® Spotlight, Black Housing	376.00
	PSBP6C	6 Super-LED® Spotlight, Black Housing with Chrome Rear Cover	386.00
	PAR-36 Round Super-LED® Work Light with Stud/Swivel Mount.		
	PFBS12	12 Super-LED® Floodlight, Black Housing	298.00
	PFBS12C	12 Super-LED® Floodlight, Black Housing with Chrome Rear Cover	309.00
	PFBS6	6 Super-LED® Floodlight, Black Housing	234.00
	PFBS6C	6 Super-LED® Floodlight, Black Housing with Chrome Rear Cover	244.00
	PSBS12	12 Super-LED® Spotlight, Black Housing	298.00
	PSBS12C	12 Super-LED® Spotlight, Black Housing with Chrome Rear Cover	309.00
	PSBS6	6 Super-LED® Spotlight, Black Housing	234.00
	PSBS6C	6 Super-LED® Spotlight, Black Housing with Chrome Rear Cover	244.00
	PFBS6S	6 Super-LED® Floodlight, Black Housing with Switch	234.00
	PFBS12S	12 Super-LED® Floodlight, Black Housing with Switch	298.00
	PSBS6S	6 Super-LED® Spotlight, Black Housing with Switch	234.00
	PSBS12S	12 Super-LED® Spotlight, Black Housing with Switch	298.00
	PAR-46 Super-LED® Steady-Burn Floodlights, Spotlights and Combination Spotlight and Warning Light		
	P46SLC	PAR-46, 12 VDC, Replacement, 2° Spotlight	260.00
	P46SLCX	PAR-46, 12 VDC, Replacement, 2° Spotlight, with Smoked Lens	270.00
	P46FL*	PAR-46, 12 VDC, Replacement, 8° Spotlight, Amber, Blue, Red or White (Steady-Burn)	260.00
	P46FLCX	PAR-46, 12 VDC, Replacement, 8° Spotlight, with Smoked Lens	270.00
	P46WL*	PAR-46, 12 VDC, Replacement, 20° High x 60° Wide Floodlight Pattern, Amber, Blue, Red or White (Steady-Burn)	260.00
	P46WLCX	PAR-46, 12 VDC, Replacement, 20° High x 60° Wide Floodlight Pattern, with Smoked Lens	270.00
	P46SLCHG	PAR-46, Spotlight 12 VDC, Includes Rubber Swivel Housing with Stainless Steel Bracket and Hardware	288.00
	P46HHS	PAR-46, Super-LED® Hand Held Spotlight, 12 VDC, Includes Cigar Cord, On/Off Switch and Magnet	486.00
	P46S2*	PAR-46, 12 VDC, Replacement, 8° Spotlight with Blue or Red Warning. For Unity® Spotlight Mounting Only. One Wire Control for Spot and Warning	343.00
	P46S2X	PAR-46 12 VDC, Replacement, California Steady Red and 8° Spotlight, for Unity® Spotlight Mounting Only. One Wire Control of Steady Red and Spotlight Override	343.00
	P46S2X2	PAR-46 12 VDC, Replacement, 8° Spot Light with California Steady Red, for Unity® Spot Light Mounting Only. One Wire Control of Spot light and Steady Red Override	343.00
	P46S2*3	PAR-46, 12 VDC, Replacement, 8° Spotlight with Blue or Red Warning. For Unity® Spotlight Mounting. One Wire Color Control for Spot, Warning and Alternate Flash of Spot/Warning	343.00
	P46S3*H	PAR-46, 12 VDC, 8° Spotlight with Blue or Red Warning. Includes Rubber Swivel Housing with Stainless Steel Bracket and Hardware. Independent Control of Spotlight and Warning Light with Spot Light Override	371.00
	Perimeter Enhancement Light, Super-LED®, Steady White.		
	PELCC	Chrome Flange, White	210.00
	PELCB	Black Flange, White	210.00
	Pioneer Micro™ Series, Super-LED® Work/Scene Light, Includes Mounting Bracket and 3 Additional Interchangeable Optic Lenses.		
	MPBW	Bail/Stud Mount, White Housing	421.00
	MPBB	Bail/Stud Mount, Black Housing	421.00
	MPPW	Low Profile Pedestal/Swivel Mount, White Housing	579.00
	MPPWCS	Low Profile Pedestal/Swivel Mount, White Housing with Chrome Cover and On/Off Switch	599.00
	MPPB	Low Profile Pedestal/Swivel Mount, Black Housing	579.00
	MPPBBS	Low Profile Pedestal/Swivel Mount, Black Housing with Black Cover and On/Off Switch	579.00
	MPPBCS	Low Profile Pedestal/Swivel Mount, Black Housing with Chrome Cover and On/Off Switch	599.00
	MPRW	Straight Recessed Mount, White	516.00
	MPRB	Straight Recessed Mount, Black	516.00
	MPR15W	15 Degree Recessed Mount, White	516.00
	MPR15B	15 Degree Recessed Mount, Black	516.00
	NPBKT1	2013-2016 Ford F-250/350 Super Duty Pillar/Hood Mount Bracket for Micro Pioneer™ Bail/Stud Mount or Nano™ Pioneer Bail Mount	79.00
	NPBKT2	2015-2017 Ford F-150 Pillar/Hood Mount Bracket for Micro Pioneer™ Bail/Stud Mount or Nano™ Pioneer Bail Mount	109.00
	Pioneer Nano™ NP Series, Includes Bail Mount, Two Interchangeable Lenses (8° and 40° X 20°) and a 6' Harness.		
	NP3BW	3-LED, with Bail Mount, White	208.00
	NP3BB	3-LED, with Bail Mount, Black	208.00
	NP6BW	6-LED, with Bail Mount, White	260.00
	NP6BB	6-LED, with Bail Mount, Black	260.00
	NPBKT1	2013-2016 Ford F-250/350 Super Duty Pillar/Hood Mount Bracket for Micro Pioneer™ Bail/Stud Mount or Nano™ Pioneer Bail Mount	79.00
	NPBKT2	2015-2017 Ford F-150 Pillar/Hood Mount Bracket for Micro Pioneer™ Bail/Stud Mount or Nano™ Pioneer Bail Mount	109.00

All models are 12 Volt D.C. only unless otherwise noted above. For other voltages contact factory.
***** Replace symbol in model number with letter indicating lens color or LED color desired: **A** = Amber; **B** = Blue; **C** = Clear/White; **R** = Red; **G** = Green
# Replace symbol in model number with letter indicating SPLIT lens or LED color desired: **D** = Red/Clear or White; **E** = Blue/Clear or White; **F** = Amber/Clear or White; **H** = Green/Clear or White, **J** = Red/Blue; **K** = Red/Amber; **L** = Red/Green; **M** = Blue/Amber **†** (to be discontinued, check availability) (special order, check availability, non-returnable, non-cancelable)
! Indicate length desired: 5 foot, 6 foot, 7 foot or 8 foot **$** Indicates Lower Price

↓ - Special Order, Non-Returnable, Non-Cancelable. See "Made-To-Order" Statement on Table of Contents Page of this Price List.

MODEL	DESCRIPTION	LIST
	Pioneer™ Series and Pioneer Plus™ Series, White Housing, 12 VDC unless noted, Super-LED® Flood/Spot Lights. Requires Optional Mounting Kit Purchased Separately, Unless Specified. For Black Housing, Add a "B" to the End of the Model Number, Contact Factory for Availability.	
PFA1	Single Panel Pioneer™ Floodlight	640.00
PFA1LP	PFA1 with Low Profile Pedestal/Swivel Mount	796.00
PFP1	Single Panel Pioneer Plus™ Floodlight	858.00
PFS1	Single Panel Pioneer Plus™ Combination Flood/Spot	858.00
PFP1LP	PFP1 with Low Profile Pedestal/Swivel Mount	1014.00
PFA2	Dual Panel Pioneer™ Floodlight	1121.00
PFP2	Dual Panel Pioneer Plus™ Floodlight	1497.00
PSP1	Single Panel Pioneer Plus™ Spotlight, 8°	858.00
PSP1LP	PSP1 with Low Profile Pedestal/Swivel Mount	1014.00
PTP1	Single Panel Pioneer Plus™ Spotlight, 2°	858.00
PTP1LP	PTP1 with Low Profile Pedestal/Swivel Mount	1014.00
PFS2	Dual Panel Pioneer Plus™ Combination Flood/Spot	1497.00
PFP1AC	Single Panel Pioneer Plus™ Floodlight, 115 VAC, UL® Listed	1030.00
PSP1AC	Single Panel Pioneer Plus™, Spot Light, 8°, 115 VAC, UL® Listed	1030.00
PSP1ALP	PSP1AC with Low Profile Pedestal/Swivel Mount, 115 VAC, UL® Listed	1186.00
PFP2AC	Dual Panel Pioneer Plus™ Floodlight, 115 VAC, UL® Listed	1787.00
PCP2AFS	Dual Panel Pioneer Plus™ Combination Flood (Left)/Spotlight (Right), 115 VAC, UL® Listed	1787.00
PCP2ASF	Dual Panel Pioneer Plus™ Combination Spot (Left)/Floodlight (Right), 115 VAC, UL® Listed	1787.00
PCP3	Pioneer Plus™ Max Combination Flood and 8° Spotlight	1920.00
PCP3A	Pioneer Plus™ Max Combination Flood and 8° Spotlight, 115 VAC, UL® Listed	1920.00

	Options for Pioneer™ & Pioneer Plus™ Series, For Black Housing, Add a "B" to the End of the Model Number, Contact Factory for Availability.	
PBA106U	Universal Bail Mount Bracket (Vertical or Horizontal), White, For Single Pioneer™ (PFA1/PFP1)	101.00
PBA206U	Universal Bail Mount Bracket (Vertical or Horizontal), White, For Dual Pioneer™ (PFA2/PFP2)	115.00
PBA103	Semi-Recess Housing with Chrome Flange, Mounts Single Pioneer™ (PFA1/PFP1) Straight or at a 15° Angle	299.00
PBA203	Semi-Recess Housing with Chrome Flange, Mounts Dual Pioneer™ (PFA2/PFP2) Straight or at a 15° Angle	324.00
PBAINTC	Brow Mount Brackets, Center Mount for International 4300, 4400, 7400 and Terrastar Chassis (Dual Pioneer™ Only)	163.00
PFLASH	Flasher with Steady-Burn Override, Multiple Flash Patterns	109.00

	Pioneer™ and Pioneer Plus™ Series, Includes Handle and Pole/Pedestal Mount Adapter, (Pole or Pedestal Purchased Separately), White Housing, 12 VDC unless noted, Super-LED® Flood/Spot Lights. For Black Housing, Add a "B" to the End of the Model Number, Contact Factory for Availability.	
PFA1P	Single Panel Pioneer™ with Pole/Pedestal Mount Adapter	884.00
PFA1P1	Single Panel Pioneer™ with Pole/Pedestal Mount Adapter and On/Off Switch	910.00
PFP1P	Single Panel Pioneer Plus™ with Pole/Pedestal Mount Adapter	1100.00
PFP1P1	Single Panel Pioneer Plus™ with Pole/Pedestal Mount Adapter and On/Off Switch	1126.00
PFA2P	Dual Panel Pioneer™ with Pole/Pedestal Mount Adapter	1367.00
PFA2P1	Dual Panel Pioneer™ with Pole/Pedestal Mount Adapter and On/Off Switch	1394.00
PFP2P	Dual Panel Pioneer Plus™ with Pole/Pedestal Mount Adapter	1741.00
PFP2P1	Dual Panel Pioneer Plus™ with Pole/Pedestal Mount Adapter and On/Off Switch	1766.00
PSP1P	Single Panel Pioneer Plus™, 8° Spotlight with Pole/Pedestal Mount Adapter	1100.00
PSP1P1	Single Panel Pioneer Plus™, 8° Spotlight with Pole/Pedestal Mount Adapter and On/Off Switch	1126.00
PSP1AP	Single Panel Pioneer Plus™, 8° Spotlight, 115 VAC, UL® Listed with Pole/Pedestal Mount Adapter	1186.00
PSP1AP1	Single Panel Pioneer Plus™, 8° Spotlight, 115 VAC, UL® Listed with Pole/Pedestal Mount Adapter and On/Off Switch	1213.00
PFS1P	Single Panel Pioneer™ with Pole/Pedestal Mount Adapter, Combination Flood/Spot	1100.00
PFS1P1	Single Panel Pioneer™ with Pole/Pedestal Mount Adapter and On/Off Switch, Combination Flood/Spot	1126.00
PFS2P	Dual Panel Pioneer™ with Pole/Pedestal Mount Adapter, Combination Flood/Spot (Replaces PCP2P)	1741.00
PFS2P1	Dual Panel Pioneer™ with Pole/Pedestal Mount Adapter and On/Off Switch, Combination Flood/Spot (Replaces PCP2P1)	1766.00
PFP1AP	Single Panel Pioneer Plus™, 115 VAC, with Pole/Pedestal Mount Adapter	1273.00
PFP1AP1	Single Panel Pioneer Plus™, 115 VAC, with Pole/Pedestal Mount Adapter and On/Off Switch	1299.00
PFP2AP	Dual Panel Pioneer Plus™, 115 VAC, with Pole/Pedestal Mount Adapter	2029.00
PFP2AP1	Dual Panel Pioneer Plus™, 115 VAC, with Pole/Pedestal Mount Adapter and On/Off Switch	2056.00
PBAPEDD	Pedestal Mount Kit for Pioneer™ with Pole/Pedestal Mount Adapter	316.00
PBAPEDDL	Locking Pedestal Mount Kit for Pioneer™ with Pole/Pedestal Mount Adapter	373.00
PBAPEDA	Pedestal Mount Kit for 115 VAC Pioneer™ with Pole/Pedestal Mount Adapter	316.00
PBAPEDAL	Locking Pedestal Mount Kit for 115 VAC Pioneer™ with Pole/Pedestal Mount Adapter	373.00
PCP2AP	Dual Panel Pioneer Plus™ Combination Flood/8° Spotlight, 115 VAC, UL® Listed with Pole/Pedestal Mount Adapter	2056.00

	PCP2AP1	Dual Panel Pioneer Plus™ Combination Flood/8° Spotlight, 115 VAC, UL® Listed with Pole/Pedestal Mount Adapter and On/Off Switch	2056.00
	PCP3P	Pioneer Plus Max™ Combination Flood and 8° Spotlight with Pole/Pedestal Mount Adapter	2076.00
	PCP3P1	Pioneer Plus Max™ Combination Flood and 8° Spotlight with Pole/Pedestal Mount Adapter and On/Off Switch	2103.00
	PCP3AP	Pioneer Plus Max™ Combination Flood and 8° Spotlight, 115 VAC, UL® Listed with Pole/Pedestal Mount Adapter	2076.00
	PCP3AP1	Pioneer Plus Max™ Combination Flood and 8° Spotlightt, 115 VAC, UL® Listed with Pole/Pedestal Mount Adapter and On/Off Switch	2103.00

Pioneer Quad™, 4 Panel, 120 VAC Floodlight and Combination Flood/Spotlight

	PFP4AWB	Pioneer Quad™, Flood, 115 VAC, UL® Listed with Bail Mount Bracket	2821.00
	PFP4AWP	Pioneer Quad™, Flood, 115 VAC, UL® Listed with Pole/Pedestal Mount Adapter	3278.00
	PFP4AWP1	Pioneer Quad™, Flood, 115 VAC, UL® Listed with Pole/Pedestal Mount Adapter and 1 Switch	3304.00

Pioneer™ Series & Pioneer Plus™ Series, Lightbar Mount, Super-LED® Flood/Spot Lights, Includes Permanent Mounting Feet, White Flood/Spot Mounting Bracket and Flasher with Scan-Lock™ Flash Patterns, Including Steady Burn. Factory Installed on Freedom IV Lightbars Only. Lightbar Purchased Separately and May Prevent the Use of Other Options. Freight Surcharge May Apply. For Black Housing, Add a "B" to the End of the Model Number, Contact Factory for Availability.

	PFA1F41	1 Single PFA1 Pioneer™ Center Mounted for 55" and Up	1422.00
	PFA1F42	2 Single PFA1 Pioneer™s with Mounting Brackets for 72" and Up	2279.00
	PFP1F41	1 Single PFP1 Pioneer™ Center Mounted for 55" and Up	1641.00
	PFP1F42	2 Single PFP1 Pioneer™s with Mounting Brackets for 72" and Up	2719.00
	PFA2F41	1 Dual PFA2 Pioneer™ Center Mounted for 55" and Up	1958.00
	PFA2F42	2 Dual PFA2 Pioneer™s with Mounting Brackets for 72" and Up	3458.00
	PFP2F41	1 Dual PFP2 Pioneer™ Center Mounted for 55" and Up	2333.00
	PFS2F41	**NEW** 1 Dual PFS2 Pioneer™ Center Mounted for 55" and Up, Combination Flood/Spot	2333.00
	PFP2F42	2 Dual PFP2 Pioneer™s with Mounting Brackets for 72" and Up	4209.00
	PFS2F42	**NEW** 2 Dual PFS2 Pioneer™s with Mounting Brackets for 72" and Up, Combination Flood/Spot	4209.00
	PFS1F41	1 Single PFS1 Pioneer™ Center Mount for 55" and Up, Combination Flood/Spot	1641.00
	PFS1F42	2 Single PFS1 Pioneer™s with Mounting Brackets for 72" and Up, Combination Flood/Spot	2719.00

Pole Assemblies, For Pole Assemblies, See Separate Pole Assemblies Price List. Freight Surcharge May Apply.

	0	For Pole Assemblies, See Separate Pole Assemblies Price List	

Pioneer Plus™ Surface Mount Single and Dual Flood/Spot Combination

	PCPSM1C	Single Panel, Combination Flood/Spot, Chrome Flange	832.00
	PCPSM1B	Single Panel, Combination Flood/Spot, Black Flange	832.00
	PCPSM2C	Dual Panel, Combination Flood/Spot, Chrome Flange	1612.00
	PCPSM2B	Dual Panel, Combination Flood/Spot, Black Flange	1612.00
	PCPSM2AC	**NEW** Dual Panel, Combination Flood/Spot, 115 VAC, UL® Listed, Chrome Flange	1902.00
	PCPSM2AB	**NEW** Dual Panel, Combination Flood/Spot, 115 VAC, UL® Listed, Black Flange	1902.00

Pioneer SlimLine™ Series, 12 VDC, Super-LED®. Standard Spotlight includes Interchangeable Flood/Flood Lens and the PSL2 also Includes a Combination Flood/Spot Light Lens.

	PSL1B	Single Panel, Bail/Stud Mount, White Housing	421.00
	PSL1BB	Single Panel, Bail/Stud Mount, Black Housing	421.00
	PSL1P	Single Panel, Low Profile Pedestal/Swivel Mount, White Housing	572.00
	PSL1PB	Single Panel, Low Profile Pedestal/Swivel Mount, Black Housing	572.00
	PSL1R	Single Panel, Semi-Recessed, Chrome Flange Mount, White Housing	485.00
	PSL1RB	Single Panel, Semi-Recessed, Chrome Flange Mount, Black Housing	485.00
	PSL1R5	Single Panel, Semi-Recessed 15° Angle Chrome Flange Mount, White Housing	485.00
	PSL1R5B	Single Panel, Semi-Recessed 15° Angle Chrome Flange Mount, Black Housing	485.00
	PSL2B	Dual Panel, Bail/Stud Mount, White Housing	858.00
	PSL2BB	Dual Panel, Bail/Stud Mount, Black Housing	858.00
	PSL2P	Dual Panel, Low Profile Pedestal/Swivel Mount, White Housing	1015.00
	PSL2PB	Dual Panel, Low Profile Pedestal/Swivel Mount, Black Housing	1015.00
	PSL2R	Dual Panel, Semi-Recessed, Chrome Flange Mount, White Housing	858.00
	PSL2RB	Dual Panel, Semi-Recessed, Chrome Flange Mount, Black Housing	858.00
	PSL2R5	Dual Panel, Semi-Recessed 15° Angle Chrome Flange Mount, White Housing	858.00
	PSL2R5B	Dual Panel, Semi-Recessed 15° Angle Chrome Flange Mount, Black Housing	858.00

Pioneer SlimLine™ Brow Mount Series, 12 VDC, Super-LED®. Standard Spotlight includes Interchangeable Flood/Flood and Combination Flood/Spot Lenses.

	PSL2	Dual Panel, White Housing, Mounting Purchased Separately	858.00
	PSL2BLK	Dual Panel, Black Housing, Mounting Purchased Separately	858.00

Pioneer LiFe™ Battery Operated Portable Area Light Series, Includes Intelligent Inductive Charger™ and Floodlight Lens (Interchangeable Spotlight Lens Supplied)

	LF35	**NEW** 12 VDC, Rechargeable	1425.00
	LF35A	**NEW** 115 - 240 VAC, Rechargeable, with Standard NEMA Plug for U.S.	1525.00
	LF35E	**NEW** 240 VAC, Rechargeable, with CEE7 Plug for Europe	1525.00
	LF35BASE	**NEW** Optional Non-Charging Base Only	99.00
	LF35CB12	**NEW** Optional 12 VDC, Charging Base Only	369.00
	LF35CBAC	**NEW** Optional 115 - 240 VAC, Charging Base Only, with Standard NEMA Plug for U.S.	469.00
	LF35CBAE	**NEW** Optional 240 VAC, Charging Base Only, with CEE7 Plug for Europe	469.00

All models are 12 Volt D.C. only unless otherwise noted above. For other voltages contact factory.
***** Replace symbol in model number with letter indicating lens color or LED color desired: **A** = Amber; **B** = Blue; **C** = Clear/White; **R** = Red; **G** = Green
# Replace symbol in model number with letter indicating SPLIT lens or LED color desired: **D** = Red/Clear or White; **E** = Blue/Clear or White; **F** = Amber/Clear or White; **H** = Green/Clear or White, **J** = Red/Blue; **K** = Red/Amber; **L** = Red/Green; **M** = Blue/Amber **†** (to be discontinued, check availability) (special order, check availability, non-returnable, non-cancelable)
! Indicate length desired: 5 foot, 6 foot, 7 foot or 8 foot **$** Indicates Lower Price

↓ †† - Special Order, Non-Returnable, Non-Cancelable. See "Made-To-Order" Statement on Table of Contents Page of this Price List.

	MODEL	DESCRIPTION	LIST
		SideKick™ Super-LED® Fender Lights, Black Housing, Includes Driver and Passenger Side Housing with ION™ Lightheads. Available in Red, Blue, Amber and/or White.	
	SK01**	Ford Police Interceptor, 2013-2017	504.00
	SK01JJ	Ford Police Interceptor, 2013-2017, Two Split Red/Blue Lightheads	504.00
	SK01V3**	Ford Police Interceptor, 2013-2017, V-Series Lighthead with 180° Warning, Take Down and Puddle Light Combination, Red, Blue, Amber or White Warning	682.00
	SK01W**	Ford Police Interceptor, 2013-2017, Wide Angle	504.00
	SK01WJJ	Ford Police Interceptor, 2013-2017, Two Split Red/Blue Lightheads, Wide Angle	504.00
	XK01**	Ford Police Interceptor, 2013-2017 with Smoked Lens	525.00
	XK01JJ	Ford Police Interceptor, 2013-2017, Two Split Red/Blue Lightheads with Smoked Lens	525.00
	XK01V3**	Ford Police Interceptor, 2013-2017, V-Series Lighthead with 180° Warning, Take Down and Puddle Light Combination, Red, Blue, Amber or White Warning with Smoked Lens	702.00
	XK01W**	Ford Police Interceptor, 2013-2017, Wide Angle with Smoked Lens	525.00
	XK01WJJ	Ford Police Interceptor, 2013-2017, Two Split Red/Blue Lightheads, Wide Angle with Smoked Lens	525.00
	SK02**	Chevy Caprice, 2011-2017	504.00
	SK02JJ	Chevy Caprice, 2011-2017, Two Split Red/Blue Lightheads	504.00
	SK02V3**	Chevy Caprice, 2011-2017, V-Series Lighthead with 180° Warning, Take Down and Puddle Light Combination, Red, Blue, Amber or White Warning	682.00
	SK02W**	Chevy Caprice, 2011-2017, Wide Angle	504.00
	SK02WJJ	Chevy Caprice, 2011-2017, Two Split Red/Blue Lightheads, Wide Angle	504.00
	XK02**	Chevy Caprice, 2011-2017 with Smoked Lens	525.00
	XK02JJ	Chevy Caprice, 2011-2017, Two Split Red/Blue Lightheads with Smoked Lens	525.00
	XK02V3**	Chevy Caprice, 2011-2017, V-Series Lighthead with 180° Warning, Take Down and Puddle Light Combination, Red, Blue, Amber or White Warning with Smoked Lens	702.00
	XK02W**	Chevy Caprice, 2011-2017, Wide Angle with Smoked Lens	525.00
	XK02WJJ	Chevy Caprice, 2011-2017, Two Split Red/Blue Lightheads, Wide Angle with Smoked Lens	525.00
		Strip-Lite™ Super-LED® 5mm LED Series, Surface Mount, Color LEDs with Color Outer Lens.	
	PS*00F*R	5mm, Amber or Red, 14 Flash Patterns including Steady-Burn	132.00
	PSB00FBR	5mm, Blue, 14 Flash Patterns including Steady-Burn	234.00
	PSC00FCR	5mm, White, 14 Flash Patterns including Steady-Burn	357.00
	PSR00XRR	5mm, Brake/Tail, with 2 Flash Patterns	140.00
	PSRASXCR	5mm, Brake/Tail with Amber Turn Signal	140.00
	PSTANK	5mm, Water Tank Status Light, Steady-Burn Green, Blue, Amber & Red LEDs. Requires Customer-Supplied Sensors	237.00
	PSC0ADCR	Super-LED® Compartment Light, Intensity Level 2, Frosted Lens	91.00
	PSC0CDCR	Super-LED® Compartment Light, Intensity Level 3, Frosted Lens	138.00
	PSBKT451	45° Mounting Bracket for 1 Strip-Lite™ Compartment Light	23.50
	PSBKT1	Guard for use with or without Single Angle Bracket	34.00
		TIR3™ & LIN3™ Series Super-LED® Lightheads, Surface Mount, Color Super-LED® with Clear Outer Lens, 3.5" W x 1.1" H x 1.2" D. Includes Black Flange. Scan-Lock™ Flash Patterns including Steady-Burn and Synchronize Feature.	
	RS*02ZCR	LIN3™, Horizontal Mounting, Amber, Blue, Red or White	98.00
	RS*03ZCR	TIR3™, Horizontal Mounting, Amber, Blue, Red or White	98.00
	RV*03ZCR	TIR3™, Vertical Mounting, Amber, Blue, Red or White	98.00
		LINZ6™ & LINV2™ V-Series™ Linear Super-LED® Lightheads, Surface Mount, Color Super-LED® with Clear Outer Lens, 4" W x 2" H x 1-9/16" D, Includes Black Flange. Scan-Lock™ Flash Patterns Including Steady-Burn and Synchronize Feature.	
	LINV2*	V-Series™, Combination 180° Warning and Puddle Light with Scan-Lock™ Warning Flash Patterns, Red, Blue, Amber or White Warning	235.00
	LINSV2*	V-Series™, Combination 180° Warning and Puddle Light with Scan-Lock™ Flash Patterns for Under Surface Mounting, Amber, Blue or Red	245.00
	LINV2*X	V-Series™, Combination 180° Warning and Puddle Light with Scan-Lock™ Warning Flash Patterns, Red, Blue, Amber or White Warning with Smoked Lens	245.00
	LINSV2*X	V-Series™, Combination 180° Warning and Puddle Light with Scan-Lock™ Flash Patterns for Under Surface Mounting, Amber, Blue or Red Warning with Smoked Lens	255.00
	LINZ6*	Horizontal Mount, Amber, Blue, Red or White	156.00
	LINZ6#	Split Color, Clear Lens, Red/Amber, Amber/White, Red/Blue or Red/White Only, Horizontal Mount	162.00
	LINZ61	Horizontal Mount, Amber/Amber Split	163.00
	LINZ62	Horizontal Mount, Blue/Blue Split	163.00
	LINZ65	Horizontal Mount, Red/Red Split	163.00
		Options for TIR3™, LIN3™, LINZ6™ & LINV2™ V-Series™ Linear Series Super-LED®	
	RFLANGCD	Optional, Deep, Chrome-Plated Mounting Flange Kit (Not for Use with LINV2™ Series)	16.50
	RFLANGEC	Optional Chrome-Plated Mounting Flange Kit	16.50
	RFLANGEA	Optional Cast Aluminum Mounting Flange Kit (Not for Use with LINV2™ Series)	29.50
	RFLANG2B	Optional Black, Dual Surface Mount Flange Kit for Two Lightheads	14.50
	RFLANG2C	Optional Chrome-Plated, Dual Surface Mount Flange Kit for 2 Lightheads	19.50
	LINZ6FC	Optional Deep Chrome-Plated Mounting Flange Kit (Not for Use with LINV2™ Series)	16.50
	RGROMMET	Grommet Mount Kit	7.15
††	L6BKT2	Optional Dodge Charger Trunk Mount Bracket for Two LINZ6™ Lightheads, Pair	22.50

	L6BKT3	Optional 46 Degree Push Bumper Bracket, Each	15.50
	LSVBKT37	Chevy Caprice, 2011-2017, Under-the-Side View Mirror Mount for Two LINSV2™ Series Sold Separately, Pair (When Used with Mirror Beam™s, Housing Modification maybe Required)	24.50
	LSVBKT45	Chevy Tahoe/Suburban, 2015-2017, Under-the-Side View Mirror Mount for two LINSV2™ Series Sold Separately, Pair	24.50
	LSVBKT13	Chevy Silverado 1500/2500, 2014-2016, Under-the-Side View Mirror Mount for Two LINSV2™ Series Sold Separately, Pair	24.50
	LSVBKT35	Dodge Charger, 2011-2017, Under-the-Side View Mirror Mount for Two LINSV2™ Series Sold Separately, Pair (When Used with Mirror Beam™s, Housing Modification maybe Required)	24.50
	LSVBKT44	Dodge Durango, 2013-2016, Under-the-Side View Mirror Mount for Two LINSV2™ Series Sold Separately, Pair	24.50
	LSVBKT42	Dodge Ram 1500, 2011-2016, Under-the-Side View Mirror Mount for Two LINSV2™ Series Sold Separately, Pair	24.50
	LSVBKT47	**NEW** Ford F-150, 2015-2017, Under-the-Side View Mirror Mount for Two LINSV2™ Series Sold Separately, Pair	24.50
	LSVBKT34	Ford Police Interceptor Utility 2013-2017, Under-the-Side View Mirror Mount for Two LINSV2™ Series Sold Separately, Pair (For use with Ford's Factory Side Marker LED Side View Mirror Option)	24.50
	LSVBKT38	Ford Police Interceptor Sedan 2013-2017, Under-the-Side View Mirror Mount for Two LINSV2™ Series Sold Separately, Pair	24.50
	RBKT1	Optional "L" Mounting Bracket for 1 Lighthead (Consider Using LIN3™ Mounting Flange when used with LINZ6™, Purchased Separately and Not for Use with RV Series)	12.50
	RBKT2	Optional "L" Mounting Bracket for 2 Lightheads (Consider Using LIN3™ Mounting Flange when used with LINZ6™, Purchased Separately and Not for Use with RV Series)	21.50
	RBKT4	Optional Swivel Mounting Bracket For 1 TIR3™ or LIN3™	38.00
	RBKT6	Optional License Plate Bracket for 2 Lightheads, Horizontal Mount (Consider Using LIN3™ Mounting Flange when used with LINZ6™, Purchased Separately)	23.50
	RBKT7	Optional License Plate Bracket for 2 Lightheads, Vertical Mount (Consider Using LIN3™ Mounting Flange when used with LINZ6™, Purchased Separately)	23.50
	RBKT10	Optional Trunk Mount Bracket for Dodge Charger, Pair	31.50
	RBKT12	Optional 2013-2016 Ford F-250/350/450/550 Above the Rear Taillight Mounting Bracket, Pair (Consider Using LIN3™ Mounting Flange when used with LINZ6™, Purchased Separately)	63.00
	RBKT14	Optional 2014-2017 Chevy Silverado 1500 / GMC 1500 Above the Rear Taillight Mounting Bracket, Pair (Consider Using LIN3™ Mounting Flange when used with LINZ6™, Purchased Separately)	63.00
	RBKT16	Optional Trunk Mount Bracket for 2013-2017 Ford Police Interceptor Sedan, Pair	31.50
	RBKT17	Optional 2014-2016 Dodge Ram Above the Rear Taillight Mounting Bracket, Pair (Consider LIN3™ Mounting Flange, Purchased Separately)	63.00
	RBKT18	Optional 2015-2017 Ford F-150 Above the Rear Taillight Mounting Bracket, Pair	63.00
	RBKT19	Optional 2015-2017 Ford F-150 Below the Rear Taillight Mounting Bracket, Pair	63.00
	RBKTHD1	Harley-Davidson®, 2008-2017 Road King® Side Cowl Mounting Bracket Kit, for use with 1 Lighthead, Stainless Steel, Includes RFLANGEC, Each	19.50
	RBKTHD2	Harley-Davidson®, 2008-2017 Road King® Side (Saddle Bag) Crash Bar Mounting Bracket Kit, for use with 2 Lightheads, Stainless Steel, Includes RFLANG2C, Each	33.50
	RBKTHD3	Harley-Davidson®, 2008-2017 Road King®, Rear (Saddle Bag) Crash Bar Mounting Bracket Kit, for use with 2 Lightheads, Stainless Steel, Includes RFLANG2C, Each	39.00
††	RBKTHD4L	Harley-Davidson®, 2008-2017 Road King®, Under Radio Box Mounting Bracket Kit, for use with 1 Lighthead, Stainless Steel, Includes RFLANGEC, Road Side, Each	19.50
††	RBKTHD4R	Harley-Davidson®, 2008-2017 Road King®, Under Radio Box Mounting Bracket Kit, for use with 1 Lighthead, Stainless Steel, Includes RFLANGEC, Curb Side, Each	19.50
††	RBKTHD5	Harley-Davidson®, 2008-2017 Road King®, Under Headlight Mounting Bracket Kit, for use with 1 Lighthead, Stainless Steel, Includes RFLANGEC, Each	27.50
††	RBKTHD6	Harley-Davidson®, 2008-2017 Road King®, Passing/Fog Light Mounting Bracket Kit, for use with 1 LINZ6™, LINV2™, TIR3™ or LIN3™ Lighthead, Stainless Steel, Each	23.50
	RBKTHD7	2014-2017 Harley-Davidson® Electra Glide® Passing/Fog 90° Mount Kit for use with 1 LINZ6™, LINV2™, TIR3™ or LIN3™ Lightheads, Stainless Steel, Each	28.00
	RBKTHD8	2014-2017 Harley-Davidson® Electra Glide® Passing/Fog 90° and 45° Mount Kit for use with 2 LINZ6™, LINV2™, TIR3™ or LIN3™ Lightheads, Stainless Steel, Each	45.00

V23™ Series Super-LED® Surface Mount Lighthead, Clear Outer Lens, 4-1/4" Long x 2-11/16" High x 1-1/2" Protrusion, with Flange

	V23*TPB	Combination 180° Warning, Take-Down and Puddle Light Combination, Red, Blue, Amber or White Warning, Black Flange	282.00
	V23*TPC	Combination 180° Warning, Take-Down and Puddle Light Combination, Red, Blue, Amber or White Warning, Chrome Flange	287.00
	V23*TPBX	Combination 180° Warning, Take-Down and Puddle Light Combination, Red, Blue, Amber or White Warning with Smoked Lens, Black Flange	292.00
	V23*TPCX	Combination 180° Warning, Take-Down and Puddle Light Combination, Red, Blue, Amber or White Warning with Smoked Lens, Chrome Flange	297.00
	V23P20B	20° Angled Surface Mount Housing, Black	20.00
	V23P20C	20° Angled Surface Mount Housing, Chrome	27.00
	V23PEDB	Pedestal Mount Kit, Black	69.00
	V23PEDC	Pedestal Mount Kit, Chrome	75.00

All models are 12 Volt D.C. only unless otherwise noted above. For other voltages contact factory.
***** Replace symbol in model number with letter indicating lens color or LED color desired: **A** = Amber; **B** = Blue; **C** = Clear/White; **R** = Red; **G** = Green
# Replace symbol in model number with letter indicating SPLIT lens or LED color desired: **D** = Red/Clear or White; **E** = Blue/Clear or White; **F** = Amber/Clear or White; **H** = Green/Clear or White, **J** = Red/Blue; **K** = Red/Amber; **L** = Red/Green; **M** = Blue/Amber **†** (to be discontinued, check availability) **††** (special order, check availability, non-returnable, non-cancelable)
! Indicate length desired: 5 foot, 6 foot, 7 foot or 8 foot **$** Indicates Lower Price

↓†† - Special Order, Non-Returnable, Non-Cancelable. See "Made-To-Order" Statement on Table of Contents Page of this Price List.

	MODEL	DESCRIPTION	LIST
	Vertex™ Super-LED® Light, Single Self-Contained Lighthead with 25 Scan-Lock™ Flash Patterns, Including Steady-Burn.		
	VTX609*	Omni Directional Lighthead, Red, Blue, Amber or White, 9' Cable	135.00
	VTX609#	Omni Directional Lighthead, Split Color, Red, Blue, Amber and/or White, 9' Cable	140.00
	VTXD609*	Directional Lighthead, Includes Side Emitting Shield, Red, Blue, Amber or White, 9' Cable	135.00
	VTXD609#	Directional Lighthead, Includes Side Emitting Shield, Split Color, Red, Blue, Amber and/or White, 9' Cable	140.00
	VTX3609*	360° Side Emitter Lighthead, Red, Blue, Amber or White, 9' Cable	135.00
	VTX3609#	360° Side Emitter Lighthead, Split Color, Red, Blue, Amber and/or White, 9' Cable	140.00
	VTXFB	Flange Kit, Surface Mount, Black	8.70
	XTX609*	Omni Directional Lighthead, Red, Blue, Amber or White, 9' Cable with Smoked Lens	145.00
	VTXFC	Flange Kit, Surface Mount, Chrome	16.50
	XTX609#	Omni Directional Lighthead, Split Color, Red, Blue, Amber and/or White, 9' Cable with Smoked Lens	150.00
	XTXD609*	Directional Lighthead, Includes Side Emitting Shield, Red, Blue, Amber or White, 9' Cable with Smoked Lens	145.00
	XTXD609#	Directional Lighthead, Includes Side Emitting Shield, Split Color, Red, Blue, Amber and/or White, 9' Cable with Smoked Lens	150.00
	Vertex™ VHB Series, For Factory Prepped FORD Interceptor Sedans and SUVs with 1" Hole in Headlight and Taillight Assemblies.		
††	VHB609*	Red, Blue, Amber or White, 9' Cable and VHB Tape	135.00
††	VHB609#	Split Color, Red, Blue, Amber and/or White, 9' Cable and VHB Tape	140.00

DOT Wing Plow Super-LED® Lightheads

	Wing Plow Super-LED® Lightheads, Includes TIR3™ Super-LED® Encapsulated in a Cast Housing and 20' Cable.		
	WPLOW1A	Amber, for use when Wing Plow is in Use	218.00
	WPLOW2A	Amber, for use when Wing Plow is Stowed	218.00
	WPLOW3AA	Includes 1-WPLOW1A and 1-WPLOW2A	402.00
	Wing Plow LINZ6 Super-LED® Lighthead, Encapsulated in a Cast Housing with 20' Cable		
	WPLOWZ1A	Amber, for use when Wing Plow is in Use	271.00
	WPLOWZ2A	Amber, for use when Wing Plow is Stowed	271.00
	WPLOWZ3A	Includes WPLOWZ1A and WPLOWZ2A	514.00

DOT3® Super-LED®
For DOT3® Super-LED® Systems, See Separate DOT3® Price List

	For DOT3® Super-LED® Systems, See Separate DOT3® Price List		
	0	For DOT3® Super-LED® Systems, See Separate DOT3® Price List	

Motorcycle Warning Products
"Only the items listed in the Motorcycle Warning sections are recommended for motorcycle use". The use of any other Whelen Equipment is at the sole discretion and risk of the user.

	Motorcycle Warning Products		
	UFM8	Eight Outlet Halogen/LED Flasher, 60 Watts per outlet, 2x2x2x2 Switching, 17 Selectable Flash Patterns	191.00
	RS*03ZCR	TIR3™ Super-LED® with 25 Scan-Lock™ Flash Patterns and Synchronize Feature, For Horizontal Mounting, Amber, Blue, Red or White	98.00
	RV*03ZCR	TIR3™ Super-LED® with 25 Scan-Lock™ Flash Patterns and Synchronize Feature, For Vertical Mounting, Amber, Blue, Red or White	98.00
	RS*02ZCR	LIN3™ with 25 Scan-Lock™ Flash Patterns and Synchronize Feature, For Horizontal Mounting, Amber, Blue, Red or White	98.00
	RFLANGCD	Deep, Chrome-Plated Mounting Flange for TIR3™ and/or LIN3™ Lightheads	16.50
	RFLANG2B	Black, Dual Surface Mount Flange Kit for Two TIR3™ and/or LIN3™ Lightheads	14.50
	RFLANG2C	Chrome-Plated, Dual Surface Mount Flange Kit for Two TIR3™ and/or LIN3™ Lightheads	19.50
	RBKTHD1	Harley-Davidson®, 2008-2017 Road King®, Side Cowl Mounting Bracket Kit, for use with 1 Lighthead, Stainless Steel, Includes RFLANGEC, Each	19.50
	RBKTHD2	Harley-Davidson®, 2008-2017 Road King®, Side (Saddle Bag) Crash Bar Mounting Bracket Kit, for use with Two LINZ6™, RS TIR3™s and/or LIN3™s, Stainless Steel, Includes RFLANG2C. Each	33.50
	RBKTHD3	Harley-Davidson®, 2008-2017 Road King®, Rear (Saddle Bag) Crash Bar Mounting Bracket Kit, for use with Two LINZ6™, RS TIR3™s and/or LIN3™s, Stainless Steel, Includes RFLANG2C. Each	39.00
	RBKTHD3D	Harley Davidson®, 2008-2017 Road King®, Rear (Saddle Bag) Crash Bar Mounting Bracket Kit, for use with 4 TIR3™, LINZ6™ and/or LIN3™ Lightheads, Stainless Steel, Includes 2 RFLANG2C, Each	77.00
††	RBKTHD4L	Harley-Davidson®, 2008-2017 Road King®, Under Radio Box Mounting Bracket Kit (When Used with Whelen® Boxes Only), for use with One LINZ6™, RS TIR3™ or LIN3™, Stainless Steel, Includes RFLANGEC, Road Side, Each	19.50
††	RBKTHD4R	Harley-Davidson®, 2008-2017 Road King®, Under Radio Box Mounting Bracket Kit (When Used with Whelen® Boxes Only), for use with One LINZ6™, RS TIR3™ or LIN3™, Stainless Steel, Includes RFLANGEC, Curb Side, Each	19.50

††	RBKTHD5	Harley-Davidson®, 2008-2017, (FLHP Road King® Only) Under Headlight Mounting Bracket Kit, for use with One LINZ6™, RS TIR3™ or LIN3™, Stainless Steel, Includes RFLANGEC, Each	27.50
††	RBKTHD6	Harley-Davidson®, Road King® 2008-2017, Passing/Fog Light Mounting Bracket Kit, for use with One LINZ6™, RS TIR3™ or LIN3™, Stainless Steel. Each	23.50
	RBKTHD7	2014-2017 Harley-Davidson® Electra-Glide® Passing/Fog 90° Mount Kit for use with 1 LINZ6™, LINZV™, TIR3™ or LIN3™ Lightheads, Stainless Steel, Each	28.00
	RBKTHD8	2014-2017 Harley-Davidson® Electra-Glide® Passing/Fog 90° and 45° Mount Kit for use with 2 LINZ6™, LINZV™, TIR3™ or LIN3™ Lightheads, Stainless Steel, Each	45.00
	RBKTHD9	2014-2017 Harley-Davidson® Rear (Saddle Bag) Crash Bar Mounting Bracket Kit, for use with 2 Lightheads, Stainless Steel, Includes RFLANG2C, Each	40.00
	IONHD1R	2014-2017 Harley Davidson® Road King® and Electra-Glide® Surface Mount ION™ Under Radio Box Mount Kit, Black, Curb Side, for use with 1 ION™ or IONV™ Lighthead	24.00
	IONHD1L	2014-2017 Harley-Davidson® Electra-Glide® and Road King® Surface Mount ION™ Under Radio Box Mount Kit, Black, Street Side, for use with 1 ION™ or IONV™ Lighthead	24.00
	M2KTHD1	2014-2017 Harley-Davidson® Electra-Glide® and Road King® M2 Series License Plate Bracket, Black, for use with 2 M2 Lightheads	36.00
	2F*00Z*R	Flat Lens, Super-LED®, Syncronizable, Amber, Blue, Red or White	190.00
	WPA112	Waterproof 100 Watt Siren Amplifier	457.00
	WPA1	Full Function Control Head Only, Weather Resistant for WPA Amp, Includes a 7-1/2' Cable, for Handlebar and Surface Mounting (Motorcycle)	434.00
	WSMIC321	Microphone for WS321	150.00
	WS321B14	WS321 Siren Amplifier Mounting Only, Black for 2014-2017 Harley Davidson® Road King® and Electra-Glide®	58.00
	ALPHASL	Remote Siren, for use with Remote Switches (Purchased Separately), Selectable Four Tone Hands-Free Siren, For One or Two 100 Watt Speakers	253.00
	BETA112R	Full Function Remote Siren, for use with Remote Switches (Purchased Separately), For a One or Two 100 Watt Speakers	255.00
	BETA2	Full Function Control Head Only, Weather Resistant, 20 Ft. Cable, Surface Mount	402.00
	WSSMSW3	Motorcycle Switch, 3-Functions for Siren, Air Horn and Lighting (5 amp Max)	93.00
	SA350M	Motorcycle Siren Speaker, 100 Watts (Due to surcharges from our supplier on the rare earth materials used in the neodymium magnets found in speaker drivers, we reserve the right to adjust the pricing and/or add surcharges on all models that utilize this rare material, without notice.)	612.00

Motorcycle Systems
Choose the Motorcycle Box Opening Preference, Lighting Package and Options.

Motorcycle System, Includes Black Box, 2014-2017 Harley Police Package, Separation Plate, Strip-Lite™ LED Brake/Tail/Turn, Flasher, Terminal Block with Fuses and 12 VDC Receptacle.

††	M4B6R	Motorcycle Box Configured with Six M4 Series, Right-Hand (Curb Side) Opening	3482.00
††	M4B6L	Motorcycle Box Configured with Six M4 Series, Left-Hand (Road Side) Opening	3517.00
††	M4B6B	Motorcycle Box Configured with Six M4 Series, Rear Opening	3517.00
	MBADPT14	Adapter Plate for the Rear Box, 2014-2017 Road King® or Electra Glide®	111.00

Motorcycle System Box Lighting Package Options for Above, No Charge when Purchased with M4B6 Motorcycle System. For White Super-LED® Lightheads, Contact Factory for Pricing and Availability.

††	M4******	Six M4 Series Over/Under Single Color Super-LED® Modules, Red, Blue and/or Amber, for M4B6 System Only	
††	M4######	Six M4 Series Over/Under Dual Color Super-LED® Modules, Red, Blue and/or Amber, for M4B6 System Only	

Options for Motorcycle Systems

††	2E*00Z*R	Extended Lens, Super-LED® Fairing Light, Amber, Red or Blue, Each	190.00
††	M4BSEP	Substitute Separation Plate with Battery Hole for Standard Solid Plate, Includes Battery Hold Downs, for M4B6 Series	145.00
††	M1BATT	Motorcycle Battery, Requires Appropriate Separation Plate, Purchased Separately	368.00
††	M4B6CHRG	Battery Charger Includes 115 VAC Receptacle, for M4B6R System Only, Factory Installed ONLY	399.00
††	M1GROUND	Ground Plane	16.50
††	SA350MH	100 Watt Siren Speaker for Harley-Davidson® Wiring Harness (Due to surcharges from our supplier on the rare earth materials used in the neodymium magnets found in speaker drivers, we reserve the right to adjust the pricing and/or add surcharges on all models that utilize this rare material, without notice.)	695.00
	SA350MB1	Speaker Bracket for the SA350M/SA350MH, 2009-2017 Road King® and Electra-Glide®	64.00
	WS321	100 Watt Siren for Harley-Davidson® Wiring Harness	604.00
	WSMIC321	Microphone for WS321	150.00
	M05ZB	Windshield Light Array for 2007-2017 Harley-Davidson® Road King®. Five Blue LINZ6™s	767.00
	M05ZJ	Windshield Light Array for 2007-2017 Harley-Davidson® Road King®. Five LINZ6™s, Blue Outboard and Center and Two Red in the Center Sections	767.00
	M05ZJ2	Windshield Light Array for 2007-2017 Harley-Davidson® Road King®. Five LINZ6™s, Red Outboard and Center and Two Blue in the Center Sections	767.00
	M05ZR	Windshield Light Array for 2007-2017 Harley-Davidson® Road King®. Five Red LINZ6™s	767.00
	M06MB	Windshield Light Array for 2014-2017 Harley-Davidson® Electra-Glide®. Five Blue Micron's™	767.00
	M06MJ	Windshield Light Array for 2014-2017 Harley-Davidson® Electra-Glide®. Five Micron's™, Blue Outboard and Center and Two Red in the Center sections	767.00

All models are 12 Volt D.C. only unless otherwise noted above. For other voltages contact factory.
***** Replace symbol in model number with letter indicating lens color or LED color desired: **A** = Amber; **B** = Blue; **C** = Clear/White; **R** = Red; **G** = Green
# Replace symbol in model number with letter indicating SPLIT lens or LED color desired: **D** = Red/Clear or White; **E** = Blue/Clear or White; **F** = Amber/Clear or White; **H** = Green/Clear or White, **J** = Red/Blue; **K** = Red/Amber; **L** = Red/Green; **M** = Blue/Amber **†** (to be discontinued, check availability) (special order, check availability, non-returnable, non-cancelable)
! Indicate length desired: 5 foot, 6 foot, 7 foot or 8 foot **$** Indicates Lower Price

↓ †† - Special Order, Non-Returnable, Non-Cancelable. See "Made-To-Order" Statement on Table of Contents Page of this Price List.

	MODEL	DESCRIPTION	LIST
	M06MJ2	Windshield Light Array for 2014-2017 Harley-Davidson® Electra-Glide®. Five Micron's™, Red Outboard and Center and Two Blue in the Center sections	767.00
	M06MR	Windshield Light Array for 2014-2017 Harley-Davidson® Electra-Glide®. Five Red Micron's™	767.00

Switches And Control Boxes

Power Control Centers and Switches

	WCC9	WeCan® Controller, 3 Position Slide and 6 Push Buttons, for Justice® and Freedom® WeCan® Lightbars Only (Not for use with DUO™, TRIO™ and Legacy® Lightbars)	298.00
	WCC92	WeCan® Controller, 3 Position Slide and 6 Push Buttons, for Liberty™ II SOLO™ and DUO™ WeCan®, Legacy® and Freedom® IV Series Only	298.00
	WCC9SM	Pedestal/Swivel Mount for WCC9 Series Control Head	41.00
	PCC8R	8 Position Key Pad with Remote Relay Module, Three 20 Amp and Five 10 Amp Relays	335.00
	PCCS9RW	Switch Control for Standard Switching	271.00
	PCCS9LW	Programmable Switch Control for Liberty™ II & Freedom® IV Lightbars (Low Current Switching)	266.00
	PCC4W	Switch Box with Four 25 AMP SPST Switches, Lighted	125.00
	PCC6W	Switch Box with Six 25 AMP SPST Switches, Lighted	174.00
	PCC6W1	Similar to PCC6W, Except Last On/Off Switch is Replaced with a Momentary Switch	164.00
	PCC10W	Switch Box with Ten 25 AMP SPST Switches, Lighted	204.00
	PCC10W1	Similar to PCC10W, Except Last On/Off Switch is Replaced with a Momentary Switch	204.00
	1SWITCH	1 Switch Bracket Only, Switch Purchased Separately	39.00
	2SWITCH	2 Switch Bracket Only, Switches Purchased Separately	69.00
	3SWITCH	3 Switch Bracket Only, Switches Purchased Separately	97.00
	4SWITCH	4 Switch Bracket Only, Switches Purchased Separately	132.00
	PC1	PC-1 Switch, Lighted SPST, 15 AMP Contacts	23.50
	PC2	PC-2 Switch, Momentary SPST, 15 AMP Contacts	24.50
	PC3	PC-3 Switch, Lighted SPDT, 15 AMP Contacts	43.00

Siren Amplifiers, Amplifiers & Airhorns

Howler™ Low Frequency Tone Siren, Includes Siren Amplifier and Speaker(s), Works in Conjunction with Existing Siren Systems Purchased Separately.

	HWLUNI	Siren Amplifier with One Speaker, Includes Universal Mounting Bracket	604.00
	HWLCC11	Siren Amplifier with One Speaker, Includes Mounting Bracket for 2012-2017 Chevy Caprice	604.00
	HWLDC15	Siren Amplifier with One Speaker, Includes Mounting Bracket for 2015-2017 Dodge Charger	604.00
	HWLFT11	Siren Amplifier with One Speaker, Includes Mounting Bracket for 2013-2017 Ford Police Interceptor	604.00
	HWLFE13	Siren Amplifier with One Speaker, Includes Mounting Bracket for 2013-2017 Ford Police Interceptor Utility with Fog Lights	604.00
	HOWLER	Siren Amplifier with Two Speakers, Optional Vehicle Specific Mounting Brackets, No Charge When Purchased with Howler System	755.00
	HWLRB2	† Howler Mounting Bracket For 2008-2017 Ford Expedition	0.00
	HWLRB4	Howler Mounting Bracket For 2008-2016 Ford E-Series	0.00
	HWLRB7	Howler Mounting Bracket For 2008-2016 Chevy Impala	0.00
††	HWLRB11	Howler Mounting Bracket for 2011-2016 Chevy Express G-Series	0.00
	HWLRB13	Howler Mounting Bracket for 2013-2015 Ford Police Interceptor Utility, Driver Side Bracket Includes Built-in Mounting for a SA315P Speaker, 2016-2017 Ford Police Interceptor Utility without Fog Lights. If vehicle has fog lights, use HWLFE13	0.00
	HWLRB14	Howler Mounting Bracket For 2011-2016 Dodge 4500	0.00
	HWLRB18	† Howler Mounting Bracket For 2012-2016 Chevy 2500/3500 Silverado and Suburban	0.00
	HWLRB19	**NEW** Howler Mounting Bracket For 2014-2015 Silverado 1500	0.00
	HWLRB20	Howler Mounting Bracket for 2015-2016 Chevy Tahoe	0.00
	HWLRB21	Howler Mounting Bracket for 2013-2017 Ford Police Interceptor	0.00
	HWLRB22	Howler Mounting Bracket for 2011-2017 Ford F-250/F-350	0.00
	HWLRB23	Howler Mounting Bracket, Universal Mounting Brackets (Pair)	0.00

CenCom Carbide™, Remote Siren & Control Center and Options. Includes Built-in Traffic Advisor and Input Expansion Modules, Standard, 5 Year Warranty on Amplifier.

	CCSRNT4F	3 Section Control Head and 8 Push Buttons, 4-Position Slide Switch with a 7-Position Rotary Knob. Manual, Airhorn, Plus 3 Traffic Advisor Switches	1849.00
	CCSRNT4G	3 Section Control Head and 21 Push Buttons, 4-Position Slide Switch	1849.00
	CCSRN4DA	WeCan® External Amplifier, for use with CenCom Carbide™, for Dual Amplifier Applications	299.00

CenCom Sapphire™, Remote Siren & Control Center and Options, 5 Year Warranty on Amplifier.

	CCSRN3	3-Position Slide Switch and 18 Push Button Control Head with Amplifier Control Module with pigtails, Microphone with CCMICX20 Included	1396.00
	CCSRN35	3-Position Progressive Push Button Switches and 9 Push Button Hand Held Control Head with Amplifier Module with Pigtails, and CCMICX20 Included	1396.00
	CCSRN36	3 Section Control Head and 8-Push Buttons, 4-Position Slide Switch with a 7-Position Rotary Knob. Manual, Airhorn Plus 3 Traffic Advisor™ Switches	1396.00

	CCSRN3A	Same as CCSRN3, Except with 8 (Positive or Negative) Input Expansion Module (will not override any pre-existing control head features), 12 Total Inputs	1500.00
	CCSRN3F	Same as CCSRN36, Except with 8 (Positive or Negative) Input Expansion Module (will not override any pre-existing control head features), 12 Total Inputs	1500.00
	CCSRNTA3	Same as CCSRN3, with Traffic Advisor™ Module	1635.00
	CCSRNT35	Same as CCSRN35, with Traffic Advisor™ Module	1635.00
	CCSRNT36	Same as CCSRN36, With Traffic Advisor™ Module	1635.00
	CCSRNT3A	Same as CCSRNTA3, Except with 8 (Positive or Negative) Input Expansion Module (will not override any pre-existing control head features), 12 Total Inputs	1739.00
	CCSRNT3F	Same as CCSRNT36, Except with 8 (Positive or Negative) Input Expansion Module (will not override any pre-existing control head features), 12 Total Inputs	1739.00
	CCTRIM	Trim Ring Option, for Semi-Flush Mounting of Control Head	57.00
	295SSA & 295SDA Series, Remote Amplifier Sirens with Scan-Lock™ Siren Tones.		
	295SSA1	Single Tone Siren with Full Function Control Head	866.00
	295SSA2	**NEW** Single Tone Siren with Hand-Held Control Head	866.00
	295SDA1	Dual Tone Siren, For Two 100 Watt Speakers, with Full Function Control Head	926.00
	295SDA2	**NEW** Dual Tone Siren, For Two 100 Watt Speakers, with Hand-Held Control Head	926.00
	295SLS and 295HFS Hands-Free Sirens, with Diagnostix™ & SI TEST® (Except 295HFSA7). All 295HFS Models Have a 5 Year Warranty, Standard. For Removable Microphones, Hi/Low Tones and/or 24 Volts DC, Contact Factory for Exact Model Numbers, Price and Availability.		
	295SLSA1	Siren Amplifier with 17 Scan-Lock™ Siren Tones	453.00
	295HFS2	Remote Siren Amplifier (Flush Mount Head)	641.00
	295HFS2X	295HFS2 with Dual Amplifiers, Meets California Title 13 Requirements	1172.00
	295SLSA6	Single Unit Siren with 9-Switch Light Control and Standard Switching, with Park Kill & Timed Out Relay with 17 Scan-Lock™ Siren Tones	672.00
	295HFSA7	Remote Dual Siren Amplifier, with Flush Mount Control Head, Meets CA Title 13	912.00
	295HFSC9	Self-Contained 200 Watt Dual Full Function Siren, with Removable Microphone	728.00
	295HFSDA	Second Amplifier (Kit) for Dual Siren Amplifier Use (295HFS2 Only)	400.00
	295SL Series Sirens, Full Function Hands-Free Siren, with Scan-Lock™ Siren Tones.		
	295SL100	Full Function Siren (Up to Two 100 Watt Speakers) and Heavy-Duty Microphone, 12 VDC	392.00
	295SL101	Full Function (Up to Two 100 Watt Speakers) and Heavy-Duty Plug-in Microphone with Volume Control Knob, 12 VDC	451.00
	WPKM1	Park Kill Connection Modules, 30 Amp	64.00
	Alpha™ Siren Series		
	ALPHA12S	Self-Contained Siren, with Faceplate Switches, Selectable Four Tone Hands-Free Siren, For Single 100 Watt Speaker	288.00
	ALPHASL	Remote Siren, for use with Remote Switches (Purchased Separately), Selectable Four Tone Hands-Free Siren, For One or Two 100 Watt Speakers	253.00
	Optional Remote Switches for Alpha™ Siren Series,For ALPHASL Only.		
	ALPHA1	Single On/Off Switch for use with Hands-Free Operation	45.00
	ALPHA2	Single On/Off Hands-Free Activation Plus Momentary Switch for Air Horn	35.00
	ALPHA3	TONE 1/Off/TONE 2 Switch Operation Plus Momentary Switch for Air Horn	35.00
	ALPHA4	Three Switch Operation, One On/Off, One TONE 1/Hands-Free/TONE 2, One Momentary Switch for Airhorn	61.00
	ALPHA5	3 Position Toggle Switch, Controls 3 Siren Tones and other Warning Lights or Device Functions. Contacts Rated at 30 Amps	93.00
	Beta™ Siren Series, Selectable Siren Tone, Radio Repeat, Public Address and Options.		
	BETA112R	Full Function Remote Siren, for use with Remote Switches (Purchased Separately), For a One or Two 100 Watt Speakers	255.00
	BETA1	Full Function Control Head Only, with 15' Interconnect Harness	200.00
	BETA2	Full Function Control Head Only, Weather Resistant, with 20' Cable, Surface Mount	402.00
††	BETA2BKT	Mounting Bracket for BETA2 Only, Flange Mount	38.50
	BETAMIC	Remote Mic for use with BETA112R (for use with Customer-Supplied Switches)	152.00
	Epsilon™ Series Siren, Full Function Hands-Free with Diagnostix™ and 9 Scan-Lock™ Siren Tones.		
	EPSL1	Full Function 100 Watt with Microphone and Volume Control Knob, Includes CA Title 13 Compliant Tones	305.00
	EPSL2S6	Full Function (Up to Two 100 Watt Speakers). Microphone with Volume Control Knob, Includes CA Title 13 Compliant Tones and 6 Switches	442.00
	EPSL2S9	Full Function (Up to Two 100 Watt Speakers). Microphone with Volume Control Knob, Includes CA Title 13 Compliant Tones, 4 Position Slide Switch and 9 Switches	551.00
	HHS Series Sirens, Hand-Held Siren, With 9 Relays for Switching. Will Operate up to Two 100 Watt Speakers.		
	HHS2200	Siren Amplifier with Hand-Held Controller, Includes Programming Software	605.00
	Gamma™ Siren Series, 100 Watt, 16 Scan-Lock™ Siren Tones		
	GAMMA2	Hands-Free Siren with Two Auxiliary Switches	236.00
	Sirens, Waterproof & Options, (For Marine & Motorcycle Use).		
	WPA112	Waterproof Siren Amplifier, For a Single 100 Watt Speaker	457.00
	WPA1	Full Function Control Head Only, Weather Resistant, with a 7-1/2' Cable, for Handlebar and Surface Mounting (Motorcycle)	434.00
	BETA2BKT	Mounting Bracket for BETA2, WPA1 and WPA2 Only, Flange Mount	38.50
	WPA2	Full Function Control Head Only, Weather Resistant, 20' Cable, Surface Mount (Marine)	454.00

All models are 12 Volt D.C. only unless otherwise noted above. For other voltages contact factory.
***** Replace symbol in model number with letter indicating lens color or LED color desired: **A** = Amber; **B** = Blue; **C** = Clear/White; **R** = Red; **G** = Green
# Replace symbol in model number with letter indicating SPLIT lens or LED color desired: **D** = Red/Clear or White; **E** = Blue/Clear or White; **F** = Amber/Clear or White; **H** = Green/Clear or White, **J** = Red/Blue; **K** = Red/Amber; **L** = Red/Green; **M** = Blue/Amber **†** (to be discontinued, check availability) **††** (special order, check availability, non-returnable, non-cancelable)
! Indicate length desired: 5 foot, 6 foot, 7 foot or 8 foot **$** Indicates Lower Price

↓†† - Special Order, Non-Returnable, Non-Cancelable. See "Made-To-Order" Statement on Table of Contents Page of this Price List.

	MODEL	DESCRIPTION	LIST
	WPA3BM	Full Function Control Head with Waterproof Switches and Microphone Jack, 20' Cable, Bail Mount (Marine)	529.00
	WS321	Siren for Harley-Davidson® Wiring Harness, For a Single 100 Watt Speaker	604.00
	WSMIC321	Microphone for WS321	150.00
	Power Air Horn Series		
	PAH112	Air Horn Tone Only Siren, For a Single 100 Watt Speaker	216.00
	PAP112	Air Horn Tone Plus Public Address Siren, Includes Microphone, For a Single 100 Watt Speaker	271.00
	PAPEXT15	15' Microphone Extension Cable for PAP112 Only	30.00

Siren Amplifier & Speaker Combination

WSSC Series Siren, Combination Siren/Speaker, One Piece.

	WSSC30	30 Watt Siren and Speaker Combination	223.00
	WSSPA30	Same as WSSC30, Includes Public Address	332.00
	WSSC30HK	Harness Kit for Synchronization of two WSSC30s	41.00
	WSSMSW3	Motorcycle Switch, 3-Functions for Siren, Air Horn and Lighting (5 amp Max)	93.00

Siren Speakers, SA315 & SA314 Projector™ Series

100 Watt Bumper/Concealed/Flange Mounted Speakers. Due to surcharges from our supplier on the rare earth materials used in the neodymium magnets found in speaker drivers, we reserve the right to adjust the pricing and/or add surcharges on all models that utilize this rare material, without notice.

SP123BM Series, Bumper Mount Speaker

	SP123BMC	Bumper Mount, Chrome	397.00
	SA314 Series, Small Profile, Cast Aluminum Speaker, 6.4" H x 6.17" W x 3.14" D.		
††	SA314A	122dB Speaker, Natural Aluminum Finish	403.00
††	SA314B	122dB Speaker, Aluminum with Black Epoxy-Coated Finish	489.00
	Optional Mounting Brackets for SA314 Series		
††	SABKT1	Chevy Suburban/Tahoe, 2004-2006, Universal	41.00
††	SABKT9	Universal/Swivel Bail Type Mount Bracket	41.00
††	SABKT21	Chevy Impala, 2006-2016	41.00
††	SABKT24	Chevy Suburban and Chevy Tahoe, 2007-2013	41.00

SA315 Series, Small Round Profile, Composite Speaker, 6.5" H x 6.5" W x 2.9" D.

	SA315P	123dB Speaker, Nylon Composite	328.00
	Optional Mounting Brackets for SA315 Series		
	SAK9	Heavy-Duty Universal/Swivel Bail Type Mounting Bracket	41.00
	SAK45	Chevy Caprice, 2011-2017	41.00
	SAK25	Chevy Express Van, 2006-2016	41.00
	SAK34	Chevy Impala, 2006-2016, Howler Compatible	41.00
	SAK46	Chevy Impala, 2012-2016	41.00
	SAK50	Chevy Silverado 1500 / GMC 1500, 2014-2016, Driver Side	41.00
	SAK49	Chevy Silverado 1500 / GMC 1500, 2014-2016, Passenger Side	41.00
	SAK1	Chevy Suburban/Tahoe, 2004-2006, Universal	41.00
††	SAK24	Chevy Suburban, Tahoe and Silverado, 2007-2013	41.00
††	SAK5	Chevy Suburban/Tahoe, 2000-2003, Chevrolet Avalanche, 2002-2009, GMC Envoy, 2004-2011	41.00
	SAK56	Chevy Suburban/Tahoe, 2015-2016, Driver Side	41.00
	SAK55	Chevy Suburban/Tahoe, 2015-2016, Passenger Side	41.00
	SAK42	Dodge 4500, 2011-2016, Passenger Side	41.00
	SAK43	Dodge 4500, 2011-2016, Driver Side	41.00
	SAK37	Dodge Charger, 2011-2017	41.00
	SAK54	Dodge Durango, 2013-2017	41.00
	SAK48	Dodge Ram 1500, 2012-2017, Driver Side	41.00
	SAK47	Dodge Ram 1500, 2012-2017, Passenger Side	41.00
	SAK32	Ford E350/E450, 2008-2016, Driver or Passenger Side	41.00
	SAK23	Ford Expedition, 2007-2017	41.00
	SAK44	Ford Police Interceptor Utility, 2013-2017	41.00
	SAK52	Ford Police Interceptor Utility, 2013-2017, Driver Side Lower Grille	41.00
	SAK51	Ford Police Interceptor Utility, 2013-2017, Passenger Side Lower Grille	41.00
	SAK57	Ford F-150, 2015-2017	41.00
	SAK41	Ford F-250/F-350, 2011-2016, Driver Side	41.00
	SAK40	Ford F-250/F-350, 2011-2016, Passenger Side	41.00
	SAK38	Ford Fusion, 2010-2012	41.00
	SAK53	Ford Fusion, 2013-2016	41.00
	SAK59	**NEW** Ford Fusion, 2017	41.00
	SAK58	Ford Police Interceptor Sedan, 2013-2017	41.00
	SAK60	**NEW** Toyota Tacoma, 2016-2017	41.00

Siren Speakers, Other

100 Watt and Accessories, Due to surcharges from our supplier on the rare earth materials used in the neodymium magnets found in speaker drivers, we reserve the right to adjust the pricing and/or add surcharges on all models that utilize this rare material, without notice.

Single and Dual Speaker, for Ambulances, 100 Watt or 200 Watt.

††	SA31I01P	UnderPro™ Single Speaker for International 4300/4400 Series, 2001-2017, Passenger Side	479.00
††	SA31I01D	UnderPro™ Single Speaker for International 4300/4400 Series, 2001-2017, Driver Side	479.00
	SPT5D	Bumper Mount Speaker for 2015-2017 Ford Transit, Driver Side	407.00
	SPT5P	Bumper Mount Speaker for 2015-2017 Ford Transit, Passenger Side	407.00
	SPT5TEMP	**NEW** Speaker Templates, Reusable, for 2015-2017 Ford Transit, Includes Driver Side and Passenger Side	45.00
	SPTWI*	Wide Angle ION™ with mounting bracket for SPT5D or SPT5P, Red, Blue or Amber, Each	193.00

Speakers, Siren

	SA340TS	SA-340TS	367.00
	SA340STS	SA-340STS	384.00
	SA350M	Motorcycle Siren Speaker, 100 Watts	612.00
	SA350MB1	Speaker Bracket for the SA350M/SA350MH, 2009-2017 Road King® and Electra Glide®	64.00

Replacement Speaker Drivers

††	SD210RX	Replacement 100 Watt Speaker Driver for SA314 Series	296.00
††	SD370	Replacement 100 Watt Speaker Driver with Adapter	296.00
††	SD210R	Replacement 100 Watt Speaker Driver for SA370, SA1412 & SA1515	296.00

Back-Up Alarms, Electronic

Back-Up Alarms

	WBUA107	Back-Up Alarm, 107dB, 12-24 VDC	58.00
	WBUA97	Back-Up Alarm, 97dB, 12-24 VDC	48.00
	WBUA112	Back-Up Alarm, 87-112dB, 12-24 VDC, Self-Adjusting	120.00
	WBUA112C	Back-Up Alarm, 112 dB, 12-24 VDC	80.00

Safety Site™ & Emitters

GTT Opticom™ Emitters

††	795H	Self-Contained Opticom™ IR LED Emitter for Freedom®. Freedom® IV, Liberty™ II and 4500 Series Lightbars, Factory Installed Only	1710.00

Safety Site™, Super-LED® Traffic Control Light.

	W20SSRK	5 Red Module Kit, Includes Carrying Bag	516.00
	W20SS	Red Module, Each	97.00

Traffic Advisor™ Series & Accessories

All Models include Control Head for Light Array (Unless Specified), Programmable Flash Patterns Standard on TACTL5, allows for Remote Activation of the "Flash Pattern" and End Lamp Enable/Disable Feature.

Dominator™ Traffic Advisor™, TIR3™ Super-LED® Low Profile, Control Head Optional, 1.74" High x 2.17" Deep Housing, Three Super-LED®s Per Panel.

	TAD6	Six Lamp TIR3™ Super-LED® Traffic Advisor™, 23.36" Long, Less Control Head	558.00
	TAD8	Eight Lamp TIR3™ Super-LED® Traffic Advisor™, 30.36" Long, Less Control Head	697.00
††	TAD8**	Eight Lamp TIR3™ Super-LED® Traffic Advisor™ with Two End Flashing LEDs, Blue, Red and/or Amber, 30.36" Long, Less Control Head	708.00

Dominator™ Plus Traffic Advisor™, LINZ6™ Super-LED® Low Profile , Control Head Optional. 1.74" High x 2.17" Deep Housing, Six Super-LEDs® Per Lamp.

	TADP6	Six Lamp LINZ6™ Super-LED® Traffic Advisor™, 23.26" Long, Less Control Head	958.00
	TADP8	Eight Lamp LINZ6™ Super-LED® Traffic Advisor™, 30.36" Long, Less Control Head	1249.00
††	TADP8**	Eight Lamp, Six Lamp LINZ6™ Super-LED® Traffic Advisor™ with Two End Flashing LEDs, Blue, Red and/or Amber, 30.36" Long, Less Control Head	1265.00
††	TADP8FT	Eight Lamp LINZ6™ Super-LED® Traffic Advisor™, 37.37" Long, Includes Rear Deck Mounting for 2013-2017 Ford Police Interceptor	1286.00

Traffic Advisor™, TIR3™, Super-LED®, 1.74" High x 2.17" Deep Housing, Three Super-LEDs® Per Panel.

	TAM63	Six Lamp TIR3™ Super-LED® Traffic Advisor™, 23.26" Long	734.00
	TAM83	Eight Lamp TIR3™ Super-LED® Traffic Advisor™, 30.36" Long	896.00
††	TAM83**	Eight Lamp TIR3™ Super-LED® Traffic Advisor™, 30.36" Long, with Two End Flashing LEDs, Blue, Red and/or Amber	906.00

Traffic Advisor™, LINZ6™, Super-LED®, 1.74" High x 2.17" Deep Housing, Six LED's Per Panel.

	TAZ66	Six Lamp LINZ6™ Super-LED® Traffic Advisor™, 23.26" Long	1101.00
	TAZ86	Eight Lamp LINZ6™ Super-LED® Traffic Advisor™, 30.36" Long	1404.00
††	TAZ86**	Eight Lamp, Six Lamp LINZ6™ Super-LED® Traffic Advisor™ with Two End Flashing Super-LEDs®, Red, Blue and/or Amber, 30.36" Long	1419.00

Traffic Advisor™, 5mm LED Low Profile, 2.84" High x 2.25" Deep "C" Style Housing. Now with Waterproof Connecters Standard.

	TAL65	Six Lamp LED Traffic Advisor™, 36" Long	815.00
	TAL85	Eight Lamp LED Traffic Advisor™, 46.82" Long	1019.00

Traffic Advisor™, Front Load, Super-LED®, 2.35" High x 2.38" Deep Housing.

	TANF65	Six Lamp Linear-LED® Traffic Advisor™, 34" Long	1024.00

All models are 12 Volt D.C. only unless otherwise noted above. For other voltages contact factory.

***** Replace symbol in model number with letter indicating lens color or LED color desired: **A** = Amber; **B** = Blue; **C** = Clear/White; **R** = Red; **G** = Green

Replace symbol in model number with letter indicating SPLIT lens or LED color desired: **D** = Red/Clear or White; **E** = Blue/Clear or White; **F** = Amber/Clear or White; **H** = Green/Clear or White, **J** = Red/Blue; **K** = Red/Amber; **L** = Red/Green; **M** = Blue/Amber **†** (to be discontinued, check availability) (special order, check availability, non-returnable, non-cancelable)

! Indicate length desired: 5 foot, 6 foot, 7 foot or 8 foot **$** Indicates Lower Price

↓†† - Special Order, Non-Returnable, Non-Cancelable. See "Made-To-Order" Statement on Table of Contents Page of this Price List.

	MODEL	DESCRIPTION	LIST
	TANF85	Eight Lamp Linear-LED® Traffic Advisor™, 45.12" Long	1197.00
††	TANF85**	Six Lamp Linear-LED® Traffic Advisor™ with Two End Flashing Super-LED®s, Blue, Red and/or Amber, 45.12" Long	1210.00
	TACF85	Eight Lamp CON3™ Super-LED® Traffic Advisor™, 45.12" Long	971.00
††	TACF85**	Eight Lamp CON3™ Super-LED® Traffic Advisor™ with 2 End Flashers, Red, Blue and/or Amber, 45.12" Long	982.00
	TANBKT1	Mounting Bracket, for top of Vehicle (Horizontal) Mounting	23.50
	Traffic Advisor™, Front Load, DUO™ Super-LED®, 2.35" High x 2.38" Deep Housing, No Control Head Required.		
	TADF6	Six DUO™ Color Linear Super-LED® Traffic Advisor™, Requires No Special Control Head, 37" Long	1671.00
	TADF8	Eight DUO™ Color Linear Super-LED® Traffic Advisor™, Requires No Special Control Head, 45.12" Long	1791.00
	TDP§§§00	Six or Eight DUO™ Super-LED® Modules, No Charge when Ordered with DUO™ Traffic Advisor™, Replace Symbol §§§ with Number of Warning LED Colors, Order Red/Blue/Amber.	
	Traffic Advisor™, TIR6™ Super-LED® Low Profile, 2.84" High x 2.25" Deep Housing, Six Super-LED®s Per Panel. Now with Waterproof Connectors Standard.		
	TAM65	Six Lamp Super-LED® Traffic Advisor™, 36" Long	1210.00
	TAM85	Eight Lamp Super-LED® Traffic Advisor™, 46.82" Long	1498.00
††	TAM85**	Six Lamp Super-LED® Traffic Advisor™ with Two End Flashing Super-LED®s, Blue, Red and/or Amber, 46.82" Long	1508.00
	Traffic Advisor™, TAC8 Super-LED®, 2" High x 2.64" Deep "C" Style Housing x 47.75" Length, Control Head Included		
	TAC815	Eight Lamp Super-LED® Traffic Advisor™, with 15' Cable	825.00
	TAC830	Eight Lamp Super-LED® Traffic Advisor™, with 30' Cable	909.00
	TAC850	Eight Lamp Super-LED® Traffic Advisor™, with 50' Cable	1015.00
	Traffic Advisor™, Arrow Head Style, Halogen & LED Models, Includes TACTL6 Control Head Unless Noted.		
††	TA166AL5	600 Series, 16 LED Lamps, One Piece	4515.00
	Traffic Advisor™, Front Load, Arrow Head Style, Linear™ Super-LED®, 3.5" Deep x 46" Long, Includes TACTL6		
††	TA165NF1	Sixteen Lamp, 23" High with 25' Cable	2586.00
††	TA165NF2	Sixteen Lamp 23" High with 50' Cable	2738.00
††	TA125NF1	Twelve Lamp 15" High with 25' Cable	2177.00
††	TA125NF2	Twelve Lamp 15" High with 50' Cable	2328.00
	Traffic Advisor™ Accessories		
	TACTL5	Control Head Only, Programmable for 6 or 8 Lamp Halogen or LED Traffic Advisor™. Includes Auxiliary On/Off Switch. (Replaces TACTLD1 and TACTRL1A)	420.00
	TACTL6	Control Head Only, Programmable for 16 Lamp Halogen or LED Traffic Advisor™. Includes Auxiliary On/Off Switch. Meets Federal Standards. (Replaces TACTRL3A)	420.00
	TADCTL1	TAD/TADP Series Control Head Only	136.00
	TADSW1	On/Off Non-Lighted, SPDT 20 Amp Switch, for TACTL5	16.50
	TADSW2	On/Off/On Non-Lighted, SPDT 20 Amp Switch, for TACTL5	16.50
	DELTAC5	**NEW** Delete TACTL5 from 6 to 8 Light LED or Halogen Traffic Advisor™ - DEDUCT	100.00
	DELTAC6	**NEW** Delete TACTL6 from 16 Lamp LED or Halogen Traffic Advisor™- DEDUCT	100.00

Tracer™ Series

Tracer™ Series, Super-LED® Light Array, SOLO™, DUO™ or TRIO™ Versions Available in a 1 to 6 Lamp Unit. Lightheads and mounting ordered as Separate Line items.

	TCRHS1	1 Lamp Housing and TCRL* SOLO™ Lighthead. "L" Bracket Mounting (2 Required) Purchased Separately	349.00
	TCRHS2	2 Lamp Housing and TCRL* SOLO™ Lightheads. "L" Bracket Mounting (3 Required) Purchased Separately	535.00
	TCRHS3	3 Lamp Housing and TCRL* SOLO™ Lightheads. "L" Bracket Mounting (4 Required) Purchased Separately	715.00
	TCRHS4	4 Lamp Housing and TCRL* SOLO™ Lightheads. "L" Bracket Mounting (5 Required) Purchased Separately	889.00
	TCRHS5	5 Lamp Housing and TCRL* SOLO™ Lightheads. "L" Bracket Mounting (6 Required) or Vehicle Specific Mounting Purchased Separately	1075.00
	TCRHS6	6 Lamp Housing and TCRL* SOLO™ Lightheads. "L" Bracket Mounting (7 Required) or Vehicle Specific Mounting Purchased Separately	1255.00
	TCRL*	SOLO™ Lighthead, Red, Blue, Amber, or White. No Charge When Ordered with the Appropriate Housing	
	TCRHD1	1 Lamp Housing and TCRL** DUO™ Lighthead. "L" Bracket Mounting (2 Required) Purchased Separately	399.00
	TCRHD2	2 Lamp Housing and TCRL** DUO™ Lightheads. "L" Bracket Mounting (3 Required) Purchased Separately	635.00
	TCRHD3	3 Lamp Housing and TCRL** DUO™ Lightheads. "L" Bracket Mounting (4 Required) Purchased Separately	865.00
	TCRHD4	4 Lamp Housing and TCRL** DUO™ Lightheads. "L" Bracket Mounting (5 Required) Purchased Separately	1089.00

	TCRHD5	5 Lamp Housing and TCRL** DUO™ Lightheads. "L" Bracket Mounting (6 Required) or Vehicle Specific Mounting Purchased Separately	1325.00
	TCRHD6	6 Lamp Housing and TCRL** DUO™ Lightheads. "L" Bracket Mounting (7 Required) or Vehicle Specific Mounting Purchased Separately	1555.00
	TCRL**	DUO™ Lighthead, Red, Blue, Amber and/or White. No Charge When Ordered with the Appropriate Housing	
	TCRHT1	1 Lamp Housing and TCRL*** TRIO™ Lighthead. "L" Bracket Mounting (2 Required) Purchased Separately	449.00
	TCRHT2	2 Lamp Housing and TCRL*** TRIO™ Lightheads. "L" Bracket Mounting (3 Required) Purchased Separately	735.00
	TCRHT3	3 Lamp Housing and TCRL*** TRIO™ Lightheads. "L" Bracket Mounting (4 Required) Purchased Separately	1015.00
	TCRHT4	4 Lamp Housing and TCRL*** TRIO™ Lightheads. "L" Bracket Mounting (5 Required) Purchased Separately	1289.00
	TCRHT5	5 Lamp Housing and TCRL*** TRIO™ Lightheads. "L" Bracket Mounting (6 Required) or Vehicle Specific Mounting Purchased Separately	1575.00
	TCRHT6	6 Lamp Housing and TCRL*** TRIO™ Lightheads. "L" Bracket Mounting (7 Required) or Vehicle Specific Mounting Purchased Separately	1855.00
	TCRLRBC	TRIO™ Lighthead, Red/Blue/White. No Charge When Ordered with the Appropriate Housing	

Options for Tracer™ Series, All SUVs and Pick Up Trucks must have Factory Running Boards.

	TCRB35	2015-2017 Dodge Charger Mounting Kit, for 5 Lamp Tracer™, Each	39.00
	TCRB44	**NEW** 2015-2017 Dodge Durango, Running Board Mounting Kit, for 5 Lamp Tracer™, Each	40.00
	TCRB42	**NEW** 2015-2017 Dodge Ram 1500 Crew Cab, Running Board Mounting Kit, for 6 Lamp Tracer™, Each	48.00
	TCRB37	2015-2017 Chevy Caprice Mounting Kit, for 5 Lamp Tracer™, Each	40.00
	TCRB46	2015-2016 Chevy Impala PPV Mounting Kit, for 5 Lamp Tracer™, Each	40.00
	TCRB45A	**NEW** 2015-2016 Chevy Silverado 1500 Crew Cab, Running Board Mounting Kit, for 6 Lamp Tracer™, Each	75.00
	TCRB45	2009-2017 Chevy Tahoe Running Board Mounting Kit, for 5 Lamp Tracer™, Each	48.00
	TCRB47	2015-2017 Ford F-150 SuperCrew Running Board Mounting Kit, for 6 Lamp Tracer™, Each	85.00
	TCRB39	**NEW** 2015-2016 Ford F-250/F-350 Crew Cab, Running Board Mounting Kit, for 6 Lamp Tracer™, Each	39.00
	TCRB38	2013-2017 Ford Police Interceptor Sedan Mounting Kit, for 5 Lamp Tracer™, Each	48.00
	TCRB34	2013-2017 Ford Police Interceptor Utility Running Board Mounting Kit, for 5 Lamp Tracer™, Each	40.00
	TCRLBKT	1 "L" Bracket and Hardware, See Tracer™ Description for Quantity Required	10.50

Century™ Series Mini Lightbars

Century™ Series LED Mini Lightbars with Aluminum Base with Color Outer Dome, Unless Specified

	MC11P*	11", Permanent Mount, Amber, Blue or Red	369.00
	MC11M*	11", Magnetic Mount, Amber, Blue or Red	369.00
	MC11S*	11", Stud Mount, Amber, Blue or Red	361.00
	MC16P*	16", Permanent Mount, Amber, Blue or Red	389.00
	MC16M*	16", Magnetic Mount, Amber, Blue or Red	412.00
	MC16V*	16", Magnetic/Suction Mount, Amber, Blue or Red	445.00
	MC16S*	16", Stud Mount, Amber, Blue or Red	412.00
	MC16PJ	16", Permanent Mount, Driver Side Red, Passenger Side Blue with Clear Dome	389.00
	MC16MJ	16", Magnetic Mount, Driver Side Red, Passenger Side Blue with Clear Dome	412.00
	MC16VJ	16", Magnetic/Suction Mount, Driver Side Red, Passenger Side Blue with Clear Dome	445.00
	MC16SJ	16", Stud Mount, Driver Side Red, Passenger Side Blue with Clear Dome	402.00
	MC16PF	16", Permanent Mount, Driver Side Amber, Passenger Side White with Clear Dome	403.00
	MC16MF	16", Magnetic Mount, Driver Side Amber, Passenger Side White with Clear Dome	427.00
	MC16VF	16", Magnetic/Suction Mount, Driver Side Amber, Passenger Side White with Clear Dome	434.00
	MC16SF	16", Stud Mount, Driver Side Amber, Passenger Side White with Clear Dome	402.00
	MC23P*	23", Permanent Mount, Amber, Blue or Red	567.00
	MC23M*	23", Magnetic Mount, Amber, Blue or Red	592.00
	MC23V*	23", Magnetic/Suction Mount, Amber, Blue or Red	612.00
	MC23S*	23", Stud Mount, Amber, Blue or Red	592.00

Mini Legacy™, Super-LED® Series Lightbars

Mini Legacy™ GT9 Series Lightbars, 19.31" Long, Includes Four Linear Super-LED® Corner Modules

	GT9****P	Permanent Mount with 15' Cable, Amber, Blue, Red or White	1386.00
	GT9****M	Magnetic Mount with Cigar Cord, Amber, Blue, Red or White	1386.00
	GT9****V	Magnetic/Suction Mount with Cigar Cord, Amber, Blue, Red or White	1488.00
	GSDS*	One Short Super-LED® Single Color Amber, Blue, Red or White	83.00
	GTTS	Two Short Super-LED® Take-Down Lights, For Permanent Mount Only	148.00
	GTA	Two Super-LED® Alley Lights, For Permanent Mount Only	148.00
	GTTSA	Two Short Super-LED® Take-Down and Alley Lights, For Permanent Mount Only	285.00

All models are 12 Volt D.C. only unless otherwise noted above. For other voltages contact factory.
***** Replace symbol in model number with letter indicating lens color or LED color desired: **A** = Amber; **B** = Blue; **C** = Clear/White; **R** = Red; **G** = Green
# Replace symbol in model number with letter indicating SPLIT lens or LED color desired: **D** = Red/Clear or White; **E** = Blue/Clear or White; **F** = Amber/Clear or White; **H** = Green/Clear or White, **J** = Red/Blue; **K** = Red/Amber; **L** = Red/Green; **M** = Blue/Amber **†** (to be discontinued, check availability) (special order, check availability, non-returnable, non-cancelable)
! Indicate length desired: 5 foot, 6 foot, 7 foot or 8 foot **$** Indicates Lower Price

↓ †† - Special Order, Non-Returnable, Non-Cancelable. See "Made-To-Order" Statement on Table of Contents Page of this Price List.

	MODEL	DESCRIPTION	LIST
	Mini Liberty™ II SOLO™, Super-LED® Series Lightbars		
	Mini Liberty™ II IT9 Series Lightbars, 19.31" Long, Includes Four Linear Super-LED® Corner Modules		
	IT9****P	Permanent Mount with 15' Cable, Amber, Blue, Red or White	1219.00
	IT9****M	Magnetic Mount with Cigar Cord, Amber, Blue, Red or White	1219.00
	IT9****V	Magnetic/Suction Mount with Cigar Cord, Amber, Blue, Red or White	1321.00
	IWDS*	One Single Color Short 3 Super-LED® Lighthead, Amber, Blue, Red or White	120.00
	ITTS	Two Short Super-LED® Take-Down Lights, For Permanent Mount Only	148.00
	ITA	Two Super-LED® Alley Lights, For Permanent Mount Only	148.00
	ITTSA	Two Short Super-LED® Take-Down and Alley Lights, For Permanent Mount Only	285.00

	Responder® LP Series Mini Lightbars Low Profile, Super-LED®. For Multiple Color Lightbars with Clear Outer Dome, Replace " * " with an "S" and use Lighting Package R1§§§00 for R1 Models and R2§§§00 for R2 Models. Replace Symbol "§" with the Number of Color LED Lightheads Required (Maximum of Six). Order of Color is Red, Blue and Amber.		
	Responder® LP Series Lightbars, Polycarbonate Base, with Color Outer Dome Standard on Single Color Models.		
	R1LPP*	Six CON3™ Super-LED® Modules, Permanent Mount, Amber, Blue or Red	491.00
	R1LPPF	Six CON3™ Super-LED® Modules, Permanent Mount, Driver Side Amber & Passenger Side White with Clear Dome	491.00
	R1LPM*	Six CON3™ Super-LED® Modules, Magnetic Mount, Amber, Blue or Red	516.00
	R1LPMF	Six CON3™ Super-LED® Modules, Magnetic Mount, Driver Side Amber & Passenger Side White with Clear Dome	516.00
	R1LPV*	Six CON3™ Super-LED® Modules, Magnetic/Suction Mount, Amber, Blue or Red	539.00
	R1LPVF	Six CON3™ Super-LED® Modules, Magnetic/Suction Mount, Driver Side Amber & Passenger Side White with Clear Dome	539.00
	R2LPP*	Six LIN6™ Super-LED® Modules, Permanent Mount, Amber, Blue or Red	636.00
	R2LPM*	Six LIN6™ Super-LED® Modules, Magnetic Mount, Amber, Blue or Red	659.00
	R2LPV*	Six LIN6™ Super-LED® Modules, Magnetic/Suction Mount, Amber, Blue or Red	682.00
	Responder® LP Series Lightbars, Aluminum Base, with Color Outer Dome Standard on Single Color Models.		
	R1LPHP*	Six CON3™ Super-LED® Modules, Permanent Mount, Amber, Blue or Red	539.00
	R1LPHM*	Six CON3™ Super-LED® Modules, Magnetic Mount, Amber, Blue or Red	563.00
	R1LPHV*	Six CON3™ Super-LED® Modules, Magnetic/Suction Mount, Amber, Blue or Red	594.00
	R2LPHP*	Six LIN6™ Super-LED® Modules, Permanent Mount, Amber, Blue or Red	710.00
	R2LPHM*	Six LIN6™ Super-LED® Modules, Magnetic Mount, Amber, Blue or Red	734.00
	R2LPHV*	Six LIN6™ Super-LED® Modules, Magnetic/Suction Mount, Amber, Blue or Red	755.00
††	R2LPPA4	Six LIN6™ Super-LED® Modules, Permanent Mount, Amber, 24 VDC	864.00
††	R2LPMA4	Six LIN6™ Super-LED® Modules, Magnetic Mount, Amber, 24 VDC	888.00
	Responder® LP DUO™ Series Lightbars, Polycarbonate Base, with Clear Outer Dome.		
††	RDLPPAB	Six DUO™ Amber/Blue Super-LED® Modules, Permanent Mount	1132.00
	Options for Multi-Color Responder® LP Series, Replace § with Number of Color LEDs Required (Maximum Six Modules). Order of colors is Red, Blue, Amber, For White Contact Factory For Pricing.		
	R1§§§00	Six CON3™ Super-LED® Modules, Insert Color, No Charge When Ordered with R1 Split Color Models	
	R2§§§00	Six LIN6™ Super-LED® Modules, Insert Color, No Charge When Ordered with R2 Split Color Models	

	Responder® HD Series Mini Lightbars Heavy-Duty Rotating and Super-LED®.		
	Responder® HD Series Lightbars		
	R10HDP*	Six Super-LED® Modules, Amber, Blue or Red, Permanent Mount	1281.00
	R10HDM*	Six Super-LED® Modules, Amber, Blue or Red, Magnetic Mount	1306.00
	R10HDV*	Six Super-LED® Modules, Amber, Blue or Red, Magnetic/Suction Cup Mount	1329.00
	RDXMM90	90 lb. Pull Magnetic Mount Kit with Cord & Plug	51.00
	INSTLRDX	Installation of RDXMM90 on Permanent Mount RHD Series	14.00

	Mini Edge® Freedom® IV DYAD™ Series Lightbars		
	Mini Edge® Freedom® IV Super-LED® Series Lightbars, 21.5" Long (Unless Specified), Includes Four Corner Linear-LED® Modules. First and Second "*" for Driver Side Front and Passenger Side Rear and Third and Fourth "*" for Driver Side Rear and Passenger Side Front. Clear Outer Domes with Clear Dividers. Multiple Flash Patterns with Passenger Side Cable Exit, Specify LED Color Placement at Time of Order.		
	F4M****P	Permanent Mount, Amber, Blue, Red and/or White	1485.00
	F4M****M	Magnetic Mount, Amber, Blue, Red and/or White	1485.00
	F4B****P	**NEW** 23.29" Long, with Center Section, Permanent Mount, Amber, Blue, Red and/or White	1689.00
	F4M*0*0F	Two Front Corner Facing Linear-LED®s, Permanent Mount, Amber, Blue, Red and/or White	1012.00
	F4G*0*0F	23.29" Long, Two Front Corner Facing Linear-LED®s, Pre-wired for GTT Center Mounted Emitter, Purchased Separately, Permanent Mount, Red or White	1216.00

Options for Mini Edge® Freedom® IV Super-LED® Series Lightbars, Up to Two Front and Two Rear Inboard Modules. Take Down and Alleys for Permanent Mount Only

	F4DL*	One Single Color Long 12 Super-LED® Lighthead, Amber, Blue, Red or White	237.00
	F4MA3	Two 3-LED Super-LED® Alley Lights, Includes Harnesses	169.00
	F4MA6	Two 6-LED Super-LED® Alley Lights, Includes Harnesses	223.00
	F4MTL6	Two 6-LED Super-LED® Long Take Down Lights, Includes Harnesses	223.00
	F4MTATL3	Two 3-LED Super-LED® Alley Lights and Two 6-LED Super-LED® Long Take Down Lights, Includes Harnesses	323.00
	F4MTATL6	Two 6-LED Super-LED® Alley Lights and Two 6-LED Super-LED® Long Take Down Lights, Includes Harnesses	375.00
	F4MEND*	Color End Dome, For 21.5" Lightbar, When Purchased with a Lightbar, Add Each	29.00
	F4MEND#	Color End Dome, For 21.5" Lightbar, with Clear Alley Window, When Purchased with a Lightbar, Add Each	29.00
	F4MENDX	Smoked Dome for Mini Freedom® IV, When Purchased with a Lightbar, Add Each	10.50
	F4DIVIDX	Smoked Divider, Add Each	10.50

Mini Freedom® IV Rota-Beam™ Series Lightbars

Mini Freedom® IV Rota-Beam™ Super-LED® Series Lightbars, 23.29" Long, First and Second "*" for Driver Side Front and Passenger Side Rear and Third and Forth "*" for Driver Side Rear and Passenger Side Front. Clear Outer Domes with Clear Dividers. Multiple Flash Patterns with Passenger Side Cable Exit

	R4B****P	Amber, Blue or Red	2965.00
	R4B*0*0P	Front Facing, Amber, Blue or Red	2132.00

Mini Freedom® IV Rota-Beam™ Series Lightbars, Options

	F4RB*	One Super-LED® Rota-Beam™ Module, Amber, Blue, Red or White, for Inboard Front or Rear	416.00
	F4RDL*	One Single Color Long 12 Super-LED® DYAD™ Lighthead, Amber, Blue, Red or White	237.00
	R4BFLASH	Flasher for Front or Rear F4D*s, Purchased Separately. Up to Two per Bar. Each Front or Rear Flasher Controls up to Two Lights, for a Total of Four	104.00
	R4BA3	Two 3-LED Super-LED® Alley Lights, Includes Harnesses	169.00
	R4BA6	Two 6-LED Super-LED® Alley Lights, Includes Harnesses	223.00
	F4RWA*	One Single Color Short 6 Super-LED® DYAD™ Lighthead, Warning for Alley Light Position, Amber, Blue, Red or White	167.00
	R4BTL6	Two 6-LED Super-LED® Long Take Down Lights, Includes Harnesses	223.00
	R4BEND*	Color End Dome for 23.29" Lightbar with Center Section Only, When Purchased with a Lightbar, Add Each	29.00
	R4BEND#	Color End Dome with Clear Alley Window, for 23.29" Lightbar with Center Section Only, When Purchased with a Lightbar, Add Each	29.00
	R4BENDX	Smoked Dome for 23.29" Lightbar with Center Section Only, When Purchased with Lightbar, Add Each	10.50
	F4DIVIDX	Smoked Divider, Add Each	10.50

Mini Justice® Series

Mini Justice® JY Series, Includes Four Linear6™ Corner Modules. Permanent Mount Models with 15' Cable.

	MJY****P	Permanent Mount, Red, Blue and/or Amber	881.00
	MJY****M	Magnetic Mount, Red, Blue and/or Amber	755.00
	MJY****V	Magnetic/Suction Mount, Red, Blue and/or Amber	800.00

Options for Mini Justice® Series, Take-Down and Alley Lights for Permanent Mount Models Only.

	JDC*	One CON3™, Amber, Blue, Red or White	104.00
	JDH*	One LTR3™, Red, Blue and/or Amber. Only for use with Take-Down Lights	104.00
	MJTDALL1	Four LR11 Super-LED®'s, Two Steady-Burn Take-Down and Two Steady-Burn Alley Lights with 15° Horizontal Adjustment. For Permanent Models Only	285.00

Inner Edge® XLP, Extra Low Profile Series Lightbars

Interior Lightbar, Include Super-LED® Lightheads and Mounting Hardware.

Inner Edge® XLP, Extra Low Profile Series Lightbars, 3-LED Upper Front Series, Low Current Switching, Includes Removable Lens for a Spot Pattern, Low Power, Scan-Lock™ Flash Patterns and Mounting Kit. Replace # with Number of Color LEDs Required. Order of colors is Red, Blue, Amber or White.

	IX37UF5P	Chevy Caprice, 2011-2017, Five 3-LED Lamps, Upper Front Passenger Side Unit Only, with One LED Flashing/Take-Down	599.00
	IX37UF6P	Chevy Caprice 2011-2017, Six 3-LED Lamps, Upper Front Passenger Side Unit Only (No Take-Down)	599.00
	IX37UFZ	Chevy Caprice, 2011-2017, Ten 3-LED Lamps, Upper Front Two Piece Unit, Individual Driver and Passenger Side Units, with Two LED Flashing/Take-Downs	1036.00
	IX37UFX	Chevy Caprice, 2011-2017, Twelve 3-LED Lamps, Upper Front Two Piece Unit, Individual Driver and Passenger Side Units (No Take-Downs)	1036.00
	IX46UF5P	Chevy Impala PPV (Old Body Style), 2014-2016, Five 3-LED Lamps, Upper Front Passenger Side Unit Only, with One LED Flashing/Take-Down	599.00
	IX46UF6P	Chevy Impala PPV (Old Body Style), 2014-2016, Six 3-LED Lamps, Upper Front Passenger Side Unit Only (No Take-Down)	599.00

All models are 12 Volt D.C. only unless otherwise noted above. For other voltages contact factory.
***** Replace symbol in model number with letter indicating lens color or LED color desired: **A** = Amber; **B** = Blue; **C** = Clear/White; **R** = Red; **G** = Green
# Replace symbol in model number with letter indicating SPLIT lens or LED color desired: **D** = Red/Clear or White; **E** = Blue/Clear or White; **F** = Amber/Clear or White; **H** = Green/Clear or White, **J** = Red/Blue; **K** = Red/Amber; **L** = Red/Green; **M** = Blue/Amber **†** (to be discontinued, check availability) (special order, check availability, non-returnable, non-cancelable)
! Indicate length desired: 5 foot, 6 foot, 7 foot or 8 foot **$** Indicates Lower Price

↓ †† - Special Order, Non-Returnable, Non-Cancelable. See "Made-To-Order" Statement on Table of Contents Page of this Price List.

	MODEL	DESCRIPTION	LIST
	IX46UFZ	Chevy Impala PPV (Old Body Style), 2014-2016, Ten 3-LED Lamps, Upper Front Two Piece Unit, Individual Driver and Passenger Side Units, with Two LED Flashing/Take-Downs	1036.00
	IX46UFX	Chevy Impala PPV (Old Body Style), 2014-2016, Twelve 3-LED Lamps, Upper Front Two Piece Unit, Individual Driver and Passenger Side Units (No Take-Downs)	1036.00
	IX45UF5P	Chevy Tahoe/Suburban, 2015-2017, Chevy Silverado-1500/2500/3500, 2014-2017 Five 3-LED Lamps, Upper Front Passenger Side Unit Only, with One LED Flashing/Take-Down	599.00
	IX45UF6P	Chevy Tahoe/Suburban, 2015-2017, Chevy Silverado-1500/2500/3500, 2014-2017 Six 3-LED Lamps, Upper Front Passenger Side Unit Only (No Take-Down)	599.00
	IX45UFZ	Chevy Tahoe/Suburban, 2015-2017, Chevy Silverado-1500/2500/3500, 2014-2017 Ten 3-LED Lamps, Upper Front Unit, Two Piece, Individual Driver and Passenger Side Units, with Two LED Flashing/Take-Downs	1036.00
	IX45UFX	Chevy Tahoe/Suburban, 2015-2017, Chevy Silverado-1500/2500/3500, 2014-2017 Twelve 3-LED Lamps, Upper Front Unit, Two Piece, Individual Driver and Passenger Side Units, (No Take-Downs)	1036.00
	IX35UF5P	Dodge Charger, 2011-2017, Five 3-LED Lamps, Upper Front Passenger Side Unit Only, with One LED Flashing/Take-Down	599.00
	IX35UF6P	Dodge Charger, 2011-2017, Six 3-LED Lamps, Upper Front Passenger Side Unit Only, (No Take-Down)	599.00
	IX35UFZ	Dodge Charger, 2011-2017, Ten 3-LED Lamps, Upper Front Two Piece Unit, Individual Driver and Passenger Side Units, with Two LED Flashing/Take-Downs	1036.00
	IX35UFX	Dodge Charger, 2011-2017, Twelve 3-LED Lamps, Upper Front Two Piece Unit, Individual Driver and Passenger Side Units (No Take-Downs)	1036.00
††	IX44UF5P	Dodge Durango 2013-2017, Five 3-LED Lamps, Upper Front Passenger Side Unit Only, with One LED Flashing/Take-Down	599.00
††	IX44UF6P	Dodge Durango 2013-2017, Six 3-LED Lamps, Upper Front Passenger Side Unit Only, (No Take-Down)	599.00
††	IX44UFZ	Dodge Durango 2013-2017, Ten 3-LED Lamps, Upper Front Two Piece Unit, Individual Driver and Passenger Side Units, with Two LED Flashing/Take-Downs	1036.00
††	IX44UFX	Dodge Durango 2013-2017, Twelve 3-LED Lamps, Upper Front Two Piece Unit, Individual Driver and Passenger Side Units (No Take-Downs)	1036.00
	IX42UF5P	Dodge Ram 1500, 2011-2017, Five 3-LED Lamps, Upper Front Passenger Side Unit Only, with One LED Flashing/Take-Down	599.00
	IX42UF6P	Dodge Ram 1500, 2011-2017, Six 3-LED Lamps, Upper Front Passenger Side Unit Only (No Take-Down)	599.00
	IX42UFZ	Dodge Ram 1500, 2011-2017, Ten 3-LED Lamps, Upper Front Two Piece Unit, Individual Driver and Passenger Side Units, with Two LED Flashing/Take-Downs	1036.00
	IX42UFX	Dodge Ram 1500, 2011-2017, Twelve 3-LED Lamps, Upper Front Two Piece Unit, Individual Driver and Passenger Side Units (No Take-Downs)	1036.00
	IX34UF5P	Ford Police Interceptor Utility, 2013-2017, Five 3-LED Lamps, Upper Front Passenger Side Unit Only, with One LED Flashing/Take-Down	599.00
	IX34UF6P	Ford Police Interceptor Utility, 2013-2017, Six 3-LED Lamps, Upper Front Passenger Side Unit Only (No Take-Down)	599.00
	IX34UFZ	Ford Police Interceptor Utility, 2013-2017, Ten 3-LED Lamps, Upper Front Two Piece Unit, Individual Driver and Passenger Side Units, with Two LED Flashing/Take-Downs	1036.00
	IX34UFX	Ford Police Interceptor Utility, 2013-2017, Twelve 3-LED Lamps, Upper Front Two Piece Unit, Individual Driver and Passenger Side Units (No Take-Downs)	1036.00
	IX47UF5P	Ford F-150, 2015-2017, Ford F-250/F-350, 2017, Five 3-LED Lamps, Upper Front Passenger Side Unit Only, with One LED Flashing/Take-Down	599.00
	IX47UF6P	Ford F-150, 2015-2017, Ford F-250/F-350, 2017, Six 3-LED Lamps, Upper Front Passenger Side Unit Only (No Take-Down)	599.00
	IX47UFZ	Ford F-150, 2015-2017, Ford F-250/F-350, 2017, Ten 3-LED Lamps, Upper Front Two Piece Unit, Individual Driver and Passenger Side Units, with Two LED Flashing/Take-Downs	1036.00
	IX47UFX	Ford F-150, 2015-2017, Ford F-250/F-350, 2017, Twelve 3-LED Lamps, Upper Front Two Piece Unit, Individual Driver and Passenger Side Units (No Take-Downs)	1036.00
	IX43UF5P	Ford Fusion, 2013-2016, Five 3-LED Lamps, Upper Front Passenger Side Unit Only, with One LED Flashing/Take-Down	599.00
	IX43UF6P	Ford Fusion, 2013-2016, Six 3-LED Lamps, Upper Front Passenger Side Unit Only (No Take-Down)	599.00
	IX43UFZ	Ford Fusion, 2013-2016, Ten 3-LED Lamps, Upper Front Two Piece Unit, Individual Driver and Passenger Side Units, with Two LED Flashing/Take-Downs	1036.00
	IX43UFX	Ford Fusion, 2013-2016, Twelve 3-LED Lamps, Upper Front Two Piece Unit, Individual Driver and Passenger Side Units (No Take-Downs)	1036.00
	IX38UF5P	Ford Police Interceptor Sedan, 2013-2017, Five 3-LED Lamps, Upper Front Passenger Side Unit Only, with One LED Flashing/Take-Down	599.00
	IX38UF6P	Ford Police Interceptor Sedan, 2013-2017, Six 3-LED Lamps, Upper Front Passenger Side Unit (No Take-Down)	599.00
	IX38UFZ	Ford Police Interceptor Sedan, 2013-2017, Ten 3-LED Lamps, Upper Front Unit, Two Piece, Individual Driver and Passenger Side Units, with Two LED Flashing/Take-Downs	1036.00

	IX38UFX	Ford Police Interceptor Sedan, 2013-2017, Twelve 3-LED Lamps, Upper Front Unit, Two Piece, Individual Driver and Passenger Side Units (No Take-Downs)	1036.00
	IX39UF5P	Ford F-250/F-350, 2012-2016, Five 3-LED Lamps, Upper Front Passenger Side Unit Only, with One LED Flashing/Take-Down	599.00
	IX39UF6P	Ford F-250/F-350, 2012-2016, Six 3-LED Lamps, Upper Front Passenger Side Unit Only (No Take-Downs)	599.00
	IX39UFZ	Ford F-250/F-350, 2012-2016, Ten 3-LED Lamps, Upper Front Two Piece Unit, Individual Driver and Passenger Side Units, with Two LED Flashing/Take-Down	1036.00
	IX39UFX	Ford F-250/F-350, 2012-2016, Twelve 3-LED Lamps, Upper Front Two Piece Unit, Individual Driver and Passenger Side Units (No Take-Downs)	1036.00
	IX08UF5P	† Ford Expedition, 2013-2017, Five 3-LED Lamps, Upper Front Passenger Side Unit Only, with One LED Flashing/Take-Down	599.00
	IX08UF6P	† Ford Expedition, 2013-2017, Six 3-LED Lamps, Upper Front Passenger Side Unit (No Take-Down)	599.00
	IX08UFZ	† Ford Expedition, 2013-2017, Ten 3-LED Lamps, Upper Front Unit, Two Piece, Individual Driver and Passenger Side Units, with Two LED Flashing/Take-Downs	1036.00
	IX08UFX	† Ford Expedition, 2013-2017, Twelve 3-LED Lamps, Upper Front Unit, Two Piece, Individual Driver and Passenger Side Units (No Take-Downs)	1036.00
	IXD§§§§0	Extra Low Profile 3-LED Lamps. Replace § with Number of each Color of LED Lighthead, No Charge When Ordered with Extra Low-Profile Inner Edge®, Driver Side	
	IXP§§§§0	Extra Low Profile 3-LED Lamps. Replace § with Number of each Color of LED Lighthead, No Charge When Ordered with Extra Low-Profile Inner Edge®, Passenger Side	

Inner Edge® XLP WeCan® DUO+™, Extra Low Profile Series Lightbars, 6-LED Upper Front Series, Low Current Switching, Low Power, Scan-Lock™ Flash Patterns and Mounting Kit. Replace § with Number of DUO+™ Color LEDs Required, White is the Default Second Color. Order of colors is Red/White, Blue/White or Amber/White.

	IW37UF6P	Chevy Caprice 2011-2017, Six 6-LED DUO™ Lamps, Upper Front Passenger Side Unit Only	988.00
	IW37UFX	Chevy Caprice, 2011-2017, Twelve 6-LED DUO™ Lamps, Upper Front Two Piece Unit, Individual Driver and Passenger Side Units	1768.00
	IW46UF6P	Chevy Impala PPV (Old Body Style), 2014-2016, Six 6-LED Lamps, Upper Front Passenger Side Unit Only	988.00
	IW46UFX	Chevy Impala PPV (Old Body Style), 2014-2016, Twelve 6-LED Lamps, Upper Front Two Piece Unit, Individual Driver and Passenger Side Units	1768.00
	IW45UF6P	Chevy Tahoe/Suburban, 2015-2017, Chevy Silverado-1500/2500/3500, 2014-2017, Six 6-LED DUO™ Lamps, Upper Front Passenger Side Unit Only	988.00
	IW45UFX	Chevy Tahoe/Suburban, 2015-2017, Chevy Silverado-1500/2500/3500, 2014-2017, Twelve 6-LED DUO™ Lamps, Upper Front Unit, Two Piece, Individual Driver and Passenger Side Units	1768.00
	IW35UF6P	Dodge Charger, 2011-2017, Six 6-LED DUO™ Lamps, Upper Front Passenger Side Unit Only	988.00
	IW35UFX	Dodge Charger, 2011-2016, Twelve 6-LED DUO™ Lamps, Upper Front Two Piece Unit, Individual Driver and Passenger Side Units	1768.00
	IW44UF6P	Dodge Durango 2013-2017, Six 6-LED DUO™ Lamps, Upper Front Passenger Side Unit Only	988.00
	IW44UFX	Dodge Durango 2013-2017, Twelve 6-LED DUO™ Lamps, Upper Front Two Piece Unit, Individual Driver and Passenger Side Units	1768.00
	IW42UF6P	Dodge Ram, 2011-2017, Six 6-LED DUO™ Lamps, Upper Front Passenger Side Unit Only	988.00
	IW42UFX	Dodge Ram, 2011-2017, Twelve 6-LED DUO™ Lamps, Upper Front Two Piece Unit, Individual Driver and Passenger Side Units	1768.00
	IW34UF6P	Ford Police Interceptor Utility, 2013-2017, Six 6-LED DUO™ Lamps, Upper Front Passenger Side Unit Only	988.00
	IW34UFX	Ford Police Interceptor Utility, 2013-2017, Twelve 6-LED DUO™ Lamps, Upper Front Two Piece Unit, Individual Driver and Passenger Side Units	1768.00
	IW47UF6P	Ford F-150, 2015-2017, Ford F-250/F-350, 2017, Six 6-LED DUO™ Lamps, Upper Front Passenger Side Unit Only	988.00
	IW47UFX	Ford F-150, 2015-2017, Ford F-250/F-350, 2017, Twelve 6-LED DUO™ Lamps, Upper Front Two Piece Unit, Individual Driver and Passenger Side Units	1768.00
††	IW43UF6P	Ford Fusion, 2013-2016, Six 6-LED DUO™ Lamps, Upper Front Passenger Side Unit Only	988.00
††	IW43UFX	Ford Fusion, 2013-2016, Twelve 6-LED DUO™ Lamps, Upper Front Two Piece Unit, Individual Driver and Passenger Side Units	1768.00
	IW38UF6P	Ford Police Interceptor Sedan, 2013-2017, Six 6-LED DUO™ Lamps, Upper Front Passenger Side Unit Only	988.00
	IW38UFX	Ford Police Interceptor Sedan, 2013-2017, Twelve 6-LED DUO™ Lamps, Upper Front Unit, Two Piece, Individual Driver and Passenger Side Units	1768.00
	IW39UF6P	Ford F-250/F-350, 2012-2016, Six 6-LED DUO™ Lamps, Upper Front Passenger Side Unit Only	988.00
	IW39UFX	Ford F-250/F-350, 2012-2016, Twelve 6-LED DUO™ Lamps, Upper Front Two Piece Unit, Individual Driver and Passenger Side Units	1768.00
	IW08UF6P	† Ford Expedition, 2013-2017, Six 6-LED DUO™ Lamps, Upper Front Passenger Side Unit Only	988.00
	IW08UFX	† Ford Expedition, 2013-2017, Twelve 6-LED DUO™ Lamps, Upper Front Unit, Two Piece, Individual Driver and Passenger Side Units	1768.00
	IWD§§§00	Extra Low Profile 6-LED DUO™ Lamps, Replace § with Number of Each DUO™ Color lighthead, No Charge When Ordered with Extra Low Profile DUO™ Inner Edge, Order of Colors is Red/White, Blue/White and Amber/White, Driver Side	

All models are 12 Volt D.C. only unless otherwise noted above. For other voltages contact factory.
***** Replace symbol in model number with letter indicating lens color or LED color desired: **A** = Amber; **B** = Blue; **C** = Clear/White; **R** = Red; **G** = Green
# Replace symbol in model number with letter indicating SPLIT lens or LED color desired: **D** = Red/Clear or White; **E** = Blue/Clear or White; **F** = Amber/Clear or White; **H** = Green/Clear or White, **J** = Red/Blue; **K** = Red/Amber; **L** = Red/Green; **M** = Blue/Amber **†** (to be discontinued, check availability) †† (special order, check availability, non-returnable, non-cancelable)
! Indicate length desired: 5 foot, 6 foot, 7 foot or 8 foot **$** Indicates Lower Price

↓ - Special Order, Non-Returnable, Non-Cancelable. See "Made-To-Order" Statement on Table of Contents Page of this Price List.

MODEL	DESCRIPTION	LIST
IWP§§§§0	Extra Low Profile 6-LED DUO™ Lamps, Replace § with Number of Each DUO™ Color lighthead, No Charge When Ordered with Extra Low Profile DUO™ Inner Edge, Order of Colors is Red/White, Blue/White and Amber/White, Passenger Side	

Inner Edge® XLP Low Current, DUO+™, Interior Lightbar, Include Super-LED® Lightheads and Mounting Hardware. Inner Edge® XLP DUO+™, Extra Low Profile Series Lightbars, 6-LED Upper Front Series, Low Current Switching, Low Power, Scan-Lock™ Flash Patterns and Mounting Kit. Replace §§ with Number of DUO+™ Color LEDs Required, White is the Default Second Color. Order of colors is Red/White, Blue/White or Amber/White

ID37UF6P	Chevy Caprice 2011-2017, Six 6-LED DUO™ Lamps, Upper Front Passenger Side Unit Only	884.00
ID37UFX	Chevy Caprice, 2011-2017, Twelve 6-LED DUO™ Lamps, Upper Front Two Piece Unit, Individual Driver and Passenger Side Units	1664.00
ID46UF6P	Chevy Impala PPV (Old Body Style), 2014-2016 Six 6-LED DUO™ Lamps, Upper Front Passenger Side Unit Only	884.00
ID46UFX	Chevy Impala PPV (Old Body Style), 2014-2016, Twelve 6-LED Lamps, Upper Front Two Piece Unit, Individual Driver and Passenger Side Units	1664.00
ID45UF6P	Chevy Tahoe/Suburban, 2015-2017, Chevy Silverado-1500/2500/3500, 2014-2017, Six 6-LED DUO™ Lamps, Upper Front Passenger Side Unit Only	884.00
ID45UFX	Chevy Tahoe/Suburban, 2015-2017, Chevy Silverado-1500/2500/3500, 2014-2017, Twelve 6-LED DUO™ Lamps, Upper Front Unit, Two Piece, Individual Driver and Passenger Side Units	1664.00
ID35UF6P	Dodge Charger, 2011-2017, Six 6-LED DUO™ Lamps, Upper Front Passenger Side Unit Only	884.00
ID35UFX	Dodge Charger, 2011-2017, Twelve 6-LED DUO™ Lamps, Upper Front Two Piece Unit, Individual Driver and Passenger Side Units	1664.00
ID44UF6P	Dodge Durango, 2011-2017, Six 6-LED DUO™ Lamps, Upper Front Passenger Side Unit Only	884.00
ID44UFX	Dodge Durango, 2011-2017, Twelve 6-LED DUO™ Lamps, Upper Front Two Piece Unit, Individual Driver and Passenger Side Units	1664.00
ID42UF6P	Dodge Ram 1500, 2011-2017, Six 6-LED DUO™ Lamps, Upper Front Passenger Side Unit Only	884.00
ID42UFX	Dodge Ram 1500, 2011-2017, Twelve 6-LED DUO™ Lamps, Upper Front Two Piece Unit, Individual Driver and Passenger Side Units	1664.00
ID34UF6P	Ford Police Interceptor Utility, 2013-2017, Six 6-LED DUO™ Lamps, Upper Front Passenger Side Unit Only	884.00
ID34UFX	Ford Police Interceptor Utility, 2013-2017, Twelve 6-LED DUO™ Lamps, Upper Front Two Piece Unit, Individual Driver and Passenger Side Units	1664.00
ID47UF6P	Ford F-150, 2015-2017, Ford F-250/F-350, 2017, Six 6-LED DUO™ Lamps, Upper Front Passenger Side Unit Only	884.00
ID47UFX	Ford F-150, 2015-2017, Ford F-250/F-350, 2017, Twelve 6-LED DUO™ Lamps, Upper Front Two Piece Unit, Individual Driver and Passenger Side Units	1664.00
ID43UF6P	Ford Fusion, 2013-2016, Six 6-LED DUO™ Lamps, Upper Front Passenger Side Unit Only	884.00
ID43UFX	Ford Fusion, 2013-2016, Twelve 6-LED DUO™ Lamps, Upper Front Two Piece Unit, Individual Driver and Passenger Side Units	1664.00
ID38UF6P	Ford Police Interceptor Sedan, 2013-2017, Six 6-LED DUO™ Lamps, Upper Front Unit	884.00
ID38UFX	Ford Police Interceptor Sedan, 2013-2017, Twelve 6-LED DUO™ Lamps, Upper Front Unit, Two Piece, Individual Driver and Passenger Side Units	1664.00
ID39UF6P	Ford F-250/F-350, 2012-2016, Six 6-LED DUO™ Lamps, Upper Front Passenger Side Unit Only	884.00
ID39UFX	Ford F-250/F-350, 2012-2016, Twelve 6-LED DUO™ Lamps, , Twelve 6-LED DUO™ Lamps, Upper Front Two Piece Unit, Individual Driver and Passenger Side Units	1664.00
ID08UF6P	† Ford Expedition, 2013-2017, Six 6-LED DUO™ Lamps, Upper Front Passenger Side Unit Only	884.00
ID08UFX	† Ford Expedition, 2013-2017, Twelve 6-LED DUO™ Lamps, Upper Front Unit, Two Piece, Individual Driver and Passenger Side Units	1664.00
IWD§§§00	Extra Low Profile 6-LED DUO™ Lamps, Replace § with Number of Each DUO™ Color lighthead, No Charge When Ordered with Extra Low Profile DUO™ Inner Edge®, Order of Colors are Red/White, Blue/White and Amber/White, Driver Side	
IWP§§§00	Extra Low Profile 6-LED DUO™ Lamps, Replace § with Number of Each DUO™ Color lighthead, No Charge When Ordered with Extra Low Profile DUO™ Inner Edge®, Order of Colors are Red/White, Blue/White and Amber/White, Passenger Side	

Inner Edge® RTX Series Rear Facing Super-LED® Lightbars, Six, Eight or Ten Lamp Arrays in SOLO™, DUO+™ or TRIO™ Technology.

ISTRAY6	6 Lamp Tray, Low Current, Choose 6 SOLO™ Lightheads and Vehicle Specific Housing and Mount	1019.00
ISTRAY8	8 Lamp Tray, Low Current, Choose 8 SOLO™ Lightheads and Vehicle Specific Housing and Mount	1121.00
ISTRAY10	10 Lamp Tray, Low Current, Choose 10 SOLO™ Lightheads and Vehicle Specific Housing and Mount, For Use in Sedans Only	1325.00
IWSTRAY6	6 Lamp Tray, WeCan®, Choose 6 SOLO™ Lightheads and Vehicle Specific Housing and Mount	1119.00
IWSTRAY8	8 Lamp Tray, WeCan®, Choose 8 SOLO™ Lightheads and Vehicle Specific Housing and Mount	1221.00
ISTRAYT	**NEW** 8 Lamp Tray, 6 Lamp Traffic Advisor™ (2 Wire Control) with 2 End Flashers, Low Current, Choose 8 SOLO™ Lightheads and Vehicle Specific Housing and Mount	1121.00
IWSTRAY1	10 Lamp Tray, WeCan®, Choose 10 SOLO™ Lightheads and Vehicle Specific Housing and Mount, For Use in Sedans Only	1425.00
IES*	One SOLO™ Lighthead, No Charge When Ordered with ISTRAY or IWSTRAY, Red, Blue, Amber or White	

	IDTRAY6	6 Lamp Tray, Low Current, Choose 6 DUO+™ Lightheads and Vehicle Specific Housing and Mount	1274.00
	IDTRAY8	8 Lamp Tray, Low Current, Choose 8 DUO+™ Lightheads and Vehicle Specific Housing and Mount	1478.00
	IDTRAY10	10 Lamp Tray, Low Current, Choose 10 DUO+™ Lightheads and Vehicle Specific Housing and Mount, For Use in Sedans Only	1733.00
	IWDTRAY6	6 Lamp Tray, WeCan®, Choose 6 DUO+™ Lightheads and Vehicle Specific Housing and Mount	1374.00
	IWDTRAY8	8 Lamp Tray, WeCan®, Choose 8 DUO+™ Lightheads and Vehicle Specific Housing and Mount	1578.00
	IWSTRAYT	**NEW** 8 Lamp Tray, 6 Lamp Traffic Advisor™ (2 Wire Control) with 2 End Flashers, WeCan®, Choose 8 SOLO™ Lightheads and Vehicle Specific Housing and Mount	1221.00
	IWDTRAY1	10 Lamp Tray, WeCan®, Choose 10 DUO+™ Lightheads and Vehicle Specific Housing and Mount, For Use in Sedans Only	1833.00
	IED#	One DUO+™ Lighthead, No Charge When Ordered with IDTRAY or IWDTRAY, Red, Blue, Amber and/or White	
	ITTRAY6	6 Lamp Tray, Low Current, Choose 6 TRIO™ Lightheads and Vehicle Specific Housing and Mount	1478.00
	ITTRAY8	8 Lamp Tray, Low Current, Choose 8 TRIO™ Lightheads and Vehicle Specific Housing and Mount	1784.00
	ITTRAY10	10 Lamp Tray, Low Current, Choose 10 TRIO™ Lightheads and Vehicle Specific Shroud and Mount, For Use in Sedans Only	2141.00
	IETRBA	One TRIO™ Lighthead, Red/Blue/Amber, No Charge When Ordered with ITTRAY	
	IETRCA	One TRIO™ Lighthead, Red/White/Amber, No Charge When Ordered with ITTRAY	
	IETBCA	One TRIO™ Lighthead, Blue/White/Amber, No Charge When Ordered with ITTRAY	
	IETRBC	One TRIO™ Lighthead, Red/Blue/White, No Charge When Ordered with ITTRAY	
	IE37LR8	Chevy Caprice 2011-2017, Lower Rear Housing for Six or Eight Modules, No Charge When Ordered with Inner Edge® Tray	
	IE37LRZ	Chevy Caprice 2011-2017, Lower Rear Housing for Ten Modules, No Charge When Ordered with Inner Edge® Tray	
	IE46LR8	Chevy Impala 2014-2016, Lower Rear Housing for Six or Eight Modules, No Charge When Ordered with Inner Edge® Tray	
	IE46LRZ	Chevy Impala 2014-2016, Lower Rear Housing for Ten Modules, No Charge When Ordered with Inner Edge® Tray	
	IE45UR8	Chevy Tahoe/Suburban, 2015-2017, Upper Rear Housing for Six or Eight Modules, No Charge When Ordered with Inner Edge® Tray	
	IE35LR8	Dodge Charger 2011-2017, Lower Rear Housing for Six or Eight Modules, No Charge When Ordered with Inner Edge® Tray	
	IE35LRZ	Dodge Charger 2011-2017, Lower Rear Housing for Ten Modules, No Charge When Ordered with Inner Edge® Tray	
	IE34UR8	Ford Police Interceptor Utility 2013-2017, Upper Rear Housing for Six or Eight Modules, No Charge When Ordered with Inner Edge® Tray	
	IE38LR8	Ford Police Interceptor Sedan 2013-2017, Lower Rear Housing for Six or Eight Modules, No Charge When Ordered with Inner Edge® Tray	
	IE38LRZ	Ford Police Interceptor Sedan 2013-2017, Lower Rear Housing for Ten Modules, No Charge When Ordered with Inner Edge® Tray	

Outer Edge®

Outer Edge® Rear Facing Upper Exterior Mount Super-LED®, For options please consult current price list for option descriptions and model numbers

	OE45UR6	Six Lamp Warning, Two Piece, For Chevy Tahoe 2015-2017, Requires Six OEMCRN* Lightheads	1019.00
	OE34UR6	Six Lamp Warning, Two Piece, For Ford Police Interceptor Utility 2013-2017, Requires Six OEMCRN* Lightheads	1019.00
	OEMCRN*	Outer Edge® Lighthead ONLY for OE45UR6 and OE34UR6 Series, Six Required, No Charge when Ordered with Outer Edge®	
	OE45UR6T	Six Lamp Traffic Advisor™, Two Piece, For Chevy Tahoe 2015-2017, Requires Six OEMCTA* Lightheads	1087.00
	OE34UR6T	Six Lamp Traffic Advisor™, Two Piece, For Ford Police Interceptor Utility 2013-2017, Requires Six OEMCTA* Lightheads	1087.00
	OEMCTA*	Outer Edge® Lighthead ONLY for OE45 and OE34 Series, Six Required, No Charge when Ordered with Outer Edge®	
	OEMCRN*X	Outer Edge® Lighthead ONLY, with Smoked Lens, for OE45 and OE34 Series, Six Required, When Ordered with Outer Edge®, Add Each	10.50
	OEMCTA*X	Outer Edge® Lighthead ONLY, with Smoked Lens, for OE45UR6T and OE34UR6T, Six Required, When Ordered with Outer Edge®, Add Each	10.50

Outer Edge® Rear Pillar, Exterior Mount Super-LED® Lightbar Series

	RP45	Six Lamp, Two Piece, For Chevy Tahoe 2015-2017, Requires Six OEMCRN* Lightheads	1060.00
	RP34	Six Lamp, Two Piece, For Ford Police Interceptor Utility 2013-2017, Requires Six OEMCRN* Lightheads	1060.00
	OEMCRN*	Outer Edge® lighthead, for RP45 & RP34 Only, Six Required, No Charge when Ordered with Outer Edge®	

All models are 12 Volt D.C. only unless otherwise noted above. For other voltages contact factory.
***** Replace symbol in model number with letter indicating lens color or LED color desired: **A** = Amber; **B** = Blue; **C** = Clear/White; **R** = Red; **G** = Green
# Replace symbol in model number with letter indicating SPLIT lens or LED color desired: **D** = Red/Clear or White; **E** = Blue/Clear or White; **F** = Amber/Clear or White; **H** = Green/Clear or White, **J** = Red/Blue; **K** = Red/Amber; **L** = Red/Green; **M** = Blue/Amber **†** (to be discontinued, check availability) (special order, check availability, non-returnable, non-cancelable)
! Indicate length desired: 5 foot, 6 foot, 7 foot or 8 foot **$** Indicates Lower Price

↓ - Special Order, Non-Returnable, Non-Cancelable. See "Made-To-Order" Statement on Table of Contents Page of this Price List.

MODEL	DESCRIPTION	LIST
OEMCRN*X	Outer Edge® Lighthead ONLY, with Smoked Lens, for RP45 and RP34 Series, Six Required, When Ordered with Outer Edge®, Add Each	10.50

Freedom® IV DYAD™ Series Lightbars
Clear Outer Domes with Clear Dividers. Multiple Flash Patterns with Passenger Side Cable Exit (For Mounting Options. (For Mounting Options, See Optional Mounting Kits).

Edge® Freedom® IV F4W WeCan® Series Super-LED® Lightbars, Includes Four Corner Linear-LED® Modules with Independent Control of Each Level of Each Lighthead		
F4W4****	44.5", 4 Amber, Blue, Red and/or White, Single or Two Color Over/Under Modules	1952.00
F4W8****	49.25", 4 Amber, Blue, Red and/or White, Single or Two Color Over/Under Modules	1952.00
F4W2****	55", 4 Amber, Blue, Red and/or White, Single or Two Color Over/Under Modules	1952.00
F4W0****	60", 4 Amber, Blue, Red and/or White, Single or Two Color Over/Under Modules, Freight Surcharges May Apply	2430.00
F4W7****	72", 4 Amber, Blue, Red and/or White, Single or Two Color Over/Under Modules, Freight Surcharges May Apply	2430.00
Edge® Freedom® IV F4X Low Current Series Super-LED® Lightbars, Includes Four Corner Linear-LED® Modules		
F4X4****	44.5", 4 Amber, Blue, Red and/or White, Single Color Modules	1844.00
F4X8****	49.25", 4 Amber, Blue, Red and/or White, Single Color Modules	1844.00
F4X2****	55", 4 Amber, Blue, Red or White, Single Color Modules	1844.00
F4X0****	60", 4 Amber, Blue, Red and/or White, Single Color Modules, Freight Surcharges May Apply	2322.00
F4X7****	72", 4 Amber, Blue, Red and/or White, Single Color Modules, Freight Surcharges May Apply	2322.00
Edge® Freedom® IV Series Options		
F4DL*	One Single Color Long 12 Super-LED® DYAD™ Lighthead, Amber, Blue, Red or White	237.00
F4DS*	One Single Color Short 6 Super-LED® DYAD™ Lighthead, Amber, Blue, Red or White	167.00
F4DL#	One Two Color Long 12 Super-LED® DYAD™ Lighthead, Amber, Blue, Red and/or White, for F4W Series Only	237.00
F4DS#	One Two Color Short 6 Super-LED® DYAD™ Lighthead, Amber, Blue, Red and/or White, for F4W Series Only	167.00
F4A3	Two 3-LED Super-LED® Alley Lights	156.00
F4A6	Two 6-LED Super-LED® Alley Lights	223.00
F4WA*	One Single Color Short 6 Super-LED® DYAD™ Lighthead, Warning for Alley Light Position, Amber, Blue, Red or White	167.00
F4RWA#	One Single Short 6 Super-LED® Lighthead, Amber, Blue, Red with White Alley light, for F4W Series Only	167.00
F4TL6	Two 6-LED Super-LED® Long Take Down Lights	223.00
F4TS6	Two 6-LED Super-LED® Short Take Down Lights	223.00
F4WBTT	Two LED Brake/Tail/Turn Lights for 44"-60" F4W Series Only	234.00
F4XBTT	Two LED Brake/Tail/Turn Lights for F4X Series Only, Includes External Harness	271.00
F4XTACBL	Traffic Advisor™ Internal and External Cables, Lightheads Purchased Separately, When Purchased with Lightbar Only	259.00
F4XTACTL	Traffic Advisor™ Internal and External Cables and Control Head, Lightheads Purchased Separately, When Purchased with Lightbar Only	568.00
DELWCCP	Delete WeCan® Control Point, F4W Series Only	39.00
WCC92SUB	Substitute WCC92 WeCan® Controller for WeCan® Control Point, When Purchased with F4W Series Only (Not for Use with Photocell Option)	167.00
F4DSCBL	Driver Side Cable Exit	65.00
FLBULK18	Bulk Package of 18 Freedom® IV's, In Place of Individually Boxed Lightbars - Deduct	60.00
795H	GTT Self-Contained LED IR Emitter, Refer to GTT Opticom™ Emitter Section for Pricing	
F4795H	Installation (Pre-wired) of 795H in a Freedom® IV Lightbar, No Charge when Purchased with a 795H Emitter, Center Mount Option Only	
F4795HT	Two 3-LED Take Downs and Installation (Pre-wired) of 795H (Purchased Separately) in a Freedom® IV Lightbar, Center Mount Option Only	281.00
F4500S	Strobe for Center Mount, Includes External Cable, Center Mount Only	185.00
F4500ST	Two 3-LED Take Downs and Strobe, Includes External Cable for Strobe, Center Mount Option Only	325.00
PF_#F4#	Pioneer™ Lightbar Mount for Freedom® IV, Refer to Pioneer and Pioneer Plus™ Series Lightbar Mount for Models and Pricing	
F4WPHOTO	Photocell Option for Hi/Low Power, F4W Series Only, No Charge when Ordered with Lightbar (Not for Use with Smoked or Colored Lens or with WCC92/WCC92SUB)	
F4XPHOTO	Photocell Option for Hi/Low Power, F4X Series Only, No Charge when Ordered with Lightbar (Not for Use with Smoked or Colored Lens or with WCC92/WCC92SUB)	
F4CF*	Color Filter, Corner Module, Each	6.15
F4LF*	Color Filter, Long Module, Each	6.15
F4SF*	Color Filter, Short Module, Each	6.15
F42END*	Color End Dome for 44" or 55" Lightbar, When Purchased with a Lightbar, Add Each	29.00
F42END#	Color End Dome with Clear Alley Window, for 44" or 55" Lightbar, When Purchased with a Lightbar, Add Each	29.00

	F48END*	Color End Dome for 49", 60", 70", 72", 76", 81", 92" and 98" Lightbar, When Purchased with a Lightbar, Add Each	29.00
	F48END#	Color End Dome with Clear Alley Window, for 49", 60", 70", 72", 76", 81", 92" and 98" Lightbar, When Purchased with a Lightbar, Add Each	29.00
	F41CNT*	Color Center Dome for One Light Center Section, When Purchased with a Lightbar, Add Each	14.00
	F42CNT*	Color Center Dome for Two Light Center Section, When Purchased with a Lightbar, Add Each	14.00
	F42ENDX	Smoked End Dome for 44" and 55" Lightbar, When Purchased with a Lightbar, Add Each	10.50
	F48ENDX	Smoked End Dome for 49", 60", 72", 81", 92" and 98" Lightbar, When Purchased with a Lightbar, Add Each	10.50
	F41CNTX	Smoked Center Dome for One Light Center Section, When Purchased with a Lightbar, Add Each	10.50
	F42CNTX	Smoked Center Dome for Two Light Center Section, When Purchased with a Lightbar, Add Each	10.50
	F4DIVIDX	Smoked Divider, Add Each	10.50

Freedom® IV Rota-Beam™ Super-LED® Series Lightbars
Clear Outer Domes with Clear Dividers. Multiple Flash Patterns with Passenger Side Cable Exit (For Mounting Options, See Optional Mounting Kits).

Edge® Freedom® IV F4R Rota-Beam™ Series Super-LED® Lightbars, Includes Four Half Corner Super-LED® Beacons and Scan-Lock™ Flash Patterns.

	F4R2****	55", 4 Amber, Blue, Red and/or White, Single Color Modules	3121.00
	F4R0****	60", 4 Amber, Blue, Red and/or White, Single Color Modules	3423.00
	F4R7****	72", 4 Amber, Blue, Red and/or White, Single Color Modules	3423.00

Edge® Freedom® IV Rota-Beam™ Series Options

	F4RB*	One Super-LED® Rota-Beam Module, Amber, Blue, Red or White, for Inboard Front or Rear	416.00
	F4RDL*	One Single Long 12 Super-LED® Lighthead, Amber, Blue, Red or White	237.00
	F4RDS*	One Single Short 6 Super-LED® Lighthead, Amber, Blue, Red or White	167.00
	F4RA3	Two 3-LED Super-LED® Alley Lights	169.00
	F4RA6	Two 6-LED Super-LED® Alley Lights	223.00
	F4R6TL	Two 6-LED Super-LED® Long Take Down Lights	223.00
	F4R3TS	Two 3-LED Super-LED® Short Take Down Lights	169.00
	F4R6TS	Two 6-LED Super-LED® Short Take Down Lights	223.00
	F4RFLASH	Flasher for Front or Rear F4RDS* and F4RDL*, purchased separately. Up to Two per Bar. Each Front or Rear Flasher Controls up to Four Lights, for a Total of Eight	104.00
	FRDSCBL	**NEW** Driver Side Cable Exit, for Lightbars up to 60" Long	65.00
	F4RDSC72	**NEW** Driver Side Cable Exit, for Lightbars 72" or Longer	65.00

Legacy® Super-LED® Series Lightbars
WeCan® with DUO+™, Diamond Optix™ and Multiple Flash Patterns. Clear Outer Lens with Passenger Side Cable Exit. For Mounting Options, Use MKLP Models located in the Optional Mounting Kits.

Legacy® GB WeCan® DUO+™ Color Series Super-LED®, Includes Four Extra High Intensity Corner Linear-LED® Modules with Independent Control of the Two Colors of Each Lighthead.

	GB4****	44", 4 Single Color Amber, Blue, Red or White	2080.00
	GB4####	44", 4 Two Color Amber, Blue, Red and/or White	2080.00
	GB8****	48", 4 Single Color Amber, Blue, Red or White	2080.00
	GB8####	48", 4 Two Color Amber, Blue, Red and/or White	2080.00
	GB2****	54", 4 Single Color Amber, Blue, Red or White	2236.00
	GB2####	54", 4 Two Color Amber, Blue, Red and/or White	2236.00

Legacy® Series Options, Options not Available on all Models, Refer to WeCad™ Build-A-Bar Program for Lighthead Placement.

	GBDL*	One Single Color DUO+™ Amber, Blue, Red or White, Long Super-LED® Lighthead	208.00
	GBDL#	One Dual Color DUO+™ Amber, Blue, Red and/or White, Long Super-LED® Lighthead	208.00
	GBDS*	One Single Color DUO+™ Amber, Blue, Red or White, Short Super-LED® Lighthead	121.00
	GBDS#	One Dual Color DUO+™ Amber, Blue, Red and/or White, Short Super-LED® Lighthead	121.00
	GBTL	Two Long Super-LED® Take-Down Lights	233.00
	GBTS	Two Short Super-LED® Take-Down Lights	131.00
	GBA	Two Super-LED® Alley Lights	131.00
	GBAW*	One Super-LED® DUO+™ Warning/Warning or Warning/Alley Light, Single Color	121.00
	GBAW#	One Super-LED® DUO+™ Warning/Warning or Warning/Alley Light, Dual Color	121.00
	GBCF*	Color Filter, Corner Module	6.15
	GBLF*	Color Filter, Long Module	6.15
	GBSF*	Color Filter, Short Module	6.15
	WCC92SUB	Substitute WCC92 WeCan® Controller for WeCan Control Point, For Use with Legacy® Series Only (Not for Use with Photocell Option)	167.00
	DELWCCP	Delete WeCan® Control Point (DEDUCT)	39.00
	GBDSCBL	Driver Side Cable Exit	65.00
	GB8ENDX	Smoked End Dome for 48" Lightbar Only, When Purchased with a Lightbar, Add Each	10.50
	GB2ENDX	Smoked End Dome, for 44" or 54" Lightbar Only, Purchased with a Lightbar, Add Each	10.50
	GBCNTX	Smoked Center Dome for 54" Lightbar Only, When Purchased with a Lightbar, Add	10.50
	GBDIVIDX	Smoked Divider, When Purchased with a Lightbar, Add Each	10.50
	GSPHOTO	Photocell Option for Hi/Low Power, No Charge when Ordered with Lightbar (Not for Use with Smoked or Colored Lens or with WCC92/WCC92SUB)	

All models are 12 Volt D.C. only unless otherwise noted above. For other voltages contact factory.
***** Replace symbol in model number with letter indicating lens color or LED color desired: **A** = Amber; **B** = Blue; **C** = Clear/White; **R** = Red; **G** = Green
# Replace symbol in model number with letter indicating SPLIT lens or LED color desired: **D** = Red/Clear or White; **E** = Blue/Clear or White; **F** = Amber/Clear or White; **H** = Green/Clear or White, **J** = Red/Blue; **K** = Red/Amber; **L** = Red/Green; **M** = Blue/Amber **†** (to be discontinued, check availability) (special order, check availability, non-returnable, non-cancelable)
! Indicate length desired: 5 foot, 6 foot, 7 foot or 8 foot **$** Indicates Lower Price

↓ - Special Order, Non-Returnable, Non-Cancelable. See "Made-To-Order" Statement on Table of Contents Page of this Price List.

MODEL	DESCRIPTION	LIST
Legacy® TRIO™ Series Super-LED® Lightbars Includes Four Corner TRIO™ Modules, Alley Lights and Clear Lens. 44" Lightbar Features 10 Inboard Modules and Two 6-LED Take-Down Lights. 48 "and 54" Lightbars Feature 14 Inboard Modules and Two 3-LED (48") or Two 6-LED (54") Take-Down Lights. For Mounting Options. (For Mounting Options, See Optional Mounting Kits).		
Legacy® TRIO1 Series Super-LED® Lightbars, Red/Blue with White Illumination		
G341	44"	5905.00
G381	48"	6217.00
G321	54"	6527.00
Legacy® TRIO2 Series Super-LED® Lightbars, Red/Blue with White Illumination Front and Rear Corners, Red/Amber/White Driver Rear Inboard and Blue/Amber/White Passenger Inboard		
G342	44"	5905.00
G382	48"	6217.00
G322	54"	6527.00
Legacy® TRIO3 Series Super-LED® Lightbars, Red/Blue with Green Corners and White Illumination Front and Rear Inboards		
G343	44"	6120.00
G383	48"	6433.00
G323	54"	6742.00
Legacy® TRIO4 Series Super-LED® Lightbars, Red/Blue with Green Corners and White Illumination Front Inboards and Red/Amber/White Driver Rear Inboard and Blue/Amber/White Passenger Inboard		
G344	44"	6120.00
G384	48"	6433.00
G324	54"	6742.00
Legacy® TRIO5 Series Super-LED® Lightbars, Red/Blue with White Illumination to the Front and Rear Corners and Red/Blue/Amber Rear Inboards		
G345	44"	5905.00
G385	48"	6217.00
G325	54"	6527.00
Legacy® TRIO6 Series Super-LED® Lightbars, Red/Blue with Green Corners and White Illumination Front Inboards and Red/Blue/Amber Rear Inboards		
G346	44"	6120.00
G386	48"	6433.00
G326	54"	6742.00
Legacy SOLO™ Super-LED® Series Lightbars WeCan®, Diamond Optix™ and Multiple Flash Pattern. Clear outer Lens with Passenger Side Cable Exit. For Mounting options, Use MKLP Located in the Optional Mounting Kits		
Legacy SOLO™ GS WeCan® Series Lightbars		
GS4****	44" Single Color, Red, Blue, Amber or White	1872.00
GS8****	48" Single Color, Red, Blue, Amber or White	1872.00
GS2****	54" Single Color, Red, Blue, Amber or White	2028.00
Legacy SOLO™ Series Options, Options not Available on all Models, Refer to WeCad™ Bulid-A-Bar Program for Lighthead Placement		
GSDL*	One Super-LED® Single Color Long Lighthead, Red, Blue, Amber or White	121.00
GSDS*	One Super-LED® Single Color Short Lighthead, Red, Blue, Amber or White	83.00
GBTL	Two Long Super-LED® Take-Down Lights	233.00
GBTS	Two Short Super-LED® Take-Down Lights	131.00
GBA	Two Super-LED® Alley Lights	131.00
GSAW*	One Super-LED® Single Color Short Lighthead for Alley Position Only, Red, Blue, Amber or White	93.00
GSTL*	One Super-LED® DUO™ Warning/Traffic Advisor™ Long Lighthead, Warning Available in Red, Blue or White	197.00
GSTS*	One Super-LED® DUO™ Warning/Traffic Advisor™ Short Lighthead, Warning Available in Red, Blue or White	115.00
GSPHOTO	Photocell Option for Hi/Low Power, No Charge when Ordered with Lightbar (Not for Use with Smoked or Colored Lens or with WCC92/WCC92SUB)	
GBCF*	Color Filter, Corner Module	6.15
GBLF*	Color Filter, Long Module	6.15
GBSF*	Color Filter, Short Module	6.15
WCC92SUB	Substitute WCC92 WeCan® Controller for WeCan Control Point, For Use with Legacy® Series Only (Not for Use with Photocell Option)	167.00
DELWCCP	Delete WeCan® Control Point (DEDUCT)	39.00
GBDSCBL	Driver Side Cable Exit	65.00
GB8ENDX	Smoked End Dome for 48" Lightbar Only, When Purchased with a Lightbar, Add Each	10.50
GB2ENDX	Smoked End Dome, for 44" or 54" Lightbar Only, When Purchased with a Lightbar, Add Each	10.50
GBCNTX	Smoked Center Dome for 54" Lightbar Only, When Purchased with a Lightbar, Add Each	10.50
GBDIVIDX	Smoked Divider, When Purchased with a Lightbar, Add Each	10.50

Liberty™ II Super-LED® Series Lightbars
Clear Outer Lens with Clear Dividers with Multiple Flash Patterns and Passenger Side Cable Exit. For Mounting Options, Use MKLP Located in the Optional Mounting Kits

Liberty™ II, SOLO™ IX & IG Low Current Series, Four Single Color Corner Modules. For use with Single Color Inboard Lighthead Options Only.

	IX4****	44" Single Color, Red, Blue, Amber or White	1584.00
	IX8****	48" Single Color, Red, Blue, Amber or White	1584.00
	IX2****	54" Single Color, Red, Blue, Amber or White	1584.00
	IG8****	48" Single Color, Red, Blue, Amber or White, with Center Section for 795H, Strobe or Center LED Warning	1668.00
	IG2****	54" Single Color, Red, Blue, Amber or White, with Center Section for 795H, Strobe or Center LED Warning	1668.00

Liberty™ II, SOLO™ IW & IH WeCan® Series, Four Single Color Corner Modules, with Independent Control of each Lighthead. For use with Single Color Inboard Lighthead Options Only, except for a DUO+™ Rear Traffic Advisor™.

	IW4****	44" Single Color, Red, Blue, Amber or White	1691.00
	IW8****	48" Single Color, Red, Blue, Amber or White	1691.00
	IW2****	54" Single Color, Red, Blue, Amber or White	1691.00
	IH8****	48" Single Color, Red, Blue, Amber or White, with Center Section for 795H, Strobe or Center LED Warning	1774.00
	IH2****	54" Single Color, Red, Blue, Amber or White, with Center Section for 795H, Strobe or Center LED Warning	1774.00

Liberty™ II, SOLO™, IX, IG, IH and IW Series Options

	IWDL*	One Single Color Long 6 Super-LED® Lighthead, Amber, Blue, Red or White	173.00
	IWDS*	One Single Color Short 3 Super-LED® Lighthead, Amber, Blue, Red or White	120.00
	IBDL#	One DUO+™ Color Interleaved Long Super-LED® Lighthead, Amber, Blue, Red and/or White, For use as a Rear DUO+™ Traffic Advisor™ IH and IW Series Only	310.00
	IBDS#	One DUO+™ Color Interleaved Short 6 Super-LED® Lighthead, Amber, Blue, Red and/or White, For use as a Rear DUO+™ Traffic Advisor™ IH and IW Series Only	173.00
	IHDC*	One Single Color 6-LED Double Reflector Lighthead, Amber, Blue, White or Red, for IG or IH Series Lightbar Only. Rear Center Mount Section Only	173.00
	IJDC#	One DUO+™ Color Interleaved Double Reflector Lighthead, Amber, Blue, White and/or Red, for IH Series Lightbar Only. Rear Center Mount Option Only, for use as a DUO+ Traffic Advisor™	310.00
	IWTS3*	One Short 3 Super-LED® Take Down Light and One Single Color Short 3 Super-LED® Lighthead, for Inboard Position in a 48" IW and IX Series Lightbar Only	185.00
	IWTS6*	One Short 6 Super-LED® Take Down Light and One Single Color Short 3 Super-LED® Lighthead, for Inboard Position in a 48" IW and IX Series Lightbar Only	236.00
	ITL12	Two Long 12 Super-LED® Take Down Lights	408.00
	ITL6	Two Long 6 Super-LED® Take Down Lights	233.00
	ITS6	Two Short 6 Super-LED® Take Down Lights	233.00
	ITL3	Two Long 3 Super-LED® Take Down Lights	131.00
	ITS3	Two Short 3 Super-LED® Take Down Lights	131.00
	IA3	Two 3 Super-LED® Alley Lights, with 15° Horizontal Adjustment	131.00
	ICF*	Color Filter, for Corner Module Only	6.15
	ILF*	Color Filter, Long Module	6.15
	ISF*	Color Filter, Short Module	6.15
	IWTACNTL	Traffic Advisor™, Internal and External Harness and TACTL5, Lightheads purchased separately. When Purchased with Lightbar Only	568.00
	IWBTTLED	Two LED Brake/Tail/Turn Lights, For WeCan® Series Only	190.00
	IXBTTLED	Two LED Brake/Tail/Turn Lights, For IX Series Only	211.00
	795H	GTT Self-Contained LED IR Opticom™ Emitter, Refer to GTT Opticom™ Emitter Section for Pricing.	
	IJ795H	Installation (Pre-wired) of 795H in a Liberty™ II IG or IH Series Lightbar Only. Center Mount Option Only. No Charge when Purchased with 795H	
	IJ795HT	Two Super-LED® Flashing Take-Down Lights and Installation (Pre-wired) of 795H in a Liberty™ II IG or IH Series Lightbar Only. Center Mount Option Only	131.00
	IJ500S	Strobe for Liberty™ II IG or IH Series Lightbar Only. Center Mount Option Only	185.00
	IJ500ST	Two Super-LED® Flashing Take-Down Lights and a Strobe for Liberty™ II IG or IH Series Lightbar Only. Center Mount Option Only	325.00
	IWTACBL	Traffic Advisor™, Internal and External Harness, for use with CCSRNTA, Lightheads Purchased Separately. When Purchased with Lightbar Only	230.00
	IBDSCBL	Driver Side Cable Exit	65.00
	IWPHOTO	Photo Cell Option for Hi/Low Power, For IW Series Only, No Charge when Ordered with Lightbar (Not for Use with Smoked or Colored Lens or with WCC92/WCC92SUB)	
	IXPHOTO	Photo Cell Option for Hi/Low Power, For IX Series Only, No Charge when Ordered with Lightbar (Not for Use with Smoked or Colored Lens or with WCC92/WCC92SUB)	
	IJ8END#	Color End Dome with Alley Window, for 48" IG or IH Series Only, When Purchased with a Lightbar, Add Each	29.00
	IJ2END#	Color End Dome with Alley Window, for 54" IG or IH Series Only, When Purchased with a Lightbar, Add Each	29.00
	IJCNT*	Color Center Dome for 48" or 54" IG or IH Series Only, When Purchased with a Lightbar, Add Each	14.00

All models are 12 Volt D.C. only unless otherwise noted above. For other voltages contact factory.
***** Replace symbol in model number with letter indicating lens color or LED color desired: **A** = Amber; **B** = Blue; **C** = Clear/White; **R** = Red; **G** = Green
# Replace symbol in model number with letter indicating SPLIT lens or LED color desired: **D** = Red/Clear or White; **E** = Blue/Clear or White; **F** = Amber/Clear or White; **H** = Green/Clear or White, **J** = Red/Blue; **K** = Red/Amber; **L** = Red/Green; **M** = Blue/Amber **†** (to be discontinued, check availability) (special order, check availability, non-returnable, non-cancelable)
! Indicate length desired: 5 foot, 6 foot, 7 foot or 8 foot **$** Indicates Lower Price

↓ - Special Order, Non-Returnable, Non-Cancelable. See "Made-To-Order" Statement on Table of Contents Page of this Price List.

MODEL	DESCRIPTION	LIST
IJ8ENDX	Smoked End Dome for 48" IG or IH Series Only, When Purchased with a Lightbar, Add Each	10.50
IJ2ENDX	Smoked End Dome, for 54" IG or IH Series Only, When Purchased with a Lightbar, Add Each	10.50
IJCNTX	Smoked Center Dome for 48" or 54" IG or IH Series Only, When Purchased with a Lightbar, Add	10.50
IB4ENDX	Smoked End Dome, for 44" IX or IW Series Only, When Purchased with a Lightbar, Add Each	10.50
IB8ENDX	Smoked End Dome for 48" or 54" IX or IW Series Only, When Purchased with a Lightbar, Add Each	10.50
IBCNTX	Smoked Center Dome for 54" IX or IW Series Only, When Purchased with a Lightbar, Add	10.50
IBDIVIDX	Smoked Divider for IX, IG, IH or IW Series Only, When Purchased with a Lightbar, Add Each	10.50
WCC92SUB	Substitute WCC92 WeCan® Controller for WeCan Control Point, For Use with Liberty™ II WeCan® Series Only (Not for Use with Photocell Option)	167.00

Liberty™ II, DUO+™ IB & IJ WeCan® Series and Options, Four High Intensity Corner Modules, with Independent Color Control of each Lighthead.

IB4****	44" Single Color, Red, Blue, Amber or White	2162.00
IB8****	48" Single Color, Red, Blue, Amber or White	2162.00
IB2****	54" Single Color, Red, Blue, Amber or White	2162.00
IJ8****	48" Single Color, Red, Blue, Amber or White, with Center Section for 795H, Strobe or Center LED Warning	2243.00
IJ8####	48" DUO+™ Color, Red, Blue, Amber and/or White, with Center Section for 795H, Strobe or Center LED Warning	2243.00
IJ2****	54" Single Color, Red, Blue, Amber or White, with Center Section for 795H, Strobe or Center LED Warning	2243.00
IJ2####	54" DUO+™ Color, Red, Blue, Amber and/or White, with Center Section for 795H, Strobe or Center LED Warning	2243.00
IB4####	44" DUO+™ Color, Red, Blue, Amber and/or White	2162.00
IB8####	48" DUO+™ Color, Red, Blue, Amber and/or White	2162.00
IB2####	54" DUO+™ Color, Red, Blue, Amber and/or White	2162.00
IBDL*	One Single Color Long 12 Super-LED® Lighthead, Amber, Blue, Red or White	310.00
IBDL#	One DUO+™ Color Interleaved Long Super-LED® Lighthead, Amber, Blue, Red and/or White	310.00
IBDS*	One Single Color Short 6 Super-LED® Lighthead, Amber, Blue, Red or White	173.00
IBDS#	One DUO+™ Color Interleaved Short 6 Super-LED® Lighthead, Amber, Blue, Red and/or White	173.00
ITL12	Two Long 12 Super-LED® Take Down Lights	408.00
IJDC*	One Single Color Double Reflector Lighthead, Amber, Blue, White or Red, for IJ Series Lightbar Only. Rear Center Mount Option Only	310.00
IJDC#	One DUO+™ Color Interleaved 12-LED Double Reflector Lighthead, Amber, Blue, White and/or Red, for IJ Series Lightbar Only. Rear Center Mount Option Only	310.00
ITL6	Two Long 6 Super-LED® Take Down Lights	233.00
ITS6	Two Short 6 Super-LED® Take Down Lights	233.00
ITL3	Two Long 3 Super-LED® Take Down Lights	131.00
ITS3	Two Short 3 Super-LED® Take Down Lights	131.00
IBTS3*	One Short 3 Super-LED® Take Down Light and One Single Color Short 6 Super-LED® Lighthead, for Inboard Position in a 48" IB Series Lightbar Only	238.00
IBTS3#	One Short 3 Super-LED® Take Down Light and One DUO+™ Interleaved Short Super-LED® Lighthead, for Inboard Position in a 48" IB Series Lightbar Only	238.00
IBTS6*	One Short 6 Super-LED® Take Down Light and One Single Color Short 6 Super-LED™ Lighthead, for Inboard Position in a 48" IB Series Lightbar Only	289.00
IBTS6#	One Short 6 Super-LED® Take Down Light and One DUO+™ Interleaved Short 6 Super-LED® Lighthead, for Inboard Position in a 48" IB Series Lightbar Only	289.00
IA3	Two 3 Super-LED® Alley Lights with 15° Horizontal Adjustment	131.00
ICF*	Color Filter, for Single Color Corner Module Only	6.15
ILF*	Color Filter, for Single Color Long Module Only	6.15
ISF*	Color Filter, for Single Color Short Module Only	6.15
795H	GTT Self-Contained LED IR Opticom™ Emitter, Refer to GTT Opticom™ Emitter Section for Pricing.	
IJ795H	Installation (Pre-wired) of 795H in a Liberty™ II IJ Series Lightbar Only. Center Mount Option Only. No Charge when Purchased with 795H	
IJ795HT	Two Super-LED® Flashing Take-Down Lights and Installation (Pre-wired) of 795H in a Liberty™ II IJ Series Lightbar Only. Center Mount Option Only	131.00
IJ500S	Strobe for Liberty™ II IJ Series Lightbar Only. Center Mount Option Only	185.00
IJ500ST	Two Super-LED® Flashing Take-Down Lights and a Strobe for Liberty™ II IJ Series Lightbar Only. Center Mount Option Only	325.00
IWBTTLED	Two LED Brake/Tail/Turn Lights, For WeCan® Series Only	190.00
IBDSCBL	Driver Side Cable Exit	65.00
IJ8END#	Color End Dome with Alley Window, for 48" IJ Series Only, When Purchased with a Lightbar, Add Each	29.00
IJ2END#	Color End Dome with Alley Window, for 54" IJ Series Only, When Purchased with a Lightbar, Add Each	29.00
IJCNT*	Color Center Dome for 48" or 54" IJ Series Only, When Purchased with a Lightbar, Add	14.00
IJ8ENDX	Smoked End Dome for 48" IJ Series Only, When Purchased with a Lightbar, Add Each	10.50

	IJ2ENDX	Smoked End Dome, for 54" IJ Series Only, When Purchased with a Lightbar, Add Each	10.50
	IJCNTX	Smoked Center Dome for 48" or 54" IJ Series Only, When Purchased with a Lightbar, Add	10.50
	IB4ENDX	Smoked End Dome, for 44" IB Series Only, When Purchased with a Lightbar, Add Each	10.50
	IB8ENDX	Smoked End Dome for 48" or 54" IB Series Only, When Purchased with a Lightbar, Add Each	10.50
	IBCNTX	Smoked Center Dome for 54" IB Series Only, When Purchased with a Lightbar, Add	10.50
	IBDIVIDX	Smoked Divider for IB or IJ Series Only, When Purchased with a Lightbar, Add Each	10.50
	WCC92SUB	Substitute WCC92 WeCan® Controller for WeCan Control Point, For Use with Liberty™ II WeCan Series Only (Not for Use with Photocell Option)	167.00
	IWPHOTO	Photo Cell Option for Hi/Low Power, No Charge when Ordered with Lightbar (Not for Use with Smoked or Colored Lens or with WCC92/WCC92SUB)	

Liberty™ II TRIO™ Series Super-LED® Lightbars
Includes Four Corner TRIO® Modules, Alley Lights and Clear Lens. 44" and 48" Lightbar Features 10 Inboard Modules and Two 3-LED Take-Down Lights. 54" Lightbar Features 14 Inboard Modules and Two 3-LED Take-Down Lights. (For Mounting Options, See Optional Mounting Kits).

Liberty™ II TRIO1 Series Super-LED® Lightbars, Red/Blue with White Illumination

	I341	44"	5905.00
	I381	48"	6217.00
	I321	54"	6527.00

Liberty™ II TRIO2 Series Super-LED® Lightbars, Red/Blue with Traffic Advisor™ and White Illumination

	I342	44"	5905.00
	I382	48"	6217.00
	I322	54"	6527.00

Liberty™ II TRIO3 Series Super-LED® Lightbars, Red and Blue Warning with Green Command Corners and White Illumination Inboard

	I343	44"	6120.00
	I383	48"	6433.00
	I323	54"	6742.00

Liberty™ II TRIO4 Series Super-LED® Lightbars, Red and Blue Warning with Amber Traffic Advisor™ and Green Command Corners and White Illumination Front and Rear Inboard

	I344	44"	6120.00
	I384	48"	6433.00
	I324	54"	6742.00

Liberty™ II TRIO5 Series Super-LED® Lightbars, Red/Blue with White Illumination to the Front and Rear Corners and Red/Blue/Amber Rear Inboards

	I345	44"	5905.00
	I385	48"	6217.00
	I325	54"	6527.00

Liberty™ II TRIO6 Series Super-LED® Lightbars, Red/Blue with Green Corners and White Illumination Front Inboards and Red/Blue/Amber Rear Inboards

	I346	44"	6120.00
	I386	48"	6433.00
	I326	54"	6742.00

Liberty™ II, TRIO™ Series Options

	SUBI3T6S	Substitute 6-LED Short Take-Downs for 3-LED Short Take-Downs, for Liberty™ II TRIO™ Only	102.00
	SUBI3T6L	Substitute 6-LED Long Take-Downs for 3-LED Long Take-Downs, for Liberty™ II TRIO™ Only	102.00
	SUBI3T12	Substitute 12-LED Long Take-Downs for 3-LED Long Take-Downs, for Liberty™ II TRIO™ Only	278.00

Justice® Super-LED® WeCan® Series Lightbars
Black Base with Clear Outer Lenses Standard with Multiple Flash Patterns and Passenger Side Cable Exit. (For Mounting Options, See Optional Mounting Kits).

Justice® JV WeCan® Series Super-LED®, Includes Four Corner Linear-LED® Modules with 9 Super-LED®s Per Module.

	JV4****	44" 4 Amber, Blue, Red and/or White	1472.00
	JV8****	50.125" 4 Amber, Blue, Red and/or White	1541.00
	JV2****	56.25" 4 Amber, Blue, Red and/or White	1616.00

Justice® JY WeCan® Series Super-LED®, Includes Four Corner Linear-LED® Modules with 6 Super-LED®s Per Module.

	JY4****	44" 4 Amber, Blue, Red and/or White	1360.00
	JY8****	50.125" 4 Amber, Blue, Red and/or White	1428.00
	JY2****	56.25" 4 Amber, Blue, Red and/or White	1503.00

Justice® WeCan® Series Options

	JDC*	One CON3™, Amber, Blue, Red or White	104.00
	JDH*	One LTR3™, for Use in Center Section Only, Amber, Blue, Red or White	104.00
	JDL*	One LIN6™, Amber, Amber, Blue, Red or White	167.00
	JDL#	One DUO™ LIN6™, Red/Amber or Blue/Amber, For use in Rear of Bar as a DUO™ Traffic Advisor™	176.00
	JTLS1	Two LR11 Super-LED® Flashing Take-Down Lights with 15° Horizontal Adjustment	117.00
	JALF1	Two LR11 Super-LED® Flashing Alley Lights with 15° Horizontal Adjustment	117.00
	JDLF**	Two Red, Blue and/or Amber Flashing LR11 Super-LED® Modules in Alley Light Positions, with 15° Horizontal Adjustment	230.00

All models are 12 Volt D.C. only unless otherwise noted above. For other voltages contact factory.
***** Replace symbol in model number with letter indicating lens color or LED color desired: **A** = Amber; **B** = Blue; **C** = Clear/White; **R** = Red; **G** = Green
# Replace symbol in model number with letter indicating SPLIT lens or LED color desired: **D** = Red/Clear or White; **E** = Blue/Clear or White; **F** = Amber/Clear or White; **H** = Green/Clear or White, **J** = Red/Blue; **K** = Red/Amber; **L** = Red/Green; **M** = Blue/Amber **†** (to be discontinued, check availability) (special order, check availability, non-returnable, non-cancelable)
! Indicate length desired: 5 foot, 6 foot, 7 foot or 8 foot **$** Indicates Lower Price

↓†† - Special Order, Non-Returnable, Non-Cancelable. See "Made-To-Order" Statement on Table of Contents Page of this Price List.

	MODEL	DESCRIPTION	LIST
	JCTLS1	One LR11 Super-LED® Flashing Take-Down Light, for Single Center Section, with 15° Horizontal Adjustment	70.00
	JCTLS12	Two LR11 Super-LED® Flashing Take-Down Lights, for Two Center Sections, with 15° Horizontal Adjustment	117.00
	JCTLS1D	One Dual LR11 Super-LED® Flashing Take-Down Lights, for Single Center Section, with 15° Horizontal Adjustment	117.00
	JTDLED1	One Super High Intensity LED Take-Down, for Center Section of a 50" Lightbar	116.00
	JTDLED2	Two Super High Intensity LED Take-Down Lights	230.00
	JWLLED2	Two Super High Intensity LED Work Lights	230.00
	JXALF1L	Two Super-LED® External Alley Lights, for Standard End Section	309.00
	JXALF**L	Two Red, Blue and/or Amber Super-LED® Modules in External Alley Light Positions, for Standard End Section	244.00
	JBTTLED	Two LED Brake/Turn/Tail Lights	195.00
	JTA2W	Two Wire Control Traffic Advisor™, Standard Feature if Appropriate Number of Lightheads are Purchased	
	JTACNTL	Traffic Advisor™ Includes Internal, External Harness and TACTL5, Lightheads Purchased Separately. When Purchased with Lightbar Only. For Use with CON3™ Center Module Only	568.00
	JTACBL	Traffic Advisor™ Includes Internal and External Harness, for use with CCSRNTA3, Lightheads Purchased Separately. When Purchased with Lightbar Only. For Use with CON3™ Center Module Only	230.00
	WCC9SUB	Substitute WCC9 WeCan® Controller for WeCan® Electronic Control Point Module. When Purchased with WeCan® JV & JY Series Lightbars Only, ADD	167.00
	DELWCCP	Delete WeCan® Control Point, for use with JV and JY Series Only - DEDUCT	39.00
††	JDSCBL	Driver Side Cable Exit, in Place of Passenger Side	
	JBULK18	Bulk Package of 18 Justice® Series Lightbars, In Place of Standard Individually Boxed Lightbars-DEDUCT	60.00

Justice® Super-LED® Competitor™ Series Lightbars
Black Base with Clear Outer Lenses Standard. Standard Current Switching with Scan-Lock™ Flash Patterns, Pattern Override Mode and Passenger Side Cable Exit. (For Mounting Options, See Optional Mounting Kits).

Justice® "JC" Competitor™ Series Super-LED®, Includes Four Corner Linear-LED® Modules with 9 Super-LED®s Per Module.

	JC4****	44" 4 Amber, Blue, Red and/or White	1133.00
	JC8****	50.125" 4 Amber, Blue, Red and/or White	1220.00
	JC2****	56.25" 4 Amber, Blue, Red and/or White	1305.00
	JC0****	62.375" 4 Amber, Blue, Red and/or White	1404.00

Justice® "JE" Competitor™ Series Super-LED®, Includes Four Corner Linear-LED® Modules with 6 Super-LED®s Per Module.

	JE4****	44" 4 Amber, Blue, Red and/or White	1020.00
	JE8****	50.125" 4 Amber, Blue, Red and/or White	1107.00
	JE2****	56.25" 4 Amber, Blue, Red and/or White	1191.00
	JE0****	62.375" 4 Amber, Blue, Red and/or White	1289.00

Justice® Competitor™ Series Options

	JDC*	One CON3™, Amber, Blue, Red or White	104.00
	JDH*	One LTR3™, for Use in Center Section Only, Amber, Blue, Red or White	104.00
	JDL*	One LIN6™, Amber, Blue, Red and/or White	167.00
	JHALF1	Two LR11 Super-LED® Steady-Burn Alley Lights with 15° Horizontal Adjustment	183.00
	JHTLS2	Two LR11 Super-LED® Steady-Burn Take-Down Lights with 15° Horizontal Adjustment	183.00
	JHCTLS1	Two LR11 Super-LED® Center-Mounted Steady-Burn Take-Down Lights with 15° Horizontal Adjustment for two center sections	183.00
	JHCTLS1D	One Dual LR11 Super-LED® Take-Down Light, for Single Center Section, with 15° Horizontal Adjustment	183.00
	JHTDALL1	Four LR11 Super-LED®s, Two Steady-Burn Take-Down and Two Steady-Burn Alley Lights with 15° Horizontal Adjustment	285.00
	JHCTAL1	Four LR11 Super-LED®, Two Center-Mounted Steady-Burn Take-Down and Two Steady-Burn Alley Lights with 15° Horizontal Adjustment for two center sections	285.00
	JHCTAL1D	Four LR11 Super-LED®, One Dual LR11 Center-Mounted Steady-Burn Take-Down Light, for Single Center Section and Two Steady-Burn Alley Lights with 15° Horizontal Adjustment	285.00
	JHFLASH	Flasher for Flashing Take-Down or Flashing Work Lights, Please Specify	117.00
	JHBTTLED	Two LED Brake/Tail/Turn Lights	276.00
	JTACNTL	Traffic Advisor™, Includes Internal and External Harness and TACTL5, Lightheads Purchased Separately. When Purchased with Lightbar Only. For Use with CON3™ Center Module Only	568.00
	JTACBL	Traffic Advisor™ Internal and External Harness, for use with CCSRNTA3, Lightheads Purchased Separately. When Purchased with Lightbar Only. For Use with CON3™ Center Module Only	230.00
††	JDSCBL	Driver Side Cable Exit, in Place of Passenger Side	
	DELWCCP	Delete WeCan® Control Point, for use with Justice Competitor Series Plus Lightbars Only - DEDUCT	39.00
	JBULK18	Bulk Package of 18 Justice® Series Lightbars, In Place of Standard Individually Boxed Lightbars-DEDUCT	60.00

Century™ Elite Series LED Lightbars

Century™ Elite Series LED Lightbars, Includes Four Corner Linear-LED® Modules.

	CE4****	44", 4 Amber, Red, Blue or White	900.00
	CE8****	50", 4 Amber, Red, Blue or White	979.00
	Century™ Elite Series Options		
	CEDLX*	One Linear12™ LED Amber, Red, Blue or White	159.00
	CETAT8	Eight TIR Lamp Amber LED Traffic Advisor™, Requires No Special Control Head, For CE4, 44", Models Only	556.00
	CETAL5	Five LED Lamp Amber Linear-LED® Traffic Advisor™, Requires No Special Control Head, For CE8, 50", Models Only	785.00
	CTLS1	Two LR11 LED Take Down Lights	117.00
	CALF1	Two LR11 LED Alley Lights	117.00

Towman's™ Super-LED® Series Lightbars

Individual Control of Front and/or Rear Lightheads. All Models Include 4 Corner Amber Linear-LED® Modules, LED Work Lights, LED Brake/Tail/Turn Lights.

Towman's™ Freedom® IV Series, Includes LED Brake/Tail/Turn and LED Work Lights

	F40BAAAA	**NEW** 60" Long, Low Current, 3 Slide Bolt Mounting Brackets, Amber, and Eight Inboard Modules	4685.00
	F4EDLA	**NEW** One Single Color Long Economy DYAD™ Lighthead, Amber	130.00
	Towman's™ Liberty™ II WeCan® Series		
	IW0BAAAA	60" Long, 4 Slide Bolt Mounting Brackets, Amber, Four Corner and Six Inboard	3490.00
	IWDL*	One Single Color Long 6 Super-LED® Lighthead, Amber, Blue, Red or White	173.00
	IWDS*	One Single Color Short 3 Super-LED® Lighthead, Amber, Blue, Red or White	120.00
	Towman's™ Justice® Competitor™ Series, Includes LED Work Lights Unless Specified.		
††	JF0TAAAA	62.375" Long, 3 Slide Bolt Mounting Brackets, Amber	1552.00
	JF0BAAAA	62.375" Long, 3 Slide Bolt Mounting Brackets, Amber and 6 CON3™ Amber	1828.00
††	JF0DAAAA	62.375" Long, 3 Slide Bolt Mounting Brackets, Amber with a Five CON3™ Traffic Advisor™, No Work Lights	2177.00
	JF0FAAAA	62.375" Long, 3 Slide Bolt Mounting Brackets, Amber with 16 CON3™ Amber and LED Brake/Tail/Turn, No Work Lights	2196.00
	JDC*	One CON3™, Amber, Blue, Red or White	104.00
	Towman's™ Century™ Series		
	CW0BAAAA	60" Long, 3 Slide Bolts Mounting Brackets, Amber with 4 Amber Inboard Modules	1569.00
	CDT6A	Optional, One Amber TIR6™ Inboard Module	71.00
	CEDLXA	One Amber LIN12™ Super-LED®	159.00

NFPA Lightbars

Meeting NFPA 1901 Zone "A" Upper Lighting Requirements, For Available Options, Contact Factory. (For Mounting Options, See Optional Mounting Kits).

NFPA Edge® Freedom® IV F4N Low Current DYAD™Series Linear Super-LED® Lightbars, ZONE "A" UPPER, All Models Include Clear Outer Lens, Freight Surcharge May Apply.

	F4N2VLED	55", Four Red Corners and Four Front (2 Red/2 White)	2790.00
	F4N0VLED	60", Four Red Corners and Four Front (2 Red/2 White)	3269.00
	F4N7VLED	72", Four Red Corners and Four Front (2 Red/2 White)	3269.00
	F4N2QLED	55", Two Red Front Corners and Four Front (2 Red/2 White) and Two End Red, Square Ends	2790.00
	F4N0QLED	60", Two Red Front Corners and Four Front (2 Red/2 White) and Two End Red, Square Ends	3269.00
	F4N7QLED	72", Two Red Front Corners and Four Front (2 Red/2 White) and Two End Red, Square Ends	3269.00
	F4NMINI	**$** Two 21.5" Mini Freedom® IVs, Each Lightbar Consists of Two Red Front Corners, Two Front Center White and One Red End, Sold in Pairs	3306.00
	NFPA Justice® Series Super-LED®, ZONE "A" UPPER, All Models Include Clear Outer Lens.		
††	JE2NFPA	56", Four Corner Red Linear-LED®s, Six Front CON3™s (4 Red/2 White)	1828.00
††	JE0NFPA	62", Four Corner Red Linear-LED®s, Six Front CON3™s (4 Red/2 White)	1912.00
	Options for NFPA Lightbars		
	MKEZ7	1-1/2" Permanent Mount / ALL	48.00
	MK8H	5" Permanent Mount (Cast Aluminum) / ALL / ALL	121.00
	MK9S	Slide Bolt Brackets For Flat Surface Mounting (2 ea.) 48"/52"	59.00
	MK20S	Slide Bolt Brackets For Flat Surface Mounting (3 ea.) 60"/72"	95.00

4500 Series Surface Mount Lightbars

4500 Plus Super-LED® Build-A-Bar™ Series, Not All Options Available on All Lightbars, 4500B Series is a Build-A-Bar, All Inner Lightheads Purchased Separately.

††	45B±±	4500 Series Build-A-Bar™, ±± Insert Length 38" or 44"Long	359.00
††	45B52	4500 Series Build-A-Bar™, 52" Long	457.00
††	45B52*	4500 Series Build-A-Bar™, 52" Long, with Center-Mounted LED ICC Lights, Replace * with Color of ICC light, A = Amber or R = Red	457.00
††	45B±±	4500 Series Build-A-Bar™, ±± Insert Length 60" or 72" Long	666.00
††	45B±±*	4500 Series Build-A-Bar™, ±± Insert Length 60" or 72" Long, with Center-Mounted LED ICC Lights, Replace * with Color of ICC light, A = Amber or R = Red	666.00

All models are 12 Volt D.C. only unless otherwise noted above. For other voltages contact factory.
***** Replace symbol in model number with letter indicating lens color or LED color desired: **A** = Amber; **B** = Blue; **C** = Clear/White; **R** = Red; **G** = Green
# Replace symbol in model number with letter indicating SPLIT lens or LED color desired: **D** = Red/Clear or White; **E** = Blue/Clear or White; **F** = Amber/Clear or White; **H** = Green/Clear or White, **J** = Red/Blue; **K** = Red/Amber; **L** = Red/Green; **M** = Blue/Amber **†** (to be discontinued, check availability) **††** (special order, check availability, non-returnable, non-cancelable)
! Indicate length desired: 5 foot, 6 foot, 7 foot or 8 foot **$** Indicates Lower Price

↓†† - Special Order, Non-Returnable, Non-Cancelable. See "Made-To-Order" Statement on Table of Contents Page of this Price List.

	MODEL	DESCRIPTION	LIST
††	45B±±	4500 Series Build-A-Bar™, ±± Insert Length 76" Long	730.00
††	45B±±*	4500 Series Build-A-Bar™, ±± Insert Length 76" Long, with Center-Mounted LED ICC Lights, Replace * with Color of ICC light, A = Amber or R = Red	730.00
††	45B±±	4500 Series Build-A-Bar™, Insert Length 82", 84", 86", 88" or 90" Long, Freight Surcharge May Apply	827.00
††	45B±±*	4500 Series Build-A-Bar™, Insert Length 82", 84", 86", 88" or 90" Long, with LED ICC Lights, Replace * with Color of ICC light, A = Amber or R = Red, Freight Surcharge May Apply	827.00
††	45KFL	Interior KKK Front Super-LED® Lighting Package, Includes Two Corner Red, Two 400 Series Red and Two 400 Series White Linear-LED®s	1569.00
††	45KRL	Interior KKK Rear Super-LED® Lighting Package, Includes Two Corner Red, Two 400 Series Red, Two 400 Series Amber Linear-LED®s and Halogen Load Lights	1672.00
††	45DLOUTA	Delete Outboard Two Amber ICC Lights Only	
††	45DLOUTR	Delete Outboard Two Red ICC Lights Only	
††	45DLCNTA	Delete Center Amber ICC Light Only	
††	45DLCNTR	Delete Center Red ICC Light Only	
††	45CL*	Add One Single Color Corner Linear-LED® Lighthead, Amber, Blue, Red or White	272.00
††	45ADRB*	ROTA-BEAM™ Super-LED® Beacon, Red, Blue, Amber or White	416.00
††	45FL*	Add One Single Color 400 Series Linear-LED® Lighthead, Amber, Blue, Red or White	246.00
††	45ADL8*	Add One Single Color 700 Series Super-LED® Lighthead (Flashing), Red, Blue or Amber	246.00
††	45ADLS8*	Add One Single Color 700 Series Super-LED® Lighthead (Steady), Amber, Blue, Red or White (Flasher Purchased Separately)	246.00
††	45LFLASH	Add One Internal Flasher & Harness Only, For up to Two 400 or 700 Series Linear-LED® Super-LED® Lightheads	95.00
††	45TA	Super-LED® Traffic Advisor™ and Halogen Load Light Upgrade, for use with 4500B Series 82" or Larger	1808.00
††	45KFH	Interior KKK Front Halogen Lighting Package, Includes Three Halogen Modules	338.00
††	45KRH	Interior KKK Rear Halogen Lighting Package, Includes Three Halogen Modules and Two Load Lights	470.00
††	45LRLOAD	Add a Pair of Triple (6 LR11's total) LR11 Super-LED® Load Lights	461.00
††	45ALOAD	Add Two Load Lights	135.00
††	45ADDHAL	Add One 700 Series Halogen Lighthead	123.00
††	45ADDSTR	Add One 700 Series Strobe Lighthead	133.00
††	45ADDAST	Add One Outboard Angled Strobe Lighthead	133.00
††	45ADROTA	Add One Rotator	116.00
††	795H	GTT Self-Contained LED IR Opticom™ Emitter, Refer to GTT Opticom™ Emitters Section for Pricing	
††	45795H	Installation of 795H in a 4500 Series Lightbar, No Charge when Purchased with 795H	

Options, Mounting Kits
For Legacy®, Freedom® IV, Justice® & Liberty™ II Model/Year/Length, Available at Time of Lightbar Purchase ONLY. (For Mounting Kit Options and Replacement Strap & Mounting Kits, See Replacement Parts, Mounting Kits & Strap Kits).

Chevrolet, with Lightbar Purchase Only.

	MKEA81	Caprice / 2011-2017 / 43"-44"	105.00
	MKEZ81	Caprice / 2011-2017 / 44"-48"	79.00
	MKAJ81	Caprice / 2011-2017 / 44"-49	89.00
	MKEZ95	Colorado / 2015-2017 / Liberty, Liberty™ II, Freedom® and Freedom® IV 48"-50" or Justice 55"	79.00
	MKEZ63	Colorado Pickup / 2004-2011 / 48"	79.00
	MKEZ45	GMC 3500 Truck / 1999-2011 / and GMC 2500 / 2003-2011 / 52"-55"	79.00
	MKEZ90	Impala / 2014-2017 / 48"-50" (Not for Use with Special Service Package)	79.00
	MKEZ70	Impala PPV / 2006-2016 / 48"-50"	79.00
	MKEA70	Impala PPV Low Profile Adjustable / 2006-2016 / 43"-44"	105.00
	MKEZ71	RV/Suburban / 2007-2013, Tahoe / 2007-2013 / 52"-55"	79.00
	MKEZ96	Suburban (Roof Rack Mount) / 2015-2017 / 55"-60"	79.00
	MKAJ71	RV/Suburban / 2007-2013, Tahoe / 2007-2013, Adjustable Leveling Foot /52"-55"	89.00
††	MKEZ45	Silverado Pickup / 1999-2006 (2007 Classic) / 52"-55"	79.00
	MKEZ73	Silverado Pickup / 2007-2013 / 52"-55"	79.00
	MKEZ93	Tahoe / 2015-2017 / 52"-55"	79.00
	MKEZ91	Silverado 1500 / GMC 1500 Pickup / 2014-2016 / 52"-55"	79.00

Chrysler, with Lightbar Purchase Only.

††	MKEZ69	Charger / 2005-2010 / 48"-50"	79.00
	MKEZ82	Charger / 2011-2017 / 48"-50"	79.00
	MKEA84	Charger / 2011-2017 / 43"-44"	105.00
††	MKEA69	Charger Low Profile Adjustable / 2005-2010 / 43"-44"	105.00
	MKEZ85	Durango / 48"-50" / 2011-2017	79.00
††	MKEZ62	Durango / 2004-2010 / 48"-50"	79.00
††	MKAJ62	Durango, Adjustable Leveling Foot / 2004-2010 / 48"-50"	89.00
	MKEZ79	Ram 1500-3500 / 2010-2011 / 52"-55"	79.00
	MKEZ86	Ram 1500 / 2012-2017 / 52"-55"	79.00

Ford, with Lightbar Purchase Only.

	MKEZ51	Escape Hybrid / 2005-2012 / 48"-50"	79.00
	MKEZ89	Escape / 2013-2017 / 48"-50"	79.00
††	MKEZ38	Excursion, For Edge® Series / 2000-2006 / 55"-60"	79.00
††	MKEZ74	Expedition (Low Profile Rack Mount) / 2007-2017 / 52"-55"	79.00
††	MKEZ60	Expedition / 2003-2017 / 52"-55"	79.00
	MKEZ55	Explorer / 2002-2010 / 48"-50"	79.00
	MKEZ94	F-150 / 2015-2017 / Justice® 62"	79.00
	MKAJ94	F-150 / 2015-2017 / Liberty™ II, Legacy®, Freedom® and Freedom® IV 54"	89.00
	MKEA94	F-150 / 2015-2017 / Original Liberty™ 54" (Not Liberty™ II) or Justice® 56"	105.00
††	MKEZ61L	F-150 / 2004-2014 / 52"-55"	79.00
††	MKEZ61	F-150 / 2004-2014 / 60"	79.00
††	MKEZ38	F-250/F-350/F-450/F-550 Super-Duty / 1999-2016 / 60", Edge® Only	79.00
	MKEZ38L	F-250/F-350/F-450/F-550 Super-Duty / 1999-2016 / 54", Edge® Only	79.00
	MKEZ88	Fusion / 2013-2017 / 48"- 50"	79.00
	MKEA76	Police Interceptor / 2013-2017 / 43"-44"	105.00
	MKEZ76L	Police Interceptor / 2013-2017 / 48"-50"	79.00
	MKEZ83	Police Interceptor Utility / 2013-2017 / 48"-55"	79.00

Toyota, with Lightbar Purchase Only.

	MKEZ97	**NEW** Tacoma / 2016-2017 / 48"	79.00

Permanent Mount, with Lightbar Purchase Only.

	MKEZ7	1-1/2" Permanent Mount / ALL	47.00
	MKAJ7	Adjustable Leveling Foot for 1-1/2" Permanent Mount / ALL	73.00
	MK8H	5" Permanent Mount (Cast Aluminum) / ALL / ALL	118.00
	MK9S	Slide Bolt Brackets for Flat Surface Mounting (2 ea.) 48"/55"	59.00
	MK20S	Slide Bolt Brackets for Flat Surface Mounting (3 ea.) 60+"	93.00
	MKEZ29	1-1/2" Mounting Foot with Strap Hardware (Straps Purchased Separately)	55.00
	MKEA29	Low Profile Adjustable Foot with Strap Hardware (Straps Sold Separately)	84.00
	MK7SS2	Stainless Steel Heavy Duty 10° Adjustable Permanent Mount Feet, Low	189.00
	MK7SS4	Stainless Steel Heavy Duty 10° Adjustable Permanent Mount Feet, High	215.00

Replacement Parts, Mounting Kits & Strap Kits

Replace # with the Vehicle # Listed Above.

Replacement Strap Kits & Mounting Kits

	RMKEZ#	Replacement Mounting Kit Includes Feet, Hardware & Straps of your Choice	161.00
	RMKEZ29	Replacement 1 1/2" Mounting Foot with Strap Hardware (Straps Purchased Separately)	95.00
	RMKEA29	Replacement MKEA29 Mounting Foot with Strap Hardware (Straps Purchased Separately)	118.00
	STPKT#	Straps and Bolts Only for Mounting Kit, For Use with MKEZ or MKAJ Only	95.00
	STPEA70	Straps and Bolts Only for MKEA70 Mounting Kit, Impala / 2006-2016	95.00
††	STPEA69	Straps and Bolts Only for MKEA69 Mounting Kit, Charger / 2005-2016	95.00
	RMKEZ7	Replacement 1-1/2" Permanent Mounting Kit #7	95.00
	RMK9S	Replacement Slide Bolt Mounting Kit #9S (2 ea.)	95.00
	RMK20S	Replacement Slide Bolt Mounting Kit #20S (3 ea.)	128.00
	RMK8H	Replacement 5" Riser Mounting Kit #8H	129.00
	RMKAJ#	Replacement Adjustable Leveling Foot, Includes Feet, Hardware and Choice of Strap # 16, 52, 54, 62, 71 or 72	180.00
	NOTE	All straps are special ordered and NON-RETURNABLE. Some modification may be required by the end user to adapt these straps to fit exact vehicle roof line and door jamb positions. This list is intended as a GUIDE ONLY to assist in obtaining the closest strap for vehicle make and fit, and DOES NOT GUARANTEE an exact fit in every case.	

Options, Low Profile Mounting Kits

For Legacy® and Liberty II™ Series Lightbars Only

Chevrolet

	MKLP81	Caprice / 2011-2017 / 48"- 50"	112.00
	MKLP95	Colorado / 2015 - 2017 / 48"-50"	112.00
	MKLP70	Impala PPV / 2006-2016 / 48" - 50"	112.00
	MKLP90	Impala / 2014-2017 / 48"-50" (Not for Use with Special Service Package)	112.00
	MKLP91	Silverado 1500 / GMC 1500 Pickup / 2015-2016 / 52" -55"	112.00
	MKLP93	Tahoe / 2015-2017 / 52"- 55"	112.00

Chrysler

	MKLP82	Charger / 2011-2017 / 48" - 50"	112.00
	MKLP86	Ram 1500 / 2012-2017 / 52" - 55	112.00

Ford

	MKLP38	F-250/F-350/F-450/F-550 Super Duty / 1999-2016 / 55" -60"	112.00
	MKLP88	Fusion / 2013-2017 / 48" - 50"	112.00
	MKLP76	Police Interceptor / 2013-2017 / 48" - 50"	112.00
	MKLP83	Police Interceptor Utility / 2013-2017 / 48" - 55"	112.00

Toyota

	MKLP97	**NEW** Tacoma / 2016-2017 / 48"	112.00

All models are 12 Volt D.C. only unless otherwise noted above. For other voltages contact factory.
***** Replace symbol in model number with letter indicating lens color or LED color desired: **A** = Amber; **B** = Blue; **C** = Clear/White; **R** = Red; **G** = Green
# Replace symbol in model number with letter indicating SPLIT lens or LED color desired: **D** = Red/Clear or White; **E** = Blue/Clear or White; **F** = Amber/Clear or White; **H** = Green/Clear or White, **J** = Red/Blue; **K** = Red/Amber; **L** = Red/Green; **M** = Blue/Amber **†** (to be discontinued, check availability) ** ** (special order, check availability, non-returnable, non-cancelable)
! Indicate length desired: 5 foot, 6 foot, 7 foot or 8 foot **$** Indicates Lower Price

↓†† - Special Order, Non-Returnable, Non-Cancelable. See "Made-To-Order" Statement on Table of Contents Page of this Price List.

	MODEL	DESCRIPTION	LIST
	Replacement Parts, Low Profile Mounting Kits & Strap Kits For Legacy® Series Lightbars Only		
	Replacement Strap Kits & Low Profile Mounting Kits		
	MKLP7	Low Profile Permanent Mounting Foot, When Purchased with Lightbar	103.00
	MKLP29	Replacement 1 1/2" Low Profile Mounting Foot with Strap Hardware (Straps Purchased Separately)	94.00
	MKLPQDU	Low Profile Foot with Universal Quick Disconnect Mounting Brackets	135.00
	RMKLPQDU	Replacement Low Profile Foot with Universal Quick Disconnect Mounting Brackets	161.00
	STPKTQDU	Straps and Bolts Only with Universal Quick Disconnect Mounting Brackets	95.00
	RMKLP#	Replacement Low Profile Mounting Foot, Include Feet, Hardware and Straps of your Choice	161.00
	STPLP#	Straps and Bolts, Use With MKLP Only	95.00
	NOTE	All straps are special ordered and NON-RETURNABLE. Some modification may be required by the end user to adapt these straps to fit exact vehicle roof line and door jamb positions. This list is intended as a GUIDE ONLY to assist in obtaining the closest strap for vehicle make and fit, and DOES NOT GUARANTEE an exact fit in every case.	
	24 VDC Products Refer to Series Section for Options. For other 24 VDC Models that are Not Listed Below, Contact Factory for Pricing and Availability.		
	Super-LED® Beacons, 24 VDC		
††	L31H*F4	L31 Super-LED® Beacon, Class 1, High Dome, Amber, Blue or Red, Flat Mount, Cast Base	599.00
††	L32L*F4	L32 Super-LED® Beacon, Class 1 in Amber, Class 2 in Red or Blue, Low Dome, Amber, Blue or Red, Flat Mount, Cast Base	375.00
††	L21H*P4	L21 Super-LED® Beacon, Class 1, High Dome, Amber or White, Perm/Pipe/"J" Hook Mount, Polycarbonate Base	343.00
††	L21L*P4	L21 Super-LED® Beacon, Class 1, Low Dome, Amber or White, Perm/Pipe/"J" Hook Mount, Polycarbonate Base	343.00
††	L22H*P4	L22 Super-LED® Beacon, Class 2 Amber, High Dome, Amber, Blue, Red or White, Perm/Pipe/"J" Hook Mount, Polycarbonate Base	198.00
††	L22L*P4	L22 Super-LED® Beacon, Class 2 Amber, Low Dome, Amber, Blue, Red or White, Perm/Pipe/"J" Hook Mount, Polycarbonate Base	198.00
††	L10HAP4	L10 Super-LED® Beacon, Class 1, High Dome, Amber, Perm/Pipe Mount, Polycarbonate Base	164.00
††	L10LAP4	L10 Super-LED® Beacon, Class 1, Low Dome, Amber, Perm/Pipe Mount, Polycarbonate Base	164.00
	Lightheads, 24 VDC		
††	0SU0EDCR	0S Series White Illumination Light, Clear Lens	40.00
††	20U0CDCR	4" Round, 2G Series, Compartment Light, Level 3 Intensity, Optional Mounting Kit Purchased Separately	138.00
††	50S03ZAR	500 Series TIR6™ Super-LED®, Amber with Amber Lens	167.00
††	50T03ZBR	500 Series TIR6™ Super-LED®, Blue with Blue Lens	167.00
††	50W03ZRR	500 Series TIR6™ Super-LED®, Red with Red Lens	167.00
††	60U0EHCR	6" Round Surface Mount, Super-LED® Ambulance Interior Light	204.00
††	60U0EJCS	6" Round Surface Mount, 6 LED Interior Light, White, Includes Switch	185.00
††	7SU0ENZR	700 Series, Gradient Opti-Scenelight™, Surface Mount	309.00
††	9SU0ENZR	900 Series, Gradient Opti-Scenelight™, Surface Mount, Includes Flange	546.00
††	90BTT4	900 Series, 5mm Brake/Tail/Turn, 2 Flash Patterns	389.00
††	IONSM*4	**NEW** ION™ Series Surface Mount, Amber, Blue, Red or White, Black Housing	180.00
††	WIONSM*4	ION™ Series, Wide Angle Surface Mount, Amber, Blue, Red or White, Black Housing	180.00
††	WIONSC*4	ION™ Series, Wide Angle Surface Mount, Amber, Blue, Red or White, Chrome Housing	200.00
††	LINZ6*24	LINZ6™ Series Super-LED®, Amber, Blue, Red or White, with Clear Lens	156.00
††	M2*24	M2 Series Super-LED® with Scan-Lock™ Flash Patterns, Amber, Blue, Red or White, with Color Lens	174.00
††	M2W*24	M2 Series Super-LED®, Warning, Wide Angle, Red, Blue, Amber or White, with Color Lens	174.00
††	M2W*C24	M2 Series Super-LED®, Warning, Wide Angle, Red, Blue, Amber or White, with Clear Lens	174.00
††	M4*24	M4 Series Super-LED® with Scan-Lock™ Flash Patterns, Amber, Blue, Red or White, with Color Lens	188.00
††	M6*24	M6 Series Super-LED® with Scan-Lock™ Flash Patterns, Amber, Blue, Red or White, with Color Lens	229.00
††	M6*C24	M6 Series Super-LED® with Scan-Lock™ Flash Patterns, Amber, Blue, Red or White, with Clear Lens	229.00
††	M6BTT24	M6 Series Brake/Tail/Turn, Red Lens	167.00
††	M6BUW24	M6 Series Back-Up, Clear Lens	223.00
††	M6ZC24	M6 Series Super-LED® Gradient Scene Light	386.00
††	M6T24	M6 Series Amber Turn Signal, Sequential Arrow, Amber Lens	145.00
††	M7*24	M7 Series Super-LED® with Scan-Lock™ Flash Patterns, Amber, Blue, Red or White, with Color Lens	229.00
††	M7ZC24	M7 Series Super-LED® Gradient Scenelight	229.00

††	M9*24	M9 Series Super-LED® with Scan-Lock™ Flash Patterns, Amber, Blue, Red or White, with Color Lens	343.00
††	MCRNS*4	Micron™ Series Super-LED® with Scan-Lock™ Flash Patterns, Amber, Blue, Red or White, Black Flange	156.00
††	NP6B4W	Pioneer™ Nano Work/Scene Lights, 6-LED, with Bail Mount, White	260.00
††	NP6B4B	Pioneer™ Nano Work/Scene Lights, 6-LED, with Bail Mount, Black	260.00
††	MPB4B	Micro Pioneer™ Super-LED® Work Light, Bail/Stud Mount, Black Housing	421.00
††	MPB4W	Micro Pioneer™ Super-LED® Work Light, Bail/Stud Mount, White Housing	421.00
††	MPP4W	Micro Pioneer™ Super-LED® Work Light, Low Profile Pedestal/Swivel Mount, White Housing	579.00
††	MPR4W	Micro Pioneer™ Super-LED® Work Light, Straight Recessed Mount, White Housing	516.00
††	PELCB4	Perimeter Enhancement Light, White Super-LED®, Black Housing	210.00
††	PELCC4	Perimeter Enhancement Light, White Super-LED®, Chrome Housing	210.00
††	PFP14	Single Panel, Pioneer Plus™, Super-LED® Flood Light, White Housing	858.00
††	PFP24	Dual Panel, Pioneer Plus™, Super-LED® Flood Light, White Housing	1497.00
††	PFS14	Single Panel Pioneer™ Combination Flood/Spot, White Housing	858.00
††	PFA1P04	Single Panel Pioneer™ with Pole/Pedestal Mount Adapter	884.00
††	PFP1P04	Single Panel Pioneer Plus™ with Pole/Pedestal Mount Adapter	1100.00
††	PFS14P	Single Panel Pioneer™ with Pole/Pedestal Mount Adapter, Combination Flood/Spot, White Housing	1100.00
††	PFS14P1	Single Panel Pioneer™ with Pole/Pedestal Mount Adapter and On/Off Switch, Combination Flood/Spot, White Housing	1126.00
††	PFS24	Dual Panel Pioneer™ Combination Flood/Spot, White Housing	1497.00
††	PFS24P	Dual Panel Pioneer™ with Pole/Pedestal Mount Adapter, Combination Flood/Spot, White Housing	1741.00
††	PFS24P1	Dual Panel Pioneer™ with Pole/Pedestal Mount Adapter and On/Off Switch, Combination Flood/Spot, White Housing	1766.00
††	PFBP12C4	PAR-36 Round 12-Super-LED® Flood Light, With Pedestal/Swivel Mount and an On/Off Switch, Chrome Rear Cover	453.00
††	P46HHS4	PAR-46, Super-LED® Hand Held Spotlight, Includes Cigar Cord, On/Off Switch and Magnet	486.00
††	VTX609*4	Vertex™, Omni Directional Lighthead, Red, Blue, Amber or White, 9' Cable	135.00
††	WPLWZ3A4	LINZ6™ Super-LED®, Two Wing Plow Amber Lights, One for When the Plow is in Use and One for When Stowed	514.00
	Sirens, 24 VDC		
††	ALPHA24R	Alpha Series Siren, Remote, for use with Remote Switches, Purchase Separately	253.00
††	ALPHA24S	Alpha Series Siren, Self-Contained	288.00
††	BETA124R	Beta Series Full Function Siren, Remote, for use with Remote Switches, Purchase Separately	255.00
††	295SL102	295SL Series, Full Function Siren (up to Two 100 Watt speakers), Includes Microphone	392.00
	Responder® LP Series Lightbars, Aluminum Base, 24 VDV		
††	R2LPPA4	Six LIN6™ Super-LED® Modules, Permanent Mount, Amber, 24 VDC	864.00
††	R2LPMA4	Six LIN6™ Super-LED® Modules, Magnetic Mount, Amber, 24 VDC	888.00
	Mini Edge® Freedom® IV Series Lightbars, 24 VDC		
††	F4M1111P	**NEW** Permanent Mount, Amber	1485.00
††	F4M5555P	**NEW** Permanent Mount, Red	1485.00
††	F4DLA4	**NEW** One Single Color Long 12 Super-LED® Lighthead, Amber	237.00
††	F4DLR4	**NEW** One Single Color Long 12 Super-LED® Lighthead, Red	237.00
	Liberty™II, SOLO™, 24 VDC, IX Series and Options, Low Current		
††	IX4****4	44" Four Single Color Corner Modules, Red, Blue, Amber or White	1584.00
††	IX8****4	48" Four Single Color Corner Modules, Red, Blue, Amber or White	1584.00
††	IX2****4	54" Four Single Color Corner Modules, Red, Blue, Amber or White	1584.00
††	IWDL*4	One Single Color Long 6 Super-LED® Lighthead, Amber, Blue, Red or White	173.00
††	IWDS*4	One Single Color Short 6 Super-LED® Lighthead, Amber, Blue, Red or White	120.00
††	ITL124	Two Long 12 Super-LED® Take Down Lights	408.00
††	ITL64	Two Long 6 Super-LED® Take Down Lights	233.00
††	ITS64	Two Short 6 Super-LED® Take Down Lights	233.00
††	IA34	Two Short 6 Super-LED® Alley Lights with 15° Horizontal Adjustment	131.00

Green Products
Refer to Series Section for Options Mounting.

L31 & L32 Super-LED® Beacons, Cast Aluminum Base. Includes Scan-Lock™ Flash Patterns, Hi/Low Power, Cruise and Synchronize Features.

††	L31HGF	**NEW** Green with Green Dome, Flat Mount	821.00
††	L32L4F	Green with Clear Dome, Flat Mount	512.00
††	L32LGF	Green, Flat Mount	512.00
††	L32LGM	Green, Magnetic Mount	546.00
††	L32LGV	Green, Magnetic/Suction Mount	548.00
	Lightheads, Super-LED® (Unless Specified) with Scan-Lock™ Flash Patterns		
††	0SG00MCR	Green Marker/Clearance Light with Clear Lens	49.00
††	2EG00ZGR	**NEW** 4" Round Series, Extended Lens, Green with Green Lens	204.00
††	40G02ZCR	400 Series, Single Level, Green with Clear Lens	162.00
††	40G02ZGR	400 Series, Single Level, Green with Green Lens	162.00
††	50G02ZCR	**NEW** 500 Series, Green with Clear Lens	200.00

All models are 12 Volt D.C. only unless otherwise noted above. For other voltages contact factory.
***** Replace symbol in model number with letter indicating lens color or LED color desired: **A** = Amber; **B** = Blue; **C** = Clear/White; **R** = Red; **G** = Green
# Replace symbol in model number with letter indicating SPLIT lens or LED color desired: **D** = Red/Clear or White; **E** = Blue/Clear or White; **F** = Amber/Clear or White; **H** = Green/Clear or White, **J** = Red/Blue; **K** = Red/Amber; **L** = Red/Green; **M** = Blue/Amber **†** (to be discontinued, check availability) †† (special order, check availability, non-returnable, non-cancelable)
! Indicate length desired: 5 foot, 6 foot, 7 foot or 8 foot **$** Indicates Lower Price

↓ †† - Special Order, Non-Returnable, Non-Cancelable. See "Made-To-Order" Statement on Table of Contents Page of this Price List.

	MODEL	DESCRIPTION	LIST
††	50G02ZGR	**NEW** 500 Series, Green with Green Lens	200.00
††	60G02FCR	600 Series, Green with Clear Lens	248.00
††	60G02FGR	600 Series, Green with Green Lens	248.00
††	70G02FGR	700 Series, Green with Green Lens	248.00
††	IONG	ION™ Series, Green with Clear Lens	229.00
††	IONSMG	**NEW** ION™ Series, Surface Mount, Green with Clear Lens	224.00
††	LINZ6G	LINZ6™ Series, Green with Clear Lens	168.00
††	M4G	M4 Series, Green	219.00
††	M6G	M6 Series, Green	271.00
††	M6GC	M6 Series, Green with Clear Lens	271.00
††	M7G	M7 Series, Green	271.00
††	M9G	M9 Series, Green	406.00
††	MCRNSG	**NEW** Micron™ Series, Surface Mount, Green with Clear Lens	185.00
††	RSG02ZCR	LIN3™ Series, Green with Clear Lens	111.00
††	RSG03ZCR	TIR3™ Series, Green with Clear Lens	111.00
††	VTX609G	Vertex™ Series, Green with Clear Lens	151.00
	Lightbars, Mini, Super-LED®		
††	R2LPHPG	**NEW** Responder® LP Series, Mini Lightbar, LIN6™, Permanent Mount, Green with Green Dome	876.00
††	MC16MCG	**NEW** Century™ Series, Mini Lightbar, 16", Magnet Mount, Green with Clear Dome	495.00

Replacement Parts, Lens Kits

Lens kit worksheets are available from your local distributor or your authorized managing sales representative.

	Edge® Classic, 94 & 96 Series, Lens Kits		
††	LENSKIT1	Lens Kit for Classic Edge® Lightbar	260.00
††	LENSKIT2	Lens Kit for Classic Edge® Lightbar	345.00
††	LENSKIT3	Lens Kit for Classic Edge® Lightbar	345.00
	Edge® 9M Series, Lens Kits		
††	9MLENKT1	Lens Kit for Edge® 9M Series Lightbar	260.00
††	9MLENKT2	Lens Kit for Edge® 9M Series Lightbar	345.00
††	9MLENKT3	Lens Kit for Edge® 9M Series Lightbar	345.00
	Edge® Ultra 9U & Freedom Series, Lens Kits		
††	9ULENKT1	Lens Kit for Edge® Freedom® Series Lightbar	260.00
††	9ULENKT2	Lens Kit for Edge® Freedom® Series Lightbar	345.00
††	9ULENKT3	Lens Kit for Edge® Freedom® Series Lightbar	345.00
	Liberty™ Series Lens Kits, Not for use with 500 Series Alleys		
††	SLENKT1	Lens Kit for Liberty™ Series Lightbars for use with LR11 Alley Lights	260.00
††	SLENKT2	Lens Kit for Liberty™ Series Lightbars for use with LR11 Alley Lights	345.00
††	SLENKT3	Lens Kit for Liberty™ Series Lightbars for use with LR11 Alley Lights	345.00
	Liberty™ Series Lens Kits, Includes Two LR11 Alley Lights		
††	SLENLRK1	Lens Kit for Liberty™ Lightbar, Includes Two LR11 Alley Lights	379.00
††	SLENLRK2	Lens Kit for Liberty™ Lightbar, Includes Two LR11 Alley Lights	469.00
††	SLENLRK3	Lens Kit for Liberty™ Lightbar, Includes Two LR11 Alley Lights	469.00

Replacement Parts, Bulbs For Whelen Lights

Pictorial reference is located at the end of this Price List.

	Halogen Bulbs, 12 Volts, Unless Specified, Snap-In, Bulb Only.		
††	H27DSN28	27 Watt, 24 Volt, Stop/Tail/Turn	52.00
††	H35DSN12	35 Watt Halogen Dual Filament for Interior Light Only	57.00
††	H35SN24	35 Watt, 24 Volt (Yellow Dot)	52.00
	Halogen Bulbs, 12 Volts, H-1		
††	H55H112	55 Watts, For Delta™ Rotators, Guardian™ Models G1 and G2 Series	40.00
	Halogen Bulbs, 12 Volts, Unless Specified, Twist-Lock, Includes Twist-Lock Adapter & Snap-In Bulb.		
††	H35HSC12	35 Watt Halogen Bulb for 810 Scene Light	63.00
††	H35ASC24	35 Watt Halogen Bulb for 24 Volt 810 Scene Light	63.00
††	H35DTL12	35 Watt Halogen Bulb, 3 Position Connector for Interior Light Only, Dual Filament	63.00
	Strobe Tubes		
††	UNI	Universal Flash Tube (Replaces S406, S600, Z360)	121.00
††	4ELTUBE	400 Series Linear Strobe Tube/Reflector Assembly	139.00
††	4ECTUBE	4E Series Combination Rear Strobe w/Halogen Lamp Reflector Assembly	209.00
††	500LTUBE	500 Series Linear Strobe Tube/Reflector Assembly	173.00
††	58L4TUBE	508E Series Linear Strobe Tube/Reflector Assembly, 4 Screw Lens Design	269.00
††	81L4TUBE	810E Series Linear Strobe Tube/Reflector Assembly, 4 Screw Lens Design	269.00
††	6ELTUBE	600/6E Series Linear Strobe Tube/Reflector Assembly	184.00
††	7ELTUBE	700/7E Series Linear Strobe Tube/Reflector Assembly	184.00
††	7ECTUBE	7E Series Combination Rear Strobe w/Halogen Lamp Reflector Assembly	209.00
††	80DTUBE	800D/1200D Series Helix 1-1/2 Turn, 3 Pin Plug-In Base Strobe Tube, Each	120.00
††	80TUBE	800C/1200C Series Helix 1-1/2 Turn Strobe Tube with black reflector 1200C Series, 800C Series, FHEAD / GHEAD / XHEAD Series	120.00

††	900STUBE	900 Series Non-Linear Strobe Tube/Reflector Assembly	195.00
††	9UTUBE	Edge® 9M/Ultra Corner Tube/Reflector	139.00
††	LFLTUBE	Edge® LFL Corner Tube/Reflector	139.00
††	DIRECTIO	Large Directional Strobe Tube with Reflector (MN200S Style) 9000FF Series, 9000FM, 9801 Series, 9804 Series, 9806 Series, AdvantEdge®+Plus™ Series	164.00
††	FT10A	3-Pin "U" Strobe Tube, Plug-in, VP410 Series, VP415 Series, 2004, 2012, 2015	62.00
††	FT1510	Linear Tube for 1510 Series	58.00
††	FT20A	3-Pin Helix 1-1/2 turn Strobe Tube, Plug-in, VP420 Series, VP422 Series, 2022, G5 & G7 Series	71.00
††	FT25	Flash Tube, 2500 Series Beacons	71.00
††	LINEAR14	Linear Strobe/Reflector Module, Centurion™ Lower Level CL14 Series Strobe, FastTrax™ Front Strobe	139.00
††	LINEAR17	Linear Strobe/Reflector Module, Dash-King™ Series, Centurion™ Lower Level CL17 Series Strobes	139.00
††	M469	1 1/2 Turn Helix Strobe Tube with Reflective Base, V-Head	121.00
††	REPTSSTR	Twin Side Beam™ Dual Strobe Reflector Assembly	216.00
††	SSTUBE	Super Strobe® Helix 1-1/2 turn Strobe Tube and Polished Reflector, DOT6H, S360C/S360D/S360S Series, SS361, SS363, SS364	120.00
††	TURBOASY	Linear Strobe/Reflector Module for "Classic" Edge® and Edge+Plus™	139.00
††	TURB6DUP	Duplex Linear Strobe/Reflector Module for 96 Series Edge® Bars, Dash-King 2000	139.00
††	S30HACP	Clear Strobe Tube Only (Less Cable), Soft Plug-In with Flange	102.00
††	S30HACPD	Clear Strobe Tube Only (Less Cable), Soft Plug-In with Flange, Deutsch® Waterproof Connector	114.00
††	S30HAC	Clear Strobe Tube Only (Less Cable), Flange Mount	102.00
††	S30HAA	Amber Strobe Tube Only (Less Cable), Flange Mount	139.00
††	S30HACD	Clear Strobe Tube Only (Less Cable), Flange Mount, Deutsch® Waterproof Connector	114.00
††	S30HAAD	Amber Strobe Tube Only (Less Cable), Flange Mount, Deutsch® Waterproof Connector	156.00
	DOT3® Systems with Deutsch® Waterproof Connectors		
††	REPDIRWD	DOT3® 100 Series Rear Strobe Assembly, Replaces Old Style AMP W.P., (P/N 02-0341827-00C)	190.00
††	REPSTTWD	DOT3® 100/200 Series Brake/Tail/Turn Bulb Assembly, Replaces Old Style AMP W.P., (P/N 34-0061856-00C)	76.00
††	DIRECTWD	DOT3® 100 Series Rear Strobe Assembly with Deutsch® Waterproof Connector	178.00
	DOT3® Systems with AMP® Waterproof Connectors		
††	H35TL12W	DOT3® 100/200 Series Back-up Light Assembly	82.00
††	REPDIRWA	DOT3® 100 Series Rear Strobe Assembly	184.00
	Snap-In Bulbs		
††	H20SN12	20 Watt (Green Dot) , TA836 Series, TA870A Series, TA837 Series, TA1652H Series, TA1664H Series, BLTA, 97 Edge® Bar Series/All Dual Halogen Models, SSNF™ Series Halogen Lightheads	31.00
††	H27SN12	27 Watt (Red Dot), 508 Series, 64 Back Series, 810 Series, 830 Scenelight, AdvantEdge®+Plus™ & Super AdvantEdge®+Plus™ Lightbars, Towman®s™ Lightbars, Edge®+Plus™, B-Link™ Bar Full Size Halogen Modules, Dash-Miser™ Halogen Models	31.00
††	H35SN12	35 Watt (White Dot), 4000 Motor/Reflector Assembly/Brushless, 52 Series, DOT3® Systems, Edge® California Steady-Burn, RDX Series	31.00
††	H35HSN12	35 Watt, Horizontal Filament (Gold Dot), GH Series, 64 Series, 73 Series, 97 Scenelight, 5000 Super AdvantEdge®+Plus™	31.00
††	H50SN12	50 Watt, Horizontal Filament (Blue Dot), 97 Series Scenelight, 9E Series, 7E Series (Flashing Only)	31.00
††	H50ASN12	50 Watt, Halogen Bulb for RB6P, RB6D, B6R and Centurion™ Lightbars	31.00
††	H60SN12	60 Watt, 7E Series, 9E Series, RB6T Series	31.00
††	STOPSN12	Brake/Tail/Turn Light, DOT3® Systems (Incandescent Globe Style)	31.00
	Linear Snap-In Flash Tubes		
††	TURBO5	Linear Strobe Tube only for 900, 97 & 9E Linear, and 81E Linear. Snap-In with Stiff Trigger Lead 4.75" Long	72.00
††	TURBO64	Linear Strobe Turbo Tube for 64 Series, Snap-in 6" long, 508 Series Linear, 1997 Edge® Bars, Super AdvantEdge®+Plus™, TA864S	72.00
	Bi-Pin Halogen Bulbs		
††	H20W12V	20 Watt, TA4000A, TA9000A Series, TA9000D	16.00
††	H27W12V	27 Watt, 9000 Series Alley Light (Full Size), 9000FM Work Light, CR12/212 Series, GRLHAL, TS200H, TS200C	16.00
††	H35W12V	35 Watt, 4000 Series Motor/Reflector Assembly with Brushes, Val-U-Bar™ Series Motor/Reflector Assembly with Brushes	16.00
††	H50W12V	50 Watt	16.00
	Twist-Lock Halogen & Strobe Bulbs		
††	S30TL	Twist-Lock Helix 1-1/2 Turn Strobe Tube, 52 Series Twist-Lock, 56 Series Twist-Lock, 64 Series Twist-Lock, 73 Series Twist-Lock, 9000 Series, 97 Series Twist-Lock, DashMiser™/DashMiser Plus™ Twist-Lock Series, GSF/GSE Series, SBS8S	83.00
††	TA20TL12	20 Watt, 2 Position Connector, TA836A, TA837A, TA838A, TA839A, TA870A, TA1620A, TA1622A	36.00
††	H27TL12	27 Watt, 3 Position Connector, 9000 Series Take-Down and Flashers, DashMiser™/DashMiser Plus™ Halogen Series	36.00
††	H35TL12	35 Watt, 3 Position Connector, GHF/GHE Series, 52 Series Halogen, 64 Series, 64 Series Opti-Scenelight™, 73 Series, 73 Series Opti-Scenelight™	36.00

All models are 12 Volt D.C. only unless otherwise noted above. For other voltages contact factory.
***** Replace symbol in model number with letter indicating lens color or LED color desired: **A** = Amber; **B** = Blue; **C** = Clear/White; **R** = Red; **G** = Green
# Replace symbol in model number with letter indicating SPLIT lens or LED color desired: **D** = Red/Clear or White; **E** = Blue/Clear or White; **F** = Amber/Clear or White; **H** = Green/Clear or White, **J** = Red/Blue; **K** = Red/Amber; **L** = Red/Green; **M** = Blue/Amber **†** (to be discontinued, check availability) (special order, check availability, non-returnable, non-cancelable)
! Indicate length desired: 5 foot, 6 foot, 7 foot or 8 foot **$** Indicates Lower Price

↓†† - Special Order, Non-Returnable, Non-Cancelable. See “Made-To-Order” Statement on Table of Contents Page of this Price List.

	MODEL	DESCRIPTION	LIST
††	H50TL12	50 Watt, 3 Position Connector, 97 Series, 97 Series Opti-Scenelight™	36.00
††	BRAKTL12	Brake/Tail/Turn, 3 Position Connector, (Incandescent), 52 / 64 / 73 & 97 Series Brake/Tail/Turn (Globe Style, Not Flat Back Style)	36.00

WHELEN®
ENGINEERING COMPANY, INC.

2017 PICTORIAL REFERENCE GUIDE FOR STROBE, HALOGEN & INCANDESCENT REPLACEMENT BULBS

STROBE

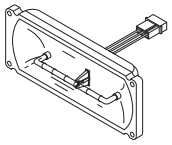

DIRECTIO
02-0340362-00

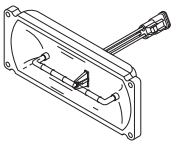

REPDIRWD
01-0442196-40
DIRECTWD
02-0342196-00

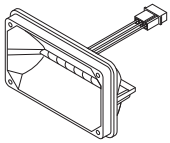

4ELTUBE
02-0262861-00
02-0362824-00

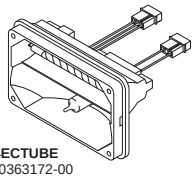

4ECTUBE
02-0363172-00

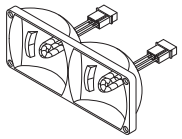

REPTSSTR
02-0361109-02

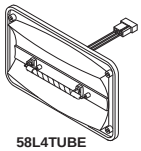

58L4TUBE
02-0362189-00

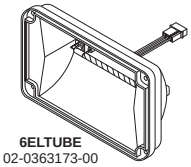

6ELTUBE
02-0363173-00

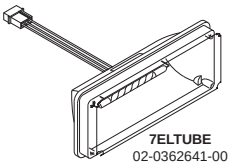

7ELTUBE
02-0362641-00

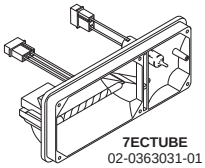

7ECTUBE
02-0363031-01

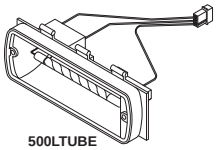

500LTUBE
02-0363292-00

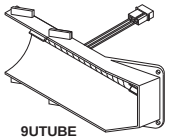

9UTUBE
02-0363171-00

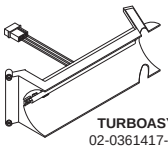

TURBOASY
02-0361417-00

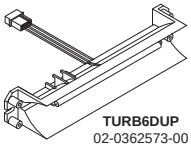

TURB6DUP
02-0362573-00

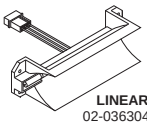

LINEAR14
02-0363042-00

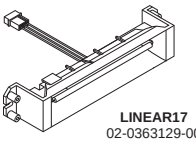

LINEAR17
02-0363129-00

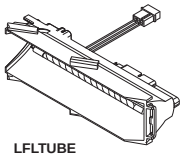

LFLTUBE
02-0363332-00

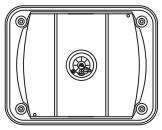

900STUBE
02-0383678-00

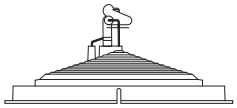

SSTUBE
01-0468256-00
36-0468256-00

80TUBE
01-0461513-00
36-0361513-00

UNI
36-0261100-00

TURBO5
5" Length
36-0142511-00

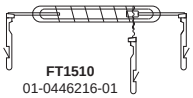

FT1510
01-0446216-01

TURBO64
6" Length
01-0441675-00
36-0141675-00

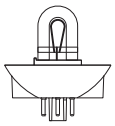

FT20A
01-0441567-W0
36-0341567-00

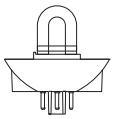

FT10A
01-0441566-W0
36-0341566-00

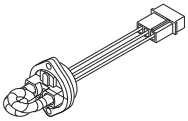

S30HA*
01-0461403-( )0

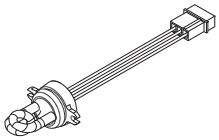

S30HA*P
01-0463017-( )1

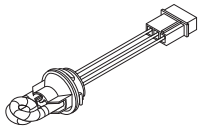

S30TL
01-0461281-00

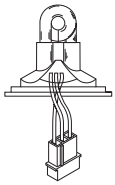

M469
01-0470044-02

FT25
01-0443008-00
36-0343008-00

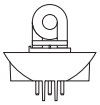

80DTUBE
01-0442400-00
36-0342400-00

HALOGEN & INCANDESCENT

H20W12V
01-0420781-00
34-0213030-9J

H27W12V
01-0421757-00
34-0021757-00

H35W12V
01-0421758-00
34-0021758-00

H50W12V
01-0421759-00

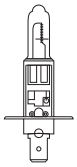

H55H112
34-02120B0-000

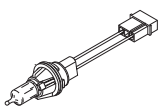

H27TL12
01-0462375S02

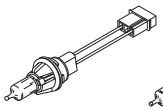

H35TL12
01-0462375S00

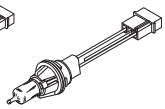

H35DTL12
01-0462503-01

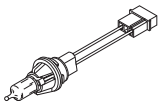

H50TL12
01-0462375S05

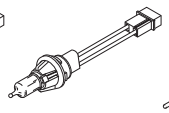

TA20TL12
01-0462380-01

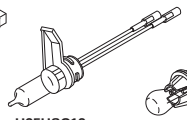

H35HSC12
01-0467838-01
34-0067833-01

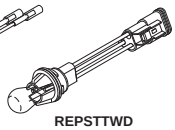

REPSTTWD
01-0462507-00

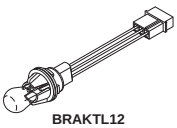

BRAKTL12
01-0462503-00
34-0061391-00

H20SN12
Green Dot
01-0441987-04
34-0041987-04

H27SN12
Red Dot
01-0441987-03
34-0063001-03

H27DSN28
01-0463001-01
34-0063001-01

H35SN12
White Dot
01-0441987-00
34-0041987-00

H35HSN12
Gold Dot
01-0441987-05
34-0041987-05

H35SN24
Yellow Dot
01-0441987-02
34-0041987-02

H50SN12
Blue Dot
01-0441987-01
34-0041987-01

H60SN12
01-0441987-07
34-0041987-07

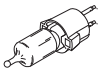

H50ASN12
Red/White Dot
01-0441987-06
34-0041987-06

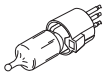

H35DSN12
Silver Dot
01-0463001-00
34-0063001-00

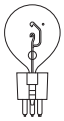

STOPSN12
3 PINS
01-0462389-00
34-0062389-00

Note: # Indicates Industry Standard Numbers, not a Whelen Part Number

11777P-091516

© Copyright 2016 Whelen Engineering Company, Inc.

WHELEN® USER DIRECT WARRANTY (FOR AUTOMOTIVE PRODUCTS ONLY)

Whelen Engineering Company, Inc. warrants products of its manufacture against defects in material and workmanship. This is provided that the product has been installed and operated in accordance with the manufacturer's recommendations. During the warranty period (see below) the Factory Repair Center or an Authorized Whelen Repair Center† will repair or replace (at its option) any parts or electronic assemblies of the unit which disclose a defect in material or workmanship. The Repair Center will return the repaired unit, transportation cost prepaid.

The above warranty is between the first purchaser (ultimate user) only and Whelen Engineering Company, Inc. (manufacturer). **No prior authorization is required for returning Whelen products for warranty consideration.** Each Whelen product sold is covered only by the official warranty in effect at time of purchase.

This warranty is not applicable to any Whelen product that has failed from damage as a result of incompatible chemicals (including de-icing or road treatment), cleaning products or due to abuse, misuse, improper installation, excessive voltages, or alterations to the product that affects, in the manufacturer's judgment, intended use and service. Whelen will not be held liable for any incidental or consequential damages, and assumes no responsibility or liability for expenses incurred in the removal and/or re-installation of products requiring service and/or repair; nor the packaging, handling, and shipping to the Factory Repair Center or Authorized Whelen Repair Center†; nor for the handling of products returned from the repair center after service or repair.

There are no other warranties, expressed or implied, including, but not limited to, any implied merchantability or fitness for a particular use. Whelen Engineering Company, Inc. reserves the right to modify this warranty statement at any time; or discontinue, modify, or upgrade any products of its manufacture with design improvements without prior notice.

The use of magnetic or vacuum/suction mounted warning lights mounted on the roof or exterior of a vehicle in motion is at the sole discretion and risk of the user. Whelen Engineering makes no warranties or guarantees of equipment used in this way.

All power plugs/cigar plugs, incandescent and halogen bulbs, polycarbonate/plastic materials, radar products, aviation equipment, industrial products and high power voice/siren systems are not covered by this warranty (see applicable warranty statement).

All Non-Whelen manufactured items that are sold by Whelen are covered by that manufacturer's warranty, and are excluded from this warranty statement (such as, GTT Emitters, batteries). This warranty will be void when using or substituting other than all-genuine Whelen system components, such as remote head assemblies, xenon flash tubes, shielded cables, strobe power supplies, siren amplifiers and siren speakers. This warranty gives you specific rights, and you may also have other rights which vary from state to state.

STANDARD / 2 YEAR WARRANTY

Whelen products are covered by a direct warranty for up to a maximum two years from date of purchase (not to exceed three years from date of manufacture), with proof of purchase. In accordance with the policy statement described herein, the unit may be returned directly to the factory or to an Authorized Whelen Repair Center† for warranty consideration. Whelen siren speakers, when used with a Whelen siren amplifier, are covered by a 2 year warranty from the date of manufacture. Heavy-Duty motor assemblies (so marked) are covered by a direct warranty for up to three years from date of manufacture. For warranty consideration, both the siren speakers and motor assemblies are subject to the conditions and steps described herein.

SIRENS, LED PRODUCT, CONTROL HEADS AND SWITCH BOXES

CenCom®, CanTrol®, 295HFS and 295SLS: Electronic circuit boards are covered by a 5 year warranty.

LED Lightheads, IO Boards, and Flashers: Electronic circuit boards are covered by a 5 year warranty.

295SL100 Series, Howler™, Alpha™, Beta™, Epsilon™, HHS, Gamma™ and WPS series: Electronic circuit boards are covered by a 2 year warranty.

Siren, Traffic Advisor™ Control Heads, and Switch Boxes: Electronic circuit boards are covered by a 2 year warranty.

Mechanical components, ie Switches, relays, microphones, housings, mounting brackets and hardware are covered for 2 years for defect in material or workmanship. All other electronic circuit and IO boards not expressed herein are covered by a 2 year warranty.

Warranty starts from date of manufacture.

12 MONTH WARRANTY — BACK-UP ALARMS

Whelen Back-Up Alarms are covered by a 12 month warranty and are subject to the conditions and steps described herein.

WARRANTY — LIGHTBAR POWER SUPPLY

All repairable warranty and non-warranty Edge® style lightbar strobe power supplies will be replaced with a compatible new power supply. If out of initial warranty period but less than 10 years old, the charge will be a flat fee of $210.00

6 MONTH WARRANTY — STROBE POWER SUPPLIES/FLASH TUBES AND OBSOLETE/DISCONTINUED PRODUCTS

If a Strobe Power Supply, Strobe Flash Tube component or an obsolete/discontinued product of a "Whelen" brand product is returned to Whelen within 6 months of the date which is affixed to the unit, Whelen will repair or replace that unit free of charge ONE TIME ONLY, subject to the conditions and steps herein.

WHELEN ENGINEERING COMPANY OUT-OF-WARRANTY FACTORY REPAIR PROGRAM

If found to be repairable, the Whelen Factory Repair Center (only) will repair Non-Lightbar Electronic Strobe Power Supplies for $155.00 each. All other repairs (non-strobe) will be $125.00 per unit. This does not include replacement of any other electro-mechanical parts including flash tubes, polycarbonate domes, motors, or hardware items.

Follow the "Steps To Be Taken For Return" noted below, and include a check or money order. For Whelen products older than 10 years, repair charges will be determined upon examination only (minimum charge is $255.00). Contact factory service center for further details.

STEPS TO BE TAKEN FOR WARRANTY RETURN:

1) Whelen products are to be returned **freight prepaid** to the: Whelen Factory Repair Center Building B, 51 Winthrop Road, Chester, CT 06412-0684; or an Authorized Whelen Repair Center†. Do not ship by bus.

2) A copy of the sales receipt must be returned with the defective unit to qualify for warranty coverage from date of purchase.

3) Include a short statement explaining the problem.

4) Include your name, address, and day-time telephone number.

5) Whelen and its Authorized Repair Centers will, via UPS, ship back the repaired unit **freight prepaid**, usually within a few days after its receipt.

WHELEN®
ENGINEERING COMPANY, INC.
51 Winthrop Road, Chester, CT 06412-0684
(860) 526-9504 • www.whelen.com

— EFFECTIVE 12/21/16, REPLACES ALL PREVIOUSLY PUBLISHED SERVICE POLICIES —

† The only AUTHORIZED WHELEN REPAIR CENTER(S) are predetermined by the Whelen Factory via official listing obtained from Whelen Engineering Company, Chester, CT.

 © 2016 Whelen.

INDEX

0 ..... 16, 19
0AC0EDCR 4
0S*00FCR 4
0S*00MCR 4
0S*00SCR 4
0SB00SCR 4
0SC0EDCR 4
0SG00MCR 44
0SU0EDCR 43
1SWITCH 21
20C0CDCD 5
20C0CDCR 5
20R00XRR 5
20U0CDCR 43
295HFS2 22
295HFS2X 22
295HFSA7 22
295HFSC9 22
295HFSDA 22
295SDA1 22
295SDA2 22
295SL100 22
295SL101 22
295SL102 44
295SLSA1 22
295SLSA6 22
295SSA1 22
295SSA2 22
2E*00Z*R 5, 20
2ED00ZCR 5
2EE00ZCR 5
2EG00ZGR 44
2EJ00ZCR 5
2F*00Z*R 5, 20
2FLANGEB 5
2FLANGEC 5
2G*00F*R 5
2GBKT1 6
2GFLANGB 5
2GFLANGC 5
2GROMMET 5, 6
2SWITCH 21
3FLANGEC 5
3GROMMET 5
3PC0C0CD 13
3S*00F*R 5
3SBCCDCR 5
3SC0CDCR 5
3SR0CDRR 5
3SRCCDCR 5
3SWITCH 21
40**5SCR 6
40*02Z*R 6
40A00AAR 6
40BTT 6
40BUH 6
40BUV 6
40C00VCR 6
40G02ZCR 44
40G02ZGR 44
43LENS* 2
45795H 41
45ADDAST 41
45ADDHAL 41
45ADDSTR 41
45ADL8* 41
45ADLS8* 41
45ADRB* 41
45ADROTA 41
45ALOAD 41
45B±±* 40, 41
45B±± 40, 41
45B52* 40
45B52 40
45CL* 41
45DLCNTA 41
45DLCNTR 41
45DLOUTA 41
45DLOUTR 41
45FL* 41
45KFH 41
45KFL 41
45KRH 41
45KRL 41
45LFLASH 41
45LRLOAD 41
45TA 41
4ECTUBE 45
4EFLANGE 6
4EGRILB 6
4EGRILP 6
4ELTUBE 45
4FLANGEB 6
4SWITCH 21
4TSMAB 6
4TSMAC 6
4V3* 6
50**2ZCR 6
50**3ZCR 6
50*02Z*R 6
50*03Z*R 6
500LTUBE 45
50A02SA1 6
50AA2SA2 6
50AC2ZCR 6
50AC3ZCR 6
50BC2ZCR 6
50BC3ZCR 6
50CC2ZCR 6
50CC3ZCR 6
50CR2ZCR 6
50CR3ZCR 6
50G02ZCR 44
50G02ZGR 45
50S03ZAR 43
50T03ZBR 43
50W03ZRR 43
58L4TUBE 45
5BKT1 6
5BRUSH 6
5FLANGEB 6
5FLANGEC 6
5FLANGEP 6
5G*00F*R 7
5GBKT1 ..... 6, 7
5GBOXB 7
5GC00WCR 7
5GC0CCCR 7
5GFLANGB 7
5GFLANGC 7
5GM2LRC 6
5GROMMET 6
5IM2LRC 6
5LSMAB 6
5LSMAC 6
5TSMAB 6
5TSMAC 6
5V*02Z*R 6
5V1* 6
5V3* 6
60*02F*R 7
60*02S*R 7
60A00TAR 7
60BR6FCR 7
60BTT 7
60C00VCR 7
60C00WCR 7
60C0EHCR 8
60C0EJCS 8
60C0ELZR 7
60CBEGCS 9
60CREGCS 8
60F000*R 7
60G02FCR 45
60G02FGR 45
60J000CR 7
60K000XR 7
60K000YR 7
60RA6FCR 7
60RC6FCR 7
60U0EHCR 43
60U0EJCS 43
60X000RR 7
60X000TR 7
64FKIT 7
6EFLANGE 7
6EHDLTMK 7
6ELTUBE 45
6FLANGEB 7
6RB* 7
6RB*C 7
6SC0ENZR 7
70*02F*R 7
70*02S*R 7
70A00TAR 8
70BR6FCR 7
70BTT 7
70C00VCR 7
70C00WCR 8
70C0ELZR 7
70CREGCS 7, 9
70F000*R 8
70G02FGR 45
70K000ZR 8
70RA6FCR 7
70RC6FCR 7
73FKIT 8
795H ... 24, 33, 36, 37, 41
7CAST3 8
7ECTUBE 45
7EFLANGE 8
7ELTUBE 45
7FLANGEB 8
7GCV6LRC 8
7HTH5FC 8
7HTH5RC 8
7HTM5FC 8
7HTM5RC 8
7PT5R 8
7PTH5F 8
7PTM5F 8
7SC0ENZR 7
7SU0ENZR 43
80C00EZR 9
80C0EHCR 9
80CBEHCR 9
80CREHCR 9
80DTUBE 45
80TUBE 45
810CA0ZR 8
810TRIM 8
81L4TUBE 45
86CE1 9
8WC00EZR 9
90**5F*R 8
90**5S*R 8
900STUBE 46
90A00TAR 8
90BTT 8
90BTT4 43
90E000ZR 8
90F000*R 8
90FLANGB 8
90FLANGC 8
90J000CR 8
90RA5FCR 8
90RB5FCR 8
90RC5FCR 8
97FKIT 8
9EFLANGE 8
9FLANGEB 8
9MLENKT1 45
9MLENKT2 45
9MLENKT3 45
9SC0ENZR 8
9SU0ENZR 43
9ULENKT1 45
9ULENKT2 45
9ULENKT3 45
9UTUBE 46
AFL530 4
AFM1660 4
AFM560 4
ALPHA1 22
ALPHA12S 22
ALPHA2 22
ALPHA24R 44
ALPHA24S 44
ALPHA3 22
ALPHA4 22
ALPHA5 22
ALPHASL 20, 22
AVN1# 1
AVN1* 1
AVN2** 1
AVN2LRBB 1
AVN2LRRB 1
AVN2LRRC 1
AVN2LRRR 1
AVNBKT1 1
AVNBKT2 1
AVNBKT3 1
AVNBKT4 1
AVNBKT5 1
AVNS1* 1
AVNS2** 1
AVNT1BAW 1
AVNT1RAW 1
AVNT1RBA 1
AVNT1RBW 1
AVNT2BAW 1
AVNT2RAW 1
AVNT2RBA 1
AVNT2RBW 1
B6370** 2
B63M7** 2
B6MM**P 2
B6TM**1P 2
BBKT20 3
BBKT30 2
BETA1 22
BETA112R 20, 22
BETA124R 44
BETA2 ..... 20, 22
BETA2BKT 22
BETAMIC 22
BGH 3
BGL 3
BRAKTL12 47
CALF1 40
CAST3 7
CAST3H 7
CAST4V 7
CCSRN3 21
CCSRN35 21
CCSRN36 21
CCSRN3A 22
CCSRN3F 22
CCSRN4DA 21
CCSRNT35 22
CCSRNT36 22
CCSRNT3A 22
CCSRNT3F 22
CCSRNT4F 21
CCSRNT4G 21
CCSRNTA3 22
CCTRIM 22
CDT6A 40
CE4**** 40
CE8**** 40
CEDLX* 40
CEDLXA 40
CETAL5 40
CETAT8 40
CL25C 9
CTLS1 40
CW0BAAAA 40
D2** 1
D4**** 1
D6****** 1
D8§§§§0 1
DBKT3 1
DBKT4 1
DBKT5 2
DELTAC5 25
DELTAC6 25
DELWCCP .. 33, 34, 35, 39
DH2000* 3
DIRECTIO 46
DIRECTWD 46
DL2000* 3
DP2** 1
DP4**** 1
DP6§§§§0 1
DP8§§§§0 1
EPSL1 22
EPSL2S6 22
EPSL2S9 22
F09PC 8
F18PC 8
F27PC 8
F36PC 8
F40BAAAA 40
F41CNT* 34
F41CNTX 34
F42CNT* 34
F42CNTX 34
F42END# 33
F42END* 33
F42ENDX 34
F4500S 33
F4500ST 33

F45PC 8
F4795H 33
F4795HT 33
F48END# 34
F48END* 34
F48ENDX 34
F4A3 33
F4A6 33
F4B****P 27
F4CF* 33
F4DIVIDX 28, 34
F4DL# 33
F4DL* 28, 33
F4DLA4 44
F4DLR4 44
F4DS# 33
F4DS* 33
F4DSCBL 33
F4EDLA 40
F4G*0*0F 27
F4LF* 33
F4M****M 27
F4M****P 27
F4M*0*0F 27
F4M1111P 44
F4M5555P 44
F4MA3 28
F4MA6 28
F4MEND# 28
F4MEND* 28
F4MENDX 28
F4MTATL3 28
F4MTATL6 28
F4MTL6 28
F4N0QLED 40
F4N0VLED 40
F4N2QLED 40
F4N2VLED 40
F4N7QLED 40
F4N7VLED 40
F4NMINI 40
F4R0**** 34
F4R2**** 34
F4R3TS 34
F4R6TL 34
F4R6TS 34
F4R7**** 34
F4RA3 34
F4RA6 34
F4RB* 28, 34
F4RDL* 28, 34
F4RDS* 34
F4RDSC72 34
F4RFLASH 34
F4RWA# 33
F4RWA* 28
F4SF* 33
F4TL6 33
F4TS6 33
F4W0**** 33
F4W2**** 33
F4W4**** 33
F4W7**** 33
F4W8**** 33
F4WA* 33
F4WBTT 33
F4WPHOTO 33
F4X0**** 33
F4X2**** 33
F4X4**** 33
F4X7**** 33
F4X8**** 33
F4XBTT 33
F4XPHOTO 33
F4XTACBL 33
F4XTACTL 33
F54PC 8
F63PC 8
FDFP11*R 5
FDFP11JR 5
FEDC06*R 5
FEDC06DR 5
FEDC06ER 5
FEDC06JR 5
FEFP11*R 5
FEFP11DR 5
FEFP11ER 5
FEFP11JR 5
FLBULK18 33
FLLED** 2
FRDSCBL 34
FT10A 46
FT1510 46
FT20A 46
FT25 46
G321 35
G322 35
G323 35
G324 35
G325 35
G326 35
G341 35
G342 35
G343 35
G344 35
G345 35
G346 35
G381 35
G382 35
G383 35
G384 35
G385 35
G386 35
GAMMA2 22
GB2#### 34
GB2**** 34
GB2ENDX 34, 35
GB4#### 34
GB4**** 34
GB8#### 34
GB8**** 34
GB8ENDX 34, 35
GBA 35
GBA 34
GBAW# 34
GBAW* 34
GBCF* 34, 35
GBCNTX 34, 35
GBDIVIDX 34, 35
GBDL# 34
GBDL* 34
GBDS# 34
GBDS* 34
GBDSCBL 34, 35
GBLF* 34, 35
GBSF* 34, 35
GBTL 34, 35
GBTS 35
GBTS 34
GS2**** 35
GS4**** 35
GS8**** 35
GSAW* 35
GSDL* 35
GSDS* 26, 35
GSPHOTO 34, 35
GSTL* 35
GSTS* 35
GT9****M 26
GT9****P 26
GT9****V 26
GTA 26
GTTS 26
GTTSA 26
H20SN12 46
H20W12V 46
H27DSN28 45
H27SN12 46
H27TL12 46
H27W12V 46
H35ASC24 45
H35DSN12 45
H35DTL12 45
H35HSC12 45
H35HSN12 46
H35SN12 46
H35SN24 45
H35TL12 46
H35TL12W 46
H35W12V 46
H50ASN12 46
H50SN12 46
H50TL12 47
H50W12V 46
H55H112 45
H60SN12 46
HHS2200 22
HOWLER 21
HWLCC11 21
HWLDC15 21
HWLFE13 21
HWLFT11 21
HWLRB11 21
HWLRB13 21
HWLRB14 21
HWLRB18 21
HWLRB19 21
HWLRB2 21
HWLRB20 21
HWLRB21 21
HWLRB22 21
HWLRB23 21
HWLRB4 21
HWLRB7 21
HWLUNI 21
I2# 9
I2SM# 9
I321 38
I322 38
I323 38
I324 38
I325 38
I326 38
I341 38
I342 38
I343 38
I344 38
I345 38
I346 38
I381 38
I382 38
I383 38
I384 38
I385 38
I386 38
I3JA 9
I3JC 9
I3KC 9
I3MC 9
I3SMJA 9
I3SMJC 9
I3SMKC 9
I3SMMC 9
IA3 ..... 36, 37
IA34 44
IB2#### 37
IB2**** 37
IB4#### 37
IB4**** 37
IB4ENDX 37, 38
IB8#### 37
IB8**** 37
IB8ENDX 37, 38
IBCNTX 37, 38
IBDIVIDX 37, 38
IBDL# 36, 37
IBDL* 37
IBDS# 36, 37
IBDS* 37
IBDSCBL 36, 37
IBTS3# 37
IBTS3* 37
IBTS6# 37
IBTS6* 37
ICF* 36, 37
ID08UF6P 31
ID08UFX 31
ID34UF6P 31
ID34UFX 31
ID35UF6P 31
ID35UFX 31
ID37UF6P 31
ID37UFX 31
ID38UF6P 31
ID38UFX 31
ID39UF6P 31
ID39UFX 31
ID42UF6P 31
ID42UFX 31
ID43UF6P 31
ID43UFX 31
ID44UF6P 31
ID44UFX 31
ID45UF6P 31
ID45UFX 31
ID46UF6P 31
ID46UFX 31
ID47UF6P 31
ID47UFX 31
IDTRAY10 32
IDTRAY6 32
IDTRAY8 32
IE34UR8 32
IE35LR8 32
IE35LRZ 32
IE37LR8 32
IE37LRZ 32
IE38LR8 32
IE38LRZ 32
IE45UR8 32
IE46LR8 32
IE46LRZ 32
IED# 32
IES* 31
IETBCA 32
IETRBA 32
IETRBC 32
IETRCA 32
IG2**** 36
IG8**** 36
IH2**** 36
IH8**** 36
IHDC* 36
IJ2#### 37
IJ2**** 37
IJ2END# 36, 37
IJ2ENDX 37, 38
IJ500S 36, 37
IJ500ST 36, 37
IJ795H 36, 37
IJ795HT 36, 37
IJ8#### 37
IJ8**** 37
IJ8END# 36, 37
IJ8ENDX 37
IJCNT* 36, 37
IJCNTX 37, 38
IJDC# 36, 37
IJDC* 37
ILF* 36, 37
INSTLRDX 27
ION# 9
ION* 9
IONBKT1 10
IONBKT2 10
IONBKT4 10
IONBKT5 10
IONBKT6 10
IONBKT7 10
IONG 45
IONGROM 10
IONHD1L 20
IONHD1R 20
IONK1B 10
IONPEDB 10
IONSM# 9
IONSM* 9
IONSM*4 43
IONSMG 45
IONSV1* 10
IONSV1*C 10
IONSV1*W 10
IONSV3* 10
IONSV3*C 10
IONSV3*W 10
IONV1* 10
IONV1*W 10
IONV3* 10
IONV3*W 10
ISF* 36, 37
ISTRAY10 31
ISTRAY6 31
ISTRAY8 31
ISTRAYT 31
IT9****M 27
IT9****P 27
IT9****V 27
ITA 27
ITL12 ..... 36, 37
ITL124 44
ITL3 ..... 36, 37
ITL6 ..... 36, 37
ITL64 44
ITS3 ..... 36, 37
ITS6 ..... 36, 37
ITS64 44
ITTRAY10 32
ITTRAY6 32
ITTRAY8 32
ITTS 27

INDEX

ITTSA 27
IW08UF6P 30
IW08UFX 30
IW0BAAAA 40
IW2**** 36
IW34UF6P 30
IW34UFX 30
IW35UF6P 30
IW35UFX 30
IW37UF6P 30
IW37UFX 30
IW38UF6P 30
IW38UFX 30
IW39UF6P 30
IW39UFX 30
IW4**** 36
IW42UF6P 30
IW42UFX 30
IW43UF6P 30
IW43UFX 30
IW44UF6P 30
IW44UFX 30
IW45UF6P 30
IW45UFX 30
IW46UF6P 30
IW46UFX 30
IW47UF6P 30
IW47UFX 30
IW8**** 36
IWBTTLED 36, 37
IWD§§§00 ..... 30, 31
IWDL* 36, 40
IWDL*4 44
IWDS* 27, 36, 40
IWDS*4 44
IWDTRAY1 32
IWDTRAY6 32
IWDTRAY8 32
IWP§§§§0 31
IWP§§§00 31
IWPHOTO 36, 38
IWSTRAY1 31
IWSTRAY6 31
IWSTRAY8 31
IWSTRAYT 32
IWTACBL 36
IWTACNTL 36
IWTS3* 36
IWTS6* 36
IX08UF5P 30
IX08UF6P 30
IX08UFX 30
IX08UFZ 30
IX2**** 36
IX2****4 44
IX34UF5P 29
IX34UF6P 29
IX34UFX 29
IX34UFZ 29
IX35UF5P 29
IX35UF6P 29
IX35UFX 29
IX35UFZ 29
IX37UF5P 28
IX37UF6P 28
IX37UFX 28
IX37UFZ 28
IX38UF5P 29
IX38UF6P 29
IX38UFX 30
IX38UFZ 29
IX39UF5P 30
IX39UF6P 30
IX39UFX 30
IX39UFZ 30
IX4**** 36
IX4****4 44
IX42UF5P 29
IX42UF6P 29
IX42UFX 29
IX42UFZ 29
IX43UF5P 29
IX43UF6P 29
IX43UFX 29
IX43UFZ 29
IX44UF5P 29
IX44UF6P 29
IX44UFX 29
IX44UFZ 29
IX45UF5P 29
IX45UF6P 29
IX45UFX 29
IX45UFZ 29
IX46UF5P 28
IX46UF6P 28
IX46UFX 29
IX46UFZ 29
IX47UF5P 29
IX47UF6P 29
IX47UFX 29
IX47UFZ 29
IX8**** 36
IX8****4 44
IXBTTLED 36
IXD§§§§0 30
IXP§§§§0 30
IXPHOTO 36
JALF1 38
JBTTLED 39
JBULK18 39
JC0**** 39
JC2**** 39
JC4**** 39
JC8**** 39
JCTLS1 39
JCTLS12 39
JCTLS1D 39
JDC* 28, 38, 39, 40
JDH* 28, 38, 39
JDL# 38
JDL* 38, 39
JDLF** 38
JDSCBL 39
JE0**** 39
JE0NFPA 40
JE2**** 39
JE2NFPA 40
JE4**** 39
JE8**** 39
JF0BAAAA 40
JF0DAAAA 40
JF0FAAAA 40
JF0TAAAA 40
JHALF1 39
JHBTTLED 39
JHCTAL1 39
JHCTAL1D 39
JHCTLS1 39
JHCTLS1D 39
JHFLASH 39
JHTDALL1 39
JHTLS2 39
JTA2W 39
JTACBL 39
JTACNTL 39
JTDLED1 39
JTDLED2 39
JTLS1 38
JV2**** 38
JV4**** 38
JV8**** 38
JWLLED2 39
JXALF**L 39
JXALF1L 39
JY2**** 38
JY4**** 38
JY8**** 38
L10H#P 3
L10HAM 3
L10HAP 3
L10HAP4 ..... 3, 43
L10HAV 3
L10HCP 3
L10L#P 3
L10LAM 3
L10LAP 3
L10LAP4 ..... 3, 43
L10LAV 3
L10LCP 3
L21H*M 3
L21H*P 3
L21H*P4 ..... 3, 43
L21H*V 3
L21L*M 3
L21L*P 3
L21L*P4 ..... 3, 43
L21L*V 3
L22H*M 3
L22H*P 3
L22H*P4 ..... 3, 43
L22H*V 3
L22L*M 3
L22L*P 3
L22L*P4 ..... 3, 43
L22L*V 3
L31H*F 2
L31H*F4 ..... 2, 43
L31H*M 2
L31H*V 2
L31HAFCA 2
L31HAMCA 2
L31HAVCA 2
L31HGF 44
L31HRFN 2
L32L*F 2
L32L*F4 ..... 2, 43
L32L*M 2
L32L*V 2
L32L4F 44
L32LGF 44
L32LGM 44
L32LGV 44
L360BGB 2
L360PMKT 2, 3
L40BG 4
L41*M 4
L41*P 4
L41*V 4
L51*M 3
L51*P 3
L53AM 4
L53AP 3
L6BKT2 17
L6BKT3 18
LEDLOAD 4
LENSKIT1 45
LENSKIT2 45
LENSKIT3 45
LF35 16
LF35A 16
LF35BASE 16
LF35CB12 16
LF35CBAC 16
LF35CBAE 16
LF35E 16
LFLTUBE 46
LINEAR14 46
LINEAR17 46
LINSV2* 17
LINSV2*X 17
LINV2* 17
LINV2*X 17
LINZ6# 17
LINZ6* 17
LINZ6*24 43
LINZ61 17
LINZ62 17
LINZ65 17
LINZ6FC 17
LINZ6G 45
LSK 3
LSVBKT13 18
LSVBKT34 18
LSVBKT35 18
LSVBKT37 18
LSVBKT38 18
LSVBKT42 18
LSVBKT44 18
LSVBKT45 18
LSVBKT47 18
M05ZB 20
M05ZJ 20
M05ZJ2 20
M05ZR 20
M06MB 20
M06MJ 20
M06MJ2 21
M06MR 21
M1BATT 20
M1GROUND 20
M2# 10
M2* 10
M2*24 43
M2*C 10
M2FB 11
M2FC 11
M2GROM 11
M2KTHD1 20
M2PEDB 11
M2PEDC 11
M2W# 11
M2W* 11
M2W*24 43
M2W*C 11
M2W*C24 43
M4###### 20
M4# 11
M4****** 20
M4* 11
M4*24 43
M4*C 11
M4*CS 11
M4*S 11
M469 46
M4B6B 20
M4B6CHRG 20
M4B6L 20
M4B6R 20
M4BRUSH 11
M4BSEP 20
M4CT15B 11
M4DW* 11
M4DWJ 11
M4FB 11
M4FC 11
M4FC400 11
M4FF15B 11
M4G 45
M4TB15B 11
M4TM15B 11
M4V2* 11
M6# 11
M6* 11
M6*24 43
M6*C 11
M6*C24 43
M6*CS 11
M6*S 11
M6BRUSH 11
M6BTT 11
M6BTT24 43
M6BUW 11
M6BUW24 43
M6FB 11
M6FC 11
M6FC600 11
M6FCV2 11
M6FCV3 11
M6FCV4 11
M6G 45
M6GC 45
M6HDLMTK 11
M6P15B 11
M6P15C 11
M6PT5R 12
M6PTH5F 12
M6PTM5F 12
M6T 11
M6T24 43
M6V2* 11
M6V2*C 11
M6WLENX 12
M6ZC 11
M6ZC24 43
M7# 12
M7* 12
M7*24 43
M7*C 12
M7*CS 12
M7*S 12
M7BKT1 12
M7BRUSH 12
M7FB 12
M7FC 12
M7FC700 12
M7G 45
M7WLENX 12
M7ZC 12
M7ZC24 43
M9# 12
M9* 12
M9*24 44
M9*C 12
M9*CS 12
M9*CZ 12
M9*S 12
M92# 12
M9BRUSH 12
M9BTTX 12
M9BUW 12

M9FB 12
M9FC 12
M9FC900 12
M9FCZ900 12
M9G 45
M9HTH5FC 12
M9HTH5RC 12
M9HTM5FC 12
M9HTM5RC 12
M9JCZ 12
M9LZC 12
M9T 12
M9V2* 12
M9V2*C 12
M9VFC900 12
MBADPT14 20
MBCC11** 13
MBCC11JJ 13
MBCT15** 13
MBCT15JJ 13
MBDC11** 13
MBDC11JJ 13
MBFT11** 13
MBFT11JJ 13
MBFX11** 13
MBFX11JJ 13
MBPI06** 13
MC11M* 26
MC11P* 26
MC11S* 26
MC16M* 26
MC16MCG 45
MC16MF 26
MC16MJ 26
MC16P* 26
MC16PF 26
MC16PJ 26
MC16S* 26
MC16SF 26
MC16SJ 26
MC16V* 26
MC16VF 26
MC16VJ 26
MC23M* 26
MC23P* 26
MC23S* 26
MC23V* 26
MCFLED2* 12
MCRNB1 13
MCRNB2 13
MCRNS# 12
MCRNS#X 13
MCRNS* 12
MCRNS*4 44
MCRNS*X 13
MCRNSC# 13
MCRNSC* 13
MCRNSG 45
MCRNT# 13
MCRNT#X 13
MCRNT* 13
MCRNT*X 13
MCSLED2* 12
MIRROR15 4
MIRROR20 ..... 2, 3
MJTDALL1 28
MJY****M 28
MJY****P 28
MJY****V 28
MK20S 40, 42
MK7SS2 42
MK7SS4 42
MK8H 40, 42
MK9S 40, 42
MKAJ62 41
MKAJ7 42
MKAJ71 41
MKAJ81 41
MKAJ94 42
MKEA29 42
MKEA69 41
MKEA70 41
MKEA76 42
MKEA81 41
MKEA84 41
MKEA94 42
MKEZ29 42
MKEZ38 42
MKEZ38L 42
MKEZ45 41
MKEZ51 42
MKEZ55 42
MKEZ60 42
MKEZ61 42
MKEZ61L 42
MKEZ62 41
MKEZ63 41
MKEZ69 41
MKEZ7 ..... 40, 42
MKEZ70 41
MKEZ71 41
MKEZ73 41
MKEZ74 42
MKEZ76L 42
MKEZ79 41
MKEZ81 41
MKEZ82 41
MKEZ83 42
MKEZ85 41
MKEZ86 41
MKEZ88 42
MKEZ89 42
MKEZ90 41
MKEZ91 41
MKEZ93 41
MKEZ94 42
MKEZ95 41
MKEZ96 41
MKEZ97 42
MKLP29 43
MKLP38 42
MKLP7 43
MKLP70 42
MKLP76 42
MKLP81 42
MKLP82 42
MKLP83 42
MKLP86 42
MKLP88 42
MKLP90 42
MKLP91 42
MKLP93 42
MKLP95 42
MKLP97 42
MKLPQDU 43
MMK 3
MPB4B 44
MPB4W 44
MPBB 14
MPBW 14
MPP4W 44
MPPB 14
MPPBBS 14
MPPBCS 14
MPPW 14
MPPWCS 14
MPR15B 14
MPR15W 14
MPR4W 44
MPRB 14
MPRW 14
MXCC11** 13
MXCC11JJ 13
MXCT15** 13
MXCT15JJ 13
MXDC11** 13
MXDC11JJ 13
MXFT11** 13
MXFT11JJ 13
MXFX11** 13
MXFX11JJ 13
NOTE 42, 43
NP3BB 14
NP3BW 14
NP6B4B 44
NP6B4W 44
NP6BB 14
NP6BW 14
NPBKT1 14
NPBKT2 14
OE34UR6 32
OE34UR6T 32
OE45UR6 32
OE45UR6T 32
OEMCRN* 32
OEMCRN*X 32, 33
OEMCTA* 32
OEMCTA*X 32
P28FX11 5
P36HHS 13
P36SLC 13
P36SLCHG 13
P46FL* 14
P46FLCX 14
P46HHS 14
P46HHS4 44
P46S2* 14
P46S2*3 14
P46S2X 14
P46S2X2 14
P46S3*H 14
P46SLC 14
P46SLCHG 14
P46SLCX 14
P46WL* 14
P46WLCX 14
PAH112 23
PAP112 23
PAPEXT15 23
PAR28* 5
PAR28D* 5
PAR28D 5
PAR28DJ 5
PAR28E 5
PAR28J 5
PBA103 15
PBA106U 15
PBA203 15
PBA206U 15
PBAINTC 15
PBAPEDA 15
PBAPEDAL 15
PBAPEDD 15
PBAPEDDL 15
PC1 21
PC2 21
PC3 21
PCC10W 21
PCC10W1 21
PCC4W 21
PCC6W 21
PCC6W1 21
PCC8R 21
PCCS9LW 21
PCCS9RW 21
PCP2AFS 15
PCP2AP 15
PCP2AP1 16
PCP2ASF 15
PCP3 15
PCP3A 15
PCP3AP 16
PCP3AP1 16
PCP3P 16
PCP3P1 16
PCPSM1B 16
PCPSM1C 16
PCPSM2AB 16
PCPSM2AC 16
PCPSM2B 16
PCPSM2C 16
PEIMCT13 4
PEIMFI13 4
PELCB 14
PELCB4 44
PELCC 14
PELCC4 44
PF_#F4# 33
PFA1 15
PFA1F41 16
PFA1F42 16
PFA1LP 15
PFA1P 15
PFA1P04 44
PFA1P1 15
PFA2 15
PFA2F41 16
PFA2F42 16
PFA2P 15
PFA2P1 15
PFBP12 13
PFBP12C 13
PFBP12C4 44
PFBP6 13
PFBP6C 13
PFBS12 14
PFBS12C 14
PFBS12S 14
PFBS6 14
PFBS6C 14
PFBS6S 14
PFLASH 15
PFP1 15
PFP14 44
PFP1AC 15
PFP1AP 15
PFP1AP1 15
PFP1F41 16
PFP1F42 16
PFP1LP 15
PFP1P 15
PFP1P04 44
PFP1P1 15
PFP2 15
PFP24 44
PFP2AC 15
PFP2AP 15
PFP2AP1 15
PFP2F41 16
PFP2F42 16
PFP2P 15
PFP2P1 15
PFP4AWB 16
PFP4AWP 16
PFP4AWP1 16
PFS1 15
PFS14 44
PFS14P 44
PFS14P1 44
PFS1F41 16
PFS1F42 16
PFS1P 15
PFS1P1 15
PFS2 15
PFS24 44
PFS24P 44
PFS24P1 44
PFS2F41 16
PFS2F42 16
PFS2P 15
PFS2P1 15
PLAST3V 7
PLAST4V 7
PLAST4VL 7
PROGRAM1 4
PS*00F*R 17
PSB00FBR 17
PSBKT1 17
PSBKT451 17
PSBP12 14
PSBP12C 14
PSBP6 14
PSBP6C 14
PSBS12 14
PSBS12C 14
PSBS12S 14
PSBS6 14
PSBS6C 14
PSBS6S 14
PSC00FCR 17
PSC0ADCR 17
PSC0CDCR 17
PSL1B 16
PSL1BB 16
PSL1P 16
PSL1PB 16
PSL1R 16
PSL1R5 16
PSL1R5B 16
PSL1RB 16
PSL2 16
PSL2B 16
PSL2BB 16
PSL2BLK 16
PSL2P 16
PSL2PB 16
PSL2R 16
PSL2R5 16
PSL2R5B 16
PSL2RB 16
PSP1 15
PSP1AC 15
PSP1ALP 15
PSP1AP 15
PSP1AP1 15
PSP1LP 15
PSP1P 15
PSP1P1 15
PSR00XRR 17
PSRASXCR 17

INDEX

PSTANK 17
PT360F 13
PT360FW 13
PT360P 13
PT360PW 13
PTP1 15
PTP1LP 15
R1§§§00 27
R10HDM* 27
R10HDP* 27
R10HDV* 27
R1LPHM* 27
R1LPHP* 27
R1LPHV* 27
R1LPM* 27
R1LPMF 27
R1LPP* 27
R1LPPF 27
R1LPV* 27
R1LPVF 27
R2§§§00 27
R2LPHM* 27
R2LPHP* 27
R2LPHPG 45
R2LPHV* 27
R2LPM* 27
R2LPMA4 ..... 27, 44
R2LPP* 27
R2LPPA4 ..... 27, 44
R2LPV* 27
R316**F 4
R316**M 4
R316**V 4
R316*F 4
R316*M 4
R316*V 4
R416**F 4
R416**M 4
R416**V 4
R416*F 4
R416*M 4
R416*V 4
R4B****P 28
R4B*0*0P 28
R4BA3 28
R4BA6 28
R4BEND# 28
R4BEND* 28
R4BENDX 28
R4BFLASH 28
R4BTL6 28
RB6T*P 2
RBKT1 18
RBKT10 18
RBKT12 18
RBKT14 18
RBKT16 18
RBKT17 18
RBKT18 18
RBKT19 18
RBKT2 18
RBKT4 18
RBKT6 18
RBKT7 18
RBKTHD1 ..... 18, 19
RBKTHD2 ..... 18, 19
RBKTHD3 ..... 18, 19
RBKTHD3D 19
RBKTHD4L 18, 19
RBKTHD4R 18, 19
RBKTHD5 ..... 18, 20
RBKTHD6 ..... 18, 20
RBKTHD7 ..... 18, 20
RBKTHD8 ..... 18, 20
RBKTHD9 20
RDLPPAB 27
RDXMM90 27
REPDIRWA 46
REPDIRWD 46
REPSTTWD 46
REPTSSTR 46
RFLANG2B 17, 19
RFLANG2C 17, 19
RFLANGCD 17, 19
RFLANGEA 17
RFLANGEC 17
RGROMMET 17
RMK20S 42
RMK8H 42
RMK9S 42
RMKAJ# 42
RMKEA29 42
RMKEZ# 42
RMKEZ29 42
RMKEZ7 42
RMKLP# 43
RMKLPQDU 43
RP34 32
RP45 32
RPHOTO 4
RS*02ZCR 17, 19
RS*03ZCR 17, 19
RSG02ZCR 45
RSG03ZCR 45
RV*03ZCR 17, 19
S30HAA 46
S30HAAD 46
S30HAC 46
S30HACD 46
S30HACP 46
S30HACPD 46
S30TL 46
SA314A 23
SA314B 23
SA315P 23
SA31I01D 24
SA31I01P 24
SA340STS 24
SA340TS 24
SA350M 20, 24
SA350MB1 ..... 20, 24
SA350MH 20
SABKT1 23
SABKT21 23
SABKT24 23
SABKT9 23
SAK1 23
SAK23 23
SAK24 23
SAK25 23
SAK32 23
SAK34 23
SAK37 23
SAK38 23
SAK40 23
SAK41 23
SAK42 23
SAK43 23
SAK44 23
SAK45 23
SAK46 23
SAK47 23
SAK48 23
SAK49 23
SAK5 23
SAK50 23
SAK51 23
SAK52 23
SAK53 23
SAK54 23
SAK55 23
SAK56 23
SAK57 23
SAK58 23
SAK59 23
SAK60 23
SAK9 23
SD210R 24
SD210RX 24
SD370 24
SFION* 2
SFIOND 2
SFIONE 2
SFIONJ 2
SK01** 17
SK01JJ 17
SK01V3** 17
SK01W** 17
SK01WJJ 17
SK02** 17
SK02JJ 17
SK02V3** 17
SK02W** 17
SK02WJJ 17
SLENKT1 45
SLENKT2 45
SLENKT3 45
SLENLRK1 45
SLENLRK2 45
SLENLRK3 45
SLPMM** 2
SMLLAA 2
SMLLBB 2
SMLLBC 2
SMLLBR 2
SMLLCR 2
SMLLRR 2
SP123BMC 23
SPT5D 24
SPT5P 24
SPT5TEMP 24
SPTWI* 24
SSFFP16 4
SSFPOS 4
SSFPOSI6 4
SSTUBE 46
STOPSN12 46
STPEA69 42
STPEA70 42
STPKT# 42
STPKTQDU 43
STPLP# 43
SUBI3T12 38
SUBI3T6L 38
SUBI3T6S 38
T0*00M*R 4
T0CACCCR 4
TA125NF1 25
TA125NF2 25
TA165NF1 25
TA165NF2 25
TA166AL5 25
TA20TL12 46
TAC815 25
TAC830 25
TAC850 25
TACF85** 25
TACF85 25
TACTL5 25
TACTL6 25
TAD6 ..... 1, 24
TAD8** 1, 24
TAD8 ..... 1, 24
TADCTL1 ..... 2, 25
TADF6 25
TADF8 25
TADP6 ..... 1, 24
TADP8** 1, 24
TADP8 ..... 1, 24
TADP8FT 24
TADSW1 ..... 2, 25
TADSW2 ..... 2, 25
TAL65 24
TAL85 24
TAM63 24
TAM65 25
TAM83** 24
TAM83 24
TAM85** 25
TAM85 25
TANBKT1 25
TANF65 24
TANF85** 25
TANF85 25
TAZ66 24
TAZ86** 24
TAZ86 24
TCRB34 26
TCRB35 26
TCRB37 26
TCRB38 26
TCRB39 26
TCRB42 26
TCRB44 26
TCRB45 26
TCRB45A 26
TCRB46 26
TCRB47 26
TCRHD1 25
TCRHD2 25
TCRHD3 25
TCRHD4 25
TCRHD5 26
TCRHD6 26
TCRHS1 25
TCRHS2 25
TCRHS3 25
TCRHS4 25
TCRHS5 25
TCRHS6 25
TCRHT1 26
TCRHT2 26
TCRHT3 26
TCRHT4 26
TCRHT5 26
TCRHT6 26
TCRL** 26
TCRL* 25
TCRLBKT 26
TCRLRBC 26
TDP§§§00 25
TFLANGEB 5
TFLANGEC 5
TGROM2 5
TIONBKT1 10
TIONBKT2 10
TIONBKT3 10
TIONBKT4 10
TIONFC 10
TLI# 10
TLI#X 10
TLI* 10
TLI*X 10
TLI2# 10
TLI2#X 10
TURB6DUP 46
TURBO5 46
TURBO64 46
TURBOASY 46
UFM8 ..... 4, 19
UHF2150A 4
ULF44 4
UNI 45
V23*TPB 18
V23*TPBX 18
V23*TPC 18
V23*TPCX 18
V23P20B 18
V23P20C 18
V23PEDB 18
V23PEDC 18
VHB609# 19
VHB609* 19
VMCC11** 13
VMCT15** 13
VMDC11** 13
VMFT11** 13
VMFX11** 13
VTX3609# 19
VTX3609* 19
VTX609# 19
VTX609* 19
VTX609*4 44
VTX609G 45
VTXD609# 19
VTXD609* 19
VTXFB 19
VTXFC 19
VXCC11** 13
VXCT15** 13
VXDC11** 13
VXFT11** 13
VXFX11** 13
W20SS 24
W20SSRK 24
WBUA107 24
WBUA112 24
WBUA112C 24
WBUA97 24
WCC9 21
WCC92 21
WCC92SUB 33, 34, 35, 37, 38
WCC9SM 21
WCC9SUB 39
WION# 9
WION* 9
WIONSC*4 43
WIONSM# 10
WIONSM* 9
WIONSM*4 43
WMM6K 2
WPA1 ..... 20, 22
WPA112 ..... 20, 22
WPA2 22
WPA3BM 23
WPKM1 22
WPLOW1A 19
WPLOW2A 19
WPLOW3AA 19

WPLOWZ1A..... 19
WPLOWZ2A..... 19
WPLOWZ3A..... 19
WPLWZ3A4..... 44
WS321 ..... 20, 23
WS321B14 20
WSMIC321 ..... 20, 23
WSSC30 23
WSSC30HK..... 23
WSSMSW3 ..... 20, 23
WSSPA30 23
WXON# 9
WXON* 9
WXONSM# 10
WXONSM* 10
XI2# 9
XI2SM# 9
XI3JA 9
XI3JC 9
XI3KC 9
XI3MC 9
XI3SMJA..... 9
XI3SMJC..... 9
XI3SMKC 9
XI3SMMC 9
XK01** 17
XK01JJ 17
XK01V3**.....17
XK01W**.....17
XK01WJJ.....17
XK02** 17
XK02JJ 17
XK02V3**.....17
XK02W**.....17
XK02WJJ.....17
XON# 9
XON* 9
XONSM# 9
XONSM*..... 9
XONSV1* 10
XONSV3* 10
XONV1* 10
XONV3*..... 10
XTX609# 19
XTX609*..... 19
XTXD609#..... 19
XTXD609* 19

CARBIDE™
CENCOM
Engineered to maintain situational awareness of the officer, Whelen's CenCom Carbide™ houses numerous innovative technologies that deliver highly effective visual and auditory warning.
WHELEN
MANUFACTURED IN AMERICA
www.whelen.com
WhelenENG
WC EXTERNAL AMPLIFIER

Authorized Managing Sales Representatives

CONNECTICUT, MAINE, MASSACHUSETTS NEW HAMPSHIRE, RHODE ISLAND, VERMONT
Patriot Fleet Group, LLC
P.O. Box 886
Rocky Hill, Connecticut 06067
860-757-3922 • Fax: 860-785-8697
e-mail: amsr1@whelen.com

DELAWARE, MARYLAND, PENNSYLVANIA, VIRGINIA, WASHINGTON D.C.
Mobile Fleet
P.O. Box 591
Reedsville, Pennsylvania 17084
(866) 674-1110 • Fax: (443) 593-0590
e-mail: amsr2@whelen.com

FLORIDA
Morganelli & Associates
1401 Saratoga Street
Deland, Florida 32724
(386) 738-3669 • Fax: (386) 738-5331
e-mail: amsr3@whelen.com

ALABAMA, GEORGIA, MISSISSIPPI, NORTH CAROLINA, SOUTH CAROLINA, TENNESSEE (Except Memphis)
Thomas J. Madden & Associates, Inc.
935 Hwy 124, Bldg 400, Suite 401
Braselton, Georgia 30517
(678) 963-2060 • Fax: (678) 963-2061
e-mail: amsr4@whelen.com

HAWAII, GUAM & SAIPAN
Pacific Sales Representatives, Inc.
P.O. Box 240256
Honolulu, Hawaii 96824-0256
(808) 373-4666 • Fax: (808) 373-3045
e-mail: amsr6@whelen.com

KENTUCKY, OHIO, WEST VIRGINIA
Holstein & Associates, LLC
9031 Heritage Drive
Plain City, Ohio 43064
(614) 873-2121 • Fax: (614) 873-3095
e-mail: amsr7@whelen.com

ARKANSAS, LOUISIANA, TENNESSEE (Memphis only), TEXAS
John Wright & Associates
1111 W Abram Street
Arlington, Texas 76013
(817) 459-2001 • Fax: (817) 459-2515
e-mail: amsr8@whelen.com

ALASKA, IDAHO, MONTANA, OREGON, WASHINGTON
Kent D. Bruce Company, LLC
P.O. Box 225
Black Diamond, Washington 98010
(360) 886-9410 • Fax: (360) 886-9411
e-mail: amsr10@whelen.com

CALIFORNIA, NEVADA (Northwest and South)
WATTCO
2230 Cordelia Road
Fairfield, California 94534
(707) 435-9233 • Fax: (707) 435-1941
e-mail: amsr12@whelen.com

IOWA, MINNESOTA, NORTH DAKOTA, SOUTH DAKOTA
W. Reeves & Associates LLC
P.O. Box 477
Norwalk, Iowa 50211
(515) 981-5967 • Fax: 866-336-3503
e-mail: amsr13@whelen.com

KANSAS, MISSOURI, NEBRASKA, OKLAHOMA
Busch & Associates, LLC
12705 South Rene Street
Olathe, Kansas 66062
(913) 390-1777 • Fax: (913) 390-7889
e-mail: amsr14@whelen.com

COLORADO, NEVADA (Northeast) UTAH, WYOMING
Rep Services, LLC
33990 County Road 27
Kiowa, Colorado 80117
(303) 840-7451 • Fax: (303) 805-0133
e-mail: amsr19@whelen.com

NEW JERSEY, NEW YORK
Mobile Fleet
10 Commerce Drive
Hauppauge, New York 11788
(631) 206-2920 • Fax: (631) 206-2923
e-mail: amsr20@whelen.com

INDIANA, MICHIGAN
C. S. Trojan & Associates, Inc.
1375 Rickett Road
Brighton, Michigan 48116
(810) 227-7775 • Fax: (810) 227-9195
e-mail: amsr22@whelen.com

ILLINOIS, WISCONSIN
Coatar & Associates, Inc.
19027 Jodi Road, Suite F
Mokena, Illinois 60448
(708) 478-5220 • Fax: (708) 478-5221
e-mail: amsr23@whelen.com

ARIZONA, NEW MEXICO
Charlotte Young & Associates, Inc.
500 N Estrella Pkwy #B2-423
Goodyear, Arizona 85338-4168
(626) 914-5115
e-mail: amsr25@whelen.com

WHELEN FACTORY INQUIRY

Automotive Sales
e-mail: autosale@whelen.com
Automotive OEM Sales
e-mail: autooem@whelen.com
Automotive Government Sales
e-mail: autousos@whelen.com
Automotive Catalog
e-mail: catalog@whelen.com
Customer Service
e-mail: custserv@whelen.com

CANADIAN INQUIRY

EASTERN: NEWFOUNDLAND, NEW BRUNSWICK, NOVA SCOTIA, PRINCE EDWARD ISLAND
Leslie and Associates
32 Steeles Avenue East
Milton, Ontario, Canada L9T 5A1
(905) 878-8457 • Fax: (905) 878-0877
e-mail: amsr15@whelen.com

CENTRAL: MANITOBA, ONTARIO, QUEBEC, NUNAVUT
Leslie and Associates
32 Steeles Avenue East
Milton, Ontario, Canada L9T 5A1
(905) 878-8457 • Fax: (905) 878-0877
e-mail: amsr15@whelen.com

WESTERN: ALBERTA, BRITISH COLUMBIA, SASKATCHEWAN, YUKON AND NORTHWEST TERRITORIES
TL Smid Associates
3057 Similkameen Place
Kamloops, British Columbia, Canada V2E 2T6
(250) 572-1507
e-mail: amsr21@whelen.com

WHELEN/CANADA FACTORY INQUIRY

Canadian Automotive Sales
e-mail: canadiansales@whelen.com
Automotive Catalog
e-mail: catalog@whelen.com
Customer Service
e-mail: custserv@whelen.com

MEXICO, CARIBBEAN, CENTRAL & SOUTH AMERICA INQUIRES

T. Murtaugh and Associates
Mercurio 65
Col. San Bernardo
Guaymas, Sonora, Mexico 85460
(480) 235-7392
e-mail: amsr49@whelen.com

MIDDLE EAST INQUIRY

ZABAI LLC
Ivan R. Lopez Zavala
20 Bokum Road
Chester, Connecticut 06412
(860) 819-6986
e-mail: amsr26@whelen.com

INTERNATIONAL INQUIRY

Contact Factory
e-mail: autousos@whelen.com

WHELEN®
ENGINEERING COMPANY, INC.

51 Winthrop Road, Chester, Connecticut 06412-0684 • (860) 526-9504 • www.whelen.com

© 2016 Whelen.
Printed in U.S.A. 082416