STATE OF MICHIGAN
CENTRAL PROCUREMENT SERVICES
Department of Technology, Management, and Budget
320 S. WALNUT ST., LANSING, MICHIGAN 48933
P.O. BOX 30026 LANSING, MICHIGAN 48909

CONTRACT CHANGE NOTICE

Change Notice Number **3**

to

Contract Number **071B7700094**

CONTRACTOR	
	AGCO CORPORATION
	4205 River Green Parkway
	Duluth, GA 30096
	Brian Celli
	678-356-4323
	brian.celli@agcocorp.com
	CV0136275

STATE			
	Program Manager	Scott Poyer	SW
		517-284-6448	
		poyers@Michigan.gov	
	Contract Administrator	Yvon Dufour	DTMB
		(517) 249-0455	
		dufoury@michigan.gov	

CONTRACT SUMMARY			
AGRICULTURAL, GROUNDS & MAINTENANCE EQUIPMENT PURC			
INITIAL EFFECTIVE DATE	**INITIAL EXPIRATION DATE**	**INITIAL AVAILABLE OPTIONS**	**EXPIRATION DATE BEFORE**
January 13, 2017	January 12, 2021	2 - 1 Year	January 12, 2023
PAYMENT TERMS		**DELIVERY TIMEFRAME**	
ALTERNATE PAYMENT OPTIONS			**EXTENDED PURCHASING**
☐ P-Card	☐ PRC	☐ Other	☒ Yes ☐ No
MINIMUM DELIVERY REQUIREMENTS			

DESCRIPTION OF CHANGE NOTICE				
OPTION	**LENGTH OF OPTION**	**EXTENSION**	**LENGTH OF EXTENSION**	**REVISED EXP. DATE**
☐		☒	One year	January 12, 2024
CURRENT VALUE	**VALUE OF CHANGE NOTICE**		**ESTIMATED AGGREGATE CONTRACT VALUE**	
$300,000.00	$0.00		$300,000.00	

DESCRIPTION

Effective 10/11/2022, this contract is extended 12 months. The revised contract expiration date is 1/12/2024. All other terms, conditions, specifications, and pricing remain the same. Per DTMB request, DTMB Procurement approval, and State Administrative Board approval on 10/11/2022.

STATE OF MICHIGAN
CENTRAL PROCUREMENT SERVICES
Department of Technology, Management, and Budget
525 W. ALLEGAN ST., LANSING, MICHIGAN 48913
P.O. BOX 30026 LANSING, MICHIGAN 48909

CONTRACT CHANGE NOTICE

Change Notice Number **2**

to

Contract Number **071B7700094**

CONTRACTOR	
	AGCO CORPORATION
	4205 River Green Parkway
	Duluth, GA 30096
	Korey Maryland
	770-232-8244
	korey.maryland@agcocorp.com
	CV0136275

STATE			
	Program Manager	Scott Poyer	SW
		517-284-6448	
		poyers@Michigan.gov	
	Contract Administrator	Yvon Dufour	DTMB
		(517) 249-0455	
		dufoury@michigan.gov	

CONTRACT SUMMARY			
AGRICULTURAL, GROUNDS & MAINTENANCE EQUIPMENT PURC			
INITIAL EFFECTIVE DATE	**INITIAL EXPIRATION DATE**	**INITIAL AVAILABLE OPTIONS**	**EXPIRATION DATE BEFORE**
January 13, 2017	January 12, 2021	2 - 1 Year	January 12, 2023
PAYMENT TERMS		**DELIVERY TIMEFRAME**	
ALTERNATE PAYMENT OPTIONS			**EXTENDED PURCHASING**
☐ P-Card	☐ PRC	☐ Other	☒ Yes ☐ No
MINIMUM DELIVERY REQUIREMENTS			

DESCRIPTION OF CHANGE NOTICE				
OPTION	**LENGTH OF OPTION**	**EXTENSION**	**LENGTH OF EXTENSION**	**REVISED EXP. DATE**
☐		☐		January 12, 2023
CURRENT VALUE	**VALUE OF CHANGE NOTICE**		**ESTIMATED AGGREGATE CONTRACT VALUE**	
$300,000.00	$0.00		$300,000.00	

DESCRIPTION

Effective 6/7/2021 pricing on this contract is hereby updated, per revised Schedule F1 & F2 (attached). All other terms, conditions, specifications and pricing remain the same. Per contractor request, and DTMB Procurement approval.

CONTRACT # 071B7700094 - **AWARDED** SPECIFICATIONS FOR PURCHASE					DELIVERY
Spec #	EQUIPMENT MAKE & MODEL:	EQUIPMENT CATEGORY	Quoted Price	Hourly rate for training (per Schedule A, Statement of Work, section A.,3.3)	Per mile from Contractor's nearest dealer location (Minimum Charge of $150)
23	C05-0901.16 Roadside Tractor - MF4710	Tractor	$41,346.23	$85.00	$2.00 per loaded mile
NON-AWARDED SPECIFICATIONS FOR PURCHASE					
23	C05-0901.16 Roadside Tractor - MF5711	Tractor	$44,285.45	$85.00	$2.00 per loaded mile
25	C05-1001-16 Tractor Lawn Mower 2 Wheel steer - GC1705	Tractor/Mower	$9,102.52	$85.00	$2.00 per loaded mile

Catalog Pricing For PURCHASE						DELIVERY
Item #	EQUIPMENT MAKE & MODEL:	EQUIPMENT CATEGORY	List Pricing	% Discount Off List	Set-Up Fees	Per mile from Contractor's nearest dealer location (Minimum Charge of $150)
1	Massey Ferguson Compact Tractors - MFGC1700	Tractor	See Schedule F2 - Pricing Sheets or go to https://www.masseyferguson.com/en_us/financing/build-my-massey-ferguson.html for Build and pricing	24%	Included	$2.00 per loaded mile
2	Massey Ferguson Compact Tractors - MF1500	Tractor		22%	Included	$2.00 per loaded mile
3	Massey Ferguson Compact Tractors - MF1700E	Tractor		22%	Included	$2.00 per loaded mile
4	Massey Ferguson Compact Tractors - MF1700	Tractor		22%	Included	$2.00 per loaded mile
5	Massey Ferguson Utilty Tractors - MF2600	Tractor		21%	Included	$2.00 per loaded mile
6	Massey Ferguson Utilty Tractors - MF2700E	Tractor		21%	Included	$2.00 per loaded mile
7	Massey Ferguson Utilty Tractors - MF2600H	Tractor		21%	Included	$2.00 per loaded mile
8	Massey Ferguson Utilty Tractors - MF4600/MF4600M	Tractor		21%	Included	$2.00 per loaded mile
9	Massey Ferguson Utilty Tractors - MF4700	Tractor		21%	Included	$2.00 per loaded mile
10	Massey Ferguson Mid-Range Tractors - MF5609/MF5610/MF5611	Tractor		27%	Included	$2.00 per loaded mile
11	Massey Ferguson Mid-Range Tractors - MF5710/MF5711 (Global Series)	Tractor		27%	Included	$2.00 per loaded mile
12	Massey Ferguson Mid-Range Tractors - MF5612/MF5613/MF5700SL	Tractor		28%	Included	$2.00 per loaded mile
13	Massey Ferguson Mid-Range Tractors - MF6600	Tractor		28%	Included	$2.00 per loaded mile
14	Massey Ferguson Mid-Range Tractors - MF6700 (Global Series)	Tractor		28%	Included	$2.00 per loaded mile
15	Massey Ferguson Mid-Range Tractors - MF6700S	Tractor		28%	Included	$2.00 per loaded mile
16	Massey Ferguson High Horsepower Tractors - MF7600	Tractor		30%	Included	$2.00 per loaded mile
17	Massey Ferguson High Horsepower Tractors - MF7700	Tractor		30%	Included	$2.00 per loaded mile
18	Massey Ferguson High Horsepower Tractors - MF8600	Tractor		30%	Included	$2.00 per loaded mile
19	Massey Ferguson High Horsepower Tractors - MF8700	Tractor		30%	Included	$2.00 per loaded mile
20	All Loaders, Mowers, Blades, Snow Blowers, & Backhoes	Tractor Attachments		22%	*Included	
21	Massey Ferguson Combines	Combines		27%	*Included	
22	Massey Ferguson Hay Equipment	Hay Equipment		27%	*Included	
23	Massey Ferguson Tillage	Tillage		27%	*Included	
24	Massey Ferguson Planters	Planter		27%	*Included	

**1% Additional Discount on 3-4 units

**2% Additional Discount on 5+ units

Notes:

1. *Set-up fees are included when attachements and/or options are included on the same Purchase Order.

2. **A Mulitple unit discount is available to all Government agencies in the State of Michigan, purchasing 3 or more like products on the same purchase order. Like products are those listed in the same section of the price book, i.e. Compacts, Utility, Mid-Range & High Horespower. Attachements (loaders, mowers, backhoes, blades & snow blowers) will get the same discount as the tractor they are intended to go on. Attachements do not add to the multiple count but are eligible for the discount.

MASSEY FERGUSON®

TRACTORS

MASSEY FERGUSON®

TRACTOR INDEX

COMPACT TRACTORS

COMPACT . . . . **Compact - 1**
GC1723E . . . . Compact - 2
GC1723E TLB . . . . Compact - 4
GC1725M . . . . Compact - 6
GC1725M TLB . . . . Compact - 8
GC1705 (Subject to Availability) . . . . Compact - 11
GC1710 (Subject to Availability) . . . . Compact - 13
GC1715 (Subject to Availability) . . . . Compact - 15
GC1720 (Subject to Availability) . . . . Compact - 17

1526H . . . . Compact - 19
1825E . . . . Compact - 21
1835E . . . . Compact - 24
1840E . . . . Compact - 27
1735E (Subject to Availability) . . . . Compact - 31
1740E (Subject to Availability) . . . . Compact - 34
1734E (Subject to Availability) . . . . Compact - 38
1739E (Subject to Availability) . . . . Compact - 41
1835M . . . . Compact - 45
1840M . . . . Compact - 49
2850E . . . . Compact - 53
2860E . . . . Compact - 57
2850M . . . . Compact - 61
2855M . . . . Compact - 65
2860M . . . . Compact - 69
1735M (Subject to Availability) . . . . Compact - 73
1750M (Subject to Availability) . . . . Compact - 77
1755M (Subject to Availability) . . . . Compact - 81
Field Installed Accessories . . . . Compact - 85

UTILITY TRACTORS

2700E SERIES UTILITY . . . . **MF2700E - 1**
2750E (Subject to Availability) . . . . MF2700E - 2
2760E (Subject to Availability) . . . . MF2700E - 5
Field Installed Accessories . . . . MF2700E - 8

2600H SERIES UTILITY . . . . **MF2600H - 1**
2604H . . . . MF2600H - 2
2605H . . . . MF2600H - 5
2606H . . . . MF2600H - 9
2607H . . . . MF2600H - 13
Field Installed Accessories . . . . MF2600H - 17

TRACTOR INDEX

MASSEY FERGUSON®

UTILITY TRACTORS Continued

4600M SERIES UTILITY . . . . . **MF4600M - 1**
4607M . . . . . MF4600M - 2
Field Installed Accessories . . . . . MF4600M - 5

4700 SERIES UTILITY . . . . . **MF4700 - 1**
4707 . . . . . MF4700 - 2
4708 . . . . . MF4700 - 2
4709 . . . . . MF4700 - 2
4710 . . . . . MF4700 - 2
Field Installed Accessories . . . . . MF4700 - 7

SPECIALTY

4600M SERIES UTILITY . . . . . **MF4600Sp - 1**
4610M High Clearance . . . . . MF4600Sp - 2
Field Installed Accessories . . . . . MF4600Sp - 4

MID RANGE TRACTORS

5700 GLOBAL SERIES - MID RANGE . . . . . **MF5700 - 1**
5710, 5711 Platform . . . . . MF5700 - 2
5710, 5711 Cab . . . . . MF5700 - 8

5700D DYNA-4 GLOBAL SERIES - MID RANGE . . . . . **MF5700 - 1**
5710D, 5711D Cab . . . . . MF5700D - 4

5700S SERIES - MID RANGE . . . . . **MF5700 - 1**
5711S, 5712S, 5713S Classic . . . . . MF5700S - 2
5711S, 5712S, 5713S Deluxe . . . . . MF5700S - 12

6700 GLOBAL SERIES - MID RANGE . . . . . **MF6700S - 1**
6712, 6713 Platform . . . . . MF6700S - 2
6712, 6713 Cab . . . . . MF6700S - 6

6700S SERIES - MID RANGE . . . . . **MF6700S - 1**
6714S, 6715S, 6716S, 6718S Classic . . . . . MF6700S - 3
6714S, 6715S, 6716S, 6718S Deluxe . . . . . MF6700S - 16

MASSEY FERGUSON®

TRACTOR INDEX

HIGH HORSEPOWER TRACTORS

7700S SERIES - HIGH HORSEPOWER . . . . . MF7700S - 1
7714S, 7715S, 7716S, 7718S Series . . . . . MF7700S - 3
Classic Editions. . . . . MF7700S - 4
Deluxe Editions . . . . . MF7700S - 18
Premium Editions . . . . . MF7700S - 30

7719S, 7720S, 7722S, 7724S, 7726S Series . . . . . MF7700S - 42
Classic Editions. . . . . MF7700S - 43
Deluxe Editions . . . . . MF7700S - 55
Premium Editions . . . . . MF7700S - 71

8700S SERIES - HIGH HORSEPOWER . . . . . MF8700S - 1
8727S, 8730S, 8732S, 8735S, 8737S MF8700S- 3
Wheel Tread Settings . . . . . MF8700S - 20

MASSEY FERGUSON®

COMPACT TRACTORS

GC1723E GARDEN COMPACT

MASSEY FERGUSON®

(F.O.B. Port of Entry)

TRACTOR FEATURES

POWER TRAIN

- Engine:
  22.5 Gross HP 3 Cyl Diesel
  1.12 L Displacement
  21.6 Net HP @ 2600 RPM
  18.3 PTO HP @ 2600 RPM
- Dry Type Single Air Cleaner
- Transmission: 2 Range Hydrostatic with Cruise Control
- Wet Disk Brakes
- Parking Brake
- Differential Lock
- PTO: 540 RPM Independent PTO
  2000 RPM Mid Independent PTO

HYDRAULIC SYSTEM

- 3-Point Hitch, Cat I With Directional Control, Auto Return Lever System
- Engine Driven Gear Pump
- 3-Point Hitch 4.3 GPM (16.5 LPM)
- Power Steering 2.0 GPM (7.5 LPM)
- Total Combined Flow 6.3 GPM (24 LPM)

INSTRUMENTS

- Tachometer / Hourmeter
- Engine Coolant Gauge Fuel Gauge
- Warning Lights: Electrical Charging, Oil Pressure and Water Temperature

OTHER STANDARD FEATURES

- Hydrostatic Power Steering
- Tilt Steering Column
- Hand Accelerator
- Forward and Reverse Foot Pedal
- Rubber Floor Mat
- Covered Storage Compartment
- Electric Fuel Shut-Off
- 12 Volt Electrical System
- Battery: 390 Cold Cranking Amps
- Fully Adjustable Seat With Retractable Seatbelt
- 2 Post Fixed Rops
- Tilt-Up Hood
- Turn Signals, Flashers, Tail Lights
- Factory Joystick Optional
- Hydraulic Manifold with Pressure and Return Lines on Model with Factory Joystick

- ***Note: 3-Point Mounted Backhoe Installation Voids Warranty. Use the Required Subframe Mounting Kit.***

IMPLEMENT FEATURES

MF FL1805 LOADER

- One Piece Main Frame with Tapered Arms and Single Cross Member
- Quick Attach Loader Frame Mount with Pin Lock
- Built-in Parking Stands
- (2) 1.57 inch Double Acting Lift Cylinders
- (2) 1.57 inch Double Acting Bucket Cylinders
- Simultaneous Operation of Lift/Lower and Curl/Dump Functions
- Hydraulic Lines Routed Inside Main Frame for Protection and Visibility
- Galvanized Pins with Recessed Grease Points
- 48-inch Standard Duty Skid Steer Bucket
- Grille Guard Standard
- Maximum Lift Height at Pivot Pins: 74 Inches
- Lift Capacity to Full Height at Pivot Pins: 922 lbs
- Breakout Force at Pivot Pins: 1,392 lbs
- Rated Hydraulic Pressure: 1,920 PSI
- Fits all GC1700 Series Tractors

AVAILABLE ATTACHMENTS (REFER TO IMPLEMENT SECTIONS)

- MF 2315, 2320 and 2326 Mid Mounted Mowers
- MF 2360 Front Mounted Snow Blower
- MF 2330 Front Mounted Rotary Broom
- MF 2335 Front Mounted Blade
- MF 2340 Front Mounted Heavy Duty Blade

GC1723E GARDEN COMPACT

MASSEY FERGUSON®

Order Code	Catalog Number	Description	Factory Code	Approx. Weight	List Price

ORDER TRACTOR ONLY OR
TRACTOR AND LOADER BELOW
THEN ORDER ONE CODE FROM GROUP 03 THROUGH 05 AS REQUIRED

BASE MACHINE — GROUP 01

MFGC1723E		**MFGC1723E Hydrostatic Base Tractor**			
F-RE3	72530553	4wd Platform **(Subject to Availability)**	35C8169		9,611.00
F-J-RE3	72530554	4wd Platform with Factory Joystick	40C8843		10,404.00

LOADER - For 4WD with Joystick Only — GROUP 02

	72533068	MFFL1805 Loader Package, Skid Steer Type Includes: Mount, Quick Attach, Bucket, Hoses and Grille Guard	10C2844		3,346.00

Note: For Additional Loader Options, Refer to Implements Price List Revision

*** ALL Tractors will be charged $135 for Assembly**

LOADER MANUALS - Required with Loader Package — GROUP 03

	72530696	MFFL1805 English Loader Operator Manual			No Charge
	72530687	MFFL1805 French Loader Operator Manual			No Charge

TIRES & WHEELS - Choose only one set of Tires & Wheels — GROUP 04

NOTE: See Dealer / Field Installed Accessories for list of Tires & Wheels available as Loose Accessory orders. Tire and wheel options ordered with the tractor and not subject to availability can be returned via RGA. Contact Dealer Central with questions.

For Tractor or Tractor-Loader:

	72530702M	Front: 18x8.50-10 R-4 Industrial Rear: 26x12.00-12 R-4 Industrial	20C639		752.00
	72530701M	Front: 18x8.50-10 Turf Rear: 26x12.00-12 Turf	55C529	140	623.00
	72530700M	Front: 18x8.50-10 AG Rear: 26x12.00-12 AG	60C591	148	696.00

TRACTOR OPERATOR'S MANUAL — GROUP 05

	72530559M	English Operator's and Safety Manual			No Charge
	72530560M	French Operator's and Safety Manual			No Charge

GC1723E TLB GARDEN COMPACT

MASSEY FERGUSON®

(F.O.B. Port of Entry)

TRACTOR FEATURES

POWER TRAIN

- Engine:
  22.5 Gross HP 3 Cyl Diesel
  1.12 L Displacement
  21.6 Net HP @ 2600 RPM
  18.3 PTO HP @ 2600 RPM
- Dry Type Single Air Cleaner
- Transmission: 2 Range Hydrostatic with Cruise Control
- Wet Disk Brakes
- Parking Brake
- Differential Lock
- PTO: 540 RPM Independent PTO
  2000 RPM Mid Independent PTO

HYDRAULIC SYSTEM

- 3-Point Hitch, Cat I With Directional Control, Auto Return Lever System
- Engine Driven Gear Pump
- 3-Point Hitch 4.3 GPM (16.5 LPM)
- Power Steering 2.0 GPM (7.5 LPM)
- Total Combined Flow 6.3 GPM (24 LPM)

INSTRUMENTS

- Tachometer / Hourmeter
- Engine Coolant Gauge Fuel Gauge
- Warning Lights: Electrical Charging, Oil Pressure and Water Temperature

OTHER STANDARD FEATURES

- Hydrostatic Power Steering
- Tilt Steering Column
- Hand Accelerator
- Forward and Reverse Foot Pedal
- Rubber Floor Mat
- Covered Storage Compartment
- Electric Fuel Shut-Off
- 12 Volt Electrical System
- Battery: 390 Cold Cranking Amps
- Fully Adjustable Seat With Retractable Seatbelt
- 2 Post Folding Rops
- Tilt-Up Hood
- Turn Signals, Flashers, Tail Lights
- Factory Joystick
- Hydraulic Manifold with Pressure and Return Lines on Model with Factory Joystick

- ***Note: 3-Point Mounted Backhoe Installation Voids Warranty. Use the Required Subframe Mounting Kit.***

IMPLEMENT FEATURES

MF FL1805 LOADER

- One Piece Main Frame with Tapered Arms and Single Cross Member
- Quick Attach Loader Frame Mount with Pin Lock
- Built-in Parking Stands
- (2) 1.57 inch Double Acting Lift Cylinders
- (2) 1.57 inch Double Acting Bucket Cylinders
- Simultaneous Operation of Lift/Lower and Curl/Dump Functions
- Hydraulic Lines Routed Inside Main Frame for Protection and Visibility
- Galvanized Pins with Recessed Grease Points
- 48-inch Standard Duty Skid Steer Bucket
- Grille Guard Standard
- Maximum Lift Height at Pivot Pins: 74 Inches
- Lift Capacity to Full Height at Pivot Pins: 922 lbs
- Breakout Force at Pivot Pins: 1,392 lbs
- Rated Hydraulic Pressure: 1,920 PSI
- Fits all GC1700 Series Tractors

MF BH2720 BACKHOE

- Digging Depth: 76 inches (1.9 m)
- Max Reach: 107 inches (2.7 m)
- Transport Height: 71 inches (1.8 m)
- Stabilizer Spread - Transport: 51 inches (1.3 m)
- Stabilizer Spread - Operating: 81 inches (2.1 m)
- Loading Height: 66 inches (1.7 m)
- Angle of Departure: 22 Degrees
- Swing Arc: 150 Degrees
- Bucket Rotation: 177 Degrees
- Shipping Weight: 573 lbs (260 kg)
- Digging Force Using Bucket Cylinder: 2184 lbs (911 kg)
- Digging Force Using Dipper Cylinder: 1541 lbs (699 kg)
- Single Boom Swing Cylinder

NOTES: *Dimensions may change due to tire size. Backhoe must be detached before installing the mid mount mower.*

AVAILABLE ATTACHMENTS (REFER TO IMPLEMENT SECTIONS)

- MF 2315, 2320, 2326 Mid Mounted Mowers (*Backhoe must be removed to operate mid mount mower.)*
- MF 2360 Front Mounted Snow Blower
- MF 2330 Front Mounted Rotary Broom
- MF 2335 Front Mounted Blade
- MF 2340 Front Mounted Heavy Duty Blade

GC1723E TLB GARDEN COMPACT

MASSEY FERGUSON®

Order Code	Catalog Number	Description	Factory Code	Approx. Weight	List Price

ORDER TRACTOR, LOADER AND BACKHOE BELOW
THEN ORDER ONE CODE FROM GROUP 02 THROUGH 04 AS REQUIRED

BASE MACHINE — GROUP 01

MFGC1723EB — **MFGC1723EB Hydrostatic Base Tractor Loader Backhoe**

F-J-LE3	72530555	4WD Platform Tractor with Joystick . . . . . Includes FL1805 Loader with Skid Steer Bucket and BH2720 Backhoe with 12-inch Bucket, Completely Assembled	25C16426		19,325.00

Note: For Additional Loader Options, Refer to Implements Price List Revision

*** ALL Tractors will be charged $135 for Assembly**

LOADER MANUALS - Required with Loader Package — GROUP 02

72530696	MFFL1805 English Loader Operator Manual	No Charge
72530687	MFFL1805 French Loader Operator Manual.	No Charge

TIRES & WHEELS — GROUP 03

NOTE: See Dealer / Field Installed Accessories for list of Tires & Wheels available as Loose Accessory orders. Tire and wheel options ordered with the tractor and not subject to availability can be returned via RGA. Contact Dealer Central with questions.

72530702M	Front: 18x8.50-10 R-4 Industrial . . . . . Rear: 26x12.00-12 R-4 Industrial	20C639		752.00
72530701M	Front: 18x8.50-10 Turf . . . . . Rear: 26x12.00-12 Turf	55C529	140	623.00
72530700M	Front: 18x8.50-10 AG. . . . . Rear: 26x12.00-12 AG	60C591	148	696.00

TRACTOR OPERATOR'S MANUAL — GROUP 04

72530559M	English Operator's and Safety Manual	No Charge
72530560M	French Operator's and Safety Manual	No Charge

GC1725M GARDEN COMPACT

MASSEY FERGUSON®

(F.O.B. Port of Entry)

TRACTOR FEATURES

POWER TRAIN

- Engine:
  24.5 Gross HP 3 Cyl Diesel
  1.12 L Displacement
  23.6 Net HP @ 3000 RPM
  18.5 PTO HP @ 3000 RPM
- Dry Type Single Air Cleaner
- Transmission: 2 Range Hydrostatic with Cruise Control
- Wet Disk Brakes
- Parking Brake
- Differential Lock
- PTO: 540 RPM Independent PTO
  2000 RPM Mid Independent PTO

HYDRAULIC SYSTEM

- 3-Point Hitch, Cat I With Directional Control, Auto Return Lever System
- Engine Driven Gear Pump
- 3-Point Hitch 4.9 GPM (18.8 LPM)
- Power Steering 2.0 GPM (7.5 LPM)
- Total Combined Flow 6.9 GPM (26.3 LPM)

INSTRUMENTS

- Tachometer / Hourmeter
- Engine Coolant Gauge Fuel Gauge
- Warning Lights: Electrical Charging and Oil Pressure and Water Temperature

OTHER STANDARD FEATURES

- Hydrostatic Power Steering
- Tilt Steering Column
- Hand Accelerator
- Forward And Reverse Foot Pedal
- Rubber Floor Mat
- Covered Storage Compartment with 12V Socket
- Electric Fuel Shut-Off
- 12 Volt Electrical System
- Battery: 390 Cold Cranking Amps
- Fully Adjustable Swivel Seat with Armrests and Retractable Seatbelt
- 2 Post Fixed ROPS
- Tilt-Up Hood
- Turn Signals, Flashers, Tail Lights
- Factory Joystick
- Hydraulic Manifold with Pressure and Return Lines on Model with Factory Joystick

- ***Note: 3-Point Mounted Backhoe Installation Voids Warranty. Use the Required Subframe Mounting Kit.***

IMPLEMENT FEATURES

MF FL1805 LOADER

- One Piece Main Frame with Tapered Arms and Single Cross Member
- Quick Attach Loader Frame Mount with Pin Lock
- Built-in Parking Stands
- (2) 1.57 inch Double Acting Lift Cylinders
- (2) 1.57 inch Double Acting Bucket Cylinders
- Simultaneous Operation of Lift/Lower and Curl/Dump Functions
- Hydraulic Lines Routed Inside Main Frame for Protection and Visibility
- Galvanized Pins with Recessed Grease Points
- 48-inch Standard Duty Skid Steer Bucket
- Grille Guard Standard
- Maximum Lift Height at Pivot Pins: 74 Inches
- Lift Capacity to Full Height at Pivot Pins: 922 lbs
- Breakout Force at Pivot Pins: 1,392 lbs
- Rated Hydraulic Pressure: 1,920 PSI
- Fits all GC1700 Series Tractors

AVAILABLE ATTACHMENTS (REFER TO IMPLEMENT SECTIONS)

- MF 2315, 2320 and 2326 Mid Mounted Mowers
- MF 2360 Front Mounted Snow Blower
- MF 2330 Front Mounted Rotary Broom
- MF 2335 Front Mounted Blade
- MF 2340 Front Mounted Heavy Duty Blade

GC1725M GARDEN COMPACT

MASSEY FERGUSON®

Order Code	Catalog Number	Description	Factory Code	Approx. Weight	List Price

ORDER TRACTOR ONLY OR
TRACTOR AND LOADER BELOW
THEN ORDER ONE CODE FROM GROUP 03 THROUGH 04 AS REQUIRED

BASE MACHINE — GROUP 01

MFGC1725M		**MFGC1725M Hydrostatic Base Tractor**			
F-J-RE3	72530556	4wd Platform with Factory Joystick	05C10109		11,893.00

LOADER - For 4WD with Joystick Only — GROUP 02

	72533068	MFFL1805 Loader Package, Skid Steer Type Includes: Mount, Quick Attach, Bucket, Hoses and Grille Guard	10C2844		3,346.00

Note: For Additional Loader Options, Refer to Implements Price List Revision

*** ALL Tractors will be charged $135 for Assembly**

LOADER MANUALS - Required with Loader Package — GROUP 03

	72530696	MFFL1805 English Loader Operator Manual			No Charge
	72530687	MFFL1805 French Loader Operator Manual			No Charge

TIRES & WHEELS - Choose only one set of Tires & Wheels — GROUP 04

NOTE: See Dealer / Field Installed Accessories for list of Tires & Wheels available as Loose Accessory orders. Tire and wheel options ordered with the tractor and not subject to availability can be returned via RGA. Contact Dealer Central with questions.

For Tractor or Tractor-Loader:

	72530702M	Front: 18x8.50-10 R-4 Industrial Rear: 26x12.00-12 R-4 Industrial	20C639		752.00
	72530701M	Front: 18x8.50-10 Turf Rear: 26x12.00-12 Turf	55C529	140	623.00
	72530700M	Front: 18x8.50-10 AG. Rear: 26x12.00-12 AG	60C591	148	696.00

TRACTOR OPERATOR'S MANUAL — GROUP 05

	72530559M	English Operator's and Safety Manual			No Charge
	72530560M	French Operator's and Safety Manual			No Charge

GC1725M TLB GARDEN COMPACT

TRACTOR LOADER BACKHOE

MASSEY FERGUSON®

(F.O.B. Port of Entry)

TRACTOR FEATURES

POWER TRAIN

- Engine:
  24.5 Gross HP 3 Cyl Diesel
  1.12 L Displacement
  23.6 Net HP @ 3000 RPM
  18.5 PTO HP @ 3000 RPM
- Dry Type Single Air Cleaner
- Transmission: 2 Range Hydrostatic with Cruise Control
- Wet Disk Brakes
- Parking Brake
- Differential Lock
- PTO: 540 RPM Independent PTO
  2000 RPM Mid Independent PTO

HYDRAULIC SYSTEM

- 3-Point Hitch, Cat I With Directional Control, Auto Return Lever System
- Engine Driven Gear Pump
- 3-Point Hitch 4.9 GPM (18.8 LPM)
- Power Steering 2.0 GPM (7.5 LPM)
- Total Combined Flow 6.9 GPM (26.3 LPM)

INSTRUMENTS

- Tachometer / Hourmeter
- Engine Coolant Gauge Fuel Gauge
- Warning Lights: Electrical Charging and Oil Pressure and Water Temperature

OTHER STANDARD FEATURES

- Hydrostatic Power Steering
- Tilt Steering Column
- Hand Accelerator
- Side by Side Forward and Reverse Pedals
- Rubber Floor Mat
- Covered Storage Compartment with 12V Socket
- Electric Fuel Shut-Off
- 12 Volt Electrical System
- Battery: 390 Cold Cranking Amps
- Fully Adjustable Swivel Seat with Armrests and Retractable Seatbelt
- 2 Post Folding Rops
- Tilt-Up Hood
- Turn Signals, Flashers, Tail Lights
- Factory Joystick
- Hydraulic Manifold with Pressure and Return Lines on Model with Factory Joystick

- ***Note: 3-Point Mounted Backhoe Installation Voids Warranty. Use the Required Subframe Mounting Kit.***

IMPLEMENT FEATURES

MF FL1805 LOADER

- One Piece Main Frame with Tapered Arms and Single Cross Member
- Quick Attach Loader Frame Mount with Pin Lock
- Built-in Parking Stands
- (2) 1.57 inch Double Acting Lift Cylinders
- (2) 1.57 inch Double Acting Bucket Cylinders
- Simultaneous Operation of Lift/Lower and Curl/Dump Functions
- Hydraulic Lines Routed Inside Main Frame for Protection and Visibility
- Galvanized Pins with Recessed Grease Points
- 48-inch Standard Duty Skid Steer Bucket
- Grille Guard Standard
- Maximum Lift Height at Pivot Pins: 74 Inches
- Lift Capacity to Full Height at Pivot Pins: 922 lbs
- Breakout Force at Pivot Pins: 1,392 lbs
- Rated Hydraulic Pressure: 1,920 PSI
- Fits all GC1700 Series Tractors

MF BH2720 BACKHOE

- Digging Depth: 76 inches (1.9 m)
- Max Reach: 107 inches (2.7 m)
- Transport Height: 71 inches (1.8 m)
- Stabilizer Spread - Transport: 51 inches (1.3 m)
- Stabilizer Spread - Operating: 81 inches (2.1 m)
- Loading Height: 66 inches (1.7 m)
- Angle of Departure: 22 Degrees
- Swing Arc: 150 Degrees
- Bucket Rotation: 177 Degrees
- Shipping Weight: 573 lbs (260 kg)
- Digging Force Using Bucket Cylinder: 2184 lbs (911 kg)
- Digging Force Using Dipper Cylinder: 1541 lbs (699 kg)
- Single Boom Swing Cylinder

NOTES: *Dimensions may change due to tire size. Backhoe must be detached before installing the mid mount mower.*

AVAILABLE ATTACHMENTS (REFER TO IMPLEMENT SECTION)

- MF 2315, 2320, 2326 Mid Mounted Mowers (*Backhoe must be removed to operate mid mount mower.)*
- MF 2360 Front Mounted Snow Blower
- MF 2330 Front Mounted Rotary Broom
- MF 2335 Front Mounted Blade
- MF 2340 Front Mounted Heavy Duty Blade

GC1725M TLB GARDEN COMPACT

MASSEY FERGUSON®

Order Code	Catalog Number	Description	Factory Code	Approx. Weight	List Price

ORDER TRACTOR, LOADER AND BACKHOE BELOW
THEN ORDER ONE CODE FROM GROUP 02 THROUGH 04 AS REQUIRED

BASE MACHINE — GROUP 01

MFGC1725MB — **MFGC1725MB Hydrostatic Base Tractor Loader Backhoe**

F-J-LE3	72530557	4WD Platform Tractor with Joystick . . . . . Includes FL1805 Loader with Skid Steer Bucket and BH2720 Backhoe with 12-inch Bucket, Completely Assembled	55C18056		21,243.00

Note: For Additional Loader Options, Refer to Implements Price List Revision

*** ALL Tractors will be charged $135 for Assembly**

LOADER MANUALS - Required with Loader Package — GROUP 02

	72530696	MFFL1805 English Loader Operator Manual	No Charge
	72530687	MFFL1805 French Loader Operator Manual.	No Charge

TIRES & WHEELS — GROUP 03

NOTE: See Dealer / Field Installed Accessories for list of Tires & Wheels available as Loose Accessory orders. Tire and wheel options ordered with the tractor and not subject to availability can be returned via RGA. Contact Dealer Central with questions.

	72530702M	Front: 18x8.50-10 R-4 Industrial . . . . . Rear: 26x12.00-12 R-4 Industrial	20C639		752.00
	72530701M	Front: 18x8.50-10 Turf . . . . . Rear: 26x12.00-12 Turf	55C529	140	623.00
	72530700M	Front: 18x8.50-10 AG. . . . . Rear: 26x12.00-12 AG	60C591	148	696.00

TRACTOR OPERATOR'S MANUAL — GROUP 04

	72530559M	English Operator's and Safety Manual	No Charge
	72530560M	French Operator's and Safety Manual	No Charge

MASSEY FERGUSON®

RESERVED

GC1705 GARDEN COMPACT

(F.O.B. Port of Entry)

MASSEY FERGUSON®

TRACTOR FEATURES

POWER TRAIN

- Engine:
  22.5 Gross HP 3 Cyl Diesel
  1.12 L Displacement
  22.0 Net HP @ 2600 RPM
  18.7 PTO HP @ 2600 RPM
- Dry Type Single Air Cleaner
- Transmission: 2 Range Hydrostatic with Cruise Control
- Wet Disk Brakes
- Parking Brake
- Differential Lock
- PTO: 540 RPM Independent PTO
  2000 RPM Mid Independent PTO

HYDRAULIC SYSTEM

- 3-Point Hitch, Cat I With Directional Control, Auto Return Lever System
- Engine Driven Gear Pump
- 3-Point Hitch 4.3 GPM (16.5 LPM)
- Power Steering 2.0 GPM (7.5 LPM)
- Total Combined Flow 6.3 GPM (24 LPM)

INSTRUMENTS

- Tachometer / Hourmeter
- Engine Coolant Gauge Fuel Gauge
- Warning Lights: Electrical Charging, Oil Pressure and Water Temperature

OTHER STANDARD FEATURES

- Hydrostatic Power Steering
- Hand Accelerator
- Forward And Reverse Foot Pedal
- Electric Fuel Shut-Off
- 12 Volt Electrical System
- Battery: 390 Cold Cranking Amps
- Full Adjustable Seat With Retractable Seat Belt
- 2 Post Fixed Rops
- Tilt-Up Hood
- Turn Signals, Flashers, Tail Lights
- Factory Joystick Optional
- Hydraulic Manifold with Pressure and Return Lines on Model with Factory Joystick

- ***Note: 3-Point Mounted Backhoe Installation Voids Warranty. Use the Required Subframe Mounting Kit.***

IMPLEMENT FEATURES

MF DL95 LOADER

- One Piece Main Frame with Tapered Arms and Single Cross Member
- Quick Attach Loader Frame Mount with Pin Lock
- Built-in Parking Stands
- (2) 1.6 inch Double Acting Lift Cylinders
- (2) 1.75 inch Double Acting Bucket Cylinders
- Regenerative Hydraulics for Simultaneous Operation of Lift/Lower and Curl/Dump Functions
- Hydraulic Lines Routed Inside Main Frame for Protection and Visibility
- Galvanized Steel Bushings with Recessed Grease Points
- 48-inch Standard Duty Pin-Type Bucket
- Grille Guard Standard
- Maximum Lift Height: 72.8 Inches
- Lift Capacity to Full Height @ 19.6 inches Forward of Pivot Pin: 580 lbs
- Breakout Force: 920 lbs
- Rated Hydraulic Pressure: 1914 PSI
- Fits all GC1700 Series Tractors

AVAILABLE ATTACHMENTS (REFER TO IMPLEMENT SECTIONS)

- MF 2315, 2320 and 2326 Mid Mounted Mowers
- MF 2360 Front Mounted Snow Blower
- MF 2330 Front Mounted Rotary Broom
- MF 2335 Front Mounted Blade
- MF 2340 Front Mounted Heavy Duty Blade

GC1705 GARDEN COMPACT

MASSEY FERGUSON®

Order Code	Catalog Number	Description	Factory Code	Approx. Weight	List Price

ORDER TRACTOR ONLY OR
TRACTOR AND LOADER BELOW
THEN ORDER ONE CODE FROM GROUP 03 THROUGH 05 AS REQUIRED

BASE MACHINE — GROUP 01

MFGC1705		**MFGC1705 Hydrostatic Base Tractor**			
F-RE3	72530380	4wd Platform	65C7776		9,149.00
F-J-RE3	72530381	4wd Platform with Factory Joystick	65C8337		9,809.00

LOADER - For 4WD with Joystick Only — GROUP 02

	72533970	MFDL95 Loader Package, Pin Type Includes: Mount, Bucket, Hoses, Grille Guard	85C2499	486	2,941.00
	72533187	MFDL95 Loader Package, Skid Steer Type Includes: Mount, Quick Attach, Bucket, Hoses and Grille Guard	05C2816		3,313.00

Note: For Additional Loader Options, Refer to Implements Price List Revision

*** ALL Tractors will be charged $135 for Assembly**

TIRES & WHEELS - Choose only one set of Tires & Wheels — GROUP 03

NOTE: See Dealer / Field Installed Accessories for list of Tires & Wheels available as Loose Accessory orders. Tire and wheel options ordered with the tractor and not subject to availability can be returned via RGA. Contact Dealer Central with questions.

For Tractor or Tractor-Loader:

	72530281M	Front: 18x8.50-10 AG. Rear: 26x12.00-12 AG	65C585	148	689.00
	72530282M	Front: 18x8.50-10 Turf Rear: 26x12.00-12 Turf	45C524	140	617.00
	72530283M	Front: 18x8.50-10 R-4 Industrial Rear: 26x12.00-12 R-4 Industriall	25C633		745.00

FRENCH OPERATOR'S MANUAL — GROUP 04

	72530175	French Operator's Manual			No Charge

SUBJECT TO AVAILABILITY

GC1710 TLB GARDEN COMPACT

MASSEY FERGUSON®

(F.O.B. Port of Entry)

TRACTOR FEATURES

POWER TRAIN

- Engine:
  22.5 Gross HP 3 Cyl Diesel
  1.12 L Displacement
  22.0 Net HP @ 2600 RPM
  18.7 PTO HP @ 2600 RPM
- Dry Type Single Air Cleaner
- Transmission: 2 Range Hydrostatic with Cruise Control
- Wet Disk Brakes
- Parking Brake
- Differential Lock
- PTO: 540 RPM Independent PTO
  2000 RPM Mid Independent PTO

HYDRAULIC SYSTEM

- 3-Point Hitch, Cat I With Directional Control, Auto Return Lever System
- Engine Driven Gear Pump
- 3-Point Hitch 4.3 GPM (16.5 LPM)
- Power Steering 2.0 GPM (7.5 LPM)
- Total Combined Flow 6.3 GPM (24 LPM)

INSTRUMENTS

- Tachometer / Hourmeter
- Engine Coolant Gauge Fuel Gauge
- Warning Lights: Electrical Charging, Oil Pressure and Water Temperature

OTHER STANDARD FEATURES

- Hydrostatic Power Steering
- Hand Accelerator
- Forward And Reverse Foot Pedal
- Electric Fuel Shut-Off
- 12 Volt Electrical System
- Battery: 390 Cold Cranking Amps
- Full Adjustable Seat With Retractable Seat Belt
- 2 Post Folding Rops
- Tilt-Up Hood
- Turn Signals, Flashers, Tail Lights
- Factory Joystick
- Hydraulic Manifold with Pressure and Return Lines on Model with Factory Joystick

- ***Note: 3-Point Mounted Backhoe Installation Voids Warranty. Use the Required Subframe Mounting Kit.***

IMPLEMENT FEATURES

MF DL95 LOADER

- One Piece Main Frame with Tapered Arms and Single Cross Member
- Quick Attach Loader Frame Mount with Pin Lock
- Built-in Parking Stands
- (2) 1.6 inch Double Acting Lift Cylinders
- (2) 1.75 inch Double Acting Bucket Cylinders
- Regenerative Hydraulics for Simultaneous Operation of Lift/Lower and Curl/Dump Functions
- Hydraulic Lines Routed Inside Main Frame for Protection and Visibility
- Galvanized Steel Bushings with Recessed Grease Points
- 48-inch Standard Duty Pin-Type Bucket
- Grille Guard Standard
- Maximum Lift Height: 72.8 Inches
- Lift Capacity to Full Height @ 19.6 inches Forward of Pivot Pin: 580 lbs
- Breakout Force: 920 lbs
- Rated Hydraulic Pressure: 1914 PSI
- Fits all GC1700 Series Tractors

MF CB65 BACKHOE

- Digging Depth: 78 inch (2.0 m)
- Max Reach: 107 inch (2.7 m)
- Transport Height: 71 inches (1.8 m)
- Stabilizer Spread - Transport: 47 inch (1.2 m)
- Stabilizer Spread - Operating: 80 inch (2.0 m)
- Loading Height: 66 inch (1.7 m)
- Angle of Departure: 20 Degrees
- Swing Arc: 150 Degrees
- Bucket Rotation: 177 Degrees
- Shipping Weight: 635 lbs (288 kg)
- Digging Force Using Bucket Cylinder: 2476 lb (1123 kg)
- Digging Force Using Dipper Cylinder: 1748 lb (793 kg)
- Single Cylinder Boom Swing

NOTES: *Dimensions may change due to tire size. Backhoe must be detached before installing the mid mount mower.*

AVAILABLE ATTACHMENTS (REFER TO IMPLEMENT SECTIONS)

- MF 2315, 2320, 2326 Mid Mounted Mowers (*Backhoe must be removed to operate mid mount mower.)*
- MF 2360 Front Mounted Snow Blower
- MF 2330 Front Mounted Rotary Broom
- MF 2335 Front Mounted Blade
- MF 2340 Front Mounted Heavy Duty Blade

GC1710 TLB GARDEN COMPACT

MASSEY FERGUSON®

Order Code	Catalog Number	Description	Factory Code	Approx. Weight	List Price

ORDER TRACTOR, LOADER AND BACKHOE BELOW
THEN ORDER ONE CODE FROM GROUP 02 THROUGH 05 AS REQUIRED

BASE MACHINE — GROUP 01

MFGC1710 — **MFGC1710 Hydrostatic Base Tractor Loader Backhoe**

F-J-LE3	72530382	4WD Platform Tractor with Joystick . . . . . Includes DL95 Loader with Pin Type Bucket and CB65 Backhoe completely assembled	15C15078		17,739.00

LOADER OPTIONS — GROUP 02

	72533187M	Skid Steer Tool Carrier with 48-inch Skid Steer Bucket . **In Lieu of Base Pin Type Bucket**	25C327		385.00

Note: For Additional Loader Options, Refer to Implements Price List Revision

*** ALL Tractors will be charged $135 for Assembly**

TIRES & WHEELS — GROUP 03

NOTE: See Dealer / Field Installed Accessories for list of Tires & Wheels available as Loose Accessory orders. Tire and wheel options ordered with the tractor and not subject to availability can be returned via RGA. Contact Dealer Central with questions.

	72530281M	Front: 18x8.50-10 AG. . . . . Rear: 26x12.00-12 AG	65C585	148	689.00
	72530282M	Front: 18x8.50-10 Turf . . . . . Rear: 26x12.00-12 Turf	45C524	140	617.00
	72530283M	Front: 18x8.50-10 R-4 Industrial . . . . . Rear: 26x12.00-12 R-4 Industrial	25C633		745.00

BACKHOE OPTIONS — GROUP 04

	72533783ML	10-inch Bucket with 2 Teeth	90C317		374.00
	72533784ML	12-inch Bucket with 3 Teeth	85C357		421.00

FRENCH OPERATOR'S MANUAL — GROUP 05

	72530175	French Operator's Manual			No Charge

SUBJECT TO AVAILABILITY

GC1715 GARDEN COMPACT

(F.O.B. Port of Entry)

MASSEY FERGUSON®

TRACTOR FEATURES

POWER TRAIN

- Engine:
  25.0 Gross HP 3 Cyl Diesel
  1.12 L Displacement
  23.9 Net HP @ 3000 RPM
  19.6 PTO HP @ 3000 RPM
- Dry Type Single Air Cleaner
- Transmission: 2 Range Hydrostatic with Cruise Control
- Wet Disk Brakes
- Parking Brake
- Differential Lock
- PTO: 540 RPM Independent PTO
  2000 RPM Mid Independent PTO

HYDRAULIC SYSTEM

- 3-Point Hitch, Cat I With Directional Control, Auto Return Lever System
- Engine Driven Gear Pump
- 3-Point Hitch 4.9 GPM (18.8 LPM)
- Power Steering 2.0 GPM (7.5 LPM)
- Total Combined Flow 6.9 GPM (26.3 LPM)

INSTRUMENTS

- Tachometer / Hourmeter
- Engine Coolant Gauge Fuel Gauge
- Warning Lights: Electrical Charging and Oil Pressure and Water Temperature

OTHER STANDARD FEATURES

- Hydrostatic Power Steering
- Hand Accelerator
- Forward And Reverse Foot Pedal
- Electric Fuel Shut-Off
- 12 Volt Electrical System
- Battery: 390 Cold Cranking Amps
- Full Adjustable Seat With Retractable Seat Belt
- 2 Post Fixed ROPS
- Tilt-Up Hood
- Turn Signals, Flashers, Tail Lights
- Factory Joystick
- Hydraulic Manifold with Pressure and Return Lines on Model with Factory Joystick

- ***Note: 3-Point Mounted Backhoe Installation Voids Warranty. Use the Required Subframe Mounting Kit.***

IMPLEMENT FEATURES

MF DL95 LOADER

- One Piece Main Frame with Tapered Arms and Single Cross Member
- Quick Attach Loader Frame Mount with Pin Lock
- Built-in Parking Stands
- (2) 1.6 inch Double Acting Lift Cylinders
- (2) 1.75 inch Double Acting Bucket Cylinders
- Regenerative Hydraulics for Simultaneous Operation of Lift/Lower and Curl/Dump Functions
- Hydraulic Lines Routed Inside Main Frame for Protection and Visibility
- Galvanized Steel Bushings with Recessed Grease Points
- 48-inch Standard Duty Pin-Type Bucket
- Grille Guard Standard
- Maximum Lift Height: 72.8 Inches
- Lift Capacity to Full Height @ 19.6 inches Forward of Pivot Pin: 580 lbs
- Breakout Force: 920 lbs
- Rated Hydraulic Pressure: 1914 PSI
- Fits all GC1700 Series Tractors

AVAILABLE ATTACHMENTS (REFER TO IMPLEMENT SECTIONS)

- MF 2315, 2320 and 2326 Mid Mounted Mowers
- MF 2360 Front Mounted Snow Blower
- MF 2330 Front Mounted Rotary Broom
- MF 2335 Front Mounted Blade
- MF 2340 Front Mounted Heavy Duty Blade

GC1715 GARDEN COMPACT

MASSEY FERGUSON®

Order Code	Catalog Number	Description	Factory Code	Approx. Weight	List Price

ORDER TRACTOR ONLY OR
TRACTOR AND LOADER BELOW
THEN ORDER ONE CODE FROM GROUP 03 THROUGH 04 AS REQUIRED

BASE MACHINE — GROUP 01

MFGC1715		**MFGC1715 Hydrostatic Base Tractor**			
F-J-RE3	72530383	4wd Platform with Factory Joystick	65C9442		11,109.00

LOADER — GROUP 02

	72533970	MFDL95 Loader Package, Pin Type Includes: Mount, Bucket, Hoses, Grille Guard	85C2499	486	2,941.00
	72533187	MFDL95 Loader Package, Skid Steer Type Includes: Mount, Quick Attach, Bucket, Hoses and Grille Guard	05C2816		3,313.00

Note: For Additional Loader Options, Refer to Implements Price List Revision

*** ALL Tractors will be charged $135 for Assembly**

TIRES & WHEELS - Choose only one set of Tires & Wheels — GROUP 03

NOTE: See Dealer / Field Installed Accessories for list of Tires & Wheels available as Loose Accessory orders. Tire and wheel options ordered with the tractor and not subject to availability can be returned via RGA. Contact Dealer Central with questions.

		For Tractor or Tractor-Loader:			
	72530281M	Front: 18x8.50-10 AG. Rear: 26x12.00-12 AG	65C585	148	689.00
	72530282M	Front: 18x8.50-10 Turf Rear: 26x12.00-12 Turf	45C524	140	617.00
	72530283M	Front: 18x8.50-10 R-4 Industrial Rear: 26x12.00-12 R-4 Industrial	25C633		745.00

FRENCH OPERATOR'S MANUAL — GROUP 04

	72530175	French Operator's Manual	No Charge

SUBJECT TO AVAILABILITY

GC1720 TLB GARDEN COMPACT

TRACTOR LOADER BACKHOE

(F.O.B. Port of Entry)

MASSEY FERGUSON®

TRACTOR FEATURES

POWER TRAIN

- Engine:
  25.0 Gross HP 3 Cyl Diesel
  1.12 L Displacement
  23.9 Net HP @ 3000 RPM
  19.6 PTO HP @ 3000 RPM
- Dry Type Single Air Cleaner
- Transmission: 2 Range Hydrostatic with Cruise Control
- Wet Disk Brakes
- Parking Brake
- Differential Lock
- PTO: 540 RPM Independent PTO
  2000 RPM Mid Independent PTO

HYDRAULIC SYSTEM

- 3-Point Hitch, Cat I With Directional Control, Auto Return Lever System
- Engine Driven Gear Pump
- 3-Point Hitch 4.9 GPM (18.8 LPM)
- Power Steering 2.0 GPM (7.5 LPM)
- Total Combined Flow 6.9 GPM (26.3 LPM)

INSTRUMENTS

- Tachometer / Hourmeter
- Engine Coolant Gauge Fuel Gauge
- Warning Lights: Electrical Charging and Oil Pressure and Water Temperature

OTHER STANDARD FEATURES

- Hydrostatic Power Steering
- Hand Accelerator
- Side by Side Forward and Reverse Pedals
- Electric Fuel Shut-Off
- 12 Volt Electrical System
- Battery: 390 Cold Cranking Amps
- Full Adjustable Seat With Retractable Seat Belt
- 2 Post Folding Rops
- Tilt-Up Hood
- Turn Signals, Flashers, Tail Lights
- Factory Joystick
- Hydraulic Manifold with Pressure and Return Lines on Model with Factory Joystick

- ***Note: 3-Point Mounted Backhoe Installation Voids Warranty. Use the Required Subframe Mounting Kit.***

IMPLEMENT FEATURES

MF DL95 LOADER

- One Piece Main Frame with Tapered Arms and Single Cross Member
- Quick Attach Loader Frame Mount with Pin Lock
- Built-in Parking Stands
- (2) 1.6 inch Double Acting Lift Cylinders
- (2) 1.75 inch Double Acting Bucket Cylinders
- Regenerative Hydraulics for Simultaneous Operation of Lift/Lower and Curl/Dump Functions
- Hydraulic Lines Routed Inside Main Frame for Protection and Visibility
- Galvanized Steel Bushings with Recessed Grease Points
- 48-inch Standard Duty Pin-Type Bucket
- Grille Guard Standard
- Maximum Lift Height: 72.8 Inches
- Lift Capacity to Full Height @ 19.6 inches Forward of Pivot Pin: 580 lbs
- Breakout Force: 920 lbs
- Rated Hydraulic Pressure: 1914 PSI
- Fits all GC1700 Series Tractors

MF CB65 BACKHOE

- Digging Depth: 78 inch (2.0 m)
- Max Reach: 107 inch (2.7 m)
- Transport Height: 71 inches (1.8 m)
- Stabilizer Spread - Transport: 47 inch (1.2 m)
- Stabilizer Spread - Operating: 80 inch (2.0 m)
- Loading Height: 66 inch (1.7 m)
- Angle of Departure: 20 Degrees
- Swing Arc: 150 Degrees
- Bucket Rotation: 177 Degrees
- Shipping Weight: 635 lbs (288 kg)
- Digging Force Using Bucket Cylinder: 2476 lb (1123 kg)
- Digging Force Using Dipper Cylinder: 1748 lb (793 kg)
- Single Cylinder Boom Swing

NOTES: *Dimensions may change due to tire size. Backhoe must be detached before installing the mid mount mower.*

AVAILABLE ATTACHMENTS (REFER TO IMPLEMENT SECTIONS)

- MF 2315, 2320, 2326 Mid Mounted Mowers (*Backhoe must be removed to operate mid mount mower.)*
- MF 2360 Front Mounted Snow Blower
- MF 2330 Front Mounted Rotary Broom
- MF 2335 Front Mounted Blade
- MF 2340 Front Mounted Heavy Duty Blade

GC1720 TLB GARDEN COMPACT

MASSEY FERGUSON®

Order Code	Catalog Number	Description	Factory Code	Approx. Weight	List Price
		ORDER TRACTOR, LOADER AND BACKHOE BELOW THEN ORDER ONE CODE FROM GROUP 02 THROUGH 05 AS REQUIRED			
BASE MACHINE					**GROUP 01**
MFGC1720		**MFGC1720 Hydrostatic Base Tractor Loader Backhoe**			
F-J-LE3	72530384	4WD Platform Tractor with Joystick Includes DL95 Loader with Pin Type Bucket and CB65 Backhoe completely assembled	15C16608		19,539.00
LOADER OPTIONS					**GROUP 03**
	72533187M	Skid Steer Tool Carrier with 48-inch Skid Steer Bucket **In Lieu of Base Pin Type Bucket**	25C327		385.00
		Note: For Additional Loader Options, Refer to Implements Price List Revision			
		*** ALL Tractors will be charged $135 for Assembly**			
TIRES & WHEELS					**GROUP 02**
		NOTE: See Dealer / Field Installed Accessories for list of Tires & Wheels available as Loose Accessory orders. Tire and wheel options ordered with the tractor and not subject to availability can be returned via RGA. Contact Dealer Central with questions.			
	72530281M	Front: 18x8.50-10 AG. Rear: 26x12.00-12 AG	65C585	148	689.00
	72530282M	Front: 18x8.50-10 Turf Rear: 26x12.00-12 Turf	45C524	140	617.00
	72530283M	Front: 18x8.50-10 R-4 Industrial Rear: 26x12.00-12 R-4 Industrial	25C633		745.00
BACKHOE OPTIONS					**GROUP 03**
	72533783ML	10-inch Bucket with 2 Teeth	90C317		374.00
	72533784ML	12-inch Bucket with 3 Teeth	85C357		421.00
FRENCH OPERATOR'S MANUAL					**GROUP 04**
	72530175	French Operator's Manual			No Charge

SUBJECT TO AVAILABILITY

MF 1526

(F.O.B. Port of Entry)

MASSEY FERGUSON®

FEATURES

POWER TRAIN

- Engine:
  24.8 Gross HP Iseki 3-Cylinder Diesel
  1.49 L Displacement
  20.1 PTO HP @ 2600 RPM
  Dry Single Element Air Cleaner
  EPA and CARB Certified
  Emission Standard Category:
  Tier 4 Final

- Transmission:
  Hydrostatic: with 3 Non-Synchronized Ranges and Cruise Control with Auto-Throttle Control
- Wet Disc Brakes, Parking Brake
- Differential Lock: Foot Pedal Operated

- PTO:
  Rear - 540 RPM Independent Electro Hydraulic
  Mid - Optional 2000 RPM Independent through Parts

HYDRAULIC SYSTEM:

- 3-Point Hitch Cat I with Position and Response Control
- Lift Capacity @ 24 inches: 992 lbs
- Dual Engine Driven Gear Pumps
- Flow @ Remotes 5.5 GPM (20.8 LPM)
- Power Steering Pump 3.2 GPM (12.1 LPM)
- Total Combined 8.7 GPM (32.9 LPM)
- Can Support Single Rear Remote Valve (Optional, Field Installed)

INSTRUMENTS:

- Tachometer and Hour Meter
- Temperature and Fuel Gauges
- Warning Lights: High Beam indicator, Battery Charge (alt) Indicator and Flasher Indicators
- Key Operated Electronic Fuel Shutoff and Glow Plug Control

OTHER STANDARD FEATURES:

- Turn Signals, Flashers, Tail Lights, SMV Emblem
- Turn Buckle Stabilizers
- Hydrostatic Power Steering
- Foot Accelerator
- Hand Accelerator
- 2 Post Folding Rops and Retractable Seat Belt
- Removable Side Panels
- Side Shift Control Levers
- Adjustable Suspension Seat with Arm Rests
- Tilt Hood

- ***Note: 3-Point Mounted Backhoe Installation Voids Warranty.***

IMPLEMENT FEATURES

MF FLX2106 LOADER

- One Piece Main Frame with Tapered Arms and Single Cross Member
- Quick Attach Loader Frame Mount with Pin Lock
- Built-in Parking Stands
- (2) 1.77 inch Double Acting Lift Cylinders
- (2) 1.77 inch Double Acting Bucket Cylinders
- Simultaneous Operation of Lift/Lower and Curl/Dump Functions
- Hydraulic Lines Routed Inside Main Frame for Protection and Visibility
- Galvanized Steel Pins
- Recessed Grease Zerk Points
- 54-inch Standard Duty Pin-Type Bucket
- Grille Guard Standard

- Fits MF1526 with Turf or R4 Tires
- Maximum Lift Height at Pivot Pins: 83 Inches
- Lift Capacity to Full Height at Pivot Pins: 1,270 lbs
- Breakout Force at Pivot Pins: 1,870 lbs
- Rated Hydraulic Pressure: 2,132 PSI
- Maximum Roll Back Angle: 31 Degrees
- Dump Angle: 42 Degrees

MF 1526

MASSEY FERGUSON®

Order Code	Catalog Number	Description	Factory Code	Approx. Weight	List Price
		ORDER TRACTOR THEN ORDER REQUIRED TIRES			
BASE MACHINE					**GROUP 01**
MF1526H		**MF1526H Base Tractor**			
F-HS-RE3	72530241	4wd Platform with Hydrostatic Transmission	20C12930		15,212.00
LOADER PACKAGE					**GROUP 02**
	72537070	MFFLx2106 Loader Package, Skid Steer Includes: Loader with Grille Guard, Mounting Kit, Direct Control Valve Kit, and 54-inch Skid Steer Bucket with Quick Attach Tool Carrier	30C3500		4,118.00
LOADER MANUALS - Required with Loader Package					**GROUP 03**
	72530696	MFFLx2106 English Loader Operator Manual			No Charge
	72530687	MFFLx2106 French Loader Operator Manual			No Charge
TIRES & WHEELS - Required					**GROUP 04**
		Turf Tires Option			
	72530371M	Front: 25 x 8.50-14 4PR M-T Rear: 36 x13.50-15 4PR M-T	25C1092		1,285.00
		Industrial Tires Option			
	72530614M	Front: 25x8.50-14 6PR 4wd Industrial Rear: 14-17.5 NHS 6PR 4wd Industrial	80C1417		1,668.00

Note: For Additional Loader Options, Refer to Implements Price List Revision

*** ALL Tractors will be charged $325 for Assembly**

MF 1825E

(F.O.B. Port of Entry)

MASSEY FERGUSON®

TRACTOR FEATURES

POWER TRAIN

- Engine:
  - 24.0 Rated HP Iseki 3-Cylinder Liquid-Cooled Diesel
  - 1.49 L In-Direct Injection System
  - Electronic Engine Control
  - 20.4 PTO HP @ 2600 RPM - Gear
  - 19.2 PTO HP @ 2600 RPM - Hydrostatic
  - Emission Standard Category: Tier 4 Compliant, EPA and CARB Certified
- Single Stage, Dry Element Type Air Cleaner
- Transmission:
  - 8F / 8R Speeds Gear Transmission
  - Hydrostatic: 3 Non-Synchronized Ranges
- Sealed Wet Disc Brakes
- Pedal Operated Rear Differential Lock
- PTO:
  - Gear: Rear - 540 RPM Independent PTO
  - HST: Rear - 540 RPM Transmission Driven PTO with Overrunning Clutch
  - Not Mid PTO Capable

HYDRAULIC SYSTEM

- 3-Point Hitch Cat I with Position Control
- Lift Capacity @ Hitch Point: 2205 lbs (1000 kg)
  - @ 24 inches: 1598 lbs (725 kg)
- Dual Engine Driven Gear Pump
- Flow at Remotes 7.3 GPM (27.6 LPM)
- Power Steering Pump 3.6 GPM (13.8 LPM)
- Total Combined Flow 10.9 GPM (41.4 LPM)
- Can Support up to 2 Rear Remote Valves (Optional, Dealer Installed)

INSTRUMENTS

- Tachometer and Hour Meter
- Temperature Warning Light
- RPM, Fuel and Hour Meter Gauges
- Warning Lights: High Beam Indicator, Engine Oil Pressure, PTO Engagement, Battery Charge (alt) Indicator, Glow Plug Indicator and Flasher Indicators
- Key Operated Electronic Fuel Shutoff and Glow Plug Control
- Regen Lights

OTHER STANDARD FEATURES

- Steel Tilt-up Hood
- Adjustable Spring Suspension Seat
- 2 Post Folding ROPS and Retractable Seat Belt
- Turn Signals, Flashers, Tail Lights and SMV Emblem
- 2 Headlights

- ***Note: 3-Point Mounted Backhoe Installation Voids Warranty. Use the Required Subframe Mounting Kit.***

IMPLEMENT FEATURES

MF FLX2407 LOADER

- One Piece Main Frame with Tapered Arms and Single Cross Member
- Quick Attach Loader Frame Mount with Pin Lock
- Built-in Parking Stands
- (2) 2.0 inch Double Acting Lift Cylinders
- (2) 2.0 inch Double Acting Bucket Cylinders
- External Hydraulic Lines Routed Along Loader Main Frame for Protection and Visibility
- Galvanized Steel Pins
- Grease Zerk Points
- Skid Steer or Pin-Type Implement Attachments
- Grille Guard Standard
- Fits all MF1800E Series Economy Compact Tractor Models with R1 AG or R4 Industrial Tires
- Maximum Lift Height at Pivot Pins: 94 inches
- Lift Capacity to Full Height at Pivot Pins: 1,450 lbs
- Breakout Force at Pivot Pins: 2,288 lbs
- Rated Hydraulic Pressure: 2,132 PSI
- Maximum Roll Back Angle: 26 Degrees
- Dump Angle: 54 Degrees

MF 1825E

MASSEY FERGUSON®

Order Code	Catalog Number	Description	Factory Code	Approx. Weight	List Price

ORDER TRACTOR ONLY OR
TRACTOR AND LOADER BELOW
THEN ORDER ONE CODE FROM GROUP 03 THROUGH 05 AS REQUIRED

BASE MACHINE — GROUP 01

MF1825E1		**MF1825E Base Tractor**		
SG-RE3	72530707	4wd Platform Gear 8x8 Transmission	00C12087	14,220.00
MF1825EH		**MF1825EH Base Tractor**		
H-RE3	72530708	4wd Platform Hydrostatic Transmission	80C12807	15,068.00

LOADER PACKAGE — GROUP 02

	72530746	MFFLx2407 Loader Package, Skid Steer Includes: Loader with Grille Guard, Mounting Kit, Hydraulic Valve Kit, and 60-inch Skid Steer Bucket with Quick Attach Tool Carrier	25C4441	5,225.00
	ACX2818150	MFFLx2407 Loader Package, Pin Type Includes: Loader with Grille Guard, Mounting Kit, Hydraulic Valve Kit, and 60-inch Pin Type Bucket **(Subject to Availability)**	70C4064	4,782.00

LOADER MANUALS - Required - Choose One — GROUP 03

	72530689	MFFLx2407 Loader Operator Manual - English	No Charge
	72530684	MFFLx2407 Loader Operator Manual - French	No Charge

Note: For Additional Loader Options, Refer to Implements Price List Revision

*** ALL Tractors will be charged $325 for Assembly**

Order Code	Catalog Number	Description	Factory Code	Approx. Weight	List Price
TIRES & WHEELS - Required					**GROUP 04**
		AG Tires Options			
	72530609M	Front: 7-16 6PR R1 4wd AG Rear: 11.2x24 6PR R1 Adjustable 4wd AG	35C1505		1,771.00
		Industrial Tires Options			
	72530615M	Front: 27x8.50-15 6PR 4wd Industrial Rear: 15x19.5 6PR 4wd Industrial	95C1569		1,847.00
HYDRAULIC OPTIONS					**GROUP 05**
	72530756ML	Rear Remote Valve Kit with Lever (Shipped/Invoiced with Tractor, Dealer Installation Required)	50C637		750.00
TRACTOR MANUALS - Required - Choose One					**GROUP 06**
	ACX2713850M	English Operator's and Safety Manual			No Charge
	ACX2713860M	French Operator's and Safety Manual			No Charge

ACCESSORIES

See Accessories Chart - must be ordered separately from Tractor

MF 1835E

MASSEY FERGUSON®

(F.O.B. Port of Entry)

TRACTOR FEATURES

POWER TRAIN

- Engine:
  - 34.5 Gross HP Iseki 3-Cylinder Liquid-Cooled Diesel
  - 1.83 L Turbocharged, Common Rail Injection System
  - Internal Exhaust Gas Recirculation (EGR), Diesel Oxidation Catalyst (DOC), Regenerating Diesel Particulate Filter (DPF), Electronic Engine Control
  - 29.2 PTO HP @ 2600 RPM - Gear
  - 27.6 PTO HP @ 2600 RPM - Hydrostatic
  - Emission Standard Category: Tier 4 Final Compliant, EPA and CARB Certified
- Single Stage, Dry Element Type Air Cleaner
- Transmission:
  - 8F / 8R Speeds Gear Transmission
  - Hydrostatic: 3 Non-Synchronized Ranges
- Sealed Wet Disc Brakes
- Pedal Operated Rear Differential Lock
- PTO:
  - Gear: Rear - 540 RPM Independent PTO
  - HST: Rear - 540 RPM Transmission Driven PTO with Overrunning Clutch
  - Not Mid PTO Capable

HYDRAULIC SYSTEM

- 3-Point Hitch Cat I with Position Control
- Lift Capacity @ Hitch Point: 2205 lbs (1000 kg)
  - @ 24 inches: 1598 lbs (725 kg)
- Dual Engine Driven Gear Pump
- Flow at Remotes 7.6 GPM (28.9 LPM)
- Power Steering Pump 3.8 GPM (14.3 LPM)
- Total Combined Flow 11.4 GPM (43.2 LPM)
- Can Support up to 2 Rear Remote Valves (Optional, Dealer Installed)

INSTRUMENTS

- Tachometer
- Fuel and Hour Meters
- Indicator/Warning Lights: High Beam, Engine Oil Pressure, PTO Engagement, Battery Charge (alt), Glow Plug, Flashers, Water in Fuel, Neutral, Check Engine, NOX, Engine Coolant Temperature
- Key Operated Electronic Fuel Shutoff and Glow Plug Control
- Emission System Indicator Lamps

OTHER STANDARD FEATURES

- Steel Tilt-up Hood
- Adjustable Spring Suspension Seat
- 2 Post Folding ROPS and Retractable Seat Belt
- Turn Signals, Flashers, Tail Lights and SMV Emblem
- 2 Headlights

- ***Note: 3-Point Mounted Backhoe Installation Voids Warranty. Use the Required Subframe Mounting Kit.***

IMPLEMENT FEATURES

MF FLX2407 LOADER

- One Piece Main Frame with Tapered Arms and Single Cross Member
- Quick Attach Loader Frame Mount with Pin Lock
- Built-in Parking Stands
- (2) 2.0 inch Double Acting Lift Cylinders
- (2) 2.0 inch Double Acting Bucket Cylinders
- External Hydraulic Lines Routed Along Loader Main Frame for Protection and Visibility
- Galvanized Steel Pins
- Grease Zerk Points
- Skid Steer or Pin-Type Implement Attachments
- Grille Guard Standard
- Fits all MF1800E Series Economy Compact Tractor Models with R1 AG or R4 Industrial Tires
- Maximum Lift Height at Pivot Pins: 94 inches
- Lift Capacity to Full Height at Pivot Pins: 1,450 lbs
- Breakout Force at Pivot Pins: 2,288 lbs
- Rated Hydraulic Pressure: 2,132 PSI
- Maximum Roll Back Angle: 26 Degrees
- Dump Angle: 54 Degrees

Order Code	Catalog Number	Description	Factory Code	Approx. Weight	List Price

ORDER TRACTOR ONLY OR
TRACTOR AND LOADER BELOW
THEN ORDER ONE CODE FROM GROUP 03 THROUGH 06 AS REQUIRED

BASE MACHINE — GROUP 01

MF1835E1		**MF1835E Base Tractor**		
SG-RE3	72530739	4wd Platform Gear 8x8 Transmission	60C14293	16,816.00
MF1835EH		**MF1835EH Base Tractor**		
H-RE3	72530740	4wd Platform Hydrostatic Transmission	45C15025	17,677.00

LOADER PACKAGE — GROUP 02

	72530746	MFFLx2407 Loader Package, Skid Steer . . . . . Includes: Loader with Grille Guard, Mounting Kit, Hydraulic Valve Kit, and 60-inch Skid Steer Bucket with Quick Attach Tool Carrier	25C4441	5,225.00
	ACX2818150	MFFLx2407 Loader Package, Pin Type . . . . . Includes: Loader with Grille Guard, Mounting Kit, Hydraulic Valve Kit, and 60-inch Pin Type Bucket **(Subject to Availability)**	70C4064	4,782.00

LOADER MANUALS - Required - Choose One — GROUP 03

	72530689	MFFLx2407 Loader Operator Manual - English	No Charge
	72530684	MFFLx2407 Loader Operator Manual - French.	No Charge

Note: For Additional Loader Options, Refer to Implements Price List Revision

*** ALL Tractors will be charged $325 for Assembly**

Order Code	Catalog Number	Description	Factory Code	Approx. Weight	List Price
TIRES & WHEELS - Required					**GROUP 04**
		AG Tires Options			
	72530609M	Front: 7-16 6PR R1 4wd AG Rear: 11.2x24 6PR R1 Adjustable 4wd AG	35C1505		1,771.00
		Industrial Tires Options			
	72530615M	Front: 27x8.50-15 6PR 4wd Industrial Rear: 15x19.5 6PR 4wd Industrial	95C1569		1,847.00
HYDRAULIC OPTIONS					**GROUP 05**
	72530756ML	Rear Remote Valve Kit with Lever (Shipped/Invoiced with Tractor, Dealer Installation Required)	50C637		750.00
TRACTOR MANUALS - Required - Choose One					**GROUP 06**
	ACX2733730M	English Language Operator's Manual			In Base
	ACX2733740M	French Language Operator's Manual			No Charge

ACCESSORIES

See Accessories Chart - must be ordered separately from Tractor

MF 1840E

(F.O.B. Port of Entry)

MASSEY FERGUSON®

TRACTOR FEATURES

POWER TRAIN

- Engine:
  - 39.4 Gross HP Iseki 3-Cylinder Liquid-Cooled Diesel
  - 1.83 L Turbocharged, Common Rail Injection System
  - Internal Exhaust Gas Recirculation (EGR), Diesel Oxidation Catalyst (DOC), Regenerating Diesel Particulate Filter (DPF), Electronic Engine Control
  - 33.5 PTO HP @ 2600 RPM - Gear
  - 31.5 PTO HP @ 2600 RPM - Hydrostatic
  - Emission Standard Category: Tier 4 Final Compliant, EPA and CARB Certified
- Single Stage, Dry Element Type Air Cleaner
- Transmission:
  - 8F / 8R Speeds Gear Transmission
  - Hydrostatic: 3 Non-Synchronized Ranges
- Sealed Wet Disc Brakes
- Pedal Operated Rear Differential Lock
- PTO:
  - Gear: Rear - 540 RPM Independent PTO
  - HST: Rear - 540 RPM Transmission Driven PTO with Overrunning Clutch
  - Not Mid PTO Capable

HYDRAULIC SYSTEM

- 3-Point Hitch Cat I with Position Control
- Lift Capacity @ Hitch Point: 2205 lbs (1000 kg) @ 24 inches: 1598 lbs (725 kg)
- Dual Engine Driven Gear Pump
- Flow at Remotes 7.6 GPM (28.9 LPM)
- Power Steering Pump 4.1 GPM (15.4 LPM)
- Total Combined Flow 11.7 GPM (44.3 LPM)
- Can Support up to 2 Rear Remote Valves (Optional, Dealer Installed)

INSTRUMENTS

- Tachometer
- Fuel and Hour Meters
- Indicator/Warning Lights: High Beam, Engine Oil Pressure, PTO Engagement, Battery Charge (alt), Glow Plug, Flashers, Water in Fuel, Neutral, Check Engine, NOX, Engine Coolant Temperature
- Key Operated Electronic Fuel Shutoff and Glow Plug Control
- Emission System Indicator Lamps

OTHER STANDARD FEATURES

- Steel Tilt-up Hood
- Adjustable Spring Suspension Seat
- 2 Post Folding ROPS and Retractable Seat Belt
- Turn Signals, Flashers, Tail Lights and SMV Emblem
- 2 Headlights

- ***Note: 3-Point Mounted Backhoe Installation Voids Warranty. Use the Required Subframe Mounting Kit.***

IMPLEMENT FEATURES

MF FLX2407 LOADER

- One Piece Main Frame with Tapered Arms and Single Cross Member
- Quick Attach Loader Frame Mount with Pin Lock
- Built-in Parking Stands
- (2) 2.0 inch Double Acting Lift Cylinders
- (2) 2.0 inch Double Acting Bucket Cylinders
- External Hydraulic Lines Routed Along Loader Main Frame for Protection and Visibility
- Galvanized Steel Pins
- Grease Zerk Points
- Skid Steer or Pin-Type Implement Attachments
- Grille Guard Standard
- Fits all MF1800E Series Economy Compact Tractor Models with R1 AG or R4 Industrial Tires
- Maximum Lift Height at Pivot Pins: 94 inches
- Lift Capacity to Full Height at Pivot Pins: 1,450 lbs
- Breakout Force at Pivot Pins: 2,288 lbs
- Rated Hydraulic Pressure: 2,132 PSI
- Maximum Roll Back Angle: 26 Degrees
- Dump Angle: 54 Degrees

MF 1840E

MASSEY FERGUSON®

Order Code	Catalog Number	Description	Factory Code	Approx. Weight	List Price

ORDER TRACTOR ONLY OR
TRACTOR AND LOADER BELOW
THEN ORDER ONE CODE FROM GROUP 03 THROUGH 06 AS REQUIRED

BASE MACHINE — GROUP 01

MF1840E1		**MF1840E Base Tractor**		
SG-RE3	72530741	4wd Platform Gear 8x8 Transmission	45C16062	18,897.00
MF1840EH		**MF1840EH Base Tractor**		
H-RE3	72530742	4wd Platform Hydrostatic Transmission	30C16794	19,758.00

LOADER PACKAGE — GROUP 02

	72530746	MFFLx2407 Loader Package, Skid Steer . . . . . Includes: Loader with Grille Guard, Mounting Kit, Hydraulic Valve Kit, and 60-inch Skid Steer Bucket with Quick Attach Tool Carrier	25C4441	5,225.00
	ACX2818150	MFFLx2407 Loader Package, Pin Type . . . . . Includes: Loader with Grille Guard, Mounting Kit, Hydraulic Valve Kit, and 60-inch Pin Type Bucket **(Subject to Availability)**	70C4064	4,782.00

LOADER MANUALS - Required - Choose One — GROUP 03

	72530689	MFFLx2407 Loader Operator Manual - English	No Charge
	72530684	MFFLx2407 Loader Operator Manual - French.	No Charge

Note: For Additional Loader Options, Refer to Implements Price List Revision

*** ALL Tractors will be charged $325 for Assembly**

Order Code	Catalog Number	Description	Factory Code	Approx. Weight	List Price
TIRES & WHEELS - Required					**GROUP 04**
		AG Tires Options			
	72530609M	Front: 7-16 6PR R1 4wd AG Rear: 11.2x24 6PR R1 Adjustable 4wd AG	35C1505		1,771.00
		Industrial Tires Options			
	72530615M	Front: 27x8.50-15 6PR 4wd Industrial Rear: 15x19.5 6PR 4wd Industrial	95C1569		1,847.00
HYDRAULIC OPTIONS					**GROUP 05**
	72530756ML	Rear Remote Valve Kit with Lever (Shipped/Invoiced with Tractor, Dealer Installation Required)	50C637		750.00
TRACTOR MANUALS - Required - Choose One					**GROUP 06**
	ACX2733730M	English Language Operator's Manual			In Base
	ACX2733740M	French Language Operator's Manual			No Charge

ACCESSORIES

See Accessories Chart - must be ordered separately from Tractor

MASSEY FERGUSON®

RESERVED

MF 1735E

(F.O.B. Port of Entry)

MASSEY FERGUSON®

TRACTOR FEATURES

POWER TRAIN

- Engine:
  - 34.0 Rated HP Shibaura 3-Cylinder Liquid-Cooled Diesel
  - 1.49 L Turbocharged, In-Direct Injection System
  - Internal Exhaust Gas Recirculation (EGR), Diesel Oxidation Catalyst (DOC), Regenerating Diesel Particulate Filter (DPF), Electronic Engine Control
  - 29.0 PTO HP @ 2600 RPM - Gear
  - 27.2 PTO HP @ 2600 RPM - Hydrostatic
  - Emission Standard Category: Tier 4 Compliant, EPA and CARB Certified
- Single Stage, Dry Element Type Air Cleaner
- Transmission:
  - 8F / 8R Speeds Gear Transmission
  - Hydrostatic: 3 Non-Synchronized Ranges
- Sealed Wet Disc Brakes
- Pedal Operated Rear Differential Lock
- PTO:
  - Gear: Rear - 540 RPM Independent PTO
  - HST: Rear - 540 RPM Transmission Driven PTO with Overrunning Clutch
  - Not Mid PTO Capable

HYDRAULIC SYSTEM

- 3-Point Hitch Cat I with Position Control
- Lift Capacity @ Hitch Point: 2205 lbs (1000 kg) @ 24 inches: 1600 lbs (725 kg)
- Dual Engine Driven Gear Pump
- Flow at Remotes 6.7 GPM (25.5 LPM)
- Power Steering Pump 3.8 GPM (14.4 LPM)
- Total Combined Flow 10.5 GPM (39.9 LPM)
- Can Support up to 2 Rear Remote Valves (Optional, Dealer Installed)

INSTRUMENTS

- Tachometer and Hour Meter
- Temperature Warning Light
- RPM, Fuel and Hour Meter Gauges
- Warning Lights: High Beam Indicator, Engine Oil Pressure, PTO Engagement, Battery Charge (alt) Indicator, Glow Plug Indicator and Flasher Indicators
- Key Operated Electronic Fuel Shutoff and Glow Plug Control
- Regen Lights

OTHER STANDARD FEATURES

- Steel Tilt-up Hood
- Adjustable Spring Suspension Seat
- 2 Post Folding ROPS and Retractable Seat Belt
- Turn Signals, Flashers, Tail Lights and SMV Emblem
- 2 Headlights

- ***Note: 3-Point Mounted Backhoe Installation Voids Warranty. Use the Required Subframe Mounting Kit.***

IMPLEMENT FEATURES

MF FLX2407 LOADER

- One Piece Main Frame with Tapered Arms and Single Cross Member
- Quick Attach Loader Frame Mount with Pin Lock
- Built-in Parking Stands
- (2) 2.0 inch Double Acting Lift Cylinders
- (2) 2.0 inch Double Acting Bucket Cylinders
- External Hydraulic Lines Routed Along Loader Main Frame for Protection and Visibility
- Galvanized Steel Pins
- Grease Zerk Points
- Skid Steer or Pin-Type Implement Attachments
- Grille Guard Standard
- Fits all MF1700E Series Economy Compact Tractor Models with R1 AG or R4 Industrial Tires
- Maximum Lift Height at Pivot Pins: 94 inches
- Lift Capacity to Full Height at Pivot Pins: 1,450 lbs
- Breakout Force at Pivot Pins: 2,288 lbs
- Rated Hydraulic Pressure: 2,132 PSI
- Maximum Roll Back Angle: 26 Degrees
- Dump Angle: 54 Degrees

MF 1735E

MASSEY FERGUSON®

Order Code	Catalog Number	Description	Factory Code	Approx. Weight	List Price

ORDER TRACTOR ONLY OR
TRACTOR AND LOADER BELOW
THEN ORDER ONE CODE FROM GROUP 03 THROUGH 05 AS REQUIRED

BASE MACHINE — GROUP 01

MF1735E		**MF1735E Base Tractor**		
F-RE3	72530593	4wd Platform Gear 8x8 Transmission	60C13885	16,336.00
MF1735EH		**MF1735EH Base Tractor**		
F-H-RE3	72530594	4wd Platform Hydrostatic Transmission	45C14617	17,197.00

LOADER PACKAGE — GROUP 02

	72530651	MFFLx2407 Loader Package, Skid Steer . . . . . 25C4441 Includes: Loader with Grille Guard, Mounting Kit, Hydraulic Valve Kit, and 60-inch Skid Steer Bucket with Quick Attach Tool Carrier	5,225.00
	72530682	MFFLx2407 Loader Package, Pin Type . . . . . 70C4064 Includes: Loader with Grille Guard, Mounting Kit, Hydraulic Valve Kit, and 60-inch Pin Type Bucket	4,782.00

LOADER MANUALS - Required - Choose One — GROUP 03

	72530689	MFFLx2407 Loader Operator Manual - English	No Charge
	72530684	MFFLx2407 Loader Operator Manual - French.	No Charge

Note: For Additional Loader Options, Refer to Implements Price List Revision

*** ALL Tractors will be charged $325 for Assembly**

SUBJECT TO AVAILABILITY

MASSEY FERGUSON®

Order Code	Catalog Number	Description	Factory Code	Approx. Weight	List Price
TIRES & WHEELS - Required					**GROUP 04**
		AG Tires Options			
	72530609M	Front: 7-16 6PR R1 4wd AG Rear: 11.2x24 6PR R1 Adjustable 4wd AG	35C1505		1,771.00
		Industrial Tires Options			
	72530615M	Front: 27x8.50-15 6PR 4wd Industrial Rear: 15x19.5 6PR 4wd Industrial	95C1569		1,847.00
HYDRAULIC OPTIONS					**GROUP 05**
	72530488ML	Rear Remote Valve Kit with Lever (Shipped/Invoiced with Tractor, Dealer Installation Required)	50C637		750.00
TRACTOR MANUALS - Required - Choose One					**GROUP 06**
	72530597M	English Language Operator's Manual			In Base
	72530598M	French Language Operator's Manual			No Charge

ACCESSORIES

See Accessories Chart - must be ordered separately from Tractor

SUBJECT TO AVAILABILITY

MF 1740E

MASSEY FERGUSON®

(F.O.B. Port of Entry)

TRACTOR FEATURES

POWER TRAIN

- Engine:
  - 38.5 Rated HP Shibaura 3-Cylinder Liquid-Cooled Diesel
  - 1.49 L Turbocharged, In-Direct Injection System
  - Internal Exhaust Gas Recirculation (EGR), Diesel Oxidation Catalyst (DOC), Regenerating Diesel Particulate Filter (DPF), Electronic Engine Control
  - 32.7 PTO HP @ 2600 RPM - Gear
  - 30.8 PTO HP @ 2600 RPM - Hydrostatic
  - Emission Standard Category: Tier 4 Compliant, EPA and CARB Certified
- Single Stage, Dry Element Type Air Cleaner
- Transmission:
  - 8F / 8R Speeds Gear Transmission
  - Hydrostatic: 3 Non-Synchronized Ranges
- Sealed Wet Disc Brakes
- Pedal Operated Rear Differential Lock
- PTO:
  - Gear: Rear - 540 RPM Independent PTO
  - HST: Rear - 540 RPM Transmission Driven PTO with Overrunning Clutch
  - Not Mid PTO Capable

HYDRAULIC SYSTEM

- 3-Point Hitch Cat I with Position Control
- Lift Capacity @ Hitch Point: 2205 lbs (1000 kg) @ 24 inches: 1600 lbs (725 kg)
- Flow at Remotes 7.2 GPM (27.3 LPM)
- Power Steering Pump 4.1 GPM (15.4 LPM)
- Total Combined Flow 11.3 GPM (42.7 LPM)
- Can Support up to 2 Rear Remote Valves (Optional, Dealer Installed)

INSTRUMENTS

- Tachometer and Hour Meter
- Temperature Warning Light
- RPM, Fuel and Hour Meter Gauges
- Warning Lights: High Beam Indicator, Engine Oil Pressure, PTO Engagement, Battery Charge (alt) Indicator, Glow Plug Indicator and Flasher Indicators
- Key Operated Electronic Fuel Shutoff and Glow Plug Control
- Regen Lights

OTHER STANDARD FEATURES

- Steel Tilt-up Hood
- Adjustable Spring Suspension Seat
- 2 Post Folding ROPS and Retractable Seat Belt
- Turn Signals, Flashers, Tail Lights and SMV Emblem
- 2 Headlights

- ***Note: 3-Point Mounted Backhoe Installation Voids Warranty. Use the Required Subframe Mounting Kit.***

IMPLEMENT FEATURES

MF FLX2407 LOADER

- One Piece Main Frame with Tapered Arms and Single Cross Member
- Quick Attach Loader Frame Mount with Pin Lock
- Built-in Parking Stands
- (2) 2.0 inch Double Acting Lift Cylinders
- (2) 2.0 inch Double Acting Bucket Cylinders
- External Hydraulic Lines Routed Along Loader Main Frame for Protection and Visibility
- Galvanized Steel Pins
- Grease Zerk Points
- Skid Steer or Pin-Type Implement Attachments
- Grille Guard Standard
- Fits all MF1700E Series Economy Compact Tractor Models with R1 AG or R4 Industrial Tires
- Maximum Lift Height at Pivot Pins: 94 inches
- Lift Capacity to Full Height at Pivot Pins: 1,450 lbs
- Breakout Force at Pivot Pins: 2,288 lbs
- Rated Hydraulic Pressure: 2,132 PSI
- Maximum Roll Back Angle: 26 Degrees
- Dump Angle: 54 Degrees

MASSEY FERGUSON®

Order Code	Catalog Number	Description	Factory Code	Approx. Weight	List Price

ORDER TRACTOR ONLY OR
TRACTOR AND LOADER BELOW
THEN ORDER ONE CODE FROM GROUP 03 THROUGH 05 AS REQUIRED

BASE MACHINE — GROUP 01

MF1740E		**MF1740E Base Tractor**			
F-G-RE3	72530595	4wd Platform Gear 8x8 Transmission	45C15654		18,417.00
MF1740EH		**MF1740EH Base Tractor**			
F-H-RE3	72530596	4wd Platform Hydrostatic Transmission	30C16386		19,278.00

LOADER PACKAGE — GROUP 02

	72530651	MFFLx2407 Loader Package, Skid Steer Includes: Loader with Grille Guard, Mounting Kit, Hydraulic Valve Kit, and 60-inch Skid Steer Bucket with Quick Attach Tool Carrier	25C4441	5,225.00
	72530682	MFFLx2407 Loader Package, Pin Type Includes: Loader with Grille Guard, Mounting Kit, Hydraulic Valve Kit, and 60-inch Pin Type Bucket	70C4064	4,782.00

LOADER MANUALS - Required - Choose One — GROUP 03

	72530689	MFFLx2407 Loader Operator Manual - English	No Charge
	72530684	MFFLx2407 Loader Operator Manual - French	No Charge

Note: For Additional Loader Options, Refer to Implements Price List Revision

*** ALL Tractors will be charged $325 for Assembly**

SUBJECT TO AVAILABILITY

Order Code	Catalog Number	Description	Factory Code	Approx. Weight	List Price
TIRES & WHEELS - Required					**GROUP 04**
		AG Tires Options			
	72530609M	Front: 7-16 6PR R1 4wd AG Rear: 11.2x24 6PR R1 Adjustable 4wd AG	35C1505		1,771.00
		Industrial Tires Options			
	72530615M	Front: 27x8.50-15 6PR 4wd Industrial Rear: 15x19.5 6PR 4wd Industrial	95C1569		1,847.00
HYDRAULIC OPTIONS					**GROUP 05**
	72530488ML	Rear Remote Valve Kit with Lever (Shipped/Invoiced with Tractor, Dealer Installation Required)	50C637		750.00
TRACTOR MANUALS - Required - Choose One					**GROUP 06**
	72530597M	English Language Operator's Manual			In Base
	72530598M	French Language Operator's Manual			No Charge

ACCESSORIES

See Accessories Chart - must be ordered separately from Tractor

SUBJECT TO AVAILABILITY

MASSEY FERGUSON®

RESERVED

MF 1739E

MASSEY FERGUSON®

(F.O.B. Port of Entry)

TRACTOR FEATURES

POWER TRAIN

- Engine:
  - 38.5 Rated HP Shibaura 3-Cylinder Liquid-Cooled Diesel
  - 1.49 L Turbocharged, In-Direct Injection System
  - Internal Exhaust Gas Recirculation (EGR), Diesel Oxidation Catalyst (DOC), Regenerating Diesel Particulate Filter (DPF), Electronic Engine Control
  - 32.7 PTO HP @ 2600 RPM - Gear
  - 30.9 PTO HP @ 2600 RPM - Hydrostatic
  - Emission Standard Category: Tier 4 Compliant, EPA and CARB Certified
- Single Stage, Dry Element Type Air Cleaner
- Transmission:
  - 9F / 3R Speeds Gear Transmission
  - Hydrostatic: 3 Non-Synchronized Ranges
- Sealed Wet Disc Brakes
- Pedal Operated Rear Differential Lock
- PTO:
  - Gear: Rear - 540 RPM Independent PTO
  - HST: Rear - 540 RPM Transmission Driven PTO with Overrunning Clutch
  - Not Mid PTO Capable

HYDRAULIC SYSTEM

- 3-Point Hitch Cat I with Position Control
- Lift Capacity @ Hitch Point: 2205 lbs (1000 kg) @ 24 inches: 1600 lbs (725 kg)
- Flow at Remotes 7.2 GPM (27.3 LPM)
- Power Steering Pump 4.1 GPM (15.4 LPM)
- Total Combined Flow 11.3 GPM (42.7 LPM)
- Can Support up to 2 Rear Remote Valves (Optional, Dealer Installed)

INSTRUMENTS

- Tachometer and Hour Meter
- Temperature Warning Light
- RPM, Fuel and Hour Meter Gauges
- Warning Lights: High Beam Indicator, Engine Oil Pressure, PTO Engagement, Battery Charge (alt) Indicator, Glow Plug Indicator and Flasher Indicators
- Key Operated Electronic Fuel Shutoff and Glow Plug Control
- Regen Lights

OTHER STANDARD FEATURES

- Steel Tilt-up Hood
- Adjustable Spring Suspension Seat
- 2 Post Folding ROPS and Retractable Seat Belt
- Turn Signals, Flashers, Tail Lights and SMV Emblem
- 2 Headlights

- ***Note: 3-Point Mounted Backhoe Installation Voids Warranty. Use the Required Subframe Mounting Kit.***

IMPLEMENT FEATURES

MF FLX2407 LOADER

- One Piece Main Frame with Tapered Arms and Single Cross Member
- Quick Attach Loader Frame Mount with Pin Lock
- Built-in Parking Stands
- (2) 2.0 inch Double Acting Lift Cylinders
- (2) 2.0 inch Double Acting Bucket Cylinders
- External Hydraulic Lines Routed Along Loader Main Frame for Protection and Visibility
- Galvanized Steel Pins
- Grease Zerk Points
- Skid Steer or Pin-Type Implement Attachments
- Grille Guard Standard
- Fits all MF1700E Series Economy Compact Tractor Models with R1 AG or R4 Industrial Tires
- Maximum Lift Height at Pivot Pins: 94 inches
- Lift Capacity to Full Height at Pivot Pins: 1,450 lbs
- Breakout Force at Pivot Pins: 2,288 lbs
- Rated Hydraulic Pressure: 2,132 PSI
- Maximum Roll Back Angle: 26 degrees
- Dump Angle: 54 degrees

MASSEY FERGUSON®

Order Code	Catalog Number	Description	Factory Code	Approx. Weight	List Price

ORDER TRACTOR ONLY OR
TRACTOR AND LOADER BELOW
THEN ORDER ONE CODE FROM GROUP 03 THROUGH 05 AS REQUIRED

BASE MACHINE — GROUP 01

MF1739E		**MF1739E Base Tractor**		
F-G-RE3	72530357	4wd Platform Gear 9x3 Transmission	20C15174	17,852.00
MF1739EH		**MF1739EH Base Tractor**		
F-H-RE3	72530358	4wd Platform Hydrostatic Transmission	05C16280	19,153.00

LOADER PACKAGE — GROUP 02

	72530651	MFFLx2407 Loader Package, Skid Steer . . . . . Includes: Loader with Grille Guard, Mounting Kit, Hydraulic Valve Kit, and 60-inch Skid Steer Bucket with Quick Attach Tool Carrier	25C4441 5,225.00
	72530682	MFFLx2407 Loader Package, Pin Type . . . . . Includes: Loader with Grille Guard, Mounting Kit, Hydraulic Valve Kit, and 60-inch Pin Type Bucket	70C4064 4,782.00

LOADER MANUALS - Required — GROUP 03

	72530689	MFFLx2407 Loader Operator Manual - English	No Charge
	72530684	MFFLx2407 Loader Operator Manual - French.	No Charge

Note: For Additional Loader Options, Refer to Implements Price List Revision

*** ALL Tractors will be charged $325 for Assembly**

SUBJECT TO AVAILABILITY

Order Code	Catalog Number	Description	Factory Code	Approx. Weight	List Price
TIRES & WHEELS - Required					**GROUP 04**
		AG Tires Options			
	72530609M	Front: 7-16 6PR R1 4wd AG Rear: 11.2x24 6PR R1 Adjustable 4wd AG	35C1505		1,771.00
		Industrial Tires Options			
	72530615M	Front: 27x8.50-15 6PR 4wd Industrial Rear: 15x19.5 6PR 4wd Industrial	95C1569		1,847.00
HYDRAULIC OPTIONS					**GROUP 05**
	72530488ML	Rear Remote Valve Kit with Lever (Shipped/Invoiced with Tractor, Dealer Installation Required)	50C637		750.00

ACCESSORIES

See Accessories Chart - must be ordered separately from Tractor

SUBJECT TO AVAILABILITY

MF 1835M

(F.O.B. Port of Entry)

MASSEY FERGUSON®

TRACTOR FEATURES

POWER TRAIN

- Engine:
  36.2 Gross HP Iseki 3-Cylinder Liquid Cooled Diesel, 1.83 L Direct Injection, Turbocharged and Intercooled, Electronic Engine Control
  27.5 PTO HP @ 2600 RPM - Shuttle
  25.7 PTO HP @ 2600 RPM - Hydrostatic
  Emission Standard Category: Tier 4F
  Exhaust Gas Recirculation (EGR)
  Diesel Oxidation Catalyst (DOC)
  Regenerating Diesel Particulate Filter (DPF)
- Dual Element Dry Type Air Cleaner
- Transmission:
  12F/12R Power Shuttle with 4 Synchronized Gears and 3 Ranges.
- Servo-HST Electronic Hydrostatic Transmission with 3 Ranges, Cruise Control, Stall Guard, Max Speed Control and Response Control
- Sealed Wet Disc Brakes
- Pedal Operated Rear Differential Lock
- PTO:
  Rear - 540 RPM Independent Electro Hydraulic
  Mid - Optional 1916 RPM Independent

HYDRAULIC SYSTEM

- 3-Point Hitch Cat I with Position Control Standard, Draft Control Optional
- Lift Capacity @ 24 inches - 2,535 lb (1150 kg)
- Telescopic Stabilizers
- Telescopic Draft Link Ends
- Dual Engine Driven Gear Pump
- Flow at Remotes 12.6 GPM (47.8 LPM)
- Hydrostatic Power Steering
- One Rear Remote Valve Standard on Cab Models, up to 3 Possible. Loader Joystick Standard

INSTRUMENTS

- Combination Digital and Analog Front Dash Display
- Tachometer and Hour Meter
- Temperature and Fuel Gauges
- 4wd Engagement Indicator
- Warning Lights: High Beam Indicator, Engine Oil Pressure, PTO Engagement, Battery Charge (alt) Indicator, Glow Plug Indicator and Flasher Indicators
- Key Operated Electronic Fuel Shutoff and Glow Plug Control

OTHER STANDARD FEATURES

- ISO Mounted Flat Platform w/Molded Rubber Floor Mat
- One Piece Tilt-up Hood
- 3 Position Tilt Steering
- Premium Adjustable Suspension Seat with Arm Rest
- 2 Post Folding ROPS and Retractable Seat Belt
- Turn Signals, Flashers, Tail Lights and SMV Emblem
- 4 Headlights

CAB FEATURES

- Heating and Air Conditioning
- Mobile Phone Holder
- Wired for Radio and Speakers
- Radio Antenna
- Front and Rear Wiper / Washer
- 2 Front Work Lights
- 2 Rear Work Lights
- Rear and Side opening Windows
- Right and Left Entry Doors
- Right and Left External Mirrors
- Premium Digital Display w/Ground Speed (HST Only), Engine Coolant, Temperature, Fuel Level and Diagnostic Readout
- 12V Power Outlet
- ROPS Certified
- Recirculation Filter

- ***Note: 3-Point Mounted Backhoe Installation Voids Warranty. Use the Required Subframe Mounting Kit.***

IMPLEMENT FEATURES

MF FL2611 LOADER

- One Piece Main Frame with Tapered Arms and Single Cross Member
- Quick Attach Loader Frame Mount with Pin Lock
- Built-in Parking Stands
- (2) 2.36 inch Double Acting Lift Cylinders
- (2) 2.36 inch Double Acting Bucket Cylinders
- Hydraulic Lines Routed Inside Main Frame for Protection and Visibility
- 3rd Function Capable, Soft-Drive Capable
- Galvanized Steel Bushings with Recessed Grease Points
- Universal Skid Steer Tool Carrier
- Grille Guard Standard
- Fits MF1835M and MF1840M Compact Tractor Models with R1 AG, R3 Turf, or R4 Industrial Tires
- Maximum Lift Height at Pivot Pins: 100 Inches
- Lift Capacity to Full Height at Pivot Pins: 1,870 lbs
- Breakout Force at Pivot Pins: 2,950 lbs
- Rated Hydraulic Pressure: 2,277 PSI
- Maximum Roll Back Angle: 42 Degrees
- Dump Angle: 55 Degrees

MF 1835M

MASSEY FERGUSON®

Order Code	Catalog Number	Description	Factory Code	Approx. Weight	List Price

ORDER TRACTOR ONLY OR
TRACTOR AND LOADER BELOW
THEN ORDER ONE CODE FROM GROUP 03 THROUGH 08 AS REQUIRED

BASE MACHINE — GROUP 01

MF1835M		**MF1835M Power Shuttle Tractor**			
P-RE3-J	72530713	4wd Platform Power Shuttle 12x12, includes Factory Installed Joystick with Mid-Coupler	90C18609		21,894.00
P-V-CYE3-J	72530721	4wd Cab Power Shuttle 12x12 with 1 Rear Remote, includes Factory Installed Joystick with Mid-Coupler	60C25479		29,976.00
MF1835MH		**MF1835M Hydrostatic Tractor**			
H-RE3-J	72530718	4wd Platform HST, includes Factory Installed Joystick with Mid-Coupler	90C19136		22,514.00
H-V-CYE3-J	72530726	4wd Cab HST with 1 Rear Remote, includes Factory Installed Joystick with Mid-Coupler	05C26021		30,613.00

LOADER — GROUP 02

	ACX3299720	MFFL2611 Loader Package, Skid Steer Attach Includes: Mounting Kit, Grille Guard, Hose Kit and Bucket Level Indicator	80C3474		4,088.00

Note: For Additional Loader Options, Refer to Implements Price List Revision

*** ALL Tractors will be charged $325 for Assembly**

LOADER MANUALS - Required with Loader Package — GROUP 03

	72530698	English Loader Operator Manual			No Charge
	72530697	French Loader Operator Manual			No Charge

HYDRAULIC OPTIONS - Dealer Installed Kits — GROUP 04

	72530751ML	1st Auxiliary Valve/Lever Package Available for Platform Tractors (Standard for Cab) **(Shipped/Invoiced with Tractor, Dealer Installation Required)**	50C637		750.00
	72530752ML	2nd Auxiliary Valve/Lever Package Available for Cab Tractors Only **(Shipped/Invoiced with Tractor, Dealer Installation Required)**	50C637		750.00

Order Code	Catalog Number	Description	Factory Code	Approx. Weight	List Price

TIRES & WHEELS - Required — GROUP 05

NOTE: See Dealer / Field Installed Accessories for list of Tires & Wheels available as Loose Accessory orders. Tire and wheel options ordered with the tractor and not subject to availability can be returned via RGA. Contact Dealer Central with questions.

4wd AG Tires Options

7140701M	Front: 8-16 6 PR R1 4wd AG Rear: 13.6-24 6 PR R1 4wd AG	85C1836	2,161.00

4wd Turf Tires Options

72530620M	Front: 27x8.50-15 NHS 6P 4wd Turf Rear: 41x14.00-20 NHS 4P 4wd Turf	50C1351	1,590.00

4wd Industrial Tires Options (R4)

72530699M	Front: 10-16.5 NHS 6P 4wd Industrial Rear: 14.9-24 6P R4 4wd Industrial	05C1898	2,233.00
72530618M	Front: 10-16.5 NHS 6P 4wd Industrial Rear: 17.5L-24 6P R4 4wd Industrial	80C2114	2,488.00
72530616M	Front: 25x8.5-14 NHS 6P 4wd Industrial Rear: 15-19.5 6P R4 4wd Industrial	90C1524	1,794.00

Industrial Snow Application Tires Options

72530514M	Front: 250/75 R16 Nokian Rear: 400/80 R24 Nokian	80C3814	4,488.00

BUCKET OPTIONS - Recommended with Loader Packages — GROUP 06

72533147ML	66-inch Skid Steer Bucket	15C475	228	559.00
72533148ML	72-inch Skid Steer Bucket	75C505	228	595.00

TRACTOR MANUALS - Required - Choose One — GROUP 07

ACX2885700	English Language Tractor Operator's Manual	In Base
ACX2885710	French Language Tractor Operator's Manual	No Charge

ACCESSORIES — GROUP 08

72533180M	Single LED Work Light Kit for all Platform Models (Available through Assembly Center)	50C127	150.00

See Accessories Chart - must be ordered separately from Tractor:

72533986M	Grille Guard for use on Tractor without Loader (for use on MF1700E/MF1800M/MF1700M/2700E)	35C162	191.00
72533987M	Front Weight Bracket Kit (Requires Grille Guard 72533986M, holds up to 6 weights - only 1906066M91 Weights) (for use on MF1700E/MF1800M/MF1700M/2700E)	50C110	130.00

MASSEY FERGUSON®

RESERVED

MF 1840M

(F.O.B. Port of Entry)

MASSEY FERGUSON®

TRACTOR FEATURES

POWER TRAIN

- Engine:
  39.4 Gross HP Iseki 3-Cylinder liquid cooled Diesel, 1.83 L Direct Injection, Turbocharged and Intercooled, Electronic Engine Control
  30.0 PTO HP @ 2600 RPM - Shuttle
  27.9 PTO HP @ 2600 RPM - Hydrostatic
  Emission Standard Category: Tier 4F
  Exhaust Gas Recirculation (EGR)
  Diesel Oxidation Catalyst (DOC)
  Regenerating Diesel Particulate Filter (DPF)
- Dual Element Dry Type Air Cleaner
- Transmission:
  12F/12R Power Shuttle with 4 Synchronized Gears and 3 Ranges.
- Servo-HST Electronic Hydrostatic Transmission with 3 Ranges, Cruise Control, Stall Guard, Max Speed Control and Response Control
- Sealed Wet Disc Brakes
- Pedal Operated Rear Differential Lock
- PTO:
  Rear - 540 RPM Independent Electro Hydraulic
  Mid - Optional 1916 RPM Independent

HYDRAULIC SYSTEM

- 3-Point Hitch Cat I with Position Control Standard, Draft Control Optional
- Lift Capacity @ 24 inches - 2,535 lb (1150 kg)
- Telescopic Stabilizers
- Telescopic Draft Link Ends
- Dual Engine Driven Gear Pump
- Flow at Remotes 12.6 GPM (47.8 LPM)
- Hydrostatic Power Steering
- One Rear Remote Valve Standard on Cab Models, up to 3 Possible. Loader Joystick Standard

INSTRUMENTS

- Combination Digital and Analog Front Dash Display
- Tachometer and Hour Meter
- Temperature and Fuel Gauges
- 4wd Engagement Indicator
- Warning Lights: High Beam Indicator, Engine Oil Pressure, PTO Engagement, Battery Charge (alt) Indicator, Glow Plug Indicator and Flasher Indicators
- Key Operated Electronic Fuel Shutoff and Glow Plug Control

OTHER STANDARD FEATURES

- ISO Mounted Flat Platform w/Molded Rubber Floor Mat
- One Piece Tilt-up Hood
- 3 Position Tilt Steering
- Premium Adjustable Suspension Seat with Arm Rest
- 2 Post Folding ROPS and Retractable Seat Belt
- Turn Signals, Flashers, Tail Lights and SMV Emblem
- 4 Headlights

CAB FEATURES

- Heating and Air Conditioning
- Mobile Phone Holder
- Wired for Radio and Speakers
- Radio Antenna
- Front and Rear Wiper / Washer
- 2 Front Work Lights
- 2 Rear Work Lights
- Rear and Side opening Windows
- Right and Left Entry Doors
- Right and Left External Mirrors
- Premium Digital Display w/Ground Speed (HST Only), Engine Coolant, Temperature, Fuel Level and Diagnostic Readout
- 12V Power Outlet
- ROPS Certified
- Recirculation Filter

- ***Note: 3-Point Mounted Backhoe Installation Voids Warranty. Use the Required Subframe Mounting Kit.***

IMPLEMENT FEATURES

MF FL2611 LOADER

- One Piece Main Frame with Tapered Arms and Single Cross Member
- Quick Attach Loader Frame Mount with Pin Lock
- Built-in Parking Stands
- (2) 2.36 inch Double Acting Lift Cylinders
- (2) 2.36 inch Double Acting Bucket Cylinders
- Hydraulic Lines Routed Inside Main Frame for Protection and Visibility
- 3rd Function Capable, Soft-Drive Capable
- Galvanized Steel Bushings with Recessed Grease Points
- Universal Skid Steer Tool Carrier
- Grille Guard Standard
- Fits MF1835M and MF1840M Compact Tractor Models with R1 AG, R3 Turf, or R4 Industrial Tires
- Maximum Lift Height at Pivot Pins: 100 Inches
- Lift Capacity to Full Height at Pivot Pins: 1,870 lbs
- Breakout Force at Pivot Pins: 2,950 lbs
- Rated Hydraulic Pressure: 2,277 PSI
- Maximum Roll Back Angle: 42 Degrees
- Dump Angle: 55 Degrees

MF 1840M

MASSEY FERGUSON®

Order Code	Catalog Number	Description	Factory Code	Approx. Weight	List Price

ORDER TRACTOR ONLY OR
TRACTOR AND LOADER BELOW
THEN ORDER ONE CODE FROM GROUP 03 THROUGH 08 AS REQUIRED

BASE MACHINE — GROUP 01

MF1840M — **MF1840M Power Shuttle Tractor**

P-RE3-J	72530714	4wd Platform Power Shuttle 12x12, includes Factory Installed Joystick with Mid-Coupler	40C21066	24,784.00
P-V-CYE3-J	72530722	4wd Cab Power Shuttle 12x12 with 1 Rear Remote, includes Factory Installed Joystick with Mid-Coupler	90C27687	32,574.00

MF1840MH — **MF1840M Hydrostatic Tractor**

H-RE3-J	72530719	4wd Platform HST, includes Factory Installed Joystick with Mid-Coupler	90C21669	25,494.00
H-V-CYE3-J	72530727	4wd Cab HST with 1 Rear Remote, includes Factory Installed Joystick with Mid-Coupler	40C28223	33,204.00
H-V-CDE3-J	72530730	4wd **Deluxe Cab** HST with 1 Rear Remote, includes Factory Installed Joystick with Mid-Coupler	90C30458	35,834.00

Deluxe Cab Includes:
Air Ride Seat
Radio BT/CD/MP3
LED Work Lamps
Rear Defrost
Brake Lamps
Mesh Storage Pocket
Scissor Sun Visor

LOADER — GROUP 02

	ACX3299720	MFFL2611 Loader Package, Skid Steer Attach Includes: Mounting Kit, Grille Guard, Hose Kit and Bucket Level Indicator	80C3474	4,088.00

Note: For Additional Loader Options, Refer to Implements Price List Revision

*** ALL Tractors will be charged $325 for Assembly**

LOADER MANUALS - Required with Loader Package — GROUP 03

	72530698	English Loader Operator Manual	No Charge
	72530697	French Loader Operator Manual	No Charge

HYDRAULIC OPTIONS - Dealer Installed Kits — GROUP 04

	72530751ML	1st Auxiliary Valve/Lever Package Available for Platform Tractors (Standard for Cab) **(Shipped/Invoiced with Tractor, Dealer Installation Required)**	50C637	750.00
	72530752ML	2nd Auxiliary Valve/Lever Package Available for Cab Tractors Only **(Shipped/Invoiced with Tractor, Dealer Installation Required)**	50C637	750.00

Order Code	Catalog Number	Description	Factory Code	Approx. Weight	List Price

TIRES & WHEELS - Required — GROUP 05

NOTE: See Dealer / Field Installed Accessories for list of Tires & Wheels available as Loose Accessory orders. Tire and wheel options ordered with the tractor and not subject to availability can be returned via RGA. Contact Dealer Central with questions.

4wd AG Tires Options

7140701M	Front: 8-16 6 PR R1 4wd AG Rear: 13.6-24 6 PR R1 4wd AG	85C1836	2,161.00

4wd Turf Tires Options

72530620M	Front: 27x8.50-15 NHS 6P 4wd Turf Rear: 41x14.00-20 NHS 4P 4wd Turf	50C1351	1,590.00

4wd Industrial Tires Options (R4)

72530699M	Front: 10-16.5 NHS 6P 4wd Industrial Rear: 14.9-24 6P R4 4wd Industrial	05C1898	2,233.00
72530618M	Front: 10-16.5 NHS 6P 4wd Industrial Rear: 17.5L-24 6P R4 4wd Industrial	80C2114	2,488.00
72530616M	Front: 25x8.5-14 NHS 6P 4wd Industrial Rear: 15-19.5 6P R4 4wd Industrial	90C1524	1,794.00

Industrial Snow Application Tires Options

72530514M	Front: 250/75 R16 Nokian Rear: 400/80 R24 Nokian	80C3814	4,488.00

BUCKET OPTIONS - Recommended with Loader Packages — GROUP 06

72533147ML	66-inch Skid Steer Bucket	15C475	228	559.00
72533148ML	72-inch Skid Steer Bucket	75C505	228	595.00

TRACTOR MANUALS - Required - Choose One — GROUP 07

ACX2885700	English Language Tractor Operator's Manual	In Base
ACX2885710	French Language Tractor Operator's Manual	No Charge

ACCESSORIES — GROUP 08

72533180M	Single LED Work Light Kit for all Platform Models (Available through Assembly Center)	50C127	150.00

See Accessories Chart - must be ordered separately from Tractor:

72533986M	Grille Guard for use on Tractor without Loader (for use on MF1700E/MF1800M/MF1700M/2700E)	35C162	191.00
72533987M	Front Weight Bracket Kit (Requires Grille Guard 72533986M, holds up to 6 weights - only 1906066M91 Weights) (for use on MF1700E/MF1800M/MF1700M/2700E)	50C110	130.00

MASSEY FERGUSON®

RESERVED

MF 2850E

(F.O.B. Port of Entry)

MASSEY FERGUSON®

TRACTOR FEATURES

POWER TRAIN

- Engine:
  48.8 Gross Engine HP Iseki 4-Cylinder liquid cooled Diesel, 2.43 L Direct Injection, Turbocharged, Internal Exhaust Gas Recirculation (EGR), Diesel Oxidation Catalyst (DOC), Regenerating Diesel Particulate Filter (DPF), Electronic Engine Control
  41.4 PTO HP @ 2600 RPM - 8x8
  35.2 PTO HP @ 2600 RPM - Hydrostatic
  Emission Standard Category: Tier 4 Final CARB and EPA Certified
- Dual Element Dry Type Air Cleaner
- Transmission:
  - 8F/8R Synchro Shuttle with 2 Synchronized Gears (3rd and 4th) and 2 Ranges
  - Servo-Assist Electronic Hydrostatic Transmission with 3 Ranges and Cruise Control
- 4WD Front Axle with Center Drive Line and Bevel-gear Final Drives
- Sealed Wet Disc Brakes
- Pedal Operated Differential Lock
- PTO:
  Rear - 540 RPM Independent Electro Hydraulic

HYDRAULIC SYSTEM

- 3-Point Hitch Cat. I and II with Position Control Standard, Draft Control Optional
- Lift Capacity @ 24 inches - 2,425 lb (1100 kg)
- Telescopic Stabilizers
- Telescopic Draft Link Ends with Cat I and Cat II Cross Drilled Ball Ends
- Flow at Remotes 12.6 GPM (47.8 LPM)
- Hydrostatic Power Steering

ELECTRICAL

- 12-Volt DC System
- 90 Amp Alternator

INSTRUMENTS

- Combination Digital and Analog Front Dash Display
- Tachometer
- Fuel and Hour Meters
- Indicator/Warning Lights: High Beam, Engine Oil Pressure, PTO Engagement, Battery Charge (alt), Glow Plug, Flashers, Water in Fuel, Neutral, Check Engine, NOX, Engine Coolant Temperature
- Key Operated Electronic Fuel Shutoff and Glow Plug Control
- Emission System Indicator Lamps

OTHER STANDARD FEATURES

- ISO Mounted Flat Platform
- One Piece Tilt-up Hood
- 2 Post Folding ROPS
- Mechanical Suspension Seat with Seat Belt
- Turn Signals, Flashers, Tail Lights and SMV Emblem
- 2 Headlights
- Tool Box

NOTES:

- ***Specifications are Manufacturers estimates at time of publication and are subject to change without prior notification.***
- ***3-Point Backhoe Installation Voids Warranty***

IMPLEMENT FEATURES

MF FLX2815 PIN TYPE STYLE LOADER

- One Piece Main Frame with Tapered Arms and Single Cross Member
- Quick Attach Loader Frame Mount with Pin Lock
- Built-in Parking Stands
- (2) 2.76 inch Double Acting Lift Cylinders
- (2) 2.56 inch Double Acting Bucket Cylinders
- Hydraulic Valves with Integrated Joystick Mount to Right Side Loader Subframe
- Hydraulic Lines Routed Inside Main Frame for Protection and Visibility
- Galvanized Steel Bushings with Recessed Grease Points
- 72-inch Standard Duty Skid Steer Bucket
- Grille Guard Standard
- Fits MF2850E and MF2860E Tractor Models
- Maximum Lift Height: 111 Inches @ Pivot Pin
- Lift Capacity to Full Height @ Pivot Pin: 2,810 lbs
- Breakout Force: 4,240 lbs @ Pivot Pin
- Rated Hydraulic Pressure: 2350 PSI

MF 2850E

MASSEY FERGUSON®

Order Code	Catalog Number	Description	Factory Code	Approx. Weight	List Price

ORDER TRACTOR ONLY OR
TRACTOR AND LOADER BELOW
THEN ORDER ONE CODE FROM GROUP 03 THROUGH 08 AS REQUIRED

BASE MACHINE — GROUP 01

MF2850E1		**MF2850E Synchro Shuttle Tractor**			
S-RE3	72530733	4WD Platform Synchro Shuttle 8x8	70C20061		23,602.00
S-V-RE3	72530734	4WD Platform Synchro Shuttle 8x8 with 1 Rear Hydraulic Remote	65C20764		24,429.00
MF2850EH		**MF2850E Hydrostatic Base Tractor**			
H-V-RE3	72530735	4WD Platform HST with 1 Rear Hydraulic Remote	90C22281		26,214.00

LOADER — GROUP 02

	ACX3300130	MF FLx2815 Pin Type Style Loader Package Includes: Mounting Kit, Grille Guard, and Valve Kit with Hoses	05C3734		4,393.00

Note: For Additional Loader Options, Refer to Implements Price List Revision

*** ALL Tractors will be charged $325 for Assembly**

LOADER MANUALS - Required with MF FLx2815 Loader Package — GROUP 03

	72530698	English Language Loader Operator Manual			No Charge
	72530697	French Language Loader Operator Manual			No Charge

HYDRAULIC OPTIONS — GROUP 04

	72530755ML	2nd Auxiliary Valve/Lever Package (Requires 1st Valve to be Installed) (Shipped/Invoiced with Tractor, Dealer Installation Required)	50C637		750.00

Order Code	Catalog Number	Description	Factory Code	Approx. Weight	List Price

TIRES & WHEELS - Required — GROUP 05

NOTE: See Dealer / Field Installed Accessories for list of Tires & Wheels available as Loose Accessory orders. Tire and wheel options ordered with the tractor and not subject to availability can be returned via RGA. Contact Dealer Central with questions.

AG Tires Options

72530611M	Rear: 13.6-28 6P R1 4wd AG Front: 9.5-16 6P R1 4wd AG	10C2028		2,386.00
72530612M	Rear: 16.9-24 6P R1 4wd AG Front: 9.5-16 6P R1 4wd AG	95C2062		2,427.00

Turf Tires Options

72530621M	Rear: 44x18.00-20 4P 4wd Turf Front: 27x10.50-15 NHS 4P 4wd Turf	30C2106		2,478.00

Industrial Tires Options

72530618M	Rear: 17.5L-24 6P R4 4wd Industrial Front: 10-16.5 NHS 6P 4wd Industrial	80C2114		2,488.00

BUCKET OPTIONS - Recommended with Loader Packages — GROUP 06

72533148ML	72-inch Skid Steer Material Bucket (Requires 72530671ML)	75C505	228	595.00
72533149ML	72-inch High Volume Skid Steer Material Bucket Pre-Drilled to Accept a Bolt-on Cutting Edge (Requires 72530671ML)	15C866	345	1,019.00
72530648ML	72-inch Pin Type Material Bucket	00C476		560.00

TRACTOR MANUALS - Required — GROUP 07

ACX2899000M	English Language Operator Manual	No Charge
ACX2899020M	French Language Operator Manual	No Charge

ACCESSORIES - OPTIONAL — GROUP 08

72530671ML	Skid Steer Type Bucket Quick Attach Tool Carrier Kit (Required for 72533148ML/149ML Bucket on MFFLx2815 Loader)	25C480		565.00

See Accessories Chart - must be ordered separately from Tractor:

72533986M	Grille Guard for use on Tractor without Loader (for use on MF1700E/MF1700M/2800E/2800M)	35C162		191.00
72533987M	Front Weight Bracket Kit (Requires Grille Guard 72533986M, holds up to 6 weights - only 1906066M91 Weights) (for use on MF1700E/MF1700M/2800E/2800M)	50C110		130.00

MASSEY FERGUSON®

RESERVED

MF 2860E

(F.O.B. Port of Entry)

MASSEY FERGUSON®

FEATURES

POWER TRAIN

- Engine:
  57.3 Gross Engine HP Iseki 4-Cylinder liquid cooled Diesel, 2.43 L Direct Injection, Turbocharged, Internal Exhaust Gas Recirculation (EGR), Diesel Oxidation Catalyst (DOC), Regenerating Diesel Particulate Filter (DPF), Electronic Engine Control
  48.8 PTO HP @ 2600 RPM - 8x8
  45.0 PTO HP @ 2600 RPM - Hydrostatic
  Emission Standard Category: Tier 4 Final CARB and EPA Certified
- Dual Element Dry Type Air Cleaner
- Transmission:
  - 8F/8R Synchro Shuttle with 2 Synchronized Gears (3rd and 4th) and 2 Ranges
  - Servo-Assist Electronic Hydrostatic Transmission with 3 Ranges and Cruise Control
- 4WD Front Axle with Center Drive Line and Bevel-gear Final Drives
- Sealed Wet Disc Brakes
- Pedal Operated Differential Lock
- PTO:
  Rear - 540 RPM Independent Electro Hydraulic

HYDRAULIC SYSTEM

- 3-Point Hitch Cat. I and II with Position Control Standard, Draft Control Optional
- Lift Capacity @ 24 inches - 2,425 lb (1100 kg)
- Telescopic Stabilizers
- Telescopic Draft Link Ends with Cat I and Cat II Cross Drilled Ball Ends
- Flow at Remotes 12.6 GPM (47.8 LPM)
- Hydrostatic Power Steering

ELECTRICAL

- 12-Volt DC System
- 90 Amp Alternator

INSTRUMENTS

- Combination Digital and Analog Front Dash Display
- Tachometer
- Fuel and Hour Meters
- Indicator/Warning Lights: High Beam, Engine Oil Pressure, PTO Engagement, Battery Charge (alt), Glow Plug, Flashers, Water in Fuel, Neutral, Check Engine, NOX, Engine Coolant Temperature
- Key Operated Electronic Fuel Shutoff and Glow Plug Control
- Emission System Indicator Lamps

OTHER STANDARD FEATURES

- ISO Mounted Flat Platform
- One Piece Tilt-up Hood
- 2 Post Folding ROPS
- Mechanical Suspension Seat with Seat Belt
- Turn Signals, Flashers, Tail Lights and SMV Emblem
- 2 Headlights
- Tool Box

NOTES:

- ***Specifications are Manufacturers estimates at time of publication and are subject to change without prior notification.***
- ***3-Point Backhoe Installation Voids Warranty***

IMPLEMENT FEATURES

MF FLX2815 PIN TYPE STYLE LOADER

- One Piece Main Frame with Tapered Arms and Single Cross Member
- Quick Attach Loader Frame Mount with Pin Lock
- Built-in Parking Stands
- (2) 2.76 inch Double Acting Lift Cylinders
- (2) 2.56 inch Double Acting Bucket Cylinders
- Hydraulic Valves with Integrated Joystick Mount to Right Side Loader Subframe
- Hydraulic Lines Routed Inside Main Frame for Protection and Visibility
- Galvanized Steel Bushings with Recessed Grease Points
- 72-inch Standard Duty Skid Steer Bucket
- Grille Guard Standard
- Fits MF2850E and MF2860E Tractor Models
- Maximum Lift Height: 111 Inches @ Pivot Pin
- Lift Capacity to Full Height @ Pivot Pin: 2,810 lbs
- Breakout Force: 4,240 lbs @ Pivot Pin
- Rated Hydraulic Pressure: 2350 PSI

MF 2860E

MASSEY FERGUSON®

Order Code	Catalog Number	Description	Factory Code	Approx. Weight	List Price

ORDER TRACTOR ONLY OR
TRACTOR AND LOADER BELOW
THEN ORDER ONE CODE FROM GROUP 03 THROUGH 08 AS REQUIRED

BASE MACHINE — GROUP 01

MF2860E1		**MF2860E Synchro Shuttle Tractor**			
S-RE3	72530736	4wd Platform Synchro Shuttle 8x8	75C21891		25,755.00
S-V-RE3	72530737	4wd Platform Synchro Shuttle 8x8 with 1 Rear Hydraulic Remote	85C22593		26,581.00
MF2860EH		**MF2860E Hydrostatic Base Tractor**			
H-V-RE3	72530738	4wd Platform HST with 1 Rear Hydraulic Remote	30C23781		27,978.00

LOADER — GROUP 02

	ACX3300130	MF FLx2815 Pin Type Style Loader Package Includes: Mounting Kit, Grille Guard, and Valve Kit with Hoses	05C3734		4,393.00

Note: For Additional Loader Options, Refer to Implements Price List Revision

***ALL Tractors will be charged $325 for Assembly**

LOADER MANUALS - Required with MF FLx2815 Loader Package — GROUP 03

	72530698	English Language Loader Operator Manual			No Charge
	72530697	French Language Loader Operator Manual			No Charge

HYDRAULIC OPTIONS — GROUP 04

	72530755ML	2nd Auxiliary Valve/Lever Package (Requires 1st Valve to be Installed) (Shipped/Invoiced with Tractor, Dealer Installation Required)	50C637		750.00

Order Code	Catalog Number	Description	Factory Code	Approx. Weight	List Price
TIRES & WHEELS - Required					**GROUP 05**
NOTE: See Dealer / Field Installed Accessories for list of Tires & Wheels available as Loose Accessory orders. Tire and wheel options ordered with the tractor and not subject to availability can be returned via RGA. Contact Dealer Central with questions.					
		AG Tires Options			
	72530611M	Rear: 13.6-28 6P R1 4wd AG Front: 9.5-16 6P R1 4wd AG	10C2028		2,386.00
	72530612M	Rear: 16.9-24 6P R1 4wd AG Front: 9.5-16 6P R1 4wd AG	95C2062		2,427.00
		Turf Tires Options			
	72530621M	Rear: 44x18.00-20 4P 4wd Turf Front: 27x10.50-15 NHS 4P 4wd Turf	30C2106		2,478.00
		Industrial Tires Options			
	72530618M	Rear: 17.5L-24 6P R4 4wd Industrial Front: 10-16.5 NHS 6P 4wd Industrial	80C2114		2,488.00
BUCKET OPTIONS - Recommended with Loader Packages					**GROUP 06**
	72533148ML	72-inch Skid Steer Material Bucket (Requires 72530671ML)	75C505	228	595.00
	72533149ML	72-inch High Volume Skid Steer Material Bucket Pre-Drilled to Accept a Bolt-on Cutting Edge (Requires 72530671ML)	15C866	345	1,019.00
	72530648ML	72-inch Pin Type Material Bucket	00C476		560.00
TRACTOR MANUALS - Required					**GROUP 07**
	ACX2899000M	English Language Operator Manual			No Charge
	ACX2899020M	French Language Operator Manual			No Charge
ACCESSORIES - OPTIONAL					**GROUP 08**
	72530671ML	Skid Steer Type Bucket Quick Attach Tool Carrier Kit (Required for 72533148ML/149ML Bucket on MFFLx2815 Loader)	25C480		565.00
See Accessories Chart - must be ordered separately from Tractor:					
	72533986M	Grille Guard for use on Tractor without Loader (for use on MF1700E/MF1700M/2800E/2800M)	35C162		191.00
	72533987M	Front Weight Bracket Kit (Requires Grille Guard 72533986M, holds up to 6 weights - only 1906066M91 Weights) (for use on MF1700E/MF1700M/2800E/2800M)	50C110		130.00

MASSEY FERGUSON®

RESERVED

MF 2850M

(F.O.B. Port of Entry)

MASSEY FERGUSON®

TRACTOR FEATURES

POWER TRAIN

- Engine:
  48.8 Gross HP Iseki 4-Cylinder Liquid Cooled Diesel, 2.43 L Direct Injection, Turbocharged and Intercooled, Electronic Engine Control
  38.1 PTO HP @ 2600 RPM - Shuttle
  36.2 PTO HP @ 2600 RPM - Hydrostatic
  Emission Standard Category: Tier 4F
  Exhaust Gas Recirculation (EGR)
  Diesel Oxidation Catalyst (DOC)
  Regenerating Diesel Particulate Filter (DPF)
- Dual Element Dry Type Air Cleaner
- Transmission:
  12F/12R Power Shuttle with 4 Synchronized Gears and 3 Ranges.
- Servo-HST Electronic Hydrostatic Transmission with 3 Ranges, Cruise Control, Stall Guard, Max Speed Control and Response Control
- Sealed Wet Disc Brakes
- Pedal Operated Rear Differential Lock
- PTO:
  Rear - 540 RPM Independent Electro Hydraulic
  Mid - Optional 1916 RPM Independent for HST

HYDRAULIC SYSTEM

- 3-Point Hitch Cat I with Position Control Standard, Draft Control Standard on Models Equipped with Mechanical Transmission
- Lift Capacity @ 24 inches - 3,086 lb (1400 kg)
- Telescopic Stabilizers
- Telescopic Draft Link Ends
- Dual Engine Driven Gear Pump
- Flow at Remotes 12.6 GPM (47.8 LPM)
- Hydrostatic Power Steering
- One Rear Remote Valve Standard on Cab Models, up to 3 Possible. Loader Joystick Standard

INSTRUMENTS

- Combination Digital and Analog Front Dash Display
- Tachometer and Hour Meter
- Temperature and Fuel Gauges
- 4wd Engagement Indicator
- Warning Lights: High Beam Indicator, Engine Oil Pressure, PTO Engagement, Battery Charge (alt) Indicator, Glow Plug Indicator and Flasher Indicators
- Key Operated Electronic Fuel Shutoff and Glow Plug Control

OTHER STANDARD FEATURES

- ISO Mounted Flat Platform w/Molded Rubber Floor Mat
- One Piece Tilt-up Hood
- 3 Position Tilt Steering
- Premium Adjustable Suspension Seat with Arm Rest
- 2 Post Folding ROPS and Retractable Seat Belt
- Turn Signals, Flashers, Tail Lights and SMV Emblem
- 4 Headlights

CAB FEATURES

- Heating and Air Conditioning
- Mobile Phone Holder
- Wired for Radio and Speakers
- Radio Antenna
- Front and Rear Wiper / Washer
- 2 Front Work Lights
- 2 Rear Work Lights
- Rear and Side opening Windows
- Right and Left Entry Doors
- Right and Left External Mirrors
- Premium Digital Display with Ground Speed, Engine Coolant, Temperature, Fuel Level and Diagnostic Readout
- 12V Power Outlet
- ROPS Certified
- Recirculation Filter

- ***Note: 3-Point Mounted Backhoe Installation Voids Warranty. Use the Required Subframe Mounting Kit.***

IMPLEMENT FEATURES

MF FL2814 LOADER

- One Piece Main Frame with Tapered Arms and Single Cross Member
- Quick Attach Loader Frame Mount with Pin Lock
- Built-in Parking Stands
- (2) 2.76 inch Double Acting Lift Cylinders
- (2) 2.56 inch Double Acting Bucket Cylinders
- Hydraulic Lines Routed Inside Main Frame for Protection and Visibility
- 3rd Function Capable, Soft-Drive Capable
- Galvanized Steel Bushings with Recessed Grease Points
- Universal Skid Steer Implement Attachment
- Grille Guard Standard
- Fits MF2850M, 2855M, and 2860M Compact Tractor Models
- Maximum Lift Height at Pivot Pins: 111 Inches
- Lift Capacity to Full Height at Pivot Pins: 2,570 lbs
- Breakout Force at Pivot Pins: 3,910 lbs
- Rated Hydraulic Pressure: 2,277 PSI
- Maximum Roll Back Angle: 26 Degrees
- Dump Angle: 54 Degrees

MF 2850M

MASSEY FERGUSON®

Order Code	Catalog Number	Description	Factory Code	Approx. Weight	List Price

ORDER TRACTOR ONLY OR
TRACTOR AND LOADER BELOW
THEN ORDER ONE CODE FROM GROUP 03 THROUGH 08 AS REQUIRED

BASE MACHINE — GROUP 01

MF2850M		**MF2850M Power Shuttle Tractor**			
P-RE3-J	72530715	4wd Platform Power Shuttle 12x12, includes Factory Installed Joystick with Mid-Coupler	15C25312		29,779.00
P-V-CYE3-J	72530723	4wd Cab Power Shuttle 12x12 with 1 Rear Remote, includes Factory Installed Joystick with Mid-Coupler	65C31780		37,389.00
MF2850MH		**MF2850M Hydrostatic Tractor**			
H-RE3-J	72530720	4wd Platform HST, includes Factory Installed Joystick with Mid-Coupler	65C25830		30,389.00
H-V-CYE3-J	72530728	4wd Cab HST with 1 Rear Remote, includes Factory Installed Joystick with Mid-Coupler	15C32299		37,999.00
H-V-CDE3-J	72530731	4wd **Deluxe Cab** HST with 1 Rear Remote, includes Factory Installed Joystick with Mid-Coupler	65C34534		40,629.00

Deluxe Cab Includes:
Air Ride Seat
Radio BT/CD/MP3
LED Work Lamps
Rear Defrost
Brake Lamps
Mesh Storage Pocket
Scissor Sun Visor

LOADER — GROUP 02

	ACX2863310	MFFL2814 Loader Package, Skid Steer Attach Includes: Mounting Kit, Grille Guard, Hose Kit and Bucket Level Indicator	60C3906		4,596.00

Note: For Additional Loader Options, Refer to Implements Price List Revision

*** ALL Tractors will be charged $325 for Assembly**

LOADER MANUALS - Required with Loader Package — GROUP 03

	72530698	English Loader Operator Manual			No Charge
	72530697	French Loader Operator Manual			No Charge

HYDRAULIC OPTIONS - Dealer Installed Kits — GROUP 04

	72530751ML	1st Auxiliary Valve/Lever Package Available for Platform Tractors (Standard for Cab) **(Shipped/Invoiced with Tractor, Dealer Installation Required)**	50C637		750.00
	72530752ML	2nd Auxiliary Valve/Lever Package Available for Cab Tractors Only **(Shipped/Invoiced with Tractor, Dealer Installation Required)**	50C637		750.00

Order Code	Catalog Number	Description	Factory Code	Approx. Weight	List Price
TIRES & WHEELS - Required					**GROUP 05**
NOTE: See Dealer / Field Installed Accessories for list of Tires & Wheels available as Loose Accessory orders. Tire and wheel options ordered with the tractor and not subject to availability can be returned via RGA. Contact Dealer Central with questions.					
		4wd AG Tires Options			
	72530611M	Front: 9.5-16 6P R1 4wd AG Rear: 13.6-28 6P R1 4wd AG	10C2028		2,386.00
	72530612M	Front: 9.5-16 6P R1 4wd AG Rear: 16.9-24 6P R1 4wd AG	95C2062		2,427.00
		4wd Turf Tires Options			
	72530621M	Front: 27x10.50-15 4P 4wd Turf. Rear: 44x18.00-20 4P 4wd Turf	30C2106		2,478.00
		4wd Industrial Tires Options			
	72530699M	Front: 10-16.5 NHS 6P 4wd Industrial. Rear: 14.9-24 6P R4 4wd Industrial	05C1898		2,233.00
	72530618M	Front: 10-16.5 NHS 6P 4wd Industrial. Rear: 17.5L-24 6P R4 4wd Industrial	80C2114		2,488.00
		Industrial Snow Application Tires Options			
	72530537M	Front: 250/80 R16 Nokian Rear: 360/80 R28 Nokian	80C3814		4,488.00
BUCKET OPTIONS - Recommended with Loader Packages					**GROUP 06**
	72533148ML	72-inch Skid Steer Bucket	75C505	228	595.00
	72533149ML	72-inch High Volume Skid Steer Material Bucket Pre-Drilled to Accept a Bolt-on Cutting Edge	15C866	345	1,019.00
TRACTOR MANUALS - Required - Choose One					**GROUP 07**
	ACX2885720M	English Language Operator's Manual			In Base
	ACX2885730M	French Language Operator's Manual			No Charge
ACCESSORIES					**GROUP 08**
	72530587ML	Front Fender Package - 325mm Width, (Includes Fender and Mount Kit) Recommended for Government and Snow Removal Applications, not Recommended for R3 Turf Tires (For 4 Cylinder Tractor Models Only)	50C552		650.00
	72533180M	Single LED Work Light Kit for all Platform Models (Available through Assembly Center)	50C127		150.00
See Accessories Chart - must be ordered separately from Tractor:					
	72533986M	Grille Guard for use on Tractor without Loader (for use on MF1700E/MF1700M/2700E/2800M)	35C162		191.00
	72533987M	Front Weight Bracket Kit (Requires Grille Guard 72533986M, holds up to 6 weights - only 1906066M91 Weights) (for use on MF1700E/MF1700M/2700E/2800M)	50C110		130.00

MASSEY FERGUSON®

RESERVED

MF 2855M

(F.O.B. Port of Entry)

MASSEY FERGUSON®

FEATURES

POWER TRAIN

- Engine:
  53.6 Gross HP Iseki 4-Cylinder Liquid Cooled Diesel, 2.43 L Direct Injection, Turbocharged and Intercooled, Electronic Engine Control
  40.0 PTO HP @ 2600 RPM - Shuttle
  Emission Standard Category: Tier 4F
  Exhaust Gas Recirculation (EGR)
  Diesel Oxidation Catalyst (DOC)
  Regenerating Diesel Particulate Filter (DPF)
- Dual Element Dry Type Air Cleaner
- Transmission:
  12F/12R Power Shuttle with 4 Synchronized Gears and 3 Ranges.
- Sealed Wet Disc Brakes
- Pedal Operated Differential Lock
- PTO:
  Rear - 540 RPM Independent Electro Hydraulic
  Mid - Optional 1916 RPM Independent for HST

HYDRAULIC SYSTEM

- 3-Point Hitch Cat I & II with Position Control Standard, Draft Control Standard on Models Equipped with Mechanical Transmission
- Lift Capacity @ 24 inches - 3,086 lb (1400 kg)
- Telescopic Stabilizers
- Telescopic Draft Link Ends
- Dual Engine Driven Gear Pump
- Flow at Remotes 12.6 GPM (47.8 LPM)
- Hydrostatic Power Steering
- One Rear Remote Valve Standard on Cab Models, up to 3 Possible. Loader Joystick Standard

INSTRUMENTS

- Combination Digital and Analog Front Dash Display
- Tachometer and Hour Meter
- Temperature and Fuel Gauges
- 4wd Engagement Indicator
- Warning Lights: High Beam Indicator, Engine Oil Pressure, PTO Engagement, Battery Charge (alt) Indicator, Glow Plug Indicator and Flasher Indicators
- Key Operated Electronic Fuel Shutoff and Glow Plug Control

OTHER STANDARD FEATURES

- ISO Mounted Flat Platform w/Molded Rubber Floor Mat
- One Piece Tilt-up Hood
- 3 Position Tilt Steering
- Premium Adjustable Suspension Seat with Arm Rest
- 2 Post Folding ROPS and Retractable Seat Belt
- Turn Signals, Flashers, Tail Lights and SMV Emblem
- 4 Headlights

CAB FEATURES

- Heating and Air Conditioning
- Mobile Phone Holder
- Wired for Radio and Speakers
- Radio Antenna
- Front and Rear Wiper / Washer
- 2 Front Work Lights
- 2 Rear Work Lights
- Rear and Side opening Windows
- Right and Left Entry Doors
- Right and Left External Mirrors
- Premium Digital Display with Ground Speed, Engine Coolant, Temperature, Fuel Level and Diagnostic Readout
- 12V Power Outlet
- ROPS Certified
- Recirculation Filter

- ***Note: 3-Point Mounted Backhoe Installation Voids Warranty. Use the Required Subframe Mounting Kit.***

IMPLEMENT FEATURES

MF FL2814 LOADER

- One Piece Main Frame with Tapered Arms and Single Cross Member
- Quick Attach Loader Frame Mount with Pin Lock
- Built-in Parking Stands
- (2) 2.76 inch Double Acting Lift Cylinders
- (2) 2.56 inch Double Acting Bucket Cylinders
- Hydraulic Lines Routed Inside Main Frame for Protection and Visibility
- 3rd Function Capable, Soft-Drive Capable
- Galvanized Steel Bushings with Recessed Grease Points
- Universal Skid Steer Implement Attachment
- Grille Guard Standard
- Fits MF2850M, 2855M, and 2860M Compact Tractor Models
- Maximum Lift Height at Pivot Pins: 111 Inches
- Lift Capacity to Full Height at Pivot Pins: 2,570 lbs
- Breakout Force at Pivot Pins: 3,910 lbs
- Rated Hydraulic Pressure: 2,277 PSI
- Maximum Roll Back Angle: 26 Degrees
- Dump Angle: 54 Degrees

MF 2855M

MASSEY FERGUSON®

Order Code	Catalog Number	Description	Factory Code	Approx. Weight	List Price

ORDER TRACTOR ONLY OR
TRACTOR AND LOADER BELOW
THEN ORDER ONE CODE FROM GROUP 03 THROUGH 08 AS REQUIRED

BASE MACHINE — GROUP 01

MF2855M		**MF2855M Power Shuttle Tractor**			
P-RE3-J	72530716	4wd Platform Power Shuttle 12x12, includes Factory Installed Joystick with Mid-Coupler	40C26319		30,964.00
P-V-CYE3-J	72530724	4wd Cab Power Shuttle 12x12 with 1 Rear Remote, includes Factory Installed Joystick with Mid-Coupler	40C32762		38,544.00

LOADER — GROUP 02

	ACX2863310	MFFL2814 Loader Package, Skid Steer Attach Includes: Mounting Kit, Grille Guard, Hose Kit and Bucket Level Indicator	60C3906		4,596.00

Note: For Additional Loader Options, Refer to Implements Price List Revision

*** ALL Tractors will be charged $325 for Assembly**

LOADER MANUALS - Required with Loader Package — GROUP 03

	72530698	English Loader Operator Manual			No Charge
	72530697	French Loader Operator Manual			No Charge

HYDRAULIC OPTIONS - Dealer Installed Kits — GROUP 04

	72530751ML	1st Auxiliary Valve/Lever Package Available for Platform Tractors (Standard for Cab) **(Shipped/Invoiced with Tractor, Dealer Installation Required)**	50C637		750.00
	72530752ML	2nd Auxiliary Valve/Lever Package Available for Cab Tractors Only **(Shipped/Invoiced with Tractor, Dealer Installation Required)**	50C637		750.00

Order Code	Catalog Number	Description	Factory Code	Approx. Weight	List Price

TIRES & WHEELS - Required — GROUP 05

NOTE: See Dealer / Field Installed Accessories for list of Tires & Wheels available as Loose Accessory orders. Tire and wheel options ordered with the tractor and not subject to availability can be returned via RGA. Contact Dealer Central with questions.

4wd AG Tires Options

72530611M	Front: 9.5-16 6P R1 4wd AG Rear: 13.6-28 6P R1 4wd AG	10C2028		2,386.00
72530612M	Front: 9.5-16 6P R1 4wd AG Rear: 16.9-24 6P R1 4wd AG	95C2062		2,427.00

4wd Turf Tires Options

72530621M	Front: 27x10.50-15 4P 4wd Turf. Rear: 44x18.00-20 4P 4wd Turf	30C2106		2,478.00

4wd Industrial Tires Options

72530699M	Front: 10-16.5 NHS 6P 4wd Industrial. Rear: 14.9-24 6P R4 4wd Industrial	05C1898		2,233.00
72530618M	Front: 10-16.5 NHS 6P 4wd Industrial. Rear: 17.5L-24 6P R4 4wd Industrial	80C2114		2,488.00

Industrial Snow Application Tires Options

72530537M	Front: 250/80 R16 Nokian Rear: 360/80 R28 Nokian	80C3814		4,488.00

BUCKET OPTIONS - Recommended with Loader Packages — GROUP 06

72533148ML	72-inch Skid Steer Bucket.	75C505	228	595.00
72533149ML	72-inch High Volume Skid Steer Material Bucket Pre-Drilled to Accept a Bolt-on Cutting Edge	15C866	345	1,019.00

TRACTOR MANUALS - Required - Choose One — GROUP 07

ACX2885720M	English Language Operator's Manual	In Base
ACX2885730M	French Language Operator's Manual	No Charge

ACCESSORIES — GROUP 08

72530587ML	Front Fender Package - 325mm Width, (Includes Fender and Mount Kit) Recommended for Government and Snow Removal Applications, not Recommended for R3 Turf Tires (For 4 Cylinder Tractor Models Only)	50C552	650.00
72533180M	Single LED Work Light Kit for all Platform Models (Available through Assembly Center)	50C127	150.00

See Accessories Chart - must be ordered separately from Tractor:

72533986M	Grille Guard for use on Tractor without Loader (for use on MF1700E/MF1700M/2700E/2800M)	35C162	191.00
72533987M	Front Weight Bracket Kit (Requires Grille Guard 72533986M, holds up to 6 weights - only 1906066M91 Weights) (for use on MF1700E/MF1700M/2700E/2800M)	50C110	130.00

MASSEY FERGUSON®

RESERVED

MF 2860M

(F.O.B. Port of Entry)

MASSEY FERGUSON®

FEATURES

POWER TRAIN

- Engine:
  60.3 Gross HP Iseki 4-Cylinder Liquid Cooled Diesel, 2.43 L Direct Injection, Turbocharged and Intercooled, Electronic Engine Control
  47.0 PTO HP @ 2600 RPM - Shuttle
  44.6 PTO HP @ 2600 RPM - Hydrostatic
  Emission Standard Category: Tier 4F
  Exhaust Gas Recirculation (EGR)
  Diesel Oxidation Catalyst (DOC)
  Regenerating Diesel Particulate Filter (DPF)
- Dual Element Dry Type Air Cleaner
- Transmission
  12Fx12R Power Shuttle with 4 Synchronized Gears and 3 Ranges
- Servo-HST Electronic Hydrostatic Transmission with 3 Ranges, Cruise Control, Stall Guard, Max Speed Control and Response Control
- Sealed Wet Disc Brakes
- Pedal Operated Differential Lock
- PTO:
  Rear - 540 RPM Independent Electro Hydraulic
  Mid - Optional 2023 RPM Independent for HST

HYDRAULIC SYSTEM

- 3-Point Hitch Cat I & II with Position Control Standard, Draft Control Standard on Models Equipped with Mechanical Transmission
- Lift Capacity @ 24 inches - 3,307 lb (1500 kg) for Shuttle
  Lift Capacity @ 24 inches - 3,086 lb (1400 kg) for HST
- Telescopic Stabilizers
- Telescopic Draft Link Ends
- Dual Engine Driven Gear Pumps
- Flow at Remotes 12.7 GPM (48.0 LPM) for Shuttle and 12.6 GPM (47.8 LPM) for HST
- Hydrostatic Power Steering
- One Rear Remote Valve Standard on Cab Models, up to 3 Possible. Loader Joystick Standard

INSTRUMENTS

- Combination Digital and Analog Front Dash Display
- Tachometer and Hour Meter
- Temperature and Fuel Gauges
- 4wd Engagement Indicator
- Warning Lights: High Beam Indicator, Engine Oil Pressure, PTO Engagement, Battery Charge (alt) Indicator, Glow Plug Indicator and Flasher Indicators
- Key Operated Electronic Fuel Shutoff and Glow Plug Control

OTHER STANDARD FEATURES

- ISO Mounted Flat Platform w/Molded Rubber Floor Mat
- One Piece Tilt-up Hood
- 3 Position Tilt Steering
- Premium Adjustable Suspension Seat with Arm Rest
- 2 Post Folding ROPS and Retractable Seat Belt
- Turn Signals, Flashers, Tail Lights and SMV Emblem
- 4 Headlights

CAB FEATURES

- Heating and Air Conditioning
- Mobile Phone Holder
- Wired for Radio and Speakers
- Radio Antenna
- Front and Rear Wiper / Washer
- 2 Front Work Lights
- 2 Rear Work Lights
- Rear and Side opening Windows
- Right and Left Entry Doors
- Right and Left External Mirrors
- Premium Digital Display with Ground Speed, Engine Coolant, Temperature, Fuel Level and Diagnostic Readout
- 12V Power Outlet
- ROPS Certified
- Recirculation Filter

- ***Note: 3-Point Mounted Backhoe Installation Voids Warranty. Use the Required Subframe Mounting Kit.***

IMPLEMENT FEATURES

MF FL2814 LOADER

- One Piece Main Frame with Tapered Arms and Single Cross Member
- Quick Attach Loader Frame Mount with Pin Lock
- Built-in Parking Stands
- (2) 2.76 inch Double Acting Lift Cylinders
- (2) 2.56 inch Double Acting Bucket Cylinders
- Hydraulic Lines Routed Inside Main Frame for Protection and Visibility
- 3rd Function Capable, Soft-Drive Capable
- Galvanized Steel Bushings with Recessed Grease Points
- Universal Skid Steer Implement Attachment
- Grille Guard Standard
- Fits MF2850M, 2855M, and 2860M Compact Tractor Models
- Maximum Lift Height at Pivot Pins: 111 Inches
- Lift Capacity to Full Height at Pivot Pins: 2,570 lbs
- Breakout Force at Pivot Pins: 3,910 lbs
- Rated Hydraulic Pressure: 2,277 PSI
- Maximum Roll Back Angle: 26 Degrees
- Dump Angle: 54 Degrees

MF 2860M

MASSEY FERGUSON®

Order Code	Catalog Number	Description	Factory Code	Approx. Weight	List Price

ORDER TRACTOR ONLY OR
TRACTOR AND LOADER BELOW
THEN ORDER ONE CODE FROM GROUP 03 THROUGH 08 AS REQUIRED

BASE MACHINE — GROUP 01

MF2860M		**MF2860M Power Shuttle Tractor**			
P-RE3-J	72530717	4wd Platform Power Shuttle 12x12, includes Factory Installed Joystick with Mid-Coupler	15C28712		33,779.00
P-V-CYE3-J	72530725	4wd Cab Power Shuttle 12x12 with 1 Rear Remote, includes Factory Installed Joystick with Mid-Coupler	80C35502		41,768.00
MF2860MH		**MF2860M Hydrostatic Base Tractor**			
H-V-CYE3-J	72530729	4wd Cab HST with 1 Rear Remote, includes Factory Installed Joystick with Mid-Coupler	15C34866		41,019.00
H-V-CDE3-J	72530732	4wd **Deluxe Cab** HST with 1 Rear Remote, includes Factory Installed Joystick with Mid-Coupler	65C37101		43,649.00
		Deluxe Cab Includes: Air Ride Seat Radio BT/CD/MP3 LED Work Lamps Rear Defrost Brake Lamps Mesh Storage Pocket Scissor Sun Visor			

LOADER — GROUP 02

	ACX2863330	MFFL2814 Loader Package, Skid Steer Attach for Power Shuttle Transmission Includes: Mounting Kit, Grille Guard, Hose Kit and Bucket Level Indicator	60C3906		4,596.00
	ACX2863320	MFFL2814 Loader Package, Skid Steer Attach for Hydrostatic Transmission Includes: Mounting Kit, Grille Guard, Hose Kit and Bucket Level Indicator	60C3906		4,596.00

Note: For Additional Loader Options, Refer to Implements Price List Revision

*** ALL Tractors will be charged $325 for Assembly**

LOADER MANUALS - Required with Loader Package — GROUP 03

	72530698	English Loader Operator Manual	No Charge
	72530697	French Loader Operator Manual	No Charge

Order Code	Catalog Number	Description	Factory Code	Approx. Weight	List Price
HYDRAULIC OPTIONS - Dealer Installed Kits					**GROUP 04**
	72530753ML	1st Auxiliary Valve/Lever Package Available for Platform Tractors (Standard for Cab) **(Shipped/Invoiced with Tractor, Dealer Installation Required)**	50C637		750.00
	72530754ML	2nd Auxiliary Valve/Lever Package Available for Power Shuttle Cab Tractors Only **(Shipped/Invoiced with Tractor, Dealer Installation Required)**	50C637		750.00
	72530752ML	2nd Auxiliary Valve/Lever Package Available for HST Cab Tractors Only (Standard and Deluxe) **(Shipped/Invoiced with Tractor, Dealer Installation Required)**	50C637		750.00
TIRES & WHEELS - Required					**GROUP 05**
NOTE: See Dealer / Field Installed Accessories for list of Tires & Wheels available as Loose Accessory orders. Tire and wheel options ordered with the tractor and not subject to availability can be returned via RGA. Contact Dealer Central with questions.					
		4wd AG Tires Option			
	72530750M	Front: 9.5-16 6P R1 4wd AG Rear: 16.9-26 10P R1 4wd AG (For Power Shuttle Only - both Platform and Cab)	65C2183		2,569.00
	72530611M	Front: 9.5-16 6P R1 4wd AG Rear: 13.6-28 6P R1 4wd AG (For HST Only - both Standard and Deluxe Cabs)	10C2028		2,386.00
	72530612M	Front: 9.5-16 6P R1 4wd AG Rear: 16.9-24 6P R1 4wd AG (For HST Only - both Standard and Deluxe Cabs)	95C2062		2,427.00
		4wd Turf Tires Option			
	72530621M	Front: 27x10.50-15 4P 4wd Turf Rear: 44x18.00-20 4P 4wd Turf	30C2106		2,478.00
		4wd Industrial Tires Option			
	72530619M	Front: 12-16.5 NHS 6P R4 4wd Industrial Rear: 18.4-24 8P R4 4wd Industrial (For Power Shuttle Only - both Platform and Cab)	30C2565		3,018.00
	72530699M	Front: 10-16.5 NHS 6P 4wd Industrial Rear: 14.9-24 6P R4 4wd Industrial (For HST Only - both Standard and Deluxe Cabs)	05C1898		2,233.00
	72530618M	Front: 10-16.5 NHS 6P 4wd Industrial Rear: 17.5L-24 6P R4 4wd Industrial (For HST Only - both Standard and Deluxe Cabs)	80C2114		2,488.00
		Industrial Snow Application Tires Options			
	72530516M	Front: 250/80 R16 Nokian Rear: 400/80 R28 Nokian (For Power Shuttle Only - both Platform and Cab)	20C3988		4,692.00
	72530537M	Front: 250/80 R16 Nokian Rear: 360/80 R28 Nokian (For HST Only - both Standard and Deluxe Cabs)	80C3814		4,488.00

Order Code	Catalog Number	Description	Factory Code	Approx. Weight	List Price
BUCKET OPTIONS - Recommended with Loader Packages					**GROUP 06**
	72533148ML	72-inch Skid Steer Bucket	75C505	228	595.00
	72533149ML	72-inch High Volume Skid Steer Material Bucket Pre-Drilled to Accept a Bolt-on Cutting Edge	15C866	345	1,019.00
TRACTOR MANUALS - Required - Choose One					**GROUP 07**
	ACX2885720M	English Language Operator's Manual			In Base
	ACX2885730M	French Language Operator's Manual			No Charge
ACCESSORIES					**GROUP 08**
	72530587ML	Front Fender Package - 325mm Width, (Includes Fender and Mount Kit) Recommended for Government and Snow Removal Applications, not Recommended for R3 Turf Tires (For 4 Cylinder Tractor Models Only)	50C552		650.00
	72533180M	Single LED Work Light Kit for all Platform Models (Available through Assembly Center)	50C127		150.00
See Accessories Chart - must be ordered separately from Tractor:					
	72533986M	Grille Guard for use on Tractor without Loader (for use on MF1700E/MF1700M/2700E/2800M)	35C162		191.00
	72533987M	Front Weight Bracket Kit (Requires Grille Guard 72533986M, holds up to 6 weights - only 1906066M91 Weights) (for use on MF1700E/MF1700M/2700E/2800M)	50C110		130.00

MF 1735M

(F.O.B. Port of Entry)

MASSEY FERGUSON®

TRACTOR FEATURES

POWER TRAIN

- Engine:
  36.2 Rated HP Shibaura 3-Cylinder Liquid-Cooled Diesel, 1.66 L Direct Injection, Turbocharged and Intercooled, Electronic Engine Control
  27.5 PTO HP @ 2600 RPM - Shuttle
  26.4 PTO HP @ 2600 RPM - Hydrostatic
  Emission Standard Category: Tier 4
- Dual Element Dry Type Air Cleaner
- Transmission:
  12F/12R Power Shuttle with 4 Synchronized Gears and 3 Ranges.
- Servo-HST Electronic Hydrostatic Transmission with 3 Ranges, Cruise Control, Stall Guard, Max Speed Control and Response Control
- Sealed Wet Disc Brakes
- Pedal Operated Rear Differential Lock
- PTO:
  Rear - 540 RPM Independent Electro Hydraulic
  Mid - Optional 1916 RPM Independent

HYDRAULIC SYSTEM

- 3-Point Hitch Cat I with Position Control Standard, Draft Control Optional
- Lift Capacity @ 24 inches - 2,535 lb (1150 kg)
- Telescopic Stabilizers
- Telescopic Draft Link Ends
- Dual Engine Driven Gear Pump
- Flow at Remotes 12.1 GPM (45.6 LPM)
- Hydrostatic Power Steering
- One Rear Remote Valve Standard on Cab Models, up to 3 Possible. Loader Joystick Standard

INSTRUMENTS

- Combination Digital and Analog Front Dash Display
- Tachometer and Hour Meter
- Temperature and Fuel Gauges
- 4wd Engagement Indicator
- Warning Lights: High Beam Indicator, Engine Oil Pressure, PTO Engagement, Battery Charge (alt) Indicator, Glow Plug Indicator and Flasher Indicators
- Key Operated Electronic Fuel Shutoff and Glow Plug Control

OTHER STANDARD FEATURES

- ISO Mounted Flat Platform w/Molded Rubber Floor Mat
- One Piece Tilt-up Hood
- 3 Position Tilt Steering
- Deluxe Adjustable Suspension Seat with Arm Rest
- 2 Post Folding ROPS and Retractable Seat Belt
- Turn Signals, Flashers, Tail Lights and SMV Emblem
- 4 Headlights

CAB FEATURES

- Heating and Air Conditioning
- Mobile Phone Holder
- Wired for Radio and Speakers
- Radio Antenna
- Front and Rear Wiper / Washer
- 2 Front Work Lights
- 2 Rear Work Lights
- Rear and Side opening Windows
- Right and Left Entry Doors
- Right and Left External Mirrors
- Deluxe Digital Display w/Ground Speed (HST Only), Engine Coolant, Temperature, Fuel Level and Diagnostic Readout
- 12V Power Outlet
- ROPS Certified
- Recirculation Filter

- ***Note: 3-Point Mounted Backhoe Installation Voids Warranty. Use the Required Subframe Mounting Kit.***

IMPLEMENT FEATURES

MF FL2611 LOADER

- One Piece Main Frame with Tapered Arms and Single Cross Member
- Quick Attach Loader Frame Mount with Pin Lock
- Built-in Parking Stands
- (2) 2.36 inch Double Acting Lift Cylinders
- (2) 2.36 inch Double Acting Bucket Cylinders
- Hydraulic Lines Routed Inside Main Frame for Protection and Visibility
- 3rd Function Capable, Soft-Drive Capable
- Galvanized Steel Bushings with Recessed Grease Points
- Universal Skid Steer Implement Attachment
- Grille Guard Standard
- Fits MF1735M and MF1740M Compact Tractor Models with R1 AG, R3 Turf, or R4 Industrial Tires
- Maximum Lift Height at Pivot Pins: 100 Inches
- Lift Capacity to Full Height at Pivot Pins: 1,870 lbs
- Breakout Force at Pivot Pins: 2,950 lbs
- Rated Hydraulic Pressure: 2,277 PSI
- Maximum Roll Back Angle: 42 Degrees
- Dump Angle: 55 Degrees

MF 1735M

MASSEY FERGUSON®

Order Code	Catalog Number	Description	Factory Code	Approx. Weight	List Price

ORDER TRACTOR ONLY OR
TRACTOR AND LOADER BELOW
THEN ORDER ONE CODE FROM GROUP 03 THROUGH 08 AS REQUIRED

BASE MACHINE — GROUP 01

MF1735M		**MF1735M Power Shuttle Tractor**			
P-RE3-J	72530517	4wd Platform Power Shuttle 12x12, includes Factory Installed Joystick with Mid-Coupler	15C18240		21,459.00
P-V-CYE3-J	72530525	4wd Cab Power Shuttle 12x12 with 1 Rear Remote, includes Factory Installed Joystick with Mid-Coupler	85C25109		29,541.00
MF1735MH		**MF1735M Hydrostatic Tractor**			
H-RE3-J	72530522	4wd Platform HST, includes Factory Installed Joystick with Mid-Coupler	65C18809		22,129.00
H-V-CYE3-J	72530530	4wd Cab HST with 1 Rear Remote, includes Factory Installed Joystick with Mid-Coupler	80C25693		30,228.00

LOADER — GROUP 02

	72533074	MFFL2611 Loader Package, Skid Steer Attach Includes: Mounting Kit, Grille Guard, Hose Kit and Bucket Level Indicator	80C3474		4,088.00

Note: For Additional Loader Options, Refer to Implements Price List Revision

*** ALL Tractors will be charged $325 for Assembly**

LOADER MANUALS - Required with Loader Package — GROUP 03

	72530698	English Loader Operator Manual			No Charge
	72530697	French Loader Operator Manual			No Charge

HYDRAULIC OPTIONS - Dealer Installed Kits — GROUP 04

	72530493ML	1st Auxiliary Valve/Lever Package Available for Platform Tractors (Standard for Cab) **(Shipped/Invoiced with Tractor, Dealer Installation Required)**	50C637		750.00
	72530549ML	2nd Auxiliary Valve/Lever Package Available for Cab Tractors Only **(Shipped/Invoiced with Tractor, Dealer Installation Required)**	50C637		750.00

SUBJECT TO AVAILABILITY

MASSEY FERGUSON®

Order Code	Catalog Number	Description	Factory Code	Approx. Weight	List Price

TIRES & WHEELS - Required — GROUP 05

NOTE: See Dealer / Field Installed Accessories for list of Tires & Wheels available as Loose Accessory orders. Tire and wheel options ordered with the tractor and not subject to availability can be returned via RGA. Contact Dealer Central with questions.

4wd AG Tires Options

7140701M	Front: 8-16 6 PR R1 HTL Rear: 13.6x24 6 PR R1 HTL Adjustable	85C1836	2,161.00

4wd Turf Tires Options

72530620M	Front: 27x8.50-15 NHS 6P 4wd Turf Rear: 41x14.00-20 NHS 4P 4wd Turf	50C1351	1,590.00

4wd Industrial Tires Options (R4)

72530699M	Front: 10-16.5 NHS 6P 4wd Industrial Rear: 14.9-24 6P R4 4wd Industrial	05C1898	2,233.00
72530618M	Front: 10-16.5 NHS 6P 4wd Industrial Rear: 17.5L-24 6P R4 4wd Industrial	80C2114	2,488.00
72530616M	Front: 25x8.5-14 NHS 6P 4wd Industrial Rear: 15-19.5 6P R4 4wd Industrial	90C1524	1,794.00

Industrial Snow Application Tires Options

72530514M	Front: 250/75 R16 Nokian Rear: 400/80 R24 Nokian	80C3814	4,488.00

BUCKET OPTIONS - Recommended with Loader Packages — GROUP 06

72533147ML	66-inch Skid Steer Bucket	15C475	228	559.00
72533148ML	72-inch Skid Steer Bucket	75C505	228	595.00

TRACTOR MANUALS - Required - Choose One — GROUP 07

72530547M	English Language Operator's Manual		In Base
72530548M	French Language Operator's Manual		No Charge

ACCESSORIES — GROUP 08

72533180M	Single LED Work Light Kit for all Platform Models (Available through Assembly Center)	50C127	150.00

See Accessories Chart - must be ordered separately from Tractor:

72533986M	Grille Guard for use on Tractor without Loader (for use on MF1700E/MF1700M/MF1700/2700E)	35C162	191.00
72533987M	Front Weight Bracket Kit (Requires Grille Guard 72533986M, holds up to 6 weights - only 1906066M91 Weights) (for use on MF1700E/MF1700M/MF1700/2700E)	50C110	130.00

SUBJECT TO AVAILABILITY

MASSEY FERGUSON®

RESERVED

COMPACT TRACTOR

MASSEY FERGUSON®

WHOLEGOODS

DEALER / FIELD INSTALLED ACCESSORIES

Please Order these Items through Dealer Central on a Separate Order from the Tractor Order.

CATALOG NUMBER	DESCRIPTION	GC1723E GC1725M GC1705* GC1715*	GC1723EB GC1725MB GC1710* GC1720*	FACTORY CODE	LIST PRICE
72533705M	Grille Guard without Loader	X		A15810	186.00
72533706M	Front Weight Bracket Kit (Requires Grille Guard)	X		A10540	124.00
72533783M	10-Inch Bucket with 2 Teeth		X	A31790	374.00
72533784M	12-Inch Bucket with 3 Teeth		X	A35785	421.00
72533785M	16-Inch Bucket with 3 Teeth		X	A39780	468.00
ACX2956890AC	Stabilizer Street Pads (16mm Bolts)		X	A12070	142.00
ACX2956900AC	Big Foot Stabilizer Pads (16mm Bolts)		X	A11220	132.00
72533792AC	Thumb Kit		X	A42415	499.00

CATALOG NUMBER	DESCRIPTION	1726E*	1735E* 1734E*	1740E* 1739E*	FACTORY CODE	LIST PRICE
72533986M	Grille Guard without Loader	X	X	X	A16235	191.00
72533987M	Front Weight Bracket Kit (Requires Grille Guard above)	X	X	X	A11050	130.00

CATALOG NUMBER	DESCRIPTION	1526	FACTORY CODE	LIST PRICE
72533929M	Direct Control Hydraulic Valve with Float, for Operation of the Lift/Lower and Curl/Dump Functions (Includes Hoses to Base Loader)	X	A60860	716.00
72533916M	54-inch Pin Type Material Bucket	X	A40375	475.00
72533918M	Bucket Quick Attach Tool Carrier Kit	X	A22865	269.00

CATALOG NUMBER	DESCRIPTION	2850E 2860E	FACTORY CODE	LIST PRICE
72533986M	Grille Guard for use on Tractor without Loader	X	A16235	191.00
72533987M	Front Weight Bracket Kit (Requires 72533986M Grille Guard)	X	A11050	130.00

*** Subject to Availability**

PARTS SUPPLIED

DEALER / FIELD INSTALLED ACCESSORIES

Consult your AGCO parts ordering system using oneAGCO Solutions-Online to determine current availability and pricing

CATALOG NUMBER	DESCRIPTION	GC1723E GC1725M GC1705* GC1715*	GC1723EB GC1725MB GC1710* GC1720*	FACTORY CODE	LIST PRICE
4330274M91	Block Heater Kit	X	X	Contact AGCO Parts Division	
7073007M91	Filter Guard	X	X	Contact AGCO Parts Division	
4269010A91	Plastic Sunshade - Gray	X	X	Contact AGCO Parts Division	
1906066M91	Front Weight (Maximum of 6) Requires 72533705M Grille Guard and 72533706M Front Weight Bracket Kit	X	X	Contact AGCO Parts Division	
79018800	70 lb Rear Weight, 1 per Side	X	X	Contact AGCO Parts Division	
79018851	Hardware Kit for 79018800, 1 per Side	X	X	Contact AGCO Parts Division	

CATALOG NUMBER	DESCRIPTION	1825E	1835E 1840E	1726E* 1734E* 1739E*	1735E*	1740E*	FACTORY CODE
7079270M91	1st Rear Remote Valve Kit Includes Valve and Lever Assemblies	X	X	X	X	X	Contact AGCO Parts Division
7079271M91	2nd Rear Remote Valve Kit Includes Valve & Lever Assemblies	X	X	X	X	X	Contact AGCO Parts Division
3605426M92	110v Block Heater Kit	X					Contact AGCO Parts Division
4330412M91	Block Heater			X	X	X	Contact AGCO Parts Division
4269010A91	Plastic Sunshade - Gray	X		X	X	X	Contact AGCO Parts Division
ACX2713760	English Operators Manual	X					Contact www.agcopubs.com
ACX2713770	French Operators Manual	X					
ACX2713780	Spanish Operators Manual	X					
ACX2733690	English Operators Manual		X				
ACX2733700	French Operators Manual		X				
ACX2733710	Spanish Operators Manual		X				
ACW7693080	English Operators Manual				X	X	
ACW7693100	French Operators Manual				X	X	
ACW7693130	Spanish Operators Manual				X	X	

***Subject to Availability**

PARTS SUPPLIED

DEALER / FIELD INSTALLED ACCESSORIES

Consult your AGCO parts ordering system using oneAGCO Solutions-Online to determine current availability and pricing

CATALOG NUMBER	DESCRIPTION	1526	FACTORY CODE	LIST PRICE
4269010A91	Plastic Sunshade (Gray)	X	Contact AGCO Parts Division	
3605426M92	Engine Coolant Heater, Installed in Freeze Plug Hole in Block	X	Contact AGCO Parts Division	
6256596M92	Mid PTO Kit - 1529 After S/N JUH24002, 1532 After S/N JUH54103		Contact AGCO Parts Division	
6253639M94	Mid PTO Kit - 1529 Prior to S/N JUH24002, 1532 Prior to S/N JUH54103		Contact AGCO Parts Division	
6253417M97	Single Spool Valve (3/8" Coupler Included in Kit)		Contact AGCO Parts Division	
6253425M95	Second Spool Valve (3/8" Couplers Included in Kit) Requires Single Spool Valve		Contact AGCO Parts Division	
6258119M93	Mid PTO Kit	X	Contact AGCO Parts Division	
4330263M94	Single Spool, Rear Remote Hydraulic Valve	X	Contact AGCO Parts Division	
4267666M91	7-Pin Trailer Plug Harness (Only Harness)	X	Contact AGCO Parts Division	
3709654M2	Front Bumper (Requires Qty 4 of each Hardware: 391958X1 Bolt 339369X1 Washer 3009695X1 Nut	X	Contact AGCO Parts Division	

PARTS SUPPLIED

DEALER / FIELD INSTALLED ACCESSORIES

Consult your AGCO parts ordering system using oneAGCO Solutions-Online to determine current availability and pricing

CATALOG NUMBER	DESCRIPTION	2850E 2860E	FACTORY CODE
7079252M91	Rear Remote Valve (one Valve Body)	X	Contact AGCO Parts Division
7071420M93	1st Position Rear Hydraulic Remote Valve Kit (Requires one 7079252M91)	X	Contact AGCO Parts Division
7071421M93	2nd Position Rear Hydraulic Remote Valve Kit (Requires one 7079252M91)	X	Contact AGCO Parts Division
7071422M92	3rd Position Rear Hydraulic Remote Valve Kit (Requires one 7079252M91)	X	Contact AGCO Parts Division
ACX3270520	Block Heater Kit, Thermal Siphon	X	Contact AGCO Parts Division
6241637M91	Power Beyond Plug	X	Contact AGCO Parts Division
4269010A91	Plastic Sunshade (Gray)	X	Contact AGCO Parts Division
7071496M92	Light Guard	X	Contact AGCO Parts Division
3703981M1	Drawbar Clevis - Hardware Required: Qty 2 of each 3702217M1 - Hex Head Bolt, 339377X1 - Lock Washer M16, 3702850M1 - Hex Nut; Drawbar Pin Qty 1 of each: 3703982M1 - Pin, 3703983M1 - Washer, 3607391M4 - Link Pin	X	Contact AGCO Parts Division
6241534M4	Front Bumper / Weight Bracket (without Grille Guard), Hardware Required: Qty 4 of each 3704886M1 - Hex Head Bolt M14 x 4, 3004970X1 - Lock Washer M14, 3704914M1 - Hex Nut M14	X	Contact AGCO Parts Division
72530329	Category 1 Quick Hitch Note: Implement May Require Adapter Bushings (Not all 3- Point Implements are Compatible with Quick Hitch)	X	Contact AGCO Parts Division
79018831	Rear Wheel Weights 105 lbs each, for R1 and R4 Tires on all Models (excludes 15x19.5 tire option) Weights are Stackable	X	Contact AGCO Parts Division
79018838	Rear Wheel Weights 146 lbs each, for 13.6-28 R1 and 44x18.00-20 Rear R3 Turf Tires. Weights are Stackable	X	Contact AGCO Parts Division
79023042	Category I Quick Hitch	X	Contact AGCO Parts Division
ACX2891970	English Operators Manual	X	Contact www.agcopubs.com
ACX2891980	French Operators Manual	X	Contact www.agcopubs.com

For the most recent product information, always reference the Sale Engineering Documents on www.OneAGCO.com

COMPACT TRACTOR

MASSEY FERGUSON®

PARTS SUPPLIED

DEALER / FIELD INSTALLED ACCESSORIES

Consult your AGCO parts ordering system using oneAGCO Solutions-Online to determine current availability and pricing

CATALOG NUMBER	DESCRIPTION	1835M 1735M*	1840M 1740M*	2850M 1750M*	2855M 1755M*	2860M 1760M* HST	2860M 1760M* Mech	FACTORY CODE
6255415M99	Rear Remote Valve (One Valve Slice) Required for each Lever Kit	X	X	X	X	X	X	Contact AGCO Parts Division
7079540M91	1st Lever Kit Requires one of 6255415M99 (Standard on Cab)	X	X	X	X	X		Contact AGCO Parts Division
7079541M91	2nd Lever Kit Requires 1st Auxiliary Valve to be Installed (Requires one 6255415M99)	X	X	X	X	X		Contact AGCO Parts Division
7079541M91	3rd Lever Kit - Requires 2nd Auxiliary Valve to be Installed (Requires one 6255415M99) Not Compatible with Backhoe Coupler Mounting	X	X	X	X	X		Contact AGCO Parts Division
7079678M91	1st Lever Kit - Requires one of 6255415M99 (Standard on Cab)						X	Contact AGCO Parts Division
7079541M91	2nd Lever Kit Requires two of 6255415M99						X	Contact AGCO Parts Division
7069242M91	Mid PTO Kit (25 mm Diameter Shaft)	X	X					Contact AGCO Parts Division
7069243M91	Mid PTO Kit (35 mm Diameter Shaft) **Front-Mounted Implements only, not Compatible w/Mid-Mount Mower**			X	X	X		Contact AGCO Parts Division
7069238M91	Mid PTO Kit (35 mm Diameter Shaft)						X	Contact AGCO Parts Division
7075324M91	Draft Control Kit for Cab Tractors	X	X					Contact AGCO Parts Division
7075453M91	Draft Control Kit for Cab Tractors (Standard for **2860M Mech**)			X	X	X	X	Contact AGCO Parts Division
7067595M91	Draft Control Kit for Platform Tractors (Standard **2860M Mech**)	X	X	X	X	X	X	Contact AGCO Parts Division
3705066M1	Lower Link Cat 2 to Cat 1 Bushing						X	Contact AGCO Parts Division
6252045M1	Upper Link Cat 2 to Cat 1 Bushing						X	Contact AGCO Parts Division
79023042V	Category 1 Quick Hitch - Implement May Require Adapter Bushings (Not all 3- Point Implements are Compatible)	X	X	X	X	X	X	Contact AGCO Parts Division
4378783M2	Radio for **MF1835M/1840M and 2800M** Standard Cab Only	X	X	X	X		X	Contact AGCO Parts Division

***Subject to Availability**

MASSEY FERGUSON®

COMPACT TRACTOR

PARTS SUPPLIED

DEALER / FIELD INSTALLED ACCESSORIES

Consult your AGCO parts ordering system using oneAGCO Solutions-Online to determine current availability and pricing

CATALOG NUMBER	DESCRIPTION	1835M 1735M*	1840M 1740M*	2850M 1750M*	2855M 1755M*	2860M 1760M* HST	2860M 1760M* Mech	FACTORY CODE
7072898M91	Mirror for **MF1835M/1840M and 2800M** Standard Cab Only (Not Compatible with Sunshade)	X	X	X	X		X	Contact AGCO Parts Division
6241534M4	Front Bumper - Not Compatible with ALO Grille Guard, Not Compatible with Weight	X	X	X	X	X	X	Contact AGCO Parts Division
6241637M91	Power Beyond Plug	X	X	X	X	X	X	Contact AGCO Parts Division
4330412M91	Block Heater **(Excludes 1835M/1840M, 2800M)**	X	X	X	X	X	X	Contact AGCO Parts Division
ACX3270520	Block Heater Kit - Thermal Siphon **(Excludes 1700M Series)**	X	X	X	X	X	X	Contact AGCO Parts Division
ACX3569430	110V Block Heater Kit - (Iseki 3 cyl E3FH & 4 cyl E4FH) **(Excludes 1700M Series)**	X	X	X	X	X	X	Contact AGCO Parts Division
4269010A91	Plastic Sunshade - Gray for Platform Tractors	X	X	X	X	X	X	Contact AGCO Parts Division
7076440M91	7 Pin Trailer Plug	X	X	X	X	X	X	Contact AGCO Parts Division
7069115M91	Single Rear Work Light for Platform Tractors	X	X	X	X		X	Contact AGCO Parts Division
1906066M91	25 lb Front Weights, Max of 6, Requires Front Weight Carrier 72533987M NOTE: Included w/Assembly Center Installed Loader Pkgs	X	X	X	X	X	X	Contact AGCO Parts Division
79018826	Rear Wheel Weights, 61 lbs ea, for 15x19.5 Tire	X	X	X	X	X	X	Contact AGCO Parts Division
79018829	Rear Wheel Weights, 75 lbs ea, for 41x14.00-20 Turf Tire	X	X	X	X	X	X	Contact AGCO Parts Division
79018831	Rear Wheel Weights, Stackable 105 lbs each, for R1 & R4 Tires on all Models (Excludes 15x19.5 Tire and 41x14.00-20 Turf Tire Options)	X	X	X	X	X	X	Contact AGCO Parts Division
ACW4980080	French Operators Manual	X	X	X	X	X	X	www.agcopubs.com
ACX2872430	French Operators Manual **MF1835M and 1840M Only**	X	X					www.agcopubs.com
ACX2872460	French Operators Manual **MF2800M Series Only**			X	X	X	X	www.agcopubs.com

***Subject to Availability**

COMPACT TRACTOR TIRES

WHOLEGOODS

DEALER / FIELD INSTALLED ACCESSORIES

Please Order these Items through Dealer Central on a Separate Order from the Tractor Order.

CATALOG NUMBER	DESCRIPTION	TRACTOR MODEL	FAC-TORY CODE	LIST PRICE
72530700AM	Front: 18 x 8.50-10 / Rear: 26 x 12.00-12 AG	**GC1700**	75C675	795.00
72530701AM	Front: 18 x 8.5-10 / Rear: 26 x 12.00-12 Turf	**GC1700**	55C614	723.00
72530702AM	Front: 18 x 8.5-10 / Rear: 26 x 12.00-12 Industrial	**GC1700**	60C727	856.00
72530371AM	Front: 25x8.50-14 4PR M-T / Rear: 36x13.50-15 4PR M-T **Subject to Availability**	**MF1526**	80C1264	1,488.00
72530614AM	Front: 25x8.50-14 6PR / Rear: 14-17 NHS 6P R4 - Industrial **Subject to Availability**	**MF1526**	65C1622	1,909.00
72530609AM	Front: 7-16 6P R1 / Rear: 11.2 x 24 6P R1 Adjustable - AG **Subject to Availability**	**MF1700E/1800E**	35C1760	2,071.00
72530615AM	Front: 27 x 8.50-15 6P / Rear: 15 x 19.5 6P - Industrial - **Subject to Availability**	**MF1700E/1800E**	95C1824	2,147.00
7140701AM	Front: 8-16 6PR R1 HTL / Rear: 13.6 x 24 6PR R1 HTL Adjustable - AG **Subject to Availability**	**MF1835M/1735M MF1840M/1740M**	65C2149	2,529.00
72530620AM	Front: 27 x 8.50-15 NHS 6P / Rear: 41 x 14.00-20 NHS 4P - Turf **Subject to Availability**	**MF1835M/1735M MF1840M/1740M**	50C1606	1,890.00
72530616AM	Front: 25 x 8.5-14 NHS 6P / Rear: 15-19.5 6P R4 - Industrial **Subject to Availability**	**MF1835M/1735M MF1840M/1740M**	90C1779	2,094.00
72530699AM	Front: 10-16.5 NHS 6P / Rear: 14.9-24 6P R4 - Industria l **Subject to Availability**	**MF1835M/1735M MF1840M/1740M MF2850M/1750M MF2855M/1755M MF2860M/1760M HST**	05C2153	2,533.00
72530618AM	Front: 10-16.5 NHS 6P / Rear: 17.5L-24 6P R4 - Industrial **Subject to Availability**	**MF1835M/1735M MF1840M/1740M MF2850M/1750M MF2855M/1755M MF2860M/1760M HST**	80C2369	2,788.00
72530611AM	Front: 9.5-16 6P R1 / Rear: 13.6-28 6P R1 - AG **Subject to Availability**	**MF2850M/1750M MF2855M/1755M MF2860M/1760M HST**	10C2283	2,686.00
72530612AM	Front: 9.5-16 6P R1 / Rear: 16.9-24 6P R1 - AG **Subject to Availability**	**MF2850M/1750M MF2855M/1755M MF2860M/1760M HST**	95C2317	2,727.00
72530621AM	Front: 27 x 10.50-15 NHS 4P / Rear: 44 x 18.00-20 NHS 4P - Turf **Subject to Availability**	**MF2850M/1750M MF2855M/1755M MF2860M/1760M**	30C2361	2,778.00
72530619AM	Front: 12-16.5 NHS 6P R4 / Rear: 18.4-24 8P R4 - Industrial **Subject to Availability**	**MF2860M/1760M Mech**	30C2820	3,318.00
72530514AM	Front: 250/75R16 (Nokian) / Rear: 400/80R24 (Nokian) **Subject to Availability**	**MF1835M/1735M MF1840M/1740M**	85C4386	5,161.00
72530516AM	Front: 250/80R16 (Nokian) / Rear: 400/80R28 (Nokian) Subject to Availability	**MF2860M/1760M Mech**	60C4586	5,396.00
72530537AM	Front: 250/80R16 (Nokian) / Rear: 360/80R28 (Nokian) **Subject to Availability**	**MF2850M/1750M MF2855M/1755M MF2860M/1760M HST MF2860M/1760M Mech**	85C4386	5,161.00

UTILITY TRACTOR TIRES

MASSEY FERGUSON®

WHOLEGOODS

DEALER / FIELD INSTALLED ACCESSORIES

Please Order these Items through Dealer Central on a Separate Order from the Tractor Order.

CATALOG NUMBER	DESCRIPTION	FACTORY CODE	LIST PRICE
72530611AM	Front: 9.5-16 6P R1 / Rear: 13.6-28 6P R1 - AG - **Subject to Availability**	10C2283	2,686.00
72530612AM	Front: 9.5-16 6P R1 / Rear: 16.9-24 6P R1 - AG - **Subject to Availability**	95C2317	2,727.00
72530618AM	Front: 10-16.5 NHS 6P / Rear: 17.5L-24 6P R4 - Industrial - **Subject to Availability**	80C2369	2,788.00
72530621AM	Front: 27 x 10.50-15 NHS 4P / Rear: 44 x 18.00-20 NHS 4P - Turf **Subject to Availability**	30C2361	2,778.00
72530420AM	Front: 9.5L-15 / Rear: 16.9-30 R1	15C3399	3,999.00
72530421AM	Front: 7.50-18 / Rear: 16.9-30 R1	65C3407	4,009.00
72530414AM	Front: 11.2-24 / Rear: 16.9-30 R1	85C4539	5,341.00
72530417AM	Front: 12.5/80-18 / Rear: 19.5L-24 R4	70C5050	5,942.00

Model	72530611AM 72530612AM 72530618AM 72530621AM	72530420AM	72530421AM	72530414AM 72530417AM
MF2750E **MF2760E** **MF2705E** **MF2706E**	X			
MF4607M		X	X	X

MASSEY FERGUSON®

MF 2700E Series
Utility Tractors

MF 2750E

MASSEY FERGUSON®

(F.O.B. Port of Entry)

FEATURES

POWER TRAIN

- Engine:
  48.8 Rated Engine HP Shibaura 4-Cylinder liquid cooled Diesel, 2.21 L Direct Injection, Turbocharged, Electronic Engine Control
  41.4 PTO HP @ 2600 RPM - 8x8
  39.0 PTO HP @ 2600 RPM - Hydrostatic
  Emission Standard Category: Tier 4 Final CARB and EPA Certified
- Dual Element Dry Type Air Cleaner
- Transmission:
  - 8F/8R Synchro Shuttle with 2 Synchronized Gears (3rd and 4th) and 2 Ranges
  - Servo-Assist Electronic Hydrostatic Transmission with 3 Ranges and Cruise Control
- 4WD Front Axle with Center Drive Line and Bevel-gear Final Drives
- Sealed Wet Disc Brakes
- Pedal Operated Differential Lock
- PTO:
  Rear - 540 RPM Independent Electro Hydraulic

HYDRAULIC SYSTEM

- 3-Point Hitch Cat. I and II with Position Control Standard, Draft Control Optional
- Lift Capacity @ 24 inches - 2,425 lb (1100 kg)
- Telescopic Stabilizers
- Telescopic Draft Link Ends with Cat I and Cat II Cross Drilled Ball Ends
- Flow at Remotes 12.6 GPM (47.8 LPM)
- Hydrostatic Power Steering

ELECTRICAL

- 12-Volt DC System
- 90 Amp Alternator

INSTRUMENTS

- Combination Digital and Analog Front Dash Display
- Tachometer and Hour Meter
- Temperature Warning Light
- RPM, Fuel and Hour Meter Gauges
- Warning Lights: High Beam Indicator, Engine Oil Pressure, PTO Engagement, Battery Charge (alt) Indicator, Glow Plug Indicator and Flasher Indicators
- Key Operated Electronic Fuel Shutoff and Glow Plug Control

OTHER STANDARD FEATURES

- ISO Mounted Flat Platform
- One Piece Tilt-up Hood
- 2 Post Folding ROPS
- Mechanical Suspension Seat with Seat Belt
- Turn Signals, Flashers, Tail Lights and SMV Emblem
- 2 Headlights
- Tool Box

NOTES:

- ***Specifications are Manufacturers estimates at time of publication and are subject to change without prior notification.***
- ***3-Point Backhoe Installation Voids Warranty***

IMPLEMENT FEATURES

MF FLX2815 PIN TYPE STYLE LOADER

- One Piece Main Frame with Tapered Arms and Single Cross Member
- Quick Attach Loader Frame Mount with Pin Lock
- Built-in Parking Stands
- (2) 2.76 inch Double Acting Lift Cylinders
- (2) 2.56 inch Double Acting Bucket Cylinders
- Hydraulic Valves with Integrated Joystick Mount to Right Side Loader Subframe
- Hydraulic Lines Routed Inside Main Frame for Protection and Visibility
- Galvanized Steel Bushings with Recessed Grease Points
- 72-inch Standard Duty Skid Steer Bucket
- Grille Guard Standard
- Fits MF2750E, MF2760E, MF2705E, MF2706E Series Tractor Models
- Maximum Lift Height: 111 Inches @ Pivot Pin
- Lift Capacity to Full Height @ Pivot Pin: 2,810 lbs
- Breakout Force: 4,240 lbs @ Pivot Pin
- Rated Hydraulic Pressure: 2350 PSI

MF 2750E

MASSEY FERGUSON®

Order Code	Catalog Number	Description	Factory Code	Approx. Weight	List Price

ORDER TRACTOR THEN ORDER ONE CODE FROM GROUP 02 THROUGH 07 AS REQUIRED

BASE MACHINE — GROUP 01

MF2750E		**MF2750E Synchro Shuttle Tractor**		
S-RE3	72530601	4WD Platform Synchro Shuttle 8x8	95C19793	23,287.00
S-V-RE3	72530602	4WD Platform Synchro Shuttle 8x8 with 1 Rear Hydraulic Remote	90C20496	24,114.00
MF2750EH		**MF2750E Hydrostatic Base Tractor**		
H-V-RE3	72530600	4WD Platform HST with 1 Rear Hydraulic Remote	15C22014	25,899.00

LOADER — GROUP 02

	72533099	MF FLx2815 Pin Type Style Loader Package Includes: Mounting Kit, Grille Guard, and Valve Kit with Hoses	05C3734	4,393.00

Note: For Additional Loader Options, Refer to Implements Price List Revision

***ALL Tractors will be charged $325 for Assembly**

HYDRAULIC OPTIONS — GROUP 03

	72530491ML	2nd Auxiliary Valve/Lever Package (Requires 1st Valve to be Installed) (Shipped/Invoiced with Tractor, Dealer Installation Required)	50C637	750.00

TIRES & WHEELS - Required — GROUP 04

NOTE: See Dealer / Field Installed Accessories for list of Tires & Wheels available as Loose Accessory orders. Tire and wheel options ordered with the tractor and not subject to availability can be returned via RGA. Contact Dealer Central with questions.

		AG Tires Options		
	72530611M	Rear: 13.6-28 6P R1 4wd AG Front: 9.5-16 6P R1 4wd AG	10C2028	2,386.00
	72530612M	Rear: 16.9-24 6P R1 4wd AG Front: 9.5-16 6P R1 4wd AG	95C2062	2,427.00
		Turf Tires Options		
	72530621M	Rear: 44x18.00-20 4P 4wd Turf Front: 27x10.50-15 NHS 4P 4wd Turf	30C2106	2,478.00
		Industrial Tires Options		
	72530618M	Rear: 17.5L-24 6P R4 4wd Industrial Front: 10-16.5 NHS 6P 4wd Industrial	80C2114	2,488.00

SUBJECT TO AVAILABILITY

Order Code	Catalog Number	Description	Factory Code	Approx. Weight	List Price
BUCKET OPTIONS - Recommended with Loader Packages					**GROUP 05**
	72533148ML	72-inch Skid Steer Material Bucket (Requires 72530671ML)	75C505	228	595.00
	72533149ML	72-inch High Volume Skid Steer Material Bucket Pre-Drilled to Accept a Bolt-on Cutting Edge (Requires 72530671ML)	15C866	345	1,019.00
	72530648ML	72-inch Pin Type Material Bucket	00C476		560.00
ACCESSORIES - OPTIONAL					**GROUP 06**
	72530671ML	Skid Steer Type Bucket Quick Attach Tool Carrier Kit (Required for 72533148ML/149ML Bucket on MFFLx2815 Loader)	25C480		565.00
LOADER MANUALS - Required with MF FLx2815 Loader Package					**GROUP 07**
	72530698	English Language Loader Operator Manual			No Charge
	72530697	French Language Loader Operator Manual			No Charge
TRACTOR MANUALS - Required					**GROUP 08**
	72530607M	English Language Operator Manual			No Charge
	72530608M	French Language Operator Manual			No Charge
See Accessories Chart - must be ordered separately from Tractor					
	72533986M	Grille Guard for use on Tractor without Loader (for use on MF1700E/MF1700/2700E)	35C162		191.00
	72533987M	Front Weight Bracket Kit (Requires Grille Guard 72533986M) (for use on MF1700E/MF1700/2700E)	50C110		130.00

SUBJECT TO AVAILABILITY

MF 2760E

(F.O.B. Port of Entry)

MASSEY FERGUSON®

FEATURES

POWER TRAIN

- Engine:
  57.3 Rated Engine HP Shibaura 4-Cylinder liquid cooled Diesel, 2.21 L Direct Injection, Turbocharged and Intercooled, Electronic Engine Control
  48.7 PTO HP @ 2600 RPM - 8x8
  45.9 PTO HP @ 2600 RPM - Hydrostatic
  Emission Standard Category: Tier 4 Final CARB and EPA Certified
- Dual Element Dry Type Air Cleaner
- Transmission:
  - 8F/8R Synchro Shuttle with 2 Synchronized Gears (3rd and 4th) and 2 Ranges
  - Servo-Assist Electronic Hydrostatic Transmission with 3 Ranges and Cruise Control
- 4WD Front Axle with Center Drive Line and Bevel-gear Final Drives
- Sealed Wet Disc Brakes
- Pedal Operated Differential Lock
- PTO:
  Rear - 540 RPM Independent Electro Hydraulic

HYDRAULIC SYSTEM

- 3-point Hitch Cat. I and II with Position Control Standard, Draft Control Optional
- Lift Capacity @ 24 inches - 2,425 lb (1100 kg)
- Telescopic Stabilizers
- Telescopic Draft Link Ends with Cat I and Cat II Cross Drilled Ball Ends
- Flow at Remotes 12.6 GPM (47.8 LPM)
- Hydrostatic Power Steering

ELECTRICAL

- 12-Volt DC System
- 90 Amp Alternator

INSTRUMENTS

- Combination Digital and Analog Front Dash Display
- Tachometer and Hour Meter
- Temperature Warning Light
- RPM, Fuel and Hour Meter Gauges
- Warning Lights: High Beam Indicator, Engine Oil Pressure, PTO Engagement, Battery Charge (alt) Indicator, Glow Plug Indicator and Flasher Indicators
- Key Operated Electronic Fuel Shutoff and Glow Plug Control

OTHER STANDARD FEATURES

- ISO Mounted Flat Platform
- One Piece Tilt-up Hood
- 2 Post Folding ROPS
- Mechanical Suspension Seat with Seat Belt
- Turn Signals, Flashers, Tail Lights and SMV Emblem
- 2 Headlights
- Tool Box

NOTES:

- ***Specifications are Manufacturers estimates at time of publication and are subject to change without prior notification.***
- ***3-Point Backhoe Installation Voids Warranty***

IMPLEMENT FEATURES

MF FLX2815 PIN TYPE STYLE LOADER

- One Piece Main Frame with Tapered Arms and Single Cross Member
- Quick Attach Loader Frame Mount with Pin Lock
- Built-in Parking Stands
- (2) 2.76 inch Double Acting Lift Cylinders
- (2) 2.56 inch Double Acting Bucket Cylinders
- Hydraulic Valves with Integrated Joystick Mount to Right Side Loader Subframe
- Hydraulic Lines Routed Inside Main Frame for Protection and Visibility
- Galvanized Steel Bushings with Recessed Grease Points
- 72-inch Standard Duty Skid Steer Bucket
- Grille Guard Standard
- Fits MF2750E, MF2760E, MF2705E, MF2706E Series Tractor Models
- Maximum Lift Height: 111 Inches @ Pivot Pin
- Lift Capacity to Full Height @ Pivot Pin: 2,810 lbs
- Breakout Force: 4,240 lbs @ Pivot Pin
- Rated Hydraulic Pressure: 2350 PSI

MF 2760E

MASSEY FERGUSON®

Order Code	Catalog Number	Description	Factory Code	Approx. Weight	List Price
ORDER TRACTOR THEN ORDER ONE CODE FROM GROUP 02 THROUGH 07 AS REQUIRED					
BASE MACHINE					**GROUP 01**
MF2760E		**MF2760E Synchro Shuttle Tractor**			
S-RE3	72530605	4wd Platform Synchro Shuttle 8x8	00C21624		25,440.00
S-V-RE3	72530606	4wd Platform Synchro Shuttle 8x8 with 1 Rear Hydraulic Remote	10C22326		26,266.00
MF2760EH		**MF2760E Hydrostatic Base Tractor**			
H-V-RE3	72530604	4wd Platform HST with 1 Rear Hydraulic Remote	55C23513		27,663.00
LOADER					**GROUP 02**
	72533099	MF FLx2815 Pin Type Style Loader Package Includes: Mounting Kit, Grille Guard, and Valve Kit with Hoses	05C3734		4,393.00

Note: For Additional Loader Options, Refer to Implements Price List Revision

***ALL Tractors will be charged $325 for Assembly**

HYDRAULIC OPTIONS					**GROUP 03**
	72530491ML	2nd Auxiliary Valve/Lever Package (Requires 1st Valve to be Installed) (Shipped/Invoiced with Tractor, Dealer Installation Required)	50C637		750.00
TIRES & WHEELS - Required					**GROUP 04**

NOTE: See Dealer / Field Installed Accessories for list of Tires & Wheels available as Loose Accessory orders. Tire and wheel options ordered with the tractor and not subject to availability can be returned via RGA. Contact Dealer Central with questions.

		AG Tires Options		
	72530611M	Rear: 13.6-28 6P R1 4wd AG Front: 9.5-16 6P R1 4wd AG	10C2028	2,386.00
	72530612M	Rear: 16.9-24 6P R1 4wd AG Front: 9.5-16 6P R1 4wd AG	95C2062	2,427.00
		Turf Tires Options		
	72530621M	Rear: 44x18.00-20 4P 4wd Turf Front: 27x10.50-15 NHS 4P 4wd Turf	30C2106	2,478.00
		Industrial Tires Options		
	72530618M	Rear: 17.5L-24 6P R4 4wd Industrial Front: 10-16.5 NHS 6P 4wd Industrial	80C2114	2,488.00

SUBJECT TO AVAILABILITY

MASSEY FERGUSON®

Order Code	Catalog Number	Description	Factory Code	Approx. Weight	List Price
BUCKET OPTIONS - Recommended with Loader Packages					**GROUP 05**
	72533148ML	72-inch Skid Steer Material Bucket (Requires 72530671ML)	75C505	228	595.00
	72533149ML	72-inch High Volume Skid Steer Material Bucket Pre-Drilled to Accept a Bolt-on Cutting Edge (Requires 72530671ML)	15C866	345	1,019.00
	72530648ML	72-inch Pin Type Material Bucket	00C476		560.00
ACCESSORIES - OPTIONAL					**GROUP 06**
	72530671ML	Skid Steer Type Bucket Quick Attach Tool Carrier Kit (Required for 72533148ML/149ML Bucket on MFFLx2815 Loader)	25C480		565.00
LOADER MANUALS - Required with MF FLx2815 Loader Package					**GROUP 07**
	72530698	English Language Loader Operator Manual			No Charge
	72530697	French Language Loader Operator Manual			No Charge
TRACTOR MANUALS - Required					**GROUP 08**
	72530607M	English Language Loader Operator Manual			No Charge
	72530608M	French Language Loader Operator Manual			No Charge
See Accessories Chart - must be ordered separately from Tractor					
	72533986M	Grille Guard for use on Tractor without Loader (for use on MF1700E/MF1700/2700E)	35C162		191.00
	72533987M	Front Weight Bracket Kit (Requires Grille Guard 72533986M) (for use on MF1700E/MF1700/2700E)	50C110		130.00

SUBJECT TO AVAILABILITY

UTILITY TRACTOR

MASSEY FERGUSON®

WHOLEGOODS

DEALER / FIELD INSTALLED ACCESSORIES

Please Order these Items through Dealer Central on a Separate Order from the Tractor Order.

CATALOG NUMBER	DESCRIPTION	2750E* 2760E*	FACTORY CODE	LIST PRICE
72533986M	Grille Guard for use on Tractor without Loader	X	A16235	191.00
72533987M	Front Weight Bracket Kit (Requires 72533986M Grille Guard)	X	A11050	130.00

*** Subject to Availability**

For the most recent product information, always reference the Sale Engineering Documents on www.OneAGCO.com

UTILITY TRACTOR

MASSEY FERGUSON®

PARTS SUPPLIED

DEALER / FIELD INSTALLED ACCESSORIES

Consult your AGCO parts ordering system using oneAGCO Solutions-Online to determine current availability and pricing

CATALOG NUMBER	DESCRIPTION	2750E* 2760E*	FACTORY CODE
7071419M93	Rear Remote Valve (one Valve Body)	X	Contact AGCO Parts Division
7071420M93	1st Position Rear Hydraulic Remote Valve Kit (Requires one 7071419M93)	X	Contact AGCO Parts Division
7071421M93	2nd Position Rear Hydraulic Remote Valve Kit (Requires one 7071419M93)	X	Contact AGCO Parts Division
7071422M92	3rd Position Rear Hydraulic Remote Valve Kit (Requires one 7071419M93)	X	Contact AGCO Parts Division
7071401M91	Draft Control Kit	X	Contact AGCO Parts Division
4330412M91	Block Heater	X	Contact AGCO Parts Division
6241637M91	Power Beyond Plug	X	Contact AGCO Parts Division
4269010A91	Plastic Sunshade (Gray)	X	Contact AGCO Parts Division
7071496M91	Light Guard	X	Contact AGCO Parts Division
3703981M1	Drawbar Clevis - Hardware Required: Qty 2 of each 3702217M1 - Hex Head Bolt, 339377X1 - Lock Washer M16, 3702850M1 - Hex Nut; Drawbar Pin Qty 1 of each: 3703982M1 - Pin, 3703983M1 - Washer, 3607391M4 - Link Pin	X	Contact AGCO Parts Division
6241534M2	Front Bumper / Weight Bracket (without Grille Guard), Hardware Required: Qty 4 of each 3704886M1 - Hex Head Bolt M14 x 4, 3004970X1 - Lock Washer M14, 3704914M1 - Hex Nut M14	X	Contact AGCO Parts Division
72530329	Category 1 Quick Hitch Note: Implement May Require Adapter Bushings (Not all 3- Point Implements are Compatible with Quick Hitch)	X	Contact AGCO Parts Division
3705066M1	Lower Link Cat II to Cat I Bushing (for Links that do not have both Cat I and Cat II Provisions)	X	Contact AGCO Parts Division
6252045M1	Upper Link Cat II to Cat I Bushing	X	Contact AGCO Parts Division
79018831	Rear Wheel Weights 105 lbs each, for R1 and R4 Tires on all Models (excludes 15x19.5 tire option) Weights are Stackable	X	Contact AGCO Parts Division
79018838	Rear Wheel Weights 146 lbs each, for 13.6-28 R1 and 44x18.00-20 Rear R3 Turf Tires. Weights are Stackable	X	Contact AGCO Parts Division
ACW7693390	French Operators Manual	X	Contact AGCO Parts Division

*** Subject to Availability**

For the most recent product information, always reference the Sale Engineering Documents on www.OneAGCO.com

MASSEY FERGUSON®

RESERVED

MASSEY FERGUSON®

2600H Series
UTILITY

MASSEY FERGUSON®

MF2604H

(F.O.B. PORT OF ENTRY)

TRACTOR FEATURES

ENGINE SYSTEM
- Simpson 2.6L, T4 Final, EPA & CARB Certified
- 3 Cylinder
- Turbocharged, Intercooled, HPCR Fuel Injection
- 45 (33 kW) PS Gross Engine Horsepower @ 2000 RPM
- 38 (30.14 kW) PTO Horsepower @ 2000 RPM with Live PTO

FRONT AXLE - Two Factory Options
- 2 Wheel Drive with Telescopic Adjustment
  OR
- 4 Wheel Drive with Direct Drive Final Drives

POWER TRAIN
- Transmission - 8x2 Sideshift - Sliding Gear Transmission Shift Control Lever on Right Side and Range Box Shift Control Lever on Left Side
- Rear Axle - Bevel Gear, Single Reduction Type
- Brakes - Independent Drum Type (Dry) with Mechanical Actuation
- Parking Brake - Mechanical Hand Lever

PTO
- Live, 540 RPM, 6 Spline shaft with Dual Stage Dry Clutch

THREE POINT LINKAGE
- Fixed Lower Links with Dual Turnbuckle Adjustment -Category I/II Cross Drilled Ball Ends
- Sway Chain Stabilizers

HYDRAULICS
- Hydrostatic Steering with Separate Reservoir
- Ferguson 3-Point Hitch System
- 3-Point Hitch Pump Flow (4.2 GPM) *
- Draft, Position and Response Control
- Single Spool Valve Included
- Hydraulic Pump Flow 10.6 GPM at Rear Remote *
- Maximum Hydraulic Flow 15.7 GPM (59.5 LPM) (Steering, 3-Point and Auxiliary Combined)

ELECTRICAL
- Headlights
- Single Rear Work Light
- Safety Lights
- 7 Pin ASAE Outlet

OPERATORS ENVIRONMENT
- Straddle Mount
- Grammar Seat that Inclines as it Moves Rearward
- Retractable Seatbelt
- Folding ROPS
- Suspended Foot Pedals
- Ground-Level Fuel Tank

OTHER STANDARD FEATURES
- Tilting One Piece Hood
- Swinging Drawbar
- Tool Box
- Drawbar Clevis

*** Manufacturer's Estimate**

LOADER FEATURES

MF FLx2815 Pin Type Style Loader
- One Piece Main Frame with Tapered Arms and Single Cross Member
- Quick Attach Loader Frame Mount with Pin Lock
- Built-in Parking Stands
- (2) 2.76 inch Double Acting Lift Cylinders
- (2) 2.56 inch Double Acting Bucket Cylinders
- Hydraulic Valves with Integrated Joystick Mount to Right Side Loader Subframe
- Hydraulic Lines Routed Inside Main Frame for Protection and Visibility
- Galvanized Steel Bushings with Recessed Grease Points
- 72-inch Standard Duty Skid Steer Bucket
- **Fits all MF2600H Series 2wd Tractors**
- Maximum Lift Height: 111 Inches at Pivot Pin
- Lift Capacity to Full Height at Pivot Pin: 2,810 lbs
- Breakout Force: 4,240 lbs at Pivot Pin
- Rated Hydraulic Pressure: 2350 PSI
- Grille Guard Standard

MF911X Loader
- One Piece Main Frame with Tapered Arms and Single Cross Member
- Quick Attach Loader Frame Mount with Pin Lock
- Built-in Parking Stands
- (2) 2.4 inch Double Acting Lift Cylinders
- (2) 2.4 inch Double Acting Bucket Cylinders
- Hydraulic Valves with Integrated Joystick Mount to Right Side Loader Subframe
- Hydraulic Lines Routed Inside Main Frame for Protection and Visibility
- Galvanized Steel Bushings with Recessed Grease Points
- Universal Skid Steer or Euro Hook Type Implement Attachments
- **Fits all MF2600H Series 4wd Tractors**
- Maximum Lift Height: 115 inches at Pivot
- Lift Capacity to Full Height at 31.5 inches Forward of Pivot Pin: 1510 lbs
- Breakout Force: 2750 lbs
- Rated Hydraulic Pressure: 2755 PS
- Grille Guard Standard

MF2604H

(F.O.B. PORT OF ENTRY)

MASSEY FERGUSON®

Order Code	Catalog Number	Description	Factory Code		List Price
		ORDER TRACTOR ONLY OR TRACTOR AND LOADER BELOW THEN ORDER ONE CODE FROM GROUP 03 THROUGH 05 AS REQUIRED			
MODEL - BASE MACHINE					**GROUP 01**
MF2604H		**MF2604H Base Tractor (45 Engine HP or 38 PTO HP)**			
WAJ	4330584	2wd, 8 x 2 Sideshift Transmission, Live PTO	25C15321		$ 18,025.00
WAN	4330585	4wd, 8 x 2 Sideshift Transmission, Live PTO	55C18685		21,983.00
LOADER PACKAGES					**GROUP 02**
2WD:					
	72537073	MF FLx2815 Loader Package - Pin Type Style . . . . . Includes: Mounting Kit, Grille Guard, and Valve Kit with Hoses	90C4057		4,774.00
4WD:					
	72537071	MF911X Loader Package - Skid Steer Style . . . . . Includes: Mounting Kit, Valve Kit and Grille Guard	05C6131		7,213.00
	72537072	MF911X Loader Package - Euro Style . . . . . Includes: Mounting Kit, Valve Kit and Grille Guard	55C6309		7,423.00
Note: For Additional Loader Options, Refer to Implements Price List Revision					
		All Tractors will be charged $325 for Assembly			
BUCKET OPTIONS - Recommended with Loader Packages					**GROUP 03**
2wd - MF FLx2815 Loader Package:					
	72533148ML	72-inch Skid Steer Material Bucket . . . . . (Requires 72530671ML)	75C505	228	595.00
	72533149ML	72-inch High Volume HD Skid Steer Material Bucket . . . Pre-Drilled to Accept a Bolt-on Cutting Edge (14 cu ft - designed for Compact Loaders) (Requires 72530671ML)	15C866	345	1,019.00
	72530648ML	72-inch Pin Type Material Bucket	00C476	228	560.00
4wd - MF911X Loader Packages:					
		Skid Steer Style			
	72533150ML	72-inch Skid Steer Material Bucket 180U, 17 cu ft	25C531	390	625.00
	72533151ML	84-inch Skid Steer Material Bucket 210U, 19 cu ft	90C657	437	774.00
		Euro Style			
	72533685ML	72-inch Euro Style Material Bucket 180U, 17 cu ft.	20C571	390	672.00
	72533686ML	84-inch Euro Style Material Bucket 210U, 19 cu ft.	60C727	437	856.00
ACCESSORIES - OPTIONAL					**GROUP 04**
	72530671ML	Skid Steer Type Bucket Quick Attach Tool Carrier Kit. . . (Required for 72533148ML/149ML Bucket on MF FLx2815 Loader)	25C480		565.00
	72533850ML	Grille Guard	20C129		152.00

Order Code	Catalog Number	Description	Factory Code	Approx. Weight (lb.)	List Price
LOADER MANUALS - Required with Loader Packages					**GROUP 05**
	72530698	MF FLx2815 English Language Loader Operator Manual .			No Charge
	72530697	MF FLx2815 French Language Loader Operator Manual .			No Charge
WHEELS AND TIRES					**GROUP 06**
		2WD TIRES:			
52	4338604	Front: 7.5 x 16 Pressed Steel Welded	40C1686		1,984.00
		Rear: 13.6 x 28 R1 Pressed Steel Disc Adjustable Rim			
		4WD TIRES:			
61	4343626	Front: 10.5/80-18 R1 Pressed Steel Disc Adjustable Rim	75C2358		2,775.00
		Rear: 12.4 X 28 R1 Pressed Steel Disc Adjustable Rim			

MF2605H

(F.O.B. PORT OF ENTRY)

MASSEY FERGUSON®

TRACTOR FEATURES

ENGINE SYSTEM
- Simpson 2.6L, T4 Final, EPA & CARB Certified
- 3 Cylinder
- Turbocharged, Intercooled, HPCR Fuel Injection
- 55 (40.4 kW) PS Gross Engine Horsepower @ 2000 RPM
- 46 (33.8 kW) PTO Horsepower @ 2000 RPM

FRONT AXLE - Two Factory Options
- 2 Wheel Drive with Telescopic Adjustment
  OR
- 4 Wheel Drive with Planetary Reduction Final Drives

POWER TRAIN
- **2wd Transmission** - 8x2 Sideshift - Sliding Gear - Transmission Shift Control Lever on Right Side and Range Box Shift Control Lever on Left Side
- Rear Axle Bevel Gear, Single Reduction Type
- **4wd Transmission** - 8x8 Synchro Shuttle with ComfiMesh™ - Transmission Shift Control Lever on Right Side and Range Box Shift Control Lever on Left Side
- Mechanical F-R Shuttle Lever Left Side of Steering Wheel
- Outboard Planetary Final Drives

- Brakes - Internal Multi Wet Disc with Mechanical Actuation
- Parking Brake - Mechanical Hand Lever

PTO
- **2wd** - Live, 540 RPM, 6 Spline shaft with Dual Stage Dry Clutch
- **4wd** - Independent PTO, 540 RPM, 6 Spline Shaft with Lever Operated Split Torque Clutch

THREE POINT LINKAGE
- Extendable Lower Links with Dual Turnbuckle Adjustment -Category I/II Cross Drilled Ball Ends
- Sway Chain Stabilizers

HYDRAULICS
- Hydrostatic Steering with Separate Reservoir
- Ferguson 3-Point Hitch System
- 3-Point Hitch Pump Flow (4.2 GPM) *
- Draft, Position and Response Control
- Single Spool Valve Included
- Hydraulic Pump Flow 10.6 GPM at Rear Remote *
- Maximum Hydraulic Flow 15.7 GPM (59.5 LPM) (Steering, 3-Point and Auxiliary Combined)

ELECTRICAL
- Headlights
- Single Rear Work Light
- Safety Lights
- 7 Pin ASAE Outlet

OPERATORS ENVIRONMENT
- Straddle Mount
- Grammar Seat that Inclines as it Moves Rearward
- Retractable Seatbelt
- Folding ROPS
- Suspended Foot Pedals
- Ground-Level Fuel Tank

OTHER STANDARD FEATURES
- Tilting One Piece Hood
- Swinging Drawbar
- Tool Box
- Drawbar Clevis

***Manufacturer's Estimate**

LOADER FEATURES

MF FLx2815 Pin Type Style Loader
- One Piece Main Frame with Tapered Arms and Single Cross Member
- Quick Attach Loader Frame Mount with Pin Lock
- Built-in Parking Stands
- (2) 2.76 inch Double Acting Lift Cylinders
- (2) 2.56 inch Double Acting Bucket Cylinders
- Hydraulic Valves with Integrated Joystick Mount to Right Side Loader Subframe
- Hydraulic Lines Routed Inside Main Frame for Protection and Visibility
- Galvanized Steel Bushings with Recessed Grease Points
- 72-inch Standard Duty Skid Steer Bucket
- **Fits all MF2600H Series 2wd Tractors**
- Maximum Lift Height: 111 Inches at Pivot Pin
- Lift Capacity to Full Height at Pivot Pin: 2,810 lbs
- Breakout Force: 4,240 lbs at Pivot Pin
- Rated Hydraulic Pressure: 2350 PSI
- Grille Guard Standard

MF911X Loader
- One Piece Main Frame with Tapered Arms and Single Cross Member
- Quick Attach Loader Frame Mount with Pin Lock
- Built-in Parking Stands
- (2) 2.4 inch Double Acting Lift Cylinders
- (2) 2.4 inch Double Acting Bucket Cylinders
- Hydraulic Valves with Integrated Joystick Mount to Right Side Loader Subframe
- Hydraulic Lines Routed Inside Main Frame for Protection and Visibility
- Galvanized Steel Bushings with Recessed Grease Points
- Universal Skid Steer or Euro Hook Type Implement Attachments
- **Fits all MF2600H Series 4wd Tractors**
- Maximum Lift Height: 115 inches at Pivot
- Lift Capacity to Full Height at 31.5 inches Forward of Pivot Pin: 1510 lbs
- Breakout Force: 2750 lbs
- Rated Hydraulic Pressure: 2755 PS
- Grille Guard Standard

MASSEY FERGUSON®

MF2605H

(F.O.B. PORT OF ENTRY)

Order Code	Catalog Number	Description	Factory Code		List Price
		ORDER TRACTOR ONLY OR TRACTOR AND LOADER BELOW THEN ORDER ONE CODE FROM GROUP 03 THROUGH 05 AS REQUIRED			
MODEL - BASE MACHINE					**GROUP 01**
MF2605H		**MF2605H Base Tractor (55 Engine HP or 46 PTO HP)**			
XAJ	4330586	2wd, 8 x 2 Sideshift Transmission, Live PTO	00C17816		$ 20,960.00
XAR	4330587	4wd, 8 x 8 Synchro Shuttle with ComfiMesh™ Transmission, Independent PTO	55C21643		25,463.00
LOADER - 2WD Only					**GROUP 02**
2WD:					
	72537073	MF FLx2815 Loader Package - Pin Type Style Includes: Mounting Kit, Grille Guard, and Valve Kit with Hoses	90C4057		4,774.00
4WD:					
	72537071	MF911X Loader Package - Skid Steer Style Includes: Mounting Kit, Valve Kit and Grille Guard	05C6131		7,213.00
	72537072	MF911X Loader Package - Euro Style Includes: Mounting Kit, Valve Kit and Grille Guard	55C6309		7,423.00
Note: For Additional Loader Options, Refer to Implements Price List Revision					
		All Tractors will be charged $325 for Assembly			
BUCKET OPTIONS - Recommended with Loader Packages					**GROUP 03**
2wd - MF FLx2815 Loader Package:					
	72533148ML	72-inch Skid Steer Material Bucket (Requires 72530671ML)	75C505	228	595.00
	72533149ML	72-inch High Volume HD Skid Steer Material Bucket Pre-Drilled to Accept a Bolt-on Cutting Edge (14 cu ft - designed for Compact Loaders) (Requires 72530671ML)	15C866	345	1,019.00
	72530648ML	72-inch Pin Type Material Bucket	00C476	228	560.00
4wd - MF911X Loader Packages:					
		Skid Steer Style			
	72533150ML	72-inch Skid Steer Material Bucket 180U, 17 cu ft	25C531	390	625.00
	72533151ML	84-inch Skid Steer Material Bucket 210U, 19 cu ft	90C657	437	774.00
		Euro Style			
	72533685ML	72-inch Euro Style Material Bucket 180U, 17 cu ft.	20C571	390	672.00
	72533686ML	84-inch Euro Style Material Bucket 210U, 19 cu ft.	60C727	437	856.00
ACCESSORIES - OPTIONAL					**GROUP 04**
	72530671ML	Skid Steer Type Bucket Quick Attach Tool Carrier Kit (Required for 72533148ML/149ML Bucket on MF FLx2815 Loader)	25C480		565.00
	72533850ML	Grille Guard	20C129		152.00

Order Code	Catalog Number	Description	Factory Code	Approx. Weight (lb.)	List Price
LOADER MANUALS - Required with Loader Packages					**GROUP 05**
	72530698	MF FLx2815 English Language Loader Operator Manual .			No Charge
	72530697	MF FLx2815 French Language Loader Operator Manual .			No Charge
WHEELS AND TIRES					**GROUP 06**
		2WD TIRES:			
99	4330518	Front: 7.5 x 16 Pressed Steel Welded . . . . . Rear: 13.6 x 28 R1 Pressed Steel Disc Adjustable Rim	40C1686		1,984.00
		4WD TIRES:			
55	4339602	Front: 9.5 X 24 R1 Pressed Steel Disc Adjustable Rim . . Rear: 14.9 X 28 R1 Pressed Steel Disc Adjustable Rim	55C2433		2,863.00
99	4330526	Front: 10.5/80-18 R4 Pressed Steel Welded . . . . . Rear: 14.9 x 24 R4 Pressed Steel Disc Adjustable Rim	60C2869		3,376.00
99	4330527	Front: 12.5/80-18 R4 Pressed Steel Welded . . . . . Rear: 16.9 x 24 R4 Pressed Steel Disc Adjustable Rim	55C2977		3,503.00

MASSEY FERGUSON®

RESERVED

MF2606H

(F.O.B. PORT OF ENTRY)

MASSEY FERGUSON®

TRACTOR FEATURES

ENGINE SYSTEM
- Simpson 2.6L, T4 Final, EPA & CARB Certified
- 3 Cylinder
- Turbocharged, Intercooled, HPCR Fuel Injection
- 65 (47.8 kW) PS Gross Engine Horsepower @ 2000 RPM
- 55 (40.4 kW) PTO Horsepower @ 2000 RPM with Independent PTO

FRONT AXLE - Two Factory Options
- 2 Wheel Drive with Telescopic Adjustment OR
- 4 Wheel Drive with Planetary Reduction Final Drives

POWER TRAIN
- Transmission - 8x8 Synchro Shuttle with ComfiMesh™ - Transmission Shift Control Lever on Right Side and Range Box Shift Control Lever on Left Side
- Mechanical F-R Shuttle Lever Left Side of Steering Wheel
- Outboard Planetary Final Drives
- Brakes - Internal Multi Wet Disc with Mechanical Actuation
- Parking Brake - Mechanical Hand Lever

PTO
- Independent PTO, 540 RPM, 6 Spline Shaft with Lever Operated Split Torque Clutch

THREE POINT LINKAGE
- Extendable Lower Links with Dual Turnbuckle Adjustment -Category I/II Cross Drilled Ball Ends
- Sway Chain Stabilizers

HYDRAULICS
- Hydrostatic Steering with Separate Reservoir
- Ferguson 3-Point Hitch System
- 3-Point Hitch Pump Flow (4.2 GPM) *
- Draft, Position and Response Control
- 2 Spool Valves Included
- Hydraulic Pump Flow 10.6 GPM at Rear Remote *
- Maximum Hydraulic Flow 15.7 GPM (59.5 LPM) (Steering, 3-Point and Auxiliary Combined)

ELECTRICAL
- Headlights
- Single Rear Work Light
- Safety Lights
- 7 Pin ASAE Outlet

OPERATORS ENVIRONMENT
- Straddle Mount
- Grammar Seat that Inclines as it Moves Rearward
- Retractable Seatbelt
- Folding ROPS
- Suspended Foot Pedals
- Ground-Level Fuel Tank

OTHER STANDARD FEATURES
- Tilting One Piece Hood
- Swinging Drawbar
- Tool Box
- Drawbar Clevis

***Manufacturer's Estimate**

LOADER FEATURES

MF FLx2815 Pin Type Style Loader
- One Piece Main Frame with Tapered Arms and Single Cross Member
- Quick Attach Loader Frame Mount with Pin Lock
- Built-in Parking Stands
- (2) 2.76 inch Double Acting Lift Cylinders
- (2) 2.56 inch Double Acting Bucket Cylinders
- Hydraulic Valves with Integrated Joystick Mount to Right Side Loader Subframe
- Hydraulic Lines Routed Inside Main Frame for Protection and Visibility
- Galvanized Steel Bushings with Recessed Grease Points
- 72-inch Standard Duty Skid Steer Bucket
- **Fits all MF2600H Series 2wd Tractors**
- Maximum Lift Height: 111 Inches at Pivot Pin
- Lift Capacity to Full Height at Pivot Pin: 2,810 lbs
- Breakout Force: 4,240 lbs at Pivot Pin
- Rated Hydraulic Pressure: 2350 PSI
- Grille Guard Standard

MF911X Loader
- One Piece Main Frame with Tapered Arms and Single Cross Member
- Quick Attach Loader Frame Mount with Pin Lock
- Built-in Parking Stands
- (2) 2.4 inch Double Acting Lift Cylinders
- (2) 2.4 inch Double Acting Bucket Cylinders
- Hydraulic Valves with Integrated Joystick Mount to Right Side Loader Subframe
- Hydraulic Lines Routed Inside Main Frame for Protection and Visibility
- Galvanized Steel Bushings with Recessed Grease Points
- Universal Skid Steer or Euro Hook Type Implement Attachments
- **Fits all MF2600H Series 4wd Tractors**
- Maximum Lift Height: 115 inches at Pivot
- Lift Capacity to Full Height at 31.5 inches Forward of Pivot Pin: 1510 lbs
- Breakout Force: 2750 lbs
- Rated Hydraulic Pressure: 2755 PS
- Grille Guard Standard

MASSEY FERGUSON®

MF2606H

(F.O.B. PORT OF ENTRY)

Order Code	Catalog Number	Description	Factory Code		List Price

ORDER TRACTOR ONLY OR
TRACTOR AND LOADER BELOW
THEN ORDER ONE CODE FROM GROUP 03 THROUGH 05 AS REQUIRED

MODEL - BASE MACHINE — GROUP 01

MF2606H		**MF2606H Base Tractor (65 Engine HP or 55 PTO HP)**			
YAM	4330588	2wd, 8 x 8 Synchro Shuttle with ComfiMesh™ Transmission, Independent PTO	60C20549		24,176.00
YAR	4330589	4wd, 8 x 8 Synchro Shuttle with ComfiMesh™ Transmission, Independent PTO	55C23972		28,203.00

LOADER PACKAGES — GROUP 02

2WD:

	72537073	MF FLx2815 Loader Package - Pin Type Style Includes: Mounting Kit, Grille Guard, and Valve Kit with Hoses	90C4057		4,774.00

4WD:

	72537071	MF911X Loader Package - Skid Steer Style Includes: Mounting Kit, Valve Kit and Grille Guard	05C6131		7,213.00
	72537072	MF911X Loader Package - Euro Style Includes: Mounting Kit, Valve Kit and Grille Guard	55C6309		7,423.00

Note: For Additional Loader Options, Refer to Implements Price List Revision

All Tractors will be charged $325 for Assembly

BUCKET OPTIONS - Recommended with Loader Packages — GROUP 03

2wd - MF FLx2815 Loader Package:

	72533148ML	72-inch Skid Steer Material Bucket (Requires 72530671ML)	75C505	228	595.00
	72533149ML	72-inch High Volume HD Skid Steer Material Bucket Pre-Drilled to Accept a Bolt-on Cutting Edge (14 cu ft - designed for Compact Loaders) (Requires 72530671ML)	15C866	345	1,019.00
	72530648ML	72-inch Pin Type Material Bucket	00C476	228	560.00

4wd - MF911X Loader Packages:

		Skid Steer Style			
	72533150ML	72-inch Skid Steer Material Bucket 180U, 17 cu ft	25C531	390	625.00
	72533151ML	84-inch Skid Steer Material Bucket 210U, 19 cu ft	90C657	437	774.00
		Euro Style			
	72533685ML	72-inch Euro Style Material Bucket 180U, 17 cu ft.	20C571	390	672.00
	72533686ML	84-inch Euro Style Material Bucket 210U, 19 cu ft.	60C727	437	856.00

ACCESSORIES - OPTIONAL — GROUP 04

	72530671ML	Skid Steer Type Bucket Quick Attach Tool Carrier Kit (Required for 72533148ML/149ML Bucket on MF FLx2815 Loader)	25C480	565.00
	72533850ML	Grille Guard	20C129	152.00

Order Code	Catalog Number	Description	Factory Code	Approx. Weight (lb.)	List Price
LOADER MANUALS - Required with Loader Packages					**GROUP 05**
	72530698	MF FLx2815 English Language Loader Operator Manual .			No Charge
	72530697	MF FLx2815 French Language Loader Operator Manual .			No Charge
WHEELS AND TIRES					**GROUP 06**
		2WD TIRES:			
53	4339601	Front: 7.5 X 16 Pressed Steel Welded . . . . . Rear: 14.9 X 28 R1 Pressed Steel Disc Adjustable Rim	85C1734		2,041.00
99	4330524	Front: 11L15 F3 Pressed Steel Welded. . . . . Rear: 14.9 x 24 R4 Pressed Steel Disc Adjustable Rim	65C2132		2,509.00
		4WD TIRES:			
55	4339602	Front: 9.5 X 24 R1 Pressed Steel Disc Adjustable Rim . . Rear: 14.9 X 28 R1 Pressed Steel Disc Adjustable Rim	55C2433		2,863.00
99	4330526	Front: 10.5/80-18 R4 Pressed Steel Welded . . . . . Rear: 14.9 x 24 R4 Pressed Steel Disc Adjustable Rim	60C2869		3,376.00
99	4330527	Front: 12.5/80-18 R4 Pressed Steel Welded . . . . . Rear: 16.9 x 24 R4 Pressed Steel Disc Adjustable Rim	55C2977		3,503.00

MASSEY FERGUSON®

RESERVED

MF2607H

(F.O.B. PORT OF ENTRY)

MASSEY FERGUSON®

TRACTOR FEATURES

ENGINE SYSTEM
- Simpson 2.6L, T4 Final, EPA & CARB Certified
- 3 Cylinder
- Turbocharged, Intercooled, HPCR Fuel Injection
- 74 (54.4 kW) PS Gross Engine Horsepower @ 2000 RPM
- 64 (47 kW) PTO Horsepower @ 2000 RPM with Independent PTO

FRONT AXLE - Two Factory Options
- 2 Wheel Drive with Telescopic Adjustment
  OR
- 4 Wheel Drive with Planetary Reduction Final Drives

POWER TRAIN
- Transmission - 8x8 Synchro Shuttle with ComfiMesh™ - Transmission Shift Control Lever on Right Side and Range Box Shift Control Lever on Left Side
- Mechanical F-R Shuttle Lever Left Side of Steering Wheel
- Outboard Planetary Final Drives
- Brakes - Internal Multi Wet Disc with Mechanical Actuation
- Parking Brake - Mechanical Hand Lever

PTO
- Independent PTO, 540 RPM, 6 Spline Shaft with Lever Operated Split Torque Clutch

THREE POINT LINKAGE
- Extendable Lower Links with Right Side Turnbuckle Adjustment - Category I/II Cross Drilled Ball Ends
- Sway Chain Stabilizers

HYDRAULICS
- Hydrostatic Steering with Separate Reservoir
- Ferguson 3-Point Hitch System
- 3-Point Hitch Pump Flow (4.2 GPM) *
- Draft, Position and Response Control
- 2 Spool Valves Included
- Hydraulic Pump Flow 10.6 GPM at Rear Remote *
- Maximum Hydraulic Flow 15.7 GPM (59.5 LPM) (Steering, 3-Point and Auxiliary Combined)

ELECTRICAL
- Headlights
- Single Rear Work Light
- Safety Lights
- 7 Pin ASAE Outlet

OPERATORS ENVIRONMENT
- Straddle Mount
- Grammar Seat that Inclines as it Moves Rearward
- Retractable Seatbelt
- Folding ROPS
- Suspended Foot Pedals
- Ground-Level Fuel Tank

OTHER STANDARD FEATURES
- Tilting One Piece Hood
- Swinging Drawbar
- Tool Box
- Drawbar Clevis

***Manufacturer's Estimate**

LOADER FEATURES

MF FLx2815 Pin Type Style Loader
- One Piece Main Frame with Tapered Arms and Single Cross Member
- Quick Attach Loader Frame Mount with Pin Lock
- Built-in Parking Stands
- (2) 2.76 inch Double Acting Lift Cylinders
- (2) 2.56 inch Double Acting Bucket Cylinders
- Hydraulic Valves with Integrated Joystick Mount to Right Side Loader Subframe
- Hydraulic Lines Routed Inside Main Frame for Protection and Visibility
- Galvanized Steel Bushings with Recessed Grease Points
- 72-inch Standard Duty Skid Steer Bucket
- **Fits all MF2600H Series 2wd Tractors**
- Maximum Lift Height: 111 Inches at Pivot Pin
- Lift Capacity to Full Height at Pivot Pin: 2,810 lbs
- Breakout Force: 4,240 lbs at Pivot Pin
- Rated Hydraulic Pressure: 2350 PSI
- Grille Guard Standard

MF911X Loader
- One Piece Main Frame with Tapered Arms and Single Cross Member
- Quick Attach Loader Frame Mount with Pin Lock
- Built-in Parking Stands
- (2) 2.4 inch Double Acting Lift Cylinders
- (2) 2.4 inch Double Acting Bucket Cylinders
- Hydraulic Valves with Integrated Joystick Mount to Right Side Loader Subframe
- Hydraulic Lines Routed Inside Main Frame for Protection and Visibility
- Galvanized Steel Bushings with Recessed Grease Points
- Universal Skid Steer or Euro Hook Type Implement Attachments
- **Fits all MF2600H Series 4wd Tractors**
- Maximum Lift Height: 115 inches at Pivot
- Lift Capacity to Full Height at 31.5 inches Forward of Pivot Pin: 1510 lbs
- Breakout Force: 2750 lbs
- Rated Hydraulic Pressure: 2755 PS
- Grille Guard Standard

MASSEY FERGUSON®

MF2607H

(F.O.B. PORT OF ENTRY)

Order Code	Catalog Number	Description	Factory Code		List Price

ORDER TRACTOR ONLY OR
TRACTOR AND LOADER BELOW
THEN ORDER ONE CODE FROM GROUP 03 THROUGH 05 AS REQUIRED

MODEL - BASE MACHINE — GROUP 01

MF2607H		**MF2607H Base Tractor (74 Engine HP or 64 PTO HP)**			
ZAM	4330590	2wd, 8 x 8 Synchro Shuttle with ComfiMesh™ Transmission, Independent PTO	35C22704		26,711.00
ZAR	4330591	4wd, 8 x 8 Synchro Shuttle with ComfiMesh™ Transmission, Independent PTO	70C26011		30,602.00

LOADER PACKAGES — GROUP 02

2WD:

	72537073	MF FLx2815 Loader Package - Pin Type Style . . . . . Includes: Mounting Kit, Grille Guard, and Valve Kit with Hoses	90C4057		4,774.00

4WD:

	72537071	MF911X Loader Package - Skid Steer Style . . . . . Includes: Mounting Kit, Valve Kit and Grille Guard	05C6131		7,213.00
	72537072	MF911X Loader Package - Euro Style . . . . . Includes: Mounting Kit, Valve Kit and Grille Guard	55C6309		7,423.00

Note: For Additional Loader Options, Refer to Implements Price List Revision

All Tractors will be charged $325 for Assembly

BUCKET OPTIONS - Recommended with Loader Packages — GROUP 03

2wd - MF FLx2815 Loader Package:

	72533148ML	72-inch Skid Steer Material Bucket . . . . . (Requires 72530671ML)	75C505	228	595.00
	72533149ML	72-inch High Volume HD Skid Steer Material Bucket . . . Pre-Drilled to Accept a Bolt-on Cutting Edge (14 cu ft - designed for Compact Loaders) (Requires 72530671ML)	15C866	345	1,019.00
	72530648ML	72-inch Pin Type Material Bucket	00C476	228	560.00

4wd - MF911X Loader Packages:

		Skid Steer Style			
	72533150ML	72-inch Skid Steer Material Bucket 180U, 17 cu ft	25C531	390	625.00
	72533151ML	84-inch Skid Steer Material Bucket 210U, 19 cu ft	90C657	437	774.00
		Euro Style			
	72533685ML	72-inch Euro Style Material Bucket 180U, 17 cu ft.	20C571	390	672.00
	72533686ML	84-inch Euro Style Material Bucket 210U, 19 cu ft.	60C727	437	856.00

ACCESSORIES - OPTIONAL — GROUP 04

	72530671ML	Skid Steer Type Bucket Quick Attach Tool Carrier Kit. . . (Required for 72533148ML/149ML Bucket on MF FLx2815 Loader)	25C480	565.00
	72533850ML	Grille Guard	20C129	152.00

Order Code	Catalog Number	Description	Factory Code	Approx. Weight (lb.)	List Price
LOADER MANUALS - Required with Loader Packages					**GROUP 05**
	72530698	MF FLx2815 English Language Loader Operator Manual .			No Charge
	72530697	MF FLx2815 French Language Loader Operator Manual .			No Charge
WHEELS AND TIRES					**GROUP 06**
		2WD TIRES:			
56	4340601	Front: 7.5 X 16 Pressed Steel Welded . . . . . Rear: 16.9 X 28 R1 Pressed Steel Disc Adjustable Rim	60C1832		2,156.00
99	4330524	Front: 11L15 F3 Pressed Steel Welded. . . . . Rear: 14.9 x 24 R4 Pressed Steel Disc Adjustable Rim	65C2132		2,509.00
		4WD TIRES:			
57	4340602	Front: 9.5 X 24 R1 Pressed Steel Disc Adjustable Rim . . Rear: 16.9 X 28 R1 Pressed Steel Disc Adjustable Rim	45C2530		2,977.00
99	4330527	Front: 12.5/80-18 R4 Pressed Steel Welded . . . . . Rear: 16.9 x 24 R4 Pressed Steel Disc Adjustable Rim	55C2977		3,503.00
99	4330528	Front: 10.5/80-18 R4 Pressed Steel Welded . . . . . Rear: 16.9 x 24 R4 Pressed Steel Disc Adjustable Rim	55C2977		3,503.00

MASSEY FERGUSON®

RESERVED

FIELD INSTALLED ACCESSORIES

PARTS SUPPLIED

DEALER / FIELD INSTALLED ACCESSORIES

Consult your AGCO parts ordering system using oneAGCO Solutions-Online to determine current availability and pricing.

CATALOG NUMBER	DESCRIPTION	2604H	2605H	2606H	2607H	NOTES
ENGINE						
773323M92	Engine Block Heater	X	X	X	X	Engines built before December 2017 order adaptor 4326080M1
ACW7873840	Horizontal Exhaust	X	X	X	X	Use Original Gasket and Hardware
LINKAGE / DRAWBAR						
180485M1	Category 1 Cross Drawbar	X	X	X	X	
3306432M2	Category 2 Cross Drawbar	X	X	X	X	
HYDRAULICS						
2400897S91	2nd Spool Valve (Spring Return to Neutral)	X	X			Order Both Catalog Numbers to Make a Complete Kit Requires 4326082M11 Spool Valve Installed first
OPERATOR'S AREA						
2401255S91	Seat Arm Rest Kit	X	X	X	X	
22076A91	7 Pin Electrical Plug	X	X	X	X	
T0288011	Canopy	X	X	X	X	Requires 4326001M11 Adapter Kit
4326001M11	Canopy Adapter Kit	X	X	X	X	
ACP0285970	Steering Hose Kit Required Qty 2 per Tractor	X	X	X	X	For 2wd Tractors Only

MASSEY FERGUSON®

FIELD INSTALLED ACCESSORIES

PARTS SUPPLIED

DEALER / FIELD INSTALLED ACCESSORIES

Consult your AGCO parts ordering system using oneAGCO Solutions-Online to determine current availability and pricing.

CATALOG NUMBER	DESCRIPTION	2604H	2605H	2606H	2607H	NOTES
WEIGHTS / BALLAST						
2400888S91	Front Weight Bracket	X	X	X	X	
3609170M92	Front Suitcase Weight (90 lbs)	X	X	X	X	Maximum of 5 Weights on 2605 and 2615 Tractors
4326058M1	**Rear Wheel Weight (100 lbs)** Mounting Hardware Required per Wheel Weight: 4326121M1 Spacer (Qty 3) AG552046 Hex Head Bolt (Qty 3) SN669 Hex Nut (Qty 3) SNFK150283 Flat Washer (Qty 3)	X				8x2 Transmission Only. Single Weight. Does Not Include Hardware. Do Not Exceed the Maximum Allowable Tractor Weight.
4326651M2	Rear Wheel Weight Adaptor Mounting Hardware Required per Wheel Weight: 180004M1Studs (Qty 12)	X	X			For 2605H - 2wd Only
4326060M1	**Rear Wheel Weight (100 lbs)** Mounting Hardware Required per Wheel Weight: AG552046 Hex Head Bolt (Qty 4) SN669 Hex Nut (Qty 4) SNFK150283 Flat Washer (Qty 4)			X	X	Single Weight. Does Not Include Hardware. Do Not Exceed the Maximum Allowable Tractor Weight.
ACW012805A	Rear Wheel Weight Adaptor Requires 4326722M91 Hardware Kit		X	X	X	For 2605H - 4wd Only
ACW0128080	Rear Wheel Weight Requires 4326722M91 Hardware Kit			X	X	
4326722M91	Rear Wheel Weight Hardware Kit (Long Studs)			X	X	
MISCELLANEOUS						
ACW0089550	Grille Guard Without Loader	X	X	X	X	

MASSEY FERGUSON®

4600M Series
UTILITY

MF4607M

MASSEY FERGUSON®

(F.O.B. PORT OF ENTRY)

TRACTOR FEATURES

ENGINE SYSTEM
- Engine: AGCO Power 33AWIC 3 Cylinder (Turbocharged)
  74 Max Engine HP (55 kW)
  70.1 Engine HP (52.2 kW) @ 2200 RPM
  56 PTO HP Est. (41.8 kW) @ 2000 RPM
- EPA Tier 4 Final and CARB Certified
- Air Cleaner: Dual Element Dry Type
- Air Cleaner Intake, Under Hood
- Vertical Exhaust, Side of Hood
- Cooling System: Antifreeze 50/50 Mix
- Cold Starting Aid: Intake Heater

FRONT AXLE
- 2wd: Adjustable

POWER TRAIN
- Transmission:
  12 X 12 Power Shuttle with Left Hand Shuttle Lever
  6 Synchronized Gears, 2 Ranges
  Wet Multi-disc Clutch with Left Side Clutch Pedal
- Comfort Control - Fine Tune Shuttle Sensitivity
- Rear Axle: Inboard Planetary Final Drives, with Foot Operated Mechanical Differential Lock
- Brakes: Independent Oil Immersed Wet Disc Brakes with Independent Foot Pedal Operation
- Hook and Lever Parking Brake
- PTO: Independent 540/540E RPM Speeds,
  6 Spline Shaft and 21 Spline (1.375 In. Diameter),
  Independent Wet Disc Clutch, Electro-hydraulic Engagement

HYDRAULIC SYSTEM
- Steering: Hydrostatic, Adjustable Tilt Steering Column
- Implement System:
  Open Center System, Engine Driven Gear Pump
  17.5 GPM (66 LPM) flow to Remotes
  Optional Integrated Cable-controlled Loader Joystick with Mid Valves
- Rear Linkage:
  ASAE Category II with Telescopic Ball Ends
  Shared Pump with Implements
  Lift Capacity at 24": 3307 LBS (1500 KG)
  Adjustable Lift Rod, Turn Buckle Top Link
  Telescopic Stabilizers
- Swinging Drawbar

ELECTRICAL
- 12 Volt DC, Negative Ground
- Intake Air Pre Heater
- Wet, Maintenance Free 799 CCA Battery
  95 AMP Alternator
- Ignition: Key with Safety Start
- Keyed Engine Shutoff
- Lighting: 4 Headlights, 2 Rear Marker Light Assemblies
- 7 Pin ASAE Outlet Socket

INSTRUMENTS
- Digital and Analog Dash Display
- Digital Engine Tachometer
- Digital Fuel Gauge
- Digital Engine Temperature
- Digital Transmission Display
- Digital Hour Meter
- Operation and Service Lights

OPERATORS ENVIRONMENT (Cab Models)
- 6-post Cab With HVAC, Tinted Safety Glass, Front Windshield Wiper/Washer, Front and Rear Roof-mounted Working Lights, 2 Doors, Pre-wired for Audio System
- Right and Left Side View Mirrors
- Seat: Adjustable Spring Cushion with Armrests
- Retractable Seat Belt
- Pendant Style (Suspended) Foot Pedals
- Hand and Foot Throttle
- Left and Right Side Foot Step

OTHER STANDARD FEATURES
- Fuel Tank Under Platform, Ground Fill
  Fuel Capacity: 30.4 gallons (115 Liters)
- One-Piece Tilting Hood
- Tool Box
- SMV Emblem

MF4607M

(F.O.B. PORT OF ENTRY)

MASSEY FERGUSON®

Order Code	Catalog Number	Description	Factory Code	List Price
ORDER TRACTOR THEN ORDER ONE CODE FROM GROUP 02 THROUGH 06 AS REQUIRED				
BASE MACHINE				**GROUP 01**
MF4607M	72530438	MF4607M Base Tractor	45C35510	41,777.00
ALL Tractors will be charged $325 for Assembly				
OPERATOR ENVIRONMENT				**GROUP 02**
CE3	72530445	Standard Cab	25C8963	10,545.00
FRONT AXLE				**GROUP 03**
T	72530447	2wd Front Axle	(75C3531)	(4,155.00)
TRANSMISSION				**GROUP 04**
	72530449	12 X 12 Hydraulic Shuttle		In Base

SUBJECT TO AVAILABILITY

Order Code	Catalog Number	Description	Factory Code	List Price
HYDRAULICS				**GROUP 05**
		2WD Hydraulic Options		
V	72530454	1 Spool Valve - Spring Return to Neutral		In Base for 2wd
REAR AND FRONT TIRES				**GROUP 06**
		2WD Tires		
	72530421M	R: 16.9-30 R1 . . . . . F: 7.50-18	75C3021	3,555.00

SUBJECT TO AVAILABILITY

MASSEY FERGUSON®

MF 4700
GLOBAL SERIES

MF 4700 PLATFORM

(F.O.B. PORT OF ENTRY)

TRACTOR FEATURES

ENGINE SYSTEM
- AGCO Power 33AWIC 3 Cylinder (Turbocharged)
  EPA Tier 4 Final and CARB Certified
  MF4707 - Diesel Oxidation Catalyst (DOC), Exhaust Gas Recirculation (EGR)
  MF4708/4709/4710 - SCR Technology (Post-Combustion DEF), Diesel Oxidation Catalyst (DOC)
- Air Cleaner: Dual Element Dry Type
- Air Cleaner Intake, Under Hood
- Vertical Exhaust
- Cooling System: Antifreeze 50/50 Mix
- Cold Starting Aid: Intake Heater

HORSEPOWER
(Max Engine @ 2000 RPM; Rated Engine & PTO @ 2200 RPM)

MF4707 Deluxe Powershuttle Only:
75 Max Engine HP, 70 Engine HP, 58 PTO HP

MF4708 Deluxe Powershuttle:
85 Max Engine HP, 80 Engine HP, 67 PTO HP

MF4709 Deluxe Powershuttle:
95 Max Engine HP, 90 Engine HP, 77 PTO HP

MF4710 Deluxe Powershuttle:
100 Max Engine HP, 99 Engine HP, 87 PTO HP

FRONT AXLE
- 2wd: Adjustable
- 4wd: Dana 720, Center Driveline, Open Differential, Standard Hydraulically Actuated Differential Lock

POWERTRAIN
- Transmission:
  2wd:
  18 mph (30 kph) 12x12 Transmission with Power Shuttle (6 Gears, 2 Ranges with Declutch on Main Gear Lever)
  4wd:
  25 mph (40 kph) 12x12 Transmission with Power Shuttle (6 Gears, 2 Ranges with Declutch on Main Gear Lever)
- Rear Axle: Inboard Planetary Final Drives, with HydraLock Differential Lock, Flanged Rear Axle
- Brakes: Independent Oil Immersed Wet Disc Brakes with Independent Foot Pedal Operation
  Hook and Lever Parking Brake
- PTO: Independent 540/540E RPM, External Control with 6 Spline Non-Flanged Shaft (1-3/8 In. Diameter), Independent Wet Disc Clutch, Electro-hydraulic Engagement

HYDRAULIC SYSTEM
- 2 Mechanically Controlled Spool Valves (1 x DA KO FL + 1 x DA KO FL)
- Implement System:
  Open Center System, Engine Driven Gear Pump
  17.1 GPM (65 LPM) Flow
  Optional Cable-controlled Loader Joystick with Mid Valves
- Rear Linkage:
  ASAE Category II with Telescopic Ball Ends
  Lift Capacity at 24": 4850 LBS (2200 KG)
  2 Adjustable Rear Linkage Turnbuckles
  Standard Telescopic Stabilizers
- Swing Straight Drawbar with 350/400/500mm Positions, Cat 2 Clevis

ELECTRICAL
- 12 Volt DC, Negative Ground
- Intake Air Pre Heater
- High Capacity Wet Charge, Maintenance Free SAE 720 CCA Battery
- 80 AMP Alternator
- Ignition: Key with Safety Start
- Keyed Engine Shutoff
- Lighting: 4 Headlights, 2 Rear Marker Light Assemblies
- Mid Mounted Work Lights
- Rear Brake Lights
- Standard 1 Rear Work Light
- 7 Pin ASAE Outlet Socket
- 30 Amp Auxiliary Electrical Socket

INSTRUMENTS
- Digital & Analog Instrument Panel with Performance Monitor
- Analog Engine Tachometer
- Analog Fuel Gauge
- Analog Engine Temperature
- Digital Transmission Display
- Digital Hour Meter
- Operation and Service Lights

OPERATOR ENVIRONMENT (PLATFORM MODELS)
- Semi-Flat Floor Platform with Rubber Floor Mat
- Hand Rail with Glass Heat Shields
- Lever Controlled 3-Point Linkage with Draft Control
- 2 Post Folding ROPS
- Tilt Steering Column
- Mechanical Spring Suspension Seat with Armrests
- Retractable Seat Belt
- Cup Holder
- Pendant Style (Suspended) Foot Pedals
- Hand and Foot Throttle
- Left Side and Right Side Foot Step Entry
- External 3-Point Lift Control on Left Hand Side Fender

OTHER STANDARD FEATURES
- Fuel Tank Under Platform, Ground Fill
  Fuel Capacity: 27.7 Gallons (105 Liters)
- One-Piece Tilting Hood
- Rear Fender Side Extensions - 100mm
- Fuel Tank Guard
- Tool Box
- SMV Sign

MF 4700 PLATFORM

MASSEY FERGUSON®

(F.O.B. PORT OF ENTRY)

LOADER FEATURES

MF931X LOADER

- One Piece Main Frame with Tapered Arms and Single Cross Member
- Quick Attach Loader Frame Mount with Pin Lock
- Built-in Parking Stands
- (2) 2.8 inch (70 mm) Double Acting Lift Cylinders
- (2) 2.8 inch (70 mm) Double Acting Bucket Cylinders
- Hydraulic Lines Routed Inside Main Frame for Protection and Visibility
- Galvanized Steel Bushings with Recessed Grease Points
- Standard with Flat Face Couplers
- Rated on MF4610 Tractor with 11.2-24 Front Tires and 16.9-30 Rear Tires
- Powder Painted with Corrosion Protection
- Bucket Level Indicator
- Lift Capacity to Full Height @ 31.5 inches Forward of Pivot Pin: 2140 lbs
- Maximum Lift Height: 136 inches at Pivot
- Breakout Force @ 31.5 inches Forward of Pivot Pin: 3540 lbs
- Rated Hydraulic Pressure: 2828 PSI
- Maximum Roll Back Angle: 44 Degrees
- Maximum Dump Angle: 50 Degrees

MFFL.3522 LOADER

- One Piece 4 mm High Tensile Main Frame with Tapered and Emboss Arms
- Quick Attach Implement Mounting with Euro Style Single Lever Locking System
- 82 mm Arm Profile
- 80 mm Double Acting Lift Cylinders
- 75 mm Double Acting, Equal Displacement Bucket Cylinders
- Industrial Grade Hydraulic Fittings and Twin Braided Hoses, Incorporated Internally Inside Loader Boom
- Central Valve, Equalized Oil Distribution Valve with Incorporated Relief Valves
- 4-Flat Face Hydraulic Tips on Boom and Bucket Circuits
- Protective Hose Cover
- Lock and Go Loader/Subframe Connection System
- Pivots Are Greasable and Include Industrial Grade Pins and Bushings
- Powder Painted with Corrosion Protection
- Bucket Level Indicator
- Front Bumper Guard (With Subframe Set)
- Buckets Have Heavy Duty, Welded-On Cutting Edge, Box Beam Section for Stiffness and Torsional Rigidity and Lateral Reinforcing Bars
- 140" (3.55 m) Lift Height to Pivot Pin
- **FL.3522:** 2760 lb. (1252 kg) Lift Capacity to Full Height, 31.5" (800 mm) Forward of Pivot Pin per ASABE 301.3 @ 2828 PSI
- Maximum Roll Back Angle: 58 Degrees
- Maximum Dump Angle: 58 Degrees

MFFL.3615 LOADER

- One Piece 4 mm High Tensile Main Frame with Tapered and Emboss Arms
- Quick Attach Implement Mounting with Euro Style Single Lever Locking System
- 82 mm Arm Profile
- 70 mm Double Acting Lift Cylinders
- 75 mm Double Acting, Equal Displacement Bucket Cylinders
- Industrial Grade Hydraulic Fittings and Twin Braided Hoses, Incorporated Internally Inside Loader Boom
- Central Valve, Equalized Oil Distribution Valve with Incorporated Relief Valves
- 4-Flat Face Hydraulic Tips on Boom and Bucket Circuits
- Protective Hose Cover
- Lock and Go Loader/Subframe Connection System
- Pivots Are Greasable and Include Industrial Grade Pins and Bushings
- Powder Painted with Corrosion Protection
- Bucket Level Indicator
- Front Bumper Guard (With Subframe Set)
- Buckets Have Heavy Duty, Welded-On Cutting Edge, Box Beam Section for Stiffness and Torsional Rigidity and Lateral Reinforcing Bars
- 140" (3.55 m) Lift Height to Pivot Pin
- **FL.3615:** 3420 lb. (1551 kg) Lift Capacity to Full Height, 31.5" (800 mm) Forward of Pivot Pin per ASABE 301.3 @ 2828 PSI
- Maximum Roll Back Angle: 58 Degrees
- Maximum Dump Angle: 58 Degrees

MF 4700 PLATFORM

MASSEY FERGUSON®

(F.O.B. PORT OF ENTRY)

Feature Code	Description	Factory Code	Approx. Weight (lb.)	List Price

ONE FEATURE CODE FROM EACH GROUP MUST BE SPECIFIED (Unless In Base Option is Desired)
Certain options will require extended lead times from factory and are so noted.

BASE MACHINE

Deluxe Edition, Platform

2WD:

MF4707~ES	Massey Ferguson 4707	40C32439	38,164.00
MF4708~ES	Massey Ferguson 4708	35C39262	46,191.00
MF4709~ES	Massey Ferguson 4709	75C40914	48,135.00
MF4710~ES	Massey Ferguson 4710	80C42676	50,208.00

4WD:

MF4707~ES	Massey Ferguson 4707	00C36074	42,440.00
MF4708~ES	Massey Ferguson 4708	10C42862	50,426.00
MF4709~ES	Massey Ferguson 4709	95C44477	52,327.00
MF4710~ES	Massey Ferguson 4710	85C46240	54,401.00

ALL Tractors will be charged $325 for Assembly

TRANSMISSION

25-EA704/EC017	12 x 12 Synchro Power Shuttle, 18 MPH (30 KPH)		**In Base for 2wd**
25-EA706/EC017	12 x 12 Synchro Power Shuttle, 25 MPH (40 KPH)		**In Base for 4wd**
25-G1110	Dyna-2 24 x 24 Speedmatching - Power Shuttle with Brake to Neutral, 25 MPH (40 KPH) 4wd Models Only **(Available Spring 2021)**	25C1364	1,605.00

CREEPER GEAR

35-EN000	Without Creeper Gear		**In Base**
35-EN002	Creeper Gear (13.68:1 Reduction) - 4wd Models Only **(Extended Factory Lead Time Approximately 160 Days)**	20C1251	1,472.00

AUXILIARY VALVES

50-KX032	2 Mechanically Controlled Spool Valves, (1 x DA KO FL + 1 x DA KO FL)		**In Base**

PTO

100-LA108	540/540E RPM PTO, External Control, 540 RPM 6 Spline Non-Flanged Shaft		**In Base**
100-LA110	540/1000 RPM Dual Speed PTO, External Control, with 6 and 21 Spline Flange PTO Shafts (Available for MF4710 Only)	55C257	303.00

EXHAUST

40-CC004	Vertical Exhaust with Heat Shield		**In Base**
40-CC025	Down Exhaust with Heat Shield - 4wd Models Only **(Extended Factory Lead Time Approximately 160 Days)**	(65C041)	(49.00)

LOADER PROVISION

350-LL000	Without Loader Provision		**In Base**
350-LL001	Front Loader Provision includes Frame Rails, Uprights, Subframe, Hydraulic Kit with Joystick and Valve and Grille Guard	15C2039	2,399.00

(F.O.B. PORT OF ENTRY)

Feature Code	Description	Factory Code	Approx. Weight (lb.)	List Price
TIRE BRAND SELECTION				
70-Base	Trelleborg Brand			No Charge

NOTE: Tire Options not In Base are Subject to Extended Factory Lead Time of Approximately 120 Days (Rear Wheel Weights not available when ordering shipping wheels)

FRONT AND REAR TIRES FOR 4707, 4708 AND 4709

2WD - Flange Axle - Set of 2

75-W1835	Rear: 420/85R30 (16.9R30) R1W Front: 9.5L-15 F2 Fixed			**In Base**
75-W1837	Rear: 460/85R30 (18.4R30) R1W Front: 9.5L-15 F2 Fixed	80C329		388.00
75-W1836	Rear: 420/85R34 (16.9R34) R1W Front: 9.5L-15 F2 Fixed	30C542		638.00
75-W5990	Rear Shipping Wheel Front Shipping Wheel	(05C2680)		(3,153.00)

4WD - Flange Axle - Set of 2

75-W1839	Rear: 420/85R30 (16.9R30) R1W Front: 320/85R24 (12.4R24) R1W			**In Base**
75-W1841	Rear: 460/85R30 (18.4R30) R1W Front: 340/85R24 (13.6R24) R1W	40C479		564.00
75-W1840	Rear: 420/85R34 (16.9R34) R1W Front: 340/85R24 (13.6R24) R1W	90C691		814.00
75-W5990	Rear Shipping Wheel Front Shipping Wheel	(40C3658)		(4,304.00)

(F.O.B. PORT OF ENTRY)

Feature Code	Description	Factory Code	Approx. Weight (lb.)	List Price

NOTE: The tires listed below can only be ordered once the factory shipping wheel option is selected. The price deduct for the shipping wheels will be netted with the list price increase for the tire configurations shown below, on the tractor invoice. The tire configurations shown below will be installed at the Assembly Center and delivered to the dealer. The shipping wheels will not be delivered separately to the dealer, only the Low Profile Wheels & Tires will be. The process must work this way for internal systems reasons.

The tire and wheel combinations shown below are NOT compatible with a "Global Series" rear wheel weight.

FRONT AND REAR TIRES FOR 4707, 4708 AND 4709

4WD - Flange Axle - Set of 2

ACTWLS1	Rear: 19.5L-24 10 Ply R4 Front: 12.5/80-18 14 Ply R4	20C2747		3,232.00
ACTWLS3	Rear: 18.4-26 12 Ply R1 Front: 11.2-24 8 Ply R1	30C3279		3,858.00

(F.O.B. PORT OF ENTRY)

Feature Code	Description	Factory Code	Approx. Weight (lb.)	List Price
FRONT AND REAR TIRES FOR 4710				
	2WD - Flange Axle - Set of 2			
75-W1836	Rear: 420/85R34 (16.9R34) R1W . . . . . Front: 9.5L-15 F2 Fixed			**In Base**
75-W1837	Rear: 460/85R30 (18.4R30) R1W . . . . . Front: 9.5L-15 F2 Fixed	(50C195)		(230.00)
75-W1834	Rear: 15.5R38 R1W . . . . . Front: 9.5L-15 F2 Fixed	00C170		200.00
75-W5990	Rear Shipping Wheel . . . . . Front Shipping Wheel	(60C3192)		(3,756.00)
	4WD - Flange Axle - Set of 2			
75-W1840	Rear: 420/85R34 (16.9R34) R1W . . . . . Front: 340/85R24 (13.6R24) R1W			**In Base**
75-W1839	Rear: 420/85R30 (16.9R30) R1W . . . . . Front: 320/85R24 (12.4R24) R1W	(10C634)		(746.00)
75-W1841	Rear: 460/85R30 (18.4R30) R1W . . . . . Front: 340/85R24 (13.6R24) R1W	(50C195)		(230.00)
75-W1838	Rear: 15.5R38 R1W . . . . . Front: 340/85R24 (13.6R24) R1W	00C170		200.00
75-W5990	Rear Shipping Wheel . . . . . Front Shipping Wheel	(00C4318)		(5,080.00)

(F.O.B. PORT OF ENTRY)

Feature Code	Description	Factory Code	Approx. Weight (lb.)	List Price

NOTE: The tires listed below can only be ordered once the factory shipping wheel option is selected. The price deduct for the shipping wheels will be netted with the list price increase for the tire configurations shown below, on the tractor invoice. The tire configurations shown below will be installed at the Assembly Center and delivered to the dealer. The shipping wheels will not be delivered separately to the dealer, only the Low Profile Wheels & Tires will be. The process must work this way for internal systems reasons.

The tire and wheel combinations shown below are NOT compatible with a "Global Series" rear wheel weight.

FRONT AND REAR TIRES FOR 4710

4WD - Flange Axle - Set of 2

ACTWLS1	Rear: 19.5L-24 10 Ply R4 . . . . . 20C2747 Front: 12.5/80-18 14 Ply R4		3,232.00
ACTWLS3	Rear: 18.4-26 12 Ply R1 . . . . . 30C3279 Front: 11.2-24 8 Ply R1		3,858.00

(F.O.B. PORT OF ENTRY)

Feature Code	Description	Factory Code	Approx. Weight (lb.)	List Price
LOADER OPTIONS				
For Factory Loader Ready Tractors - Requires LL001				
Non Self-Leveling for 4707-4710				
7296206	MF931X Loader - Skid Steer Style with Hose Extension	05C3445	775	4,053.00
7296382	MFFL.3522 Loader - Euro Style with 4 Flat Face 3/8-inch. Couplers, Includes Soft Drive with Electric Shutoff, Hose Extension Kit and Soft Drive Harness	40C4780		5,624.00
Mechanical Self-Leveling for 4707-4710				
7296394	MFFL.3615 Loader - Skid Steer Style with 4 Flat Face 3/8-inch. Couplers and 12 Pin Connection, Includes Soft Drive with Electric Shutoff, Hose Extension Kit and Soft Drive Harness	40C5613		6,604.00
7296392	MFFL.3615 Loader - Euro Style with 4 Flat Face 3/8-inch. Couplers and 12 Pin Connection, Includes Soft Drive with Electric Shutoff, Hose Extension Kit and Soft Drive Harness	40C5613		6,604.00
BUCKET OPTIONS - Recommended with Loader Packages Only				
Skid Steer Style				
72533150ML	72-inch Skid Steer Material Bucket 180U, 17 cu ft	25C531	390	625.00
72533151ML	84-inch Skid Steer Material Bucket 210U, 19 cu ft	90C657	437	774.00
72537004ML	83-inch Heavy Duty Skid Steer Material Bucket - SM 210 (Recommended for MFFL.3522 or .3615 Loader)	15C968		1,139.00
Euro Style				
72533685ML	72-inch Euro Style Material Bucket 180U, 17 cu ft	20C571	390	672.00
72533686ML	84-inch Euro Style Material Bucket 210U, 19 cu ft	60C727	437	856.00
72537006ML	83-inch Euro Style Material Bucket - GM 215 (Recommended for MFFL.3615 Loader)	79C1098		1,427.00
MISCELLANEOUS				
275-TC025	English Language Operator's Manual - 4700 Platform Tractor			**In Base**
ASSEMBLY CENTER MISCELLANEOUS OPTIONS				
ACWTPKG1	100kg Weight Adapter Package	95C257		335.00
ACWTPKG2	100kg Stackable Rear Wheel Weight Package (order quantity 1 or 2) (Requires Adapter Package ACWTPKG1 to Install)	95C257		335.00
FROPML1	French Language Operator Manual - 4707 Platform Tractor			No Charge
FROPML2	French Language Operator Manual - 4708/4709/4710 Platform Tractor			No Charge

MASSEY FERGUSON®

MF 4700 CAB

(F.O.B. PORT OF ENTRY)

TRACTOR FEATURES

ENGINE SYSTEM
- AGCO Power 33AWIC 3 Cylinder (Turbocharged)
  EPA Tier 4 Final and CARB Certified
  MF4707 - Diesel Oxidation Catalyst (DOC), Exhaust Gas Recirculation (EGR)
  MF4708/4709/4710 - SCR Technology (Post-Combustion DEF), Diesel Oxidation Catalyst (DOC)
- Air Cleaner: Dual Element Dry Type
- Air Cleaner Intake, Under Hood
- A-Pillar Exhaust with Heat Shield
- Cooling System: Antifreeze 50/50 Mix
- Cold Starting Aid: Intake Heater

HORSEPOWER
(Max Engine @ 2000 RPM; Rated Engine & PTO @ 2200 RPM)
MF4707 Deluxe Powershuttle:
75 Max Engine HP, 70 Engine HP, 57 PTO HP
MF4708 Deluxe Powershuttle:
85 Max Engine HP, 80 Engine HP, 67 PTO HP
MF4709 Deluxe Powershuttle:
95 Max Engine HP, 90 Engine HP, 77 PTO HP
MF4710 Deluxe Powershuttle:
100 Max Engine HP, 100 Engine HP, 87 PTO HP

FRONT AXLE
- 2wd: Adjustable
- 4wd: Dana 720, Center Driveline, Open Differential, Standard Hydraulically Actuated Differential Lock

POWERTRAIN
- Transmission:
  2wd:
  18 mph (30 kph) 12x12 Transmission with Power Shuttle (6 Gears, 2 Ranges with Declutch on Main Gear Lever)
  4wd:
  25 mph (40 kph) 12x12 Transmission with Power Shuttle (6 Gears, 2 Ranges with Declutch on Main Gear Lever)
- Rear Axle: Inboard Planetary Final Drives, with HydraLock Differential Lock, Flanged Rear Axle
- Brakes: Independent Oil Immersed Wet Disc Brakes with Independent Foot Pedal Operation
  Hook and Lever Parking Brake
- PTO: Independent 540/540E RPM, External Control with 6 Spline Non-Flanged Shaft (1-3/8 In. Diameter), Independent Wet Disc Clutch, Electro-hydraulic Engagement

HYDRAULIC SYSTEM
- 2 Mechanically Controlled Spool Valves
  (1 x DA KO FL + 1 x DA KO FL)
- Implement System:
  Open Center System, Engine Driven Gear Pump
  17.1 GPM (65 LPM) Flow
  Optional Cable-controlled Loader Joystick
  with Mid Valves and 3rd Function Ready Buttons
- Rear Linkage:
  ASAE Category II with Telescopic Ball Ends
  Lift Capacity at 24": 4850 LBS (2200 KG)
  2 Adjustable Rear Linkage Turnbuckles
- Standard Telescopic Stabilizers
- Swing Straight Drawbar with 350/400/500mm Positions,

ELECTRICAL
- 12 Volt DC, Negative Ground
- Intake Air Pre Heater
- High Capacity Wet Charge, Maintenance Free SAE 720 CCA Battery
- 80 AMP Alternator
- Ignition: Key with Safety Start
- Keyed Engine Shutoff
- Lighting: 4 Headlights, 2 Rear Marker Light Assemblies
- Mid Mounted Work Lights
- Rear Brake Lights
- Standard 1 Rear Work Light
- 7 Pin ASAE Outlet Socket
- 30 Amp Auxiliary Electrical Socket

INSTRUMENTS
- Digital & Analog Instrument Panel with Performance Monitor
- Analog Engine Tachometer
- Analog Fuel Gauge
- Analog Engine Temperature
- Digital Transmission Display
- Digital Hour Meter
- Operation and Service Lights

OPERATOR ENVIRONMENT (CAB MODELS)
- Standard Cab Roof, HVAC with Manual Controls, 2 Low Mounted Doors, Antenna & Speakers
- 2 Front and 2 Rear Roof Mounted Work Lights
- Pull-down Sun Shade
- Lever Controlled 3-Point Linkage with Draft Control
- Rubber Floor Mat
- Telescopic Large Side Mirrors
- Internal Mirror
- Dual Adjustment Steering Column (Tilting and Telescopic)
- Mechanical Swiveling Seat with Armrests
- Retractable Seat Belt
- Instructor's Seat with Seatbelt
- Cup Holder
- Pendant Style (Suspended) Foot Pedals
- Hand Rails
- Hand and Foot Throttle
- Left Side and Right Side Foot Step Entry
- External 3-Point Lift Control on Left and Right Hand Fenders
- Rear Wiper/Washer

OTHER STANDARD FEATURES
- Fuel Tank Under Platform, Ground Fill
  Fuel Capacity: 27.7 Gallons (105 Liters)
- One-Piece Tilting Hood
- Rear Fender Side Extensions - 100mm
- Fuel Tank Guard
- Tool Box
- SMV Sign

MF 4700 CAB

MASSEY FERGUSON®

(F.O.B. PORT OF ENTRY)

LOADER FEATURES

MF931X LOADER

- One Piece Main Frame with Tapered Arms and Single Cross Member
- Quick Attach Loader Frame Mount with Pin Lock
- Built-in Parking Stands
- (2) 2.8 inch (70 mm) Double Acting Lift Cylinders
- (2) 2.8 inch (70 mm) Double Acting Bucket Cylinders
- Hydraulic Lines Routed Inside Main Frame for Protection and Visibility
- Galvanized Steel Bushings with Recessed Grease Points
- Standard with Flat Face Couplers
- Rated on MF4610 Tractor with 11.2-24 Front Tires and 16.9-30 Rear Tires
- Powder Painted with Corrosion Protection
- Bucket Level Indicator
- Lift Capacity to Full Height @ 31.5 inches Forward of Pivot Pin: 2140 lbs
- Maximum Lift Height: 136 inches at Pivot
- Breakout Force @ 31.5 inches Forward of Pivot Pin: 3540 lbs
- Rated Hydraulic Pressure: 2828 PSI
- Maximum Roll Back Angle: 44 Degrees
- Maximum Dump Angle: 50 Degrees

MFFL.3522 LOADER

- One Piece 4 mm High Tensile Main Frame with Tapered and Emboss Arms
- Quick Attach Implement Mounting with Euro Style Single Lever Locking System
- 82 mm Arm Profile
- 80 mm Double Acting Lift Cylinders
- 75 mm Double Acting, Equal Displacement Bucket Cylinders
- Industrial Grade Hydraulic Fittings and Twin Braided Hoses, Incorporated Internally Inside Loader Boom
- Central Valve, Equalized Oil Distribution Valve with Incorporated Relief Valves
- 4-Flat Face Hydraulic Tips on Boom and Bucket Circuits
- Protective Hose Cover
- Lock and Go Loader/Subframe Connection System
- Pivots Are Greasable and Include Industrial Grade Pins and Bushings
- Powder Painted with Corrosion Protection
- Bucket Level Indicator
- Front Bumper Guard (With Subframe Set)
- Buckets Have Heavy Duty, Welded-On Cutting Edge, Box Beam Section for Stiffness and Torsional Rigidity and Lateral Reinforcing Bars
- 140" (3.55 m) Lift Height to Pivot Pin
- **FL.3522:** 2760 lb. (1252 kg) Lift Capacity to Full Height, 31.5" (800 mm) Forward of Pivot Pin per ASABE 301.3 @ 2828 PSI
- Maximum Roll Back Angle: 58 Degrees
- Maximum Dump Angle: 58 Degrees

MFFL.3615 LOADER

- One Piece 4 mm High Tensile Main Frame with Tapered and Emboss Arms
- Quick Attach Implement Mounting with Euro Style Single Lever Locking System
- 82 mm Arm Profile
- 70 mm Double Acting Lift Cylinders
- 75 mm Double Acting, Equal Displacement Bucket Cylinders
- Industrial Grade Hydraulic Fittings and Twin Braided Hoses, Incorporated Internally Inside Loader Boom
- Central Valve, Equalized Oil Distribution Valve with Incorporated Relief Valves
- 4-Flat Face Hydraulic Tips on Boom and Bucket Circuits
- Protective Hose Cover
- Lock and Go Loader/Subframe Connection System
- Pivots Are Greasable and Include Industrial Grade Pins and Bushings
- Powder Painted with Corrosion Protection
- Bucket Level Indicator
- Front Bumper Guard (With Subframe Set)
- Buckets Have Heavy Duty, Welded-On Cutting Edge, Box Beam Section for Stiffness and Torsional Rigidity and Lateral Reinforcing Bars
- 140" (3.55 m) Lift Height to Pivot Pin
- **FL.3615:** 3420 lb. (1551 kg) Lift Capacity to Full Height, 31.5" (800 mm) Forward of Pivot Pin per ASABE 301.3 @ 2828 PSI
- Maximum Roll Back Angle: 58 Degrees
- Maximum Dump Angle: 58 Degrees

MF 4700 CAB

MASSEY FERGUSON®

(F.O.B. PORT OF ENTRY)

Feature Code	Description	Factory Code	Approx. Weight (lb.)	List Price

ONE FEATURE CODE FROM EACH GROUP MUST BE SPECIFIED (Unless In Base Option is Desired)

Certain options will require extended lead times from factory and are so noted.

BASE MACHINE

Deluxe Edition, Cab

2WD: (Extended Factory Lead Time Approximately 160 Day)

MF4707~ES	Massey Ferguson 4707	40C43353		51,004.00
MF4708~ES	Massey Ferguson 4708	25C50086		58,925.00
MF4709~ES	Massey Ferguson 4709	55C51937		61,103.00
MF4710~ES	Massey Ferguson 4710	25C53741		63,225.00

4WD:

MF4707~ES	Massey Ferguson 4707	75C47119		55,435.00
MF4708~ES	Massey Ferguson 4708	90C53816		63,314.00
MF4709~ES	Massey Ferguson 4709	30C55418		65,198.00
MF4710~ES	Massey Ferguson 4710	05C57437		67,573.00

ALL Tractors will be charged $325 for Assembly

TRANSMISSION

25-EA704/EC017	12 x 12 Synchro Power Shuttle, 18 MPH (30 KPH)			**In Base for 2wd**
25-EA706/EC017	12 x 12 Synchro Power Shuttle, 25 MPH (40 KPH)			**In Base for 4wd**
25-G1110	Dyna-2 24 x 24 Speedmatching - Power Shuttle with Brake to Neutral, 25 MPH (40 KPH) 4wd Models Only **(Available Spring 2021)**	25C1364		1,605.00

CREEPER GEAR

35-EN000	Without Creeper Gear			**In Base**
35-EN002	Creeper Gear (13.68:1 Reduction) - 4wd Models Only **(Extended Factory Lead Time Approximately 160 Days)**	20C1251		1,472.00

AUXILIARY VALVES

50-KX032	2 Mechanically Controlled Spool Valves, (1 x DA KO FL + 1 x DA KO FL)			**In Base**
50-KX050	3 Mechanically Controlled Spool Valves, (1 x DA KO FL + 1 x DA KO FL + 1 x DA FD KO FL + Free Flow Return) (Option only Available for 4wd Cab Models)	45C1000		1,177.00

PTO

100-LA108	540/540E RPM PTO, External Control, 540 RPM 6 Spline Non-Flanged Shaft			**In Base**
100-LA110	540/1000 RPM Dual Speed PTO, External Control, with 6 and 21 Spline Flange PTO Shafts (Available for MF4710 Only)	55C257		303.00

MF 4700 CAB

MASSEY FERGUSON®

(F.O.B. PORT OF ENTRY)

Feature Code	Description	Factory Code	Approx. Weight (lb.)	List Price
CAB				
140-AI019	Standard Cab			**In Base**
140-E1040	VisioRoof with FOPS (Available as an Option for 4wd Deluxe Only) **(Extended Factory Lead Time Approximately 160 Days)**	60C438		516.00
SEAT				
125-AE019	Mechanical Swiveling Seat with Armrests			**In Base**
125-AE026	Air Suspended Swivel Seat with Armrests	15C730		859.00
LOADER PROVISION				
350-LL000	Without Loader Provision			**In Base**
350-LL001	Front Loader Provision includes Frame Rails, Uprights, Subframe, Hydraulic Kit with Joystick with Valve and 3rd Function Ready Buttons, and Grille Guard	10C2113		2,486.00

(F.O.B. PORT OF ENTRY)

Feature Code	Description	Factory Code	Approx. Weight (lb.)	List Price
TIRE BRAND SELECTION				
70-Base	Trelleborg Brand			No Charge

NOTE: Tire Options not In Base or W1841 are Subject to Extended Factory Lead Time of Approximately 120 Days (Rear Wheel Weights not available when ordering shipping wheels)

FRONT AND REAR TIRES FOR 4707, 4708 AND 4709

2WD - Flange Axle - Set of 2

75-W1835	Rear: 420/85R30 (16.9R30) R1W Front: 9.5L-15 F2 Fixed			**In Base**
75-W1837	Rear: 460/85R30 (18.4R30) R1W Front: 9.5L-15 F2 Fixed	80C329		388.00
75-W1836	Rear: 420/85R34 (16.9R34) R1W Front: 9.5L-15 F2 Fixed	30C542		638.00
75-W5990	Rear Shipping Wheel Front Shipping Wheel	(05C2680)		(3,153.00)

4WD - Flange Axle - Set of 2

75-W1839	Rear: 420/85R30 (16.9R30) R1W Front: 320/85R24 (12.4R24) R1W			**In Base**
75-W1841	Rear: 460/85R30 (18.4R30) R1W Front: 340/85R24 (13.6R24) R1W	40C479		564.00
75-W1840	Rear: 420/85R34 (16.9R34) R1W Front: 340/85R24 (13.6R24) R1W	90C691		814.00
75-W5990	Rear Shipping Wheel Front Shipping Wheel	(40C3658)		(4,304.00)

(F.O.B. PORT OF ENTRY)

Feature Code	Description	Factory Code	Approx. Weight (lb.)	List Price

NOTE: The tires listed below can only be ordered once the factory shipping wheel option is selected. The price deduct for the shipping wheels will be netted with the list price increase for the tire configurations shown below, on the tractor invoice. The tire configurations shown below will be installed at the Assembly Center and delivered to the dealer. The shipping wheels will not be delivered separately to the dealer, only the Low Profile Wheels & Tires will be. The process must work this way for internal systems reasons.

The tire and wheel combinations shown below are NOT compatible with a "Global Series" rear wheel weight.

FRONT AND REAR TIRES FOR 4707, 4708 AND 4709

4WD - Flange Axle - Set of 2

ACTWLS1	Rear: 19.5L-24 10 Ply R4 Front: 12.5/80-18 14 Ply R4	20C2747		3,232.00
ACTWLS3	Rear: 18.4-26 12 Ply R1 Front: 11.2-24 8 Ply R1	30C3279		3,858.00

(F.O.B. PORT OF ENTRY)

Feature Code	Description	Factory Code	Approx. Weight (lb.)	List Price
FRONT AND REAR TIRES FOR 4710				
	2WD - Flange Axle - Set of 2			
75-W1836	Rear: 420/85R34 (16.9R34) R1W Front: 9.5L-15 F2 Fixed			**In Base**
75-W1837	Rear: 460/85R30 (18.4R30) R1W Front: 9.5L-15 F2 Fixed	(50C195)		(230.00)
75-W1834	Rear: 15.5R38 R1W Front: 9.5L-15 F2 Fixed	00C170		200.00
75-W5990	Rear Shipping Wheel Front Shipping Wheel	(60C3192)		(3,756.00)
	4WD - Flange Axle - Set of 2			
75-W1840	Rear: 420/85R34 (16.9R34) R1W Front: 340/85R24 (13.6R24) R1W			**In Base**
75-W1839	Rear: 420/85R30 (16.9R30) R1W Front: 320/85R24 (12.4R24) R1W	(10C634)		(746.00)
75-W1841	Rear: 460/85R30 (18.4R30) R1W Front: 340/85R24 (13.6R24) R1W	(50C195)		(230.00)
75-W1838	Rear: 15.5R38 R1W Front: 340/85R24 (13.6R24) R1W	00C170		200.00
75-W5990	Rear Shipping Wheel Front Shipping Wheel	(00C4318)		(5,080.00)

(F.O.B. PORT OF ENTRY)

Feature Code	Description	Factory Code	Approx. Weight (lb.)	List Price

NOTE: The tires listed below can only be ordered once the factory shipping wheel option is selected. The price deduct for the shipping wheels will be netted with the list price increase for the tire configurations shown below, on the tractor invoice. The tire configurations shown below will be installed at the Assembly Center and delivered to the dealer. The shipping wheels will not be delivered separately to the dealer, only the Low Profile Wheels & Tires will be. The process must work this way for internal systems reasons.

The tire and wheel combinations shown below are NOT compatible with a "Global Series" rear wheel weight.

FRONT AND REAR TIRES FOR 4710

4WD - Flange Axle - Set of 2

ACTWLS1	Rear: 19.5L-24 10 Ply R4 Front: 12.5/80-18 14 Ply R4	20C2747		3,232.00
ACTWLS3	Rear: 18.4-26 12 Ply R1 Front: 11.2-24 8 Ply R1	30C3279		3,858.00

MF 4700 CAB

(F.O.B. PORT OF ENTRY)

Feature Code	Description	Factory Code	Approx. Weight (lb.)	List Price
LOADER OPTIONS				
For Factory Loader Ready Tractors - Requires LL001				
Non Self-Leveling for 4707-4710				
7296207	MF931X Loader - Skid Steer Style	20C3376	775	3,972.00
7296384	MFFL.3522 Loader - Euro Style with 4 Flat Face 3/8-inch. Couplers, Includes Soft Drive with Electric Shutoff	40C4508		5,304.00
Mechanical Self-Leveling for 4707-4710				
7296395	MFFL.3615 Loader - Skid Steer Style with 4 Flat Face 3/8-inch. Couplers and 12 Pin Connection, Includes Soft Drive with Electric Shutoff	40C5341		6,284.00
7296393	MFFL.3615 Loader - Euro Style with 4 Flat Face 3/8-inch. Couplers and 12 Pin Connection, Includes Soft Drive with Electric Shutoff	40C5341		6,284.00
BUCKET OPTIONS - Recommended with Loader Packages Only				
Skid Steer Style				
72533150ML	72-inch Skid Steer Material Bucket 180U, 17 cu ft	25C531	390	625.00
72533151ML	84-inch Skid Steer Material Bucket 210U, 19 cu ft	90C657	437	774.00
72537004ML	83-inch Heavy Duty Skid Steer Material Bucket - SM 210 (Recommended for MFFL.3522 or .3615 Loader)	15C968		1,139.00
Euro Style				
72533685ML	72-inch Euro Style Material Bucket 180U, 17 cu ft	20C571	390	672.00
72533686ML	84-inch Euro Style Material Bucket 210U, 19 cu ft	60C727	437	856.00
72537006ML	83-inch Euro Style Material Bucket - GM 215 (Recommended for MFFL.3615 Loader)	79C1098		1,427.00
MISCELLANEOUS				
275-TC025	English Language Operator's Manual - 4700 Cab Tractor			**In Base**
ASSEMBLY CENTER MISCELLANEOUS OPTIONS				
ACWTPKG1	100kg Weight Adapter Package	95C257		335.00
ACWTPKG2	100kg Stackable Rear Wheel Weight Package (order quantity 1 or 2) (Requires Adapter Package ACWTPKG1 to Install)	95C257		335.00
FROPML3	French Language Operator Manual - 4700 Cab Tractor			No Charge

FIELD ACCESSORIES

MASSEY FERGUSON®

Please order these accessories through the AGCO Parts Division. Consult the parts ordering system using oneAGCO Solutions-Online to determine current availability and pricing.

CATALOG NUMBER	DESCRIPTION	4707	4708	4709	4710	NOTES
HYDRAULICS						
	3rd Remote Valve, Double Acting Float with Kickout and Flow Divider. Requires 4392850M14 (Platform) or ACW1235740 (Cab) Only Available from 2 to 3 Valves.	X	X	X	X	Note: 3rd valve kits can only be used on tractors that were received from the factory with 2 valves installed. This kit will not work if the 2nd valve was field installed. For all inquiries on additional valves for Global Series tractors, please contact the AGCO Parts Division. Valves are Serial Number specific.
	3rd Remote Valve Control Lever for Platform	X	X	X	X	Note: 3rd valve kits can only be used on tractors that were received from the factory with 2 valves installed. This kit will not work if the 2nd valve was field installed. For all inquiries on additional valves for Global Series tractors, please contact the AGCO Parts Division. Valves are Serial Number specific.
	3rd Remote Valve Control Lever for Cab	X	X	X	X	Note: 3rd valve kits can only be used on tractors that were received from the factory with 2 valves installed. This kit will not work if the 2nd valve was field installed. For all inquiries on additional valves for Global Series tractors, please contact the AGCO Parts Division. Valves are Serial Number specific.
4305981M1	Cat 2 to Cat 1 Top Link Bushing	X	X	X	X	
4305971M1	Cat 2 to Cat 1 Lower Link Bushing (order two)	X	X	X	X	
WEIGHTS & WHEEL EQUIPMENT						
4349427M2	55 KG Front Weight - Single Weight	X	X	X	X	
ACW002695A	Front End Weight Hardware for 55 KG	X	X	X	X	Weights ordered separately
ACW012805A	Single Rear Wheel Weight Adapter Hub (50 KG)	X	X	X	X	Requires Hardware Kit ACW0392850 - One Kit per Adapter
ACW0392850	Single Rear Wheel Weight Adapter Hub Hardware Kit	X	X	X	X	One Kit Required per Adapter
ACW0128080	Single Rear Wheel Weight (50 KG)	X	X	X	X	Requires 3009243X1 Hardware Kit and ACW012805A Adapter Weight. Requires adapter to be installed first. Multiple weights can be stacked.
ACX2448030	Single Rear Wheel Weight Hardware Kit (50 KG) Qty 4	X	X	X	X	Each weight requires Qty 4 to install

FIELD ACCESSORIES

MASSEY FERGUSON®

Please order these accessories through the AGCO Parts Division. Consult the parts ordering system using oneAGCO Solutions-Online to determine current availability and pricing.

CATALOG NUMBER	DESCRIPTION	4707	4708	4709	4710	NOTES
MISCELLANEOUS						
ACW0026370	Front Tow Hitch and Front Tow Pin	X	X	X	X	
ACW0089550	Nose Grille Guard	X	X	X	X	
ACW2200260	Block Heater (110V)	X	X	X	X	
ACW085956A	Fuel Filter Heater	X	X	X	X	Also available for MF5700 / 6700 Global Series Requires Qty 1 593386D1 Note: Prevents fuel filter gelling in extreme cold temperatures
ACW1735330	Fuel Tank Shield, Semi-Platform	X	X	X	X	
4385513M1	Lockable Fuel Cap with Key	X	X	X	X	
ACW0141220	Lockable DEF Cap with Key	X	X	X	X	
ACW002869B	Sun Canopy	X	X	X	X	FOPS Compliant
ACW0038210	Armrests	X	X	X	X	
3617848M91	Cigar/Cigarette Heater Element	X	X	X	X	For Cab Models Only - Male heater element that fits into Cigar Socket
ACW0929370	355mm Plastic Front Fender	X	X	X	X	Requires Hardware Kit ACW0929490
ACW0929310	410mm Plastic Front Fender	X	X	X	X	Requires Hardware Kit ACW0929490
ACW0927320	470mm Plastic Front Fender	X	X	X	X	Requires Hardware Kit ACW0929490
ACW0929490	Pivoting Front Fenders Hardware Kit, <1200mm (47")	X	X	X	X	
ACW0929500	Pivoting Front Fenders Hardware Kit, >1200mm (47")	X	X	X	X	
ACW002806E	Rotating Beacon Light	X	X	X	X	For Platform Models Only
ACW0667950	Telemetry	X	X	X	X	

MASSEY FERGUSON®

4600M Series

SPECIALTY

MF4610M HC

MASSEY FERGUSON®

(F.O.B. PORT OF ENTRY)

TRACTOR FEATURES

ENGINE SYSTEM
- Engine: AGCO Power 33AWIC 3 Cylinder (Turbocharged)
  100 Max Engine HP (75 kW) @ 2,000 RPM
  99 Rated Engine HP (74 kW) @ 2200 RPM
  80 PTO HP (59.7 kW) @ 2000 RPM
- EPA Tier 4 Final Compliant with SCR, CARB Certified
- Air Cleaner: Dual Element Dry Type
- Air Cleaner Intake, Under Hood
- Vertical Exhaust, A Pillar
- Cooling System: Antifreeze 50/50 Mix
- Cold Starting Aid: Intake Heater

FRONT AXLE
- 4wd: Center Driveline, Open Differential, Mechanical Engagement

POWER TRAIN
- Transmission:
  12 x 12 Power Shuttle with Creeper and Left Hand Shuttle Lever (12 Standard Speeds/6 Creeper Speeds)
  6 Synchronized Gears, 3 Ranges
  Wet Multi-disc Clutch with Left Side Clutch Pedal
  Forward and Reverse Modulation Dial
- Rear Axle: Drop Down Outboard Planetary Final Drives, with Foot Operated Mechanical Differential Lock
- Brakes: Independent Oil Immersed Wet Disc Brakes with Independent Foot Pedal Operation
- Hook and Lever Parking Brake
- PTO: Independent 540/540E Speeds, 6 Spline Shaft (1.375 In. Diameter), Independent Wet Disc Clutch, Electro-hydraulic Engagement

HYDRAULIC SYSTEM
- Steering: Hydrostatic, Adjustable Tilt Steering Column
- Implement System:
  Open Center System, Engine Driven Gear Pump
  17.5 GPM (66.2 LPM) flow to Remotes
- Rear Linkage:
- ASAE Category II with Telescopic Ball Ends
  Shared Pump with Implements
  Lift assist cylinder
- Lift Capacity at 24": 4409 lbs (1999 kg)***
  Transporting oversized, specialty implements at high speed can lead to axle/linkage damage. Consult AGCO Account Manager for 3PH limitations
  Adjustable Lift Rod, Turn Buckle Top Link
  Telescopic Stabilizers
- Drawbar with Clevis

ELECTRICAL
- 12 Volt DC, Negative Ground
- Intake Air Pre Heater
- Wet, Maintenance Free 590 CCA Battery
  95 AMP Alternator
- Ignition: Key with Safety Start
- Keyed Engine Shutoff
- Lighting: 4 Headlights, 2 Rear Marker Light Assemblies
- 7 Pin ASAE Outlet Socket

INSTRUMENTS
- Digital 4WD Display
- Digital and Analog Dash Display
- Digital Engine Tachometer
- Digital Fuel Gauge
- Digital Engine Temperature
- Digital Transmission Display
- Digital Hour Meter
- Operation and Service Lights

OPERATORS ENVIRONMENT (Platform Models)
- Flat Floor Platform
- Folding ROPS
- Seat: Adjustable Spring Cushion Vinyl
- Retractable Seat Belt
- Pendant Style (Suspended) Foot Pedals
- Comfort Control Dial for Shuttle Aggressiveness
- Hand and Foot Throttle
- Left Side Foot Steps
- Rear Work Lamp

OTHER STANDARD FEATURES
- Front Weight Bracket
- Fuel Tank Under Platform, Ground Fill
  Fuel Capacity: 30.4 gallons (115 Liters)
- One-Piece Tilting Hood
- Tool Box
- SMV Emblem

MF4610M HC

(F.O.B. PORT OF ENTRY)

MASSEY FERGUSON®

Order Code	Catalog Number	Description	Factory Code	List Price
ORDER TRACTOR THEN ORDER ONE CODE FROM GROUP 02 THROUGH 09 AS REQUIRED				
BASE MACHINE				**GROUP 01**
MF4610M-H6	72530505	MF4610M HC High Clearance Base 60"	60C51812	60,956.00
MF4610M-H8	72530506	MF4610M HC High Clearance Base 80"	15C52733	62,039.00
		ALL Tractors will be charged $325 for Assembly		
		****Dealers serviced by assembly centers other than Tacoma will be subject to an additional freight surcharge and extended delivery lead times.****		
OPERATOR ENVIRONMENT				**GROUP 02**
RE3	72530444	Platform		In Base
FRONT AXLE				**GROUP 03**
F	72530448	4wd Front Axle		In Base
TRANSMISSION				**GROUP 04**
L	72530510	12 x 12 Hydraulic Shuttle with Creeper Gear (12 Standard Speeds / 6 Creeper Speeds)		In Base
HYDRAULICS				**GROUP 05**
K	72530511	1 Float + Kickout Valve and 1 Float Valve		In Base
REAR AND FRONT TIRES				**GROUP 06**
	4WD Tires			
	72530501	R: 230/95R48 F: 230/95R48	80C6687	7,868.00
	72530502	R: 13.6-38 F: 13.6-38	75C4160	4,895.00
OPTIONS				**GROUP 07**
	5020187M	Front Suitcase Weight Package, 10 x 55kg (121 lbs) Installed @ Assembly Center	30C1532	1,990.00
	72530508AM	80" Conversion Kit - Field Installed	45C2547	2,997.00

MASSEY FERGUSON®

FIELD ACCESSORIES

Please order these accessories through the AGCO Parts Division.
Consult the parts ordering system using oneAGCO Solutions-Online to determine current availability and pricing.

CATALOG NUMBER	DESCRIPTION	4610M HC	NOTES
WEIGHTS & WHEEL EQUIPMENT			
3784628M93	Individual Front Weight 121 lbs (55 kg)	X	Up to 8 Front Weights Maximum
MISCELLANEOUS			
V836640935	Block Heater	X	
312013903	Fiberglass Canopy	X	For Platform Tractors only, attaches to ROPS
7066708M91	High-back Seat (Platform)	X	Attached to existing seat, raises seat back height
ACW0141220	Lockable DEF Cap	X	
7073865M1	35L Aux Fuel Tank	X	
7073995M91	Draft Control Kit (ROPS)	X	

MASSEY FERGUSON®

MF 5700
GLOBAL SERIES

MASSEY FERGUSON®

MF 5700 PLATFORM

(F.O.B. PORT OF ENTRY)

TRACTOR FEATURES

ENGINE SYSTEM
- 4.4L 4-Cylinder AGCO Power
- EPA Tier 4 Final and CARB Certified
- Air Cleaner: Dual Element Dry Type
- Air Cleaner Intake, Under Hood
- Vertical Exhaust
- Cooling System: Antifreeze 50/50 Mix
- Cold Starting Aid: Intake Heater

HORSEPOWER
(Max Engine @ 2000 RPM; Rated Engine & PTO @ 2200 RPM)

MF5710 Deluxe Powershuttle:
100 Max Engine HP, 95 Engine HP, 79 PTO HP

MF5711 Deluxe Powershuttle:
110 Max Engine HP, 105 Engine HP, 89 PTO HP

FRONT AXLE
- 4wd: Dana 720 Center Driveline, Open Differential, Standard Hydraulically Actuated Differential Lock Push Button 4WD Engagement

POWERTRAIN
- Transmission: 25 mph (40 kph) 12 X 12 Synchro Power Shuttle (6 Gears, 2 Ranges with Declutch on Main Gear Lever)
- Rear Axle: Inboard Planetary Final Drives, with Push Button Operated Mechanical Differential Lock, Flanged Rear Axle
- Brakes: Independent Oil Immersed Wet Disc Brakes with Independent Foot Pedal Operation
- Hook and Lever Parking Brake
- PTO: Independent 540/540E/1000 RPM Flanged PTO, Internal Control, 6 and 21 Spline Shafts (1.375 In. Diameter), Independent Wet Disc Clutch, Electro-hydraulic Engagement

HYDRAULIC SYSTEM
- Implement System: Open Center System, Engine Driven Gear Pump, 15.1 GPM (57 LPM), combined to 26 GPM (98 L/min) Flow Optional Cable-controlled Loader Joystick with Mid Valves
- 2 Mechanical Controlled Spool Valves (1 x DA KO FL + 1 x DA KO FL)
- Rear Linkage: ASAE Category II with Telescopic Ball Ends Lift Capacity at 24": 7716 lbs (3500 kg) 2 Adjustable Rear Linkage Turnbuckles Standard Telescopic Stabilizers
- Swing Offset Drawbar with 350/400/500mm Positions, Cat 2 Clevis

ELECTRICAL
- 12 Volt DC, Negative Ground
- Intake Air Pre Heater
- High Capacity Wet Charge, Maintenance Free SAE 720 CCA Battery
- 80 AMP Alternator
- Ignition: Key with Safety Start
- Keyed Engine Shutoff
- Lighting: 4 Headlights, 2 Rear Marker Light Assemblies
- Mid Mounted Work Lights
- Engine RPM Memory Switch
- Rear Brake Lights
- Standard 1 Rear Work Light
- 7 Pin ASAE Outlet Socket
- 30 Amp Auxiliary Electrical Socket

INSTRUMENTS
- Digital & Analog Instrument Panel with Performance Monitor
- Analog Engine Tachometer
- Analog Fuel Gauge
- Analog Engine Temperature
- Digital Transmission Display
- Digital Hour Meter
- Operation and Service Lights

OPERATOR ENVIRONMENT (PLATFORM MODELS)
- Flat Floor Platform - ISO Mounted
- Rubber Floor Mat
- Hand Rails with Glass Heat Shields
- Lever Controlled 3-Point Linkage with Easy Lift/Lower Option and Draft Control
- 2 Post Folding ROPS
- Tilt Steering Column
- Seat: Mechanical Spring Suspension with Armrests
- Retractable Seat Belt
- Cup Holder
- Pendant Style (Suspended) Foot Pedals
- Hand and Foot Throttle
- Left Side and Right Side Foot Step Entry
- External 3-Point Lift Control on Left Hand Side Fender

OTHER STANDARD FEATURES
- One-Piece Tilting Hood
- Rear Fender Side Extensions
- Fuel Tank Guard
- Tool Box
- SMV Sign

MF 5700 PLATFORM

MASSEY FERGUSON®

(F.O.B. PORT OF ENTRY)

LOADER FEATURES

MF941X AND MF946X LOADERS
FITS ALL MF5700 / MF6700 GLOBAL SERIES TRACTORS

- One Piece Main Frame with Tapered Arms and Single Cross Member, Powder Painted with Corrosion Protection
- Quick Attach Loader Frame Mount with Pin Lock and Built in Parking Stands
- 5 mm High Tensile, Tapered Box Section Frame
- 70 mm Arm Profile
- 75 mm Double Acting Lift Cylinders **(MF941X)**
- 70 mm Double Acting Lift Cylinders **(MF946X)**
- 75 mm Double Acting Bucket Cylinders **(MF941X)**
- 75 mm Double Acting Bucket Cylinders, Equal Displacement **(MF946X)**
- Hydraulic Lines Routed Inside Main Frame for Protection and Visibility
- Pivots have Recessed Greasable Galvanized Steel Pins with Bushings at Key Points
- 4-Flat Face Hydraulic Tips on Boom and Bucket Circuits
- Protective Hose Cover
- Bucket Level Indicator
- **MF941X:** 2220 lbs (1007 kg) Lift Capacity to Full Height, 31.5 inches, (800 mm) Forward of Pivot Pin per ASABE 301.3 at 2828 PSI
- **MF946X:** 3500 lbs (1588 kg) Lift Capacity to Full Height, 31.5 inches, (800 mm) Forward of Pivot Pin per ASABE 301.3 at 2828 PSI
- Maximum Lift Height: 148 inches at Pivot
- Rated Hydraulic Pressure: 2828 PSI
- Maximum Roll Back Angle: 49 Degrees
- Maximum Dump Angle: 42 Degrees
- Universal Euro Hook Type Implement Attachments
- Grille Guard Standard

MFFL.3723 AND MFFL.3819 LOADERS
FITS ALL MF5700 / MF6700 GLOBAL SERIES TRACTORS

- One Piece 5 mm High Tensile Main Frame with Tapered and Emboss Arms
- Quick Attach Implement Mounting with Euro Style Single Lever Locking System
- 80 mm Arm Profile
- 80 mm Double Acting Lift Cylinders **(FL.3723)**
- 75 mm Double Acting Lift Cylinders **(FL.3819)**
- 80 mm Double Acting Bucket Cylinders **(FL.3723)**
- 80 mm Double Acting, Equal Displacement Bucket Cylinders **(FL.3819)**
- Industrial Grade Hydraulic Fittings and Twin Braided Hoses, Incorporated Internally Inside Loader Boom
- Central Valve, Equalized Oil Distribution Valve with Incorporated Relief Valves
- 4-Flat Face Hydraulic Tips on Boom and Bucket Circuits
- Protective Hose Cover
- Powder Painted with Corrosion Protection
- Bucket Level Indicator
- Lock and Go Loader / Subframe Connection System
- Pivots Are Greasable and Include Industrial Grade Pins and Bushings
- Front Bumper Guard (with Subframe Set)
- Buckets Have Heavy Duty, Welded-On Cutting Edge, Box Beam Section for Stiffness and Torsional Rigidity and Lateral Reinforcing Bars
- 149" (3.79 m) Lift Height to Pivot Pin
- **FL.3723**: 2840 lbs (1288 kg) Lift Capacity to Full Height, 31.5",(800 mm) Forward of Pivot Pin per ASABE 301.3 @ 2828 PSI
- **FL.3819**: 4230 lbs (1919 kg) Lift Capacity to Full Height, 31.5", (800 mm) Forward of Pivot Pin per ASABE 301.3 @ 2828 PSI
- Maximum Roll Back Angle: 58 Degrees
- Maximum Dump Angle: 60 Degrees

MASSEY FERGUSON®

MF 5700 PLATFORM

(F.O.B. PORT OF ENTRY)

Feature Code	Description	Factory Code	Approx. Weight (lb.)	List Price

ONE *FEATURE CODE* FROM EACH GROUP MUST BE SPECIFIED (Unless In Base Option is Desired)

BASE MACHINE

DELUXE PLATFORM MODELS

4WD

MF5710~ES	Massey Ferguson 5710	46C52358		67,998.00
MF5711~ES	Massey Ferguson 5711	92C54589		70,896.00

ALL Tractors will be charged $325 for Assembly

LOADER PROVISION

350-LL000	Without Loader Provision			**In Base**
350-LL001	Front Loader Provision includes Frame Rails, Uprights, Subframe, Hydraulic Kit with Joystick and Valve, and Grille Guard	16C3548		4,608.00

LOADER OPTIONS (For Additional Loader Options, Refer to Implements Price List Revision)

Note: MF941X/946X Loaders are not Compatible with 28-inch Front Tires

For Factory Loader Ready Tractors - Requires LL001

Non Self-Leveling

7296139	MF941X Loader - Euro Style, w/Hose Extension Kit.	89C4651	794	6,033.00
7296239	MFFL.3723 Loader - Euro Style, Includes Soft Drive with Electric Shutoff and Hose Extension Kit	64C5840		7,552.00

Mechanical Self-Leveling

7296143	MF946X Loader - Euro Style, with Hose Extension Kit	29C5514	926	7,153.00
7296235	MFFL.3819 Loader - Euro Style, Includes Soft Drive with Electric Shutoff and Hose Extension Kit	99C7422		9,607.00

BUCKET OPTIONS - Recommended with Loader Packages Only

Euro Style

72537003ML	83-inch Heavy Duty Material Bucket - SM 210 (Recommended for MF941X-946X Loaders)	75C981		1,155.00
72537006ML	83-inch Material Bucket - GM 215 (Recommended for MFFL.3723 or .3819 Loaders)	79C1098		1,427.00

(F.O.B. PORT OF ENTRY)

Feature Code	Description	Factory Code	Approx. Weight (lb.)	List Price
TIRE BRAND SELECTION				
70-Base	Trelleborg Brand			No Charge
FRONT AND REAR TIRES				
	NOTE: Tire Options not In Base are Subject to Extended Factory Lead Time of Approximately 120 Days			
	4WD - Flange Axle - Set of 2			
TIRES FOR 5710 AND 5711				
75-W1880	Rear: 460/85R34 (18.4R34) R1W Front: 380/85R24 (14.9R24) R1W			**In Base**
75-W1840	Rear: 420/85R34 (16.9R34) R1W Front: 340/85R24 (13.6R24) R1W	(59C667)		(867.00)
75-W1886	Rear: 420/85R38 (16.9R38) R1W Front: 340/85R28 (13.6R28) R1W	(09C090)		(117.00)
	Note: 28-inch Front Tires are not Compatible with MF941X/946X Loaders			
75-W5990	Rear Shipping Wheel Front Shipping Wheel	(48C4638)		(6,024.00)

MF 5700 PLATFORM

(F.O.B. PORT OF ENTRY)

Feature Code	Description	Factory Code	Approx. Weight (lb.)	List Price
MISCELLANEOUS				
275-TC025	Base English Language Operator's Manual - 5700 Platform Tractor			**In Base**
ASSEMBLY CENTER MISCELLANEOUS OPTIONS				
ACWTPKG1	100kg Weight Adapter Package	95C257		335.00
ACWTPKG2	100kg Stackable Rear Wheel Weight Package (order quantity 1 or 2) (Requires Adapter Package ACWTPKG1 to Install)	95C257		335.00
FROPML4	French Language Operator Manual - 5700 Platform Tractor			No Charge

MF 5700 CAB

MASSEY FERGUSON®

(F.O.B. PORT OF ENTRY)

TRACTOR FEATURES

ENGINE SYSTEM
- 4.4L 4-Cylinder AGCO Power
- EPA Tier 4 Final and CARB Certified
- Air Cleaner: Dual Element Dry Type
- Air Cleaner Intake, Under Hood
- A-Pillar Exhaust with Heat Shield
- Cooling System: Antifreeze 50/50 Mix
- Cold Starting Aid: Intake Heater

HORSEPOWER
(Max Engine @ 2000 RPM; Rated Engine & PTO @ 2200 RPM)

MF5710 Deluxe Powershuttle:
100 Max Engine HP, 95 Engine HP, 82 PTO HP

MF5711 Deluxe Powershuttle:
110 Max Engine HP, 105 Engine HP, 92 PTO HP

FRONT AXLE
- 4wd: Dana 720 Center Driveline, Open Differential, Standard Hydraulically Actuated Differential Lock Push Button 4WD Engagement

POWERTRAIN
- Transmission: 25 mph (40 kph) 12 X 12 Synchro Power Shuttle (6 Gears, 2 Ranges with Declutch on Main Gear Lever)
- Rear Axle: Inboard Planetary Final Drives, with Push Button Operated Mechanical Differential Lock, Flanged Rear Axle
- Brakes: Independent Oil Immersed Wet Disc Brakes with Independent Foot Pedal Operation
- Hook and Lever Parking Brake
- PTO: Independent 540/540E/1000 RPM Flanged PTO, Internal Control, 6 and 21 Spline Shafts (1.375 In. Diameter), Independent Wet Disc Clutch, Electro-hydraulic Engagement

HYDRAULIC SYSTEM
- Implement System: Open Center System, Engine Driven Gear Pump, 15.1 GPM (57 LPM), combined to 26 GPM (98 L/min) Flow Optional Cable-controlled Loader Joystick with Mid Valves and 3rd Function Ready Buttons
- 2 Mechanical Controlled Spool Valves (1 x DA KO FL + 1 x DA KO FL)
- Rear Linkage: ASAE Category II with Telescopic Ball Ends Lift Capacity at 24": 7716 lbs (3500 kg) 2 Adjustable Rear Linkage Turnbuckles, Standard Telescopic Stabilizers
- Swing Offset Drawbar with 350/400/500mm Positions, Cat 2 Clevis

ELECTRICAL
- 12 Volt DC, Negative Ground
- Intake Air Pre Heater
- High Capacity Wet Charge, Maintenance Free SAE 720 CCA Battery
- 120 AMP Alternator
- Ignition: Key with Safety Start
- Keyed Engine Shutoff
- Lighting: 4 Headlights, 2 Rear Marker Light Assemblies
- Mid Mounted Work Lights
- Engine RPM Memory Switch
- Rear Brake Lights
- 7 Pin ASAE Outlet Socket
- 30 Amp Auxiliary Electrical Socket

INSTRUMENTS
- Digital & Analog Instrument Panel with Performance Monitor
- Analog Engine Tachometer
- Analog Fuel Gauge
- Analog Engine Temperature
- Digital Transmission Display
- Digital Hour Meter
- Operation and Service Lights

OPERATOR ENVIRONMENT (CAB MODELS)
- Standard Cab Roof, HVAC with Manual Controls, 2 Low Mounted Doors, Aerial and Speakers, 2 Front and 2 Rear Roof Mounted Work Lights
- Electric Controlled 3-Point Linkage with Draft Control
- Rubber Floor Mat
- Telescopic Large Side Mirrors
- Internal Mirror
- Dual Adjustment Steering Column (Tilting and Telescopic)
- Air Suspended Swiveling Seat with Armrests
- Retractable Seat Belt
- Instructor's Seat with Seatbelt
- Cup Holder
- Pendant Style (Suspended) Foot Pedals
- Hand Rails
- Hand and Foot Throttle
- Left Side and Right Side Foot Step Entry
- External 3-Point Lift Control on Left and Right Hand Fenders
- Rear Wiper/Washer

OTHER STANDARD FEATURES
- One-Piece Tilting Hood
- Rear Fender Side Extensions
- Fuel Tank Guard
- Tool Box
- SMV Sign

MASSEY FERGUSON®

MF 5700 CAB

(F.O.B. PORT OF ENTRY)

LOADER FEATURES

MF941X AND MF946X LOADERS
FITS ALL MF5700 / MF6700 GLOBAL SERIES TRACTORS

- One Piece Main Frame with Tapered Arms and Single Cross Member, Powder Painted with Corrosion Protection
- Quick Attach Loader Frame Mount with Pin Lock and Built in Parking Stands
- 5 mm High Tensile, Tapered Box Section Frame
- 70 mm Arm Profile
- 75 mm Double Acting Lift Cylinders **(MF941X)**
- 70 mm Double Acting Lift Cylinders **(MF946X)**
- 75 mm Double Acting Bucket Cylinders **(MF941X)**
- 75 mm Double Acting Bucket Cylinders, Equal Displacement **(MF946X)**
- Hydraulic Lines Routed Inside Main Frame for Protection and Visibility
- Pivots have Recessed Greasable Galvanized Steel Pins with Bushings at Key Points
- 4-Flat Face Hydraulic Tips on Boom and Bucket Circuits
- Protective Hose Cover
- Bucket Level Indicator
- **MF941X:** 2220 lbs (1007 kg) Lift Capacity to Full Height, 31.5 inches, (800 mm) Forward of Pivot Pin per ASABE 301.3 at 2828 PSI
- **MF946X:** 3500 lbs (1588 kg) Lift Capacity to Full Height, 31.5 inches, (800 mm) Forward of Pivot Pin per ASABE 301.3 at 2828 PSI
- Maximum Lift Height: 148 inches at Pivot
- Rated Hydraulic Pressure: 2828 PSI
- Maximum Roll Back Angle: 49 Degrees
- Maximum Dump Angle: 42 Degrees
- Universal Euro Hook Type Implement Attachments
- Grille Guard Standard

MFFL.3723 AND MFFL.3819 LOADERS
FITS ALL MF5700 / MF6700 GLOBAL SERIES TRACTORS

- One Piece 5 mm High Tensile Main Frame with Tapered and Emboss Arms
- Quick Attach Implement Mounting with Euro Style Single Lever Locking System
- 80 mm Arm Profile
- 80 mm Double Acting Lift Cylinders **(FL.3723)**
- 75 mm Double Acting Lift Cylinders **(FL.3819)**
- 80 mm Double Acting Bucket Cylinders **(FL.3723)**
- 80 mm Double Acting, Equal Displacement Bucket Cylinders **(FL.3819)**
- Industrial Grade Hydraulic Fittings and Twin Braided Hoses, Incorporated Internally Inside Loader Boom
- Central Valve, Equalized Oil Distribution Valve with Incorporated Relief Valves
- 4-Flat Face Hydraulic Tips on Boom and Bucket Circuits
- Protective Hose Cover
- Powder Painted with Corrosion Protection
- Bucket Level Indicator
- Lock and Go Loader / Subframe Connection System
- Pivots Are Greasable and Include Industrial Grade Pins and Bushings
- Front Bumper Guard (with Subframe Set)
- Buckets Have Heavy Duty, Welded-On Cutting Edge, Box Beam Section for Stiffness and Torsional Rigidity and Lateral Reinforcing Bars
- 149" (3.79 m) Lift Height to Pivot Pin
- **FL.3723**: 2840 lbs (1288 kg) Lift Capacity to Full Height, 31.5",(800 mm) Forward of Pivot Pin per ASABE 301.3 @ 2828 PSI
- **FL.3819**: 4230 lbs (1919 kg) Lift Capacity to Full Height, 31.5", (800 mm) Forward of Pivot Pin per ASABE 301.3 @ 2828 PSI
- Maximum Roll Back Angle: 58 Degrees
- Maximum Dump Angle: 60 Degrees

MF 5700 CAB

MASSEY FERGUSON®

(F.O.B. PORT OF ENTRY)

Feature Code	Description	Factory Code	Approx. Weight (lb.)	List Price

ONE *FEATURE CODE* FROM EACH GROUP MUST BE SPECIFIED (Unless In Base Option is Desired)

BASE MACHINE

DELUXE CAB MODELS

4WD

MF5710~ES	Massey Ferguson 5710	38C58746		76,294.00
MF5711~ES	Massey Ferguson 5711	16C60913		79,108.00

ALL Tractors will be charged $325 for Assembly

LOADER PROVISION

350-LL000	Without Loader Provision			**In Base**
350-LL001	Front Loader Provision includes Frame Rails, Uprights, Subframe, Hydraulic Kit with Joystick with Valve and 3rd Function Ready Buttons, and Grille Guard	16C3548		4,608.00

LOADER OPTIONS (For Additional Loader Options, Refer to Implements Price List Revision)

Note: MF941X/946X Loaders are not Compatible with 28-inch Front Tires

For Factory Loader Ready Tractors - Requires LL001

Non Self-Leveling

7296140	MF941X Loader - Euro Style	04C4583	794	5,952.00
7296240	MFFL.3723 Loader - Euro Style, Includes Soft Drive with Electric Shutoff	64C5568		7,232.00

Mechanical Self-Leveling

7296144	MF946X Loader - Euro Style	44C5445	926	7,072.00
7296236	MFFL.3819 Loader - Euro Style, Includes Soft Drive with Electric Shutoff	99C7150		9,287.00

BUCKET OPTIONS - Recommended with Loader Packages Only

Euro Style

72537003ML	83-inch Heavy Duty Material Bucket - SM 210 (Recommended for MF941X-946X Loaders)	75C981		1,155.00
72537006ML	83-inch Material Bucket - GM 215 (Recommended for MFFL.3723 or .3819 Loaders)	79C1098		1,427.00

(F.O.B. PORT OF ENTRY)

Feature Code	Description	Factory Code	Approx. Weight (lb.)	List Price
TIRE BRAND SELECTION				
70-Base	Trelleborg Brand			No Charge
FRONT AND REAR TIRES				
	NOTE: Tire Options not In Base are Subject to Extended Factory Lead Time of Approximately 120 Days			
	4WD - Flange Axle - Set of 2			
TIRES FOR 5710 AND 5711				
75-W1880	Rear: 460/85R34 (18.4R34) R1W Front: 380/85R24 (14.9R24) R1W			In Base
75-W1840	Rear: 420/85R34 (16.9R34) R1W Front: 340/85R24 (13.6R24) R1W	(59C667)		(867.00)
75-W1886	Rear: 420/85R38 (16.9R38) R1W Front: 340/85R28 (13.6R28) R1W	(09C090)		(117.00)
	Note: 28-inch Front Tires are not Compatible with MF941X/946X Loaders			
75-W5990	Rear Shipping Wheel Front Shipping Wheel	(48C4638)		(6,024.00)

MF 5700 CAB

MASSEY FERGUSON®

(F.O.B. PORT OF ENTRY)

Feature Code	Description	Factory Code	Approx. Weight (lb.)	List Price
CREEPER GEAR				
35-EN000	Without Creeper Gear			**In Base**
35-EN002	Creeper Gear (13.68:1 Reduction) **(Extended Factory Lead Time Approximately 160 Days)**	93C1161		1,509.00
AUXILIARY VALVES				
50-KX032	2 Mechanically Controlled Spool Valves, (1 x DA KO FL + 1 x DA KO FL)			**In Base**
50-KX044	3 Mechanically Controlled Spool Valves, (1 x DA KO FL + 1 x DA KO FL + 1 x DA FD KO FL) **(Extended Factory Lead Time Approximately 160 Days)**	26C1030		1,338.00
CAB				
140-AI019	Standard Cab			**In Base**
140-E1040	VisioRoof with FOPS **(Extended Factory Lead Time Approximately 160 Days)**	68C449		584.00
SEAT				
125-AE026	Air Suspended Swivel Seat with Armrests			**In Base**
MISCELLANEOUS				
275-TC025	English Language Operator's Manual - 5700 Cab Tractor			**In Base**
ASSEMBLY CENTER MISCELLANEOUS OPTIONS				
ACWTPKG1	100kg Weight Adapter Package	95C257		335.00
ACWTPKG2	100kg Stackable Rear Wheel Weight Package (order quantity 1 or 2) (Requires Adapter Package ACWTPKG1 to Install)	95C257		335.00
FROPML5	French Language Operator Manual - 5700 Cab Tractor			No Charge

FIELD INSTALLED ACCESSORIES

PARTS SUPPLIED

DEALER / FIELD INSTALLED ACCESSORIES

Consult your AGCO parts ordering system using oneAGCO Solutions-Online to determine current availability and pricing.

CATALOG NUMBER	DESCRIPTION	5710	5711	NOTES
HYDRAULICS				
4393120M13	3rd Remote Valve, Double Acting Float with Kickout and Flow Divider	X	X	Requires ACW0327140 (Platform) or ACW1235740 (Cab) Only Available from 2 to 3 Valves. Note: 3rd valve kits can only be used on tractors that were received from the factory with 2 valves installed. This kit will not work if the 2nd valve was field installed.
ACW0327140	3rd Remote Valve Control Lever for Platform	X	X	Note: 3rd valve kits can only be used on tractors that were received from the factory with 2 valves installed. This kit will not work if the 2nd valve was field installed.
ACW1235740	3rd Remote Valve Control Lever for Cab	X	X	Note: 3rd valve kits can only be used on tractors that were received from the factory with 2 valves installed. This kit will not work if the 2nd valve was field installed.
WEIGHTS / BALLAST				
4380458M1	40 KG Front Weight - Single Weight	X	X	Max 14 Weights Requires Hardware Kit ACW002695A
4349427M2	55 KG Front Weight - Single Weight	X	X	Max 14 Weights Requires Hardware Kit ACW002695A
ACW002695A	Front End Weight Hardware 40 and 55 KG	X	X	Works for Stack of 10 or 14 Weights Order Weights Separately
ACW012805A	Single Rear Wheel Weight Adapter Hub (50 KG)	X	X	Requires Hardware Kit ACW0392850 - One Kit per Adapter
ACW0392850	Single Rear Wheel Weight Adapter Hub Hardware Kit	X	X	One Kit Required per Adapter
ACW0128080	Single Rear Wheel Weight (50 KG)	X	X	Requires ACW0392870 Hardware Kit (1 per Weight) and ACW012805A Adapter Weight.Requires adapter to be installed first. Multiple weights can be stacked.
ACX2448030	Single Rear Wheel Weight Hardware Kit (50 KG) Qty 4	X	X	Each weight requires Qty 4 to install

FIELD INSTALLED ACCESSORIES

MASSEY FERGUSON®

PARTS SUPPLIED

DEALER / FIELD INSTALLED ACCESSORIES

Consult your AGCO parts ordering system using oneAGCO Solutions-Online to determine current availability and pricing.

CATALOG NUMBER	DESCRIPTION	5710	5711	NOTES
MISCELLANEOUS				
ACW0026370	Front Tow Hitch with Tow Pin	X	X	Mounts to Front Weight Carrier Frame or Suit Case Weights
ACW1305370	Grille Guard	X	X	Requires Tractor with LL000 Option
ACW0709840	Block Heater (220V)	X	X	
ACW085956A	Fuel Filter Heater	X	X	Also available for MF4700 / 6700 Global Series Requires Qty 1 593386D1 Note: Prevents fuel filter gelling in extreme cold temperatures
4385513M1	Lockable Fuel Cap with Key	X	X	
ACW0141220	Lockable DEF Cap with Key	X	X	
ACW0929370	355mm Plastic Front Fender	X	X	Requires Hardware Kit ACW0929490
ACW0929310	410mm Plastic Front Fender	X	X	Requires Hardware Kit ACW0929490
ACW0927320	470mm Plastic Front Fender	X	X	Requires Hardware Kit ACW0929490
ACW0929490	Pivoting Front Fenders Hardware Kit, <1200mm (47")	X	X	
ACW0929500	Pivoting Front Fenders Hardware Kit, >1200mm (47")	X	X	

MASSEY FERGUSON®

RESERVED

MASSEY FERGUSON®

MF 5700D
GLOBAL SERIES

MASSEY FERGUSON®

MF 5700D CAB

(F.O.B. PORT OF ENTRY)

TRACTOR FEATURES

ENGINE SYSTEM
- 4.4L 4-Cylinder AGCO Power
- EPA Tier 4 Final and CARB Certified
- Air Cleaner: Dual Element Dry Type
- Air Cleaner Intake, Under Hood
- A-Pillar Exhaust with Heat Shield
- Cooling System: Antifreeze 50/50 Mix
- Cold Starting Aid: Intake Heater

HORSEPOWER
(Max Engine @ 2000 RPM; Rated Engine & PTO @ 2200 RPM)

MF5710D Deluxe Powershuttle:
100 Max Engine HP, 95 Engine HP, 76 PTO HP

MF5711D Deluxe Powershuttle:
110 Max Engine HP, 105 Engine HP, 86 PTO HP

FRONT AXLE
- 4wd: Dana 720 Center Driveline, Open Differential, Standard Hydraulically Actuated Differential Lock Push Button 4WD Engagement

POWERTRAIN
- Transmission: 25 mph (40 kph) Dyna-4 Power Control Shuttle and Brake to Neutal with Speedmatching and Autodrive
- Rear Axle: Inboard Planetary Final Drives, with Push Button Operated Mechanical Differential Lock, Flanged Rear Axle
- Brakes: Independent Oil Immersed Wet Disc Brakes with Independent Foot Pedal Operation
- Hook and Lever Parking Brake
- PTO: Independent 540/540E/1000 RPM Flanged PTO, Internal Control, 6 and 21 Spline Shafts (1.375 In. Diameter), Independent Wet Disc Clutch, Electro-hydraulic Engagement

HYDRAULIC SYSTEM
- Implement System: Open Center System, Engine Driven Gear Pump, 15.1 GPM (57 LPM), combined to 26 GPM (98 L/min) Flow Optional Cable-controlled Loader Joystick with Mid Valves and 3rd Function Ready Buttons
- 3 Mechanical Controlled Spool Valves (1 x DA KO FL + 1 x DA KO FL + 1 x DA FD KO FL)
- Rear Linkage: ASAE Category II with Telescopic Ball Ends Lift Capacity at 24": 7716 lbs (3500 kg) 2 Adjustable Rear Linkage Turnbuckles, Standard Telescopic Stabilizers
- Swing Offset Drawbar with 350/400/500mm Positions, Cat 2 Clevis

ELECTRICAL
- 12 Volt DC, Negative Ground
- Intake Air Pre Heater
- High Capacity Wet Charge, Maintenance Free SAE 720 CCA Battery
- 120 AMP Alternator
- Ignition: Key with Safety Start
- Keyed Engine Shutoff
- Lighting: 4 Headlights, 2 Rear Marker Light Assemblies
- Mid Mounted Work Lights
- Engine RPM Memory Switch
- Rear Brake Lights
- 7 Pin ASAE Outlet Socket
- 30 Amp Auxiliary Electrical Socket

INSTRUMENTS
- Digital & Analog Instrument Panel with Performance Monitor
- Analog Engine Tachometer
- Analog Fuel Gauge
- Analog Engine Temperature
- Digital Transmission Display
- Digital Hour Meter
- Operation and Service Lights

OPERATOR ENVIRONMENT (CAB MODELS)
- Mechanical Cab Suspension
- Standard Cab Roof, HVAC with Manual Controls, 2 Low Mounted Doors, Aerial and Speakers, 2 Front and 2 Rear Roof Mounted Work Lights
- Electric Controlled 3-Point Linkage with Draft Control
- Rubber Floor Mat
- Telescopic Large Side Mirrors
- Internal Mirror
- Dual Adjustment Steering Column (Tilting and Telescopic)
- Air Suspended Swiveling Seat with Armrests
- Retractable Seat Belt
- Instructor's Seat with Seatbelt
- Cup Holder
- Pendant Style (Suspended) Foot Pedals
- Hand Rails
- Hand and Foot Throttle
- Left Side and Right Side Foot Step Entry
- External 3-Point Lift Control on Left and Right Hand Fenders
- Rear Wiper/Washer

OTHER STANDARD FEATURES
- One-Piece Tilting Hood
- Rear Fender Side Extensions
- Fuel Tank Guard
- Tool Box
- SMV Sign

MF 5700D CAB

MASSEY FERGUSON®

(F.O.B. PORT OF ENTRY)

LOADER FEATURES

MF941X AND MF946X LOADERS
FITS ALL MF5700 / MF6700 GLOBAL SERIES TRACTORS

- One Piece Main Frame with Tapered Arms and Single Cross Member, Powder Painted with Corrosion Protection
- Quick Attach Loader Frame Mount with Pin Lock and Built in Parking Stands
- 5 mm High Tensile, Tapered Box Section Frame
- 70 mm Arm Profile
- 75 mm Double Acting Lift Cylinders **(MF941X)**
- 70 mm Double Acting Lift Cylinders **(MF946X)**
- 75 mm Double Acting Bucket Cylinders **(MF941X)**
- 75 mm Double Acting Bucket Cylinders, Equal Displacement **(MF946X)**
- Hydraulic Lines Routed Inside Main Frame for Protection and Visibility
- Pivots have Recessed Greasable Galvanized Steel Pins with Bushings at Key Points
- 4-Flat Face Hydraulic Tips on Boom and Bucket Circuits
- Protective Hose Cover
- Bucket Level Indicator
- **MF941X:** 2220 lbs (1007 kg) Lift Capacity to Full Height, 31.5 inches, (800 mm) Forward of Pivot Pin per ASABE 301.3 at 2828 PSI
- **MF946X:** 3500 lbs (1588 kg) Lift Capacity to Full Height, 31.5 inches, (800 mm) Forward of Pivot Pin per ASABE 301.3 at 2828 PSI
- Maximum Lift Height: 148 inches at Pivot
- Rated Hydraulic Pressure: 2828 PSI
- Maximum Roll Back Angle: 49 Degrees
- Maximum Dump Angle: 42 Degrees
- Universal Euro Hook Type Implement Attachments
- Grille Guard Standard

MFFL.3723 AND MFFL.3819 LOADERS
FITS ALL MF5700 / MF6700 GLOBAL SERIES TRACTORS

- One Piece 5 mm High Tensile Main Frame with Tapered and Emboss Arms
- Quick Attach Implement Mounting with Euro Style Single Lever Locking System
- 80 mm Arm Profile
- 80 mm Double Acting Lift Cylinders **(FL.3723)**
- 75 mm Double Acting Lift Cylinders **(FL.3819)**
- 80 mm Double Acting Bucket Cylinders **(FL.3723)**
- 80 mm Double Acting, Equal Displacement Bucket Cylinders **(FL.3819)**
- Industrial Grade Hydraulic Fittings and Twin Braided Hoses, Incorporated Internally Inside Loader Boom
- Central Valve, Equalized Oil Distribution Valve with Incorporated Relief Valves
- 4-Flat Face Hydraulic Tips on Boom and Bucket Circuits
- Protective Hose Cover
- Powder Painted with Corrosion Protection
- Bucket Level Indicator
- Lock and Go Loader / Subframe Connection System
- Pivots Are Greasable and Include Industrial Grade Pins and Bushings
- Front Bumper Guard (with Subframe Set)
- Buckets Have Heavy Duty, Welded-On Cutting Edge, Box Beam Section for Stiffness and Torsional Rigidity and Lateral Reinforcing Bars
- 149" (3.79 m) Lift Height to Pivot Pin
- **FL.3723**: 2840 lbs (1288 kg) Lift Capacity to Full Height, 31.5",(800 mm) Forward of Pivot Pin per ASABE 301.3 @ 2828 PSI
- **FL.3819**: 4230 lbs (1919 kg) Lift Capacity to Full Height, 31.5", (800 mm) Forward of Pivot Pin per ASABE 301.3 @ 2828 PSI
- Maximum Roll Back Angle: 58 Degrees
- Maximum Dump Angle: 60 Degrees

MASSEY FERGUSON®

MF 5700D CAB

(F.O.B. PORT OF ENTRY)

Feature Code	Description	Factory Code	Approx. Weight (lb.)	List Price

ONE *FEATURE CODE* FROM EACH GROUP MUST BE SPECIFIED (Unless In Base Option is Desired)

BASE MACHINE

4WD

MF5710C~4D4F	Massey Ferguson 5710 with Dyna-4	07C66675	TBD	86,591.00
MF5711C~4D4F	Massey Ferguson 5711 with Dyna-4	23C69530	TBD	90,299.00

ALL Tractors will be charged $325 for Assembly

LOADER PROVISION

350-LL000	Without Loader Provision			**In Base**
350-LL001	Front Loader Provision includes Frame Rails, Uprights, Subframe, Hydraulic Kit with Joystick with Valve and 3rd Function Ready Buttons, and Grille Guard	16C3548		4,608.00

LOADER OPTIONS (For Additional Loader Options, Refer to Implements Price List Revision)

For Factory Loader Ready Tractors - Requires LL001

Non Self-Leveling

7296140D	MF941X Loader - Euro Style	04C4583	794	5,952.00
7296240D	MFFL.3723 Loader - Euro Style, Includes Soft Drive with Electric Shutoff	64C5568		7,232.00

Mechanical Self-Leveling

7296144D	MF946X Loader - Euro Style	44C5445	926	7,072.00
7296236D	MFFL.3819 Loader - Euro Style, Includes Soft Drive with Electric Shutoff	99C7150		9,287.00

BUCKET OPTIONS - Recommended with Loader Packages Only

Euro Style

72537003MD	83-inch Heavy Duty Material Bucket - SM210) (Recommended for MF941X-946X Loaders)	75C981		1,155.00
72537006MD	83-inch Material Bucket - GM215 (Recommended for MFFL.3723 or .3819 Loaders)	79C1098		1,427.00

(F.O.B. PORT OF ENTRY)

Feature Code	Description	Factory Code	Approx. Weight (lb.)	List Price
TIRE BRAND SELECTION				
70-Base	Factory Choice Radial Tire			No Charge
FRONT AND REAR TIRES				
	NOTE: Tire Options not In Base are Subject to Extended Factory Lead Time of Approximately 120 Days			
TIRES FOR 5710D and 5711D				
	4WD - Flange Axle - Set of 2			
75-W1880	Rear: 460/85R34 (18.4R34) R1W Front: 380/85R24 (14.9R24) R1W			**In Base**
75-W1840	Rear: 420/85R34 (16.9R34) R1W Front: 340/85R24 (13.6R24) R1W	(59C667)		(867.00)
75-W1886	Rear: 420/85R38 (16.9R38) R1W Front: 340/85R28 (13.6R28) R1W	(09C090)		(117.00)

MASSEY FERGUSON®

MF 5700D CAB

(F.O.B. PORT OF ENTRY)

Feature Code	Catalog Number	Description	Factory Code	Approx. Weight (lb.)	List Price
CREEPER GEAR					
35-EN000	Base	Without Creeper Gear			**In Base**
35-EN002	7296147	Creeper Gear (13.68:1 Reduction)	93C1161		1,509.00
		(Extended Factory Lead Time Approximately 160 Days)			
CAB					
140-AI019	Base	Standard Cab			**In Base**
140-E1040	7296150	VisioRoof with FOPS	68C449		584.00
MISCELLANEOUS					
275-TC025	Base	English Language Operator's Manual			**In Base**
275-TC005	7296086	French Language Operator's Manual			No Charge
ASSEMBLY CENTER MISCELLANEOUS OPTIONS					
ACWTPKG1		100kg Weight Adapter Package	95C257		335.00
ACWTPKG2		100kg Stackable Rear Wheel Weight Package (order quantity 1 or 2) (Requires Adapter Package ACWTPKG1)	95C257		335.00

FIELD INSTALLED ACCESSORIES

MASSEY FERGUSON®

PARTS SUPPLIED

DEALER / FIELD INSTALLED ACCESSORIES

Consult your AGCO parts ordering system using oneAGCO Solutions-Online to determine current availability and pricing.

CATALOG NUMBER	DESCRIPTION	5710D	5711D	NOTES
WEIGHTS / BALLAST				
4380458M1	40 KG Front Weight - Single Weight	X	X	Max 14 Weights Requires Hardware Kit ACW002695A
4349427M2	55 KG Front Weight - Single Weight	X	X	Max 14 Weights Requires Hardware Kit ACW002695A
ACW002695A	Front End Weight Hardware 40 and 55 KG	X	X	Works for Stack of 10 or 14 Weights Order Weights Separately
ACW012805A	Single Rear Wheel Weight Adapter Hub (50 KG)	X	X	Requires Hardware Kit ACW0392850 - One Kit per Adapter
ACW0392850	Single Rear Wheel Weight Adapter Hub Hardware Kit	X	X	One Kit Required per Adapter
ACW0128080	Single Rear Wheel Weight (50 KG)	X	X	Requires ACW0392870 Hardware Kit (1 per Weight) and ACW012805A Adapter Weight.Requires adapter to be installed first. Multiple weights can be stacked.
ACX2448030	Single Rear Wheel Weight Hardware Kit (50 KG) Qty 4	X	X	Each weight requires Qty 4 to install
MISCELLANEOUS				
ACW0026370	Front Tow Hitch with Tow Pin	X	X	Mounts to Front Weight Carrier Frame or Suit Case Weights
ACW1305370	Grille Guard	X	X	Requires Tractor with LL000 Option
ACW0709840	Block Heater (220V)	X	X	
ACW085956A	Fuel Filter Heater	X	X	Also available for MF4700 / 5700 / 6700 Global Series Requires Qty 1 593386D1 Note: Prevents fuel filter gelling in extreme cold temperatures
4385513M1	Lockable Fuel Cap with Key	X	X	
ACW0141220	Lockable DEF Cap with Key	X	X	
ACW0929370	355mm Plastic Front Fender	X	X	Requires Hardware Kit ACW0929490
ACW0929310	410mm Plastic Front Fender	X	X	Requires Hardware Kit ACW0929490
ACW0927320	470mm Plastic Front Fender	X	X	Requires Hardware Kit ACW0929490
ACW0929490	Pivoting Front Fenders Hardware Kit, <1200mm (47")	X	X	
ACW0929500	Pivoting Front Fenders Hardware Kit, >1200mm (47")	X	X	

MASSEY FERGUSON®

RESERVED

MASSEY FERGUSON®

MF5700S SERIES

MASSEY FERGUSON®

5700S Classic

(F.O.B. PORT OF ENTRY)

CLASSIC EDITION FEATURES

ENGINE
MF5711S: 105 Rated Engine HP, 85 PTO HP, 110 Max Engine HP
MF5712S: 115 Rated Engine HP, 95 PTO HP, 120 Max Engine HP
MF5713S: 125 Rated Engine HP,105 PTO HP,130 Max Engine HP

AGCO POWER™ 4.4L (268 cu. in.) 4 Cylinder
- Air-to-Air Aftercooled, Common Rail Injection, Turbocharged
- Selective Catalytic Reduction (SCR) Technology
- Tier 4 Final EPA and CARB Certified

Electronic Engine Management (EEM) with Dual ERPM Settings
Electronic Controlled Viscous Fan Drive
Dual Element Dry Type Air Cleaner
Vertical Exhaust at Right Front Cab Post
Cooling System: Antifreeze to Minus 40C
Fuel Tank Capacity: 47.5 Gal (180 L)
DEF Tank Capacity: 6.6 Gal (25 L)

POWERTRAIN
Dyna-4 Transmission 25 MPH (40 KPH)
- 16F/16R Semi-Powershift, 4 Ranges with 4 Powershifts Per Range
- Transmission Control T-Handle on Right Hand Console

Multi-Disc Wet Brakes
Power Differential Lock
Independent PTO:
- 540/1000 with 6/21 Spline Shaft

Rear Fender Mounted PTO Shut-Off
Flange Axles

FRONT WHEEL ASSIST AXLE
4 WD Power Front Axle (PFA)
- 8 Bolt Pattern

Shielded Center Drive Line with Electro-Hydraulic Control and Front Wheel Drive Differential Lock

HYDRAULICS
Closed Center Load Sensing 29 GPM (110 L/min) Pump
2900 PSI (200 Bar) Maximum Pressure
Two Mechanical Valves – Lever Controlled on Right Hand Console
Hydrostatic Power Steering

HITCH
3-Point Hitch: Category 2/3 Telescopic Ball End Links
- Active Transport Control
- Lower Link Sensing
- Electronic Draft Control, Electronic Height Control, and Rate of Drop
- Variable Float Telescopic Stabilizers
- Left and Right Side External 3-Point Control

Drawbar: Category 2, Clevis and Drop Pin

ELECTRICAL SYSTEM
175 Amp Alternator
12 V Battery, 775 CCA (SAE)
7 Pin ASAE Rear Trailer Electrical Outlet
Electrical Isolator Switch and Jumpstart Point
110 V Engine Block Heater
Ignition with Neutral Start and Key Shutoff

LIGHTING
Four Front Hood Mounted Lights
Four Front Single Bulb Worklights
Two Rear Double Bulb Worklights
Worklights on Handrails and Rear Fenders
Taillights, Flashing Warning Lights and Turn Signals

INSTRUMENTS
Setup and Information Screen (SIS)
FieldStar 5 (Isobus and Guidance)
Tachometer: Digital and Analog
PTO Speed: Digital
Ground Speed Display: Digital
Fuel Level and Coolant Temp Gauges
Warning/Information Lights

OPERATOR AREA
6 Post Cab
Adjustable Steering Column with SpeedSteer
Front Sun Visor
Air Conditioning and Heater
Air Suspended Swivel Seat with Armrest
Instructor Seat
Front and Rear Windshield Wiper/Washer
External Side Mirrors (Telescopic)
Two Audio Speakers and Antenna
One Electrical Socket in Cab
Speed Chart

WHEELS AND TIRES
Rear: 460/85R34 R1W 8 Lug Pressed Wheels
Front: 380/85R24 R1W Waffle Wheel

OTHER STANDARD FEATURES
Massey Ferguson Guide Ready (Verizon)
Massey Ferguson Connect Ready
TaskDoc
Hi VIS Front Hood, Single Piece Raising with Lockable Front Latch
Lockable Tool Box
SMV Sign
Molded Rear Fenders
English Op Manual

MF5713S - NOT FOR SALE IN STATE OF NEBRASKA

(F.O.B. PORT OF ENTRY)

LOADER FEATURES

FL.3723 FITS 5700, 6700 AND 5700SL SERIES TRACTORS

One Piece Main Frame Arms and Compression Molded Curved Cross Member
Quick Attach Implement Mounting with Euro Style Single Lever Locking System
5 mm High Tensile, Tapered Box Section Frame
70 mm Arm Profile
80 mm Double Acting Lift Cylinders **(FL.3723)**
80 mm Double Acting Bucket Cylinders **(FL.3723)**
Industrial Grade Hydraulic Fittings and Hoses, Incorporated Internally Inside Loader Boom
Central Valve, Equalized Oil Distribution Valve with Incorporated Relief Valves
4-Flat Face Hydraulic Tips on Boom and Bucket Circuits
Protective Hose Cover
Lock and Go Loader / Subframe Connection System
Pivots Are Greasable and Include Industrial Grade Pins and Bushings
Powder Painted with Corrosion Protection
Bucket Level Indicator
Front Bumper Guard (With Subframe Set)
Buckets Have Heavy Duty, Welded-On Cutting Edge, Box Beam Section for Stiffness and Torsional Rigidity and Lateral Reinforcing Bars
149" (3.79 m) Lift Height to Pivot Pin
FL.3723 : 5093 lb. (2310 kg) Lift Capacity to Full Height, 31.5",(800 mm) Forward of Pivot Pin per ASABE
301.3 @ 2828 PSI
Maximum Roll Back Angle: 58 Degrees
Maximum Dump Angle: 60 Degrees

FL.3819 FITS 5700, 6700 AND 5700SL SERIES TRACTORS

One Piece Main Frame Arms and Compression Molded Curved Cross Member
Quick Attach Implement Mounting with Euro Style Single Lever Locking System
5 mm High Tensile, Tapered Box Section Frame
70 mm Arm Profile
75 mm Double Acting Lift Cylinders **(FL.3819)**
80 mm Double Acting, Equal Displacement Bucket Cylinders **(FL.3819)**
Industrial Grade Hydraulic Fittings and Hoses, Incorporated Internally Inside Loader Boom
Central Valve, Equalized Oil Distribution Valve with Incorporated Relief Valves
4-Flat Face Hydraulic Tips on Boom and Bucket Circuits
Protective Hose Cover
Lock and Go Loader / Subframe Connection System
Pivots Are Greasable and Include Industrial Grade Pins and Bushings
Powder Painted with Corrosion Protection
Bucket Level Indicator
Front Bumper Guard (With Subframe Set)
Buckets Have Heavy Duty, Welded-On Cutting Edge, Box Beam Section for Stiffness and Torsional Rigidity and Lateral Reinforcing Bars
149" (3.79 m) Lift Height to Pivot Pin
FL.3819 : 4255 lb. (1930 kg) Lift Capacity to Full Height, 31.5", (800 mm) Forward of Pivot Pin per ASABE
301.3 @ 2828 PSI
Maximum Roll Back Angle: 58 Degrees
Maximum Dump Angle: 60 Degrees

MF5713S - NOT FOR SALE IN STATE OF NEBRASKA

(F.O.B. PORT OF ENTRY)

Order Code	Catalog Number	Description	Factory Code	Approx. Weight (lb.)	List Price

ONE ORDER CODE FROM EACH GROUP MUST BE SPECIFIED. (Unless n Base Option is desired)

BASE MACHINE

MF5711S~ES~07	7292304	Massey 5711S Classic Tractor 85 PTO HP	M9386531		121,903.00
MF5712S~ES~07	7292305	Massey 5712S Classic Tractor 95 PTO HP	M9750587		126,631.00
MF5713S~ES~07	7292306	Massey 5713S Classic Tractor 105 PTO HP	M10114797		131,361.00

TRANSMISSION OPTIONS

25-EA635	Base	Dyna-4 Transmission with 16F/16R gears 25 MPH . . . (40 KPH) with Speed Matching			**In Base**
25-EA637	7292175	Dyna-4 Transmission with 16F/16R gears 25 MPH . . . (40 KPH) with AUTO-DRIVE	M23485		305.00
35-EN002	7292064	Creeper Gear (14:1 Reduction)	M209209		2,717.00

INSTRUMENT PANEL

175-BA051	7295648	FieldStar 5 (Isobus and Massey Ferguson Guide) . . . All XR options available			**In Base**
175-BA005	7295647	System Information Screen	(M628628)		(8,164.00)
175-BA003	7295658	System Information Screen with Radar . . . . . (For Actual Ground Speed and Slip Control)	(M563948)		(7,324.00)

FOR COMPLETE GUIDANCE PLEASE ORDER FIELDSTAR 5 FROM PARTS

MASSEY FERGUSON GUIDE

300-XR341*	7295653**	Massey Ferguson Guide Ready Package (Verizon) . . Verizon Cellular Network when using NTRIP and Task Doc Pro			**In Base**
300-XR000	7295649	Less Massey Ferguson Guide . . . . . (Requires Less SpeedSteer)	(M346500)		(4,500.00)
300-XR342*	7295654	Massey Ferguson Guide Standard (Verizon) . . . . . with Novatel Smart7 Receiver Pass-to-Pass Accuracy of +/- 20 cm (+/- 8 inch) For correction signal WAAS (no subscription needed)	M211750		2,750.00
300-XR346*	7295655	Massey Ferguson Guide Standard (Verizon) . . . . . Trimble® AG-382 Receiver Pass-to-Pass Accuracy of +/- 20 cm (+/- 8 inch) For correction signal WAAS (no subscription needed)	M273350		3,550.00
300-XR301*	7295650**	Massey Ferguson Guide Ready Package (GSM) . . . . Suggested for Canada and US where Verizon is not preferred when using NTRIP and Task Doc Pro			No Charge
300-XR302*	7295651	Massey Ferguson Guide Standard (GSM) . . . . . with Novatel Smart7 Receiver Pass-to-Pass Accuracy of +/- 20 cm (+/- 8 inch) For correction signal WAAS (no subscription needed)	M211750		2,750.00
300-XR306*	7295652	Massey Ferguson Guide Standard (GSM) . . . . . Trimble® AG-382 Receiver Pass-to-Pass Accuracy of +/- 20 cm (+/- 8 inch) For correction signal WAAS (no subscription needed)	M273350		3,550.00

***REQUIRES SPEEDSTEER AD004**

****TO COMPLETE MF GUIDE, ORDER FIELDSTAR 5 AND MF GUIDE RECEIVER FROM PARTS**

Order Code	Catalog Number	Description	Factory Code	Approx. Weight (lb.)	List Price
SPEEDSTEER					
185-AD004	Base	SpeedSteer Option Mandatory with Massey Ferguson Guide Ready Not Compatible with Less Massey Ferguson Guide- XR000			**In Base**
185-AD002	7293558	Less SpeedSteer	(M202510)		(2,630.00)
TELEMETRY					
160-BS002	Base	Massey Ferguson Connect Ready			**In Base**
160-BS119*	7295662	Massey Ferguson Connect Basic Package (Verizon) Verizon Cellular Network when using Massey Ferguson Connect	M136367		1,771.00
160-BS019*	7295660	Massey Ferguson Connect Basic Package (GSM) Suggested for Canada and US where Verizon is not preferred when using Massey Ferguson Connect	M136367		1,771.00
PTO					
100-LA032	Base	540/1000RPM flanged PTO, In Cab Control - 6/21 Spline Studs			**In Base**
100-LA066	7292251	540/540E/1000 RPM PTO with Economy PTO 540 RPM 6 Spline and 1000 RPM 21 Spline	M41272		536.00
FRONT HITCH					
	Base	Less Front Hitch			**In Base**
230-F1119	7292199	3,968 lbs (1800 kg) Front Hitch with Couplers Requires 3 or more Auxiliary Valves Not Compatible with 2 wd Front Axle	M447678		5,814.00
230-F1149	7292234	3,968 lbs (1800 kg) Front Hitch with Couplers and Front PTO (21 Spline) Requires 3 or more Auxiliary Valves Not Compatible with 2 wd Front Axle	M1103795		14,335.00
REAR 3-POINT HITCH					
	Base	Category 2/3 Hitch with Telescopic Ball End Links			**In Base**
95-GC022	7293572	Category 3 Hitch with Hook End Links and Cat 2/3 Balls and Cones			No Charge

*** 5 YEAR SUBSCRIPTION, MUST BE ACTIVATED WITHIN 12 MONTHS OF WARRANTY REGISTRATION**

(F.O.B. PORT OF ENTRY)

Order Code	Catalog Number	Description	Factory Code	Approx. Weight (lb.)	List Price
LOADER PROVISION					
	Base	Less Loader Provisions			**In Base**
350-LL001	7293445	Front Loader Provision - Mech Joystick Loader Control, Including Hydraulics and Subframe Requires - 1st/2nd Mechanical Control Valves 26 GPM (98 L/min) Twin Flow Open Center System (DP100) or 29 GPM (110 L/min) Closed Center Load Sensing(DP110)	M517902		6,726.00
350-S3002	7292310	Front Loader Provisions including . . . . . Hydraulic and Subframe also includes: 26 GPM (98 L/min) Twin Flow Open Center System Valves 1 and 2 Electric, with Multi-Function Joystick on the Armrest 3rd and 4th Mechanical Valve Located on right hand console	M860013		11,169.00
LOADER OPTIONS - (For Additional Loader Options, Refer to Implements Price List Revision)					
For Factory Loader Ready Tractors - Requires LL001 (which is included in S3002)					
	Non Self-Leveling				
	7296240	MFFL.3723 Loader - Euro Style, Includes Soft Drive . . with Electric Shutoff	M556864		7,232.00
	Mechanical Self-Leveling				
	7296236	MFFL.3819 Loader - Euro Style, Includes Soft Drive . . with Electric Shutoff	M715099		9,287.00
BUCKET OPTIONS - Recommended with Loader Packages Only					
	Euro Style				
	72556223ML	83-inch Material Bucket 210S, 19 cu ft (0.70 cu yds) . .	M98175	496	1,155.00
	72556038ML	83-inch Material Bucket 210H, 24 cu ft (0.89 cu yds) . . Requires MFFL.3723 or MFFL.3819 Loader	M109879	556	1,427.00

(F.O.B. PORT OF ENTRY)

Order Code	Catalog Number	Description	Factory Code	Approx. Weight (lb.)	List Price
❖ **AUXILIARY HYDRAULIC FLOW**					
370-DP110	Base	29 GPM (110 L/min) Closed Center Load Sensing . . .			**In Base**
370-DP057	7292298	15 GPM (57 L/min) Open Center System	(M371371)		(4,823.00)
370-DP100	7292299	26 GPM (98 L/min) Twin Flow Open Center System . .	(M284823)		(3,699.00)

VALID COMBINATIONS		
DP057	**DP100**	**DP110**
KX004 + MU000	KX004 + MU000	KX010 + MU000 (In Base)
KX006 + MU002	KX005 + MU000	KX010 + MU012
	KX006 + MU002	

❖ **AUXILIARY VALVE 1 & 2**					
50-KX010	Base	2 Mechanical Controlled Valves, ... Located on right hand console. (1st and 2nd - Flow Dividing, Kickout, Zero Leak, Float)			**In Base**
50-KX004	7292330	2 Mechanical Controlled Valves, ... Located on right hand console (1st - Single Acting/Double Acting, Flow Dividing and 2nd- Single Acting/Double Acting, Zero Leak, Notch Float)			No Charge
50-KX005	7292331	2 Mechanical Controlled Valves, ... Located on right hand console (1st - Single Acting/Double Acting, Flow Dividing, Kickout and 2nd - Double Acting, Kickout, Float)			No Charge
50-KX006	7292332	2 Mechanical Controlled Valves, ... Located on right hand console (1st - Double Acting, Flow Dividing, Kickout, Zero Leak and 2nd - Single Acting/Double Acting, Zero Leak, Notch Float)			No Charge
❖ **AUXILIARY VALVE 3 & 4**					
55-MU000	Base	Less Additional Valve			**In Base**
55-MU002	7292194	3rd Mechanical Valve Only, ... Located on right hand console (Single Acting/Double Acting)	M85162		1,106.00
55-MU012	7292231	3rd and 4th Mechanical Valve Only,. . . . . Located on right hand console (1st and 2nd - Flow Dividing, Kickout, Zero Leak, Float)	M194194		2,522.00

❖ Please note that Loader Provisions S3002 includes key hydraulic components and may require this option group to be left blank

(F.O.B. PORT OF ENTRY)

Order Code	Catalog Number	Description	Factory Code	Approx. Weight (lb.)	List Price
SEAT OPTIONS					
	Base	Air Suspended Swivel Seat with Armrest			**In Base**
125-AE027	7293920	Air Suspended Seat - Automatic Adjustment	M92631		1,203.00
CAB OPTIONS					
140	Base	Standard Cab Roof			**In Base**
140-AI020	7293077	Standard Cab Roof with Roof Hatch	M21868		284.00
140-E1022	7293078	Visio Roof, Includes 2 Front Double Bulb and 2 Rear Double Bulb Worklights Not Compatible with: A0150 Worklamp Options Massey Ferguson Guide - XR301/XR341	M127050		1,650.00
140-A0142	7292261	Visio Roof, Includes 2 Front LED Double Bulbs and 2 Rear LED Double Bulb Worklights Not Compatible with: A0150 Worklamp Options Massey Ferguson Guide - XR301/XR341	M190960		2,480.00
115-AM084	7293559	OptiRide Passive Mechanical Cab Suspension	M141988		1,844.00
150-AN001	7292237	Internal Mirror	M03465		45.00
145-AL032	7295330	Telescopic Wide Angle Mirrors	M28413		369.00
RADIO					
365-AF011	7294227	Radio (CD Player, MP3 Compatible)	M42350		550.00
ELECTRICAL					
220-CE020	Base	175 Amp Alternator			**In Base**
220-CE015	7292191	120 AMP Alternators	(M17633)		(229.00)
215-CB000	7293593	Less Engine Block Heater	(M17094)		(222.00)
LIGHTING					
205-VF013	7293103	Dual Roof-Mounted Rotating Beacons, Left and Right Includes SAE SMV sign	M41811		543.00
195	Base	4 Single Bulb Front Worklights, 2 Double Bulb Rear Worklights, Less Mid Mounted Front Worklights			**In Base**
195-A0150	7292262	4 LED Front Worklights, 2 LED Rear Worklights LED Worklights on Front Hood, Handrails and Rear Fenders	M215138		2,794.00
BRAKES					
250-GS001	7293100	Hydraulic Trailer Brakes	M67452		876.00
250-GS062	7293551	Pneumatic Trailer Brakes Not Compatible with 2wd Front Axle (NA004)	M536767		6,971.00
MISCELLANEOUS					
225-LQ001	7293553	Ecology Drain and Engine Water Separator.	M37345		485.00
275-TC005	7294210	French Language OIB.			No Charge
275-TC011	7294211	Spanish Language OIB			No Charge

MASSEY FERGUSON®

(F.O.B. PORT OF ENTRY)

Order Code	Catalog Number	Description	Factory Code	Approx. Weight (lb.)	List Price
REAR WHEEL WEIGHTS					
325-RD002	7293328	2 Sets of 110 LBS (50 KG) weights (4 weights total) . . Mounts Externally to Wheel Only Available on Welded Rims (Non Adjustable)	M47586	1102	618.00
DEALER INSTALLED FRONT WEIGHTS					
	5020186M	8 x 55 KG (121 lbs.) Front Weights	M123739	968	1,607.00
	5020187M	10 x 55 KG (121 lbs.) Front Weights	M153230	1210	1,990.00
PIVOTING FRONT FENDERS					
	Base	Less Pivoting Front Fenders			**In Base**
155-WE110	7294204	Pivoting Front Fenders - Standard Width . . . . . Width depends on tire selection; see Chart Below Requires 4WD Front Axle	M134750		1,750.00
155-WE111	7294205	Pivoting Front Fenders - Wide Width . . . . . Width depends on tire selection; see Chart Below Requires 4WD Front Axle	M158928		2,064.00

Pivoting Front Fender Size		
Standard	**Wide**	**Tire Sizes**
320 mm	355 mm	320/70R24 320/85R24 (12.4R24)
355 mm	380 mm	340/85R24 (13.6R24) 340/85R28 (13.6R28)
380 mm	410 mm	380/70R24 380/70R28 380/85R24 (14.9R24) 380/85R28 (14.9R28) 400/80R24 400/80R28
410 mm	470 mm	420/70R24 420/70R28 440/65R24 440/65R28
470 mm	520 mm	480/65R24 480/65R28
520 mm	620 mm	VF480/60R28 VF520/60R28

REAR FENDERS					
	Base	Standard Width Fenders (78 inch) LESS Rear Extensions			**In Base**
255-WD013	7293450	Standard Width Fenders (78 inch) w/ Rear Extensions.	M104874		1,362.00
255-WD017	7293107	Wide Fender (90.5 inches) with Rear Extensions	M106029		1,377.00

(F.O.B. PORT OF ENTRY)

Order Code	Catalog Number	Description	Factory Code	Approx. Weight (lb.)	List Price
FRONT AXLE					
	Base	4 wd Power Front Axle			**In Base**
65-NA032	7293408	Suspended Front Axle	M569261		7,393.00
TIRE BRAND SELECTION					
70-Blank	7294212	Factory Brand Choice			No Charge
70-T0001	7294195	Michelin (MI) Brand Required	M150150		1,950.00
70-T0007	7294197	Firestone (FI) Brand Required	M94633		1,229.00
70-T0010	7294198	Trelleborg (TR) Brand Required	M94633		1,229.00
FRONT AND REAR TIRES					
		4WD - 8 Lug Steel - Set of 2			
75-Base	7292862B2 7293774B2	Rear: 18.4R34 R1W (MI, FI, TR) Front: 14.9R24 R1W (MI, FI, TR)			**In Base**
75-W1662	7292861B2 7293760B2	Rear: 18.4R30 R1W (MI) Front: 13.6R24 R1W (MI, FI, TR)	(M39347)		(511.00)
75-W1694	7292877B2 7293760B2	Rear: 16.9R34 R1W (MI, FI, TR) Front: 13.6R24 R1W (MI, FI)	(M66220)		(860.00)
75-W1695	7292878B2 7293773B2	Rear: 480/70R34 R1W (MI, TR) Front: 380/70R24 R1W (MI, FI)	M31955		415.00
75-W1664	7292863B2 7293761B2	Rear: 16.9R38 R1W (MI, FI, TR) Front: 13.6R28 R1W (MI, FI, TR)	(M09240)		(120.00)
75-W1700	7292881B2 7293780B2	Rear: 480/70R38 R1W (MI, FI, TR) Front: 380/70R28 R1W (MI, FI, TR)	M102179		1,327.00
75-W1297	7292864B2 7294786B2	Rear: 460/85R38 R1W (MI, FI, TR) Front: 380/85R28 R1W (MI, FI, TR)	M124355		1,615.00

(F.O.B. PORT OF ENTRY)

Order Code	Catalog Number	Description	Factory Code	Approx. Weight (lb.)	List Price
FRONT AND REAR TIRES - Continued					
		Welded Steel Standard Offset with Spacers - Set of 2			
75-W1286	7292858B2 7293757B2	Rear: 540/65R38 R1W (MI, FI, TR) Front: 440/65R28 R1W (MI, FI, TR)	M179872		2,336.00
75-W1371	7292889B2 7292756B2	Rear: 600/60R38 R1W (MI) Front: 480/60R28 R1W (MI)	M81004		1,052.00
75-W1257	7292859B2 7294785B2	Rear: 600/65R38 R1W (MI, FI, TR) Front: 480/65R28 R1W (MI, FI, TR)	M236082		3,066.00
75-W1487	7292894B2 7293780B2	Rear: 480/70R38 R1W (MI, FI, TR) Front: 380/70R28 R1W (MI, FI, TR)	M125510		1,630.00
75-W1299	7292897B2 7294786B2	Rear: 460/85R38 R1W (MI, FI, TR) Front: 380/85R28 R1W (MI, FI, TR)	M71533		929.00
75-W1606	7292895B2 7293776B2	Rear: 520/70R38 R1W (MI, FI, TR) Front: 420/70R28 R1W (MI, FI, TR)	M197890		2,570.00
75-W1476	7292871B2 7293767B2	Rear: 480/80R34 R1W (Nokian Industrial) Front: 400/80R24 R1W (Nokian Industrial)	M599060		7,780.00
75-W1511	7292872B2 7292890B2	Rear: 480/80R38 Industrial (Nokian Industrial) Front: 400/80R28 Industrial (Nokian Industrial)	M767459		9,967.00

MASSEY FERGUSON®

5700S Deluxe

(F.O.B. PORT OF ENTRY)

DELUXE EDITION FEATURES

ENGINE
MF5711S: 105 Rated Engine HP, 85 PTO HP, 110 Max Engine HP
MF5712S: 115 Rated Engine HP, 95 PTO HP, 120 Max Engine HP
MF5713S: 125 Rated Engine HP,105 PTO HP,130 Max Engine HP
AGCO POWER™ 4.4L (268 cu. in.) 4 Cylinder
- Air-to-Air Aftercooled, Common Rail Injection, Turbocharged
- Selective Catalytic Reduction (SCR) Technology
- Tier 4 Final EPA and CARB Certified

Electronic Engine Management (EEM) with Dual ERPM Settings
Electronic Controlled Viscous Fan Drive
Dual Element Dry Type Air Cleaner
Vertical Exhaust at Right Front Cab Post
Cooling System: Antifreeze to Minus 40C
Fuel Tank Capacity: 47.5 Gal (180 L)
DEF Tank Capacity: 6.6 Gal (25 L)

POWERTRAIN
Dyna-4 Transmission 25 MPH (40 KPH)
- 16F/16R Semi-Powershift, 4 Ranges with 4 Powershifts Per Range with AUTODRIVE
- Transmission Control T-Handle on Right Hand Armrest

Multi-Disc Wet Brakes
Power Differential Lock
Independent PTO:
- 540/540E/1000 with 6 and 21 Spline Shaft

Rear Fender Mounted PTO Shut-Off
Flange Axles

FRONT WHEEL ASSIST AXLE
4 WD Power Front Axle (PFA)
- 8 Bolt Pattern

Shielded Center Drive Line with Electro-Hydraulic Control and Front Wheel Drive Differential Lock

HYDRAULICS
Closed Center Load Sensing 29 GPM (110 L/min) Pump
2900 PSI (200 Bar) Maximum Pressure
Valves 1st & 2nd Electric, with Multi-Function Joystick on the Armrest
Valves 3rd & 4th Mechanical, with levers located in Right Hand Console
Hydrostatic Power Steering

HITCH
3-Point Hitch: Category 2/3 Telescopic Ball End Links
- Active Transport Control
- Lower Link Sensing
- Electronic Draft Control, Electronic Height Control, and Rate of Drop
- Variable Float Telescopic Stabilizers
- Left and Right Side External 3-Point Control

Drawbar: Category 2, Clevis and Drop Pin

ELECTRICAL SYSTEM
175 Amp Alternator
12 V Battery, 775 CCA (SAE)
7 Pin ASAE Rear Trailer Electrical Outlet
Electrical Isolator Switch and Jumpstart Point
110 V Engine Block Heater
Ignition with Neutral Start and Key Shutoff

LIGHTING
Four Front Hood Mounted Lights
Four Front Single Bulb Worklights
Two Rear Double Bulb Worklights
Worklights on Handrails and Rear Fenders
Taillights, Flashing Warning Lights and Turn Signals

INSTRUMENTS
Setup and Information Screen (SIS)
C1000 (Tractor Functions and Video) + FieldStar 5 (Isobus & Massey Ferguson Guide)
Tachometer: Digital and Analog
PTO Speed: Digital
Ground Speed Display: Digital
Fuel Level and Coolant Temp Gauges
Warning/Information Lights

OPERATOR AREA
OptiRide Passive Mechanical Suspension
6 Post Cab
Adjustable Steering Column with SpeedSteer
Front Sun Visor
Air Conditioning and Heater
Automatic Air Suspended Swivel Seat with Armrest and Seatbelt
Instructor Seat
Front and Rear Windshield Wiper/Washer
Dual Wide Angle Telescoping Outside Rearview Mirrors
Single Inside Rear View Mirror
Radio (MP3 compatible) with Two Audio Speakers and Antenna
Two Electrical Sockets in Cab
Speed Chart

WHEELS AND TIRES
Rear: 460/85R34 R1W 8 Lug Pressed Wheels
Front: 380/85R24 R1W Waffle Wheel

OTHER STANDARD FEATURES
Massey Ferguson Guide Ready (Verizon)
Massey Ferguson Connect Ready
TaskDoc
Pivoting Front Fenders, Standard Width
Hi VIS Front Hood, Single Piece Raising with Lockable Front Latch
Lockable Tool Box
SMV Sign
Molded Rear Fenders
English Op Manual

MF5713S - NOT FOR SALE IN STATE OF NEBRASKA

(F.O.B. PORT OF ENTRY)

LOADER FEATURES

FL.3723 FITS 5700, 6700 AND 5700SL SERIES TRACTORS

One Piece Main Frame Arms and Compression Molded Curved Cross Member
Quick Attach Implement Mounting with Euro Style Single Lever Locking System
5 mm High Tensile, Tapered Box Section Frame
70 mm Arm Profile
80 mm Double Acting Lift Cylinders **(FL.3723)**
80 mm Double Acting Bucket Cylinders **(FL.3723)**
Industrial Grade Hydraulic Fittings and Hoses, Incorporated Internally Inside Loader Boom
Central Valve, Equalized Oil Distribution Valve with Incorporated Relief Valves
4-Flat Face Hydraulic Tips on Boom and Bucket Circuits
Protective Hose Cover
Lock and Go Loader / Subframe Connection System
Pivots Are Greasable and Include Industrial Grade Pins and Bushings
Powder Painted with Corrosion Protection
Bucket Level Indicator
Front Bumper Guard (With Subframe Set)
Buckets Have Heavy Duty, Welded-On Cutting Edge, Box Beam Section for Stiffness and Torsional Rigidity and Lateral Reinforcing Bars
149" (3.79 m) Lift Height to Pivot Pin
FL.3723 : 5093 lb. (2310 kg) Lift Capacity to Full Height, 31.5",(800 mm) Forward of Pivot Pin per ASABE
301.3 @ 2828 PSI
Maximum Roll Back Angle: 58 Degrees
Maximum Dump Angle: 60 Degrees

FL.3819 FITS 5700, 6700 AND 5700SL SERIES TRACTORS

One Piece Main Frame Arms and Compression Molded Curved Cross Member
Quick Attach Implement Mounting with Euro Style Single Lever Locking System
5 mm High Tensile, Tapered Box Section Frame
70 mm Arm Profile
75 mm Double Acting Lift Cylinders **(FL.3819)**
80 mm Double Acting, Equal Displacement Bucket Cylinders **(FL.3819)**
Industrial Grade Hydraulic Fittings and Hoses, Incorporated Internally Inside Loader Boom
Central Valve, Equalized Oil Distribution Valve with Incorporated Relief Valves
4-Flat Face Hydraulic Tips on Boom and Bucket Circuits
Protective Hose Cover
Lock and Go Loader / Subframe Connection System
Pivots Are Greasable and Include Industrial Grade Pins and Bushings
Powder Painted with Corrosion Protection
Bucket Level Indicator
Front Bumper Guard (With Subframe Set)
Buckets Have Heavy Duty, Welded-On Cutting Edge, Box Beam Section for Stiffness and Torsional Rigidity and Lateral Reinforcing Bars
149" (3.79 m) Lift Height to Pivot Pin
FL.3819 : 4255 lb. (1930 kg) Lift Capacity to Full Height, 31.5", (800 mm) Forward of Pivot Pin per ASABE
301.3 @ 2828 PSI
Maximum Roll Back Angle: 58 Degrees
Maximum Dump Angle: 60 Degrees

MF5713S - NOT FOR SALE IN STATE OF NEBRASKA

5700S Deluxe

(F.O.B. PORT OF ENTRY)

Order Code	Catalog Number	Description	Factory Code	Approx. Weight (lb.)	List Price
		ONE ORDER CODE FROM EACH GROUP MUST BE SPECIFIED. (Unless n Base Option is desired)			
BASE MACHINE					
MF5711S~EF~07	7292307	Massey 5711S Deluxe Tractor 85 PTO HP	M9799944		127,272.00
MF5712S~EF~07	7292308	Massey 5712S Deluxe Tractor 95 PTO HP	M10160535		131,955.00
MF5713S~EF~07	7292309	Massey 5713S Deluxe Tractor 105 PTO HP	M10521203		136,639.00
TRANSMISSION OPTION					
	Base	Dyna-4 Transmission with 16F/16R gears 25 MPH (40 KPH) with AUTO-DRIVE			**In Base**
35-EN002	7292064	Creeper Gear (14:1 Reduction)	M209209		2,717.00
INSTRUMENT PANEL					
175-BA053	Base	C1000 (Tractor Functions and Video) + FieldStar 5 (Isobus & Massey Ferguson Guide) All XR options available			**In Base**
175-BA051	7295450	FieldStar 5 (Isobus and Massey Ferguson Guide) All XR options available	(M06160)		(80.00)
175-BA024	7295351	C1000 (Tractor Functions and Video)	(M160160)		(2,080.00)
175-BA003	7295449	System Information Screen with Radar (For Actual Ground Speed and Slip Control)	(M570108)		(7,404.00)
175-BA005	7295448	System Information Screen	(M634788)		(8,244.00)
MASSEY FERGUSON GUIDE					
300-XR341*	7295653**	Massey Ferguson Guide Ready Package (Verizon) Verizon Cellular Network when using NTRIP and Task Doc Pro			**In Base**
300-XR000	7295649	Less Massey Ferguson Guide (Requires Less SpeedSteer)	(M346500)		(4,500.00)
300-XR342*	7295654	Massey Ferguson Guide Standard (Verizon) with Novatel Smart7 Receiver Pass-to-Pass Accuracy of +/- 20 cm (+/- 8 inch) For correction signal WAAS (no subscription needed)	M211750		2,750.00
300-XR346*	7295655	Massey Ferguson Guide Standard (Verizon) Trimble® AG-382 Receiver Pass-to-Pass Accuracy of +/- 20 cm (+/- 8 inch) For correction signal WAAS (no subscription needed)	M273350		3,550.00
300-XR301*	7295650**	Massey Ferguson Guide Ready Package (GSM) Suggested for Canada and US where Verizon is not preferred when using NTRIP and Task Doc Pro			No Charge
300-XR302*	7295651	Massey Ferguson Guide Standard (GSM) with Novatel Smart7 Receiver Pass-to-Pass Accuracy of +/- 20 cm (+/- 8 inch) For correction signal WAAS (no subscription needed)	M211750		2,750.00
300-XR306*	7295652	Massey Ferguson Guide Standard (GSM) Trimble® AG-382 Receiver Pass-to-Pass Accuracy of +/- 20 cm (+/- 8 inch) For correction signal WAAS (no subscription needed)	M273350		3,550.00

***REQUIRES SPEEDSTEER AD004**

****TO COMPLETE MF GUIDE, ORDER FIELDSTAR 5 AND MF GUIDE RECEIVER FROM PARTS**

SPEEDSTEER					
185-AD004	Base	SpeedSteer Option Mandatory with Massey Ferguson Guide Ready Not Compatible with Less Massey Ferguson Guide- XR000			**In Base**
185-AD002	7293558	Less SpeedSteer	(M202510)		(2,630.00)

Order Code	Catalog Number	Description	Factory Code	Approx. Weight (lb.)	List Price
TELEMETRY					
160-BS002	Base	Massey Ferguson Connect Ready			**In Base**
160-BS119*	7295662	Massey Ferguson Connect Basic Package (Verizon) Verizon Cellular Network when using Massey Ferguson Connect	M136367		1,771.00
160-BS019*	7295660	Massey Ferguson Connect Basic Package (GSM) Suggested for Canada and US where Verizon is not preferred when using Massey Ferguson Connect	M136367		1,771.00
*** 5 YEAR SUBSCRIPTION, MUST BE ACTIVATED WITHIN 12 MONTHS OF WARRANTY REGISTRATION**					
PTO					
	Base	540/540E/1000 RPM PTO with Economy PTO 540 RPM 6 Spline and 1000 RPM 21 Spline			**In Base**
100-LA032	7292252	540/1000RPM flanged PTO, In Cab Control - 6/21 Spline Studs	(M41734)		(542.00)
FRONT HITCH					
	Base	Less Front Hitch			**In Base**
230-F1119	7292199	3,968 lbs (1800 kg) Front Hitch with Couplers Requires 3 or more Auxiliary Valves	M447678		5,814.00
230-F1149	7292234	3,968 lbs (1800 kg) Front Hitch with Couplers and Front PTO (21 Spline) Requires 3 or more Auxiliary Valves	M1103795		14,335.00
REAR 3-POINT HITCH					
	Base	Category 2/3 Hitch with Telescopic Ball End Links			**In Base**
95-GC022	7293572	Category 3 Hitch with Hook End Links and Cat 2/3 Balls and Cones			No Charge
LOADER PROVISION					
	Base	Less Loader Provisions			**In Base**
350-S3002	7292311	Front Loader Provisions including Hydraulic and Subframe, also includes: DP100 - 26 GPM Twin Flow Open Center System KX012 - 2 Electric Valves with Multi-Function Joystick MU014 - 3rd and 4th Mechanical Valves	M211519		2,747.00
350-S3003	7292312	Front Loader Provisions including Hydraulic and Subframe, also includes: DP110 - 29 GPM Closed Center Load Sensing KX012 - 2 Electric Valves with Multi-Function MU012 - 3rd and 4th Mechanical Valves	M506198		6,574.00
LOADER OPTIONS - (For Additional Loader Options, Refer to Implements Price List Revision)					
For Factory Loader Ready Tractors - Requires LL001 (which is included in S3002)					
	Non Self-Leveling				
	7296240	MFFL.3723 Loader - Euro Style, Includes Soft Drive with Electric Shutoff	M556864		7,232.00
	Mechanical Self-Leveling				
	7296236	MFFL.3819 Loader - Euro Style, Includes Soft Drive with Electric Shutoff	M715099		9,287.00
BUCKET OPTIONS - Recommended with Loader Packages Only					
	Euro Style				
	72556223ML	83-inch Material Bucket 210S, 19 cu ft (0.70 cu yds)	M98175	496	1,155.00
	72556038ML	83-inch Material Bucket 210H, 24 cu ft (0.89 cu yds) Requires MFFL.3723 or MFFL.3819 Loader	M109879	556	1,427.00

(F.O.B. PORT OF ENTRY)

Order Code	Catalog Number	Description	Factory Code	Approx. Weight (lb.)	List Price
ARMREST CONTROL					
30-EC021	Base	"T" Lever Control on Armrest			**In Base**
30-EC022	7295276	Power Control Shuttle - MultiPad Lever on Armrest	M93016		1,208.00
❖ **AUXILIARY HYDRAULIC FLOW**					
370-DP110	Base	29 GPM (110 L/min) Closed Center Load Sensing (Not compatible with 2 wd Front Axle)			**In Base**
370-DP100	7292299	26 GPM (98 L/min) Twin Flow Open Center System	(M284823)		(3,699.00)

VALID COMBINATIONS	
DP100	**DP110**
KX012 + MU014	Base - KX012 + MU012
KX011 + MU014	KX011 + MU012

❖ **AUXILIARY VALVE 1 & 2**					
50-KX012	Base	2 Electrically Controlled Valves with Multi-Function Joystick on the Armrest			**In Base**
50-KX011	7292301	2 Electrically Controlled Valves with Fingertip Controlled Spool Valves, Fingertips Located in Armrest			No Charge
❖ **AUXILIARY VALVE 3 & 4**					
55-MU012	Base	3rd and 4th Mechanically Controlled Valves with Levers located in Right Hand Console (1st and 2nd - Flow Dividing, Kickout, Zero Leak, Float)			**In Base**
55-MU014	7292333	3rd and 4th Mechanically Controlled Valves with Levers Located in Right Hand Console (1st - Single Acting/Double Acting, Flow Dividing, Kickout and 2nd - Double Acting, Kickout, Float)	(M11550)		(150.00)

❖ Please note that Loader Provisions S3002 and S3003 include key hydraulic components and may require this option group to be left blank

POWER BEYOND					
	Base	Less Power Beyond			**In Base**
90-GR010	7292197	Power Beyond Couplers P/T/LS. Requires (DP110) 29 GPM Closed Center Load Sensing	M59598		774.00

(F.O.B. PORT OF ENTRY)

Order Code	Catalog Number	Description	Factory Code	Approx. Weight (lb.)	List Price
SEAT OPTIONS					
	Base	Air Suspended Seat - Automatic Adjustment			**In Base**
125-AE042	7293546	Superluxe Grammar Seat	M147840		1,920.00
CAB OPTIONS					
140-AI020	7293077	Standard Cab Roof with Roof Hatch	M21868		284.00
140-E1022	7293078	Visio Roof, Includes 2 Front Double Bulb and 2 Rear Double Bulb Worklights Not Compatible with AQ004 - Auto AC A0150 Worklamp Option Massey Ferguson Guide - XR301/XR341	M127050		1,650.00
140-A0142	7292261	Visio Roof, Includes 2 Front LED Double Bulbs and 2 Rear LED Double Bulb Worklights Not Compatible with: A0150 Worklamp Option Massey Ferguson Guide - XR301/XR341	M190960		2,480.00
115-AM015	7292187	Less Cab Suspension	(M141988)		(1,844.00)
120-AQ004	7293082	Automatic Climate Control Not Compatible with E1022 Visio Roof	M89474		1,162.00
145-AL008	7293692	Telescopic Large Side Mirrors	(M28413)		(369.00)
145-AL033	7295280	Telescopic Wide Angle Mirrors with Electric De-icing and Adjust.	M40425		525.00
RADIO					
365-AF011	Base	Radio (CD Player, MP3 Compatible)			**In Base**
365-AF001	7295157	Two Audio Speakers and Antenna	(M42350)		(550.00)
ELECTRICAL					
220-CE020	7292190	175 Amp Alternator			**In Base**
220-CE015	7292191	120 AMP Alternators	(M17633)		(229.00)
215-CB000	7293593	Less Engine Block Heater	(M17094)		(222.00)
LIGHTING					
205-VF013	7293103	Dual Roof-Mounted Rotating Beacons, Left and Right Includes SAE SMV sign	M41811		543.00
195	Base	4 Single Bulb Front Worklights, 2 Double Bulb Rear Worklights, Worklights on Handrails and Rear Fenders			**In Base**
195-A0150	7292262	4 LED Front Worklights, 2 LED Rear Worklights LED Worklights on Front Hood, Handrails and Rear Fenders	M215138		2,794.00
BRAKES					
250-GS001	7293100	Hydraulic Trailer Brakes	M67452		876.00
250-GS062	7293551	Pneumatic Trailer Brakes	M536767		6,971.00
MISCELLANEOUS					
225-LQ001	7293553	Ecology Drain and Engine Water Separator.	M37345		485.00
275-TC005	7294210	French Language OIB.			No Charge
275-TC011	7294211	Spanish Language OIB			No Charge

(F.O.B. PORT OF ENTRY)

Order Code	Catalog Number	Description	Factory Code	Approx. Weight (lb.)	List Price
REAR WHEEL WEIGHTS					
325-RD002	7293328	2 Sets of 110 LBS (50 KG) weights (4 weights total) . . Mounts Externally to Wheel Only Available on Welded Rims (Non Adjustable)	M47586	1102	618.00
DEALER INSTALLED FRONT WEIGHTS					
	5020186M	8 x 55 KG (121 lbs.) Front Weights	M123739	968	1,607.00
	5020187M	10 x 55 KG (121 lbs.) Front Weights	M153230	1210	1,990.00
PIVOTING FRONT FENDERS					
	Base	Pivoting Front Fenders - Standard Width . . . . . Width depends on tire selection; see Chart Below			**In Base**
155-WE111	7293598	Pivoting Front Fenders - Wide Width . . . . . Width depends on tire selection; see Chart Below	M24871		323.00

Pivoting Front Fender Size		
Standard	**Wide**	**Tire Sizes**
320 mm	355 mm	320/70R24 320/85R24 (12.4R24)
355 mm	380 mm	340/85R24 (13.6R24) 340/85R28 (13.6R28)
380 mm	410 mm	380/70R24 380/70R28 380/85R24 (14.9R24) 380/85R28 (14.9R28) 400/80R24 400/80R28
410 mm	470 mm	420/70R24 420/70R28 440/65R24 440/65R28
470 mm	520 mm	480/65R24 480/65R28
520 mm	620 mm	VF480/60R28 VF520/60R28

REAR FENDERS					
	Base	Rear Fenders without Extensions, 78.74"(2.00 M) . . .			**In Base**
255-WD013	7293450	Rear Fenders with Extensions, 78.74"(2.00 M)	M104874		1,362.00
255-WD017	7293107	Wide Fender -90.55" (2.3 M) with Rear Extension . . .	M106029		1,377.00

(F.O.B. PORT OF ENTRY)

Order Code	Catalog Number	Description	Factory Code	Approx. Weight (lb.)	List Price
FRONT AXLE					
	Base	4wd Power Front Axle			**In Base**
65-NA032	7293408	Suspended Front Axle	M569261		7,393.00
TIRE BRAND SELECTION					
70-Blank	7294212	Factory Brand Choice			No Charge
70-T0001	7294195	Michelin (MI) Brand Required	M150150		1,950.00
70-T0007	7294197	Firestone (FI) Brand Required	M94633		1,229.00
70-T0010	7294198	Trelleborg (TR) Brand Required	M94633		1,229.00
FRONT AND REAR TIRES					
		4WD - 8 Lug Steel - Set of 2			
75-Base	7292862B2 7293774B2	Rear: 18.4R34 R1W (MI, FI, TR) Front: 14.9R24 R1W (MI, FI, TR)			**In Base**
75-W1662	7292861B2 7293760B2	Rear: 18.4R30 R1W (MI) Front: 13.6R24 R1W (MI, FI, TR)	(M39347)		(511.00)
75-W1694	7292877B2 7293760B2	Rear: 16.9R34 R1W (MI, FI, TR) Front: 13.6R24 R1W (MI, FI)	(M66220)		(860.00)
75-W1695	7292878B2 7293773B2	Rear: 480/70R34 R1W (MI, TR) Front: 380/70R24 R1W (MI, FI)	M31955		415.00
75-W1664	7292863B2 7293761B2	Rear: 16.9R38 R1W (MI, FI, TR) Front: 13.6R28 R1W (MI, FI, TR)	(M09240)		(120.00)
75-W1700	7292881B2 7293780B2	Rear: 480/70R38 R1W (MI, FI, TR) Front: 380/70R28 R1W (MI, FI, TR)	M102179		1,327.00
75-W1297	7292864B2 7294786B2	Rear: 460/85R38 R1W (MI, FI, TR) Front: 380/85R28 R1W (MI, FI, TR)	M124355		1,615.00
		Welded Steel Standard Offset with Spacers - Set of 2			
75-W1286	7292858B2 7293757B2	Rear: 540/65R38 R1W (MI, FI, TR) Front: 440/65R28 R1W (MI, FI, TR)	M179872		2,336.00
75-W1371	7292889B2 7292756B2	Rear: 600/60R38 R1W (MI) Front: 480/60R28 R1W (MI)	M81004		1,052.00
75-W1257	7292859B2 7294785B2	Rear: 600/65R38 R1W (MI, FI, TR) Front: 480/65R28 R1W (MI, FI, TR)	M236082		3,066.00
75-W1487	7292894B2 7293780B2	Rear: 480/70R38 R1W (MI, FI, TR) Front: 380/70R28 R1W (MI, FI, TR)	M125510		1,630.00
75-W1299	7292897B2 7294786B2	Rear: 460/85R38 R1W (MI, FI, TR) Front: 380/85R28 R1W (MI, FI, TR)	M71533		929.00
75-W1606	7292895B2 7293776B2	Rear: 520/70R38 R1W (MI, FI, TR) Front: 420/70R28 R1W (MI, FI, TR)	M197890		2,570.00
75-W1476	7292871B2 7293767B2	Rear: 480/80R34 R1W (Nokian Industrial) Front: 400/80R24 R1W (Nokian Industrial)	M599060		7,780.00
75-W1511	7292872B2 7292890B2	Rear: 480/80R38 Industrial (Nokian Industrial) Front: 400/80R28 Industrial (Nokian Industrial)	M767459		9,967.00

RESERVED

MASSEY FERGUSON®

MF 6700
GLOBAL SERIES

MASSEY FERGUSON®

MF 6700 PLATFORM

(F.O.B. PORT OF ENTRY)

DELUXE TRACTOR FEATURES

ENGINE SYSTEM
- 4.4L 4-Cylinder AGCO Power
- EPA Tier 4 Final and CARB Certified
- Air Cleaner: Dual Element Dry Type
- Air Cleaner Intake, Under Hood
- Vertical Exhaust
- Cooling System: Antifreeze 50/50 Mix
- Cold Starting Aid: Intake Heater

HORSEPOWER
(Max Engine @ 2000 RPM; Rated Engine & PTO @ 2200 RPM)

MF6712 Deluxe Powershuttle:
120 Max Engine HP, 115 Engine HP, 99 PTO HP

MF6713 Deluxe Powershuttle:
130 Max Engine HP, 125 Engine HP, 109 PTO HP

FRONT AXLE
- 4wd: Dana 730 Center Driveline, Open Differential, Standard Hydraulically Actuated Differential Lock Push Button 4WD Engagement

POWERTRAIN
- Transmission: 25 mph (40 kph) 12 X 12 Power Shuttle with Electro-Hydraulic Shuttle Lever, 6 Synchronized Gears, 2 Ranges
- Rear Axle: Inboard Planetary Final Drives, with Push Button Operated Mechanical Differential Lock, Flanged Rear Axle
- Brakes: Independent Oil Immersed Wet Disc Brakes with Independent Foot Pedal Operation
- Hook and Lever Parking Brake
- PTO: Independent 540/540E/1000 RPM Speeds, 6 and 21 Spline Flanged Shafts standard (1.375 In. Diameter), Independent Wet Disc Clutch, Electro-hydraulic Engagement

HYDRAULIC SYSTEM
- Implement System: Open Center System, Engine Driven Gear Pump, 15.1 GPM, combined to 26 GPM (98 LPM) Flow Optional Cable-controlled Loader Joystick with Mid Valves
- 2 Mechanical Controlled Spool Valves (1 x DA KO FL + 1 x DA KO FL)
- Rear Linkage: ASAE Category III / II with Telescopic Ball Ends Lift Capacity at 24": 9392 lbs (4260 kg) 2 Adjustable Rear Linkage Turnbuckles, Top Line Draft Sensing Standard Telescopic Stabilizers
- Swing Offset Drawbar with 350/400/500mm Positions, Cat 2 Clevis

ELECTRICAL
- 12 Volt DC, Negative Ground
- Intake Air Pre Heater
- High Capacity Wet Charge, Maintenance Free SAE 720 CCA Battery
- 80 AMP Alternator
- Ignition: Key with Safety Start
- Keyed Engine Shutoff
- Lighting: 4 Headlights, 2 Rear Marker Light Assemblies
- 2 Mid Mounted Worklights
- Engine RPM Memory Switch
- Rear Brake Lights
- Standard 1 Rear Work Light
- 7 Pin ASAE Outlet Socket
- 30 Amp Auxiliary Electrical Socket

INSTRUMENTS
- Digital and Analog Dash Display with Performance Monitor
- Analog Engine Tachometer
- Analog Fuel Gauge
- Analog Engine Temperature
- Digital Transmission Display
- Digital Hour Meter
- Operation and Service Lights

OPERATOR ENVIRONMENT (PLATFORM MODELS)
- Flat Floor Platform - ISO Mounted
- Rubber Floor Mat
- Hand Rails with Glass Heat Shields
- Lever Controlled 3-Point Linkage with Easy Lift/Lower Option and Draft Control
- 2 Post Folding ROPS
- Tilt Steering Column
- Mechanical Spring Suspension Seat with Armrests
- Retractable Seat Belt
- Cup Holder
- Pendant Style (Suspended) Foot Pedals
- Hand and Foot Throttle
- Left Side and Right Side Foot Step Entry
- External 3-Point Lift Control on Left Hand Side Fender

OTHER STANDARD FEATURES
- One-Piece Tilting Hood
- Rear Fender Side Extensions
- Fuel Tank Guard
- Rear Oil Catcher
- Tool Box
- SMV Sign

MF6713 NOT FOR SALE IN STATE OF NEBRASKA

MF 6700 PLATFORM

MASSEY FERGUSON®

(F.O.B. PORT OF ENTRY)

LOADER FEATURES

MF941X AND MF946X LOADERS
FITS ALL MF5700 / MF6700 GLOBAL SERIES TRACTORS

- One Piece Main Frame with Tapered Arms and Single Cross Member, Powder Painted with Corrosion Protection
- Quick Attach Loader Frame Mount with Pin Lock and Built in Parking Stands
- 5 mm High Tensile, Tapered Box Section Frame
- 70 mm Arm Profile
- 75 mm Double Acting Lift Cylinders **(MF941X)**
- 70 mm Double Acting Lift Cylinders **(MF946X)**
- 75 mm Double Acting Bucket Cylinders **(MF941X)**
- 75 mm Double Acting Bucket Cylinders, Equal Displacement **(MF946X)**
- Hydraulic Lines Routed Inside Main Frame for Protection and Visibility
- Pivots have Recessed Greasable Galvanized Steel Pins with Bushings at Key Points
- 4-Flat Face Hydraulic Tips on Boom and Bucket Circuits
- Protective Hose Cover
- Bucket Level Indicator
- **MF941X:** 2220 lbs (1007 kg) Lift Capacity to Full Height, 31.5 inches, (800 mm) Forward of Pivot Pin per ASABE 301.3 at 2828 PSI
- **MF946X:** 3500 lbs (1588 kg) Lift Capacity to Full Height, 31.5 inches, (800 mm) Forward of Pivot Pin per ASABE 301.3 at 2828 PSI
- Maximum Lift Height: 148 inches at Pivot
- Rated Hydraulic Pressure: 2828 PSI
- Maximum Roll Back Angle: 49 Degrees
- Maximum Dump Angle: 42 Degrees
- Universal Euro Hook Type Implement Attachments
- Grille Guard Standard

MFFL.3723 AND MFFL.3819 LOADERS
FITS ALL MF5700 / MF6700 GLOBAL SERIES TRACTORS

- One Piece 5 mm High Tensile Main Frame with Tapered and Emboss Arms
- Quick Attach Implement Mounting with Euro Style Single Lever Locking System
- 80 mm Arm Profile
- 80 mm Double Acting Lift Cylinders **(FL.3723)**
- 75 mm Double Acting Lift Cylinders **(FL.3819)**
- 80 mm Double Acting Bucket Cylinders **(FL.3723)**
- 80 mm Double Acting, Equal Displacement Bucket Cylinders **(FL.3819)**
- Industrial Grade Hydraulic Fittings and Twin Braided Hoses, Incorporated Internally Inside Loader Boom
- Central Valve, Equalized Oil Distribution Valve with Incorporated Relief Valves
- 4-Flat Face Hydraulic Tips on Boom and Bucket Circuits
- Protective Hose Cover
- Powder Painted with Corrosion Protection
- Bucket Level Indicator
- Lock and Go Loader / Subframe Connection System
- Pivots Are Greasable and Include Industrial Grade Pins and Bushings
- Front Bumper Guard (with Subframe Set)
- Buckets Have Heavy Duty, Welded-On Cutting Edge, Box Beam Section for Stiffness and Torsional Rigidity and Lateral Reinforcing Bars
- 149" (3.79 m) Lift Height to Pivot Pin
- **FL.3723**: 2840 lbs (1288 kg) Lift Capacity to Full Height, 31.5",(800 mm) Forward of Pivot Pin per ASABE 301.3 @ 2828 PSI
- **FL.3819**: 4230 lbs (1919 kg) Lift Capacity to Full Height, 31.5", (800 mm) Forward of Pivot Pin per ASABE 301.3 @ 2828 PSI
- Maximum Roll Back Angle: 58 Degrees
- Maximum Dump Angle: 60 Degrees

MF 6700 PLATFORM

(F.O.B. PORT OF ENTRY)

Feature Code	Description	Factory Code	Approx. Weight (lb.)	List Price

ONE *FEATURE CODE* FROM EACH GROUP MUST BE SPECIFIED (Unless In Base Option is Desired)

BASE MACHINE

DELUXE PLATFORM MODELS

4wd

MF6712~ES	Massey Ferguson 6712	23C57210		74,299.00
MF6713~ES	Massey Ferguson 6713 **NOT FOR SALE IN NEBRASKA**	23C59058		76,699.00

ALL Tractors will be charged $325 for Assembly

LOADER PROVISION

350-LL000	Without Loader Provision			**In Base**
350-LL001	Front Loader Provision includes Frame Rails, Uprights, Subframe, Hydraulic Kit with Joystick and Valve,and Grille Guard	16C3548		4,608.00

LOADER OPTIONS

Note: MF941X/946X Loaders are not Compatible with 28-inch Front Tires

For Factory Loader Ready Tractors - Requires LL001

Non Self-Leveling

7296139	MF941X Loader - Euro Style, w/Hose Extension Kit.	89C4651	794	6,033.00
7296239	MFFL.3723 Loader - Euro Style, Includes Soft Drive with Electric Shutoff and Hose Extension Kit	64C5840		7,552.00

Mechanical Self-Leveling

7296143	MF946X Loader - Euro Style, with Hose Extension Kit	29C5514	926	7,153.00
7296235	MFFL.3819 Loader - Euro Style, Includes Soft Drive with Electric Shutoff and Hose Extension Kit	99C7422		9,607.00

Note: For Additional Loader Options, Refer to Implements Price List Revision

BUCKET OPTIONS - Recommended with Loader Packages Only

Euro Style

72537003ML	83-inch Heavy Duty Material Bucket - SM 210 (Recommended for MF941X-946X Loaders)	75C981		1,155.00
72537006ML	83-inch Material Bucket - GM 215 (Recommended for MFFL.3723 or .3819 Loaders)	79C1098		1,427.00

(F.O.B. PORT OF ENTRY)

Feature Code	Description	Factory Code	Approx. Weight (lb.)	List Price

TIRE BRAND SELECTION

70-Base	Trelleborg Brand			No Charge

FRONT AND REAR TIRES

NOTE: Tire Options not In Base are Subject to Extended Factory Lead Time of Approximately 120 Days

4WD - Flange Axle - Set of 2

TIRES FOR 6712 AND 6713

75-W1882	Rear: 460/85R38 (18.4R38) R1W Front: 380/85R28 (14.9R28) R1W			**In Base**
	Note: 28-inch Front Tires are not Compatible with MF941X/946X Loaders			
75-W1880	Rear: 460/85R34 (18.4R34) R1W Front: 380/85R24 (14.9R24) R1W	(24C1241)		(1,612.00)
75-W5990	Rear Shipping Wheel Front Shipping Wheel	(72C5879)		(7,636.00)

NOTE: The tires listed below can only be ordered once the shipping wheel option above is selected. The price deduct for the shipping wheels will be netted with the list price increase for the tire configurations shown below, on the tractor invoice. The tire configurations shown below will be installed at the Assembly Center and delivered to the dealer. The shipping wheels will not be delivered separately to the dealer, only the Low Profile Wheels & Tires will be. The process must work this way for internal systems reasons.

ACTWLS1	Rear: 19.5L-24 10 Ply R4 Front: 12.5/80-18 14 Ply R4	80C2802		3,640.00
ACTWLS3	Rear: 18.4-26 12 Ply R1 Front: 11.2-24 8 Ply R1	28C3283		4,264.00

CREEPER GEAR

35-EN000	Without Creeper Gear			**In Base**
35-EN002	Creeper Gear (13.68:1 Reduction) **(Extended Factory Lead Time Approximately 160 Days)**	93C1161		1,509.00

MISCELLANEOUS

275-TC025	English Language Operator's Manual - 6700 Platform Tractor			**In Base**

ASSEMBLY CENTER MISCELLANEOUS OPTIONS

ACWTPKG1	100kg Weight Adapter Package	95C257		335.00
ACWTPKG2	100kg Stackable Rear Wheel Weight Package (order quantity 1 or 2) (Requires Adapter Package ACWTPKG1 to Install)	95C257		335.00
FROPML6	French Language Operator Manual - 6700 Platform Tractor			No Charge

MASSEY FERGUSON®

MF 6700 CAB

(F.O.B. PORT OF ENTRY)

DELUXE TRACTOR FEATURES

ENGINE SYSTEM
- 4.4L 4-Cylinder AGCO Power
- EPA Tier 4 Final and CARB Certified
- Air Cleaner: Dual Element Dry Type
- Air Cleaner Intake, Under Hood
- A-Pillar Exhaust with Heat Shield
- Cooling System: Antifreeze 50/50 Mix
- Cold Starting Aid: Intake Heater

HORSEPOWER
(Max Engine @ 2000 RPM; Rated Engine & PTO @ 2200 RPM)

MF6712 Deluxe Powershuttle:
120 Max Engine HP, 115 Engine HP, 99 PTO HP

MF6713 Deluxe Powershuttle:
130 Max Engine HP, 125 Engine HP, 109 PTO HP

FRONT AXLE
- 4wd: Dana 720 Center Driveline, Open Differential, Standard Hydraulically Actuated Differential Lock Push Button 4WD Engagement

POWERTRAIN
- Transmission: 25 mph (40 kph) 12 X 12 Power Shuttle with Electro-Hydraulic Shuttle Lever, 6 Synchronized Gears, 2 Ranges
- Rear Axle: Inboard Planetary Final Drives, with Push Button Operated Mechanical Differential Lock, Flanged Rear Axle
- Brakes: Independent Oil Immersed Wet Disc Brakes with Independent Foot Pedal Operation
- Hook and Lever Parking Brake
- PTO: Independent 540/540E/1000 RPM Speeds, 6 and 21 Spline Flanged Shafts standard (1.375 In. Diameter), Independent Wet Disc Clutch, Electro-hydraulic Engagement

HYDRAULIC SYSTEM
- Implement System: Open Center System, Engine Driven Gear Pump, 15.1 GPM, combined to 26 GPM (98 LPM) Flow, Optional Cable-controlled Loader Joystick with Mid Valves and 3rd Function Ready Buttons
- 2 Mechanical Controlled Spool Valves (1 x DA KO FL + 1 x DA KO FL)
- Rear Linkage: ASAE Category III / II with Telescopic Ball Ends Lift Capacity at 24": 9392 lbs (4260 kg) 2 Adjustable Rear Linkage Turnbuckles, Top Link Draft Sensing Standard Telescopic Stabilizers
- Swing Offset Drawbar with 350/400/500mm Positions, Cat 2 Clevis

ELECTRICAL
- 12 Volt DC, Negative Ground
- Intake Air Pre Heater
- High Capacity Wet Charge, Maintenance Free SAE 720 CCA Battery
- 120 AMP Alternator
- Ignition: Key with Safety Start
- Keyed Engine Shutoff
- Lighting: 4 Headlights, 2 Rear Marker Light Assemblies
- 2 Mid Mounted Worklights
- Engine RPM Memory Switch
- Rear Brake Lights
- 7 Pin ASAE Outlet Socket
- 30 Amp Auxiliary Electrical Socket

INSTRUMENTS
- Digital and Analog Dash Display with Performance Monitor
- Analog Engine Tachometer
- Analog Fuel Gauge
- Analog Engine Temperature
- Digital Transmission Display
- Digital Hour Meter
- Operation and Service Lights

OPERATOR ENVIRONMENT (CAB MODELS)
- Standard Cab Roof, HVAC with Manual Controls, 2 Low Mounted Doors, Aerial and Speakers, 2 Front and 2 Rear Roof Mounted Work Lights
- Electric Controlled 3-Point Linkage with Draft Control
- Rubber Floor Mat
- Telescopic Large Side Mirrors
- Internal Mirror
- Dual Adjustment Steering Column (Tilting and Telescopic)
- Air Suspended Swiveling Seat with Armrests
- Retractable Seat Belt
- Instructors Seat
- Cup Holder
- Pendant Style (Suspended) Foot Pedals
- Hand Rails
- Hand and Foot Throttle
- Left Side and Right Side Foot Step Entry
- External 3-Point Lift Control on Left/Right Hand Side Fenders
- Rear Wiper/Washer

OTHER STANDARD FEATURES
- One-Piece Tilting Hood
- Rear Fender Side Extensions
- Fuel Tank Guard
- Rear Oil Catcher
- Tool Box
- SMV Sign

MF6713 NOT FOR SALE IN STATE OF NEBRASKA

MF 6700 CAB

MASSEY FERGUSON®

(F.O.B. PORT OF ENTRY)

LOADER FEATURES

MF941X AND MF946X LOADERS
FITS ALL MF5700 / MF6700 GLOBAL SERIES TRACTORS

- One Piece Main Frame with Tapered Arms and Single Cross Member, Powder Painted with Corrosion Protection
- Quick Attach Loader Frame Mount with Pin Lock and Built in Parking Stands
- 5 mm High Tensile, Tapered Box Section Frame
- 70 mm Arm Profile
- 75 mm Double Acting Lift Cylinders **(MF941X)**
- 70 mm Double Acting Lift Cylinders **(MF946X)**
- 75 mm Double Acting Bucket Cylinders **(MF941X)**
- 75 mm Double Acting Bucket Cylinders, Equal Displacement **(MF946X)**
- Hydraulic Lines Routed Inside Main Frame for Protection and Visibility
- Pivots have Recessed Greasable Galvanized Steel Pins with Bushings at Key Points
- 4-Flat Face Hydraulic Tips on Boom and Bucket Circuits
- Protective Hose Cover
- Bucket Level Indicator
- **MF941X:** 2220 lbs (1007 kg) Lift Capacity to Full Height, 31.5 inches, (800 mm) Forward of Pivot Pin per ASABE 301.3 at 2828 PSI
- **MF946X:** 3500 lbs (1588 kg) Lift Capacity to Full Height, 31.5 inches, (800 mm) Forward of Pivot Pin per ASABE 301.3 at 2828 PSI
- Maximum Lift Height: 148 inches at Pivot
- Rated Hydraulic Pressure: 2828 PSI
- Maximum Roll Back Angle: 49 Degrees
- Maximum Dump Angle: 42 Degrees
- Universal Euro Hook Type Implement Attachments
- Grille Guard Standard

MFFL.3723 AND MFFL.3819 LOADERS
FITS ALL MF5700 / MF6700 GLOBAL SERIES TRACTORS

- One Piece 5 mm High Tensile Main Frame with Tapered and Emboss Arms
- Quick Attach Implement Mounting with Euro Style Single Lever Locking System
- 80 mm Arm Profile
- 80 mm Double Acting Lift Cylinders **(FL.3723)**
- 75 mm Double Acting Lift Cylinders **(FL.3819)**
- 80 mm Double Acting Bucket Cylinders **(FL.3723)**
- 80 mm Double Acting, Equal Displacement Bucket Cylinders **(FL.3819)**
- Industrial Grade Hydraulic Fittings and Twin Braided Hoses, Incorporated Internally Inside Loader Boom
- Central Valve, Equalized Oil Distribution Valve with Incorporated Relief Valves
- 4-Flat Face Hydraulic Tips on Boom and Bucket Circuits
- Protective Hose Cover
- Powder Painted with Corrosion Protection
- Bucket Level Indicator
- Lock and Go Loader / Subframe Connection System
- Pivots Are Greasable and Include Industrial Grade Pins and Bushings
- Front Bumper Guard (with Subframe Set)
- Buckets Have Heavy Duty, Welded-On Cutting Edge, Box Beam Section for Stiffness and Torsional Rigidity and Lateral Reinforcing Bars
- 149" (3.79 m) Lift Height to Pivot Pin
- **FL.3723**: 2840 lbs (1288 kg) Lift Capacity to Full Height, 31.5",(800 mm) Forward of Pivot Pin per ASABE 301.3 @ 2828 PSI
- **FL.3819**: 4230 lbs (1919 kg) Lift Capacity to Full Height, 31.5", (800 mm) Forward of Pivot Pin per ASABE 301.3 @ 2828 PSI
- Maximum Roll Back Angle: 58 Degrees
- Maximum Dump Angle: 60 Degrees

MF 6700 CAB

(F.O.B. PORT OF ENTRY)

Feature Code	Description	Factory Code	Approx. Weight (lb.)	List Price

ONE *FEATURE CODE* FROM EACH GROUP MUST BE SPECIFIED (Unless In Base Option is Desired)

BASE MACHINE

DELUXE CAB MODELS

4wd

MF6712~ES	Massey Ferguson 6712	69C65447		84,997.00
MF6713~ES	Massey Ferguson 6713 **NOT FOR SALE IN NEBRASKA**	99C67441		87,587.00

ALL Tractors will be charged $325 for Assembly

LOADER PROVISION

350-LL000	Without Loader Provision			**In Base**
350-LL001	Front Loader Provision includes Frame Rails, Uprights, Subframe, Hydraulic Kit with Joystick with Valve and 3rd Function Ready Buttons, and Grille Guard	16C3548		4,608.00

LOADER OPTIONS

Note: MF941X/946X Loaders are not Compatible with 28-inch Front Tires

For Factory Loader Ready Tractors - Requires LL001

Non Self-Leveling

7296140	MF941X Loader - Euro Style	04C4583	794	5,952.00
7296240	MFFL.3723 Loader - Euro Style, Includes Soft Drive with Electric Shutoff	64C5568		7,232.00

Mechanical Self-Leveling

7296144	MF946X Loader - Euro Style	44C5445	926	7,072.00
7296236	MFFL.3819 Loader - Euro Style, Includes Soft Drive with Electric Shutoff	99C7150		9,287.00

Note: For Additional Loader Options, Refer to Implements Price List Revision

BUCKET OPTIONS - Recommended with Loader Packages Only

Euro Style

72537003ML	83-inch Heavy Duty Material Bucket - SM 210 (Recommended for MF941X-946X Loaders)	75C981		1,155.00
72537006ML	83-inch Material Bucket - GM 215 (Recommended for MFFL.3723 or .3819 Loaders)	79C1098		1,427.00

(F.O.B. PORT OF ENTRY)

Feature Code	Description	Factory Code	Approx. Weight (lb.)	List Price

TIRE BRAND SELECTION

70-Base	Trelleborg Brand			No Charge

FRONT AND REAR TIRES

NOTE: Tire Options not In Base are Subject to Extended Factory Lead Time of Approximately 120 Days

4WD - Flange Axle - Set of 2

TIRES FOR 6712 AND 6713

75-W1882	Rear: 460/85R38 (18.4R38) R1W Front: 380/85R28 (14.9R28) R1W			**In Base**
	Note: 28-inch Front Tires are not Compatible with MF941X/946X Loaders			
75-W1880	Rear: 460/85R34 (18.4R34) R1W Front: 380/85R24 (14.9R24) R1W	(24C1241)		(1,612.00)
75-W5990	Rear Shipping Wheel Front Shipping Wheel	(72C5879)		(7,636.00)

NOTE: The tires listed below can only be ordered once the shipping wheel option above is selected. The price deduct for the shipping wheels will be netted with the list price increase for the tire configurations shown below, on the tractor invoice. The tire configurations shown below will be installed at the Assembly Center and delivered to the dealer. The shipping wheels will not be delivered separately to the dealer, only the Low Profile Wheels & Tires will be. The process must work this way for internal systems reasons.

ACTWLS1	Rear: 19.5L-24 10 Ply R4 Front: 12.5/80-18 14 Ply R4	80C2802		3,640.00
ACTWLS3	Rear: 18.4-26 12 Ply R1 Front: 11.2-24 8 Ply R1	28C3283		4,264.00

MASSEY FERGUSON®

MF 6700 CAB

(F.O.B. PORT OF ENTRY)

Feature Code	Description	Factory Code	Approx. Weight (lb.)	List Price
CREEPER GEAR				
35-EN000	Without Creeper Gear			**In Base**
35-EN002	Creeper Gear (13.68:1 Reduction) **(Extended Factory Lead Time Approximately 160 Days)**	93C1161		1,509.00
EXHAUST				
40-CC024	A-Pillar Exhaust with Heat Shield			**In Base**
AUXILIARY VALVES				
50-KX032	2 Mechanically Controlled Spool Valves, (1 x DA KO FL + 1 x DA KO FL)			**In Base**
50-KX044	3 Mechanically Controlled Spool Valves, (1 x DA KO FL + 1 x DA KO FL + 1 x DA FD KO FL) **(Extended Factory Lead Time Approximately 160 Days)**	26C1030		1,338.00
CAB				
140-AI019	Standard Cab			**In Base**
140-E1040	VisioRoof with FOPS **(Extended Factory Lead Time Approximately 160 Days)**	68C449		584.00
SEAT				
125-AE026	Air Suspended Swivel Seat with Armrests			**In Base**
MISCELLANEOUS				
275-TC025	English Language Operator's Manual - 6700 Cab Tractor			**In Base**
ASSEMBLY CENTER MISCELLANEOUS OPTIONS				
ACWTPKG1	100kg Weight Adapter Package	95C257		335.00
ACWTPKG2	100kg Stackable Rear Wheel Weight Package (order quantity 1 or 2) (Requires Adapter Package ACWTPKG1 to Install)	95C257		335.00
FROPML7	French Language Operator Manual - 6700 Cab Tractor			No Charge

FIELD INSTALLED ACCESSORIES

MASSEY FERGUSON®

PARTS SUPPLIED

DEALER / FIELD INSTALLED ACCESSORIES

Consult your AGCO parts ordering system using oneAGCO Solutions-Online to determine current availability and pricing.

CATALOG NUMBER	DESCRIPTION	6712	6713	NOTES
HYDRAULICS				
4393120M13	3rd Remote Valve, Double Acting Float with Kickout and Flow Divider	X	X	Requires ACW0327140 (Platform) or ACW1235740 (Cab) Only Available from 2 to 3 Valves. Note: 3rd valve kits can only be used on tractors that were received from the factory with 2 valves installed. This kit will not work if the 2nd valve was field installed.
ACW0327140	3rd Remote Valve Control Lever for Platform	X	X	Note: 3rd valve kits can only be used on tractors that were received from the factory with 2 valves installed. This kit will not work if the 2nd valve was field installed.
ACW1235740	3rd Remote Valve Control Lever for Cab	X	X	Note: 3rd valve kits can only be used on tractors that were received from the factory with 2 valves installed. This kit will not work if the 2nd valve was field installed.
WEIGHTS / BALLAST				
4380458M1	40 KG Front Weight - Single Weight	X	X	Max 14 Weights Requires Hardware Kit ACW002695A
4349427M2	55 KG Front Weight - Single Weight	X	X	Max 14 Weights Requires Hardware Kit ACW002695A
ACW002695A	Front End Weight Hardware 40 and 55 KG	X	X	Works for Stack of 10 or 14 Weights Order Weights Separately
ACW012805A	Single Rear Wheel Weight Adapter Hub (50 KG)	X	X	Requires Hardware Kit ACW0392850 - One Kit per Adapter
ACW0392850	Single Rear Wheel Weight Adapter Hub Hardware Kit	X	X	One Kit Required per Adapter
ACW0128080	Single Rear Wheel Weight (50 KG)	X	X	Requires ACW0392870 Hardware Kit (1 per Weight) and ACW012805A Adapter Weight.Requires adapter to be installed first. Multiple weights can be stacked.
ACX2448030	Single Rear Wheel Weight Hardware Kit (50 KG) Qty 4	X	X	Each weight requires Qty 4 to install

FIELD INSTALLED ACCESSORIES

PARTS SUPPLIED

DEALER / FIELD INSTALLED ACCESSORIES

Consult your AGCO parts ordering system using oneAGCO Solutions-Online to determine current availability and pricing.

CATALOG NUMBER	DESCRIPTION	6712	6713	NOTES
MISCELLANEOUS				
ACW0026370	Front Tow Hitch with Tow Pin	X	X	Mounts to Front Weight Carrier Frame or Suit Case Weights
ACW1305370	Grille Guard	X	X	Requires Tractor with LL000 Option
ACW0709840	Block Heater (220V)	X	X	
ACW085956A	Fuel Filter Heater	X	X	Also available for MF4700 / 5700 Global Series Requires Qty 1 593386D1 Note: Prevents fuel filter gelling in extreme cold temperatures
4385513M1	Lockable Fuel Cap with Key	X	X	
ACW0141220	Lockable DEF Cap with Key	X	X	
ACW0927320	470mm Plastic Front Fender	X	X	Requires Hardware Kit ACW0929490
ACW0929370	355mm Plastic Front Fender	X	X	Requires Hardware Kit ACW0929490
ACW0929310	410mm Plastic Front Fender	X	X	Requires Hardware Kit ACW0929490
ACW0929490	Pivoting Front Fenders Hardware Kit, <1200mm (47")	X	X	
ACW0929500	Pivoting Front Fenders Hardware Kit, >1200mm (47")	X	X	

MASSEY FERGUSON®

MF6700S SERIES

MASSEY FERGUSON®

6714S / 6715S / 6716S / 6718S SERIES

MID RANGE

6700S CLASSIC EDITION

MASSEY FERGUSON®

(F.O.B. PORT OF ENTRY)

CLASSIC EDITION FEATURES

ENGINE
6714S / 6715S / 6716S / 6718S
AGCO POWER™ 4.9L (299 cu in.) 4 Cylinder, Tier 4f Compliant
- SCR Technology
- Air-to-Air Aftercooled, Common Rail Injection, Turbocharged

Electronic Engine Management (EEM) with Dual ERPM Settings
Electronic Controlled Viscous Fan Drive
Dual Element Dry Type Air Cleaner
Vertical Exhaust at Right Front Cab Post
Cooling System: Antifreeze to Minus 30F (-34C)
Fuel Tank Capacity: 54 Gal (205L)
DEF Tank Capacity: 7.92 Gal (30L)

POWERTRAIN
6714S / 6715S / 6716S / 6718S: Dyna-6 Transmission
- 24F/24R Semi-Powershift, 4 Ranges with 6 Powershifts per Range

Multi-Disc Wet Brakes
Power Differential Lock
Independent PTO: 540/1000 RPM, 540 with 6 Spline Shaft, 1000 RPM with 21 Spline Shaft, Exchangeable Shafts
Rear Fender Mounted PTO Shut-Off
Flange Axles

FRONT WHEEL ASSIST AXLE
Power Front Axle (PFA)
- 8 Bolt Pattern: 6714S & 6715S Dyna-6
- 10 Bolt Pattern: 6716S & 6718S Dyna-6

Shielded Center Drive Line with Electro-Hydraulic Control & Front Wheel Drive Differential Lock
55 Degree Steering Angle

HYDRAULICS
Closed Center Load Sensing 29 GPM (110 L/min) Pump
2900 PSI (200 Bar) Maximum Pressure
3 Mechanical Valves – Lever Controlled on Right Hand Console
Hydrostatic Power Steering

HITCH
3 Point Hitch: Category 2/3 Linkage Ball Ends
- 8,520 lbs lift capacity @ 24"
- Active Transport Control
- Lower Link Sensing
- Electronic Draft Control, Electronic Height Control, and Rate of Drop
- Variable Float Telescopic Stabilizers
- Left and Right Side External 3 Point Control

Drawbar: Category 2, Clevis and Drop Pin

ELECTRICAL SYSTEM
Twin 120 Amp Alternators
2 – 12V Batteries, 600 CCA Each (SAE)
7 Pin ASAE Rear Trailer Electrical Outlet
Electrical Isolator Switch and Jumpstart Point
Ignition with Neutral Start and Key Shutoff

LIGHTING
8 Front Hood Mounted Lights
Four Front Single Bulb Worklights
Two Rear Double Bulb Worklights
Two Field Lights on Hand Rails and Rear Fenders with Tail Lights, Flashing Warning Lights, and Turn Signals

INSTRUMENTS
Setup and Information Screen (SIS)
FieldStar 5 (Isobus and Guidance)
Tachometer: Digital and Analog
PTO Speed: Digital
Ground Speed Display: Digital
Fuel Level, DEF Level, and Coolant Temp Gauges
Warning/Information Lights

OPERATOR AREA
6 Post Cab
Transmission Control T-Handle on Right Hand Console
Adjustable Steering Column with SpeedSteer
Front Sun Visor
Air Conditioning and Heater
Air Suspended Seat - Manual Adjustment
Front and Rear Windshield Wiper/Washer
Dual Large Telescoping Outside Rear View Mirrors
Single Inside Rear View Mirror
2 Audio Speakers and Antenna
3 Pin 12V Power Outlets
12V Cigarette Lighter Style Power Outlet

WHEELS AND TIRES
Rear 460/85R38 R1W Single Wheels
Front 380/85R28 R1W Single Waffle Wheels

OTHER STANDARD FEATURES
Massey Ferguson Guide Ready (Verizon)
Massey Ferguson Connect Ready
TaskDoc
Lockable Tool Box
SMV Sign
Molded Rear Fenders
English Literature

MF6700 models can not be sold in Nebraska

(F.O.B. PORT OF ENTRY)

Order Code	Catalog Number	Description	Factory Code	Approx. Weight (lb.)	List Price

ONE *ORDER CODE* FROM EACH GROUP MUST BE SPECIFIED. (Unless In Base Option is desired)

BASE MACHINE

MF6714S~D6~ES~07	7293951	Massey 6714S Classic Tractor 105 PTO HP	M11076142		143,846.00
MF6715S~D6~ES~07	7293952	Massey 6715S Classic Tractor 115 PTO HP	M11728871		152,323.00
MF6716S~D6~ES~07	7293953	Massey 6716S Classic Tractor 125 PTO HP	M12414710		161,230.00
MF6718S~D6~ES~07	7293954	Massey 6718S Classic Tractor 140 PTO HP	M13573098		176,274.00

TRANSMISSION OPTIONS FOR DYNA-6 EDITIONS

FOR 6714S & 6715S

25-EA655	**Base**	6x4 Dyna-6 AUTODRIVE Transmission with 24F/24R gears. 25 MPH (40 KPH)			**In Base**
25-NA032	7295235	6x4 Dyna-6 AUTODRIVE Transmission with 24F/24R gears. 25 MPH (40 KPH) Includes: Suspended Power Front Axle	M563563		7,319.00
25-G1061	7295236	6X4 Dyna-6 AUTODRIVE Transmission with 24F/24R gears. 31 MPH (50 KPH) Includes: Suspended Power Front Axle Includes: High Pressure Brakes	M807345		10,485.00

FOR 6716S & 6718S

25-EA655	**Base**	6x4 Dyna-6 AUTODRIVE Transmission with 24F/24R gears. 25 MPH (40 KPH)			**In Base**
25-NA032	7295238	6x4 Dyna-6 AUTODRIVE Transmission with 24F/24R gears. 25 MPH (40 KPH) Includes: Suspended Power Front Axle	M563563		7,319.00
25-G1061	7295239	6X4 Dyna-6 AUTODRIVE Transmission with 24F/24R gears. 31 MPH (50 KPH) Includes: Suspended Power Front Axle Includes: High Pressure Brakes	M807345		10,485.00

(F.O.B. PORT OF ENTRY)

Order Code	Catalog Number	Description	Factory Code	Approx. Weight (lb.)	List Price
AUXILIARY HYDRAULIC FLOW					
370-DP110	Base	29 GPM (110 L/min) Closed Center Load Sensing			**In Base**
370-DP100	7293578	26 GPM (100 L/min) Twin Flow Open Center System	(M284823)		(3,699.00)
AUXILIARY VALVE 1 & 2					
50-KX010	Base	2 Mechanical Controlled Valves, Located on right hand console. (1st and 2nd - Flow Dividing, Kickout, Zero Leak, Float) (Requires DP110)			**In Base**
50-KX006	7292332	2 Mechanical Controlled Valves, Located on right hand console. (1st - Double Acting, Flow Dividing, Kickout, Zero Leak and 2nd - Single Acting/Double Acting, Zero Leak, Notch Float) (Requires DP100)			**No Charge**
AUXILIARY VALVE 3 & 4					
55-MU003	Base	3rd Mechanical Valve Only, Located on right hand console. (Kickout, Zero Leak, Flow Dividing, Float) (Requires DP110) (Requires KX010)			**In Base**
55-MU002	7295664	3rd Mechanical Valve Only, Located on right hand console. (Single Acting/Double Acting) (Requires DP100) (Requires KX006)			No Charge
55-MU011	7295665	3rd and 4th Mechanical Valve, Located on right hand console. (3rd - Single Acting/Double Acting and 4th - Double Acting, Kickout, Float) (Requires DP100) (Requires KX006)	M95557		1,241.00
55-MU012	7293531	3rd and 4th Mechanically Controlled Valves, with levers located in Right Hand Console Kickout, Zero Leak, Flow Dividing, Float (Requires DP110) (Requires KX010)	M94633		1,229.00
POWER BEYOND					
90-GR000	Base	Less Power Beyond			**In Base**
90-GR010	7295153	Power Beyond Couplers P/T/LS/D Requires DP110	M59598		774.00
REAR AXLE					
FOR 6714S, 6715S, 6716S & 6718S					
60-EE400	Base	Flange Axle			**In Base**
FOR 6715S, 6716S & 6718S					
60-EE402	7293024	Short Bar Rear Axle, 80 in. (2028 mm) Length, 3.23 in (82 mm) Diameter	M50281		653.00
60-EE404	7293025	Long Bar Rear Axle, 105 in (2672 mm) Length, 3.23 in (82 mm) Diameter (Requires Extremity Lights VE019)	M114961		1,493.00

(F.O.B. PORT OF ENTRY)

Order Code	Catalog Number	Description	Factory Code	Approx. Weight (lb.)	List Price
REAR 3-POINT HITCH					
95-GC009	Base	Category 2/3 Telescopic Ball End Links			**In Base**
95-GC025	7293572	Category 3 Hook End Links, Cat 3/3 & 3/2 Balls & Cones			No Charge
INSTRUMENT PANEL					
175-BA051	7295648	FieldStar 5 (Isobus and Massey Ferguson Guide) All XR options available			**In Base**
175-BA005	7295647	System Information Screen	(M628628)		(8,164.00)
175-BA003	7295658	System Information Screen with Radar (For Actual Ground Speed and Slip Control)	(M563948)		(7,324.00)
	FOR COMPLETE GUIDANCE PLEASE ORDER FIELDSTAR 5 FROM PARTS				
MASSEY FERGUSON GUIDE					
300-XR341*	7295653**	Massey Ferguson Guide Ready Package (Verizon) Verizon Cellular Network when using NTRIP and Task Doc Pro			**In Base**
300-XR000	7295649	Less Massey Ferguson Guide (Requires Less SpeedSteer)	(M346500)		(4,500.00)
300-XR342*	7295654	Massey Ferguson Guide Standard (Verizon) with Novatel Smart7 Receiver Pass-to-Pass Accuracy of +/- 20 cm (+/- 8 inch) For correction signal WAAS (no subscription needed)	M211750		2,750.00
300-XR346*	7295655	Massey Ferguson Guide Standard (Verizon) Trimble® AG-382 Receiver Pass-to-Pass Accuracy of +/- 20 cm (+/- 8 inch) For correction signal WAAS (no subscription needed)	M273350		3,550.00
300-XR301*	7295650**	Massey Ferguson Guide Ready Package (GSM) Suggested for Canada and US where Verizon is not preferred when using NTRIP and Task Doc Pro			No Charge
300-XR302*	7295651	Massey Ferguson Guide Standard (GSM) with Novatel Smart7 Receiver Pass-to-Pass Accuracy of +/- 20 cm (+/- 8 inch) For correction signal WAAS (no subscription needed)	M211750		2,750.00
300-XR306*	7295652	Massey Ferguson Guide Standard (GSM) Trimble® AG-382 Receiver Pass-to-Pass Accuracy of +/- 20 cm (+/- 8 inch) For correction signal WAAS (no subscription needed)	M273350		3,550.00
***REQUIRES SPEEDSTEER AD004**					
****TO COMPLETE MF GUIDE, ORDER FIELDSTAR 5 AND MF GUIDE RECEIVER FROM PARTS**					
SPEEDSTEER					
185-AD004	Base	SpeedSteer Option Mandatory with Massey Ferguson Guide Ready Not Compatible with Less Massey Ferguson Guide- XR000			**In Base**
185-AD002	7293558	Less SpeedSteer	(M202510)		(2,630.00)
TELEMETRY					
160-BS002	Base	Massey Ferguson Connect Ready			**In Base**
160-BS119*	7295662	Massey Ferguson Connect Basic Package (Verizon) Verizon Cellular Network when using Massey Ferguson Connect	M136367		1,771.00
160-BS019*	7295660	Massey Ferguson Connect Basic Package (GSM) Suggested for Canada and US where Verizon is not preferred when using Massey Ferguson Connect	M136367		1,771.00
*** 5 YEAR SUBSCRIPTION, MUST BE ACTIVATED WITHIN 12 MONTHS OF WARRANTY REGISTRATION**					

(F.O.B. PORT OF ENTRY)

Order Code	Catalog Number	Description	Factory Code	Approx. Weight (lb.)	List Price
PTO					
100-LC001	Base	540 RPM 6 Spline and1000 RPM 21 Spline . . . . . Exchangeable Shaft with No Economy			**In Base**
100-LC002	7293068	Standard and Economy PTO Drive -2000 & 1550. . . . Engine RPM. Exchangeable Shaft PTO- 540 RPM 6 Spline + 1000 RPM 21 Spline	M76461		993.00
FRONT HITCH					
230-FA000	Base	Less Front Hitch			**In Base**
230-F1132*	7293594	2800 kg (6172 lbs) Front Linkage with . . . . . 1 Set of Hydraulic Couplers	M526064		6,832.00

***REQUIRES: SUSPENDED FRONT AXLE**

LOADER PROVISION					
350-LL000	Base	Less Loader Provisions.			**In Base**
350-LL001*	7293445	Front Loader Provision- Multifunction Mechanical , . . . Loader Control, Including Hydraulics and Subframe	M517902		6,726.00

***PLEASE SEE LOADER SECTION FOR LIVE 3RD FUNCTION FIELD INSTALL KIT AS WELL AS MECHANICAL MULTIFUNCTION JOYSTICK FIELD INSTALL KIT.**

CAB					
365-AF011	7294227	Radio, AM/FM, CD Player and MP3 Compatible	M42350		550.00
125-AE027	7293430	Air Suspended Seat - Automatic Adjustment	M28721		373.00
115-AM084	7293559	OptiRide Passive Mechanical Cab Suspension	M141988		1,844.00
145-AL032	7295330	Telescopic Wide Angle Mirrors	M28413		369.00
140-AI020	7293077	Standard Cab Roof with Roof Hatch	M21868		284.00
140-E1022	7293078	Visio Roof, Includes 2 Front Double Bulb and . . . . . 2 Rear Double Bulb Worklights Not Compatible with: Massey Ferguson Guide - XR301	M127050		1,650.00
140-A0140	7293935	Visio Roof, Includes 2 LED Front Double Bulb and . . . 2 LED Rear Double Bulb Worklights Not Compatible with: VG078/VG113 Worklamp Options Massey Ferguson Guide - XR301	M196658		2,554.00

(F.O.B. PORT OF ENTRY)

Order Code	Catalog Number	Description	Factory Code	Approx. Weight (lb.)	List Price
FRONT WEIGHTS					
285-YA112	7293487	121 lbs. (55 kg.) Front Weights, Set of 12 . . . . . with Hardware - total Weight 1,455 lbs. (660 kg.)	M189343		2,459.00
REAR WHEEL WEIGHTS					
325-RD040	7294192*	551 lbs. (250 kg.) Weights, Set of 2 . . . . . Mounts Externally to Wheel	M146377	1102	1,901.00
		***ONLY THE WELDED FIX RIMS OR RIMS ON ADJUSTABLE AXLE CAN HAVE FACTORY INSTALLED WEIGHTS**			
BELLY AND HITCH WEIGHTS					
245-YD001	7293374	1 Front Belly Weight - 584 lbs. (265 kg.) . . . . . For use **WITHOUT** Front 3-Point Hitch	M122969	584	1,597.00
345-YB003	7294270	1873 lbs. (850 kg) Monoblock Weight . . . . . Not Compatible with Front Weights	M281050	1984	3,650.00
ELECTRICAL					
215-CB000	Base	Less Engine Block Heater			In Base
215-CB002	7295498	Engine Block Heater - 110 Volt	M17094		222.00
ALTERNATOR					
220-CE019	Base	Twin 120 AMP Alternators.			**In Base**
220-CE020	7293561	175 AMP Alternator.	(M31647)		(411.00)
LIGHTING					
195	Base	4 Single Bulb Front Worklights, 2 Double Bulb Rear . . Worklights, Worklights on Handrails and Rear Fenders			**In Base**
195-A0149	7294329	4 LED Front Worklights, 2 LED Rear Worklights . . . . LED Worklights on Front Hood, Handrails and Rear Fenders	M215138		2,794.00
360-VE019	7293476	Extremity Lighting . . . . . (Required with Long Bar Axle)	M62370		810.00
205-VF013	7293103	Dual Roof-Mounted Rotating Beacons, Left and Right . (Includes SAE SMV sign)	M41811	1102	543.00

(F.O.B. PORT OF ENTRY)

Order Code	Catalog Number	Description	Factory Code	Approx. Weight (lb.)	List Price
PIVOTING FRONT FENDERS					
155-WE000	Base	Less Pivoting Front Fenders			**In Base**
155-WE110	7294204	Pivoting Front Fenders - Standard Width	M134750		1,750.00
155-WE111	7294205	Pivoting Front Fenders - Wide Width	M158928		2,064.00

Width depends on tire selection; see Chart Below

Fender Size		
Standard	**Wide**	**Tire Sizes**
12.6" (320 mm)	13.9" (355 mm)	320/85R34 (12.4R34)
13.9" (355 mm)	14.9" (380 mm)	340/85R24 (13.6R24) 340/85R28 (13.6R28)
14.9" (380 mm)	16.1" (410 mm)	380/85R28 (14.9R28) 380/85R30 (14.9R30) 400/80R24 400/80R28
16.1" (410 mm)	18.5" (470 mm)	420/85R28 (16.9R28) 440/65R28
18.5" (470 mm)	20.4" (520 mm)	440/80R28 480/65R28
20.4" (520 mm)	24.4" (620 mm)	540/65R28

REAR FENDERS					
255-WD012	Base	Rear Fenders without Extensions, 78.74"(2.00 M)			**In Base**
255-WD017	7293107	Wide Fender -90.55" (2.3 M) with Rear Extension	M106029		1,377.00
255-WD020	7293109	Extra Wide Fender -100.4" (2.55 M) with Rear Extension	M120813		1,569.00

(F.O.B. PORT OF ENTRY)

Order Code	Catalog Number	Description	Factory Code	Approx. Weight (lb.)	List Price
MISCELLANEOUS					
35-EN002	7293402	14:1 Super Creeper Reduction Gear	M239855		3,115.00
250-GS001	7293100	Hydraulic Trailer Brakes	M67452		876.00
250-GS067	7293552	Pneumatic & Hydraulic Trailer Brakes	M619465		8,045.00
225-LQ001	7293553	Water Separator (Fuel Filter)	M37345		485.00
275-TC005	7294210	French Language OIB			No Charge
275-TC011	7294211	Spanish Language OIB			No Charge
DEALER INSTALLED OPTIONS					
FRONT WEIGHTS					
	5020186M	8 x 55 KG (121 lbs.) Front Weights	M123739	968	1,607.00
	5020187M	10 x 55 KG (121 lbs.) Front Weights	M153230	1210	1,990.00
	5020188M	12 x 55 KG (121 lbs.) Front Weights	M189343	1452	2,459.00
	5020189M	14 x 55 KG (121 lbs.) Front Weights	M220913	1694	2,869.00

(F.O.B. PORT OF ENTRY)

TIRES for 6714S & 6715S

TIRE BRAND SELECTION

Order Code	Catalog Number	Description	Factory Code	Approx. Weight (lb.)	List Price
70-Blank	7294212	Factory Brand Choice			No Charge
70-T0001	7294195	Michelin Brand Required	M150150		1,950.00
70-T0007	7294197	Firestone Brand Required	M94633		1,229.00
70-T0010	7294198	Trelleborg Brand Required	M94633		1,229.00
70-T0014	7294250	Nokian Brand Required	M92862		1,206.00

FRONT AND REAR TIRES

FLANGE AXLE*

Rear: Single Pressed Steel Manual Adjust - Set of 2
Front: Waffle Wheel

75-Base	7292864 7294786	Rear: 460/85R38 R1W (18.4R38) (MI, FI, TR) Front: 380/85R28 R1W (14.9R28) (MI, FI, TR)			**In Base**
75-W1309	7292865 7293763	Rear: 520/85R38 R1W (MI, FI, TR) Front: 420/85R28 R1W (MI, FI, TR)	M114653		1,489.00

Rear: Single Welded Pressed Steel - Set of 2
Front: Fixed Welded Steel Rim

75-W1478	7292873 7293769	Rear: 540/80R38 (Nokian Industrial) Front: 440/80R28 (Nokian Industrial)	M851466		11,058.00
75-W1286	7292858 7293757	Rear: 540/65R38 R1W (MI, FI, TR) Front: 440/65R28 R1W (MI, FI, TR)	M57211		743.00
75-W1511	7292872 7293768	Rear: 480/80R38 Industrial (Nokian Industrial) Front: 400/80R28 Industrial (Nokian Industrial)	M668822		8,686.00
75-W1257	7292859 7294785	Rear: 600/65R38 R1W (MI, FI, TR) Front: 480/65R28 R1W (MI, FI, TR)	M114576		1,488.00
75-W1258	7292860 7293759	Rear: 650/65R38 R1W (MI, FI, TR) Front: 540/65R28 R1W (MI, FI, TR)	M357280		4,640.00

FOR 6715S

BAR AXLES- SHORT AND LONG

Rear: Single Welded Pressed Steel - Set of 2
Front: Fixed Welded Steel Rim

75-W1667	7294903B5 7293767	Rear: 480/80R34 Industrial (Nokian Industrial) Front: 400/80R24 Industrial (Nokian Industrial)	M524909		6,817.00
75-W1670	7294899B5 7293757	Rear: 540/65R38 R1W (MI, FI, TR) Front: 440/65R28 R1W (MI, FI, TR)	M62293		809.00
75-W1572	7294894B5 7294785	Rear: 600/65R38 R1W (MI, FI, TR) Front: 480/65R28 R1W (MI, FI, TR)	M109956		1,428.00
75-W1673	7294905B5 7293769	Rear: 540/80R38 (Nokian Industrial) Front: 440/80R28 (Nokian Industrial)	M852236		11,068.00
75-W1262	7294895B5 7293759	Rear: 650/65R38 R1W (MI, FI, TR) Front: 540/65R28 R1W (MI, FI, TR)	M360206		4,678.00
75-W1672	7294904B5 7293768	Rear: 480/80R38 Industrial (Nokian Industrial) Front: 400/80R28 Industrial (Nokian Industrial)	M641410		8,330.00

(F.O.B. PORT OF ENTRY)

TIRES for 6715S Dyna-6

FRONT AND REAR TIRES - CONTINUED

Order Code	Catalog Number	Description	Factory Code	Approx. Weight (lb.)	List Price
		BAR AXLES- SHORT AND LONG			
		Rear: Single Semi Dished Cast Centers- Set of 2			
		Front: Waffle Wheel			
75-W1300	7294897B5 7294786	Rear: 460/85R38 R1W (18.4R38) (MI, FI, TR) Front: 380/85R28 R1W (14.9R28) (MI, FI, TR)	M118426		1,538.00
75-W1318	7294883B5 7293764	Rear: 380/90R46 R1W (MI) Front: 380/85R30 R1W (MI)	M236159		3,067.00
75-W1409	7294884B5 7293764	Rear: 420/80R46 R1W (MI) Front: 380/85R30 R1W (MI)	M293678		3,814.00
75-W1388	7294884B5 7293763	Rear: 420/80R46 R1W (MI) Front: 420/85R28 R1W (MI)	M345961		4,493.00
75-W1377	7294882B5 7293764	Rear: 480/80R42 R1W (MI, TR) Front: 380/85R30 R1W (MI, TR)	M235851		3,063.00
75-W1384	7294882B5 7293763	Rear: 480/80R42 R1W (MI, TR) Front: 420/85R28 R1W (MI, TR)	M288134		3,742.00
75-W1533	7294893B5 7293763	Rear: 520/85R38 R1W (MI, FI, TR) Front: 420/85R28 R1W (MI, FI, TR)	M343959		4,467.00
		BAR AXLES- LONG			
		Rear: Dual Cast Inner / Steel Outer - Set of 4			
		Front: Waffle Wheel			
75-W1374	7294898B5 7294786	Duals: 460/85R38 R1W (18.4R38) (MI, TR, FI) Front: 380/85R28 R1W (14.9R28) (MI, TR, FI)	M710094		9,222.00
75-W1379	7294887B5 7293764	Duals: 380/90R46 R1W (MI) Front: 380/85R30 R1W (MI)	M850465		11,045.00
75-W1410	7294888B5 7293764	Duals: 420/80R46 R1W (MI) Front: 380/85R30 R1W (MI)	M929852		12,076.00
75-W1471	7294888B5 7293763	Duals: 420/80R46 R1W (MI) Front: 420/85R28 R1W (MI)	M982135		12,755.00
75-W1380	7294886B5 7293764	Duals: 480/80R42 R1W (MI, TR) Front: 380/85R30 R1W (MI, TR)	M790328		10,264.00
75-W1386	7294886B5 7293763	Duals: 480/80R42 R1W (MI, TR) Front: 420/85R28 R1W (MI, TR)	M842611		10,943.00
75-W1658	7294896B5 7293763	Duals: 520/85R38 R1W (MI, TR, FI) Front: 420/85R28 R1W (MI, TR, FI)	M854161		11,093.00
		BAR AXLES- LONG			
		Rear: Dual Cast Inner / Cast Outer - Set of 4			
		Front: Waffle Wheel			
75-W1408	7294925B5 7293764	Duals: 380/90R46 R1W (MI) Front: 380/85R30 R1W (MI)	M858935		11,155.00
75-W1412	7294926B5 7293764	Duals: 420/80R46 R1W (MI) Front: 380/85R30 R1W (MI)	M938322		12,186.00
75-W1406	7294926B5 7293763	Duals: 420/80R46 R1W (MI) Front: 420/85R28 R1W (MI)	M990605		12,865.00
75-W1407	7294927B5 7293764	Duals: 480/80R42 R1W (MI, TR) Front: 380/85R30 R1W (MI, TR)	M798798		10,374.00
75-W1405	7294927B5 7293763	Duals: 480/80R42 R1W (MI, TR) Front: 420/85R28 R1W (MI, TR)	M851081		11,053.00

MASSEY FERGUSON®

(F.O.B. PORT OF ENTRY)

TIRES 6716S & 6718S

FRONT AND REAR TIRES

Order Code	Catalog Number	Description	Factory Code	Approx. Weight (lb.)	List Price
		FLANGE AXLE*			
		Rear: Single Pressed Steel Manual Adjust - Set of 2			
		Front: Waffle Wheel			
75-Base	7292864	Rear: 460/85R38 R1W (18.4R38) (MI, FI, TR)			**In Base**
	7293762B2	Front: 380/85R28 R1W (14.9R28) (MI, FI, TR)			
75-W1309	7292865	Rear: 520/85R38 R1W (MI, FI, TR)	M114653		1,489.00
	7294762B2	Front: 420/85R28 R1W (MI, FI, TR)			
		Rear: Single Welded Pressed Steel - Set of 2			
		Front: Fixed Welded Steel Rim			
75-W1478	7292873	Rear: 540/80R38 (Nokian Industrial)	M851466		11,058.00
	7294791B2	Front: 440/80R28 (Nokian Industrial)			
75-W1286	7292858	Rear: 540/65R38 R1W (MI, FI, TR)	M57211		743.00
	7294784B2	Front: 440/65R28 R1W (MI, FI, TR)			
75-W1257	7292859	Rear: 600/65R38 R1W (MI, FI, TR)	M114576		1,488.00
	7293758B2	Front: 480/65R28 R1W (MI, FI, TR)			
75-W1258	7292860	Rear: 650/65R38 R1W (MI, FI, TR)	M357280		4,640.00
	7294783B2	Front: 540/65R28 R1W (MI, FI, TR)			
		BAR AXLES- SHORT AND LONG			
		Rear: Single Welded Pressed Steel - Set of 2			
		Front: Fixed Welded Steel Rim			
75-W1670	7294899B5	Rear: 540/65R38 R1W (MI, FI, TR)	M62293		809.00
	7294784B2	Front: 440/65R28 R1W (MI, FI, TR)			
75-W1572	7294894B5	Rear: 600/65R38 R1W (MI, FI, TR)	M109956		1,428.00
	7293758B2	Front: 480/65R28 R1W (MI, FI, TR)			
75-W1673	7294905B5	Rear: 540/80R38 (Nokian Industrial)	M852236		11,068.00
	7294791B2	Front: 440/80R28 (Nokian Industrial)			
75-W1262	7294895B5	Rear: 650/65R38 R1W (MI, FI, TR)	M360206		4,678.00
	7294783B2	Front: 540/65R28 R1W (MI, FI, TR)			

(F.O.B. PORT OF ENTRY)

TIRES 6716S & 6718S

FRONT AND REAR TIRES - CONTINUED

BAR AXLES- SHORT AND LONG
Rear: Single Semi Dished Cast Centers- Set of 2
Front: Waffle Wheel

Order Code	Catalog Number	Description	Factory Code	Approx. Weight (lb.)	List Price
75-W1300	7294897B5 7293762B2	Rear: 460/85R38 R1W (18.4R38) (MI, FI, TR) Front: 380/85R28 R1W (14.9R28) (MI, FI, TR)	M118426		1,538.00
75-W1394	7294885B5 7294769B2	Rear: 320/90R50 R1W (MI) Front: 320/85R34 R1W (MI)	M333410		4,330.00
75-W1548	7294883B5 7294769B2	Rear: 380/90R46 R1W (MI) Front: 320/85R34 R1W (MI)	M297374		3,862.00
75-W1318	7294883B5 7294765B2	Rear: 380/90R46 R1W (MI) Front: 380/85R30 R1W (MI)	M236159		3,067.00
75-W1624	7294884B5 7294769B2	Rear: 420/80R46 R1W (MI) Front: 320/85R34 R1W (MI)	M354893		4,609.00
75-W1409	7294884B5 7294765B2	Rear: 420/80R46 R1W (MI) Front: 380/85R30 R1W (MI)	M293678		3,814.00
75-W1388	7294884B5 7294762B2	Rear: 420/80R46 R1W (MI) Front: 420/85R28 R1W (MI)	M345961		4,493.00
75-W1620	7294882B5 7294769B2	Rear: 480/80R42 R1W (MI) Front: 320/85R34 R1W (MI)	M297066		3,858.00
75-W1377	7294882B5 7294765B2	Rear: 480/80R42 R1W (MI, TR) Front: 380/85R30 R1W (MI, TR)	M235851		3,063.00
75-W1384	7294882B5 7294762B2	Rear: 480/80R42 R1W (MI, TR) Front: 420/85R28 R1W (MI, TR)	M288134		3,742.00
75-W1533	7294893B5 7294762B2	Rear: 520/85R38 R1W (MI, FI, TR) Front: 420/85R28 R1W (MI, FI, TR)	M343959		4,467.00

MASSEY FERGUSON®

(F.O.B. PORT OF ENTRY)

TIRES 6716S & 6718S

BAR AXLES- LONG
Rear: Dual Cast Inner / Steel Outer - Set of 4
Front: Waffle Wheel

Order Code	Catalog Number	Description	Factory Code	Approx. Weight (lb.)	List Price
75-W1374	7294898B5 7293762B2	Duals: 460/85R38 R1W (18.4R38) (MI, TR, FI) Front: 380/85R28 R1W (14.9R28) (MI, TR, FI)	M710094		9,222.00
75-W1395	7294889B5 7294769B2	Duals: 320/90R50 R1W (MI) Front: 320/85R34 R1W (MI)	M333410		4,330.00
75-W1549	7294887B5 7294769B2	Duals: 380/90R46 R1W (MI) Front: 320/85R34 R1W (MI)	M911680		11,840.00
75-W1379	7294887B5 7294765B2	Duals: 380/90R46 R1W (MI) Front: 380/85R30 R1W (MI)	M850465		11,045.00
75-W1625	7294888B5 7294769B2	Duals: 420/80R46 R1W (MI) Front: 320/85R34 R1W (MI)	M991067		12,871.00
75-W1410	7294888B5 7294765B2	Duals: 420/80R46 R1W (MI) Front: 380/85R30 R1W (MI)	M929852		12,076.00
75-W1471	7294888B5 7294762B2	Duals: 420/80R46 R1W (MI) Front: 420/85R28 R1W (MI)	M982135		12,755.00
75-W1621	7294886B5 7294769B2	Duals: 480/80R42 R1W (MI) Front: 320/85R34 R1W (MI)	M851543		11,059.00
75-W1380	7294886B5 7294765B2	Duals: 480/80R42 R1W (MI, TR) Front: 380/85R30 R1W (MI, TR)	M790328		10,264.00
75-W1386	7294886B5 7294762B2	Duals: 480/80R42 R1W (MI, TR) Front: 420/85R28 R1W (MI, TR)	M842611		10,943.00
75-W1658	7294896B5 7294762B2	Duals: 520/85R38 R1W (MI, TR, FI) Front: 420/85R28 R1W (MI, TR, FI)	M854161		11,093.00

BAR AXLES- LONG
Rear: Dual Cast Inner / Cast Outer - Set of 4
Front: Waffle Wheel

Order Code	Catalog Number	Description	Factory Code	Approx. Weight (lb.)	List Price
75-W1408	7294925B5 7294765B2	Duals: 380/90R46 R1W (MI) Front: 380/85R30 R1W (MI)	M858935		11,155.00
75-W1412	7294926B5 7294765B2	Duals: 420/80R46 R1W (MI) Front: 380/85R30 R1W (MI)	M938322		12,186.00
75-W1406	7294926B5 7294762B2	Duals: 420/80R46 R1W (MI) Front: 420/85R28 R1W (MI)	M990605		12,865.00
75-W1407	7294927B5 7294765B2	Duals: 480/80R42 R1W (MI, TR) Front: 380/85R30 R1W (MI, TR)	M798798		10,374.00
75-W1405	7294927B5 7294762B2	Duals: 480/80R42 R1W (MI, TR) Front: 420/85R28 R1W (MI, TR)	M851081		11,053.00

6700S DELUXE EDITION

(F.O.B. PORT OF ENTRY)

DELUXE EDITION FEATURES

ENGINE

6714S/6715S/6716S/6718S

AGCO POWER™ 4.9L (299 cu in.) 4 Cylinder, Tier 4f Compliant

- SCR Technology
- Air-to-Air Aftercooled, Common Rail Injection, Turbocharged

Electronic Engine Management (EEM) with Dual ERPM Settings
Electronic Controlled Viscous Fan Drive
Dual Element Dry Type Air Cleaner
Vertical Exhaust at Right Front Cab Post
Cooling System: Antifreeze to Minus 30F (-34°C)
Fuel Tank Capacity: 54 Gal (205L)
DEF Tank Capacity: 7.92 Gal (30L)

POWERTRAIN

6714S/6715S/6716S/6718S: DYNA-VT

- Continuously Variable Transmission, 60 ft/h to 25 MPH (18.2 Meters/h to 40 KPH)
- Dynamic Tractor Management (DTM) with Two Programmable Cruise Speeds
- Short Bar Rear Axle, 90 In. (2277mm) Long, 3.74 in. (95mm) Diameter

6715S/6716S/6718S: DYNA-6 TRANSMISSION

- 24F/24R Semi-Powershift, 4 Ranges with 6 Powershifts per Range, 40 KPH
- Dynamic Tractor Management (DTM) with Two Programmable Cruise Speeds
- Short Bar Rear Axle, 80 In. (2028mm) Long, 3.23 In (82mm) Diameter

Multi-Disc Wet Brakes
Power Differential Lock
Independent PTO:
DYNA-VT:
540/540E/1000/1000E RPM Flanged Shaft, 540 with 6 Spline and 1000 with 21 Spline
DYNA-6: 540/540E/1000/1000E Exchangeable Shaft, 540 with 6 Spline and 1000 with 21 Spline with Electric Control
Rear Fender Mounted PTO Shut-Off

FRONT WHEEL ASSIST AXLE

Power Front Axle (PFA)

- 8 Bolt Pattern: 6715S Dyna-6 and 6714S Dyna-VT
- 10 Bolt Pattern: 6716S Dyna-6 and 6715S/6716S/6718S Dyna-VT

Non-Suspended Front Axle
Shielded Center Drive Line with Electro-Hydraulic Control & Front Wheel Drive Differential Lock
55 Degree Steering Angle

HYDRAULICS

Closed Center Load Sensing 29 gpm (110 L/Min) Pump
2900 PSI (200 Bar) Maximum Pressure
3rd Valve only, Mechanically Controlled with lever located in Right Hand Console
Kickout, Zero Leak, Flow Dividing, Float

HITCH

3-Point Hitch: Category 2/3 Linkage Ball Ends

- 8,520 lbs lift capacity @ 24" for Dyna-6
- 11,400 lbs lift capacity @ 24" for Dyna-VT
- Lower Link Sensing
- Electronic Draft Control, Electronic Height Control & Rate of Drop
- Variable Float Telescopic Stabilizers
- Left & Right Side External 3 Point Control with one Spool Valve Control

Drawbar: Category 2, Clevis and Drop Pin

ELECTRICAL SYSTEM

Twin 120 AMP Alternators
2 – 12V Batteries, 600 CCA Each (SAE)
7 Pin ASAE Rear Trailer Electrical Outlet
Electrical Isolator Switch and Jumpstart Point
Ignition with Neutral Start and Key Shutoff

LIGHTING

8 Front Hood Mounted Lights
Four Front Single Bulb Worklights
Two Rear Double Bulb Worklights
Two Field Lights on Hand Rails and Rear Fenders with Tail Lights, Flashing Warning Lights, and Turn Signals

INSTRUMENTS

Setup and Information Screen (SIS)
C1000 (Tractor Functions and Video) + FieldStar 5 (Isobus & Massey Ferguson Guide)
Tachometer: Digital and Analog
PTO Speed: Digital
Ground Speed Display: Digital
Fuel Level, DEF Level, and Coolant Temp Gauges
Warning/Information Lights

OPERATOR AREA

6 Post Cab
Transmission Control T-Handle on Armrest
Adjustable Steering Column with SpeedSteer
Front Sun Visor
Air Conditioning and Heater
Air Suspended Seat
Front and Rear Windshield Wiper/Washer
Dual Large Telescoping Outside Rear View Mirrors
Single Inside Rear View Mirror
2 Audio Speakers and Antenna
Two - 3 Pin 12V Power Outlet
12V Cigarette Lighter Style Power Outlet
ISO 11783 9-Pin in Cab Connector
ISO 11786 7-Pin in Cab Connector

WHEELS AND TIRES

Rear 460/85R38 R1W Single Wheels
Front 380/85R28 R1W Single Waffle Wheels

OTHER STANDARD FEATURES

Massey Ferguson Guide Ready (Verizon)
Massey Ferguson Connect Ready
TaskDoc
Lockable Tool Box
SMV Sign
Molded Rear Fenders
English Literature

MF6700 models can not be sold in Nebraska

(F.O.B. PORT OF ENTRY)

Order Code	Catalog Number	Description	Factory Code	Approx. Weight (lb.)	List Price

ONE *ORDER CODE* FROM EACH GROUP MUST BE SPECIFIED. (Unless In Base Option is desired)

BASE MACHINE

DYNA-6 EDITIONS

MF6715S~D6~EF~07	7293955	Massey 6715S Deluxe Tractor 115 PTO HP	M12087845		156,985.00
MF6716S~D6~EF~07	7293956	Massey 6716S Deluxe Tractor 125 PTO HP	M12834437		166,681.00
MF6718S~D6~EF~07	7293957	Massey 6718S Deluxe Tractor 140 PTO HP	M13898423		180,499.00

DYNA-VT EDITIONS

MF6714S~DV~EF~07	7293958	Massey 6714S Deluxe Tractor 105 PTO HP	M12366200		160,600.00
MF6715S~DV~EF~07	7293959	Massey 6715S Deluxe Tractor 115 PTO HP	M12811568		166,384.00
MF6716S~DV~EF~07	7293960	Massey 6716S Deluxe Tractor 125 PTO HP	M13558237		176,081.00
MF6718S~DV~EF~07	7293961	Massey 6718S Deluxe Tractor 140 PTO HP	M14622223		189,899.00

MARKETING PACKAGES

320-MLP8012	7295472	Deluxe Comfort Package, Includes:	M244783		3,179.00
		Radio, AM/FM, CD Player and MP3 Compatible (AF011)			
		Telescopic Wide Angle Mirrors with Electric De-Icing & Adjustment (AL033)			
		Passive Mechanical Suspension (AM084)			
		Automatic Climate Control (AQ004)			
320-MLP8013	7295474	Premium Comfort Package, Includes:	M562408		7,304.00
		Superluxe Grammar Seat (AE042)			
		Radio, AM/FM, CD Player and MP3 Compatible (AF011)			
		Telescopic Wide Angle Mirrors with Electric De-Icing & Adjustment (AL033)			
		OptiRide Active Mechanical Cab Suspension (AM117)			
		Automatic Climate Control (AQ004)			
		4 LED Front Worklights, 2 LED Rear Worklights (A0149)			
		LED Worklights on Front Hood, Handrails and Rear Fenders			

Order Code	Catalog Number	Description	Factory Code	Approx. Weight (lb.)	List Price
TRANSMISSION OPTIONS FOR DYNA-6 EDITIONS					
FOR 6715S					
25-EA655	Base	6x4 Dyna-6 AUTODRIVE Transmission with 24F/24R gears. 25 MPH (40 KPH)			**In Base**
25-NA032	7295235	6x4 Dyna-6 AUTODRIVE Transmission with 24F/24R gears. 25 MPH (40 KPH) Includes: Suspended Power Front Axle	M563563		7,319.00
25-G1061	7295236	6X4 Dyna-6 AUTODRIVE Transmission with 24F/24R gears. 31 MPH (50 KPH) Includes: Suspended Power Front Axle Includes: High Pressure Brakes	M807345		10,485.00
FOR 6716S & 6718S					
25-EA655	Base	6x4 Dyna-6 AUTODRIVE Transmission with 24F/24R gears. 25 MPH (40 KPH)			**In Base**
25-NA032	7295238	6x4 Dyna-6 AUTODRIVE Transmission with 24F/24R gears. 25 MPH (40 KPH) Includes: Suspended Power Front Axle	M563563		7,319.00
25-G1061	7295239	6X4 Dyna-6 AUTODRIVE Transmission with 24F/24R gears. 31 MPH (50 KPH) Includes: Suspended Power Front Axle Includes: High Pressure Brakes	M807345		10,485.00
TRANSMISSION OPTIONS FOR DYNA-VT EDITIONS					
FOR 6714S					
25-EA621	Base	Dyna-VT Transmission - 25 MPH (40 KPH)			**In Base**
25-A7024	7295241	Dyna-VT Transmission - 31 MPH (50 KPH) Includes: Suspended Power Front Axle	M628859		8,167.00
FOR 6715S, 6716S & 6718S					
25-EA621	Base	Dyna-VT Transmission - 25 MPH (40 KPH)			**In Base**
25-A7024	7295242	Dyna-VT Transmission - 31 MPH (50 KPH) Includes: Suspended Power Front Axle	M628859		8,167.00

MASSEY FERGUSON®

(F.O.B. PORT OF ENTRY)

Order Code	Catalog Number	Description	Factory Code	Approx. Weight (lb.)	List Price
ARMREST CONTROL					
30-EC021	Base	"T" Lever Control on Armrest			**In Base**
30-EC022	7295276	Power Control Shuttle - MultiPad Lever on Armrest	M93016		1,208.00
AUXILIARY HYDRAULIC FLOW					
370-DP110	Base	29 gpm (110 L/min) Closed Center Load Sensing (CCLS)			**In Base**
370-DP190	7293697	50 gpm (190 L/min) Closed Center Load Sensing (CCLS) System (Only Available for Dyna-VT Models)	M197659		2,567.00
AUXILIARY VALVE 1 & 2					
50-KX011	Base	Valves 1 and 2 Electric, Fingertip Controlled Spool Valves Fingertips Located in Armrest			**In Base**
50-KX012	7293530	Valves 1 & 2 Electric, with Multi-Function Joystick on the Armrest (Required when choosing Factory Installed Loader Provisions (LL004 & LL005))	M107261		1,393.00
AUXILIARY VALVE 3 & 4 & 5					
55-MU003	Base	3rd Mechanical Valve Only, Located on right hand console Kickout, Zero Leak, Flow Dividing, Float			**In Base**
55-MU012	7293531	3rd and 4th Mechanically Controlled Valves, with levers located in Right Hand Console Kickout, Zero Leak, Flow Dividing, Float	M94633		1,229.00
55-MU031	7295487	3rd and 4th Electric, Fingertip Controlled Valves with Fingertips located on Right Hand Console	M109802		1,426.00
55-MU041	7295488	3rd, 4th & 5th Fingertip Controlled Electric Spool Valve. (Fingertips located on Right Hand Console) **DYNA-VT MODELS**	M147994		1,922.00
POWER BEYOND					
90-GR000	Base	Less Power Beyond			**In Base**
90-GR010	7295153	Power Beyond Couplers P/T/LS/D	M59598		774.00
REAR AXLE					
DYNA-6					
60-EE402	Base	Short Bar Rear Axle, 80 in. (2028mm) Length, 3.23 in (82mm) Diameter			**In Base**
60-EE404	7293026	Long Bar Rear Axle, 105 in (2672mm) Length, 3.23 in (82mm) Diameter (Requires Extremity Lights VE019)	M76384		992.00
DYNA-VT					
60-EE402	Base	Short Bar Rear Axle, 90 in. (2277mm) Long, 3.74 in. (95mm) Diameter			**In Base**
60-EE404	7293131	Long Bar Rear Axle, 113 in. (2869mm) Long, 3.74 in. (95mm) Diameter (Requires Extremity Lights VE019)	M76384		992.00
REAR 3-POINT HITCH					
95-GC009	Base	Category 2/3 Telescopic Ball End Links			**In Base**
95-GC025	7293572	Category 3 Hook End Links, Cat 3/3 & 3/2 Balls & Cones			No Charge

MASSEY FERGUSON®

6700S DELUXE EDITION

(F.O.B. PORT OF ENTRY)

Order Code	Catalog Number	Description	Factory Code	Approx. Weight (lb.)	List Price
INSTRUMENT PANEL					
175-BA053	7295490	C1000 (Tractor Functions and Video) + FieldStar 5 (Isobus & Massey Ferguson Guide) All XR options available			**In Base**
175-BA051	7295450	FieldStar 5 (Isobus and Massey Ferguson Guide) All XR options available	(M06160)		(80.00)
175-BA024	7295351	C1000 (Tractor Functions and Video)	(M160160)		(2,080.00)
175-BA003	7295449	System Information Screen with Radar (For Actual Ground Speed and Slip Control)	(M570108)		(7,404.00)
175-BA005	7295448	System Information Screen	(M634788)		(8,244.00)
MASSEY FERGUSON GUIDE					
BA053 IS NEEDED FOR MF GUIDE					
300-XR341*	7295653**	Massey Ferguson Guide Ready Package (Verizon) Verizon Cellular Network when using NTRIP and Task Doc Pro			**In Base**
300-XR000	7295649	Less Massey Ferguson Guide (Requires Less SpeedSteer)	(M346500)		(4,500.00)
300-XR342*	7295654	Massey Ferguson Guide Standard (Verizon) with Novatel Smart7 Receiver Pass-to-Pass Accuracy of +/- 20 cm (+/- 8 inch) For correction signal WAAS (no subscription needed)	M211750		2,750.00
300-XR346*	7295655	Massey Ferguson Guide Standard (Verizon) Trimble® AG-382 Receiver Pass-to-Pass Accuracy of +/- 20 cm (+/- 8 inch) For correction signal WAAS (no subscription needed)	M273350		3,550.00
300-XR301*	7295650**	Massey Ferguson Guide Ready Package (GSM) Suggested for Canada and US where Verizon is not preferred when using NTRIP and Task Doc Pro			No Charge
300-XR302*	7295651	Massey Ferguson Guide Standard (GSM) with Novatel Smart7 Receiver Pass-to-Pass Accuracy of +/- 20 cm (+/- 8 inch) For correction signal WAAS (no subscription needed)	M211750		2,750.00
300-XR306*	7295652	Massey Ferguson Guide Standard (GSM) Trimble® AG-382 Receiver Pass-to-Pass Accuracy of +/- 20 cm (+/- 8 inch) For correction signal WAAS (no subscription needed)	M273350		3,550.00

***REQUIRES SPEEDSTEER AD004**

****TO COMPLETE MF GUIDE, ORDER FIELDSTAR 5 AND MF GUIDE RECEIVER FROM PARTS**

SPEEDSTEER					
185-AD004	Base	SpeedSteer Option Mandatory with Massey Ferguson Guide Ready Not Compatible with Less Massey Ferguson Guide- XR000			**In Base**
185-AD002	7293558	Less SpeedSteer	(M202510)		(2,630.00)
TELEMETRY					
160-BS002	Base	Massey Ferguson Connect Ready			**In Base**
160-BS119*	7295662	Massey Ferguson Connect Basic Package (Verizon) Verizon Cellular Network when using Massey Ferguson Connect	M136367		1,771.00
160-BS019*	7295660	Massey Ferguson Connect Basic Package (GSM) Suggested for Canada and US where Verizon is not preferred when using Massey Ferguson Connect	M136367		1,771.00

*** 5 YEAR SUBSCRIPTION, MUST BE ACTIVATED WITHIN 12 MONTHS OF WARRANTY REGISTRATION**

(F.O.B. PORT OF ENTRY)

Order Code	Catalog Number	Description	Factory Code	Approx. Weight (lb.)	List Price
PTO					
DYNA-6					
100-LC002	Base	Standard and Economy PTO Drive -2000 & 1550. . . . Engine RPM. Exchangeable Shaft PTO- 540 RPM 6 Spline + 1000 RPM 21 Spline			**In Base**
DYNA-VT					
100-LC003	Base	540/540E/1000 RPM Flanged PTO with one 6 Spline Shaft and one 21 Spline Shaft, with In-Cab Controls			**In Base**
FRONT HITCH					
230-FA000	Base	Less Front Hitch			**In Base**
230-F1132*	7293594	2800 kg (6172 lbs) Front Linkage with . . . . . 1 Set of Hydraulic Couplers	M526064		6,832.00
230-F1143*	7295195	2800 kg (6172 lbs) Front Linkage, Double Acting . . . Cylinders with 2 Sets of Front Hydraulic Couplers with Pressure Drain	M408716		5,308.00
***REQUIRES: SUSPENDED FRONT AXLE**					
LOADER PROVISION					
350-LL000	Base	Less Loader Provisions.			**In Base**
350-LL004	7293484	Front Loader Provisions including Hydraulics, Subframe Requires: Valves 1 and 2 Electric with a Joystick (KX012) Not Compatible with 2 sets of Front Hydraulic Couplers (Front Hitch)	M497420		6,460.00
350-LL005	7295249	Front Loader Provision w/Live 3rd-SMS Loader Control Requires: Valves 1 and 2 Electric with a Joystick (KX012) & Less Front Hitch	M606606		7,878.00
CAB					
365-AF011	7294227	Radio, AM/FM, CD Player and MP3 Compatible	M42350		550.00
125-AE042	7293546	Superluxe Grammar Seat	M147840		1,920.00
145-AL032	7295330	Telescopic Wide Angle Mirrors	M28413		369.00
145-AL033	7295497	Telescopic Wide Angle Mirrors with Electric De-Icing . . And Adjustment	M47047		611.00
120-AQ004	7293082	Automatic Climate Control	M89474		1,162.00
115-AM084	7293559	OptiRide Passive Mechanical Cab Suspension	M141988		1,844.00
115-AM117	7295495	OptiRide Active Mechanical Cab Suspension	M249711		3,243.00
140-AI020	7293077	Standard Cab Roof with Roof Hatch	M21868		284.00
140-E1022	7293078	Visio Roof, Includes 2 Front Double Bulb and . . . . . 2 Rear Double Bulb Worklights Not Compatible with AQ004 - Auto AC VGVK001 / VGVK002 Worklamp Options Massey Ferguson Guide - XR301	M127050		1,650.00
140-A0140	7293935	Visio Roof, Includes 2 LED Front Double Bulb and . 2 LED Rear Double Bulb Worklights Not Compatible with: VG078/VG113Worklamp Options Massey Ferguson Guide - XR301	M196658		2,554.00

(F.O.B. PORT OF ENTRY)

Order Code	Catalog Number	Description	Factory Code	Approx. Weight (lb.)	List Price
FRONT WEIGHTS					
285-YA112	7293487	121 lbs. (55 kg.) Front Weights, Set of 12 . . . . . with Hardware - total Weight 1,455 lbs. (660 kg.)	M189343		2,459.00
REAR WHEEL WEIGHTS					
325-RD040	7294192*	551 lbs. (250 kg.) Weights, Set of 2 . . . . . Mounts Externally to Wheel	M146377	1102	1,901.00
		***ONLY THE WELDED FIX RIMS OR RIMS ON ADJUSTABLE AXLE CAN HAVE FACTORY INSTALLED WEIGHTS**			
BELLY AND HITCH WEIGHTS					
245-YD001	7293374	1 Belly Weight - 584 lbs. (265 kg.) . . . . . (For use **WITHOUT** Front 3-Point Hitch)	M122969	584	1,597.00
345-YB003	7294270	1873 lbs. (850 kg.) Monoblock Weight	M281050	1984	3,650.00
		***NOT COMPATIBLE WITH FRONT WEIGHTS**			
ELECTRICAL					
215-CB000	Base	Less Engine Block Heater			**In Base**
215-CB002	7295498	Engine Block Heater - 110 Volt	M17094		222.00
ALTERNATOR					
220-CE019	Base	Twin 120 AMP Alternators.			**In Base**
220-CE020	7293561	175 AMP Alternator. . . . . (Not Available with ISOBUS)	(M31647)		(411.00)
LIGHTING					
195	**Base**	4 Single Bulb Front Worklights, 2 Double Bulb Rear . . Worklights, Worklights on Handrails and Rear Fenders			**In Base**
195-A0149	7294329	4 LED Front Worklights, 2 LED Rear Worklights . . . . LED Worklights on Front Hood, Handrails and Rear Fenders	M215138		2,794.00
360-VE019	7293476	Extremity Lighting . . . . . (Required with Long Bar Axle)	M62370		810.00
205-VF013	7293103	Dual Roof-Mounted Rotating Beacons, Left and Right . (Includes SAE SMV sign)	M41811	1102	543.00

(F.O.B. PORT OF ENTRY)

Order Code	Catalog Number	Description	Factory Code	Approx. Weight (lb.)	List Price
PIVOTING FRONT FENDERS					
155-WE000	Base	Less Pivoting Front Fenders			**In Base**
155-WE110	7294204	Pivoting Front Fenders - Standard Width	M134750		1,750.00
155-WE111	7294205	Pivoting Front Fenders - Wide Width	M158928		2,064.00

Width depends on tire selection; see Chart Below

Fender Size		
Standard	**Wide**	**Tire Sizes**
12.6" (320 mm)	13.9" (355 mm)	320/85R34 (12.4R34)
13.9" (355 mm)	14.9" (380 mm)	340/85R24 (13.6R24) 340/85R28 (13.6R28)
14.9" (380 mm)	16.1" (410 mm)	380/85R28 (14.9R28) 380/85R30 (14.9R30) 400/80R24 400/80R28
16.1" (410 mm)	18.5" (470 mm)	420/85R28 (16.9R28) 440/65R28
18.5" (470 mm)	20.4" (520 mm)	440/80R28 480/65R28
20.4" (520 mm)	24.4" (620 mm)	540/65R28

REAR FENDERS					
255-WD012	Base	Rear Fenders without Extensions, 78.74"(2.00 M)			**In Base**
255-WD017	7293107	Wide Fender -90.55" (2.3 M) with Rear Extension	M106029		1,377.00
255-WD020	7293109	Extra Wide Fender -100.4" (2.55 M) with Rear Extension	M120813		1,569.00

(F.O.B. PORT OF ENTRY)

Order Code	Catalog Number	Description	Factory Code	Approx. Weight (lb.)	List Price
MISCELLANEOUS					
35-EN002	7293402	14:1 Super Creeper Reduction Gear (**Not Compatible with Dyna-VT**)	M239855		3,115.00
250-GS001	7293100	Hydraulic Trailer Brakes	M67452		876.00
250-GS067	7293552	Pneumatic & Hydraulic Trailer Brakes	M619465		8,045.00
225-LQ001	7293553	Water Separator (Fuel Filter)	M37345		485.00
275-TC005	7294210	French Language OIB			No Charge
275-TC011	7294211	Spanish Language OIB			No Charge
DEALER INSTALLED OPTIONS					
FRONT WEIGHTS					
	5020186M	8 x 55 KG (121 lbs.) Front Weights	M123739	968	1,607.00
	5020187M	10 x 55 KG (121 lbs.) Front Weights	M153230	1210	1,990.00
	5020188M	12 x 55 KG (121 lbs.) Front Weights	M189343	1452	2,459.00
	5020189M	14 x 55 KG (121 lbs.) Front Weights	M220913	1694	2,869.00

Order Code	Catalog Number	Description (F.O.B. PORT OF ENTRY)	Factory Code	Approx. Weight (lb.)	List Price

TIRES for 6715S Dyna-6

TIRE BRAND SELECTION

70-Blank	7294212	Factory Brand Choice			No Charge
70-T0001	7294195	Michelin Brand Required	M150150		1,950.00
70-T0007	7294197	Firestone Brand Required	M94633		1,229.00
70-T0010	7294198	Trelleborg Brand Required	M94633		1,229.00
70-T0014	7294250	Nokian Brand Required	M92862		1,206.00

FRONT AND REAR TIRES

BAR AXLES- SHORT AND LONG

Rear: Single Welded Pressed Steel - Set of 2
Front: Fixed Welded Steel Rim

75-W1667	7294903B4 7293767	Rear: 480/80R34 Industrial (Nokian Industrial) Front: 400/80R24 Industrial (Nokian Industrial)	M408716		5,308.00
75-W1670	7294899B4 7293757	Rear: 540/65R38 R1W (MI, FI, TR) Front: 440/65R28 R1W (MI, FI, TR)	(M52360)		(680.00)
75-W1572	7294894B4 7294785	Rear: 600/65R38 R1W (MI, FI, TR) Front: 480/65R28 R1W (MI, FI, TR)	(M05852)		(76.00)
75-W1673	7294905B4 7293769	Rear: 540/80R38 (Nokian Industrial) Front: 440/80R28 (Nokian Industrial)	M729960		9,480.00
75-W1262	7294895B4 7293759	Rear: 650/65R38 R1W (MI, FI, TR) Front: 540/65R28 R1W (MI, FI, TR)	M240856		3,128.00
75-W1672	7294904B4 7293768	Rear: 480/80R38 Industrial (Nokian Industrial) Front: 400/80R28 Industrial (Nokian Industrial)	M525294		6,822.00

BAR AXLES- SHORT AND LONG

Rear: Single Semi Dished Cast Centers- Set of 2
Front: Waffle Wheel

75-W1300	7294897B4 7294786	Rear: 460/85R38 R1W (18.4R38) (MI, FI, TR) Front: 380/85R28 R1W (14.9R28) (MI, FI, TR)			**In Base**
75-W1318	7294883B4 7293764	Rear: 380/90R46 R1W (MI) Front: 380/85R30 R1W (MI)	M116886		1,518.00
75-W1409	7294884B4 7293764	Rear: 420/80R46 R1W (MI) Front: 380/85R30 R1W (MI)	M173712		2,256.00
75-W1388	7294884B4 7293763	Rear: 420/80R46 R1W (MI) Front: 420/85R28 R1W (MI)	M225995		2,935.00
75-W1377	7294882B4 7293764	Rear: 480/80R42 R1W (MI, TR) Front: 380/85R30 R1W (MI, TR)	M116501		1,513.00
75-W1384	7294882B4 7293763	Rear: 480/80R42 R1W (MI, TR) Front: 420/85R28 R1W (MI, TR)	M168784		2,128.00
75-W1533	7294893B4 7293763	Rear: 520/85R38 R1W (MI, FI, TR) Front: 420/85R28 R1W (MI, FI, TR)	M224070		2,910.00

Order Code	Catalog Number	Description (F.O.B. PORT OF ENTRY)	Factory Code	Approx. Weight (lb.)	List Price

TIRES for 6715S Dyna-6

FRONT AND REAR TIRES

		BAR AXLES- LONG			
		Rear: Dual Cast Inner / Steel Outer - Set of 4			
		Front: Waffle Wheel			
75-W1374	7294898B4 7294786	Duals: 460/85R38 R1W (18.4R38) (MI, TR, FI) Front: 380/85R28 R1W (14.9R28) (MI, TR, FI)	M586047		7,611.00
75-W1379	7294887B4 7293764	Duals: 380/90R46 R1W (MI) Front: 380/85R30 R1W (MI)	M725109		9,417.00
75-W1410	7294888B4 7293764	Duals: 420/80R46 R1W (MI) Front: 380/85R30 R1W (MI)	M803726		10,438.00
75-W1471	7294888B4 7293763	Duals: 420/80R46 R1W (MI) Front: 420/85R28 R1W (MI)	M856009		11,117.00
75-W1380	7294886B4 7293764	Duals: 480/80R42 R1W (MI, TR) Front: 380/85R30 R1W (MI, TR)	M665511		8,643.00
75-W1386	7294886B4 7293763	Duals: 480/80R42 R1W (MI, TR) Front: 420/85R28 R1W (MI, TR)	M717794		9,322.00
75-W1658	7294896B4 7293763	Duals: 520/85R38 R1W (MI, TR, FI) Front: 420/85R28 R1W (MI, TR, FI)	M738045		9,585.00
		BAR AXLES- LONG			
		Rear: Dual Cast Inner / Cast Outer - Set of 4			
		Front: Waffle Wheel			
75-W1408	7294925B4 7293764	Duals: 380/90R46 R1W (MI) Front: 380/85R30 R1W (MI)	M733502		9,526.00
75-W1412	7294926B4 7293764	Duals: 420/80R46 R1W (MI) Front: 380/85R30 R1W (MI)	M812119		10,547.00
75-W1406	7294926B4 7293763	Duals: 420/80R46 R1W (MI) Front: 420/85R28 R1W (MI)	M864402		11,226.00
75-W1407	7294927B4 7293764	Duals: 480/80R42 R1W (MI, TR) Front: 380/85R30 R1W (MI, TR)	M673904		8,752.00
75-W1405	7294927B4 7293763	Duals: 480/80R42 R1W (MI, TR) Front: 420/85R28 R1W (MI, TR)	M726187		9,431.00

MASSEY FERGUSON®

(F.O.B. PORT OF ENTRY)

TIRES for 6716S & 6718S Dyna-6

TIRE BRAND SELECTION

Order Code	Catalog Number	Description	Factory Code	Approx. Weight (lb.)	List Price
70-Blank	7294212	Factory Brand Choice			No Charge
70-T0001	7294195	Michelin Brand Required	M150150		1,950.00
70-T0007	7294197	Firestone Brand Required	M94633		1,229.00
70-T0010	7294198	Trelleborg Brand Required	M94633		1,229.00
		BAR AXLES- SHORT AND LONG			
		Rear: Single Welded Pressed Steel - Set of 2			
		Front: Fixed Welded Steel Rim			
75-W1670	7294899B4 7294784B2	R: 540/65R38 R1W (MI, FI, TR) F: 440/65R28 R1W (MI, FI, TR)	(M52360)		(680.00)
75-W1572	7294894B4 7293758B2	R: 600/65R38 R1W (MI, FI, TR) F: 480/65R28 R1W (MI, FI, TR)	(M05852)		(76.00)
75-W1673	7294905B4 7294791B2	R: 540/80R38 (Nokian Industrial) F: 440/80R28 (Nokian Industrial)	M729960		9,480.00
75-W1262	7294895B4 7294783B2	R: 650/65R38 R1W (MI, FI, TR) F: 540/65R28 R1W (MI, FI, TR)	M240856		3,128.00
		BAR AXLES- SHORT AND LONG			
		Rear: Single Semi Dished Cast Centers- Set of 2			
		Front: Waffle Wheel			
75-Base	7294897B4 7293762B2	Rear: 460/85R38 R1W (18.4R38) (MI, FI, TR) Front: 380/85R28 R1W (14.9R28) (MI, FI, TR)			**In Base**
75-W1533	7294893B4 7294762B2	Rear: 520/85R38 R1W (MI, FI, TR) Front: 420/85R28 R1W (MI, FI, TR)	M224070		2,910.00
75-W1377	7294882B4 7294765B2	Rear: 480/80R42 R1W (MI, TR) Front: 380/85R30 R1W (MI, TR)	M116501		1,513.00
75-W1620	7294882B4 7294769B2	Rear: 480/80R42 R1W (MI) Front: 320/85R34 R1W (MI)	M177716		2,308.00
75-W1548	7294883B4 7294769B2	Rear: 380/90R46 R1W (MI) Front: 320/85R34 R1W (MI)	M178101		2,313.00
75-W1388	7294884B4 7294762B2	Rear: 420/80R46 R1W (MI) Front: 420/85R28 R1W (MI)	M225995		2,935.00
75-W1409	7294884B4 7294765B2	Rear: 420/80R46 R1W (MI) Front: 380/85R30 R1W (MI)	M173712		2,256.00
75-W1624	7294884B4 7294769B2	Rear: 420/80R46 R1W (MI) Front: 320/85R34 R1W (MI)	M234927		3,051.00
75-W1318	7294883B4 7294765B2	Rear: 380/90R46 R1W (MI) Front: 380/85R30 R1W (MI)	M116886		1,518.00
75-W1394	7294885B4 7294769B2	Rear: 320/90R50 R1W (MI) Front: 320/85R34 R1W (MI)	M130207		1,691.00
75-W1384	7294882B4 7294762B2	Rear: 480/80R42 R1W (MI, TR) Front: 420/85R28 R1W (MI, TR)	M168784		2,192.00

(F.O.B. PORT OF ENTRY)

Order Code	Catalog Number	Description	Factory Code	Approx. Weight (lb.)	List Price

TIRES for 6716S & 6718S Dyna-6

FRONT AND REAR TIRES - CONTINUED

BAR AXLES- LONG

Rear: Dual Cast Inner / Steel Outer - Set of 4
Front: Waffle Wheel

75-W1374	7294898B4 7293762B2	Duals: 460/85R38 R1W (18.4R38) (MI, TR, FI) Front: 380/85R28 R1W (14.9R28) (MI, TR, FI)	M586047		7,611.00
75-W1395	7294889B4 7294769B2	Duals: 320/90R50 R1W (MI) Front: 320/85R34 R1W (MI)	M807037		10,481.00
75-W1549	7294887B4 7294769B2	Duals: 380/90R46 R1W (MI) Front: 320/85R34 R1W (MI)	M786324		10,212.00
75-W1379	7294887B4 7294765B2	Duals: 380/90R46 R1W (MI) Front: 380/85R30 R1W (MI)	M725109		9,417.00
75-W1625	7294888B4 7294769B2	Duals: 420/80R46 R1W (MI) Front: 320/85R34 R1W (MI)	M864941		11,233.00
75-W1410	7294888B4 7294765B2	Duals: 420/80R46 R1W (MI) Front: 380/85R30 R1W (MI)	M803726		10,438.00
75-W1471	7294888B4 7294762B2	Duals: 420/80R46 R1W (MI) Front: 420/85R28 R1W (MI)	M856009		11,117.00
75-W1621	7294886B4 7294769B2	Duals: 480/80R42 R1W (MI) Front: 320/85R34 R1W (MI)	M726726		9,438.00
75-W1380	7294886B4 7294765B2	Duals: 480/80R42 R1W (MI, TR) Front: 380/85R30 R1W (MI, TR)	M665511		8,643.00
75-W1386	7294886B4 7294762B2	Duals: 480/80R42 R1W (MI, TR) Front: 420/85R28 R1W (MI, TR)	M717794		9,322.00
75-W1658	7294896B4 7294762B2	Duals: 520/85R38 R1W (MI, TR, FI) Front: 420/85R28 R1W (MI, TR, FI)	M738045		9,585.00

BAR AXLES- LONG

Rear: Dual Cast Inner / Cast Outer - Set of 4
Front: Waffle Wheel

75-W1408	7294925B4 7294765B2	Duals: 380/90R46 R1W (MI) Front: 380/85R30 R1W (MI)	M733502		9,526.00
75-W1412	7294926B4 7294765B2	Duals: 420/80R46 R1W (MI) Front: 380/85R30 R1W (MI)	M812119		10,547.00
75-W1406	7294926B4 7294762B2	Duals: 420/80R46 R1W (MI) Front: 420/85R28 R1W (MI)	M864402		11,226.00
75-W1407	7294927B4 7294765B2	Duals: 480/80R42 R1W (MI, TR) Front: 380/85R30 R1W (MI, TR)	M673904		8,752.00
75-W1405	7294927B4 7294762B2	Duals: 480/80R42 R1W (MI, TR) Front: 420/85R28 R1W (MI, TR)	M726187		9,431.00

(F.O.B. PORT OF ENTRY)

Order Code	Catalog Number	Description	Factory Code	Approx. Weight (lb.)	List Price

TIRES for 6714S Dyna-VT

FRONT AND REAR TIRES - CONTINUED

		BAR AXLES- SHORT AND LONG			
		Rear: Single Welded Pressed Steel - Set of 2			
		Front: Fixed Welded Steel Rim			
75-W1670	7294899B4 7293757	Rear: 540/65R38 R1W (MI, FI, TR) Front: 440/65R28 R1W (MI, FI, TR)	(M52360)		(680.00)
75-W1572	7294894B4 7294785	Rear: 600/65R38 R1W (MI, FI, TR) Front: 480/65R28 R1W (MI, FI, TR)	(M05852)		(76.00)
75-W1673	7294905B4 7293769	Rear: 540/80R38 (Nokian Industrial) Front: 440/80R28 (Nokian Industrial)	M729960		9,480.00
75-W1262	7294895B4 7293759	Rear: 650/65R38 R1W (MI, FI, TR) Front: 540/65R28 R1W (MI, FI, TR)	M240856		3,128.00
75-W1667	7294903B4 7293767	Rear: 480/80R34 Industrial (Nokian Industrial) Front: 400/80R24 Industrial (Nokian Industrial)	M408716		5,308.00
75-W1672	7294904B4 7293768	Rear: 480/80R38 Industrial (Nokian Industrial) Front: 400/80R28 Industrial (Nokian Industrial)	M525294		6,822.00
		Rear: Single Semi Dished Cast Centers- Set of 2			
		Front: Waffle Wheel			
75-Base	7294897B4 7294786	Rear: 460/85R38 R1W (18.4R38) (MI, FI, TR) Front: 380/85R28 R1W (14.9R28) (MI, FI, TR)			**In Base**
75-W1533	7294893B4 7293763	Rear: 520/85R38 R1W (MI, FI, TR) Front: 420/85R28 R1W (MI, FI, TR)	M224070		2,910.00
75-W1377	7294882B4 7293764	Rear: 480/80R42 R1W (MI, TR) Front: 380/85R30 R1W (MI, TR)	M116501		1,513.00
75-W1388	7294884B4 7293763	Rear: 420/80R46 R1W (MI) Front: 420/85R28 R1W (MI)	M225995		2,935.00
75-W1409	7294884B4 7293764	Rear: 420/80R46 R1W (MI) Front: 380/85R30 R1W (MI)	M173712		2,256.00
75-W1318	7294883B4 7293764	Rear: 380/90R46 R1W (MI) Front: 380/85R30 R1W (MI)	M116886		1,518.00
75-W1384	7294882B4 7293763	Rear: 480/80R42 R1W (MI, TR) Front: 420/85R28 R1W (MI, TR)	M168784		2,192.00
		BAR AXLES- LONG			
		Rear: Dual Cast Inner / Steel Outer - Set of 4			
		Front: Waffle Wheel			
75-W1374	7294898B4 7294786	Duals: 460/85R38 R1W (18.4R38) (MI, TR, FI) Front: 380/85R28 R1W (14.9R28) (MI, TR, FI)	M586047		7,611.00
75-W1379	7294887B4 7293764	Duals: 380/90R46 R1W (MI) Front: 380/85R30 R1W (MI)	M725109		9,417.00
75-W1410	7294888B4 7293764	Duals: 420/80R46 R1W (MI) Front: 380/85R30 R1W (MI)	M803726		10,438.00
75-W1471	7294888B4 7293763	Duals: 420/80R46 R1W (MI) Front: 420/85R28 R1W (MI)	M856009		11,117.00
75-W1380	7294886B4 7293764	Duals: 480/80R42 R1W (MI, TR) Front: 380/85R30 R1W (MI, TR)	M665511		8,643.00
75-W1386	7294886B4 7293763	Duals: 480/80R42 R1W (MI, TR, FI) Front: 420/85R28 R1W (MI, TR, FI)	M717794		9,322.00
75-W1658	7294896B4 7293763	Duals: 520/85R38 R1W (MI, FI, TR) Front: 420/85R28 R1W (MI, FI, TR)	M738045		9,585.00

(F.O.B. PORT OF ENTRY)

TIRES for 6715S, 6716S & 6718S Dyna-VT

FRONT AND REAR TIRES - CONTINUED

Order Code	Catalog Number	Description	Factory Code	Approx. Weight (lb.)	List Price
		BAR AXLES- SHORT AND LONG			
		Rear: Single Welded Pressed Steel - Set of 2			
		Front: Fixed Welded Steel Rim			
75-W1670	7294899B4 7294784B2	Rear: 540/65R38 R1W (MI, FI, TR) Front: 440/65R28 R1W (MI, FI, TR)	(M52360)		(680.00)
75-W1572	7294894B4 7293758B2	Rear: 600/65R38 R1W (MI, FI, TR) Front: 480/65R28 R1W (MI, FI, TR)	(M05852)		(76.00)
75-W1673	7294905B4 7294791B2	Rear: 540/80R38 (Nokian Industrial) Front: 440/80R28 (Nokian Industrial)	M729960		9,480.00
75-W1262	7294895B4 7294783B2	Rear: 650/65R38 R1W (MI, FI, TR) Front: 540/65R28 R1W (MI, FI, TR)	M240856		3,128.00
		Rear: Single Semi Dished Cast Centers- Set of 2			
		Front: Waffle Wheel			
75-Base	7294897B4 7293762B2	Rear: 460/85R38 R1W (18.4R38) (MI, FI, TR) Front: 380/85R28 R1W (14.9R28) (MI, FI, TR)			**In Base**
75-W1533	7294893B4 7294762B2	Rear: 520/85R38 R1W (MI, FI, TR) Front: 420/85R28 R1W (MI, FI, TR)	M224070		2,910.00
75-W1377	7294882B4 7294765B2	Rear: 480/80R42 R1W (MI, TR) Front: 380/85R30 R1W (MI, TR)	M116501		1,513.00
75-W1620	7294882B4 7294769B2	Rear: 480/80R42 R1W (MI) Front: 320/85R34 R1W (MI)	M177716		2,308.00
75-W1548	7294883B4 7294769B2	Rear: 380/90R46 R1W (MI) Front: 320/85R34 R1W (MI)	M178101		2,313.00
75-W1388	7294884B4 7294762B2	Rear: 420/80R46 R1W (MI) Front: 420/85R28 R1W (MI)	M225995		2,935.00
75-W1409	7294884B4 7294765B2	Rear: 420/80R46 R1W (MI) Front: 380/85R30 R1W (MI)	M173712		2,256.00
75-W1624	7294884B4 7294769B2	Rear: 420/80R46 R1W (MI) Front: 320/85R34 R1W (MI)	M234927		3,051.00
75-W1318	7294883B4 7294765B2	Rear: 380/90R46 R1W (MI) Front: 380/85R30 R1W (MI)	M116886		1,518.00
75-W1394	7294885B4 7294769B2	Rear: 320/90R50 R1W (MI) Front: 320/85R34 R1W (MI)	M130207		1,691.00
75-W1384	7294882B4 7294762B2	Rear: 480/80R42 R1W (MI, TR) Front: 420/85R28 R1W (MI, TR)	M168784		2,192.00

(F.O.B. PORT OF ENTRY)

Order Code	Catalog Number	Description	Factory Code	Approx. Weight (lb.)	List Price

TIRES for 6715S, 6716S & 6718S Dyna-VT

FRONT AND REAR TIRES - CONTINUED

BAR AXLES- LONG

Rear: Dual Cast Inner / Steel Outer - Set of 4
Front: Waffle Wheel

75-W1374	7294898B4 7293762B2	Duals: 460/85R38 R1W (18.4R38) (MI, TR, FI) Front: 380/85R28 R1W (14.9R28) (MI, TR, FI)	M586047		7,611.00
75-W1395	7294889B4 7294769B2	Duals: 320/90R50 R1W (MI) Front: 320/85R34 R1W (MI)	M807037		10,481.00
75-W1549	7294887B4 7294769B2	Duals: 380/90R46 R1W (MI) Front: 320/85R34 R1W (MI)	M786324		10,212.00
75-W1379	7294887B4 7294765B2	Duals: 380/90R46 R1W (MI) Front: 380/85R30 R1W (MI)	M725109		9,417.00
75-W1625	7294888B4 7294769B2	Duals: 420/80R46 R1W (MI) Front: 320/85R34 R1W (MI)	M864941		11,233.00
75-W1410	7294888B4 7294765B2	Duals: 420/80R46 R1W (MI) Front: 380/85R30 R1W (MI)	M803726		10,438.00
75-W1471	7294888B4 7294762B2	Duals: 420/80R46 R1W (MI) Front: 420/85R28 R1W (MI)	M856009		11,117.00
75-W1621	7294886B4 7294769B2	Duals: 480/80R42 R1W (MI) Front: 320/85R34 R1W (MI)	M726726		9,438.00
75-W1380	7294886B4 7294765B2	Duals: 480/80R42 R1W (MI, TR) Front: 380/85R30 R1W (MI, TR)	M665511		8,643.00
75-W1386	7294886B4 7294762B2	Duals: 480/80R42 R1W (MI, TR) Front: 420/85R28 R1W (MI, TR)	M717794		9,322.00
75-W1658	7294896B4 7294762B2	Duals: 520/85R38 R1W (MI, TR, FI) Front: 420/85R28 R1W (MI, TR, FI)	M738045		9,585.00

RESERVED

MASSEY FERGUSON®

7700S SERIES

HIGH HORSEPOWER

Beauvais Built

Dyna-6, and Small Frame Dyna-VT
Possible Order Modifications in Weeks

	>9	7-9	5-6	Scheduled Completion Date
Massey Ferguson Guide	o	X	X	
Front Axle/Rear Axle Type	o	X	X	
Air Conditioning/Heater	o	o	X	
Cab Audio	o	o	X	
Control Center Display (CCD)	o	o	X	
Front Fenders	o	o	X	
Front Weights	o	o	X	
Hydraulic & Pneumatic Trailer Brake	o	o	X	
Hydraulic Remotes	o	o	X	
Rear Fenders	o	o	X	
Rear Linkage & PTO	o	o	X	
Seat	o	o	X	
Wheels & Tires	o	o	X	
Working Lights & Mirrors	o	o	X	

Jackson Built

Possible Order Modifications in Weeks

	> 18	16 - 18	14 - 16	10 -14	6 - 10
Massey Ferguson Guide	o	o	o	X	X
Front Axle/Rear Axle Type	o	0	X	X	X
Air Conditioning/Heater	o	o	o	X	X
Cab Audio	o	o	o	o	o
Control Center Display (CCD)	o	o	o	X	X
Front Fenders	o	o	o	o	o
Front Weights	o	o	o	o	o
Hydraulic/Pneumatic Trailer Brake	o	o	X	X	X
Hydraulic Remotes	o	o	o	X	X
Rear Fenders	o	o	o	X	X
Rear Linkage & PTO	o	o	X	X	X
Seat	o	o	o	X	X
Wheel & Tires	o	o	X	X	X
Working Lights & Mirrors	o	o	o	X	X

o = Components can be requested to be modified.
X = Components are frozen and cannot be modified.
*Dates subject to change without notice.

Guidelines for Availability and Order Changes

These charts list the possible change requests that can be made to the listed components through e-Ordering. The information provided is built off of the Scheduled Completion Date.

***Scheduled Completion Date; Not the Planned Available To Ship (PATS) Date**

MASSEY FERGUSON®

7715S / 7716S / 7718S SERIES

HIGH HORSEPOWER

7700S SMALL FRAME CLASSIC EDITION

MASSEY FERGUSON®

(F.O.B. PORT OF ENTRY)

CLASSIC EDITION FEATURES

ENGINE
7715S/7716S/7718S
7715S: 140 Rated Engine HP, 120 PTO HP, 150 Max Engine HP
7716S: 150 Rated Engine HP, 125 PTO HP, 160 Max Engine HP
7718S: 165 Rated Engine HP, 135 PTO HP, 175 Max Engine HP
Rated Engine Power @ 2100 RPM

AGCO POWER™ 6.6L (403 cu in.) 6 Cylinder, Tier 4f Compliant
- SCR Technology
- Air-to-Air Aftercooled, Common Rail Injection, Turbocharged

Electronic Engine Management (EEM) with Dual ERPM Settings
Electronic Controlled Viscous Fan Drive
Dual Element Dry Type Air Cleaner
Vertical Exhaust at Right Front Cab Post
Cooling System: Antifreeze to Minus 30F (-34C)
Fuel Tank Capacity: 82 Gal (310L)
DEF Tank Capacity: 8 Gal (30L)

POWERTRAIN
7715S/7716S/7718S: Dyna-6 Transmission
- 24F/24R Semi-Powershift, 4 Ranges with 6 Powershifts per Range

Multi-Disc Wet Brakes
Power Differential Lock
Independent PTO: 540/1000 RPM, 540 with 6 Spline Shaft,
1000 RPM with 21 Spline Shaft, Exchangeable Shafts
Rear Fender Mounted PTO Shut-Off
Flange Axles
Less SV1 & SV2 Settings

FRONT WHEEL ASSIST AXLE
Power Front Axle (PFA)
- 8 Bolt Pattern: 7715S/7716S Dyna-6
- 10 Bolt Pattern: 7718S Dyna-6

Shielded Center Drive Line with Electro-Hydraulic Control
& Front Wheel Drive Differential Lock
55 Degree Steering Angle

HYDRAULICS
Closed Center Load Sensing 29 GPM (110 L/Min) Pump
2900 PSI (200 Bar) Maximum Pressure
3 Mechanical Valves – Lever Controlled on Right Hand Console
Hydrostatic Power Steering

HITCH
3 Point Hitch: Category 2/3 Linkage Ball Ends
- Active Transport Control
- Lower Link Sensing
- Electronic Draft Control, Electronic Height Control, and Rate of Drop
- Variable Float Telescopic Stabilizers
- Left and Right Side External 3 Point Control

Drawbar: Category 2, Clevis and Drop Pin

ELECTRICAL SYSTEM
Twin 120 AMP Alternators
2 – 12V Batteries, 600 CCA Each (SAE)
7 Pin ASAE Rear Trailer Electrical Outlet
Electrical Isolator Switch and Jumpstart Point
110V Engine Block Heater
Ignition with Neutral Start and Key Shutoff

LIGHTING
8 Front Hood Mounted Lights
Four Front Single Bulb Worklights
Two Rear Double Bulb Worklights
Two Field Lights on Hand Rails and Rear Fenders with
Taillights, Flashing Warning Lights, and Turn Signals

INSTRUMENTS
Setup and Information Screen (SIS)
FieldStar 5 (Isobus and Guidance)
Tachometer: Digital and Analog
PTO Speed: Digital
Ground Speed Display: Digital
Fuel Level, DEF Level, and Coolant Temp Gauges
Warning/Information Lights

OPERATOR AREA
Instructor Seat with Seat Belt
6 Post Cab
Transmission Control T-Handle on Right Hand Console
Adjustable Steering Column with SpeedSteer
Front Sun Visor
Air Conditioning and Heater
Air Suspended Seat - Manual Adjustment
Front and Rear Windshield Wiper/Washer
Dual Large Telescoping Outside Rear View Mirrors
Single Inside Rear View Mirror
3 Pin 12V Power Outlets
12V Cigarette Lighter Style Power Outlet

WHEELS AND TIRES
Rear 460/85R38 R1W Single Wheels
Front 380/85R28 R1W Single Waffle Wheels

OTHER STANDARD FEATURES
Massey Ferguson Guide Ready (Verizon)
Massey Ferguson Connect Ready
TaskDoc
Lockable Tool Box
SMV Sign
Molded Rear Fenders
English Literature

(F.O.B. PORT OF ENTRY)

Order Code	Catalog Number	Description	Factory Code	Approx. Weight (lb.)	List Price

ONE *ORDER CODE* FROM EACH GROUP MUST BE SPECIFIED. (Unless In Base Option is desired)

BASE MACHINE

DYNA-6 EDITIONS -- Beauvais Built

MF7715S~D6~ES~07	7295638	Massey 7715S Classic Tractor 120 PTO HP	M13266407		172,291.00
MF7716S~D6~ES~07	7295639	Massey 7716S Classic Tractor 125 PTO HP	M13530132		175,716.00
MF7718S~D6~ES~07	7295640	Massey 7718S Classic Tractor 135 PTO HP	M14399539		187,007.00

TRANSMISSION OPTIONS FOR DYNA-6 EDITIONS

FOR MF7715S AND MF7716S

25-EA655	Base	6x4 Dyna-6 Transmission with 24F/24R gears . . . . 25 MPH (40 KPH) with Dynamic Tractor Management (DTM) Includes: Non-Suspended Power Front Axle & Power Assisted Main Brakes			**In Base**
25-NA032	7295476	6x4 Dyna-6 Transmission with 24F/24R gears . . . . 25 MPH (40 KPH) with Dynamic Tractor Management (DTM) Includes: Suspended Power Front Axle	M563563		7,319.00
25-G1061	7295181	6X4 Dyna-6 Transmission with 24F/24R gears . . . . 31 MPH (50 KPH) with Dynamic Tractor Management (DTM). Includes: Suspended Power Front Axle & High Capacity Power Assist Brakes	M807345		10,485.00

FOR MF7718S

25-EA655	Base	6x4 Dyna-6 Transmission with 24F/24R gears . . . . 25 MPH (40 KPH) with Dynamic Tractor Management (DTM) Includes: Non-Suspended Power Front Axle & Power Assisted Main Brakes			**In Base**
25-NA032	7295477	6x4 Dyna-6 Transmission with 24F/24R gears . . . . 25 MPH (40 KPH) with Dynamic Tractor Management (DTM) Includes: Suspended Power Front Axle	M563563		7,319.00
25-G1061	7295183	6X4 Dyna-6 Transmission with 24F/24R gears . . . . 31 MPH (50 KPH) with Dynamic Tractor Management (DTM). Includes: Suspended Power Front Axle & High Capacity Power Assist Brakes	M807345		10,485.00

AUXILIARY HYDRAULIC FLOW

370-DP110	Base	29 gpm (110 L/min) Closed Center Load Sensing (CCLS) System			**In Base**

AUXILIARY VALVE 1 & 2

50-KX010	Base	2 Mechanical Controlled Valves, ... Located on right hand console. (1st and 2nd - Flow Dividing, Kickout, Zero Leak, Float)			**In Base**

AUXILIARY VALVE 3 & 4

55-MU003	Base	3rd Mechanical Valve Only, ... Located on right hand console. (Kickout, Zero Leak, Flow Dividing, Float)			**In Base**
55-MU012	7293531	3rd and 4th Mechanically Controlled Valves, ... with levers located in Right Hand Console Kickout, Zero Leak, Flow Dividing, Float	M94633		1,229.00

POWER BEYOND

90-GR000	Base	Less Power Beyond			**In Base**
90-GR010	7295153	Power Beyond Couplers P/T/LS/D	M59598		774.00

(F.O.B. PORT OF ENTRY)

Order Code	Catalog Number	Description	Factory Code	Approx. Weight (lb.)	List Price
REAR AXLE					
60-EE400	Base	Flange Axle			**In Base**
60-EE402	7293024	Short Bar Rear Axle, 80 in. (2028mm) Long, 3.23 in (82mm) Diameter	M50281		653.00
60-EE404	7293025	Long Bar Rear Axle, 3.23 in (82mm) Diameter, 105 in (2672mm) Long (Requires: Extremity Lights VE019)	M114961		1,493.00
REAR 3-POINT HITCH					
85-GC009	Base	Category 2/3 Telescopic Ball End Links			**In Base**
85-GC025	7293405	Category 3 Hook End Links, with Hook Style Links and Cat 3/3 and Cat 2/3 Balls and Cones.	M09471		123.00
INSTRUMENT PANEL					
175- BA051	7295648	FieldStar 5 (Isobus and Massey Ferguson Guide) All XR options available			**In Base**
175-BA005	7295647	System Information Screen	(M628628)		(8,164.00)
175-BA003	7295658	System Information Screen with Radar (For Actual Ground Speed and Slip Control)	(M563948)		(7,324.00)
		FOR COMPLETE GUIDANCE PLEASE ORDER FIELDSTAR 5 FROM PARTS			
MASSEY FERGUSON GUIDE					
300-XR341*	7295653**	Massey Ferguson Guide Ready Package (Verizon) Verizon Cellular Network when using NTRIP and Task Doc Pro			**In Base**
300-XR000	7295649	Less Massey Ferguson Guide (Requires Less SpeedSteer)	(M346500)		(4,500.00)
300-XR342*	7295654	Massey Ferguson Guide Standard (Verizon) with Novatel Smart7 Receiver Pass-to-Pass Accuracy of +/- 20 cm (+/- 8 inch) For correction signal WAAS (no subscription needed)	M211750		2,750.00
300-XR346*	7295655	Massey Ferguson Guide Standard (Verizon) Trimble® AG-382 Receiver Pass-to-Pass Accuracy of +/- 20 cm (+/- 8 inch) For correction signal WAAS (no subscription needed)	M273350		3,550.00
300-XR301*	7295650**	Massey Ferguson Guide Ready Package (GSM) Suggested for Canada and US where Verizon is not preferred when using NTRIP and Task Doc Pro			No Charge
300-XR302*	7295651	Massey Ferguson Guide Standard (GSM) with Novatel Smart7 Receiver Pass-to-Pass Accuracy of +/- 20 cm (+/- 8 inch) For correction signal WAAS (no subscription needed)	M211750		2,750.00
300-XR306*	7295652	Massey Ferguson Guide Standard (GSM) Trimble® AG-382 Receiver Pass-to-Pass Accuracy of +/- 20 cm (+/- 8 inch) For correction signal WAAS (no subscription needed)	M273350		3,550.00
***REQUIRES SPEEDSTEER AD004**					
****TO COMPLETE MF GUIDE, ORDER FIELDSTAR 5 AND MF GUIDE RECEIVER FROM PARTS**					
SPEEDSTEER					
185-AD004	Base	SpeedSteer Option Mandatory with Massey Ferguson Guide Ready Not Compatible with Less Massey Ferguson Guide- XR000			**In Base**
185-AD002	7293558	Less SpeedSteer	(M202510)		(2,630.00)
TELEMETRY					
160-BS002	Base	Massey Ferguson Connect Ready			**In Base**
160-BS119*	7295662	Massey Ferguson Connect Basic Package (Verizon) Verizon Cellular Network when using Massey Ferguson Connect	M136367		1,771.00
160-BS019*	7295660	Massey Ferguson Connect Basic Package (GSM) Suggested for Canada and US where Verizon is not preferred when using Massey Ferguson Connect	M136367		1,771.00
*** 5 YEAR SUBSCRIPTION, MUST BE ACTIVATED WITHIN 12 MONTHS OF WARRANTY REGISTRATION**					

(F.O.B. PORT OF ENTRY)

Order Code	Catalog Number	Description	Factory Code	Approx. Weight (lb.)	List Price
PTO					
100-LC001	Base	540 RPM 6 Spline and1000 RPM 21 Spline Exchangeable Shaft with No Economy			**In Base**
100-LC002	7293068	540/540E/1000/1000E Exchangeable Shaft 540 RPM 6 Spline and 1000 RPM 21 Spline with Economy PTO	M76461		993.00
FRONT HITCH					
230-FA000	Base	Less Front Hitch			**In Base**
230-F1132*	7293594	2800 kg Front Linkage w/ 1 Set of Hydraulic Couplers	M526064		6,832.00
***REQUIRES: SUSPENDED FRONT AXLE**					
LOADER PROVISION					
350-LL000	Base	Less Loader Provisions.			**In Base**
350-LL001*	7293445	Front Loader Provision-Multifunctional Mechanical Loader Control, Including Hydraulics and Subframe	M517902		6,726.00
***PLEASE SEE LOADER SECTION FOR LIVE 3RD FUNCTION FIELD INSTALL KIT AS WELL AS MECHANICAL MULTIFUNCTION JOYSTICK FIELD INSTALL KIT.**					
CAB					
365-AF011	7294227	Radio, AM/FM, CD Player and MP3 Compatible	M42350		550.00
125-AE027	7293430	Air Suspended Seat - Automatic Adjustment	M28721		373.00
145-AL032	7295330	Telescopic Wide Angle Mirrors	M28413		369.00
140-AI020	7293077	Standard Cab Roof with Roof Hatch	M21868		284.00
115-AM084	7293559	OptiRide Passive Mechanical Cab Suspension	M141988		1,844.00
FRONT WEIGHTS					
285-YA112	7293487	121 LBS (55 KGS) Front Weights, Set of 12 with Hardware - total Weight 1,455 LBS (660 KGS)	M189343		2,459.00
REAR WHEEL WEIGHTS					
325-RD040	7294192*	551 LBS (250 KGS) Weights, Set of 2 Mounts Externally to Wheel	M146377	1102	1,901.00
325-RD041	7294200	551 lbs. (250 kgs.) Weights, Set of 4 Mounts Externally to Wheel	M292677	2204	3,801.00
		***NOT COMPATIBLE WITH MANUAL ADJUST FLANGE AXLE RIMS**			
BELLY AND HITCH WEIGHTS					
245-YD001	7293374	1 Belly Weight - 584 lbs. (265 kgs.) (For use **WITHOUT** Front 3-Point Hitch)	M122969	584	1,597.00
345-YB003*	7294270	1,874 lbs (850 kg) Monoblock Weight	M281050		3,650.00
***NOT COMPATIBLE WITH FRONT WEIGHTS**					
ELECTRICAL					
215-CB000	Base	Less Engine Block Heater.			**In Base**
215-CB002	7295498	Engine Block Heater - 110 Volt	M17094		222.00
ALTERNATOR					
220-CE019	Base	Twin 120 AMP Alternators.			**In Base**
220-CE020	7293561	175 AMP Alternator. (Not Available with ISOBUS)	(M31647)		(411.00)

(F.O.B. PORT OF ENTRY)

Order Code	Catalog Number	Description	Factory Code	Approx. Weight (lb.)	List Price
LIGHTING					
195	Base	4 Single Bulb Front Worklights, 2 Double Bulb Rear Worklights, Less Mid Mounted Front Worklights			**In Base**
195-A0149	7294329	4 LED Front Worklights, 2 LED Rear Worklights LED Worklights on Front Hood, Handrails and Rear Fenders	M215138		2,794.00
205-VF013	7293103	Dual Roof-Mounted Rotating Beacons, Left and Right (Includes SAE SMV sign)	M41811	1102	543.00
360-VE019	7293476	Extremity Lighting	M62370		810.00
PIVOTING FRONT FENDERS					
155-WE000	Base	Less Pivoting Front Fenders			**In Base**
155-WE110*	7294204	Pivoting Front Fenders - Standard Width	M134750		1,750.00
155-WE111*	7294205	Pivoting Front Fenders - Wide Width	M158928		2,064.00
		*Width depends on tire selection; see Chart Below			

Fender Size		
Standard	**Wide**	**Tire Sizes**
12.6" (320) mm	13.9" (355) mm	320/85R34 (12.4R34)
13.9" (355) mm	14.9" (380) mm	340/85R24 (13.6R24) 340/85R28 (13.6R28)
14.9" (380) mm	16.1" (410) mm	380/85R28 (14.9R28) 380/85R30 (14.9R30) 400/80R24 400/80R28
16.1" (410) mm	18.5" (470) mm	420/85R28 (16.9R28) 440/65R28
18.5" (470) mm	20.4" (520) mm	440/80R28 480/65R28
20.4" (520) mm	24.4" (620) mm	540/65R28

REAR FENDERS					
255-WD012	Base	Rear Fenders without Extensions, 78.74"(2.00 M)			**In Base**
255-WD017	7293107	Wide Fender- 90.55" (2.3 M) with Rear Extension	M106029		1,377.00
255-WD020	7293109	Extra Wide Fender -100.4" (2.55 M) with Rear Extension	M120813		1,569.00

(F.O.B. PORT OF ENTRY)

Order Code	Catalog Number	Description	Factory Code	Approx. Weight (lb.)	List Price
MISCELLANEOUS					
35-EN002	7293402	14:1:1 Super Creeper Reduction Gear	M239855		3,115.00
250-GS001	7293100	Hydraulic Trailer Brakes	M67452		876.00
250-GS067	7293552	Pneumatic & Hydraulic Trailer Brakes	M619465		8,045.00
225-LQ001	7293553	Water Separator (Fuel Filter)	M37345		485.00
275-TC005	7294210	French Language OIB			No Charge
275-TC011	7294211	Spanish Language OIB			No Charge
QUICK HITCH					
	5020455M	Quick Hitch, Category 3/3N (Installed at the Assembly Center)	M177408		2,304.00
DEALER INSTALLED OPTIONS					
FRONT WEIGHTS					
	5020186M	8 x 55kg (121 lbs.) Front Weights	M123739	968	1,607.00
	5020187M	10 x 55kg (121 lbs.) Front Weights	M153230	1210	1,990.00
	5020188M	12 x 55kg (121 lbs.) Front Weights	M189343	1452	2,459.00
	5020189M	14 x 55kg (121 lbs.) Front Weights	M220913	1694	2,869.00
	5020190M	16 x 55kg (121 lbs.) Front Weights	M252483	1936	3,279.00

(F.O.B. PORT OF ENTRY)

Order Code	Catalog Number	Description	Factory Code	Approx. Weight (lb.)	List Price

TIRES for 7715S and 7716S

TIRE BRAND SELECTION

70-Blank	7294212	Factory Brand Choice			No Charge
70-T0001	7294195	Michelin Brand Required	M150150		1,950.00
70-T0007	7294197	Firestone Brand Required	M94633		1,229.00
70-T0010	7294198	Trelleborg Brand Required	M94633		1,229.00
70-T0014	7294250	Nokian Brand Required	M92862		1,206.00

FRONT AND REAR TIRES

		FLANGE AXLE*			
		Rear: Single Pressed Steel Manual Adjust - Set of 2			
		Front: Waffle Wheel			
75-Base	7292864 7294786	Rear: 460/85R38 R1W (MI, FI, TR) Front: 380/85R28 R1W (MI, FI, TR)			**In Base**
75-W1309	7292865 7293763	Rear: 520/85R38 R1W (MI, FI, TR) Front: 420/85R28 R1W (MI, FI, TR)	M114653		1,489.00
		Rear: Single Welded Pressed Steel - Set of 2			
		Front: Fixed Welded Steel Rim			
75-W1478	7292873 7293769	Rear: 540/80R38 (Nokian Industrial) Front: 440/80R28 (Nokian Industrial)	M851466		11,058.00
75-W1258	7292860 7293759	Rear: 650/65R38 R1W (MI, TR) Front: 540/65R28 R1W (MI, TR)	M357280		4,640.00
75-W1299	7292897 7294786	Rear: 460/85R38 R1W (MI, FI, TR) Front: 380/85R28 R1W (MI, FI, TR)	M08470		110.00
75-W1530	7292898 7293763	Rear: 520/85R38 R1W (MI, FI, TR) Front: 420/85R28 R1W (MI, FI, TR)	M114653		1,489.00
		BAR AXLES- SHORT AND LONG			
		Rear: Single Welded Pressed Steel - Set of 2			
		Front: Fixed Welded Steel Rim			
75-W1670	7294899B5 7293757	Rear: 540/65R38 R1W (MI, TR) Front: 440/65R28 R1W (MI, TR)	M62293		809.00
75-W1572	7294894B5 7294785	Rear: 600/65R38 R1W (MI, TR) Front: 480/65R28 R1W (MI, TR)	M109956		1,428.00
75-W1673	7294905B5 7293769	Rear: 540/80R38 (Nokian Industrial) Front: 440/80R28 (Nokian Industrial)	M852236		11,068.00
75-W1262	7294895B5 7293759	Rear: 650/65R38 R1W (MI, TR) Front: 540/65R28 R1W (MI, TR)	M360206		4,678.00

*** FIRESTONE TREAD TYPE IS R1**

(F.O.B. PORT OF ENTRY)

TIRES for 7715S and 7716S

FRONT AND REAR TIRES - CONTINUED

Order Code	Catalog Number	Description	Factory Code	Approx. Weight (lb.)	List Price
		BAR AXLES- SHORT AND LONG			
		Rear: Single Semi Dished Cast Centers- Set of 2			
		Front: Waffle Wheel			
75-W1300	7294897B5 7294786	Rear: 460/85R38 R1W (18.4R38) (MI, FI, TR) Front: 380/85R28 R1W (14.9R28) (MI, FI, TR)	M118426		1,538.00
75-W1318	7294883B5 7293764	Rear: 380/90R46 R1W* (MI) Front: 380/85R30 R1W* (MI)	M236159		3,067.00
75-W1409	7294884B5 7293764	Rear: 420/80R46 R1W* (MI) Front: 380/85R30 R1W* (MI)	M293678		3,814.00
75-W1377	7294882B5 7293764	Rear: 480/80R42 R1W* (MI, TR) Front: 380/85R30 R1W* (MI, TR)	M235851		3,063.00
75-W1384	7294882B5 7293763	Rear: 480/80R42 R1W (MI, TR) Front: 420/85R28 R1W (MI, TR)	M288134		3,742.00
75-W1533	7294893B5 7293763	Rear: 520/85R38 R1W (MI, FI, TR) Front: 420/85R28 R1W (MI, FI, TR)	M343959		4,467.00
		BAR AXLES- LONG			
		Rear: Dual Cast Inner / Steel Outer - Set of 4			
		Front: Waffle Wheel			
75-W1374	7294898B5 7294786	Duals: 460/85R38 R1W (MI, TR, FI) Front: 380/85R28 R1W (MI, TR, FI)	M710094		9,222.00
75-W1379	7294887B5 7293764	Duals: 380/90R46 R1W (MI) Front: 380/85R30 R1W (MI)	M850465		11,045.00
75-W1410	7294888B5 7293764	Duals: 420/80R46 R1W* (MI) Front: 380/85R30 R1W* (MI)	M929852		12,076.00
75-W1380	7294886B5 7293764	Duals: 480/80R42 R1W* (MI, TR) Front: 380/85R30 R1W* (MI, TR)	M790328		10,264.00
75-W1386	7294886B5 7293763	Duals: 480/80R42 R1W (MI, TR) Front: 420/85R28 R1W (MI, TR)	M842611		10,943.00
		Rear: Dual Cast Inner / Cast Outer - Set of 4			
		Front: Waffle Wheel			
75-W1408	7294925B5 7293764	Duals: 380/90R46 R1W (MI) Front: 380/85R30 R1W (MI)	M858935		11,155.00
75-W1412	7294926B5 7293764	Duals: 420/80R46 R1W* (MI) Front: 380/85R30 R1W* (MI)	M938322		12,186.00
75-W1407	7294927B5 7293764	Duals: 480/80R42 R1W* (MI, TR) Front: 380/85R30 R1W* (MI, TR)	M798798		10,374.00
75-W1405	7294927B5 7293763	Duals: 480/80R42 R1W* (MI, TR) Front: 420/85R28 R1W* (MI, TR)	M851081		11,053.00

NOTE: OUTER CAST WHEEL WILL ALLOW FOR 120" TREAD SETTING ON 82MM LONG BAR AXLE

*** FIRESTONE TREAD TYPE IS R1**

(F.O.B. PORT OF ENTRY)

TIRES for 7718S

FRONT AND REAR TIRES

Order Code	Catalog Number	Description	Factory Code	Approx. Weight (lb.)	List Price
		FLANGE AXLE*			
		Rear: Single Pressed Steel Manual Adjust - Set of 2			
		Front: Waffle Wheel			
75-Base	7292864 7293762B2	Rear: 460/85R38 R1W (MI, FI, TR) Front: 380/85R28 R1W (MI, FI, TR)			**In Base**
75-W1309	7292865 7294762B2	Rear: 520/85R38 R1W (MI, FI, TR) Front: 420/85R28 R1W (MI, FI, TR)	M114653		1,489.00
		Rear: Single Welded Pressed Steel - Set of 2			
		Front: Fixed Welded Steel Rim			
75-W1478	7292873 7294791B2	Rear: 540/80R38 (Nokian Industrial) Front: 440/80R28 (Nokian Industrial)	M851466		11,058.00
75-W1258	7292860 7294783B2	Rear: 650/65R38 R1W (MI, TR) Front: 540/65R28 R1W (MI, TR)	M357280		4,640.00
75-W1299	7292897 7293762B2	Rear: 460/85R38 R1W (MI, FI, TR) Front: 380/85R28 R1W (MI, FI, TR)	M08470		110.00
75-W1530	7292898 7294762B2	Rear: 520/85R38 R1W (MI, FI, TR) Front: 420/85R28 R1W (MI, FI, TR)	M114653		1,489.00
		BAR AXLES- SHORT AND LONG			
		Rear: Single Welded Pressed Steel - Set of 2			
		Front: Fixed Welded Steel Rim			
75-W1670	7294899B5 7294784B2	Rear: 540/65R38 R1W (MI,TR) Front: 440/65R28 R1W (MI, TR)	M62293		809.00
75-W1572	7294894B5 7293758B2	Rear: 600/65R38 R1W (MI, TR) Front: 480/65R28 R1W (MI, TR)	M109956		1,428.00
75-W1673	7294905B5 7294791B2	Rear: 540/80R38 (Nokian Industrial) Front: 440/80R28 (Nokian Industrial)	M852236		11,068.00
75-W1262	7294895B5 7294783B2	Rear: 650/65R38 R1W (MI, TR) Front: 540/65R28 R1W (MI, TR)	M360206		4,678.00

*** FIRESTONE TREAD TYPE IS R1**

(F.O.B. PORT OF ENTRY)

Order Code	Catalog Number	Description	Factory Code	Approx. Weight (lb.)	List Price
		TIRES for 7718S			
		BAR AXLES- SHORT AND LONG			
		Rear: Single Semi Dished Cast Centers- Set of 2			
		Front: Waffle Wheel			
75-W1300	7294897B5 7293762B2	Rear: 460/85R38 R1W (18.4R38) (MI, FI, TR) Front: 380/85R28 R1W (14.9R28) (MI, FI, TR)	M118426		1,538.00
75-W1394	7294885B5 7294769B2	Rear: 320/90R50 R1W (MI) Front: 320/85R34 R1W (MI)	M333410		4,330.00
75-W1318	7294883B5 7294765B2	Rear: 380/90R46 R1W* (MI) Front: 380/85R30 R1W* (MI)	M236159		3,067.00
75-W1409	7294884B5 7294765B2	Rear: 420/80R46 R1W* (MI) Front: 380/85R30 R1W* (MI)	M293678		3,814.00
75-W1377	7294882B5 7294765B2	Rear: 480/80R42 R1W* (MI, TR) Front: 380/85R30 R1W* (MI, TR)	M235851		3,063.00
75-W1384	7294882B5 7294762B2	Rear: 480/80R42 R1W (MI, TR) Front: 420/85R28 R1W (MI, TR)	M288134		3,742.00
75-W1533	7294893B5 7294762B2	Rear: 520/85R38 R1W (MI, FI, TR) Front: 420/85R28 R1W (MI, FI, TR)	M343959		4,467.00
		BAR AXLES- LONG			
		Rear: Dual Cast Inner / Steel Outer - Set of 4			
		Front: Waffle Wheel			
75-W1374	7294898B5 7293762B2	Duals: 460/85R38 R1W (MI, TR) Front: 380/85R28 R1W (MI, TR)	M710094		9,222.00
75-W1395	7294889B5 7294769B2	Duals: 320/90R50 R1W (MI) Front: 320/85R34 R1W (MI)	M333410		4,330.00
75-W1379	7294887B5 7294765B2	Duals: 380/90R46 R1W (MI) Front: 380/85R30 R1W (MI)	M850465		11,045.00
75-W1410	7294888B5 7294765B2	Duals: 420/80R46 R1W* (MI, FI) Front: 380/85R30 R1W* (MI, FI)	M929852		12,076.00
75-W1380	7294886B5 7294765B2	Duals: 480/80R42 R1W* (MI, TR, FI) Front: 380/85R30 R1W* (MI, TR, FI)	M790328		10,264.00
75-W1386	7294886B5 7294762B2	Duals: 480/80R42 R1W (MI, TR) Front: 420/85R28 R1W (MI, TR)	M842611		10,943.00
		Rear: Dual Cast Inner / Cast Outer - Set of 4			
		Front: Waffle Wheel			
75-W1408	7294925B5 7294765B2	Duals: 380/90R46 R1W (MI) Front: 380/85R30 R1W (MI)	M858935		11,155.00
75-W1412	7294926B5 7294765B2	Duals: 420/80R46 R1W* (MI) Front: 380/85R30 R1W* (MI)	M938322		12,186.00
75-W1407	7294927B5 7294765B2	Duals: 480/80R42 R1W* (MI, TR) Front: 380/85R30 R1W* (MI, TR)	M798798		10,374.00
75-W1405	7294927B5 7294762B2	Duals: 480/80R42 R1W* (MI, TR) Front: 420/85R28 R1W* (MI, TR)	M851081		11,053.00

NOTE: OUTER CAST WHEEL WILL ALLOW FOR 120" TREAD SETTING ON 82MM LONG BAR AXLE

*** FIRESTONE TREAD TYPE IS R1**

7700S SMALL FRAME DELUXE EDITION

MASSEY FERGUSON®

(F.O.B. PORT OF ENTRY)

DELUXE EDITION FEATURES

ENGINE
7715S/7716S/7718S
7715S: 140 Rated Engine HP, 120 PTO HP, 150 Max Engine HP
7716S: 150 Rated Engine HP, 125 PTO HP, 160 Max Engine HP
7718S: 165 Rated Engine HP, 135 PTO HP, 175 Max Engine HP
Rated Engine Power @ 2100 RPM

AGCO POWER™ 6.6L (403 cu in.) 6 Cylinder, Tier 4f Compliant
- SCR Technology
- Air-to-Air Aftercooled, Common Rail Injection, Turbocharged

Electronic Engine Management (EEM) with Dual ERPM Settings
Electronic Controlled Viscous Fan Drive
Dual Element Dry Type Air Cleaner
Vertical Exhaust at Right Front Cab Post
Cooling System: Antifreeze to Minus 30F (-34°C)
Fuel Tank Capacity: 82 Gal (310L)
DEF Tank Capacity: 8 Gal (30L)

POWERTRAIN
7715S/7716S/7718S: Dyna-VT
- Continuously Variable Transmission, 60 ft/h to 25 MPH (18.2 Meters/h to 40 KPH)
- Dynamic Tractor Management (DTM) with Two Programmable Cruise Speeds
- Short Bar Rear Axle, 90 In. (2277mm) Long, 3.74 in. (95mm) Diameter

7715S/7716S/7718S: Dyna-6 Transmission
- 24F/24R Semi-Powershift, 4 Ranges with 6 Powershifts per Range 40kph (25 mph)
- Dynamic Tractor Management (DTM) with Two Programmable Cruise Speeds
- Short Bar Rear Axle, 80 In. (2028mm) Long, 3.23 In (82mm) Diameter

Multi-Disc Wet Brakes
Power Differential Lock
Independent PTO:
Dyna-VT: 540/540E/1000/1000E RPM Flanged Shaft, 540 with 6 Spline and 1000 with 21 Spline
Dyna-6: 540/540E/1000/1000E Exchangeable Shaft, 540 with 6 Spline and 1000 with 21 Spline with Electric Control
Rear Fender Mounted PTO Shut-Off
SV1 & SV2 Settings

FRONT WHEEL ASSIST AXLE
Power Front Axle (PFA)
- 8 Bolt Pattern: 7715S/7716S Dyna-6 and Dyna-VT
- 10 Bolt Pattern: 7718S Dyna-6 and Dyna-VT

Shielded Center Drive Line with Electro-Hydraulic Control & Front Wheel Drive Differential Lock
55 Degree Steering Angle

HYDRAULICS
Closed Center Load Sensing 29 gpm (110 L/Min) Pump
2900 PSI (200 Bar) Maximum Pressure
2 Electric Valves - Fingertip Controlled on Armrest,
2 Mechanical Valves – Lever Controlled on Right Hand Console
Hydrostatic Power Steering
Fender Control for One Valve

HITCH
3 Point Hitch: Category 2/3 Linkage Ball Ends
- Active Transport Control
- Lower Link Sensing
- Electronic Draft Control, Electronic Height Control and Rate of Drop
- Variable Float Telescopic Stabilizers
- Left and Right Side External 3 Point Control

Drawbar: Category 2, Clevis and Drop Pin

ELECTRICAL SYSTEM
Twin 120 AMP Alternators
2 – 12V Batteries, 600 CCA Each (SAE)
7 Pin ASAE Rear Trailer Electrical Outlet
Electrical Isolator Switch and Jumpstart Point
Ignition with Neutral Start and Key Shutoff

LIGHTING
8 Front Hood Mounted Lights
Four Front Single Bulb Worklights
Two Rear Double Bulb Worklights
Two Field Lights on Hand Rails and Rear Fenders with Taillights, Flashing Warning Lights, and Turn Signals

INSTRUMENTS
Setup and Information Screen (SIS)
C1000 (Tractor Functions and Video) + FieldStar 5 (Isobus & Massey Ferguson Guide)
Tachometer: Digital and Analog
PTO Speed: Digital
Ground Speed Display: Digital
Fuel Level, DEF Level, and Coolant Temp Gauges
Warning/Information Lights

OPERATOR AREA
Instructor Seat with Seat Belt
6 Post Cab
Transmission Control T-Handle on Armrest
Adjustable Steering Column with SpeedSteer
Front Sun Visor
Air Conditioning and Heater
Air Suspended Seat
Front and Rear Windshield Wiper/Washer
Dual Wide Angle Telescoping Outside Rear View Mirrors
Single Inside Rear View Mirror
Antenna and Speakers (Less Radio)
Two sets of 3 Pin 12V Power Outlet
12V Cigarette Lighter Style Power Outlet
ISO 11783 9-Pin in Cab Connector
ISO 11786 7-Pin in Cab Connector

WHEELS AND TIRES
Rear 460/85R38 R1W Single Wheels
Front 380/85R28 R1W Single Waffle Wheels

OTHER STANDARD FEATURES
Massey Ferguson Guide Ready (Verizon)
Massey Ferguson Connect Ready
TaskDoc
Lockable Tool Box
SMV Sign
Molded Rear Fenders
English Literature

(F.O.B. PORT OF ENTRY)

Order Code	Catalog Number	Description	Factory Code	Approx. Weight (lb.)	List Price

ONE *ORDER CODE* FROM EACH GROUP MUST BE SPECIFIED. (Unless In Base Option is desired)

BASE MACHINE

DYNA-6 EDITIONS-- Beauvais Built

MF7715S~D6~EF~07	7295641	Massey 7715S Deluxe Tractor 120 PTO HP	M13583339		176,407.00
MF7716S~D6~EF~07	7295642	Massey 7716S Deluxe Tractor 125 PTO HP	M13846987		179,831.00
MF7718S~D6~EF~07	7295643	Massey 7718S Deluxe Tractor 135 PTO HP	M14716394		191,122.00

DYNA-VT EDITIONS-- Beauvais Built

MF7715S~DV~EF~07	7295644	Massey 7715S Deluxe Tractor 120 PTO HP	M14307139		185,807.00
MF7716S~DV~EF~07	7295645	Massey 7716S Deluxe Tractor 125 PTO HP	M14570787		189,231.00
MF7718S~DV~EF~07	7295646	Massey 7718S Deluxe Tractor 135 PTO HP	M15440194		200,522.00

MARKETING PACKAGES

320-MLP8012	7295472	Deluxe Comfort Package, Includes:	M244783		3,179.00
		Radio, AM/FM, CD Player and MP3 Compatible (AF011)			
		Telescopic Wide Angle Mirrors with Electric De-Icing & Adjustment (AL033)			
		Passive Mechanical Suspension (AM084)			
		Automatic Climate Control (AQ004)			
320-MLP8013	7295474	Premium Comfort Package, Includes:	M562408		7,304.00
		Superluxe Grammar Seat (AE042)			
		Radio, AM/FM, CD Player and MP3 Compatible (AF011)			
		Telescopic Wide Angle Mirrors with Electric De-Icing & Adjustment (AL033)			
		OptiRide Active Mechanical Cab Suspension (AM117)			
		Automatic Climate Control (AQ004)			
		4 LED Front Worklights, 2 LED Rear Worklights (A0149)			
		LED Worklights on Front Hood, Handrails and Rear Fenders			

(F.O.B. PORT OF ENTRY)

Order Code	Catalog Number	Description	Factory Code	Approx. Weight (lb.)	List Price
TRANSMISSION OPTIONS FOR DYNA-6 EDITIONS					
FOR MF7715S AND MF7716S					
25-EA655	Base	6x4 Dyna-6 Transmission with 24F/24R gears . . . . 25 MPH (40 KPH) with Dynamic Tractor Management (DTM) Includes: Non-Suspended Power Front Axle & Power Assisted Main Brakes			**In Base**
25-NA032	7295476	6x4 Dyna-6 Transmission with 24F/24R gears . . . . M563563 25 MPH (40 KPH) with Dynamic Tractor Management (DTM) Includes: Suspended Power Front Axle			7,319.00
25-G1061	7295181	6X4 Dyna-6 Transmission with 24F/24R gears. . . . M807345 31 MPH (50 KPH) with Dynamic Tractor Management (DTM). Includes: Suspended Power Front Axle & High Capacity Power Assist Brakes			10,485.00
FOR MF7718S					
25-EA655	Base	6x4 Dyna-6 Transmission with 24F/24R gears . . . . 25 MPH (40 KPH) with Dynamic Tractor Management (DTM) Includes: Non-Suspended Power Front Axle & Power Assisted Main Brakes			**In Base**
25-NA032	7295477	6x4 Dyna-6 Transmission with 24F/24R gears . . . . M563563 25 MPH (40 KPH) with Dynamic Tractor Management (DTM) Includes: Suspended Power Front Axle			7,319.00
25-G1061	7295183	6X4 Dyna-6 Transmission with 24F/24R gears. . . . M807345 31 MPH (50 KPH) with Dynamic Tractor Management (DTM). Includes: Suspended Power Front Axle & High Capacity Power Assist Brakes			10,485.00
TRANSMISSION OPTIONS FOR DYNA-VT EDITIONS					
FOR MF7715S AND MF7716S					
25-EA621	Base	Dyna-VT Transmission - 25 MPH (40 KPH) . . . . . Includes: Non-Suspended Power Front Axle & Power Assisted Main Brakes			**In Base**
25-A7024	7295478	Dyna-VT Transmission - 31 MPH (50 KPH) . . . . . M516824 Includes: Suspended Power Front Axle & High Capacity Power Assist Brakes			6,712.00
FOR MF7718S					
25-EA621	Base	Dyna-VT Transmission - 25 MPH (40 KPH) . . . . . Includes: Non-Suspended Power Front Axle & Power Assisted Main Brakes			**In Base**
25-A7024	7295479	Dyna-VT Transmission - 31 MPH (50 KPH) . . . . . M516824 Includes: Suspended Power Front Axle & High Capacity Power Assist Brakes			6,712.00
ARMREST CONTROL					
30-EC021	Base	"T" Lever Control on Armrest			**In Base**
30-EC022	7295276	Power Control Shuttle - MultiPad Lever on Armrest . M93016			1,208.00

(F.O.B. PORT OF ENTRY)

Order Code	Catalog Number	Description	Factory Code	Approx. Weight (lb.)	List Price
AUXILIARY HYDRAULIC FLOW					
370-DP110	Base	29 gpm (110 L/min) Closed Center Load Sensing (CCLS) System			**In Base**
370-DP190	7293697	50 gpm (190 L/min) Closed Center Load Sensing (CCLS) System (Only Available for Dyna-VT Models)	M197659		2,567.00
AUXILIARY VALVE 1 & 2					
50-KX011	Base	Valves 1 and 2 Electric, Fingertip Controlled Spool Valves Fingertips Located in Armrest			**In Base**
50-KX012	7293530	Valves 1 & 2 Electric with Multifunction Joystick on the Armrest (Required when Choosing Factory Installed Loader Provisions (LL004 & LL005))	M107261		1,393.00
TO UTILIZE THE FACTORY INSTALLED MULTIFUNCTION JOYSTICK WITH A LOADER, THE TRACTOR MUST BE EQUIPPED WITH THE LOADER PROVISIONS FROM THE FACTORY.					
AUXILIARY VALVE 3 & 4					
55-MU003	Base	3rd Valve only, Mechanically Controlled. with lever located in Right Hand Console Kickout, Zero Leak, Flow Dividing, Float			**In Base**
55-MU012	7293531	3rd and 4th Mechanically Controlled Valves, with levers located in Right Hand Console Kickout, Zero Leak, Flow Dividing, Float	M94633		1,229.00
55-MU031	7295487	3rd and 4th Electric, Fingertip Controlled Valves with Fingertips located on Right Hand Console	M109802		1,426.00
55-MU041	7295488	3rd, 4th & 5th Fingertip Controlled Electric Spool Valve. (Fingertips located on Right Hand Console) **DYNA-VT MODELS**	M147994		1,922.00
POWER BEYOND					
90-GR000	Base	Less Power Beyond			**In Base**
90-GR010	7295153	Power Beyond Couplers P/T/LS/D	M59598		774.00
REAR AXLE					
DYNA-6					
60-EE402	Base	Short Bar Rear Axle, 80 in. (2028mm) Long, 3.23 in (82mm) Diameter			**In Base**
60-EE404	7293026	Long Bar Rear Axle, 3.23 in (82mm) Diameter, 105 in (2672mm) Long (Requires Extremity Lights VE019)	M76384		992.00
DYNA-VT					
60-EE402	Base	Short Bar Rear Axle, 90 in. (2277mm) Long, 3.74 in. (95mm) Diameter			**In Base**
60-EE404	7293131	Long Bar Rear Axle, 118 in. (2997mm) long, 3.74 in. (95mm) Diameter (Requires Extremity Lights VE019)	M76384		992.00
REAR 3-POINT HITCH					
85-GC009	Base	Category 2/3 Telescopic Ball End Links			**In Base**
85-GC025	7293405	Category 3 Hook End Links, with Hook Style Links and Cat 3/3 and Cat 2/3 Balls and Cones.	M09471		123.00

7700S SMALL FRAME DELUXE EDITION

MASSEY FERGUSON®

(F.O.B. PORT OF ENTRY)

Order Code	Catalog Number	Description	Factory Code	Approx. Weight (lb.)	List Price
INSTRUMENT PANEL					
175-BA053	7295355	C1000 (Tractor Functions and Video) + FieldStar 5 (Isobus & Massey Ferguson Guide) All XR options available			**In Base**
175-BA051	7295450	FieldStar 5 (Isobus and Massey Ferguson Guide) All XR options available	(M06160)		(80.00)
175-BA024	7295351	C1000 (Tractor Functions and Video)	(M160160)		(2,080.00)
175-BA003	7295449	System Information Screen with Radar (For Actual Ground Speed and Slip Control)	(M570108)		(7,404.00)
175-BA005	7295448	System Information Screen	(M634788)		(8,244.00)
MASSEY FERGUSON GUIDE					
BA053 IS NEEDED FOR MF GUIDE					
300-XR341*	7295653**	Massey Ferguson Guide Ready Package (Verizon) Verizon Cellular Network when using NTRIP and Task Doc Pro			**In Base**
300-XR000	7295649	Less Massey Ferguson Guide (Requires Less SpeedSteer)	(M346500)		(4,500.00)
300-XR342*	7295654	Massey Ferguson Guide Standard (Verizon) with Novatel Smart7 Receiver Pass-to-Pass Accuracy of +/- 20 cm (+/- 8 inch) For correction signal WAAS (no subscription needed)	M211750		2,750.00
300-XR346*	7295655	Massey Ferguson Guide Standard (Verizon) Trimble® AG-382 Receiver Pass-to-Pass Accuracy of +/- 20 cm (+/- 8 inch) For correction signal WAAS (no subscription needed)	M273350		3,550.00
300-XR301*	7295650**	Massey Ferguson Guide Ready Package (GSM) Suggested for Canada and US where Verizon is not preferred when using NTRIP and Task Doc Pro			No Charge
300-XR302*	7295651	Massey Ferguson Guide Standard (GSM) with Novatel Smart7 Receiver Pass-to-Pass Accuracy of +/- 20 cm (+/- 8 inch) For correction signal WAAS (no subscription needed)	M211750		2,750.00
300-XR306*	7295652	Massey Ferguson Guide Standard (GSM) Trimble® AG-382 Receiver Pass-to-Pass Accuracy of +/- 20 cm (+/- 8 inch) For correction signal WAAS (no subscription needed)	M273350		3,550.00

***REQUIRES SPEEDSTEER AD004**

****TO COMPLETE MF GUIDE, ORDER FIELDSTAR 5 AND MF GUIDE RECEIVER FROM PARTS**

SPEEDSTEER					
185-AD004	Base	SpeedSteer Option Mandatory with Massey Ferguson Guide Ready Not Compatible with Less Massey Ferguson Guide- XR000			**In Base**
185-AD002	7293558	Less SpeedSteer	(M202510)		(2,630.00)
TELEMETRY					
160-BS002	Base	Massey Ferguson Connect Ready			**In Base**
160-BS119*	7295662	Massey Ferguson Connect Basic Package (Verizon) Verizon Cellular Network when using Massey Ferguson Connect	M136367		1,771.00
160-BS019*	7295660	Massey Ferguson Connect Basic Package (GSM) Suggested for Canada and US where Verizon is not preferred when using Massey Ferguson Connect	M136367		1,771.00

*** 5 YEAR SUBSCRIPTION, MUST BE ACTIVATED WITHIN 12 MONTHS OF WARRANTY REGISTRATION**

(F.O.B. PORT OF ENTRY)

Order Code	Catalog Number	Description	Factory Code	Approx. Weight (lb.)	List Price
PTO					
DYNA-6					
100-LC002	Base	540/540E/1000/1000E Exchangeable Shaft . . . . . 540 RPM 6 Spline and 1000 RPM 21 Spline with Economy PTO			**In Base**
100-LC001	7295659	540 RPM 6 Spline and1000 RPM 21 Spline . . . . . Exchangeable Shaft with No Economy	(M76461)		(993.00)
DYNA-VT					
100-Base	Base	540/540E/1000/1000E RPM Flanged PTO with one 6 Spline Shaft and one 21 Spline Shaft, with In-Cab Controls			**In Base**
FRONT HITCH					
230-FA000	Base	Less Front Hitch			**In Base**
230-F1132**	7293594	2800 kg Front Linkage w/ 1 Set of Hydraulic Couplers .	M526064		6,832.00
230-F1143**	7295195*	2800 kg Front Linkage, Double Acting Cylinders . . . . with 2 Sets of Front Hydraulic Couplers with Pressure Drain	M408716		5,308.00
		***REQUIRES LL000 LESS LOADER PROVISIONS**			
		****REQUIRES: SUSPENDED FRONT AXLE**			
LOADER PROVISION					
350-LL000	Base	Less Loader Provisions.			**In Base**
350-LL004	7293484	Front Loader Provisions including Hydraulics, Subframe **Requires: Valves 1 and 2 Electric with a Joystick (KX012)**	M497420		6,460.00
350-LL005	7295249	Front Loader Provision w/ Live 3rd-SMS Loader Control **Requires: Valves 1 and 2 Electric with a Joystick (KX012) and Less Front Hitch**	M606606		7,878.00
TO UTILIZE THE FACTORY INSTALLED MULTIFUNCTION JOYSTICK WITH A LOADER, THE TRACTOR MUST BE EQUIPPED WITH THE LOADER PROVISIONS FROM THE FACTORY.					
RADIO					
365-AF001	Base	Antenna and Speakers (Less Radio)			**In Base**
365-AF011	7294227	Radio, AM/FM, CD Player and MP3 Compatible	M42350		550.00
CAB					
115-AM084	7293559	OptiRide Passive Mechanical Cab Suspension	M141988		1,844.00
115-AM117	7295248	OptiRide Active Mechanical Suspension	M249711		3,243.00
125-AE042	7293546	Superluxe Grammar Seat	M147840		1,920.00
145-AL033	7295497	Telescopic Wide Angle Mirrors with Electric De-Icing . . And Adjustment	M47047		611.00
120-AQ004	7293082	Automatic Climate Control	M89474		1,162.00
140-AI020	7293077	Standard Cab Roof with Roof Hatch	M21868		284.00

(F.O.B. PORT OF ENTRY)

Order Code	Catalog Number	Description	Factory Code	Approx. Weight (lb.)	List Price
FRONT WEIGHTS					
285-YA112	7293487	121 LBS (55 KGS) Front Weights, Set of 12 with Hardware - total Weight 1,455 LBS (660 KGS)	M189343		2,459.00
REAR WHEEL WEIGHTS					
325-RD040	7294192*	551 LBS (250 KGS) Weights, Set of 2 Mounts Externally to Wheel	M146377	1102	1,901.00
325-RD041	7294200	551 lbs. (250 kgs.) Weights, Set of 4 Mounts Externally to Wheel	M292677	2204	3,801.00
		***NOT COMPATIBLE WITH MANUAL ADJUST FLANGE AXLE RIMS**			
BELLY AND HITCH WEIGHTS					
245-YD001	7293374	1 Belly Weight - 584 LBS (265 KGS) (For use **WITHOUT** Front 3-Point Hitch)	M122969	584	1,597.00
345-YB003*	7294270	1,874 lbs (850 kg) Monoblock Weight	M281050		3,650.00
***NOT COMPATIBLE WITH FRONT WEIGHTS**					
ELECTRICAL					
215-CB000	Base	Less Engine Block Heater			**In Base**
215-CB002	7295498	Engine Block Heater - 110 Volt	M17094		222.00
ALTERNATOR					
220-CE019	Base	Twin 120 AMP Alternators.			**In Base**
220-CE020	7293561	175 AMP Alternator. (Not Available with ISOBUS)	(M31647)		(411.00)
LIGHTING					
195	Base	4 Single Bulb Front Worklights, 2 Double Bulb Rear Worklights, Less Mid Mounted Front Worklights			**In Base**
195-A0149	7294329	4 LED Front Worklights, 2 LED Rear Worklights LED Worklights on Front Hood, Handrails and Rear Fenders	M215138		2,794.00
205-VF013	7293103	Dual Roof-Mounted Rotating Beacons, Left and Right (Includes SAE SMV sign)	M41811	1102	543.00
360-VE019	7293476	Extremity Lighting	M62370		810.00

(F.O.B. PORT OF ENTRY)

Order Code	Catalog Number	Description	Factory Code	Approx. Weight (lb.)	List Price
PIVOTING FRONT FENDERS					
155-WE000	Base	Less Pivoting Front Fenders			**In Base**
155-WE110*	7294204	Pivoting Front Fenders - Standard Width	M134750		1,750.00
155-WE111*	7294205	Pivoting Front Fenders - Wide Width	M158928		2,064.00
		*Width depends on tire selection; see Chart Below			

Fender Size		
Standard	**Wide**	**Tire Sizes**
12.6" (320) mm	13.9" (355) mm	320/85R34 (12.4R34)
13.9" (355) mm	14.9" (380) mm	340/85R24 (13.6R24) 340/85R28 (13.6R28)
14.9" (380) mm	16.1" (410) mm	380/85R28 (14.9R28) 380/85R30 (14.9R30) 400/80R24 400/80R28
16.1" (410) mm	18.5" (470) mm	420/85R28 (16.9R28) 440/65R28
18.5" (470) mm	20.4" (520) mm	440/80R28 480/65R28
20.4" (520) mm	24.4" (620) mm	540/65R28

REAR FENDERS					
255-WD012	Base	Rear Fenders without Extensions, 78.74"(2.00 M) . . .			**In Base**
255-WD017	7293107	Wide Fender -90.55" (2.3 M) with Rear Extension . . .	M106029		1,377.00
255-WD020	7293109	Extra Wide Fender -100.4" (2.55 M) with Rear Extension	M120813		1,569.00

(F.O.B. PORT OF ENTRY)

Order Code	Catalog Number	Description	Factory Code	Approx. Weight (lb.)	List Price
MISCELLANEOUS					
35-EN002	7293402	14:1:1 Super Creeper Reduction Gear . . . . . (**Available on Dyna-6 Editions Only)** Requires: Less Front Hitch (FA000) and Suspended Front Axle	M239855		3,115.00
250-GS001	7293100	Hydraulic Trailer Brakes	M67452		876.00
250-GS067	7293552	Pneumatic & Hydraulic Trailer Brakes.	M619465		8,045.00
225-LQ001	7293553	Water Separator (Fuel Filter)	M37345		485.00
275-TC005	7294210	French Language OIB.			No Charge
275-TC011	7294211	Spanish Language OIB			No Charge
QUICK HITCH					
	5020455M	Quick Hitch, Category 3/3N . . . . . (Installed at the Assembly Center)	M177408		2,304.00
DEALER INSTALLED OPTIONS					
FRONT WEIGHTS					
	5020186M	8 x 55kg (121 lbs.) Front Weights	M123739	968	1,607.00
	5020187M	10 x 55kg (121 lbs.) Front Weights	M153230	1210	1,990.00
	5020188M	12 x 55kg (121 lbs.) Front Weights	M189343	1452	2,459.00
	5020189M	14 x 55kg (121 lbs.) Front Weights	M220913	1694	2,869.00
	5020190M	16 x 55 kg (121 lbs.) Front Weights	M252483	1936	3,279.00
TIRE BRAND SELECTION					
70-Blank	7294212	Factory Brand Choice			No Charge
70-T0001	7294195	Michelin Brand Required	M150150		1,950.00
70-T0007	7294197	Firestone Brand Required.	M94633		1,229.00
70-T0010	7294198	Trelleborg Brand Required	M94633		1,229.00
70-T0014	7294250	Nokian Brand Required	M92862		1,206.00
FRONT AND REAR TIRES					
		BAR AXLES- SHORT AND LONG			
		Rear: Single Welded Pressed Steel - Set of 2 ***Front: Fixed Welded Steel Rim***			
75-W1670	7294899B4 7293757	Rear: 540/65R38 R1W (MI, TR) . . . . . Front: 440/65R28 R1W (MI, TR)	(M52360)		(680.00)
75-W1572	7294894B4 7294785	Rear: 600/65R38 R1W (MI, TR) . . . . . Front: 480/65R28 R1W (MI, TR)	(M05852)		(76.00)
75-W1673	7294905B4 7293769	Rear: 540/80R38 (Nokian Industrial). . . . . Front: 440/80R28 (Nokian Industrial)	M729960		9,480.00
75-W1262	7294895B4 7293759	Rear: 650/65R38 R1W (MI, TR) . . . . . Front: 540/65R28 R1W (MI, TR)	M240856		3,128.00

(F.O.B. PORT OF ENTRY)

Order Code	Catalog Number	Description	Factory Code	Approx. Weight (lb.)	List Price

TIRES for 7715S and 7716S

FRONT AND REAR TIRES - CONTINUED

		BAR AXLES- SHORT AND LONG			
		Rear: Single Semi Dished Cast Centers- Set of 2			
		Front: Waffle Wheel			
75-Base	7294897B4 7294786	Rear: 460/85R38 R1W (18.4R38) (MI, FI, TR) Front: 380/85R28 R1W (14.9R28) (MI, FI, TR)			**In Base**
75-W1533	7294893B4 7293763	Rear: 520/85R38 R1W (MI, FI, TR) Front: 420/85R28 R1W (MI, FI, TR)	M224070		2,910.00
75-W1377	7294882B4 7293764	Rear: 480/80R42 R1W* (MI, TR) Front: 380/85R30 R1W* (MI, TR)	M116501		1,513.00
75-W1318	7294883B4 7293764	Rear: 380/90R46 R1W* (MI) Front: 380/85R30 R1W* (MI)	M116886		1,518.00
75-W1384	7294882B4 7293763	Rear: 480/80R42 R1W (MI, TR) Front: 420/85R28 R1W (MI, TR)	M168784		2,192.00
75-W1409	7294884B4 7293764	Rear: 420/80R46 R1W* (MI) Front: 380/85R30 R1W* (MI)	M173712		2,256.00
		BAR AXLES- LONG			
		Rear: Dual Cast Inner / Steel Outer - Set of 4			
		Front: Waffle Wheel			
75-W1374	7294898B4 7294786	Duals: 460/85R38 R1W (MI, TR, FI) Front: 380/85R28 R1W (MI, TR, FI)	M586047		7,611.00
75-W1379	7294887B4 7293764	Duals: 380/90R46 R1W (MI) Front: 380/85R30 R1W (MI)	M725109		9,417.00
75-W1380	7294886B4 7293764	Duals: 480/80R42 R1W* (MI, TR) Front: 380/85R30 R1W* (MI, TR)	M665511		8,643.00
75-W1386	7294886B4 7293763	Duals: 480/80R42 R1W (MI, TR) Front: 420/85R28 R1W (MI, TR)	M717794		9,322.00
75-W1410	7294888B4 7293764	Duals: 420/80R46 R1W* (MI) Front: 380/85R30 R1W* (MI)	M803726		10,438.00
		Rear: Dual Cast Inner / Cast Outer - Set of 4			
		Front: Waffle Wheel			
75-W1408	7294925B4 7293764	Duals: 380/90R46 R1W (MI) Front: 380/85R30 R1W (MI)	M733502		9,526.00
75-W1412	7294926B4 7293764	Duals: 420/80R46 R1W* (MI) Front: 380/85R30 R1W* (MI)	M812119		10,547.00
75-W1407	7294927B4 7293764	Duals: 480/80R42 R1W* (MI, TR) Front: 380/85R30 R1W* (MI, TR)	M673904		8,752.00
75-W1405	7294927B4 7293763	Duals: 480/80R42 R1W (MI, TR) Front: 420/85R28 R1W (MI, TR)	M726187		9,431.00

NOTE: OUTER CAST WHEEL WILL ALLOW FOR 120" TREAD SETTING ON 82MM LONG BAR AXLE

*** FIRESTONE TREAD TYPE IS R1**

(F.O.B. PORT OF ENTRY)

Order Code	Catalog Number	Description	Factory Code	Approx. Weight (lb.)	List Price

TIRES for 7718S

FRONT AND REAR TIRES

		BAR AXLES- SHORT AND LONG			
		Rear: Single Welded Pressed Steel - Set of 2			
		Front: Fixed Welded Steel Rim			
75-W1670	7294899B4 7294784B2	Rear: 540/65R38 R1W (MI, TR) Front: 440/65R28 R1W (MI, TR)	(M52360)		(680.00)
75-W1572	7294894B4 7293758B2	Rear: 600/65R38 R1W (MI, FI, TR) Front: 480/65R28 R1W (MI, FI, TR)	(M05852)		(76.00)
75-W1673	7294905B4 7294791B2	Rear: 540/80R38 (Nokian Industrial) Front: 440/80R28 (Nokian Industrial)	M729960		9,480.00
75-W1262	7294895B4 7294783B2	Rear: 650/65R38 R1W (MI, TR) Front: 540/65R28 R1W (MI, TR)	M240856		3,128.00
		Rear: Single Semi Dished Cast Centers- Set of 2			
		Front: Waffle Wheel			
75-Base	7294897B4 7293762B2	Rear: 460/85R38 R1W (18.4R38) (MI, FI, TR) Front: 380/85R28 R1W (14.9R28) (MI, FI, TR)			**In Base**
75-W1533	7294893B4 7294762B2	Rear: 520/85R38 R1W (MI, FI, TR) Front: 380/85R28 R1W (MI, FI, TR)	M224070		2,910.00
75-W1394	7294885B4 7294769B2	Rear: 320/90R50 R1W (MI) Front: 320/85R34 R1W (MI)	M130207		1,691.00
75-W1377	7294882B4 7294765B2	Rear: 480/80R42 R1W* (MI, TR) Front: 380/85R30 R1W* (MI, TR)	M116501		1,513.00
75-W1318	7294883B4 7294765B2	Rear: 380/90R46 R1W* (MI) Front: 380/85R30 R1W* (MI)	M116886		1,518.00
75-W1384	7294882B4 7294762B2	Rear: 480/80R42 R1W (MI, TR) Front: 420/85R28 R1W (MI, TR)	M168784		2,192.00
75-W1409	7294884B4 7294765B2	Rear: 420/80R46 R1W* (MI) Front: 380/85R30 R1W* (MI)	M173712		2,256.00
		BAR AXLES- LONG			
		Rear: Dual Cast Inner / Steel Outer - Set of 4			
		Front: Waffle Wheel			
75-W1374	7294898B4 7293762B2	Duals: 460/85R38 R1W (MI, TR, FI) Front: 380/85R28 R1W (MI, TR, FI)	M586047		7,611.00
75-W1379	7294887B4 7294765B2	Duals: 380/90R46 R1W (MI) Front: 380/85R30 R1W (MI)	M725109		9,417.00
75-W1380	7294886B4 7294765B2	Duals: 480/80R42 R1W* (MI, TR) Front: 380/85R30 R1W* (MI, TR)	M665511		8,643.00
75-W1386	7294886B4 7294762B2	Duals: 480/80R42 R1W (MI, TR) Front: 420/85R28 R1W (MI, TR)	M717794		9,322.00
75-W1410	7294888B4 7294765B2	Duals: 420/80R46 R1W* (MI) Front: 380/85R30 R1W* (MI)	M803726		10,438.00
75-W1395	7294889B4 7294769B2	Duals: 320/90R50 R1W (MI) Front: 320/85R34 R1W (MI)	M807037		10,481.00
		Rear: Dual Cast Inner / Cast Outer - Set of 4			
		Front: Waffle Wheel			
75-W1408	7294925B4 7294765B2	Duals: 380/90R46 R1W (MI) Front: 380/85R30 R1W (MI)	M733502		9,526.00
75-W1412	7294926B4 7294765B2	Duals: 420/80R46 R1W* (MI) Front: 380/85R30 R1W* (MI)	M812119		10,547.00
75-W1407	7294927B4 7294765B2	Duals: 480/80R42 R1W* (MI, TR) Front: 380/85R30 R1W* (MI, TR)	M673904		8,752.00
75-W1405	7294927B4 7294762B2	Duals: 480/80R42 R1W (MI, TR) Front: 420/85R28 R1W (MI, TR)	M726187		9,431.00

NOTE: OUTER CAST WHEEL WILL ALLOW FOR 120" TREAD SETTING ON 82MM LONG BAR AXLE

*** FIRESTONE TREAD TYPE IS R1**

MASSEY FERGUSON®

7720S / 7722S / 7724S / 7726S SERIES

HIGH HORSEPOWER

7700S LARGE FRAME CLASSIC EDITION

MASSEY FERGUSON®

(F.O.B. PORT OF ENTRY)

CLASSIC EDITION FEATURES

ENGINE

7720S

7720S: 185 Rated Engine HP, 155 PTO HP, 200 Max Engine HP
Rated Engine HP @ 2100 RPM

AP66-4: AGCO POWER™ 6.6L (402 cu in.) 6 Cylinder, Tier 4f Compliant

- SCR Technology
- Air-to-Air Aftercooled, Common Rail Injection eWastegate Turbocharged

7722S / 7724S / 7726S

7722S: 200 Rated Engine HP, 165 PTO HP, 215 Max Engine HP
7724S: 220 Rated Engine HP, 180 PTO HP, 235 Max Engine HP
7726S: 240 Rated Engine HP, 200 PTO HP, 255 Max Engine HP
Rated Engine HP @ 2100 RPM

AP74-4: AGCO POWER™ 7.4L (452 cu in.) 6 Cylinder, Tier 4f Compliant

- SCR Technology
- Air-to-Air Aftercooled, Common Rail Injection, Turbocharged

Electronic Engine Management (EEM) EPM (Engine Power Management) and 2 Engine RPM Pre-sets
Electronic Controlled Viscous Fan Drive
Dual Element Dry Type Air Cleaner
Vertical Exhaust at Right Front Cab Post
Cooling System: Antifreeze to Minus 30F (-34C)
Fuel Tank Capacity: 114 Gal (430)
DEF Tank Capacity: 11 Gal (40L)

POWERTRAIN

Dyna-6 Transmission:

- 25 MPH (40 KPH)

7720S / 7722S: Long Bar Rear Axle 112 in. (2847mm) Long, 3.74 in. (95mm) Diameter
7724S / 7726S: Long Bar Rear Axle 118.2 in. (3002mm) Long, 4.33 in. (110mm) Diameter
Multi-Disc Wet Brakes
Power Differential Lock
Independent PTO:
Dyna-6: 540/1000 RPM, 540 with 6 Spline Shaft, 1000 RPM with 21 Spline Shaft, Flanged Shaft
Rear Fender Mounted PTO Shut-Off
Less SV1 & SV2 Settings

FRONT WHEEL ASSIST AXLE

Power Front Axle (PFA)
Shielded Center Drive Line with Electro-Hydraulic Control & Front Wheel Drive Differential Lock
55 Degree Steering Angle

HYDRAULICS

Closed Center Load Sensing 29 GPM (110 L/Min) Pump
2900 PSI (200 Bar) Maximum Pressure
3rd & 4th Mechanical Valves – Lever Controlled on Right Hand Console
Hydrostatic Power Steering

HITCH

3 Point Hitch: Category 3 Linkage Ball Ends with Quick Hitch

- Active Transport Control
- Lower Link Sensing
- Electronic Draft Control, Electronic Height Control and Rate of Drop
- Rub Block Stabilizers
- Left and Right Side External 3 Point Control

7720S / 7722S: Swinging Category II Drawbar w/ Clevis & Drop Pin
7724S / 7726S: Swinging Category III Drawbar w/ Clevis & Drop Pin

ELECTRICAL SYSTEM

Twin 120 AMP Alternators
2 – 12V Batteries, 600 CCA Each (SAE)
7 Pin ASAE Rear Trailer Electrical Outlet
Electrical Isolator Switch and Jumpstart Point
Ignition with Neutral Start and Key Shutoff

LIGHTING

8 Front Hood Mounted Lights
Four Front Single Bulb Worklights
Two Rear Double Bulb Worklights
Two Field Lights on Hand Rails and Rear Fenders with Taillights, Flashing Warning Lights, and Turn Signals

INSTRUMENTS

FieldStar 5 (Isobus and Guidance)
Tachometer: Digital and Analog
PTO Speed: Digital
Ground Speed Display: Digital
Fuel Level, DEF Level, and Coolant Temp Gauges
Warning/Information Lights

OPERATOR AREA

Instructor Seat with Seat Belt
6 Post Cab
Transmission Control T-Handle on Right Hand Console
Adjustable Steering Column with SpeedSteer
Front Sun Visor
Air Conditioning and Heater
Air Suspended Seat - Automatic Adjustment
Front and Rear Windshield Wiper/Washer
Dual Large Telescoping Outside Rear View Mirrors
Single Inside Rear View Mirror
3 Pin 12V Power Outlets
12V Cigarette Lighter Style Power Outlet

WHEELS AND TIRES

7720S / 7722S

Rear: 480/80R42 R1W Single Semi-Dished Cast Center Wheels
Front: 420/85R28 R1W Single Waffle Wheels

7724S / 7726S

Rear: 480/80R46 R1W Single Semi-Dished Cast Center Wheels
Front: 420/90R30 R1W Single Waffle Wheels

OTHER STANDARD FEATURES

Massey Ferguson Guide Ready (Verizon)
Massey Ferguson Connect Ready
TaskDoc
Lockable Tool Box
Dual Roof-Mounted Rotating Beacons, Left and Right (Includes SAE SMV sign)
Molded Rear Fenders
English Literature
Water Separator (Fuel Filter)

(F.O.B. PORT OF ENTRY)

Order Code	Catalog Number	Description	Factory Code	Approx. Weight (lb.)	List Price

ONE *ORDER CODE* FROM EACH GROUP MUST BE SPECIFIED. (Unless In Base Option is desired)

BASE MACHINE

DYNA-6 EDITIONS-- Beauvais Built

MF7720S~D6~ES~07	7295626	Massey 7720S Classic Tractor 155 PTO HP	M16283421		211,473.00
MF7722S~D6~ES~07	7295627	Massey 7722S Classic Tractor 165 PTO HP	M16870931		219,103.00
MF7724S~D6~ES~07	7295628	Massey 7724S Classic Tractor 180 PTO HP	M17881710		232,230.00
MF7726S~D6~ES~07	7295629	Massey 7726S Classic Tractor 200 PTO HP	M18565316		241,108.00

TRANSMISSION OPTIONS

25-NA030	Base	6x4 Dyna-6 Transmission with 24F/24R gears . . . . 25 MPH (40 KPH) with Dynamic Tractor Management (DTM) Includes: Non-Suspended Power Front Axle			**In Base**
25-NA032	7295480	6x4 Dyna-6 Transmission with 24F/24R gears . . . . 25 MPH (40 KPH) with Dynamic Tractor Management (DTM) Includes: Suspended Power Front Axle	M563563		7,319.00
25-A7031	7295150	6X4 Dyna-6 Transmission with 24F/24R gears. . . . 31 MPH (50 KPH) with Dynamic Tractor Management (DTM). Includes: Suspended Power Front Axle & High Capacity Power Assist Brakes	M784938		10,194.00

AUXILIARY HYDRAULIC FLOW

370-DP110	Base	29 GPM (110 L/min) Closed Center Load Sensing.			**In Base**
370-DP150	7293529	39 GPM (150 L/min) Closed Center Load Sensing	M113960		1,480.00

AUXILIARY VALVE 1 & 2

50-KX010	Base	2 Mechanical Controlled Valves, Located on Right Hand Console. 1st and 2nd - Flow Dividing, Kickout, Zero Leak, Float			**In Base**

AUXILIARY VALVE 3 & 4

55-MU012	Base	3rd and 4th Mechanically Controlled Valves, . . . Located on Right Hand Console. Kickout, Zero Leak, Flow Dividing, Float			**In Base**

POWER BEYOND

90-GR000	Base	Less Power Beyond			**In Base**
90-GR010	7295153	Power Beyond Couplers P/T/LS/D	M59598		774.00

REAR AXLE

FOR 7720S - 7722S

60-EE404	Base	Long Bar Rear Axle, 112 in. (2847mm) long . . . . . 3.74 in. (95mm) diameter			**In Base**
60-EE402	7293527	Short Bar Rear Axle, 84.4 in. (2144mm) long . . . 3.74 in. (95mm) diameter	(M48741)		(633.00)

FOR 7724S / 7726S

60-EE405	Base	Long Bar Rear Axle, 118.2 in. (3002mm) long . . . 4.33 in. (110mm) diameter			**In Base**
60-EE403	7293528	Short Bar Rear Axle, 86.7 in. (2202mm) long . . . 4.33 in. (110mm) diameter	(M48741)		(633.00)

(F.O.B. PORT OF ENTRY)

Order Code	Catalog Number	Description	Factory Code	Approx. Weight (lb.)	List Price
REAR 3-POINT HITCH					
85-GC009	Base	Category 3 Telescopic Ball End Links			In Base
85-GC209	7295482	Category 3 Fixed Ball End Links w/ Category 3/3N Quick Hitch **(Requires Loose Accessories Selection 5020434M)**	M105721		1,373.00
85-GC025	7295484	Category 3 Hook End Links,Cat 3/3 & 3/2 Balls & Cones	M09471		123.00
STABILIZER					
165-YG006	Base	Rub Block Stabilizer			In Base
165-YG001	7295485	Heavy Duty Variable Float Telescopic Stabilizers			No Charge
DRAWBAR					
FOR 7720S - 7722S					
95-YM027	Base	Swinging Category II Drawbar w/ Clevis & Drop Pin			**In Base**
95-YM242	7293695	Swinging Category III Drawbar w/ Clevis & Drop Pin	M74459		967.00
FOR 7724S - 7726S					
95-YM242	Base	Swinging Category III Drawbar w/ Clevis & Drop Pin			**In Base**
95-YM027	7293696	Swinging Category II Drawbar w/ Clevis & Drop Pin	(M26411)		(343.00)
INSTRUMENT PANEL					
175- BA051	7295648	FieldStar 5 (Isobus and Massey Ferguson Guide) All XR options available			**In Base**
175-BA005	7295647	System Information Screen	(M628628)		(8,164.00)
MASSEY FERGUSON GUIDE					
300-XR341*	7295653**	Massey Ferguson Guide Ready Package (Verizon) Verizon Cellular Network when using NTRIP and Task Doc Pro			**In Base**
300-XR000	7295649	Less Massey Ferguson Guide (Requires Less SpeedSteer)	(M346500)		(4,500.00)
300-XR342*	7295654	Massey Ferguson Guide Standard (Verizon) with Novatel Smart7 Receiver Pass-to-Pass Accuracy of +/- 20 cm (+/- 8 inch) For correction signal WAAS (no subscription needed)	M211750		2,750.00
300-XR346*	7295655	Massey Ferguson Guide Standard (Verizon) Trimble® AG-382 Receiver Pass-to-Pass Accuracy of +/- 20 cm (+/- 8 inch) For correction signal WAAS (no subscription needed)	M273350		3,550.00
300-XR301*	7295650**	Massey Ferguson Guide Ready Package (GSM) Suggested for Canada and US where Verizon is not preferred when using NTRIP and Task Doc Pro			No Charge
300-XR302*	7295651	Massey Ferguson Guide Standard (GSM) with Novatel Smart7 Receiver Pass-to-Pass Accuracy of +/- 20 cm (+/- 8 inch) For correction signal WAAS (no subscription needed)	M211750		2,750.00
300-XR306*	7295652	Massey Ferguson Guide Standard (GSM) Trimble® AG-382 Receiver Pass-to-Pass Accuracy of +/- 20 cm (+/- 8 inch) For correction signal WAAS (no subscription needed)	M273350		3,550.00

***REQUIRES SPEEDSTEER AD004**

****TO COMPLETE MF GUIDE, ORDER FIELDSTAR 5 AND MF GUIDE RECEIVER FROM PARTS**

SPEEDSTEER					
185-AD004	Base	SpeedSteer Option Mandatory with Massey Ferguson Guide Ready Not Compatible with Less Massey Ferguson Guide- XR000			**In Base**
185-AD002	7293558	Less SpeedSteer	(M202510)		(2,630.00)
TELEMETRY					
160-BS002	Base	Massey Ferguson Connect Ready			**In Base**
160-BS119*	7295662	Massey Ferguson Connect Basic Package (Verizon) Verizon Cellular Network when using Massey Ferguson Connect	M136367		1,771.00
160-BS019*	7295660	Massey Ferguson Connect Basic Package (GSM) Suggested for Canada and US where Verizon is not preferred when using Massey Ferguson Connect	M136367		1,771.00

*** 5 YEAR SUBSCRIPTION, MUST BE ACTIVATED WITHIN 12 MONTHS OF WARRANTY REGISTRATION**

(F.O.B. PORT OF ENTRY)

Order Code	Catalog Number	Description	Factory Code	Approx. Weight (lb.)	List Price
PTO					
100-LA032	Base	2000 Engine RPM with 540/1000RPM flanged PTO, in Cab Control - 6/21 spline studs			**In Base**
100-LA045	7295154	2000 Engine RPM w/ 540/540e/1000RPM flanged PTO, in Cab Control - 6 & 21 spline studs	M21483		279.00
100-LA100	7295155	2000 Engine RPM w/ 540e/1000e/1000RPM flanged PTO, in Cab Control - 6 & 21 spline studs	M28798		374.00
FRONT HITCH					
230-FA000	Base	Less Front Hitch, Less Front Hydraulic Couplers			**In Base**
230-F1120*	7293366	8,818 lbs. (4000 kg) Front Linkage Double Acting Cylinders with 1 Set of Front Hydraulic Couplers with Pressure Drain	M604219		7,847.00
230-F1153*	7295161	8,818 lbs. (4000 kg) Front Linkage Double Acting Cylinders with 1 Set of Hydraulic Couplers with Front PTO (21 Spline Anti-Clockwise)	M1193500		15,500.00
***REQUIRES: SUSPENDED FRONT AXLE**					
RADIO					
365-AF001	Base	Antenna and Speakers (Less Radio)			**In Base**
365-AF011	7294227	Radio, AM/FM, CD Player and MP3 Compatible	M42350		550.00
CAB					
115-AM015	Base	Standard Cab Isolation			**In Base**
115-AM084	7293559	OptiRide Passive Mechanical Cab Suspension	M141988		1,844.00
145-AL032	7295330	Telescopic Wide Angle Mirrors	M28413		369.00
FRONT WEIGHTS					
285-YA000	Base	Front Weight Carrier			**In Base**
285-YA112	7293487	121 LBS (55 kgs.) Front Weights, Set of 12 with Hardware - total Weight 1,455 lbs. (660 kgs.) Not compatible with Monoblock Weights (YB003 & YB004) or Front Hitch (F1120, F1145, or F1153)	M189343		2,459.00
REAR WHEEL WEIGHTS					
325-RD040	7294192	551 lbs. (250 kgs.) Weights, Set of 2 Mounts Externally to Wheel	M146377	1102	1,901.00
325-RD041	7294200	551 lbs. (250 kgs.) Weights, Set of 4 Mounts Externally to Wheel	M292677	2204	3,801.00
BELLY AND HITCH WEIGHTS					
245-YD001	7293374	1 Belly Weight - 584 lbs. (265 kgs.) (For use **WITHOUT** Front 3-Point Hitch)	M122969	584	1,597.00
345-YB003*	7294270	1,875 lbs (850 kg) Monoblock Weight	M281050		3,650.00
345-YB004*	7294271	3,307 lbs (1500 kg) Monoblock Weight	M450373		5,849.00
***NOT COMPATIBLE WITH FRONT WEIGHTS**					

(F.O.B. PORT OF ENTRY)

Order Code	Catalog Number	Description	Factory Code	Approx. Weight (lb.)	List Price
ELECTRICAL					
215-CB000	Base	Less Engine Block Heater			**In Base**
215-CB002	7295498	Engine Block Heater - 110 Volt	M17094		222.00
ALTERNATOR					
220-CE019	Base	Twin 120 AMP Alternators.			**In Base**
LIGHTING					
195	Base	4 Single Bulb Front Worklights, 2 Double Bulb Rear Worklights, Less Mid Mounted Front Worklights			**In Base**
195-A0149	7294329	4 LED Front Worklights, 2 LED Rear Worklights LED Worklights on Front Hood, Handrails and Rear Fenders	M215138		2,794.00
PIVOTING FRONT FENDERS					
155-WE000	Base	Less Pivoting Front Fenders			**In Base**
155-WE110*	7294204	Pivoting Front Fenders - Standard Width	M134750		1,750.00
155-WE111*	7294205	Pivoting Front Fenders - Wide Width	M158928		2,064.00
		*Width depends on tire selection; see Chart Below			

Fender Size		
Standard	**Wide**	**Tire Sizes**
12.6" (320 mm)	13.9" (355 mm)	320/85R34 (12.4R34) 320/85R38 (12.4R38)
14.9" (380 mm)	16.1" (410 mm)	380/85R30 (14.9R30) 380/85R34 (14.9R34) 400/80R28
16.1" (410 mm)	18.5" (470 mm)	420/85R28 (16.9R28) 420/85R30 (16.9R30) 420/90R30
18.5" (470 mm)	20.4" (520 mm)	480/70R30
20.4" (520 mm)	24.4" (620 mm)	540/65R28 540/65R30
24.4" (620 mm)	27.5" (700 mm)	600/65R28 710/55R30

REAR FENDERS					
255-WD012	Base	Rear Fenders without Extensions, 78.74" (2.00 M)			**In Base**
255-WD017	7293107	Wide Fender -90.55" (2.3 M) with Rear Extension	M106029		1,377.00
255-WD020	7293109	Extra Wide Fender -100.4" (2.55 M) with Rear Extension	M120813		1,569.00

(F.O.B. PORT OF ENTRY)

Order Code	Catalog Number	Description	Factory Code	Approx. Weight (lb.)	List Price
MISCELLANEOUS					
35-EN001	7293092	Creeper Gear (4:1 Reduction)	M197120		2,560.00
250-GS001	7293100	Hydraulic Trailer Brakes	M67452		876.00
250-GS067	7293552	Pneumatic & Hydraulic Trailer Brakes	M619465		8,045.00
275-TC005	7294210	French Language OIB			No Charge
275-TC011	7294211	Spanish Language OIB			No Charge
QUICK HITCH					
	5020455M	Quick Hitch, Category 3/3N (Installed at the Assembly Center)	M177408		2,304.00
DEALER INSTALLED OPTIONS					
FRONT WEIGHTS					
BEAUVAIS BUILT					
	5020186M	8 x 55 kg (121 lbs.) Front Weights	M123739	968	1,607.00
	5020187M	10 x 55 kg (121 lbs.) Front Weights	M153230	1210	1,990.00
	5020188M	12 x 55 kg (121 lbs.) Front Weights	M189343	1452	2,459.00
	5020189M	14 x 55 kg (121 lbs.) Front Weights	M220913	1694	2,869.00
	5020190M	16 x 55 kg (121 lbs.) Front Weights	M252483	1936	3,279.00

(F.O.B. PORT OF ENTRY)

Order Code	Catalog Number	Description	Factory Code	Approx. Weight (lb.)	List Price

TIRES for 7720S and 7722S

TIRE BRAND SELECTION

70-Blank	7294212	Factory Brand Choice			No Charge
70-T0001	7294195	Michelin Brand Required	M150150		1,950.00
70-T0007	7294197	Firestone Brand Required	M94633		1,229.00
70-T0010	7294198	Trelleborg Brand Required	M94633		1,229.00

FRONT AND REAR TIRES

Rear: Single Welded Pressed Steel - Set of 2
Front: Fixed Welded Steel Rim

75-W1585	7294857B3 7294793B1	Rear: 710/70R38 R1W (MI, TR) Front: 600/65R28 R1W (MI, TR)	M351736		4,568.00
75-W1718	7294880B3 7294793B1	Rear: 650/65R42 R1W (MI, TR) Front: 600/65R28 R1W (MI, TR)	M339493		4,409.00

Rear: Single Semi Dished Cast Centers- Set of 2
Front: Waffle Wheel

75-Base	7294882B3 7294762B1	Rear: 480/80R42 R1W (18.4R42 R1W) (MI, TR) Front: 420/85R28 R1W (16.9R28 R1W) (MI, TR)			**In Base**
75-W1377	7294882B3 7294765B1	Rear: 480/80R42 R1W (18.4R42 R1W) (MI, TR) Front: 380/85R30 R1W (14.9R30 R1W) (MI, TR)	(M51205)		(665.00)
75-W1485	7294870B3 7294766B1	Rear: 520/85R42 R1W (20.8R42 R1W) (MI, TR) Front: 420/85R30 R1W (16.9R30 R1W) (MI, TR)	M74382		966.00
75-W1398	7294870B3 7294770B1	Rear: 520/85R42 R1W (20.8R42 R1W) (MI, TR) Front: 380/85R34 R1W (14.9R34 R1W) (MI, TR)	M90706		1,178.00
75-W1626	7294871B3 7294766B1	Rear: 480/80R46 R1W (18.4R46 R1W) (MI, TR) Front: 420/85R30 R1W (16.9R30 R1W) (MI, TR)	M48048		624.00
75-W1413	7294871B3 7294767B1	Rear: 480/80R46 R1W (18.4R46 R1W) (MI) Front: 420/90R30 R1W (MI)	M85316		1,108.00
75-W1349	7294871B3 7294770B1	Rear: 480/80R46 R1W (18.4R46 R1W) (MI, TR) Front: 380/85R34 R1W (14.9R34 R1W) (MI, TR)	M64372		836.00
75-W1802	7294911B3 7294770B1	Rear: 380/90R50 R1W (FI) Front: 380/85R34 R1W (14.9R34 R1W) (FI)	M127820		1,660.00
75-W1354	7294875B3 7294773B1	Rear: 320/90R54 R1W (MI) Front: 320/85R38 R1W (MI)	M275044		3,572.00

(F.O.B. PORT OF ENTRY)

Order Code	Catalog Number	Description	Factory Code	Approx. Weight (lb.)	List Price

TIRES for 7720S and 7722S

FRONT AND REAR TIRES - CONTINUED

Rear: Dual Cast Inner / Steel Outer - Set of 4
Front: Waffle Wheel

75-W1386	7294886B3 7294762B1	Duals: 480/80R42 R1W (18.4R42 R1W) (MI, TR) . . . . Front: 420/85R28 R1W (16.9R28 R1W) (MI, TR)	M554477		7,201.00
75-W1380	7294886B3 7294765B1	Duals: 480/80R42 R1W (18.4R42 R1W) (MI, TR) . . . . Front: 380/85R30 R1W (MI, TR)	M503272		6,536.00
75-W1596	7294863B3 7294766B1	Duals: 520/85R42 R1W (20.8R42 R1W) (MI, TR) . . . . Front: 420/85R30 R1W (16.9R30 R1W) (MI, TR)	M771078		10,014.00
75-W1391	7294863B3 7294767B1	Duals: 520/85R42 R1W (20.8R42 R1W) (MI) . . . . . . Front: 420/90R30 R1W (MI)	M808346		10,498.00
75-W1399	7294863B3 7294770B1	Duals: 520/85R42 R1W (20.8R42 R1W) (MI, TR) . . . . Front: 380/85R34 R1W (14.9R34 R1W) (MI, TR)	M787402		10,226.00
75-W1627	7294864B3 7294766B1	Duals: 480/80R46 R1W (18.4R46 R1W) (MI, TR) . . . . Front: 420/85R30 R1W (16.9R30 R1W) (MI, TR)	M725571		9,423.00
75-W1414	7294864B3 7294767B1	Duals: 480/80R46 R1W (18.4R46 R1W) (MI) . . . . . . Front: 420/90R30 R1W (MI)	M762839		9,907.00
75-W1401	7294864B3 7294770B1	Duals: 480/80R46 R1W (18.4R46 R1W) (MI, TR) . . . . Front: 380/85R34 R1W (14.9R34 R1W) (MI, TR)	M741895		9,635.00
75-W1745	7294866B3 7294770B1	Duals: 380/90R50 R1W (14.9R50 R1W) (FI) . . . . . . Front: 380/85R34 R1W (14.9R34 R1W) (FI)	M681296		8,848.00
75-W1404	7294868B3 7294773B1	Duals: 320/90R54 R1W (MI) . . . . . . Front: 320/85R38 R1W (MI)	M790251		10,263.00

Rear: Dual Cast Inner / Steel Outer - Set of 4
Front: Welded Wheel

75-W1821	7294863B3 7294793B1	Duals: 520/85R42 R1W (20.8R42 R1W) (MI, TR) . . . . Front: 600/65R28 R1W (MI, TR)	M996380		12,940.00

(F.O.B. PORT OF ENTRY)

Order Code	Catalog Number	Description	Factory Code	Approx. Weight (lb.)	List Price

TIRES for 7724S and 7726S

TIRE BRAND SELECTION

70-Blank	7294212	Factory Brand Choice			No Charge
70-T0001	7294195	Michelin Brand Required	M150150		1,950.00
70-T0007	7294197	Firestone Brand Required	M94633		1,229.00
70-T0010	7294198	Trelleborg Brand Required	M94633		1,229.00

FRONT AND REAR TIRES

Rear: Single Welded Pressed Steel - Set of 2
Front: Fixed Welded Steel Rim

75-W1585	7294857B2 7294793	Rear: 710/70R38 R1W (MI, TR) Front: 600/65R28 R1W (MI, TR)	M266343		3,459.00
75-W1587	7294859B2 7294794	Rear: 710/70R42 R1W (MI, TR) Front: 600/70R28 R1W (MI, TR)	(M110495)		(1,435.00)
75-W1718	7294880B2 7294793	Rear: 650/65R42 R1W (MI, TR) Front: 600/65R28 R1W (MI, TR)	M258412		3,356.00

Rear: Single Semi Dished Cast Centers- Set of 2
Front: Waffle Wheel

75-Base	7294871B2 7294767	Rear: 480/80R46 R1W (18.4R46 R1W) (MI) Front: 420/90R30 R1W (MI)			**In Base**
75-W1485	7294870B2 7294766	Rear: 520/85R42 R1W (20.8R42 R1W) (MI, TR) Front: 420/85R30 R1W (16.9R30 R1W) (MI, TR)	(M09933)		(129.00)
75-W1398	7294870B2 7294770	Rear: 520/85R42 R1W (20.8R42 R1W) (MI, TR) Front: 380/85R34 R1W (14.9R34 R1W) (MI, TR)	M06006		78.00
75-W1384	7294882B2 7294762	Rear: 480/80R42 R1W (18.4R42 R1W) (MI, TR) Front: 420/85R28 (16.9R28 R1W) R1W (MI, TR)	(M82852)		(1,076.00)
75-W1377	7294882B2 7294765	Rear: 480/80R42 R1W (18.4R42 R1W) (MI, TR) Front: 380/85R30 (14.9R30) R1W (MI, TR)	(M134057)		(1,741.00)
75-W1626	7294871B2 7294766	Rear: 480/80R46 R1W (18.4R46 R1W) (MI, TR) Front: 420/85R30 (16.9R30) R1W (MI, TR)	(M36344)		(472.00)
75-W1349	7294871B2 7294770	Rear: 480/80R46 R1W (18.4R46 R1W) (MI, TR) Front: 380/85R34 (14.9R34) R1W (MI, TR)	(M20405)		(265.00)

(F.O.B. PORT OF ENTRY)

TIRES for 7724S and 7726S

FRONT AND REAR TIRES - CONTINUED

Order Code	Catalog Number	Description	Factory Code	Approx. Weight (lb.)	List Price
		Rear: Dual Cast Inner / Steel Outer - Set of 4			
		Front: Waffle Wheel			
75-W1386	7294886B2 7294762	Duals: 480/80R42 R1W (18.4R42 R1W) (MI, TR) Front: 420/85R28 R1W (16.9R28 R1W) (MI, TR)	M470162		6,106.00
75-W1380	7294886B2 7294765	Duals: 480/80R42 R1W (18.4R42 R1W) (MI, TR) Front: 380/85R30 R1W (MI, TR)	M418957		5,441.00
75-W1596	7294863B2 7294766	Duals: 520/85R42 R1W (20.8R42 R1W) (MI, TR) Front: 420/85R30 R1W (16.9R30 R1W) (MI, TR)	M686763		8,919.00
75-W1391	7294863B2 7294767	Duals: 520/85R42 R1W (20.8R42 R1W) (MI) Front: 420/90R30 R1W (MI)	M723107		9,391.00
75-W1399	7294863B2 7294770	Duals: 520/85R42 R1W (20.8R42 R1W) (MI, TR) Front: 380/85R34 R1W (14.9R34 R1W) (MI, TR)	M702702		9,126.00
75-W1627	7294864B2 7294766	Duals: 480/80R46 R1W (18.4R46 R1W) (MI, TR) Front: 420/85R30 R1W (16.9R30 R1W) (MI, TR)	M641179		8,327.00
75-W1414	7294864B2 7294767	Duals: 480/80R46 R1W (18.4R46 R1W) (MI) Front: 420/90R30 R1W (MI)	M677523		8,799.00
75-W1401	7294864B2 7294770	Duals: 480/80R46 R1W (18.4R46 R1W) (MI, TR) Front: 380/85R34 R1W (14.9R34 R1W) (MI, TR)	M657118		8,534.00
75-W1404	7294868B2 7294773	Duals: 320/90R54 R1W (MI) Front: 320/85R38 R1W (MI)	M704935		9,155.00
75-W1745	7294866B2 7294770	Duals: 380/90R50 R1W (14.9R50 R1W) (FI) Front: 380/85R34 R1W (14.9R34 R1W) (FI)	M596365		7,745.00
		Rear: Dual Cast Inner / Steel Outer - Set of 4			
		Front: Welded Wheel			
75-W1821	7294863B2 7294793	Duals: 520/85R42 R1W (20.8R42 R1W) (MI, TR) Front: 600/65R28 R1W (MI, TR)	M911064		11,832.00

7700S LARGE FRAME DELUXE EDITION

MASSEY FERGUSON®

(F.O.B. PORT OF ENTRY)

DELUXE EDITION FEATURES

ENGINE

7720S Dyna-6, 7720S Dyna-VT:
7720S: 185 Rated Engine HP, 155 PTO HP, 200 Max Engine HP
Rated Engine HP @ 2100 RPM

AP66-4: AGCO POWER™ 6.6L (402 cu in.) 6 Cylinder, Tier 4f Compliant
- SCR Technology
- Air-to-Air Aftercooled, Common Rail Injection, eWastegate Turbocharged

7722S / 7724S / 7726S Dyna-6, 7722S / 7724S / 7726SDyna-VT:
7722S: 200 Rated Engine HP, 165 PTO HP, 215 Max Engine HP
7724S: 220 Rated Engine HP, 180 PTO HP, 235 Max Engine HP
7726S: 240 Rated Engine HP, 200 PTO HP, 255 Max Engine HP
Rated Engine HP @ 2100 RPM

AP74-4: AGCO POWER™ 7.4L (452 cu in.) 6 Cylinder, Tier 4f Compliant
- SCR Technology
- Air-to-Air Aftercooled, Common Rail Injection, Turbocharged

Electronic Engine Management (EEM) with Dual ERPM Settings
Electronic Controlled Viscous Fan Drive
Dual Element Dry Type Air Cleaner
Vertical Exhaust at Right Front Cab Post
Cooling System: Antifreeze to Minus 30°F (-34°C)
Fuel Tank Capacity: 114 Gal (430)
DEF Tank Capacity: 11 Gal (40L)

POWERTRAIN

Dyna-VT Transmission:
- Continuously Variable Transmission, 60 ft/h to 25 MPH (18.2 Meters/h to 40 KPH)
- Dynamic Tractor Management (DTM) with Two Programmable Cruise Speeds
- Long Bar Rear Axle 118.2 in. (3002mm) Long, 3.74 in. (95mm) Diameter

Dyna-6 Transmission:
- 25 MPH (40 KPH)
- Dynamic Tractor Management (DTM) with Two Programmable Cruise Speeds

7720S / 7722S: Long Bar Rear Axle 112 in. (2847mm) Long, 3.74 in. (95mm) Diameter
7724S / 7726S: Long Bar Rear Axle 118.2 in. (3002mm) Long, 4.33 in. (110mm) Diameter
Multi-Disc Wet Brakes
Power Differential Lock
Independent PTO
Dyna-VT: 540/540E/1000/1000E RPM Flanged Shaft, 540 with 6 Spline and 1000 with 21 Spline
Dyna-6: 540/540E/1000 RPM Flanged Shaft, 540 with 6 Spline and 1000 with 21 Spline
Rear Fender Mounted PTO Shut-Off
SV1 & SV2 Settings

FRONT WHEEL ASSIST AXLE

Power Front Axle (PFA)
Shielded Center Drive Line with Electro-Hydraulic Control & Front Wheel Drive Differential Lock
55 Degree Steering Angle

HYDRAULICS

Closed Center Load Sensing 29 gpm (110 L/Min) Pump
2900 PSI (200 Bar) Maximum Pressure
2 Electric Valves - Fingertip Controlled on Armrest, 2 Mechanical Valves – Lever Controlled on Right Hand Console
Hydrostatic Power Steering
Fender Control Spool Valve Control

ELECTRICAL SYSTEM

2 – 120 Amp Alternators
2 – 12V Batteries, 600 CCA Each (SAE)
7 Pin ASAE Rear Trailer Electrical Outlet
Electrical Isolator Switch and Jumpstart Point
Ignition with Neutral Start and Key Shutoff

HITCH

3 Point Hitch: Category 3 Linkage Ball Ends
- Active Transport Control
- Lower Link Sensing
- Electronic Draft Control, Electronic Height Control and Rate of Drop
- Rub Block Stabilizers
- Left and Right Side External 3 Point Control

7720S/7722S: Swinging Category II Drawbar w/ Clevis & Drop Pin
7724S / 7726S: Swinging Category III Drawbar w/ Clevis & Drop Pin

LIGHTING

8 Front Hood Mounted Lights
Four Front Single Bulb Worklights
Two Rear Double Bulb Worklights
Two Field Lights on Hand Rails and Rear Fenders with Taillights, Flashing Warning Lights, and Turn Signals

INSTRUMENTS

C1000 (Tractor Functions and Video) + FieldStar 5 (Isobus & Massey Ferguson Guide)
Tachometer: Digital and Analog
PTO Speed: Digital
Ground Speed Display: Digital
Fuel Level, DEF Level, and Coolant Temp Gauges
Warning/Information Lights

OPERATOR AREA

Instructors Seat with Seat Belt
6 Post Cab
Transmission Control T-Handle on Armrest
Adjustable Steering Column with SpeedSteer
Front Sun Visor
Air Conditioning and Heater
Air Suspended Seat - Automatic Adjustment
Front and Rear Windshield Wiper/Washer
Dual Wide Angle Telescoping Outside Rear View Mirrors
Single Inside Rear View Mirror
Antenna and Speakers (Less Radio)
3 Pin 12V Power Outlet
12V Cigarette Lighter Style Power Outlet
ISO 11783 9-Pin in Cab Connector
ISO 11786 7-Pin in Cab Connector

WHEELS AND TIRES

7720S / 7722S
Rear 480/80R42 R1W Single Semi-Dished Cast Center Wheels
Front 420/85R28 R1W Single Waffle Wheels
7724S / 7726S
Rear 480/80R46 R1W Single Semi-Dished Cast Center Wheels
Front 420/90R30 R1W Single Waffle Wheels

OTHER STANDARD FEATURES

Massey Ferguson Guide Ready (Verizon)
Massey Ferguson Connect Ready
TaskDoc
Lockable Tool Box
Dual Roof-Mounted Rotating Beacons, Left and Right (Includes SAE SMV sign)
Molded Rear Fenders
English Literature
Water Separator (Fuel Filter)

(F.O.B. PORT OF ENTRY)

Order Code	Catalog Number	Description	Factory Code	Approx. Weight (lb.)	List Price

ONE *ORDER CODE* FROM EACH GROUP MUST BE SPECIFIED. (Unless In Base Option is desired)

BASE MACHINE

DYNA-6 EDITIONS-- Beauvais Built

MF7720S~D6~EF~07	7295630	Massey 7720S Deluxe Tractor 155 PTO HP	M16417632	213,216.00
MF7722S~D6~EF~07	7295631	Massey 7722S Deluxe Tractor 165 PTO HP	M16999444	220,772.00
MF7724S~D6~EF~07	7295632	Massey 7724S Deluxe Tractor 180 PTO HP	M18000290	233,770.00
MF7726S~D6~EF~07	7295633	Massey 7726S Deluxe Tractor 200 PTO HP	M18677197	242,561.00

DYNA-VT EDITIONS-- Jackson Built

MF7720S~DV~EF~07	7295634	Massey 7720S Deluxe Tractor 155 PTO HP	M17285037	224,481.00
MF7722S~DV~EF~07	7295635	Massey 7722S Deluxe Tractor 165 PTO HP	M17872624	232,112.00
MF7724S~DV~EF~07	7295636	Massey 7724S Deluxe Tractor 180 PTO HP	M18883326	245,238.00
MF7726S~DV~EF~07	7295637	Massey 7726S Deluxe Tractor 200 PTO HP	M19566932	254,116.00

***16 weeks out for changes on Jackson Built Models**

MARKETING PACKAGES

320-MLP8012	7295472	Deluxe Comfort Package, Includes:	M244783	3,179.00
		Radio, AM/FM, CD Player and MP3 Compatible (AF011)		
		Telescopic Wide Angle Mirrors with Electric De-Icing & Adjustment (AL033)		
		Passive Mechanical Suspension (AM084)		
		Automatic Climate Control (AQ004)		
320-MLP8013	7295474	Premium Comfort Package, Includes:	M562408	7,304.00
		Superluxe Grammar Seat (AE042)		
		Radio, AM/FM, CD Player and MP3 Compatible (AF011)		
		Telescopic Wide Angle Mirrors with Electric De-Icing & Adjustment (AL033)		
		OptiRide Active Mechanical Cab Suspension (AM117)		
		Automatic Climate Control (AQ004)		
		4 LED Front Worklights, 2 LED Rear Worklights (A0149)		
		LED Worklights on Front Hood, Handrails and Rear Fenders		

TRANSMISSION OPTIONS FOR DYNA-6 EDITIONS

FOR MF7720S - MF7726S

25-EA655	Base	6x4 Dyna-6 Transmission with 24F/24R gears . . .		**In Base**
		25 MPH (40 KPH) with Dynamic Tractor Management (DTM)		
		Includes: Non-Suspended Power Front Axle & Power Assisted Main Brakes		
25-NA032	7295480	6x4 Dyna-6 Transmission with 24F/24R gears . . .	M563563	7,319.00
		25 MPH (40 KPH) with Dynamic Tractor Management (DTM)		
		Includes: Suspended Power Front Axle		
25-A7031	7295150	6X4 Dyna-6 Transmission with 24F/24R gears. . .	M784938	10,194.00
		31 MPH (50 KPH) with Dynamic Tractor Management (DTM).		
		Includes: Suspended Power Front Axle &		
		High Capacity Power Assist Brakes		

TRANSMISSION OPTIONS FOR DYNA-VT EDITIONS

25-EA655	Base	Dyna-VT Transmission - 25 MPH (40 KPH)		**In Base**
		Includes: Non-Suspended Power Front Axle & Power Assisted Main Brakes		
25-A7024	7295481	Dyna-VT Transmission - 31 MPH (50 KPH)	M516824	6,712.00
		Includes: Suspended Power Front Axle &		
		High Capacity Power Assist Brakes		

(F.O.B. PORT OF ENTRY)

Order Code	Catalog Number	Description	Factory Code	Approx. Weight (lb.)	List Price
ARMREST CONTROL					
30-EC021	Base	"T" Lever Control on Armrest			**In Base**
30-EC022	7295276	Power Control Shuttle - MultiPad Lever on Armrest	M93016		1,208.00
AUXILIARY HYDRAULIC FLOW					
DYNA-6					
370-DP110	Base	29 GPM (110 L/min) Closed Center Load Sensing			**In Base**
370-DP150	7293529	39 GPM (150 L/min) Closed Center Load Sensing	M113960		1,480.00
DYNA-VT					
370-DP110	Base	29 GPM (110 L/min) Closed Center Load Sensing			**In Base**
370-DP190	7293697	50 GPM (190 L/min) Closed Center Load Sensing	M197659		2,567.00
AUXILIARY VALVE 1 & 2					
50-KX011	Base	Valves 1 and 2 Electric, Fingertip Controlled Spool Valves Fingertips Located in Armrest			**In Base**
50-KX012	7293530	Valves 1 & 2 Electric with Multifunction Joystick on the Armrest (Required when Choosing Factory Installed Loader Provisions (LL004))	M107261		1,393.00
TO UTILIZE THE FACTORY INSTALLED MULTIFUNCTION JOYSTICK WITH A LOADER, THE TRACTOR MUST BE EQUIPPED WITH THE LOADER PROVISIONS FROM THE FACTORY.					
AUXILIARY VALVE 3 & 4					
55-MU012	Base	3rd and 4th Mechanically Controlled Valves, with levers located in Right Hand Console Kickout, Zero Leak, Flow Dividing, Float			**In Base**
55-MU031	7293676	3rd and 4th Electric, Fingertip Controlled Valves with Fingertips located on Right Hand Console	M113113		1,469.00
55-MU041	7295486	3rd, 4th & 5th Fingertip Controlled Electric Spool Valve. (Fingertips located on Right Hand Console) (Available on Dyna-VT Only)	M152460		1,980.00
POWER BEYOND					
90-GR000	Base	Less Power Beyond			**In Base**
90-GR010	7295153	Power Beyond Couplers P/T/LS/D	M59598		774.00
REAR AXLE					
DYNA-6					
FOR 7720S - 7722S					
60-EE404	Base	Long Bar Rear Axle, 112 in. (2847 mm) long 3.74 in. (95 mm) diameter			**In Base**
60-EE402	7293527	Short Bar Rear Axle, 84.4 in. (2144 mm) long 3.74 in. (95 mm) diameter	(M48741)		(633.00)
FOR 7724S / 7726S					
60-EE405	Base	Long Bar Rear Axle, 118.2 in. (3002 mm) long 4.33 in. (110 mm) diameter			**In Base**
60-EE403	7293528	Short Bar Rear Axle, 86.7 in. (2202 mm) long 4.33 in. (110 mm) diameter	(M48741)		(633.00)
DYNA-VT					
60-EE404	Base	Long Bar Rear Axle, 118.2 in. (3002mm) long, 3.74 in. (95 mm) diameter			**In Base**
60-EE402	7293527	Short Bar Rear Axle, 97.2 in. (2469mm) long. 3.74 in. (95 mm) diameter	(M48741)		(633.00)

(F.O.B. PORT OF ENTRY)

Order Code	Catalog Number	Description	Factory Code	Approx. Weight (lb.)	List Price
DRAWBAR					
FOR 7720S - 7722S					
95-YM027	Base	Swinging Category II Drawbar w/ Clevis & Drop Pin . .			**In Base**
95-YM242	7293695	Swinging Category III Drawbar w/ Clevis & Drop Pin . .	M74459		967.00
FOR 7724S - 7726S					
95-YM242	Base	Swinging Category III Drawbar w/ Clevis & Drop Pin . .			**In Base**
95-YM027	7293696	Swinging Category II Drawbar w/ Clevis & Drop Pin . .	(M26411)		(343.00)
REAR 3-POINT HITCH					
85-GC009	Base	Category 3 Telescopic Ball End Links.			In Base
85-GC209	7295482	Category 3 Fixed Ball End Links with Category 3/3N . . Quick Hitch **(Requires Loose Accessories Selection 5020434M) (Available for Dyna-6 only)**	M105721		1,373.00
85-GC025	7295484	Category 3 Hook End Links, with Hook Style Links . . . and Cat 3/3 and Cat 2/3 Balls and Cones	M09471		123.00
85-GC210	7295483	Category 3 Fixed Ball End Links with Quick Hitch. . . . **(Available for Dyna-VT only)**	M105721		1,373.00
STABILIZER					
165-YG006	Base	Rub Block Stabilizer.			In Base
165-YG001	7295485	Heavy Duty Variable Float Telescopic Stabilizers. . . .			No Charge

(F.O.B. PORT OF ENTRY)

Order Code	Catalog Number	Description	Factory Code	Approx. Weight (lb.)	List Price
INSTRUMENT PANEL					
175-BA053	7295355	C1000 (Tractor Functions and Video) + FieldStar 5 . . . (Isobus & Massey Ferguson Guide) All XR options available			**In Base**
175-BA051	7295450	FieldStar 5 (Isobus and Massey Ferguson Guide) . . . All XR options available	(M06160)		(80.00)
175-BA024	7295351	C1000 (Tractor Functions and Video)	(M160160)		(2,080.00)
175-BA005	7295448	System Information Screen	(M634788)		(8,244.00)
MASSEY FERGUSON GUIDE					
BA053 IS NEEDED FOR MF GUIDE					
300-XR341*	7295653**	Massey Ferguson Guide Ready Package (Verizon) . . Verizon Cellular Network when using NTRIP and Task Doc Pro			**In Base**
300-XR000	7295649	Less Massey Ferguson Guide . . . . . . (Requires Less SpeedSteer)	(M346500)		(4,500.00)
300-XR342*	7295654	Massey Ferguson Guide Standard (Verizon)	M211750		2,750.00
		with Novatel Smart7 Receiver Pass-to-Pass Accuracy of +/- 20 cm (+/- 8 inch) For correction signal WAAS (no subscription needed)			
300-XR346*	7295655	Massey Ferguson Guide Standard (Verizon)	M273350		3,550.00
		Trimble® AG-382 Receiver Pass-to-Pass Accuracy of +/- 20 cm (+/- 8 inch) For correction signal WAAS (no subscription needed)			
300-XR301*	7295650**	Massey Ferguson Guide Ready Package (GSM) . . . . Suggested for Canada and US where Verizon is not preferred when using NTRIP and Task Doc Pro			No Charge
300-XR302*	7295651	Massey Ferguson Guide Standard (GSM)	M211750		2,750.00
		with Novatel Smart7 Receiver Pass-to-Pass Accuracy of +/- 20 cm (+/- 8 inch) For correction signal WAAS (no subscription needed)			
300-XR306*	7295652	Massey Ferguson Guide Standard (GSM)	M273350		3,550.00
		Trimble® AG-382 Receiver Pass-to-Pass Accuracy of +/- 20 cm (+/- 8 inch) For correction signal WAAS (no subscription needed)			
***REQUIRES SPEEDSTEER AD004**					
****TO COMPLETE MF GUIDE, ORDER FIELDSTAR 5 AND MF GUIDE RECEIVER FROM PARTS**					
SPEEDSTEER					
185-AD004	Base	SpeedSteer Option . . . . . . Mandatory with Massey Ferguson Guide Ready Not Compatible with Less Massey Ferguson Guide- XR000			**In Base**
185-AD002	7293558	Less SpeedSteer	(M202510)		(2,630.00)
TELEMETRY					
160-BS002	Base	Massey Ferguson Connect Ready			**In Base**
160-BS119*	7295662	Massey Ferguson Connect Basic Package (Verizon) . .	M136367		1,771.00
		Verizon Cellular Network when using Massey Ferguson Connect			
160-BS019*	7295660	Massey Ferguson Connect Basic Package (GSM) . . .	M136367		1,771.00
		Suggested for Canada and US where Verizon is not preferred when using Massey Ferguson Connect			
*** 5 YEAR SUBSCRIPTION, MUST BE ACTIVATED WITHIN 12 MONTHS OF WARRANTY REGISTRATION**					

Order Code	Catalog Number	Description	Factory Code	Approx. Weight (lb.)	List Price
PTO					
DYNA-6 ONLY					
100-LA045	Base	2000 Engine RPM with 540/540e/1000RPM flanged PTO in Cab Control - 6 & 21 spline studs			**In Base**
100-LA100	7295156	2000 Engine RPM w/ 540e/1000e/1000RPM flanged PTO in Cab Control - 6 & 21 spline studs	M21483		279.00
FRONT HITCH					
230-FA000	Base	Less Front Hitch			**In Base**
230-F1120*	7293366	8,818 lbs. (4000 kg) Front Linkage Double Acting Cylinders with 1 Set of Front Hydraulic Couplers with Pressure Drain	M604219		7,847.00
230-F1153*	7295161	8,818 lbs. (4000 kg) Front Linkage Double Acting Cylinders with 1 Set of Hydraulic Couplers with Front PTO (21 Spline Anti-Clockwise)	M1193500		15,500.00
230-F1150*	7295131	8,818 lbs. (4000 kg) Front Linkage, Double Acting Cylinder with 2 Sets of Hydraulic Couplers with Pressure Drain Requires LL000, Less Loader Provisions	M503272		6,536.00
230-F1152*	7295133	8,818 lbs. (4000 kg) Front Linkage, Double Acting Cylinder with 2 Sets of Hydraulic Couplers with Pressure Drain and Front PTO (21 Spline Anti-Clockwise) Requires LL000, Less Loader Provisions	M1295679		16,827.00
***REQUIRES: SUSPENDED FRONT AXLE AND IS NOT COMPATIBLE WITH CREEPER**					
LOADER PROVISION					
350-LL000	Base	Less Loader Provisions.			**In Base**
350-LL004	7293484	Front Loader Provisions including Hydraulics, Subframe. **Requires: Valves 1 and 2 Electric with a Joystick (KX012) Not Compatible with Creeper**	M497420		6,460.00
350-LL005	7295220	Front Loader Provision w/ Live 3rd-SMS Loader Control **Requires: Valves 1 and 2 Electric with a Joystick (KX012) and Less Front Hitch**	M606606		7,878.00
RADIO					
365-AF001	Base	Antenna and Speakers (Less Radio)			**In Base**
365-AF011	7294227	Radio, AM/FM, CD Player and MP3 Compatible	M42350		550.00

(F.O.B. PORT OF ENTRY)

Order Code	Catalog Number	Description	Factory Code	Approx. Weight (lb.)	List Price
CAB					
115-AM084	7293559	OptiRide Passive Mechanical Cab Suspension	M141988		1,844.00
115-AM117	7295495	OptiRide Active Mechanical Suspension	M249711		3,243.00
125-AE042	7293546	Superluxe Grammar Seat	M147840		1,920.00
145-AL032	7295330	Telescopic Wide Angle Mirrors	M28413		369.00
145-AL033	7295497	Telescopic Wide Angle Mirrors with Electric De-Icing And Adjustment	M47047		611.00
120-AQ004	7293082	Automatic Climate Control	M89474		1,162.00
280-GZ001	7293129	Park Lock, Electronic Activated Park Brake Mounted on Shuttle Lever	M224917		2,921.00
FRONT WEIGHTS					
285-YA000	Base	Front Weight Carrier			**In Base**
285-YA112	7293487	121 lbs. (55 kgs.) Front Weights, Set of 12 with Hardware - total Weight 1,455 lbs. (660 kgs.) Not compatible with Monoblock Weights (YB003 and YB004) or Front Hitch (F1150, F1151, or F1152)	M189343		2,459.00
REAR WHEEL WEIGHTS					
325-RD040	7294192	551 lbs. (250 kgs.) Weights, Set of 2 Mounts Externally to Wheel	M146377	1102	1,901.00
325-RD041	7294200	551 lbs. (250 kgs.) Weights, Set of 4 Mounts Externally to Wheel	M292677	2204	3,801.00
BELLY AND HITCH WEIGHTS					
245-YD001	7293374	1 Belly Weight - 584 lbs. (265 kgs.) (For use **WITHOUT** Front 3-Point Hitch)	M122969	584	1,597.00
345-YB003*	7294270	1,875 lbs (850 kg) Monoblock Weight	M281050		3,650.00
345-YB004*	7294271	3,307 lbs (1500 kg) Monoblock Weight	M450373		5,849.00

***NOT COMPATIBLE WITH FRONT WEIGHTS**

ELECTRICAL					
215-CB000	Base	Less Engine Block Heater			**In Base**
215-CB002	7295498	Engine Block Heater - 110 Volt	M17094		222.00
LIGHTING					
195	Base	4 Single Bulb Front Worklights, 2 Double Bulb Rear Worklights, Less Mid Mounted Front Worklights			**In Base**
195-A0149	7294329	4 LED Front Worklights, 2 LED Rear Worklights LED Worklights on Front Hood, Handrails and Rear Fenders	M215138		2,794.00

(F.O.B. PORT OF ENTRY)

Order Code	Catalog Number	Description	Factory Code	Approx. Weight (lb.)	List Price
PIVOTING FRONT FENDERS					
155-WE000	Base	Less Pivoting Front Fenders			**In Base**
155-WE110*	7294204	Pivoting Front Fenders - Standard Width	M134750		1,750.00
155-WE111*	7294205	Pivoting Front Fenders - Wide Width	M158928		2,064.00
		*Width depends on tire selection; see Chart Below			

Fender Size		
Standard	**Wide**	**Tire Sizes**
12.6" (320 mm)	13.9" (355 mm)	320/85R34 (12.4R34) 320/85R38 (12.4R38)
14.9" (380 mm)	16.1" (410 mm)	380/85R30 (14.9R30) 380/85R34 (14.9R34) 400/80R28
16.1" (410 mm)	18.5" (470 mm)	420/85R28 (16.9R28) 420/85R30 (16.9R30) 420/90R30
18.5" (470 mm)	20.4" (520 mm)	480/70R30
20.4" (520 mm)	24.4" (620 mm)	540/65R28 540/65R30
24.4" (620 mm)	27.5" (700 mm)	600/65R28 710/55R30

REAR FENDERS					
255-WD012	Base	Rear Fenders without Extensions, 78.74"(2.00 M) . . .			**In Base**
255-WD017	7293107	Wide Fender -90.55" (2.3 M) with Rear Extension . . .	M106029		1,377.00
255-WD020	7293109	Extra Wide Fender -100.4" (2.55 M) . . . . . with Rear Extension	M120813		1,569.00

(F.O.B. PORT OF ENTRY)

Order Code	Catalog Number	Description	Factory Code	Approx. Weight (lb.)	List Price
MISCELLANEOUS					
35-EN001	7293092	Creeper Gear (4:1 Reduction) **(Available on Dyna-6 Editions Only)** (Not compatible with Loader Provision and/or Front Hitch)	M197120		2,560.00
250-GS001	7293100	Hydraulic Trailer Brakes	M67452		876.00
250-GS067	7293552	Pneumatic and Hydraulic Trailer Brakes	M619465		8,045.00
275-TC005	7294210	French Language OIB			No Charge
275-TC011	7294211	Spanish Language OIB			No Charge
QUICK HITCH					
	5020455M	Quick Hitch, Category 3/3N (Installed at the Assembly Center) **(Available on Dyna-6 Editions Only)**	M177408		2,304.00
DEALER INSTALLED OPTIONS					
FRONT WEIGHTS					
BEAUVAIS BUILT					
	5020186M	8 x 55 kg (121 lbs.) Front Weights	M123739	968	1,607.00
	5020187M	10 x 55 kg (121 lbs.) Front Weights	M153230	1210	1,990.00
	5020188M	12 x 55 kg (121 lbs.) Front Weights	M189343	1452	2,459.00
	5020189M	14 x 55 kg (121 lbs.) Front Weights	M220913	1694	2,869.00
	5020190M	16 x 55 kg (121 lbs.) Front Weights	M252483	1936	3,279.00
JACKSON BUILT					
	5020186JM	8 x 55 kg (121 lbs.) Front Weights	M123739	968	1,607.00
	5020187JM	10 x 55 kg (121 lbs.) Front Weights	M153230	1210	1,990.00
	5020188JM	12 x 55 kg (121 lbs.) Front Weights	M182028	1452	2,364.00
	5020189JM	14 x 55 kg (121 lbs.) Front Weights	M212443	1694	2,759.00
	5020190JM	16 x 55 kg (121 lbs.) Front Weights	M242704	1936	3,152.00

(F.O.B. PORT OF ENTRY)

Order Code	Catalog Number	Description	Factory Code	Approx. Weight (lb.)	List Price

TIRES for 7720S and 7722S with Dyna-6 Transmission

TIRE BRAND SELECTION

70-Blank	7294212	Factory Brand Choice			No Charge
70-T0001	7294195	Michelin Brand Required	M150150		1,950.00
70-T0007	7294197	Firestone Brand Required	M94633		1,229.00
70-T0010	7294198	Trelleborg Brand Required	M94633		1,229.00

FRONT AND REAR TIRES

Rear: Single Welded Pressed Steel - Set of 2
Front: Fixed Welded Steel Rim

75-W1585	7294857B3 7294793B1	Rear: 710/70R38 R1W (MI, TR) Front: 600/65R28 R1W (MI, TR)	M351736		4,568.00
75-W1718	7294880B3 7294793B1	Rear: 650/65R42 R1W (MI, TR) Front: 600/65R28 R1W (MI, TR)	M339493		4,409.00

Rear: Single Semi Dished Cast Centers- Set of 2
Front: Waffle Wheel

75-Base	7294882B3 7294762B1	Rear: 480/80R42 R1W (18.4R42 R1W) (MI, TR) Front: 420/85R28 R1W (16.9R28 R1W) (MI, TR)			**In Base**
75-W1377	7294882B3 7294765B1	Rear: 480/80R42 R1W (18.4R42 R1W) (MI, TR) Front: 380/85R30 R1W (14.9R30 R1W) (MI, TR)	(M51205)		(665.00)
75-W1485	7294870B3 7294766B1	Rear: 520/85R42 R1W (20.8R42 R1W) (MI, TR) Front: 420/85R30 R1W (16.9R30 R1W) (MI, TR)	M74382		966.00
75-W1398	7294870B3 7294770B1	Rear: 520/85R42 R1W (20.8R42 R1W) (MI, TR) Front: 380/85R34 R1W (14.9R34 R1W) (MI, TR)	M90706		1,178.00
75-W1626	7294871B3 7294766B1	Rear: 480/80R46 R1W (18.4R46 R1W) (MI, TR) Front: 420/85R30 R1W (16.9R30 R1W) (MI, TR)	M48048		624.00
75-W1413	7294871B3 7294767B1	Rear: 480/80R46 R1W (18.4R46 R1W) (MI) Front: 420/90R30 R1W (MI)	M85316		1,108.00
75-W1349	7294871B3 7294770B1	Rear: 480/80R46 R1W (18.4R46 R1W) (MI, TR) Front: 380/85R34 R1W (14.9R34 R1W) (MI, TR)	M64372		836.00
75-W1802	7294911B3 7294770B1	Rear: 380/90R50 R1W (FI) Front: 380/85R34 R1W (14.9R34 R1W) FI	M127820		1,660.00
75-W1354	7294875B3 7294773B1	Rear: 320/90R54 R1W (MI) Front: 320/85R38 R1W (MI)	M275044		3,572.00

(F.O.B. PORT OF ENTRY)

TIRES for 7720S and 7722S with Dyna-6 Transmission

FRONT AND REAR TIRES - CONTINUED

Order Code	Catalog Number	Description	Factory Code	Approx. Weight (lb.)	List Price
		Rear: Dual Cast Inner / Steel Outer - Set of 4			
		Front: Waffle Wheel			
75-W1386	7294886B3	Duals: 480/80R42 R1W (18.4R42 R1W) (MI, TR)	M554477		7,201.00
	7294762B1	Front: 420/85R28 R1W (16.9R28 R1W) (MI, TR)			
75-W1380	7294886B3	Duals: 480/80R42 R1W (18.4R42 R1W) (MI, TR)	M503272		6,536.00
	7294765B1	Front: 380/85R30 R1W (MI, TR)			
75-W1596	7294863B3	Duals: 520/85R42 R1W (20.8R42 R1W) (MI, TR)	M771078		10,014.00
	7294766B1	Front: 420/85R30 R1W (16.9R30 R1W) (MI, TR)			
75-W1391	7294863B3	Duals: 520/85R42 R1W (20.8R42 R1W) (MI)	M808346		10,498.00
	7294767B1	Front: 420/90R30 R1W (MI)			
75-W1399	7294863B3	Duals: 520/85R42 R1W (20.8R42 R1W) (MI, TR)	M787402		10,226.00
	7294770B1	Front: 380/85R34 R1W (14.9R34 R1W) (MI, TR)			
75-W1627	7294864B3	Duals: 480/80R46 R1W (18.4R46 R1W) (MI, TR)	M725571		9,423.00
	7294766B1	Front: 420/85R30 R1W (16.9R30 R1W) (MI, TR)			
75-W1414	7294864B3	Duals: 480/80R46 R1W (18.4R46 R1W) (MI)	M762839		9,907.00
	7294767B1	Front: 420/90R30 R1W (MI)			
75-W1401	7294864B3	Duals: 480/80R46 R1W (18.4R46 R1W) (MI, TR)	M741895		9,635.00
	7294770B1	Front: 380/85R34 R1W (14.9R34 R1W) (MI, TR)			
75-W1745	7294866B3	Duals: 380/90R50 R1W (14.9R50 R1W) (FI)	M681296		8,848.00
	7294770B1	Front: 380/85R34 R1W (14.9R34 R1W) (FI)			
75-W1404	7294868B3	Duals: 320/90R54 R1W (MI)	M790251		10,263.00
	7294773B1	Front: 320/85R38 R1W (MI)			
		Rear: Dual Cast Inner / Steel Outer - Set of 4			
		Front: Welded Wheel			
75-W1821	7294863B3	Duals: 520/85R42 R1W (20.8R42 R1W) (MI, TR)	M996380		12,940.00
	7294793B1	Front: 600/65R28 R1W (MI, TR)			

(F.O.B. PORT OF ENTRY)

Order Code	Catalog Number	Description	Factory Code	Approx. Weight (lb.)	List Price

TIRES for 7724S and 7726S with Dyna-6 Transmission

TIRE BRAND SELECTION

70-Blank	7294212	Factory Brand Choice			No Charge
70-T0001	7294195	Michelin Brand Required	M150150		1,950.00
70-T0007	7294197	Firestone Brand Required	M94633		1,229.00
70-T0010	7294198	Trelleborg Brand Required	M94633		1,229.00

FRONT AND REAR TIRES

Rear: Single Welded Pressed Steel - Set of 2
Front: Fixed Welded Steel Rim

75-W1585	7294857B2 7294793	Rear: 710/70R38 R1W (MI, TR) Front: 600/65R28 R1W (MI, TR)	M266343		3,459.00
75-W1587	7294859B2 7294794	Rear: 710/70R42 R1W (MI, TR) Front: 600/70R28 R1W (MI, TR)	(M110495)		(1,435.00)
75-W1718	7294880B2 7294793	Rear: 650/65R42 R1W (MI, TR) Front: 600/65R28 R1W (MI, TR)	M258412		3,356.00

Rear: Single Semi Dished Cast Centers- Set of 2
Front: Waffle Wheel

75-Base	7294871B2 7294767	Rear: 480/80R46 R1W (18.4R46 R1W) (MI) Front: 420/90R30 R1W (MI)			**In Base**
75-W1485	7294870B2 7294766	Rear: 520/85R42 R1W (20.8R42 R1W) (MI, TR) Front: 420/85R30 R1W (16.9R30 R1W) (MI, TR)	(M09933)		(129.00)
75-W1398	7294870B2 7294770	Rear: 520/85R42 R1W (20.8R42 R1W) (MI, TR) Front: 380/85R34 R1W (14.9R34 R1W) (MI, TR)	M06006		78.00
75-W1384	7294882B2 7294762	Rear: 480/80R42 R1W (18.4R42 R1W) (MI, TR) Front: 420/85R28 (16.9R28 R1W) R1W (MI, TR)	(M82852)		(1,076.00)
75-W1377	7294882B2 7294765	Rear: 480/80R42 R1W (18.4R42 R1W) (MI, TR) Front: 380/85R30 (14.9R30) R1W (MI, TR)	(M134057)		(1,741.00)
75-W1626	7294871B2 7294766	Rear: 480/80R46 R1W (18.4R46 R1W) (MI, TR) Front: 420/85R30 (16.9R30) R1W (MI, TR)	(M36344)		(472.00)
75-W1349	7294871B2 7294770	Rear: 480/80R46 R1W (18.4R46 R1W) (MI, TR) Front: 380/85R34 (14.9R34) R1W (MI, TR)	(M20405)		(265.00)

(F.O.B. PORT OF ENTRY)

Order Code	Catalog Number	Description	Factory Code	Approx. Weight (lb.)	List Price

TIRES for 7724S and 7726S with Dyna-6 Transmission

FRONT AND REAR TIRES - CONTINUED

		Rear: Dual Cast Inner / Steel Outer - Set of 4 ***Front: Waffle Wheel***			
75-W1386	7294886B2 7294762	Duals: 480/80R42 R1W (18.4R42 R1W) (MI, TR) . . . . Front: 420/85R28 R1W (16.9R28 R1W) (MI, TR)	M470162		6,106.00
75-W1380	7294886B2 7294765	Duals: 480/80R42 R1W (18.4R42 R1W) (MI, TR) . . . . Front: 380/85R30 R1W (MI, TR)	M418957		5,441.00
75-W1596	7294863B2 7294766	Duals: 520/85R42 R1W (20.8R42 R1W) (MI, TR) . . . . Front: 420/85R30 R1W (16.9R30 R1W) (MI, TR)	M686763		8,919.00
75-W1399	7294863B2 7294770	Duals: 520/85R42 R1W (20.8R42 R1W) (MI, TR) . . . . Front: 380/85R34 R1W (14.9R34 R1W) (MI, TR)	M702702		9,126.00
75-W1627	7294864B2 7294766	Duals: 480/80R46 R1W (18.4R46 R1W) (MI, TR) . . . . Front: 420/85R30 R1W (16.9R30 R1W) (MI, TR)	M641179		8,327.00
75-W1414	7294864B2 7294767	Duals: 480/80R46 R1W (18.4R46 R1W) (MI) . . . . . Front: 420/90R30 R1W (MI)	M677523		8,799.00
75-W1401	7294864B2 7294770	Duals: 480/80R46 R1W (18.4R46 R1W) (MI, TR) . . . . Front: 380/85R34 R1W (14.9R34 R1W) (MI, TR)	M657118		8,534.00
75-W1404	7294868B2 7294773	Duals: 320/90R54 R1W (MI) . . . . . Front: 320/85R38 R1W (MI)	M704935		9,155.00
75-W1745	7294866B2 7294770	Duals: 380/90R50 R1W (14.9R50 R1W) (FI) . . . . . Front: 380/85R34 R1W (14.9R34 R1W) (FI)	M596365		7,745.00
75-W1391	7294863B2 7294767	Duals: 520/85R42 R1W (20.8R42 R1W) (MI) . . . . . Front: 420/90R30 R1W (MI)	M723107		9,391.00
		Rear: Dual Cast Inner / Steel Outer - Set of 4 ***Front: Welded Wheel***			
75-W1821	7294863B2 7294793	Duals: 520/85R42 R1W (20.8R42 R1W) (MI, TR) . . . . Front: 600/65R28 R1W (MI, TR)	M911064		11,832.00

(F.O.B. PORT OF ENTRY)

Order Code	Catalog Number	Description	Factory Code	Approx. Weight (lb.)	List Price

TIRES for 7720S and 7722S with Dyna-VT Transmission

TIRE BRAND SELECTION

70-Blank	7294212	Factory Brand Choice			No Charge
70-T0001	7294195	Michelin Brand Required	M150150		1,950.00
70-T0002	7294196	Goodyear Brand Required	M94633		1,229.00
70-T0007	7294197	Firestone Brand Required	M94633		1,229.00
70-T0010	7294198	Trelleborg Brand Required	M94633		1,229.00

FRONT AND REAR TIRES*

***11 weeks out for changes on Jackson Built Models**

Rear: Single Welded Pressed Steel - Set of 2
Front: Fixed Welded Steel Rim

75-W1585	7294857B3 7294793B1	Rear: 710/70R38 R1W (MI, FI, TR) Front: 600/65R28 R1W (MI, FI, TR)	M351736		4,568.00
75-W1718	7294880B3 7294793B1	Rear: 650/65R42 R1W (MI, FI, TR) Front: 600/65R28 R1W (MI, FI, TR)	M339493		4,409.00

Rear: Single Semi Dished Cast Centers- Set of 2
Front: Waffle Wheel

75-Base	7294882B3 7294762B1	Rear: 480/80R42 R1W (18.4R42 R1W) (MI, FI, TR) Front: 420/85R28 R1W (16.9R28 R1W) (MI, FI, TR)			**In Base**
75-W1377	7294882B3 7294765B1	Rear: 480/80R42 R1W (18.4R42 R1W) (MI, FI, TR) Front: 380/85R30 R1W (MI, FI, TR)	(M51205)		(665.00)
75-W1485	7294870B3 7294766B1	Rear: 520/85R42 R1W (20.8R42 R1W) (MI, GY, TR) Front: 420/85R30 R1W (16.9R30 R1W) (MI, GY, TR)	M74382		966.00
75-W1325	7294870B3 7294767B1	Rear: 520/85R42 R1W (20.8R42 R1W) (MI, TR) Front: 420/90R30 R1W (MI, TR)	M111650		1,450.00
75-W1398	7294870B3 7294770B1	Rear: 520/85R42 R1W (20.8R42 R1W) (MI, GY, TR) Front: 380/85R34 R1W (14.9R34 R1W) (MI, GY, TR)	M90706		1,178.00
75-W1626	7294871B3 7294766B1	Rear: 480/80R46 R1W (18.4R46 R1W) (MI, GY, TR) Front: 420/85R30 R1W (16.9R30 R1W) (MI, GY, TR)	M48048		624.00
75-W1413	7294871B3 7294767B1	Rear: 480/80R46 R1W (18.4R46 R1W) (MI) Front: 420/90R30 R1W (MI)	M85316		1,108.00
75-W1349	7294871B3 7294770B1	Rear: 480/80R46 R1W(18.4R46 R1W)(MI, FI, TR) Front: 380/85R34 R1W (14.9R34 R1W) (MI, FI, TR)	M64372		836.00
75-W1862	7294921B3 7294924B1	Rear: VF480/80R46 (MI) Front: VF380/85R34 (MI)	M319088		4,144.00
75-W1802	7294911B3 7294770B1	Rear: 380/90R50 R1W (FI, GY) Front: 380/85R34 R1W (14.9R34 R1W) (FI, GY)	M127820		1,660.00
75-W1354	7294875B3 7294773B1	Rear: 320/90R54 R1W (MI, FI, GY) Front: 320/85R38 R1W (MI, FI, GY)	M275044		3,572.00

(F.O.B. PORT OF ENTRY)

TIRES for 7720S and 7722S with Dyna-VT Transmission

FRONT AND REAR TIRES - CONTINUED*

***11 weeks out for changes on Jackson Built Models**

Order Code	Catalog Number	Description	Factory Code	Approx. Weight (lb.)	List Price
		Rear: Dual Cast Inner / Steel Outer - Set of 4 ***Front: Waffle Wheel***			
75-W1386	7294886B3 7294762B1	Duals: 480/80R42 R1W (18.4R42 R1W) (MI, FI, TR) Front: 420/85R28 R1W (16.9R28 R1W) (MI, FI, TR)	M554477		7,201.00
75-W1380	7294886B3 7294765B1	Duals: 480/80R42 R1W (18.4R42 R1W) (MI, FI, TR) Front: 380/85R30 R1W (MI, FI, TR)	M503272		6,536.00
75-W1596	7294863B3 7294766B1	Duals: 520/85R42 R1W (20.8R42 R1W) (MI, GY, TR) Front: 420/85R30 R1W (16.9R30 R1W) (MI, GY, TR)	M771078		10,014.00
75-W1391	7294863B3 7294767B1	Duals: 520/85R42 R1W (20.8R42 R1W) (MI, TR) Front: 420/90R30 R1W (MI, TR)	M808346		10,498.00
75-W1399	7294863B3 7294770B1	Duals: 520/85R42 R1W (20.8R42 R1W) (MI, GY, TR) Front: 380/85R34 R1W (14.9R34 R1W) (MI, GY, TR)	M787402		10,226.00
75-W1627	7294864B3 7294766B1	Duals: 480/80R46 R1W (18.4R46 R1W) (MI, GY, TR) Front: 420/85R30 R1W (16.9R30 R1W) (MI, GY, TR)	M725571		9,423.00
75-W1414	7294864B3 7294767B1	Duals: 480/80R46 R1W (18.4R46 R1W) (MI) Front: 420/90R30 R1W (MI)	M762839		9,907.00
75-W1401	7294864B3 7294770B1	Duals: 480/80R46 R1W (18.4R46 R1W) (MI, FI, TR) Front: 380/85R34 R1W (14.9R34 R1W) (MI, FI, TR)	M741895		9,635.00
75-W1864	7294919B3 7294924B1	Duals: VF480/80R46 R1W (MI). Front: VF380/85R34 R1W (MI)	M11242		14,600.00
75-W1745	7294866B3 7294770B1	Duals: 380/90R50 R1W (14.9R50 R1W) (FI, GY) Front: 380/85R34 R1W (14.9R34 R1W) (FI, GY)	M681296		8,848.00
75-W1404	7294868B3 7294773B1	Duals: 320/90R54 R1W (MI, FI, GY) Front: 320/85R38 R1W (MI, FI, GY)	M790251		10,263.00
		Rear: Dual Cast Inner / Steel Outer - Set of 4 ***Front: Welded Wheel***			
75-W1821	7294863B3 7294793B1	Duals: 520/85R42 R1W (20.8R42 R1W)(MI,FI,GY,TR) Front: 600/65R28 R1W (MI, FI, GY, TR)	M996380		12,940.00

(F.O.B. PORT OF ENTRY)

Order Code	Catalog Number	Description	Factory Code	Approx. Weight (lb.)	List Price

TIRES for 7724S and 7726S with Dyna-VT Transmission

TIRE BRAND SELECTION

70-Blank	7294212	Factory Brand Choice			No Charge
70-T0001	7294195	Michelin Brand Required	M150150		1,950.00
70-T0002	7294196	Goodyear Brand Required	M94633		1,229.00
70-T0007	7294197	Firestone Brand Required	M94633		1,229.00
70-T0010	7294198	Trelleborg Brand Required	M94633		1,229.00

FRONT AND REAR TIRES

***11 weeks out for changes on Jackson Built Models**

Rear: Single Welded Pressed Steel - Set of 2
Front: Fixed Welded Steel Rim

75-W1585	7294857B2 7294793	Rear: 710/70R38 R1W (MI, FI, TR) Front: 600/65R28 R1W (MI, FI, TR)	M266343		3,459.00
75-W1718	7294880B2 7294793	Rear: 650/65R42 R1W (MI, FI, GY, TR) Front: 600/65R28 R1W (MI, FI, GY, TR)	M258412		3,356.00

Rear: Single Semi Dished Cast Centers- Set of 2
Front: Waffle Wheel

75-Base	7294871B2 7294767	Rear: 480/80R46 R1W (18.4R46 R1W) (MI) Front: 420/90R30 R1W (MI)			**In Base**
75-W1384	7294882B2 7294762	Rear: 480/80R42 R1W (18.4R42 R1W) (MI, FI, TR) Front: 420/85R28 (16.9R28 R1W) R1W (MI, FI, TR)	(M82852)		(1,076.00)
75-W1377	7294882B2 7294765	Rear: 480/80R42 R1W (18.4R42 R1W) (MI, FI, TR) Front: 380/85R30 (14.9R30) R1W (MI, FI, TR)	(M134057)		(1,741.00)
75-W1485	7294870B2 7294766	Rear: 520/85R42 R1W (20.8R42 R1W) (MI, GY, TR) Front: 420/85R30 R1W (16.9R30 R1W) (MI, GY, TR)	(M09933)		(129.00)
75-W1325	7294870B2 7294767	Rear: 520/85R42 R1W (20.8R42 R1W) (MI, TR) Front: 420/90R30 R1W (MI, TR)	M26411		343.00
75-W1398	7294870B2 7294770	Rear: 520/85R42 R1W (20.8R42 R1W) (MI, GY, TR) Front: 380/85R34 (14.9R34) R1W (MI, GY, TR)	M06006		78.00
75-W1626	7294871B2 7294766	Rear: 480/80R46 R1W (18.4R46 R1W) (MI, GY, TR) Front: 420/85R30 (16.9R30) R1W (MI, GY, TR)	(M36344)		(472.00)
75-W1349	7294871B2 7294770	Rear: 480/80R46 R1W (18.4R46 R1W) (MI, FI, TR) Front: 380/85R34 (14.9R34) R1W (MI, FI, TR)	(M20405)		(265.00)
75-W1862	7294921B2 7294924	Rear: VF480/80R46 (MI) Front: VF380/85R34 (MI)	M233926		3,038.00

(F.O.B. PORT OF ENTRY)

TIRES for 7724S and 7726S with Dyna-VT Transmission

FRONT AND REAR TIRES - CONTINUED

***11 weeks out for changes on Jackson Built Models**

Order Code	Catalog Number	Description	Factory Code	Approx. Weight (lb.)	List Price
		Rear: Dual Cast Inner / Steel Outer - Set of 4 ***Front: Waffle Wheel***			
75-W1386	7294886B2 7294762	Duals: 480/80R42 R1W (18.4R42 R1W) (MI, FI, TR) . . Front: 420/85R28 R1W (16.9R28 R1W) (MI, FI, TR)	M470162		6,106.00
75-W1380	7294886B2 7294765	Duals: 480/80R42 R1W (18.4R42 R1W) (MI, FI, TR) . . Front: 380/85R30 R1W (MI, FI, TR)	M418957		5,441.00
75-W1596	7294863B2 7294766	Duals: 520/85R42 R1W (20.8R42 R1W) (MI, GY, TR) . Front: 420/85R30 R1W (16.9R30 R1W) (MI, GY, TR)	M686763		8,919.00
75-W1391	7294863B2 7294767	Duals: 520/85R42 R1W (20.8R42 R1W) (MI, TR) . . . . Front: 420/90R30 R1W (MI, TR)	M723107		9,391.00
75-W1399	7294863B2 7294770	Duals: 520/85R42 R1W (20.8R42 R1W) (MI, GY, TR) . Front: 380/85R34 R1W (14.9R34 R1W) (MI, GY, TR)	M702702		9,126.00
75-W1627	7294864B2 7294766	Duals: 480/80R46 R1W (18.4R46 R1W) (MI, GY, TR) . . Front: 42085R30 R1W (16.9R30 R1W) (MI, GY, TR)	M641179		8,327.00
75-W1414	7294864B2 7294767	Duals: 480/80R46 R1W (18.4R46 R1W) (MI) . . . . . Front: 420/90R30 R1W (MI)	M677523		8,799.00
75-W1401	7294864B2 7294770	Duals: 480/80R46 R1W (18.4R46 R1W) (MI, FI, TR) . . Front: 380/85R34 R1W (14.9R34 R1W) (MI, FI, TR)	M657118		8,534.00
75-W1864	7294919B2 7294924	Duals: VF480/80R46 R1W (MI). . . . . Front: VF380/85R34 R1W (MI)	M1038884		13,492.00
75-W1745	7294866B2 7294770	Duals: 380/90R50 R1W (14.9R50 R1W) (FI, GY) . . . . Front: 380/85R34 R1W (14.9R34 R1W) (FI, GY)	M596365		7,745.00
75-W1404	7294868B2 7294773	Duals: 320/90R54 R1W (MI, FI, GY) . . . . . Front: 320/85R38 R1W (MI, FI, GY)	M704935		9,155.00
		Rear: Dual Cast Inner / Steel Outer - Set of 4 ***Front: Welded Wheel***			
75-W1821	7294863B2 7294793	Duals: 520/85R42 R1W (20.8R42 R1W) (MI,FI,GY,TR) . Front: 600/65R28 R1W (MI, FI, GY, TR)	M911064		11,832.00

MASSEY FERGUSON®

MF8700S SERIES

Jackson Built
Possible Order Modifications in Weeks

	> 18	16 - 18	14 - 16	10 -14	6 - 10
Massey Ferguson Guide	o	o	o	X	X
Front Axle/Rear Axle Type	o	0	X	X	X
Air Conditioning/Heater	o	o	X	X	X
Cab Audio	o	o	o	o	o
Front Fenders	o	o	o	o	o
Front Weights	o	o	o	o	o
Hydraulic/Pneumatic Trailer Brake	o	o	X	X	X
Hydraulic Remotes	o	o	o	X	X
Rear Fenders	o	o	o	X	X
Rear Linkage & PTO	o	o	X	X	X
Seat	o	o	o	X	X
Wheel & Tires	o	o	X	X	X
Working Lights & Mirrors	o	o	o	X	X

= Components can be requested to be modified.

X = Components are frozen and cannot be modified.

*Dates subject to change without notice.

Guidelines for Availability and Order Changes

These charts list the possible change requests that can be made to the listed components through e-Ordering. The information provided is built off of the Scheduled Completion Date.

***Scheduled Completion Date; Not the Planned Available To Ship (PATS) Date**

MASSEY FERGUSON®

STANDARD EQUIPMENT

F.O.B. JACKSON, MN

MODEL
MF8727S: 270 Max Engine HP, 240 Rated Engine HP, 205 PTO HP
MF8730S: 295 Max Engine HP, 265 Rated Engine HP, 225 PTO HP
MF8732S: 320 Max Engine HP, 290 Rated Engine HP, 250 PTO HP
MF8735S: 350 Max Engine HP, 320 Rated Engine HP, 275 PTO HP
MF8737S: 370 Max Engine HP, 340 Rated Engine HP, 290 PTO HP
MF8740S: 400 Max Engine HP, 380 Rated Engine HP, 325 PTO HP

AP84-4: AGCO POWER™ 8.4L Tier 4F, 6 Cylinder Engine
Air-To-Air Aftercooled, Common Rail Injection, Twin Turbocharged
Electronic Engine Management (EEM4F) with Dual ERPM Settings
Suction Type Viscous Fan
Venturi-Type Engine Air Pre-Cleaner
Two-Stage Cassette-Type Engine Air Filter
Side Mounted Muffler with Integrated SCR Catalyst
(Mounted on Right Hand Corner of Cab)
Fuel Tank Capacity: 167 Gal (630L)
DEF Tank Capacity: 16 Gal (60L)
Two Fuel Filters
Water Separator (Fuel Filter)
Automatic Starting Aid, Intake Grid Heater
CYCLAIR Cooling Package

POWERTRAIN
Dyna-VT Transmission 31 MPH (50 KPH), 60 ft/h (18.2 meter/hour)
Dynamic Tractor Management (DTM) with
Two Programmable Cruise Speeds
10” Multi-Disc Wet Brakes
- High Pressure Power Assisted
- Electro Hydraulic Park Brake (Park Lock)

Power Differential Lock
1000E/1000 RPM PTO, 1 ¾" 20 Spline Shaft
Rear Fender Mounted PTO Engage/Disengage
118" (2997mm) long, 4.33" (110mm) Diameter Rear Bar Axle

FRONT WHEEL ASSIST AXLE
Suspended Reinforced Power Front Axle (PFA)
Shielded Center Drive Line with Electro-Hydraulic Control
& Front Wheel Drive Differential Lock
55 Degree Steering Angle
SpeedSteer Quick Steering

HYDRAULICS
Closed Center 54 GPM (205L/Min) Pump
2900 PSI (200 Bar) Maximum Pressure
4 Electro-Hydraulic Valves, 2 Fingertip Controlled, 2 Joystick Controlled,
Flow And Timing Controlled Through Center Display Display (CCD)
Hydrostatic Power Steering

3-POINT HITCH & DRAWBAR
3-Point Hitch: with Category III/IVN Quick Hitch
Drawbar: Category III with Clevis and Drop Pin
Sway Block Stabilizers

ELECTRICAL SYSTEM
Two 12V, 120 amp Alternators
Two 12 Volt Batteries, 775 CCA each (SAE)
7-Pin Trailer Connector
Electrical Isolator Switch and Jumpstart Point
Automatic Battery Shutoff (30 Minutes)
Two 3 Pin 12V Power Outlets

LIGHTING
6 Front Hood Mounted Single Bulb Worklights
4 Headlights
4 Cab Mounted Single Bulb Front Worklights,
2 Cab Mounted Double Bulb Rear Worklights
Fold-Out Extremity Warning Lights
2 Roof Mounted Rotating Beacons

INSTRUMENTS
Datatronic 5 - Control Center Display (CCD)
Video Input
Electric Valve Control
ISOBUS Compliant
Color & Digital Dash Display
SIS (Setup & Information Screen)
Tachometer: Digital and Analog
PTO Speed: Digital
Ground Speed Display: Digital
Fuel Level, DEF Level, and Coolant Temp Gauges
Warning/Information Lights

OPERATOR AREA
4-Post Panorama Cab
T-Handle Transmission Control on Armrest
OptiRide Plus Cab Suspension
Adjustable Steering Column
Front, Side and Rear Sun Visors
Air Conditioning and Heater - Manual
Superluxe Grammar Seat - Air Suspended, Heated Seat
Front And Rear Windshield Wiper/Washer
Telescoping Wide Angle Mirrors with Electric Adjustable Side Mirrors
with Electric De-icing
Single Inside Rear View Mirror
4 Audio Speakers
AM/FM, Bluetooth, Radio with CD Player, Antenna & Speakers
(MP3 Compatible)
(Requires Extra Microphone for Bluetooth Mobile Phone Calls.)
Magnetic Ashtray
Control Panel & 3-Point Hitch Controls on Right Hand Pillar

WHEELS AND TIRES
MF8727S / MF8730S
Rear 480/80R46 R1W Dual Wheels, Cast Inner/Steel Outer
Front 420/90R30 R1W Single Waffle Wheels
MF8732S / MF8735S / MF8737S
Rear 480/80R50 R1W Dual Wheels, Cast Inner/Steel Outer
Front 420/85R34 R1W Single Waffle Wheels
Standard Pivoting Front Fenders
Power Beyond with P/T/LS/D Couplers

OTHER STANDARD FEATURES
Massey Ferguson Connect
Equipped with Antenna, Bracket, Harness and Module.
(5 Year Subscription, Must be activated within 12 months of warranty registration)
Massey Ferguson Guide with NovAtel Reciever (Verizon)
TaskDoc (Wireless Data Transfer)
Lockable Tool Box
SMV & SIS Sign
Molded Rear Fenders 2.10m
Integrated Belly Weight with Front Weight Carrier
Fender Mounted External Lift Control on Both Sides
with External Spool Valve Control
English Literature

MF8740S - NOT FOR SALE IN STATE OF NEBRASKA

Order Code	Catalog Number	Description	Factory Code	Approx. Weight (lb.)	List Price
BASE MACHINE					
MF8727S	7294336	Massey Ferguson 8727S - 205 PTO HP 4WD Tractor	M22952853		298,089.00
MF8730S	7294337	Massey Ferguson 8730S - 225 PTO HP 4WD Tractor	M24814559		322,267.00
MF8732S	7294338	Massey Ferguson 8732S - 250 PTO HP 4WD Tractor	M26483149		343,937.00
MF8735S	7294339	Massey Ferguson 8735S - 275 PTO HP 4WD Tractor	M28387359		368,667.00
MF8737S	7294340	Massey Ferguson 8737S - 290 PTO HP 4WD Tractor	M30725541		399,033.00
MF8740S	7294341	Massey Ferguson 8740S - 325 PTO HP 4WD Tractor	M32883389		427,057.00
PERFORMANCE PACKAGES					
315-MPP8008	7294323	Performance Bundle Includes: MU051 3rd, 4th, 5th, & 6th Electric, Fingertip Controlled Valves LA036 540E/1000 RPM Flanged PTO, 6, 20 & 21 spline CB002 Engine Block Heater	M333564		4,332.00
315-MPP8009	7294324	Performance Bundle Includes: MU051 3rd, 4th, 5th, & 6th Electric, Fingertip Controlled Valves LA105 1000E/1000 RPM Flanged PTO, 20 & 21 spline CB002 Engine Block Heater	M333564		4,332.00
LUXURY PACKAGE					
320-MLP8010	7294328	Luxury Bundle Includes: AQ004 Automatic Climate Control AE087 Maximo Evolution Premium Leather Package A0149 4 LED Front Roof Worklights, 2 LED Rear Roof Worklights and LED Worklights in Front Hood, Handrails and Rear Fenders with Roadlamps	M617925		8,025.00
TRANSMISSION*					
25-EA622	Base	Dyna-VT Transmission- 31 mph (50 KPH) with Heavy Duty Suspended Front Axle			**In Base**
25-A7035	7294255	Dyna-VT Transmission - 25 mph (40 KPH) with Heavy Duty Fixed Front Axle	(M1214983)		(15,779.00)
TRANSMISSION CONTROL					
30-EC008	Base	"T" Lever Control on Armrest			**In Base**
30-EC022	7294256	MultiPad Joystick	M157311		2,043.00
CAB SUSPENSION					
115-AM117	Base	OptiRide Plus Suspension			**In Base**
115-AM015	7294244	No Cab Suspension	(M393855)		(5,115.00)

***Heavy Duty Fixed / Suspended Front Axles are not compatible with 28" and 30" Waffle Rims with 60" and 64" tread settings when or-dering Pivoting Front Fenders.**

MASSEY FERGUSON®

Order Code	Catalog Number	Description	Factory Code	Approx. Weight (lb.)	List Price
CAB SEAT					
125-AE042	Base	Superluxe Grammar Seat			**In Base**
125-AE087	7294278	Maximo Evolution Premium Leather Package, Includes: Leather Operator Seat Leather Instructor Seat Leather Wrapped Steering Wheel	M313313		4,069.00
MASSEY FERGUSON GUIDE					
300-XR342	7294348	Massey Ferguson Guide Standard (Verizon) with Novatel Smart7 Receiver Pass-to-Pass Accuracy of +/- 20 cm (+/- 8 inch) For correction signal WAAS (no subscription needed)			**In Base**
300-XR346	7294347	Massey Ferguson Guide Standard (Verizon) Trimble® AG-382 Receiver Pass-to-Pass Accuracy of +/- 20 cm (+/- 8 inch) For correction signal WAAS (no subscription needed)	M61600		800.00
300-XR302	7294345	Massey Ferguson Guide Standard (GSM) with Novatel Smart7 Receiver Pass-to-Pass Accuracy of +/- 20 cm (+/- 8 inch) For correction signal WAAS (no subscription needed)			No Charge
300-XR306	7294344	Massey Ferguson Guide Standard (GSM) Trimble® AG-382 Receiver Pass-to-Pass Accuracy of +/- 20 cm (+/- 8 inch) For correction signal WAAS (no subscription needed)	M61600		800.00
300-XR341	7294346	Massey Ferguson Guide Basic Package (Verizon) Verizon cellular network when using NTRIP and Task Doc Pro	(M173250)		(2,250.00)
300-XR301	7294343	Massey Ferguson Guide Ready Package (GSM) Suggested for Canada and US where Verizon is not preferred when using NTRIP and Task Doc Pro	(M173250)		(2,250.00)
TELEMETRY					
160-BS119*	7295624	Massey Ferguson Basic Package (Verizon) Verizon cellular network when using Massey Ferguson Connect			In Base
160-BS019*	7295622	Massey Ferguson Basic Package (GSM) Suggested for Canada and US where Verizon is not preferred when using Massey Ferguson Connect			No Charge
AUXILIARY VALES 1 & 2					
50-KX012	Base	Valves 1 and 2 Electric, with Multi-Function Joystick on the Armrest			**In Base**
AUXILIARY VALVE 3, 4, 5 & 6					
55-MU031	Base	3rd and 4th Electric, Fingertip Controlled Valves with Fingertips located on Right Hand Console			**In Base**
55-MU051	7294258	3rd, 4th, 5th, & 6th Electric, Fingertip Controlled Valves with Fingertips located on Right Hand Console	M293601		3,813.00
PTO- WITH IN CAB CONTROL					
100-LA104	Base	1000E/1000 RPM Flanged PTO, 20 Spline Shaft Included.			**In Base**
100-LA098	7294213	540E/1000 RPM Flanged PTO, 20 Spline Shaft Included.			No Charge
100-LA105*	7294214	1000E/1000 RPM Flanged PTO, 20 & 21 Spline Shaft Included	M22869		297.00
100-LA036*	7294215	540E/1000 RPM Flanged PTO, 6, 20 & 21 Spline Shaft Included	M22869		297.00

*** 5 YEAR SUBSCRIPTION, MUST BE ACTIVATED WITHIN 12 MONTHS OF WARRANTY REGISTRATION**

***(Not offered with Factory Installed Cat 4 Drawbar. Order additional shafts from Parts)**

Order Code	Catalog Number	Description	Factory Code	Approx. Weight (lb.)	List Price
FACTORY INSTALLED OPTIONS					
OPERATORS AREA					
120-AQ004	7294167	Automatic Climate Control	M89474		1,162.00
WORKLIGHTS					
190-Base	Base	4 Single Bulb Front Worklights, 2 Double Rear Roof Worklights and Worklights on Handrails and Rear Fenders			**In Base**
190-A0149	7294329	4 LED Front Roof Worklights,2 LED Rear Roof Worklights and LED Worklights in Front Hood, Handrails and Rear Fenders with Roadlamps	M215138		2,794.00
PIVOTING ADJUSTABLE FRONT FENDERS					
155-WE110	Base*	Standard Pivoting Front Fenders			**In Base**
155-WE111	7293598*	Wide Pivoting Front Fenders	M24871		323.00
INTEGRATED FRONT LINKAGE SYSTEM (IFLS)					
230-FA000	Base	Integrated Belly Weight, Front Weight Carrier, Less Front Hitch			**In Base**
230-F1136	7294262	5000 kg. (11,023 lbs.) Front Linkage, Two Sets of Hydraulic Couplers and Free Return Coupler	M805112		10,456.00
230-F1137	7294263	5000 kg. (11,023 lbs.) Front Linkage, Two Sets of Hydraulic Couplers and Free Return Coupler with 345kg Front Belly Weight	M958881		12,453.00
230-F1313	7294264	5000 kg. (11,023 lbs.) Front Linkage, Two Sets of Hydraulic Couplers and Free Return Coupler with Front PTO Anti-Clockwise rotation and 21 spline shaft (1000 rpm)	M1480633		19,229.00
THREE POINT HITCH					
85-GC210*	Base	Category III Fixed Top & Lower Links with Category III/IVN Quick Hitch			**In Base**
85-GC209	7294146	Category III Fixed Top and Lower Links	(M122507)		(1,591.00)

***Heavy Duty Fixed / Suspended Front Axles are not compatible with 28" and 30" Waffle Rims with 60" and 64" tread settings when ordering Pivoting Front Fenders.**

***Quick Hitch should be removed if using the 6 or 21 spline PTO shaft so that proper PTO to Hitch position is maintained. Not Compatible with Rear Fender Extensions (2M10 & 2M55 Fenders).**

Order Code	Catalog Number	Description	Factory Code	Approx. Weight (lb.)	List Price
FACTORY INSTALLED OPTIONS- CONTINUED					
DRAWBAR					
95-YM242	Base	Category III Drawbar & Clevis			**In Base**
95-YM243	7294257	Category III Heavy Duty Drawbar & Clevis	M50358		654.00
95-YM246*	7294136	Category IV Drawbar & Clevis	M73997		961.00
***Category IV Drawbar only offered with 20 Spline PTO Shaft Option from the factory. Drawbar position for 6 & 21 spline shafts are not achievable with the Category IV Drawbar. The 6 & 21 spline PTO shafts and Category III Drawbar can be ordered from Parts if required.**					
MISCELLANEOUS OPTIONS					
	5020425JM	CD Player, Bluetooth, Radio with Antenna & Speakers (MP3 Compatible)			**In Base**
	5020424JM	Antenna and Speakers	(M15092)		(196.00)
215-CB002	7294181	Engine Block Heater	M17094		222.00
250-GS001	7294185	Hydraulic Trailer Brakes	M67452		876.00
250-GS067	7294187	Hydraulic & Pneumatic Trailer Brakes	M619465		8,045.00
275-TC005	7294210	French Language OIB and Decals			No Charge
275-TC011	7294211	Spanish Language OIB and Decals			No Charge
FACTORY INSTALLED WEIGHTS					
345-YB004	7294271*	1500 kg. (3,306 lbs.) Monoblock Weight	M450373		5,849.00
345-YB005	7294272*	2300 kg. (5,070 lbs.) Monoblock Weight	M690998		8,974.00
***Not Compatible with Front Weight Package**					
325-RD040	7294192	Rear Wheel Weights, 2 x 250 kg. (550 lbs.)	M146377		1,901.00
325-RD041	7294200	Rear Wheel Weights, 4 x 250 kg. (550 lbs.)	M292677		3,801.00
325-RD042	7294201	Rear Wheel Weights, 6 x 250 kg. (550 lbs.)	M301686		3,918.00
REAR FENDER OPTIONS					
255-WD210	Base	2.10M (78.75") Wide Rear Fenders			**In Base**
255-WD344*	7294266	2.10M Wide Rear Fenders with Rear 70+100mm Side Extensions	M24563		319.00
255-WD365*	7294267	2.45M Wide Rear Fenders with Rear 100mm Side Extensions	M64988		844.00
255-WD379*	7294269	2.45M Wide Rear Fenders with Rear 70+100mm Side Extensions	M75229		97700
*** Not Compatible with Quick Hitch**					

Catalog Number	Description	Factory Code	Approx. Weight (lb.)	List Price
DEALER INSTALLED WEIGHTS				
5020186JM	Front Weight Package, 8 x 55 kg (121 lbs.)	M123739	968	1,607.00
5020187JM	Front Weight Package, 10 x 55 kg (121 lbs.)	M153230	1210	1,990.00
5020188JM	Front Weight Package, 12 x 55 kg (121 lbs.)	M182028	1452	2,364.00
5020189JM	Front Weight Package, 14 x 55 kg (121 lbs.)	M212443	1694	2,759.00
5020190JM	Front Weight Package, 16 x 55 kg (121 lbs.)	M242704	1936	3,152.00
5020191JM	Front Weight Package, 18 x 55 kg (121 lbs.)	M273042	2178	3,546.00
5020192JM	Front Weight Package, 24 x 55 kg (121 lbs.)	M364133	2904	4,729.00
72518082JM	Rear Wheel Weights, 2 x 250 kg (551 lbs.) Includes Adapters and Hardware to mount weight to the 10 bolt hub (Steel Center Rim)	M161007		2,091.00
72518084JM	Rear Wheel Weights, 2 x 250 kg (551 lbs.) Includes Hardware to mount weight to Cast Center Wheel or to previously mounted 250kg weight; Up to three weights can be mounted together.	M161007		2,091.00

MASSEY FERGUSON®

Catalog Number	Description	Factory Code	Approx. Weight (lb.)	List Price
DEALER INSTALLED FRONT OUTER TIRE AND WHEELS				
It is required that T0001 -- Michelin Brand, T0002 -- Goodyear Brand, T0007 -- Firestone, T0010 -- Trelleborg, be ordered for the factory to guarantee the correct tire brand is supplied on the tractor.				
5020360JM	320/85R38 R1W Michelin Agribib R.C. (143A8/143B) Waffle Rim	M565796		7,348.00
5020445JM	320/85R38 R1W Goodyear DT800 (143A8/B) Waffle Rim	M526757		6,841.00
5020448JM	320/85R38 RW Firestone Radial 9000 (143A8/B) Waffle Rim	M537537		6,981.00
5020381JM	380/80R38 R1W Firestone Radial (142A8/142B) All Traction DT	M570801		7,413.00
5020396JM	380/80R38 R1W Goodyear DT800 (142A8/142B)	M558789		7,257.00
5020363JM	380/80R38 R1W Michelin Agribib (142A8/142B) Waffle Rim	M594132		7,716.00
5020451JM	380/80R38 R1W Trelleborg TM600 (142A8/142B) Waffle Rim	M577423		7,499.00
5020456JM	420/85R34 R1W Michelin Agribib (142A8/142B) Waffle Rim	M587972		7,636.00
5020378JM	420/85R34 R1W Firestone Radial (147A/147B) All Traction DT	M558250		7,250.00
5020393JM	420/85R34 R1W Goodyear Super Traction Radial (147A8/147B)	M565950		7,350.00
5020414JM	420/85R34 R1W Trelleborg TM600 (142A8/139B)	M577500		7,500.00
5020439JM	VF420/85R34 R1W Michelin Yieldbib (154A8/154B) Waffle Rim	M633171		8,223.00
5020399JM	420/90R30 R1W Goodyear DT800 (147A8/147B)	M502040		6,520.00
5020405JM	420/90R30 R1W Firestone Radial (145A8/145B) All Traction DT	M508123		6,599.00
5020345JM	420/90R30 R1W Michelin Agribib (147A8/147B) Waffle Rim	M540232		7,016.00
5020408JM	480/70R34 R1W Firestone Radial 9000 (155A8/155B)	M607838		7,894.00
5020402JM	480/70R34 R1W Goodyear DT812 (146A8/146B)	M552475		7,175.00
5020411JM	480/70R34 R1W Trelleborg TM700 (143A8/143B)	M552475		7,175.00
5020357JM	480/70R34 R1W Michelin Omnibib (143D) Waffle Rim	M616462		8,006.00
5020375JM	380/85R34 R1W Firestone Radial (137A8/137B) All Traction DT	M481481		6,253.00
5020390JM	380/85R34 R1W Goodyear DT800 (137A/137B)	M540540		7,020.00
5020372JM	380/85R34 R1W Trelleborg TM600 (137A8/137B)	M558250		7,250.00
5020351JM	380/85R34 R1W Michelin Agribib (137A8/137B) Waffle Rim	M573650		7,450.00
5020436JM	VF380/85R34 RW1 Michelin Yieldbib (154A8/149B) Waffle Rim	M604835		7,855.00
5020384JM	420/85R30 R1W Goodyear Super Traction Radial (144A/144B)	M479633		6,229.00
5020366JM	420/85R30 R1W Trelleborg TM600 (140A8/137B)	M481250		6,250.00
5020342JM	420/85R30 R1W Michelin Agribib (137A8/134B) Waffle Rim	M489874		6,362.00
5020442JM	IF420/85R34 RW1 Firestone AD2 (152A8/152B) Waffle Rim	M572033		7,429.00
SPACER KITS ARE REQUIRED TO INSTALL FRONT OUTERS				
72517923JM	15.5” Spacer Kit (To achieve 120" tread setting)	M139062		1,806.00
72517922JM	22.0” Spacer Kit	M194579		2,527.00

Order Code	Catalog Number	Description	Factory Code	Approx. Weight (lb.)	List Price

TIRES FOR MF 8727S

TIRE BRAND SELECTION- REQUIRED

70-Blank	7294212	Factory Brand Choice		No Charge
70-T0001	7294195	Michelin Brand Required	M150150	1,950.00
70-T0002	7294196	Goodyear Brand Required	M94633	1,229.00
70-T0007	7294197	Firestone Brand Required	M94633	1,229.00
70-T0010	7294198	Trelleborg Brand Required	M94633	1,229.00

Note: Tire brand subject to change without notice unless a Brand is specified in Segment 70
Tire Brand Availability is listed after each tire size.

FRONT AND REAR TIRES - REQUIRED*

***11 weeks out for changes on Jackson Built Models**

Rear: Single Steel Welded Wheel
Front: Welded Wheel

75-W1583	7294856B1	Rear: 650/85R38 R1W (MI, TR)		
	7294796B1	Front: 600/70R28 R1W (MI, TR)	(M405174)	(5,262.00)
75-W1585	7294857B1	Rear: 710/70R38 R1W (MI, GY, FI, TR)		
	7294795B1	Front: 600/65R28 R1W (MI, GY, FI, TR)	(M374913)	(4,869.00)
75-W1587	7294859B1	Rear: 710/70R42 R1W (MI, GY, TR)		
	7294796B1	Front: 600/70R28 R1W (MI, GY, TR)	(M32648)	(424.00)

Rear: Single Steel Welded Wheel
Front: Waffle Wheel

75-W1525	7294859B1	Rear: 710/70R42 R1W (MI, GY, FI, TR)		
	7294756B1	Front: 480/70R34 R1W (MI, GY, FI, TR)	(M121660)	(1,580.00)

TIRES FOR MF 8727S

FRONT AND REAR TIRES - REQUIRED - (CONTINUED)

Rear: Dual Row Crop Single Cast
Front: Waffle Wheel

Order Code	Catalog Number	Description	Factory Code	Approx. Weight (lb.)	List Price
75-Base	7294864B1	Duals: 480/80R46 R1W (MI)			
	7294750B1	Front: 420/90R30 R1W (MI)			**In Base**
75-W1391	7294863B1	Duals: 520/85R42 R1W (MI)			
	7294750B1	Front: 420/90R30 R1W (MI)	M43351		563.00
75-W1744	7294869B1	Duals: 380/90R54 R1W (GY, FI, TR)			
	7294758B1	Front: 380/80R38 R1W (GY, FI, TR)	M117348		1,524.00
75-W1526	7294867B1	Duals: 480/80R50 R1W (MI, FI, TR)			
	7294755B1	Front: 420/85R34 R1W (MI, FI, TR)	M132286		1,718.00
75-W1598	7294867B1	Duals: 480/80R50 R1W (MI, FI, TR)			
	7294756B1	Front: 480/70R34 R1W (MI, FI, TR)	M226380		2,940.00
75-W1722	7294867B1	Duals: 480/80R50 R1W (MI, FI, TR)			
	7294758B1	Front: 380/80R38 R1W (MI, FI, TR)	M203742		2,646.00
75-W1597	7294865B1	Duals: 520/85R46 R1W (MI, GY, FI, TR)			
	7294755B1	Front: 420/85R34 R1W (MI, GY, FI, TR)	M170786		2,218.00
75-W1418	7294865B1	Duals: 520/85R46 R1W (MI, GY, FI, TR)			
	7294756B1	Front: 480/70R34 R1W (MI, GY, FI, TR)	M264880		3,440.00
75-W1721	7294865B1	Duals: 520/85R46 R1W (MI, GY, FI, TR)			
	7294758B1	Front: 380/80R38 R1W (MI, GY, FI, TR)	M242242		3,146.00
75-W1404	7294868B1	Duals: 320/90R54 R1W (MI, GY, FI)			
	7294757B1	Front: 320/85R38 R1W (MI, GY, FI)	M30338		394.00
75-W1864	7294919B1	Duals: VF480/80R46 R1W (MI)			
	7294917B1	Front: VF380/85R34 R1W (MI)	M368522		4,786.00
75-W1865	7294920B1	Duals: VF480/80R50 R1W (MI)			
	7294918B1	Front: VF420/85R34 R1W (MI)	M440748		5,724.00
75-W1865	7294923B1	Duals: IF480/80R50 R1W (FI)			
	7294922B1	Front: IF420/85R34 R1W (FI)	M420651		5,463.00
*75-W1401	7294864B1	Duals: 480/80R46 R1W (MI, FI, TR)			
	7294754B1	Front: 380/85R34 R1W (MI, FI, TR)	(M19404)		(252.00)
*75-W1399	7294863B1	Duals: 520/85R42 R1W (MI, GY, FI, TR)			
	7294754B1	Front: 380/85R34 R1W (MI, GY, FI, TR)	M23947		311.00
*75-W1596	7294863B1	Duals: 520/85R42 R1W (MI, GY, TR)			
	7294749B1	Front: 420/85R30 R1W (MI, GY, TR)	M40502		526.00

***Requires Dealer Installed Front Duals ordered from Loose Accessories**

Rear: Dual Row Crop Single Cast
Front: Welded Steel

75-W1733	7294867B1	Duals: 480/80R50 R1W (MI, TR)			
	7294796B1	Front: 600/70R28 R1W (MI, TR)	M315392		4,096.00
75-W1746	7294865B1	Duals: 520/85R46 R1W (MI, GY, TR)			
	7294796B1	Front: 600/70R28 R1W (MI, GY, TR)	M353892		4,596.00

Field Installed Spacer Kit - Rear Wheels

	72517687JM	Dual Wheel Spacer Kit - 240mm	M205667		2,671.00

TIRES FOR MF 8730S

TIRE BRAND SELECTION- REQUIRED

Order Code	Catalog Number	Description	Factory Code	Approx. Weight (lb.)	List Price
70-Blank	7294212	Factory Brand Choice			No Charge
70-T0001	7294195	Michelin Brand Required	M150150		1,950.00
70-T0002	7294196	Goodyear Brand Required	M94633		1,229.00
70-T0007	7294197	Firestone Brand Required	M94633		1,229.00
70-T0010	7294198	Trelleborg Brand Required	M94633		1,229.00

Note: Tire brand subject to change without notice unless a Brand is specified in Segment 70.
Tire Brand Availability is listed after each tire size.

FRONT AND REAR TIRES - REQUIRED*

***11 weeks out for changes on Jackson Built Models**

Rear: Single Steel Welded Wheel
Front: Welded Wheel

75-W1583	7294856B1	Rear: 650/85R38 R1W (MI, TR)			
	7294796B1	Front: 600/70R28 R1W (MI, TR)	(M405174)		(5,262.00)
75-W1585	7294857B1	Rear: 710/70R38 R1W (MI, GY, FI, TR)			
	7294795B1	Front: 600/65R28 R1W (MI, GY, FI, TR)	(M374913)		(4,869.00)
75-W1587	7294859B1	Rear: 710/70R42 R1W (MI, GY, TR)			
	7294796B1	Front: 600/70R28 R1W (MI, GY, TR)	(M32648)		(424.00)
75-W1561	7294878B1	Rear: 710/75R42 R1W (TR)			
	7294799B1	Front: 600/65R34 R1W (TR)	M204358		2,654.00
75-W1739	7294878B1	Rear: 710/75R42 R1W (TR)			
	7294914B1	Front: 650/60R34 R1W (TR)	M229614		2,982.00
75-W1714	7294881B1	Rear: 900/60R42 R1W (TR)			
	7294799B1	Front: 600/65R34 R1W (TR)	M550704		7,152.00
75-W1743	7294881B1	Rear: 900/60R42 R1W (TR)			
	7294914B1	Front: 650/60R34 R1W (TR)	M575960		7,480.00

Rear: Single Steel Welded Wheel
Front: Waffle Wheel

75-W1525	7294859B1	Rear: 710/70R42 R1W (MI, GY, FI, TR)			
	7294756B1	Front: 480/70R34 R1W (MI, GY, FI, TR)	(M121660)		(1,580.00)

TIRES FOR MF 8730S

FRONT AND REAR TIRES - REQUIRED - (CONTINUED)

Rear: Dual Row Crop Single Cast
Front: Waffle Wheel

Order Code	Catalog Number	Description	Factory Code	Approx. Weight (lb.)	List Price
75-Base	7294864B1	Duals: 480/80R46 R1W (MI)			
	7294750B1	Front: 420/90R30 R1W (MI)			**In Base**
75-W1391	7294863B1	Duals: 520/85R42 R1W (MI)			
	7294750B1	Front: 420/90R30 R1W (MI)	M43351		563.00
75-W1744	7294869B1	Duals: 380/90R54 R1W (GY, FI, TR)			
	7294758B1	Front: 380/80R38 R1W (GY, FI, TR)	M117348		1,524.00
75-W1526	7294867B1	Duals: 480/80R50 R1W (MI, FI, TR)			
	7294755B1	Front: 420/85R34 R1W (MI, FI, TR)	M132286		1,718.00
75-W1598	7294867B1	Duals: 480/80R50 R1W (MI, FI, TR)			
	7294756B1	Front: 480/70R34 R1W (MI, FI, TR)	M226380		2,940.00
75-W1722	7294867B1	Duals: 480/80R50 R1W (MI, FI, TR)			
	7294758B1	Front: 380/80R38 R1W (MI, FI, TR)	M203742		2,646.00
75-W1597	7294865B1	Duals: 520/85R46 R1W (MI, GY, FI, TR)			
	7294755B1	Front: 420/85R34 R1W (MI, GY, FI, TR)	M170786		2,218.00
75-W1418	7294865B1	Duals: 520/85R46 R1W (MI, GY, FI, TR)			
	7294756B1	Front: 480/70R34 R1W (MI, GY, FI, TR)	M264880		3,440.00
75-W1721	7294865B1	Duals: 520/85R46 R1W (MI, GY, FI, TR)			
	7294758B1	Front: 380/80R38 R1W (MI, GY, FI, TR)	M242242		3,146.00
75-W1404	7294868B1	Duals: 320/90R54 R1W (MI, GY, FI)			
	7294757B1	Front: 320/85R38 R1W (MI, GY, FI)	M30338		394.00
75-W1864	7294919B1	Duals: VF480/80R46 R1W (MI)			
	7294917B1	Front: VF380/85R34 R1W (MI)	M368522		4,786.00
75-W1865	7294920B1	Duals: VF480/80R50 R1W (MI)			
	7294918B1	Front: VF420/85R34 R1W (MI)	M440748		5,724.00
75-W1865	7294923B1	Duals: IF480/80R50 R1W (FI)			
	7294922B1	Front: IF420/85R34 R1W (FI)	M420651		5,463.00
*75-W1401	7294864B1	Duals: 480/80R46 R1W (MI, FI, TR)			
	7294754B1	Front: 380/85R34 R1W (MI, FI, TR)	(M19404)		(252.00)
*75-W1399	7294863B1	Duals: 520/85R42 R1W (MI, GY, FI, TR)			
	7294754B1	Front: 380/85R34 R1W (MI, GY, FI, TR)	M23947		311.00
*75-W1596	7294863B1	Duals: 520/85R42 R1W (MI, GY, TR)			
	7294749B1	Front: 420/85R30 R1W (MI, GY, TR)	M40502		526.00

***Requires Dealer Installed Front Duals ordered from Loose Accessories**

Rear: Dual Row Crop Single Cast
Front: Welded Steel

75-W1733	7294867B1	Duals: 480/80R50 R1W (MI, TR)			
	7294796B1	Front: 600/70R28 R1W (MI, TR)	M315392		4,096.00
75-W1746	7294865B1	Duals: 520/85R46 R1W (MI, GY, TR)			
	7294796B1	Front: 600/70R28 R1W (MI, GY, TR)	M353892		4,596.00

Field Installed Spacer Kit - Rear Wheels

	72517687JM	Dual Wheel Spacer Kit - 240mm	M205667		2,671.00

Order Code	Catalog Number	Description	Factory Code	Approx. Weight (lb.)	List Price

TIRES FOR MF 8732S

TIRE BRAND SELECTION- REQUIRED

70-Blank	7294212	Factory Brand Choice		No Charge
70-T0001	7294195	Michelin Brand Required	M150150	1,950.00
70-T0002	7294196	Goodyear Brand Required	M94633	1,229.00
70-T0007	7294197	Firestone Brand Required	M94633	1,229.00
70-T0010	7294198	Trelleborg Brand Required	M94633	1,229.00

Note: Tire brand subject to change without notice unless a Brand is specified in Segment 70.
Tire Brand Availability is listed after each tire size.

FRONT AND REAR TIRES - REQUIRED*

***11 weeks out for changes on Jackson Built Models**

Rear: Single Steel Welded Wheel
Front: Welded Wheel

75-W1583	7294856	Rear: 650/85R38 R1W (MI, TR)		
	7294796	Front: 600/70R28 R1W (MI, TR)	(M692769)	(8,997.00)
75-W1585	7294857	Rear: 710/70R38 R1W (MI, GY, FI, TR)		
	7294795	Front: 600/65R28 R1W (MI, GY, FI, TR)	(M505736)	(6,568.00)
75-W1587	7294859	Rear: 710/70R42 R1W (MI, GY, TR)		
	7294796	Front: 600/70R28 R1W (MI, GY, TR)	(M163471)	(2,123.00)
75-W1561	7294878	Rear: 710/75R42 R1W (TR)		
	7294799	Front: 600/65R34 R1W (TR)	M73458	954.00
75-W1739	7294878	Rear: 710/75R42 R1W (TR)		
	7294914	Front: 650/60R34 R1W (TR)	M98791	1,283.00
75-W1714	7294881	Rear: 900/60R42 R1W (TR)		
	7294799	Front: 600/65R34 R1W (TR)	M418418	5,434.00
75-W1743	7294881	Rear: 900/60R42 R1W (TR)		
	7294914	Front: 650/60R34 R1W (TR)	M443751	5,763.00

Rear: Single Steel Welded Wheel
Front: Waffle Wheel

75-W1525	7294859	Rear: 710/70R42 R1W (MI, GY, FI, TR)		
	7294756	Front: 480/70R34 R1W (MI, GY, FI, TR)	(M252560)	(3,280.00)

MASSEY FERGUSON®

TIRES FOR MF 8732S

FRONT AND REAR TIRES - REQUIRED - (CONTINUED)

Order Code	Catalog Number	Description	Factory Code	Approx. Weight (lb.)	List Price
Rear: Dual Row Crop Single Cast Front: Waffle Wheel					
75-Base	7294867	Duals: 480/80R50 R1W (MI, GY, FI, TR)			
	7294755	Front: 420/85R34 R1W (MI, GY, FI, TR)			**In Base**
75-W1414	7294864	Duals: 480/80R46 R1W (MI)			
	7294750	Front: 420/90R30 R1W (MI)	(M128436)		(1,668.00)
75-W1391	7294863	Duals: 520/85R42 R1W (MI)			
	7294750	Front: 420/90R30 R1W (MI)	(M86317)		(1,121.00)
75-W1744	7294869	Duals: 380/90R54 R1W (GY, FI, TR)			
	7294758	Front: 380/80R38 R1W (GY, FI, TR)	(M13552)		(176.00)
75-W1598	7294867	Duals: 480/80R50 R1W (MI, FI, TR)			
	7294756	Front: 480/70R34 R1W (MI, FI, TR)	M94094		1,222.00
75-W1722	7294867	Duals: 480/80R50 R1W (MI, FI, TR)			
	7294758	Front: 380/80R38 R1W (MI, FI, TR)	M71533		929.00
75-W1597	7294865	Duals: 520/85R46 R1W (MI, GY, FI, TR)			
	7294755	Front: 420/85R34 R1W (MI, GY, FI, TR)	M38423		499.00
75-W1418	7294865	Duals: 520/85R46 R1W (MI, GY, FI, TR)			
	7294756	Front: 480/70R34 R1W (MI, GY, FI, TR)	M132517		1,721.00
75-W1721	7294865	Duals: 520/85R46 R1W (MI, GY, FI, TR)			
	7294758	Front: 380/80R38 R1W (MI, GY, FI, TR)	M109956		1,428.00
75-W1404	7294868	Duals: 320/90R54 R1W (MI, GY, FI)			
	7294757	Front: 320/85R38 R1W (MI, GY, FI)	(M100716)		(1,308.00)
75-W1864	7294919	Duals: VF480/80R46 R1W (MI)			
	7294917	Front: VF380/85R34 R1W (MI)	M239085		3,105.00
75-W1865	7294920	Duals: VF480/80R50 R1W (MI)			
	7294918	Front: VF420/85R34 R1W (MI)	M311157		4,041.00
75-W1865	7294923	Duals: IF480/80R50 R1W (FI)			
	7294922	Front: IF420/85R34 R1W (FI)	M291214		3,782.00
*75-W1401	7294864	Duals: 480/80R46 R1W (MI, FI, TR)			
	7294754	Front: 380/85R34 R1W (MI, FI, TR)	(M147840)		(1,920.00)
*75-W1399	7294863	Duals: 520/85R42 R1W (MI, GY, FI, TR)			
	7294754	Front: 380/85R34 R1W (MI, GY, FI, TR)	(M105721)		(1,373.00)
*75-W1596	7294863	Duals: 520/85R42 R1W (MI, GY, TR)			
	7294749	Front: 420/85R30 R1W (MI, GY, TR)	(M37422)		(486.00)

***Requires Dealer Installed Front Duals ordered from Loose Accessories**

Rear: Dual Row Crop Single Cast Front: Welded Steel					
75-W1733	7294867	Duals: 480/80R50 R1W (MI, TR)			
	7294796	Front: 600/70R28 R1W (MI, TR)	M183183		2,379.00
75-W1746	7294865	Duals: 520/85R46 R1W (MI, GY, TR)			
	7294796	Front: 600/70R28 R1W (MI, GY, TR)	M221606		2,878.00
Field Installed Spacer Kit - Rear Wheels					
	72517687JM	Dual Wheel Spacer Kit - 240mm	M205667		2,671.00

TIRES FOR MF 8735S

TIRE BRAND SELECTION- REQUIRED

Order Code	Catalog Number	Description	Factory Code	Approx. Weight (lb.)	List Price
70-Blank	7294212	Factory Brand Choice			No Charge
70-T0001	7294195	Michelin Brand Required	M150150		1,950.00
70-T0002	7294196	Goodyear Brand Required	M94633		1,229.00
70-T0007	7294197	Firestone Brand Required	M94633		1,229.00
70-T0010	7294198	Trelleborg Brand Required	M94633		1,229.00

Note: Tire brand subject to change without notice unless a Brand is specified in Segment 70.
Tire Brand Availability is listed after each tire size.

FRONT AND REAR TIRES - REQUIRED*

***11 weeks out for changes on Jackson Built Models**

Rear: Single Steel Welded Wheel
Front: Welded Wheel

75-W1583	7294856 7294796	Rear: 650/85R38 R1W (MI, TR) Front: 600/70R28 R1W (MI, TR)	(M692769)		(8,997.00)
75-W1585	7294857 7294795	Rear: 710/70R38 R1W (MI, GY, FI, TR) Front: 600/65R28 R1W (MI, GY, FI, TR)	(M505736)		(6,568.00)
75-W1587	7294859 7294796	Rear: 710/70R42 R1W (MI, GY, TR) Front: 600/70R28 R1W (MI, GY, TR)	(M163471)		(2,123.00)
75-W1561	7294878 7294799	Rear: 710/75R42 R1W (TR) Front: 600/65R34 R1W (TR)	M73458		954.00
75-W1739	7294878 7294914	Rear: 710/75R42 R1W (TR) Front: 650/60R34 R1W (TR)	M98791		1,283.00
75-W1714	7294881 7294799	Rear: 900/60R42 R1W (TR) Front: 600/65R34 R1W (TR)	M418418		5,434.00
75-W1743	7294881 7294914	Rear: 900/60R42 R1W (TR) Front: 650/60R34 R1W (TR)	M443751		5,763.00

Rear: Single Steel Welded Wheel
Front: Waffle Wheel

75-W1525	7294859 7294756	Rear: 710/70R42 R1W (MI, GY, FI, TR) Front: 480/70R34 R1W (MI, GY, FI, TR)	(M252560)		(3,280.00)

TIRES FOR MF 8735S

FRONT AND REAR TIRES - REQUIRED - (CONTINUED)

Rear: Dual Row Crop Single Cast
Front: Waffle Wheel

Order Code	Catalog Number	Description	Factory Code	Approx. Weight (lb.)	List Price
75-Base	7294867	Duals: 480/80R50 R1W (MI, GY, FI, TR)			
	7294755	Front: 420/85R34 R1W (MI, GY, FI, TR)			**In Base**
75-W1414	7294864	Duals: 480/80R46 R1W (MI)			
	7294750	Front: 420/90R30 R1W (MI)	(M128436)		(1,668.00)
75-W1391	7294863	Duals: 520/85R42 R1W (MI)			
	7294750	Front: 420/90R30 R1W (MI)	(M86317)		(1,121.00)
75-W1744	7294869	Duals: 380/90R54 R1W (GY, FI, TR)			
	7294758	Front: 380/80R38 R1W (GY, FI, TR)	(M13552)		(176.00)
75-W1598	7294867	Duals: 480/80R50 R1W (MI, FI, TR)			
	7294756	Front: 480/70R34 R1W (MI, FI, TR)	M94094		1,222.00
75-W1722	7294867	Duals: 480/80R50 R1W (MI, FI, TR)			
	7294758	Front: 380/80R38 R1W (MI, FI, TR)	M71533		929.00
75-W1597	7294865	Duals: 520/85R46 R1W (MI, GY, FI, TR)			
	7294755	Front: 420/85R34 R1W (MI, GY, FI, TR)	M38423		499.00
75-W1418	7294865	Duals: 520/85R46 R1W (MI, GY, FI, TR)			
	7294756	Front: 480/70R34 R1W (MI, GY, FI, TR)	M132517		1,721.00
75-W1721	7294865	Duals: 520/85R46 R1W (MI, GY, FI, TR)			
	7294758	Front: 380/80R38 R1W (MI, GY, FI, TR)	M109956		1,428.00
75-W1864	7294919	Duals: VF480/80R46 R1W (MI)			
	7294917	Front: VF380/85R34 R1W (MI)	M239085		3,105.00
75-W1865	7294920	Duals: VF480/80R50 R1W (MI)			
	7294918	Front: VF420/85R34 R1W (MI)	M311157		4,041.00
75-W1865	7294923	Duals: IF480/80R50 R1W (FI)			
	7294922	Front: IF420/85R34 R1W (FI)	M291214		3,782.00

Rear: Dual Row Crop Single Cast
Front: Welded Steel

75-W1733	7294867	Duals: 480/80R50 R1W (MI, TR)			
	7294796	Front: 600/70R28 R1W (MI, TR)	M183183		2,379.00
75-W1746	7294865	Duals: 520/85R46 R1W (MI, GY, TR)			
	7294796	Front: 600/70R28 R1W (MI, GY, TR)	M221606		2,878.00

Field Installed Spacer Kit - Rear Wheels

	72517687JM	Dual Wheel Spacer Kit - 240mm	M205667		2,671.00

Order Code	Catalog Number	Description	Factory Code	Approx. Weight (lb.)	List Price

TIRES FOR MF 8737S & MF8740S

TIRE BRAND SELECTION- REQUIRED

70-Blank	7294212	Factory Brand Choice		No Charge
70-T0001	7294195	Michelin Brand Required	M150150	1,950.00
70-T0002	7294196	Goodyear Brand Required	M94633	1,229.00
70-T0007	7294197	Firestone Brand Required	M94633	1,229.00
70-T0010	7294198	Trelleborg Brand Required	M94633	1,229.00

Note: Tire brand subject to change without notice unless a Brand is specified in Segment 70.
Tire Brand Availability is listed after each tire size.

FRONT AND REAR TIRES - REQUIRED*

***11 weeks out for changes on Jackson Built Models**

Rear: Single Steel Welded Wheel
Front: Welded Wheel

75-W1583	7294856	Rear: 650/85R38 R1W (MI, TR)		
	7294796	Front: 600/70R28 R1W (MI, TR)	(M692769)	(8,997.00)
75-W1587	7294859	Rear: 710/70R42 R1W (MI, GY, TR)		
	7294796	Front: 600/70R28 R1W (MI, GY, TR)	(M163471)	(2,123.00)
75-W1561	7294878	Rear: 710/75R42 R1W (TR)		
	7294799	Front: 600/65R34 R1W (TR)	M73458	954.00
75-W1739	7294878	Rear: 710/75R42 R1W (TR)		
	7294914	Front: 650/60R34 R1W (TR)	M98791	1,283.00
75-W1714	7294881	Rear: 900/60R42 R1W (TR)		
	7294799	Front: 600/65R34 R1W (TR)	M418418	5,434.00
75-W1743	7294881	Rear: 900/60R42 R1W (TR)		
	7294914	Front: 650/60R34 R1W (TR)	M443751	5,763.00

Rear: Single Steel Welded Wheel
Front: Waffle Wheel

75-W1525	7294859	Rear: 710/70R42 R1W (MI, GY, FI, TR)		
	7294756	Front: 480/70R34 R1W (MI, GY, FI, TR)	(M252560)	(3,280.00)

TIRES FOR MF 8737S

FRONT AND REAR TIRES - REQUIRED - (CONTINUED)

Rear: Dual Row Crop Single Cast
Front: Waffle Wheel

Order Code	Catalog Number	Description	Factory Code	Approx. Weight (lb.)	List Price
75-Base	7294867	Duals: 480/80R50 R1W (MI, GY, FI, TR)			
	7294755	Front: 420/85R34 R1W (MI, GY, FI, TR)			**In Base**
75-W1414	7294864	Duals: 480/80R46 R1W (MI)			
	7294750	Front: 420/90R30 R1W (MI)	(M128436)		(1,668.00)
75-W1391	7294863	Duals: 520/85R42 R1W (MI)			
	7294750	Front: 420/90R30 R1W (MI)	(M86317)		(1,121.00)
75-W1744	7294869	Duals: 380/90R54 R1W (GY, FI, TR)			
	7294758	Front: 380/80R38 R1W (GY, FI, TR)	(M13552)		(176.00)
75-W1598	7294867	Duals: 480/80R50 R1W (MI, FI, TR)			
	7294756	Front: 480/70R34 R1W (MI, FI, TR)	M94094		1,222.00
75-W1722	7294867	Duals: 480/80R50 R1W (MI, FI, TR)			
	7294758	Front: 380/80R38 R1W (MI, FI, TR)	M71533		929.00
75-W1597	7294865	Duals: 520/85R46 R1W (MI, GY, FI, TR)			
	7294755	Front: 420/85R34 R1W (MI, GY, FI, TR)	M38423		499.00
75-W1418	7294865	Duals: 520/85R46 R1W (MI, GY, FI, TR)			
	7294756	Front: 480/70R34 R1W (MI, GY, FI, TR)	M132517		1,721.00
75-W1721	7294865	Duals: 520/85R46 R1W (MI, GY, FI, TR)			
	7294758	Front: 380/80R38 R1W (MI, GY, FI, TR)	M109956		1,428.00
75-W1864	7294919	Duals: VF480/80R46 R1W (MI)			
	7294917	Front: VF380/85R34 R1W (MI)	M239085		3,105.00
75-W1865	7294920	Duals: VF480/80R50 R1W (MI)			
	7294918	Front: VF420/85R34 R1W (MI)	M311157		4,041.00
75-W1865	7294923	Duals: IF480/80R50 R1W (FI)			
	7294922	Front: IF420/85R34 R1W (FI)	M291214		3,782.00

Rear: Dual Row Crop Single Cast
Front: Welded Steel

75-W1733	7294867	Duals: 480/80R50 R1W (MI, TR)			
	7294796	Front: 600/70R28 R1W (MI, TR)	M183183		2,379.00
75-W1746	7294865	Duals: 520/85R46 R1W (MI, GY, TR)			
	7294796	Front: 600/70R28 R1W (MI, GY, TR)	M221606		2,878.00

Field Installed Spacer Kit - Rear Wheels

	72517687JM	Dual Wheel Spacer Kit - 240mm	M205667		2,671.00

WHEEL TREAD SETTINGS

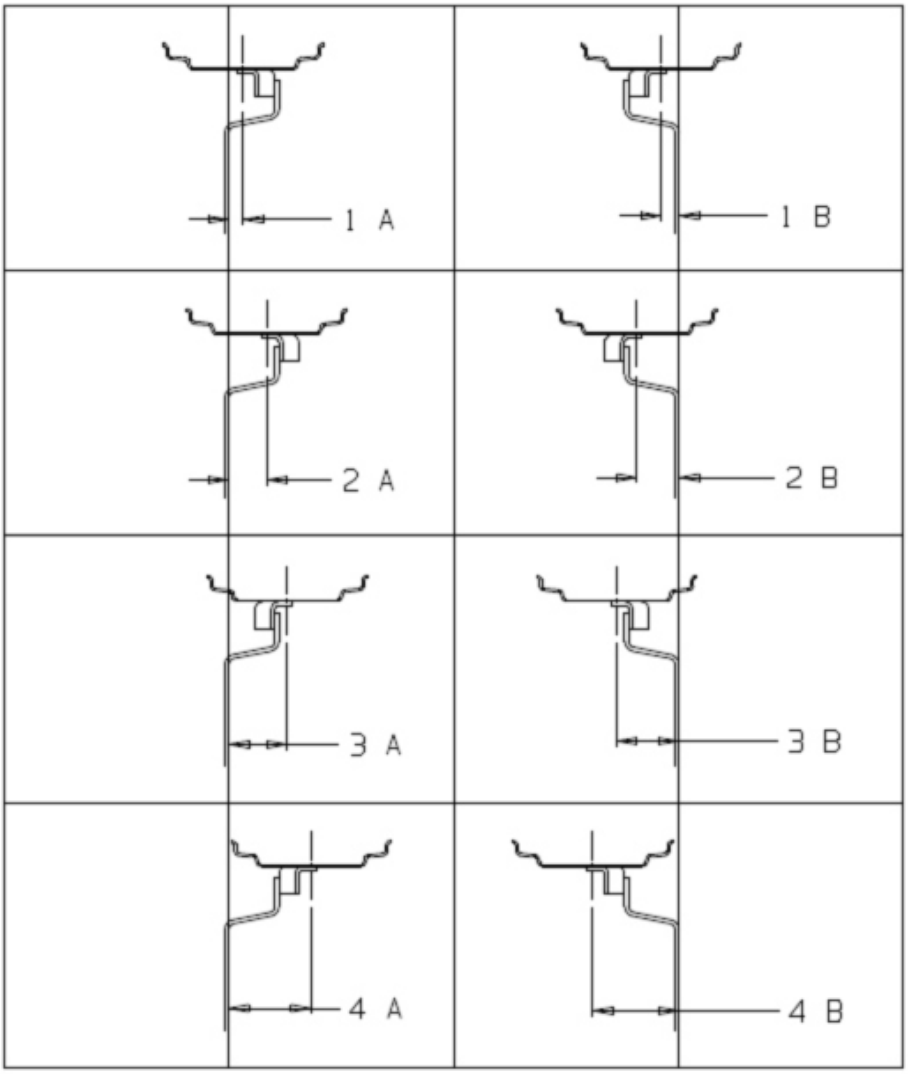

Position	Rims with Adjustable Disc	Track Width Reinforced Axle
Wheel Disc Facing Inwards	4A	61.4" (1560mm)
	3A	65.5" (1664mm)
	2A	69.4" (1764mm)
	1A	73.5" (1868mm)
Wheel Disc Facing Outward	1B	77.2" (1960mm)
	2B	81.3" (2064mm)
	3B	85.2" (2164mm)
	4B	89.3" (2268mm)

WHEEL TREAD SETTINGS

FRONT RIMS WITH WELDED DISKS:

Position	Rims with Welded Disc	Track Width Reinf. Axle
Wheel Disc Facing Inwards	1A	67.7" (1720mm)
Wheel Disc Facing Outward	1B	81.3" (2064mm)

WHEEL TREAD SETTINGS

REAR RIMS - SINGLE:

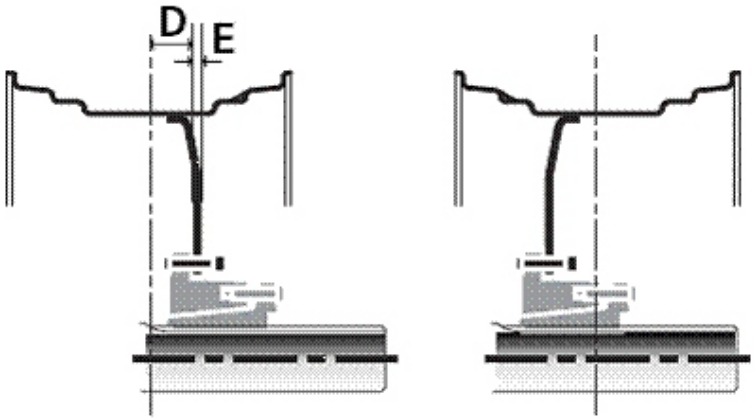

D = Rim offset 2.95" (75mm), E = Rim Disk thickness. 59" (15mm)		
	Disc Facing Inward (min/max)	**Disc Facing Outward (min/max)**
HA260 Short Bar Axle	70.1" (1780 mm) / 83.1" (2112 mm)	82.9" (2106 mm) / 96.0" (2438 mm)
HA260 Long Bar Axle	68.6" (1743 mm) / 112.7" (2862 mm)	81.5" (2069 mm) / 125.5" (3188 mm)

REAR RIMS - SINGLE:

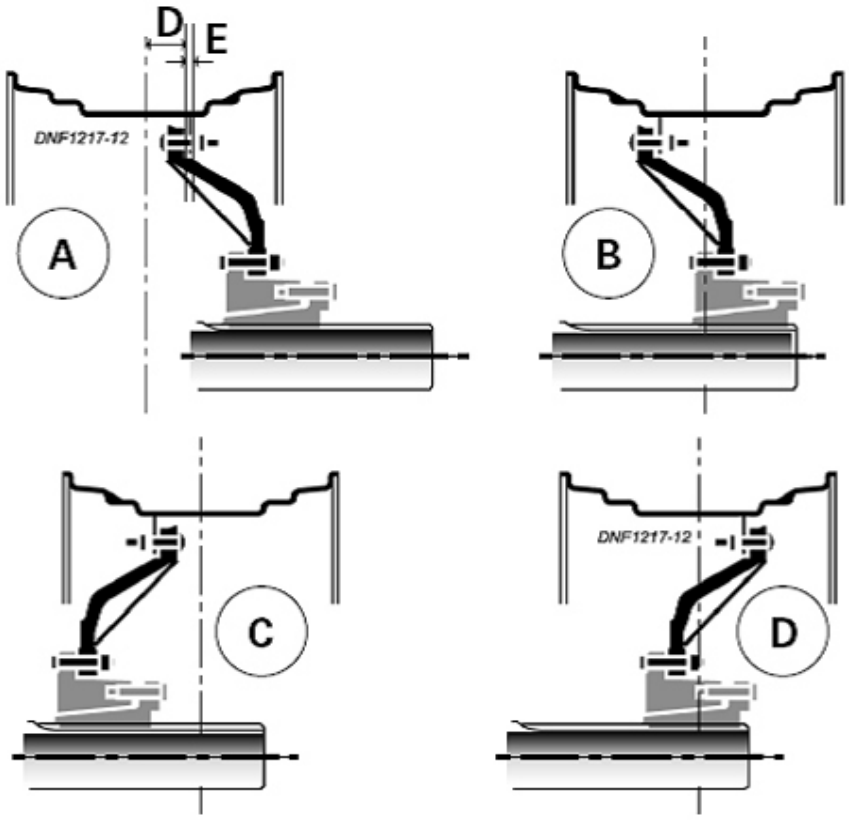

D = Rim offset 2.95" (75mm), E = Rim Disk thickness. 59" (15mm)		
	Disc Facing Inward (min/max)	**Disc Facing Outward (min/max)**
HA260 Short Bar Axle	A - 61.6" (1566 mm) / 74.7" (1898 mm)	D - 81.5" (2070 mm) / 94.6" (2402 mm)
	B - 74.5" (1892 mm) / 87.5" (2224 mm)	C - 94.3" (2396 mm) / 107.4" (2728 mm)
HA260 Long Bar Axle	A - 60.2" (1529 mm) / 104.2" (2648 mm)	D - 80.1" (2033 mm) / 124.1" (3152 mm)
	B - 73.0" (1855 mm) / 117.1" (2974 mm)	C - 92.9" (2359 mm) / 136.9" (3478 mm)

WHEEL TREAD SETTINGS

REAR RIMS - OUTER DUALS:

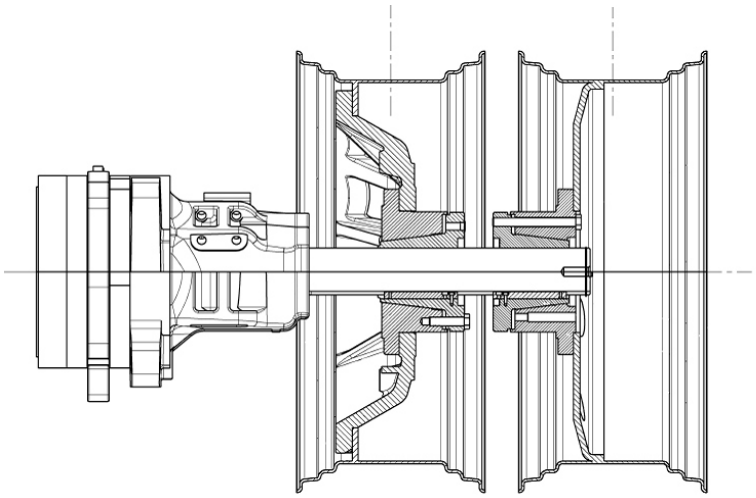

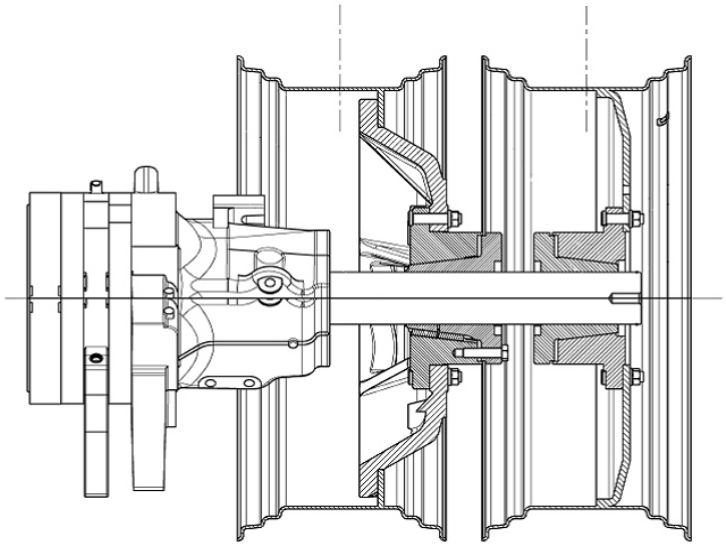

D = Rim offset 2.95" (75mm), E = Rim Disk thickness. 59" (15mm)		
	Disc Facing Inward (max)	**Disc Facing Outward (max)**
HA260 Long Bar Axle	112.7" (2862 mm)	125.5" (3188 mm)

MASSEY FERGUSON®

IMPLEMENTS

MASSEY FERGUSON®

IMPLEMENTS INDEX

PAGE

LOADERS 5
LOADER APPLICATION GUIDE 6

Loaders for Compact and Utility Tractors
MFFL1805 COMPACT LOADER 8
MFFLX2106 COMPACT LOADER 9
MFFLX2407 COMPACT LOADER 10
MFFL2611 COMPACT LOADER 11
MFFL2814 COMPACT LOADER 12
MFFLX2815 COMPACT LOADER 13
MF911X UTILITY LOADER 14
MF921X UTILITY LOADER 16
MF926X UTILITY LOADER 19
MF931X UTILITY LOADER 23
MF936X UTILITY LOADER 25
MFDL95 COMPACT LOADER **(Subject to Availability)** 27
MFL100E COMPACT LOADER **(Subject to Availability)** 28
MFL105E COMPACT LOADER **(Subject to Availability)** 29
MFDL125 COMPACT LOADER **(Subject to Availability)** 31
MFDL135 COMPACT LOADER **(Subject to Availability)** 33
MFL135E UTILITY LOADER **(Subject to Availability)** 35

Loaders for Mid-Range and High Horse Power Tractors

MFFL.3522 / MFFL.3615 LOADER 37
MF941X / MF946X LOADER 41
MFFL.3723 / MFFL.3819 LOADER 45
MFFL.4125 / MFFL.4124 LOADER 51
MFFL.4227 / MFFL.4327 LOADER 55
MFFL.4628 LOADER 61
MFFL.5033 LOADER 65

DEALER INSTALLED LOADER OPTIONS 72

IMPLEMENTS
INDEX

PAGE

MOWERS **75**

MOWER APPLICATION CHART 76
MF2315, MF2320, MF2326 MOWER 77
MF1505 MID-MOUNT MOWER 79
MF1705 MID-MOUNT MOWER 81

BACKHOES **83**

BACKHOE APPLICATION CHART 84
MFBH3222 BACKHOE 85
MFCB75 BACKHOE 75
MFCB85 BACKHOE 77

FRONT MOUNTED **79**

FRONT MOUNTED APPLICATION CHART 80
MF2340 BLADE 81
MF2360 SNOW BLOWER 82
MF1410 SNOW BLOWER 83
MF1507 SNOW BLOWER 84
MF2330 ROTARY BROOM 85

MASSEY FERGUSON®

RESERVED

MASSEY FERGUSON®

LOADERS

MASSEY FERGUSON®

LOADER APPLICATION CHART

Note: For specific tractor/loader applications and loader attachment/accessories, refer to loader price pages.

TRACTOR MODEL	FL1805 Loader	FLx2106 Loader	FLx2407 Loader	FL2611 Loader	FL2814 Loader
GC1723E/EB, 1725M/MB, GC1705, 1710, 1715, 1720	X				
MF1526H		X			
MF1825E, 1835E, 1840E, 1735E, 1740E, 1726E, 1734E, 1739E			X		
MF1835M, 1840M, 1735M, 1740M				X	
MF2850M, 2855M, 2860M, 1750M, 1755M, 1760M					X

*** Subject To Availability**

TRACTOR MODEL	FLx2815 Loader	MF911X Loader	MF921X Loader Non Self-Leveling	MF926X Loader Mechanical Self-Leveling	MF931X Loader Non Self-Leveling	MF936X Loader Mechanical Self-Leveling	MFFL.3522 Loader Non Self-Leveling	MFFL.3615 Loader Mechanical Self-Leveling
2850E, 2860E 2750E, 2760E 2705E, 2706E	X							
2600H Series	2WD ONLY	4WD ONLY						
4607M, 4608			X	X				
4609, 4610					X	X		
4609M, 4610M					X	X		
4700					X	X	X	X

LOADER APPLICATION CHART

MASSEY FERGUSON®

Note: For specific tractor/loader applications and loader attachment/accessories, refer to loader price pages.

TRACTOR MODEL	MF941X Loader	MF946X Loader	MF FL.3723 Loader	MF FL.3819 Loader	MF FL.4125 Loader	MF FL.4124 Loader	MF FL.4227 Loader	MF FL.4327 Loader	MF FL.4628 Loader	MF FL.5033 Loader
MF5710 MF5711 MF5710D MF5711D	X	X	X	X						
MF5711S/SL MF5712S/SL MF5713S/SL			X	X						
MF6712 MF6713	X	X	X	X						
MF6714S MF6715S MF6716S MF6718S					X	X				
MF7714/S MF7715/S MF7716/S MF7718/S							X	X		
MF7719/S MF7720/S MF7722/S									X	
MF7724/S MF7726/S MF8700/S Series										X

MFFL1805 COMPACT LOADER

QUICK ATTACH MOUNT LOADER

MASSEY FERGUSON®

(F.O.B. PORT OF ENTRY)

FEATURES

- One Piece Main Frame with Tapered Arms and Single Cross Member
- Quick Attach Loader Frame Mount with Pin Lock
- Built-in Parking Stands
- (2) 1.57 inch Double Acting Lift Cylinders
- (2) 1.57 inch Double Acting Bucket Cylinders
- Regenerative Hydraulics for Simultaneous Operation of Lift/Lower and Curl/Dump Functions
- Hydraulic Lines Routed Inside Main Frame for Protection and Visibility
- Galvanized Steel Pins
- Recessed Grease Zerk Points
- 48-inch Standard Duty Skid Steer Bucket
- Grille Guard Standard
- Fits all GC1700 Series Tractors
- Maximum Lift Height at Pivot Pins: 74 Inches
- Lift Capacity to Full Height at Pivot Pins: 922 lbs
- Breakout Force at Pivot Pins: 1,392 lbs
- Rated Hydraulic Pressure: 1,920 PSI
- Maximum Roll Back Angle: 30 Degrees
- Dump Angle: 43 Degrees
- **NOTE:** Soft Drive Capable, Third Function Capable - See Field Installed CUE Loader Options Chapter

NOTE: TRACTORS MUST BE PROPERLY BALLASTED FOR LOADER OPERATION. SEE OPERATOR'S MANUAL FOR INFORMATION.

NOTE: SPECIFICATIONS MAY VARY BETWEEN TRACTOR MODELS, TIRES AND HYDRAULIC OPTIONS.

Order Code	Catalog Number	Description	Factory Code	Approx. Weight (lb.)	List Price
BASE MACHINE					**Group 01**
	72530692	MFFL1805 Base Loader Kit - Includes Loader with Subframe, Hoses, 48-inch Skid Steer Bucket and Skid Steer Quick Attach Tool Carrier	10C2844		3,346.00
MANUALS					**Group 02**
	72530696	English Language Loader Manual			No Charge
	72530687	French Language Loader Manual			No Charge

Note: For Additional Loader Options, Refer to Dealer Installed CUE Loader Options.

Order Separately from Loader through Field Installed Options Tab in eOrdering.

MFFLX2106 COMPACT LOADER

QUICK ATTACH MOUNT LOADER

(F.O.B. PORT OF ENTRY)

MASSEY FERGUSON®

FEATURES

- One Piece Main Frame with Tapered Arms and Single Cross Member
- Quick Attach Loader Frame Mount with Pin Lock
- Built-in Parking Stands
- (2) 1.77 inch Double Acting Lift Cylinders
- (2) 1.77 inch Double Acting Bucket Cylinders
- Regenerative Hydraulics for Simultaneous Operation of Lift/Lower and Curl/Dump Functions
- Hydraulic Lines Routed Inside Main Frame for Protection and Visibility
- Galvanized Steel Pins
- Recessed Grease Zerk Points
- 54-inch Standard Duty Skid Steer Bucket
- Grille Guard Standard
- Fits MF1526H Tractors
- Maximum Lift Height at Pivot Pins: 83 Inches
- Lift Capacity to Full Height at Pivot Pins: 1,270 lbs
- Breakout Force at Pivot Pins: 1,870 lbs
- Rated Hydraulic Pressure: 2,132 PSI
- Maximum Roll Back Angle: 31 Degrees
- Dump Angle: 42 Degrees
- **NOTE:** Soft Drive Capable, Third Function Capable - See Field Installed CUE Loader Options Chapter; Compatible with MF1505 Mid-Mount Mower

NOTE: TRACTORS MUST BE PROPERLY BALLASTED FOR LOADER OPERATION. SEE OPERATOR'S MANUAL FOR INFORMATION.

NOTE: SPECIFICATIONS MAY VARY BETWEEN TRACTOR MODELS, TIRES AND HYDRAULIC OPTIONS.

Order Code	Catalog Number	Description	Factory Code	Approx. Weight (lb.)	List Price
BASE MACHINE					**Group 01**
	MFFLx2106	MFFLx2106 Base Loader Kit - Includes Loader with Subframe, Hydraulic Valve Kit, Hoses, 54-inch Skid Steer Bucket and Skid Steer Quick Attach Tool Carrier	30C3500		4,118.00
MANUALS					**Group 02**
	72530696	English Language Loader Manual			No Charge
	72530687	French Language Loader Manual			No Charge

Note: For Additional Loader Options, Refer to Dealer Installed CUE Loader Options.

Order Separately from Loader through Field Installed Options Tab in eOrdering.

MFFLX2407 COMPACT LOADER

QUICK ATTACH MOUNT LOADER

MASSEY FERGUSON®

(F.O.B. PORT OF ENTRY)

FEATURES

- One Piece Main Frame with Tapered Arms and Single Cross Member
- Quick Attach Loader Frame Mount with Pin Lock
- Built-in Parking Stands
- (2) 2.0 inch Double Acting Lift Cylinders
- (2) 2.0 inch Double Acting Bucket Cylinders
- External Hydraulic Lines Routed Along Main Frame for Protection and Visibility
- Galvanized Steel Pins
- Recessed Grease Zerk Points
- 60-inch Standard Duty Skid Steer Bucket
- Grille Guard Standard
- Fits all MF1800 Series Compact Tractor Models
- Maximum Lift Height at Pivot Pins: 94 inches
- Lift Capacity to Full Height at Pivot Pins: 1,450 lbs
- Breakout Force at Pivot Pins: 2,288 lbs
- Rated Hydraulic Pressure: 2,132 PSI
- Maximum Roll Back Angle: 26 Degrees
- Dump Angle: 54 Degrees

- **NOTE:** Third Function Capable - See Field Installed CUE Loader Options Chapter

NOTE: TRACTORS MUST BE PROPERLY BALLASTED FOR LOADER OPERATION. SEE OPERATOR'S MANUAL FOR INFORMATION.

NOTE: SPECIFICATIONS MAY VARY BETWEEN TRACTOR MODELS, TIRES AND HYDRAULIC OPTIONS.

Order Code	Catalog Number	Description	Factory Code	Approx. Weight (lb.)	List Price
BASE MACHINE					**Group 01**
	MFFLx2407	MFFLx2407 Base Loader Kit - Includes Loader with Subframe for **1800E Series**, Hydraulic Valve Kit, Hoses, 60-inch Skid Steer Bucket and Skid Steer Quick Attach Tool Carrier	25C4441		5,225.00
MANUALS					**Group 02**
	72530689	English Language Loader Manual			No Charge
	72530684	French Language Loader Manual			No Charge

Note: For Additional Loader Options, Refer to Dealer Installed CUE Loader Options.

Order Separately from Loader through Field Installed Options Tab in eOrdering.

MFFL2611 COMPACT LOADER

QUICK ATTACH MOUNT LOADER

(F.O.B. PORT OF ENTRY)

MASSEY FERGUSON®

FEATURES

- One Piece Main Frame with Tapered Arms and Single Cross Member
- Quick Attach Loader Frame Mount with Pin Lock
- Built-in Parking Stands
- Bucket Level Indicator
- (2) 2.36 inch Double Acting Lift Cylinders
- (2) 2.36 inch Double Acting Bucket Cylinders
- Hydraulic Lines Routed Inside Main Frame for Protection and Visibility
- Galvanized Steel Pins
- Recessed Grease Zerk Points
- 66-inch Standard Duty Skid Steer Bucket
- Grille Guard Standard
- Fits MF1835M / 1840M and MF1735M / 1740M Compact Tractor Models
- Maximum Lift Height at Pivot Pins: 100 Inches
- Lift Capacity to Full Height at Pivot Pins: 1,870 lbs
- Breakout Force at Pivot Pins: 2,950 lbs
- Rated Hydraulic Pressure: 2,277 PSI
- Maximum Roll Back Angle: 42 Degrees
- Dump Angle: 55 Degrees
- **NOTE:** Soft Drive Capable, Third Function Capable - See Field Installed CUE Loader Options Chapter

NOTE: TRACTORS MUST BE PROPERLY BALLASTED FOR LOADER OPERATION. SEE OPERATOR'S MANUAL FOR INFORMATION.

NOTE: SPECIFICATIONS MAY VARY BETWEEN TRACTOR MODELS, TIRES AND HYDRAULIC OPTIONS.

Order Code	Catalog Number	Description	Factory Code	Approx. Weight (lb.)	List Price
BASE MACHINE					**Group 01**
	MFFL2611	MFFL2611 Base Loader Kit - Includes Skid Steer Loader, Subframe for **1835M/1840M**, Hoses, and 66-inch Skid Steer Bucket	95C3949		4,647.00
	MFFL2611	MFFL2611 Base Loader Kit - Includes Skid Steer Loader, Subframe for **1735M/1740M**, Hoses, and 66-inch Skid Steer Bucket	95C3949		4,647.00
MANUALS					**Group 02**
	72530698	English Language Loader Manual			No Charge
	72530697	French Language Loader Manual			No Charge

Note: For Additional Loader Options, Refer to Dealer Installed CUE Loader Options.
Order Separately from Loader through Field Installed Options Tab in eOrdering.

MFFL2814 COMPACT LOADER

QUICK ATTACH MOUNT LOADER

MASSEY FERGUSON®

(F.O.B. PORT OF ENTRY)

FEATURES

- One Piece Main Frame with Tapered Arms and Single Cross Member
- Quick Attach Loader Frame Mount with Pin Lock
- Built-in Parking Stands
- Bucket Level Indicator
- (2) 2.76 inch Double Acting Lift Cylinders
- (2) 2.56 inch Double Acting Bucket Cylinders
- Hydraulic Lines Routed Inside Main Frame for Protection and Visibility
- Galvanized Steel Pins
- Recessed Grease Zerk Points
- 72-inch Standard Duty Skid Steer Bucket
- Grille Guard Standard
- Fits MF2850M, 2855M, 2860M, 1750M, 1755M, 1760M Compact Tractor Models
- Maximum Lift Height at Pivot Pins: 111 Inches
- Lift Capacity to Full Height at Pivot Pins: 2,570 lbs
- Breakout Force at Pivot Pins: 3,910 lbs
- Rated Hydraulic Pressure: 2,277 PSI
- Maximum Roll Back Angle: 26 Degrees
- Dump Angle: 54 Degrees
- **NOTE:** Soft Drive Capable, Third Function Capable - See Field Installed CUE Loader Options Chapter

NOTE: TRACTORS MUST BE PROPERLY BALLASTED FOR LOADER OPERATION. SEE OPERATOR'S MANUAL FOR INFORMATION.

NOTE: SPECIFICATIONS MAY VARY BETWEEN TRACTOR MODELS, TIRES AND HYDRAULIC OPTIONS

Order Code	Catalog Number	Description	Factory Code	Approx. Weight (lb.)	List Price
BASE MACHINE					**Group 01**
	MFFL2814	MFFL2814 Base Loader Kit - Includes Skid Steer Loader, Subframe for **MF2850M Mech and HST Tractors / 2855M Mech Tractors Only**, Hoses, and 72-inch Skid Steer Bucket	35C4412		5,191.00
	MFFL2814	MFFL2814 Base Loader Kit - Includes Skid Steer Loader, Subframe for **2860M Mechanical Tractors Only**, Hoses, and 72-inch Skid Steer Bucket	35C4412		5,191.00
	MFFL2814	MFFL2814 Base Loader Kit - Includes Skid Steer Loader, Subframe for **MF2860M HST Tractors Only**, Hoses, and 72-inch Skid Steer Bucket	35C4412		5,191.00
	MFFL2814	MFFL2814 Base Loader Kit - Includes Skid Steer Loader, Subframe for **MF1750M Mech and HST Tractors / 1755M Mech Tractors Only**, Hoses, and 72-inch Skid Steer Bucket	35C4412		5,191.00
	MFFL2814	MFFL2814 Base Loader Kit - Includes Skid Steer Loader, Subframe for **MF1755M / 1760M HST Tractors Only**, Hoses, and 72-inch Skid Steer Bucket	35C4412		5,191.00
	MFFL2814	MFFL2814 Base Loader Kit - Includes Skid Steer Loader, Subframe for **MF1760M Mechanical Tractors Only**, Hoses, and 72-inch Skid Steer Bucket	35C4412		5,191.00
MANUALS					**Group 02**
	72530698	English Language Loader Manual			No Charge
	72530697	French Language Loader Manual			No Charge

Note: For Additional Loader Options, Refer to Dealer Installed CUE Loader Options.

Order Separately from Loader through Field Installed Options Tab in eOrdering.

MFFLX2815 UTILITY LOADER

QUICK ATTACH MOUNT LOADER

(F.O.B. PORT OF ENTRY)

MASSEY FERGUSON®

FEATURES

- One Piece Main Frame with Tapered Arms and Single Cross Member
- Quick Attach Loader Frame Mount with Pin Lock
- Built-in Parking Stands
- Bucket Level Indicator
- (2) 2.76 inch Double Acting Lift Cylinders
- (2) 2.56 inch Double Acting Bucket Cylinders
- Hydraulic Valve with Integrated Joystick Mounted to Right Side Loader Subframe
- Hydraulic Lines Routed Inside Main Frame for Protection and Visibility
- Galvanized Steel Pins
- Recessed Grease Zerk Points
- 72-inch Standard Duty Skid Steer Bucket
- Grille Guard Standard
- Fits all MF2800E / 2700E Series Tractor Models
- Fits all MF2600H Series 2wd Tractor Models
- Maximum Lift Height at Pivot Pins: 111 Inches
- Lift Capacity to Full Height at Pivot Pins: 2,810 lbs
- Breakout Force at Pivot Pins: 4,240 lbs
- Rated Hydraulic Pressure: 2,350 PSI
- Maximum Roll Back Angle: 27 Degrees
- Dump Angle: 38 Degrees
- **NOTE:** Soft Drive Capable, Third Function Capable - See Field Installed CUE Loader Options Chapter

NOTE: TRACTORS MUST BE PROPERLY BALLASTED FOR LOADER OPERATION. SEE OPERATOR'S MANUAL FOR INFORMATION.

NOTE: SPECIFICATIONS MAY VARY BETWEEN TRACTOR MODELS, TIRES AND HYDRAULIC OPTIONS.

Order Code	Catalog Number	Description	Factory Code	Approx. Weight (lb.)	List Price
BASE MACHINE					**Group 01**
	MFFLx2815	MFFLx2815 Base Loader Kit - Includes Loader with Subframe for **MF2800E Tractors**, Hydraulic Valve Kit, Hoses, 72-inch Skid Steer Bucket and Skid Steer Quick Attach Tool Carrier	05C4720		5,553.00
	MFFLx2815	MFFLx2815 Base Loader Kit - Includes Loader with Subframe for **MF2700E Tractors**, Hydraulic Valve Kit, Hoses, 72-inch Skid Steer Bucket and Skid Steer Quick Attach Tool Carrier	05C4720		5,553.00
	MFFLx2815	MFFLx2815 Base Loader Kit - Includes Loader with Subframe for **MF2600H 2wd Tractors**, Hydraulic Valve Kit, Hoses, 72-inch Skid Steer Bucket and Skid Steer Quick Attach Tool Carrier	90C5043		5,934.00
MANUALS					**Group 02**
	72530698	English Language Loader Manual			No Charge
	72530697	French Language Loader Manual			No Charge

Note: For Additional Loader Options, Refer to Dealer Installed CUE Loader Options.

Order Separately from Loader through Field Installed Options Tab in eOrdering.

MF911X LOADER

NON SELF-LEVELING

(F.O.B. SIMPSONVILLE, SC)

FEATURES

- One Piece Main Frame with Tapered Arms and Single Cross Member
- Quick Attach Loader Frame Mount with Pin Lock
- Built-in Parking Stands
- (2) 2.4 inch (60mm) Double Acting Lift Cylinders
- (2) 2.4 inch (60mm) Double Acting Bucket Cylinders
- Hydraulic Valves with Integrated Joystick Mount to Right Side Loader Subframe
- Hydraulic Lines Routed Inside Main Frame for Protection and Visibility
- Galvanized Steel Pins with Bushings at Key Points
- Recessed Grease Zerk Points
- Universal Skid Steer or Euro Hook Type Implement Attachments
- Grille Guard Standard
- Fits all MF2600H Series 4wd Tractors
- Powder Painted with Corrosion Protection
- Bucket Level Indicator
- Lift Capacity to Full Height at 31.5 inches Forward of Pivot Pin: 1510 lbs
- Maximum Lift Height: 115 inches at Pivot
- Breakout Force: 2750 lbs
- Rated Hydraulic Pressure: 2755 PSI
- Maximum Roll Back Angle: 46 Degrees
- Maximum Dump Angle: 47 Degrees

NOTE: TRACTORS MUST BE PROPERLY BALLASTED FOR LOADER OPERATION. SEE OPERATOR'S MANUAL FOR INFORMATION.

NOTE: SPECIFICATIONS MAY VARY BETWEEN TRACTOR MODELS, TIRES AND HYDRAULIC OPTIONS.

Order Code	Catalog Number	Description	Factory Code	Approx. Weight (lb.)	List Price
For a Complete Loader, Select One Order Code or Catalog Number from Group 01 through Group 03					
For Additional Hydraulics, Buckets and Accessories Order as Required from Groups 04 through 07					
BASE MACHINE					**Group 01**
XL11N1D A200M	72533386	MF911X Base Loader - Skid Steer Style	65C3696	660	4,349.00
XL11N1D 8200M	72533635	MF911X Loader - Euro Style	15C3875	650	4,559.00
SUBFRAME MOUNTING KIT					**Group 02**
	72533840M	Subframe Kit for MF2600H Series 4wd Tractors	30C1426		1,678.00
HYDRAULICS					**Group 03**
	ACX3251020M	Direct Control Valve Kit for **MF2600H Series 4wd** Direct Control Valve with Float, for Operation of the Lift/Lower and Curl/Dump Functions (Includes Hoses to Base Loader)	10C1008		1,186.00
3RD FUNCTION HYDRAULIC OPTIONS					**Group 04**
	72533927M	Third Function Valve with 8 Pin Deutsch Connector	10C753	20	886.00
	72533512M	Wiring Harness 8 Pin Deutsch Connector - Third Function for MF2600H Series (Roquet Valve)	75C216		255.00
	72537056M	Third Function Valve with 12 Pin Deutsch Connector (Requires Wiring Harness)	10C753	20	886.00
Note: 72537057 Harness Adapter Required for Field Installation of 12 Pin Loader onto an 8 Pin Tractor					
	72537057M	Harness Conversion Kit For 8 Pin Tractor Harness Equipped with 12 Pin Loader			No Charge

MF911X LOADER

NON SELF-LEVELING

MASSEY FERGUSON®

Order Code	Catalog Number	Description	Factory Code	Approx. Weight (lb.)	List Price
BUCKETS - OPTIONAL					**Group 05**
		Skid Steer Style			
	72533150M	72-inch Skid Steer Material Bucket 180U, 17 cu ft	25C531	381	625.00
	72533151M	84-inch Skid Steer Material Bucket 210U, 19 cu ft	90C657	432	774.00
		Euro Style			
	72533685M	72-inch Euro Style Material Bucket 180U, 17 cu ft	20C571	381	672.00
	72533686M	84-inch Euro Style Material Bucket 210U, 19 cu ft	60C727	432	856.00
ATTACHMENTS - OPTIONAL					**Group 06**
		Skid Steer Style			
	72533692M	48-inch Pallet Fork - 3,520 lbs (1,600 kg) Capacity	05C1031	425	1,213.00
	72533988M	Round Bale Spike	05C606	144	713.00
		Euro Style			
	72556283M	48-inch Pallet Fork - 3,520 lbs (1,600 kg) Capacity	50C808	403	1,050.00
	72556284M	48-inch Pallet Fork - 5,500 lbs (2,500 kg) Capacity	64C948	403	1,232.00
	72533990M	Round Bale Spike	69C536	144	697.00
ACCESSORIES - OPTIONAL					**Group 07**
	72533937M	72-inch Bolt-On Cutting Edge (Bucket will Require Drilling Unless Noted in Bucket Description, for Use with 180U Buckets)	90C181		214.00
	72533938M	84-inch Bolt-On Cutting Edge	25C208		245.00
	72533693M	Log Grab (Requires 48-inch Pallet Fork) (Requires 3rd Function)	68C1450	187	1,884.00
	72556070M	Weld-On Hook Kit for Euro Tool Carrier	72C181	30	236.00

MF921X LOADER

NON SELF-LEVELING

MASSEY FERGUSON®

(F.O.B. SIMPSONVILLE, SC)

FEATURES

- One Piece Main Frame with Tapered Arms and Single Cross Member
- Quick Attach Loader Frame Mount with Pin Lock
- Built-in Parking Stands
- (2) 2.6 inch (65mm) Double Acting Lift Cylinders
- (2) 2.6 inch (65mm) Double Acting Bucket Cylinders
- Hydraulic Lines Routed Inside Main Frame for Protection and Visibility
- Galvanized Steel Pins with Bushings at Key Points
- Recessed Grease Zerk Points
- Universal Skid Steer or Euro Hook Type Implement Attachments
- Grille Guard Standard
- Fits MF4607M T4F and MF4608 T4i 2wd and 4wd Tractor Models
- Rated on MF4608 Tractor with 9.5-24 Front Tires and 16.9-30 Rear Tires
- Powder Painted with Corrosion Protection
- Bucket Level Indicator
- Lift Capacity to Full Height at 31.5 inches Forward of Pivot Pin: 1920 lbs
- Maximum Lift Height: 124 inches at Pivot
- Breakout Force: 3200 lbs
- Rated Hydraulic Pressure: 2828 PSI
- Maximum Roll Back Angle: 42 Degrees
- Maximum Dump Angle: 50 Degrees

NOTE: TRACTORS MUST BE PROPERLY BALLASTED FOR LOADER OPERATION. SEE OPERATOR'S MANUAL FOR INFORMATION.

NOTE: SPECIFICATIONS MAY VARY BETWEEN TRACTOR MODELS, TIRES AND HYDRAULIC OPTIONS.

Order Code	Catalog Number	Description	Factory Code	Approx. Weight (lb.)	List Price
		For a Complete Loader, Select One Order Code or Catalog Number from Group 01 through Group 04			
		For Additional Hydraulics, Buckets, and Accessories Order as Required From Groups 05 through 08			
BASE MACHINE					**Group 01**
XL21N1D AA00M	72533390	MF921X Base Loader - Skid Steer Style for MF4600M T4F . .	00C3553	810	4,180.00
XL21N1D 8A00M	72533824	MF921X Base Loader - Euro Style for MF4600M T4F	45C3890	800	4,577.00
SUBFRAME MOUNTING KIT					**Group 02**
	72533842M	Loader Uprights, Side Rails and Grille Guard for MF4600M . . **Non-Loader Provision** Tractors	65C1792		2,109.00
	72533841M	Loader Uprights and Grille Guard for MF4600M . . . . . **Loader Provision** Tractors	25C973		1,145.00
	72533658M	Subframe Kit for MF4608 Tier 4i Tractors	65C1792	375	2,109.00
LIGHT RELOCATION KIT					**Group 03**
	72533750M	Light Relocation Kit for MF4600 Tier 4i **Cab** Tractors . . . . . (**Required for ALL Cabs**)	20C027	15	32.00
HYDRAULICS					**Group 04**
	72533846M	Mid-Mount Hose Kit for MF4600M Tractors	05C266		313.00
	7066112M98	Joystick and Valve Kit required with Non-Loader Provision . . MF4600M Series			Order From Parts
	72533847M	Mid-Mount Hose Kit for MF4610LP Tractors . . . . . (Includes Joystick Controller Support for Dealer Installed Valve Set) Requires Coupler Conversion Kit 72533849M	40C292		344.00
	72533670M	Mid-Mount Hose Kit for MF4600 T4i Tractors . . . . . (Requires Coupler Conversion Kit 72533849M)	35C315	15	371.00

MF921X LOADER

NON SELF-LEVELING

MASSEY FERGUSON®

Order Code	Catalog Number	Description	Factory Code	Approx. Weight (lb.)	List Price
ADDITIONAL HYDRAULIC OPTIONS					**Group 05**
	72533671M	Soft Drive Ride Control System	60C506	10	596.00
	72533927M	Third Function Valve with 8 Pin Deutsch Connector (Requires Wiring Harness)	10C753	20	886.00
	72533673M	Third Function Wiring Harness with 8 Pin Deutsch Connector for MF4600 / 4600M	15C152	1	179.00
	72537056M	Third Function Valve with 12 Pin Deutsch Connector (Requires Wiring Harness)	10C753	20	886.00
Note: 72537057 Harness Adapter Required for Field Installation of 12 Pin Loader onto an 8 Pin Tractor					
	72537057M	Harness Conversion Kit For 8 Pin Tractor Harness Equipped with 12 Pin Loader			No Charge
	72533848M	Four Coupler Kit to Convert 3/8-inch ISO A to 3/8-inch Flat Face (Dealer Installed Only) For use on older loaders on MF4600M or MF4700	15C135		159.00
	72533849M	Four Coupler Kit to Convert 3/8-inch Flat Face to 3/8-inch ISO A (Dealer Installed Only) For use on new loaders on MF4600 T4i	15C135		159.00
BUCKETS - OPTIONAL					**Group 06**
		Skid Steer Style			
	72533150M	72-inch Skid Steer Material Bucket 180U, 17 cu ft	25C531	381	625.00
	72533151M	84-inch Skid Steer Material Bucket 210U, 19 cu ft	90C657	432	774.00
	72537037M	73-inch Skid Steer HD Material Bucket - SM 185	65C755		889.00
	72537004M	83-inch Skid Steer HD Material Bucket - SM 210	15C968		1,139.00
		Euro Style			
	72533685M	72-inch Euro Style Material Bucket 180U, 17 cu ft	20C571	381	672.00
	72533686M	84-inch Euro Style Material Bucket 210U, 19 cu ft	60C727	432	856.00
	72537002M	73-inch Euro Style Material Bucket - SM 185	00C714		840.00
	72537003M	83-inch Euro Style Material Bucket - SM 210	75C981		1,155.00
ATTACHMENTS - OPTIONAL					**Group 07**
		Skid Steer Style			
	72533692M	48-inch Pallet Fork - 3,520 lbs (1,600 kg) Capacity	05C1031	425	1,213.00
	72533988M	Round Bale Spike	05C606	144	713.00
	72533697M	Big Bale Fork with Extension	50C909	288	1,070.00
		Euro Style			
	72556283M	48-inch Pallet Fork - 3,520 lbs (1,600 kg) Capacity	50C808	403	1,050.00
	72556284M	48-inch Pallet Fork - 5,500 lbs (2,500 kg) Capacity	64C948	403	1,232.00
	72533990M	Round Bale Spike	69C536	144	697.00
	72556285M	Big Bale Fork with Extension	85C773	271	1,005.00

MF921X LOADER

NON SELF-LEVELING

MASSEY FERGUSON®

Order Code	Catalog Number	Description	Factory Code	Approx. Weight (lb.)	List Price
ACCESSORIES - OPTIONAL					**Group 08**
	72533937M	72-inch Bolt-On Cutting Edge (Bucket will Require Drilling Unless Noted in Bucket Description, for Use with 180U Buckets)	90C181		214.00
	72533938M	84-inch Bolt-On Cutting Edge	25C208		245.00
	72533693M	Log Grab (Requires 48-inch Pallet Fork) (Requires 3rd Function)	68C1450	187	1,884.00
	72556121M	Bolt-On Utility Grapple (Only Compatible with SM Buckets, Bucket Requires Drilling)	45C1935	440	2,277.00
	72556070M	Weld-On Hook Kit for Euro Tool Carrier	72C181	30	236.00

MF926X LOADER

MECHANICAL SELF-LEVELING

(F.O.B. SIMPSONVILLE, SC)

MASSEY FERGUSON®

FEATURES

- One Piece Main Frame with Tapered Arms and Single Cross Member
- Quick Attach Loader Frame Mount with Pin Lock
- Built-in Parking Stands
- (2) 2.4 inch (60mm) Double Acting Lift Cylinders
- (2) 2.6 inch (65mm) Double Acting, Equal Displacement Bucket Cylinders
- Hydraulic Lines Routed Inside Main Frame for Protection and Visibility
- Galvanized Steel Pins with Bushings at Key Points
- Recessed Grease Zerk Points
- Universal Skid Steer or Euro Hook Type Implement Attachments
- Grille Guard Standard
- Fits MF4607M T4F and MF4608 T4i 2wd and 4wd Tractor Models
- Rated on MF4608 Tractor with 9.5-24 Front Tires and 16.9-30 Rear Tires
- Powder Painted with Corrosion Protection
- Bucket Level Indicator
- Lift Capacity to Full Height at 31.5 inches Forward of Pivot Pin: 2680 lbs
- Maximum Lift Height: 124 inches at Pivot
- Breakout Force: 3480 lbs
- Rated Hydraulic Pressure: 2828 PSI
- Maximum Roll Back Angle: 42 Degrees
- Maximum Dump Angle: 50 Degrees

NOTE: TRACTORS MUST BE PROPERLY BALLASTED FOR LOADER OPERATION. SEE OPERATOR'S MANUAL FOR INFORMATION.

NOTE: SPECIFICATIONS MAY VARY BETWEEN TRACTOR MODELS, TIRES AND HYDRAULIC OPTIONS.

SUBJECT TO AVAILABILITY

Order Code	Catalog Number	Description	Factory Code	Approx. Weight (lb.)	List Price
		For a Complete Loader, Select One Order Code or Catalog Number from Group 01 through Group 04			
		For Additional Hydraulics, Buckets, and Accessories Order as Required From Groups 05 through 08			
BASE MACHINE					**Group 01**
XL26P1D AA00MM	72533392	MF926X Base Loader - Skid Steer Style for MF4600M	05C4465	800	5,253.00
XL26P1D 8A00MM	72533828	MF926X Base Loader - Euro Style for MF4600M	55C4915	790	5,783.00
SUBFRAME MOUNTING KIT					**Group 02**
	72533842M	Loader Uprights, Side Rails and Grille Guard for MF4600M **Non-Loader Provision** Tractors	65C1792		2,109.00
	72533841M	Loader Uprights and Grille Guard for MF4600M **Loader Provision** Tractors	25C973		1,145.00
	72533658M	Subframe Kit for MF4608 Tier 4i Tractors	65C1792	375	2,109.00
LIGHT RELOCATION KIT					**Group 03**
	72533750M	Light Relocation Kit for MF4600 Tier 4i **Cab** Tractors (**Required for ALL Cabs**)	20C027	15	32.00
HYDRAULICS					**Group 04**
	72533846M	Mid-Mount Hose Kit for MF4600M Tractors	05C266		313.00
	7066112M98	Joystick and Valve Kit required with Non-Loader Provision MF4600M Series			Order From Parts
	72533847M	Mid-Mount Hose Kit for MF4610LP Tractors (Includes Joystick Controller Support for Dealer Installed Valve Set) Requires Coupler Conversion Kit 72533849M	40C292		344.00
	72533670M	Mid-Mount Hose Kit for MF4600 T4i Tractors (Requires Coupler Conversion Kit 72533849M)	35C315	15	371.00

MF926X LOADER

MECHANICAL SELF-LEVELING

MASSEY FERGUSON®

Order Code	Catalog Number	Description	Factory Code	Approx. Weight (lb.)	List Price
ADDITIONAL HYDRAULIC OPTIONS					**Group 05**
	72533671M	Soft Drive Ride Control System	60C506	10	596.00
	72533926M	Third Function Valve with Deutsch Connector (Requires Wiring Harness 72533673M)	10C753	20	886.00
	72533673M	Third Function Wiring Harness for MF4600 / 4600M	15C152	1	179.00
	72533848M	Four Coupler Kit to Convert 3/8-inch ISO A to 3/8-inch Flat Face (Dealer Installed Only) For use on older loaders on MF4600M or MF4700	15C135		159.00
	72533849M	Four Coupler Kit to Convert 3/8-inch Flat Face to 3/8-inch ISO A (Dealer Installed Only) For use on new loaders on MF4600 T4i	15C135		159.00

Note: 72530394M Dealer Installed Joystick and Mid Valves for use with MF4600 Series Tractors WITHOUT Factory Joystick and Mid Valves should now be sourced through Batavia Parts #7066112M98 **(Order separately from Loader)**

BUCKETS - OPTIONAL					**Group 06**
		Skid Steer Style			
	72533150M	72-inch Skid Steer Material Bucket 180U, 17 cu ft	25C531	381	625.00
	72533151M	84-inch Skid Steer Material Bucket 210U, 19 cu ft	90C657	432	774.00
	72537037M	73-inch Skid Steer HD Material Bucket - SM 185	65C755		889.00
	72537004M	83-inch Skid Steer HD Material Bucket - SM 210	15C968		1,139.00
		Euro Style			
	72533685M	72-inch Euro Style Material Bucket 180U, 17 cu ft	20C571	381	672.00
	72533686M	84-inch Euro Style Material Bucket 210U, 19 cu ft	60C727	432	856.00
	72537002M	73-inch Euro Style Material Bucket - SM 185	00C714		840.00
	72537003M	83-inch Euro Style Material Bucket - SM 210	75C981		1,155.00

ATTACHMENTS - OPTIONAL					**Group 07**
		Skid Steer Style			
	72533692M	48-inch Pallet Fork - 3,520 lbs (1,600 kg) Capacity	05C1031	425	1,213.00
	72533988M	Round Bale Spike	05C606	144	713.00
	72533697M	Big Bale Fork with Extension	50C909	288	1,070.00
		Euro Style			
	72556283M	48-inch Pallet Fork - 3,520 lbs (1,600 kg) Capacity	50C808	403	1,050.00
	72556284M	48-inch Pallet Fork - 5,500 lbs (2,500 kg) Capacity	64C948	403	1,232.00
	72533990M	Round Bale Spike	69C536	144	697.00
	72556285M	Big Bale Fork with Extension	85C773	271	1,005.00

ACCESSORIES - OPTIONAL					**Group 08**
	72533937M	72-inch Bolt-On Cutting Edge (Bucket will Require Drilling Unless Noted in Bucket Description, for Use with 180U Buckets)	90C181		214.00
	72533938M	84-inch Bolt-On Cutting Edge	25C208		245.00
	72533693M	Log Grab (Requires 48-inch Pallet Fork) (Requires 3rd Function)	68C1450	187	1,884.00
	72556121M	Bolt-On Utility Grapple (Only Compatible with SM Buckets, Bucket Requires Drilling)	45C1935	440	2,277.00
	72556070M	Weld-On Hook Kit for Euro Tool Carrier	72C181	30	236.00

SUBJECT TO AVAILABILITY

MF931X LOADER

NON SELF-LEVELING

(F.O.B. SIMPSONVILLE, SC)

MASSEY FERGUSON®

FEATURES

- One Piece Main Frame with Tapered Arms and Single Cross Member
- Quick Attach Loader Frame Mount with Pin Lock
- Built-in Parking Stands
- (2) 2.8 inch (70mm) Double Acting Lift Cylinders
- (2) 2.8 inch (70mm) Double Acting Bucket Cylinders
- Hydraulic Lines Routed Inside Main Frame for Protection and Visibility
- Galvanized Steel Pins with Bushings at Key Points
- Recessed Grease Zerk Points
- Universal Skid Steer or Euro Hook Type Implement Attachments
- Grille Guard Standard
- Fits MF4609M and MF4610M T4F; MF4609, MF4610, 4610LP T4i; and MF4700 Tractor Models
- Rated on MF4610 Tractor with 11.2-24 Front Tires and 16.9-30 Rear Tires
- Powder Painted with Corrosion Protection
- Bucket Level Indicator
- Lift Capacity to Full Height at 31.5 inches Forward of Pivot Pin: 2140 lbs
- Maximum Lift Height: 136 inches at Pivot
- Breakout Force at 31.5 inches Forward of Pivot Pin: 3540 lbs
- Rated Hydraulic Pressure: 2828 PSI
- Maximum Roll Back Angle: 44 Degrees
- Maximum Dump Angle: 50 Degrees

NOTE: TRACTORS MUST BE PROPERLY BALLASTED FOR LOADER OPERATION. SEE OPERATOR'S MANUAL FOR INFORMATION.

NOTE: SPECIFICATIONS MAY VARY BETWEEN TRACTOR MODELS, TIRES AND HYDRAULIC OPTIONS.

Order Code	Catalog Number	Description	Factory Code	Approx. Weight (lb.)	List Price
		For a Complete Loader, Select One Order Code from Group 01 through Group 04			
		For Additional Hydraulics, Buckets and Accessories Order as Required From Groups 05 through 09			
BASE MACHINE					**Group 01**
XL31N1D AA00M	72533393	MF931X Base Loader - Skid Steer Style for MF4600M and MF4700	20C3376	775	3,972.00
XL31N1D 8A00M	72533830	MF931X Base Loader - Euro Style for MF4600M and MF4700	25C3880	760	4,565.00
		Loader Provisioned 4700 Platform Series Tractors Include the Factory Installed Loader Subframe Mounting Kit and Loader Joystick for the MF900X Series Loader. Requires 72533944M to Complete.			
		Loader Provisioned 4600M Series Tractors Include the Factory Installed Loader Side Rails, Joystick, and Mid-Mount Hose Kit. Platform requires 72533841M to Complete.			
SUBFRAME MOUNTING KIT					**Group 02**
	72533881M	Subframe and Grille Guard for MF4707 - 4710 Tractors	95C1212		1,427.00
	72533842M	Loader Uprights, Side Rails and Grille Guard for MF4600M **Non-Loader Provision** Tractors	65C1792		2,109.00
	72533841M	Loader Uprights and Grille Guard for MF4600M **Loader Provision** Tractors	25C973		1,145.00
	72533658M	Subframe Kit for MF4609 and 4610 Tier 4i Tractors	65C1792	375	2,109.00
LIGHT RELOCATION KIT					**Group 03**
	72533750M	Light Relocation Kit for MF4600 Tier 4i **Cab** Tractors (**Required for ALL Cabs**)	20C027	15	32.00

MF931X LOADER

NON SELF-LEVELING

Order Code	Catalog Number	Description	Factory Code	Approx. Weight (lb.)	List Price
HYDRAULICS					**Group 04**
Non Loader Provisioned Tractors					
	72533882M	2 Function Mechanical Hydraulic Kit with Joystick for MF4700 Platform (Does Not Include 3rd Function Wiring Harness)	20C826		972.00
	72533940M	2 Function Mechanical Hydraulic Kit, 8 Pin Deutsch, with Joystick for MF4700 Cab Tractors (Includes 3rd Function Wiring Harness)	90C997		1,174.00
	7066112M98	Joystick and Valve Kit for MF4600 Tier 4i, MF4600M T4F, for Tractors Without the Factory Installed Joystick			Order From Parts
	72533846M	Mid-Mount Hose Kit for MF4600M Tractors	05C266		313.00
	72533847M	Mid-Mount Hose Kit for MF4610LP Tractors (Includes Joystick Controller Support for Dealer Installed Valve Set) Requires Coupler Conversion Kit 72533849M	40C292		344.00
	72533670M	Mid-Mount Hose Kit for MF4600 T4i Tractors (Requires Coupler Conversion Kit 72533849M)	35C315	15	371.00
Loader Provisioned Tractors					
	72533944M	Hose Extension Kit for MF4700 Series Platform Tractors with LL001 (Required for Platform Tractors Equipped with LL001 Factory Installed Subframe and Hydraulic Set, less Loader from Factory)	85C068		81.00
3RD FUNCTION OPTIONS					**Group 05**
	72533927M	Third Function Valve with 8 Pin Deutsch Connector (Classic and Platform requires a Wiring Harness below)	10C753	20	886.00
	72533885M	Third Function Wiring Harness, 8 Pin Deutsch Connector, and Button Insert Kit for MF4700 Platform Tractors	15C203		239.00
	72533673M	Third Function Wiring Harness with 8 Pin Deutsch Connector for MF4600 / 4600M	15C152	1	179.00
	72537056M	Third Function Valve with 12 Pin Deutsch Connector (Requires Wiring Harness)	10C753	20	886.00
Note: 72537058 Harness Adapter Required for Field Installation of 8 Pin Loader onto a 12 Pin Tractor **72537057 Harness Adapter Required for Field Installation of 12 Pin Loader onto an 8 Pin Tractor**					
	72537058M	Harness Conversion Kit For 12 Pin Tractor Harness Equipped with 8 Pin Loader			No Charge
	72537057M	Harness Conversion Kit For 8 Pin Tractor Harness Equipped with 12 Pin Loader			No Charge
ADDITIONAL HYDRAULIC OPTIONS					**Group 06**
	72533671M	Soft Drive Ride Control System	60C506	10	596.00
	72533343M	4 Coupler Quick Release Single Lever for use on Loader Provisioned MF4700 Series with Factory Installed 2 Function Hydraulic Set	28C511		664.00
	72533848M	Four Coupler Kit to Convert 3/8-inch ISO A to 3/8-inch Flat Face (Dealer Installed Only)	15C135		159.00
	72533849M	Four Coupler Kit to Convert 3/8-inch Flat Face to 3/8-inch ISO A (Dealer Installed Only)	15C135		159.00

MF931X LOADER

NON SELF-LEVELING

MASSEY FERGUSON®

Order Code	Catalog Number	Description	Factory Code	Approx. Weight (lb.)	List Price
BUCKETS - OPTIONAL					**Group 07**
		Skid Steer Style			
	72533150M	72-inch Skid Steer Material Bucket 180U, 17 cu ft	25C531	381	625.00
	72533151M	84-inch Skid Steer Material Bucket 210U, 19 cu ft	90C657	432	774.00
	72537037M	73-inch Skid Steer HD Material Bucket - SM 185	65C755		889.00
	72537004M	83-inch Skid Steer HD Material Bucket - SM 210	15C968		1,139.00
		Euro Style			
	72533685M	72-inch Euro Style Material Bucket 180U, 17 cu ft	20C571	381	672.00
	72533686M	84-inch Euro Style Material Bucket 210U, 19 cu ft	60C727	432	856.00
	72537002M	73-inch Euro Style Material Bucket - SM 185	00C714		840.00
	72537003M	83-inch Euro Style Material Bucket - SM 210	75C981		1,155.00
ATTACHMENTS - OPTIONAL					**Group 08**
		Skid Steer Style			
	72533692M	48-inch Pallet Fork - 3,520 lbs (1,600 kg) Capacity	05C1031	425	1,213.00
	72533988M	Round Bale Spike	05C606	144	713.00
	72533697M	Big Bale Fork with Extension	50C909	288	1,070.00
		Euro Style			
	72556283M	48-inch Pallet Fork - 3,520 lbs (1,600 kg) Capacity	50C808	403	1,050.00
	72556284M	48-inch Pallet Fork - 5,500 lbs (2,500 kg) Capacity	64C948	403	1,232.00
	72533990M	Round Bale Spike	69C536	144	697.00
	72556285M	Big Bale Fork with Extension	85C773	271	1,005.00
ACCESSORIES - OPTIONAL					**Group 09**
	72533937M	72-inch Bolt-On Cutting Edge (Bucket will Require Drilling Unless Noted in Bucket Description, for Use with 180U Buckets)	90C181		214.00
	72533938M	84-inch Bolt-On Cutting Edge	25C208		245.00
	72533693M	Log Grab (Requires 48-inch Pallet Fork) (Requires 3rd Function)	68C1450	187	1,884.00
	72556121M	Bolt-On Utility Grapple (Only Compatible with SM Buckets, Bucket Requires Drilling)	45C1935	440	2,277.00
	72556070M	Weld-On Hook Kit for Euro Tool Carrier	72C181	30	236.00

MF936X LOADER

MECHANICAL SELF-LEVELING

(F.O.B. SIMPSONVILLE, SC)

MASSEY FERGUSON®

FEATURES

- One Piece Main Frame with Tapered Arms and Single Cross Member
- Quick Attach Loader Frame Mount with Pin Lock
- Built-in Parking Stands
- (2) 2.6 inch (65mm) Double Acting Lift Cylinders
- (2) 2.8 inch (70mm) Double Acting, Equal Displacement Bucket Cylinders
- Hydraulic Lines Routed Inside Main Frame for Protection and Visibility
- Galvanized Steel Pins with Bushings at Key Points
- Recessed Grease Zerk Points
- Universal Skid Steer or Euro Hook Type Implement Attachments
- Grille Guard Standard)
- Fits MF4609M & MF4610M T4F; MF4609, MF4610, 4610LP T4i; and MF4700 Tractor Models
- Rated on MF4610 Tractor with 11.2-24 Front Tires and 16.9-30 Rear Tires
- Powder Painted with Corrosion Protection
- Bucket Level Indicator
- Lift Capacity to Full Height at 31.5 inches Forward of Pivot Pin: 3430 lbs
- Maximum Lift Height: 136 inches at Pivot
- Breakout Force at 31.5 inches Forward of Pivot Pin: : 3660 lbs
- Rated Hydraulic Pressure: 2828 PSI
- Maximum Roll Back Angle: 44 Degrees
- Maximum Dump Angle: 50 Degrees

NOTE: TRACTORS MUST BE PROPERLY BALLASTED FOR LOADER OPERATION. SEE OPERATOR'S MANUAL FOR INFORMATION.

NOTE: SPECIFICATIONS MAY VARY BETWEEN TRACTOR MODELS, TIRES AND HYDRAULIC OPTIONS.

Order Code	Catalog Number	Description	Factory Code	Approx. Weight (lb.)	List Price

For a Complete Loader, Select One Order Code from Group 01 through Group 04

For Additional Hydraulics, Buckets and Accessories Order as Required From Groups 05 through 09

BASE MACHINE — Group 01

XL36P1D AA00MM	72533395	MF936X Base Loader - Skid Steer Style for MF4600M and MF4700	15C3960	920	4,659.00
XL36P1D 8A00MM	72533834	MF936X Base Loader - Euro Style for MF4600M and MF4700	70C4523	900	5,322.00

Loader Provisioned 4700 Platform Series Tractors Include the Factory Installed Loader Subframe Mounting Kit and Loader Joystick for the MF900X Series Loader. Requires 72533944M to Complete.

Loader Provisioned 4600M Series Tractors Include the Factory Installed Loader Side Rails, Joystick, and Mid-Mount Hose Kit. Platform requires 72533841M to Complete.

SUBFRAME MOUNTING KIT — Group 02

72533881M	Subframe and Grille Guard for MF4707 - 4710 Tractors	95C1212		1,427.00
72533842M	Loader Uprights, Side Rails and Grille Guard for MF4600M **Non-Loader Provision** Tractors	65C1792		2,109.00
72533841M	Loader Uprights and Grille Guard for MF4600M **Loader Provision** Tractors	25C973		1,145.00
72533658M	Subframe Kit for MF4609 and 4610 Tier 4i Tractors	65C1792	375	2,109.00

LIGHT RELOCATION KIT — Group 03

72533750M	Light Relocation Kit for MF4600 Tier 4i **Cab** Tractors (**Required for ALL Cabs**)	20C027	15	32.00

MF936X LOADER

MECHANICAL SELF-LEVELING

Order Code	Catalog Number	Description	Factory Code	Approx. Weight (lb.)	List Price
HYDRAULICS					**Group 04**
Non Loader Provisioned Tractors					
	72533882M	2 Function Mechanical Hydraulic Kit with Joystick for MF4700 Platform (Does Not Include 3rd Function Wiring Harness)	20C826		972.00
	72533940M	2 Function Mechanical Hydraulic Kit, 8 Pin Deutsch, with Joystick for MF4700 Cab Tractors (Includes 3rd Function Wiring Harness)	90C997		1,174.00
	7066112M98	Joystick and Valve Kit for MF4600 Tier 4i, MF4600M T4F, for Tractors Without the Factory Installed Joystick			Order From Parts
	72533846M	Mid-Mount Hose Kit for MF4600M Tractors	05C266		313.00
	72533847M	Mid-Mount Hose Kit for MF4610LP Tractors (Includes Joystick Controller Support for Dealer Installed Valve Set) Requires Coupler Conversion Kit 72533849M	40C292		344.00
	72533670M	Mid-Mount Hose Kit for MF4600 T4i Tractors (Requires Coupler Conversion Kit 72533849M)	35C315	15	371.00
Loader Provisioned Tractors					
	72533944M	Hose Extension Kit for MF4700 Series Platform Tractors with LL001 (Required for Platform Tractors Equipped with LL001 Factory Installed Subframe and Hydraulic Set, less Loader from Factory)	85C068		81.00
3RD FUNCTION OPTIONS					**Group 05**
	72533926M	Third Function Valve with 8 Pin Deutsch Connector (Platform requires a Wiring Harness below)	10C753	20	886.00
	72533885M	Third Function Wiring Harness, 8 Pin Deutsch Connector, and Button Insert Kit for MF4700 Platform Tractors (Required for Third Function)	15C203		239.00
	72533673M	Third Function Wiring Harness with 8 Pin Deutsch Connector for MF4600M)	15C152	1	179.00
	72537056M	Third Function Valve with 12 Pin Deutsch Connector (Requires Wiring Harness)	10C753	20	886.00
Note: 72537058 Harness Adapter Required for Field Installation of 8 Pin Loader onto a 12 Pin Tractor **72537057 Harness Adapter Required for Field Installation of 12 Pin Loader onto an 8 Pin Tractor**					
	72537058M	Harness Conversion Kit For 12 Pin Tractor Harness Equipped with 8 Pin Loader			No Charge
	72537057M	Harness Conversion Kit For 8 Pin Tractor Harness Equipped with 12 Pin Loader			No Charge
ADDITIONAL HYDRAULIC OPTIONS					**Group 06**
	72533671M	Soft Drive Ride Control System	60C506	10	596.00
	72533343M	4 Coupler Quick Release Single Lever for use on Loader Provisioned MF4700 Series with Factory Installed 2 Function Hydraulic Set	28C511		664.00
	72533848M	Four Coupler Kit to Convert 3/8-inch ISO A to 3/8-inch Flat Face (Dealer Installed Only)	15C135		159.00
	72533849M	Four Coupler Kit to Convert 3/8-inch Flat Face to 3/8-inch ISO A (Dealer Installed Only)	15C135		159.00

MF936X LOADER

MECHANICAL SELF-LEVELING

MASSEY FERGUSON®

Order Code	Catalog Number	Description	Factory Code	Approx. Weight (lb.)	List Price
BUCKETS - OPTIONAL					**Group 07**
		Skid Steer Style			
	72533150M	72-inch Skid Steer Material Bucket 180U, 17 cu ft	25C531	381	625.00
	72533151M	84-inch Skid Steer Material Bucket 210U, 19 cu ft	90C657	432	774.00
	72537037M	73-inch Skid Steer HD Material Bucket - SM 185	65C755		889.00
	72537004M	83-inch Skid Steer HD Material Bucket - SM 210	15C968		1,139.00
		Euro Style			
	72533685M	72-inch Euro Style Material Bucket 180U, 17 cu ft	20C571	381	672.00
	72533686M	84-inch Euro Style Material Bucket 210U, 19 cu ft	60C727	432	856.00
	72537002M	73-inch Euro Style Material Bucket - SM 185	00C714		840.00
	72537003M	83-inch Euro Style Material Bucket - SM 210	75C981		1,155.00
ATTACHMENTS - OPTIONAL					**Group 08**
		Skid Steer Style			
	72533692M	48-inch Pallet Fork - 3,520 lbs (1,600 kg) Capacity	05C1031	425	1,213.00
	72533988M	Round Bale Spike	05C606	144	713.00
	72533697M	Big Bale Fork with Extension	50C909	288	1,070.00
		Euro Style			
	72556283M	48-inch Pallet Fork - 3,520 lbs (1,600 kg) Capacity	50C808	403	1,050.00
	72556284M	48-inch Pallet Fork - 5,500 lbs (2,500 kg) Capacity	64C948	403	1,232.00
	72533990M	Round Bale Spike	69C536	144	697.00
	72556285M	Big Bale Fork with Extension	85C773	271	1,005.00
ACCESSORIES - OPTIONAL					**Group 09**
	72533937M	72-inch Bolt-On Cutting Edge (Bucket will Require Drilling Unless Noted in Bucket Description, for Use with 180U Buckets)	90C181		214.00
	72533938M	84-inch Bolt-On Cutting Edge	25C208		245.00
	72533693M	Log Grab (Requires 48-inch Pallet Fork) (Requires 3rd Function)	68C1450	187	1,884.00
	72556121M	Bolt-On Utility Grapple (Only Compatible with SM Buckets, Bucket Requires Drilling)	45C1935	440	2,277.00
	72556070M	Weld-On Hook Kit for Euro Tool Carrier	72C181	30	236.00

MASSEY FERGUSON®

RESERVED

MFDL95 COMPACT LOADER

QUICK ATTACH MOUNT LOADER

MASSEY FERGUSON®

(F.O.B. SIMPSONVILLE, SC)

FEATURES

- One Piece Main Frame with Tapered Arms and Single Cross Member
- Quick Attach Loader Frame Mount with Pin Lock
- Built-in Parking Stands
- (2) 1.6 inch Double Acting Lift Cylinders
- (2) 1.75 inch Double Acting Bucket Cylinders
- Regenerative Hydraulics for Simultaneous Operation of Lift/Lower and Curl/Dump Functions
- Hydraulic Lines Routed Inside Main Frame for Protection and Visibility
- Galvanized Steel Pins
- Recessed Grease Zerk Points
- 48-inch Standard Duty Pin-Type Bucket
- Grille Guard Standard
- Fits all GC1700 Series Tractors
- Maximum Lift Height: 72.8 Inches
- Lift Capacity to Full Height at 19.6 inches Forward of Pivot Pin: 580 lbs
- Breakout Force: 920 lbs
- Rated Hydraulic Pressure: 1914 PSI

NOTE: TRACTORS MUST BE PROPERLY BALLASTED FOR LOADER OPERATION. SEE OPERATOR'S MANUAL FOR INFORMATION.

NOTE: SPECIFICATIONS MAY VARY BETWEEN TRACTOR MODELS, TIRES AND HYDRAULIC OPTIONS.

SUBJECT TO AVAILABILITY

Order Code	Catalog Number	Description	Factory Code	Approx. Weight (lb.)	List Price
		For a Complete Loader, Select One Order Code or Catalog Number from Group 01 though Group 03			
		For Buckets and Accessories Order as Required from Groups 04 and 05			
BASE MACHINE					**Group 01**
ZL09A1E 0M000M	72533969	MFDL95 Base Loader - Pin Type Style, Includes 3/8 inch Hoses and 3/8 inch Couplers	10C1688	275	1,986.00
SUBFRAME MOUNTING KIT					**Group 02**
	72533646M	Subframe Kit and Grille Guard for GC1700 Series Tractors	95C447	115	527.00
HYDRAULICS					**Group 03**
	72533510M	Hydraulic Valve Kit for GC1705 Non-Factory Valves with 3/8 inch Female Couplers (Requires Qty 1 - 6259420M1 Flange and Qty 2 - 3702462M1 "O" Ring from AGCO Parts, Batavia)	65C670	60	789.00
BUCKETS - OPTIONAL					**Group 04**
	72533674M	48-inch Pin Type Material Bucket	80C363	135	428.00
	72533916M	54-inch Pin Type Material Bucket	75C403		475.00
	72533144M	48-inch Skid Steer Material Bucket	40C377		444.00
	72533145M	54-inch Skid Steer Material Bucket	00C425		500.00
ACCESSORIES - OPTIONAL					**Group 05**
	72533918M	Quick Attach Tool Carrier for 48- or 54-inch Pin Type Buckets	65C228		269.00
	72533155M	Skid Steer Tool Carrier (Required with 72533144M and 72533145M)	00C306		360.00

MFL100E COMPACT LOADER

QUICK ATTACH MOUNT LOADER

MASSEY FERGUSON®

(F.O.B. SIMPSONVILLE, SC)

FEATURES

- One Piece Main Frame with Tapered Arms and Single Cross Member
- Quick Attach Loader Frame Mount with Pin Lock
- Built-in Parking Stands
- (2) 1.78 inch Double Acting Lift Cylinders
- (2) 1.78 inch Double Acting Bucket Cylinders
- Hydraulics for Operation of Lift/Lower and Curl/Dump Functions
- Hydraulic Lines Routed Inside Main Frame for Protection and Visibility
- Galvanized Steel Pins
- Recessed Grease Zerk Points
- 54-inch Standard Duty Pin-Type Bucket
- Grille Guard Standard
- Fits MF1526 Tractors
- Maximum Lift Height: 83 Inches @ Pivot Pin
- Lift Capacity to Full Height at 19.5 inches Forward of Pivot Pin: 820 lbs
- Breakout Force: 1750 lbs at Pivot Pin
- Rated Hydraulic Pressure: 2132 PSI
- Maximum Roll Back Angle: 32 degrees
- Dump Angle: 42 degrees

- **NOTE:** Compatible with MF1505 Mid-Mount Mower

NOTE: TRACTORS MUST BE PROPERLY BALLASTED FOR LOADER OPERATION. SEE OPERATOR'S MANUAL FOR INFORMATION.

NOTE: SPECIFICATIONS MAY VARY BETWEEN TRACTOR MODELS, TIRES AND HYDRAULIC OPTIONS.

SUBJECT TO AVAILABILITY

Order Code	Catalog Number	Description	Factory Code	Approx. Weight (lb.)	List Price
For a Complete Loader, Select One Order Code or Catalog Number from Group 01 though Group 03					
For Buckets and Accessories Order as Required from Groups 04 and 05					
BASE MACHINE					**Group 01**
CL12A6E 0L000M	72533912	MFL100E Base Loader - Pin Type Style, Includes Hoses	00C1632	295	1,920.00
SUBFRAME MOUNTING KIT					**Group 02**
	72533914M	Subframe Kit and Grille Guard for MF1526 Tractors	30C525	145	618.00
HYDRAULICS					**Group 03**
	72533929M	Direct Control Valve Kit for MF1526, Direct Control Valve with Float, for Operation of the Lift/Lower and Curl/Dump Functions (Includes Hoses to Base Loader)	60C608	28	716.00
BUCKETS - OPTIONAL					**Group 04**
	72533916M	54-inch Pin Type Material Bucket	75C403	146	475.00
	72533145M	54-inch Skid Steer Material Bucket	00C425		500.00
ACCESSORIES - OPTIONAL					**Group 05**
	72533918M	Quick Attach Tool Carrier for 54-inch Pin Type Bucket	65C228	41	269.00
	72533155M	Skid Steer Tool Carrier (Required with 72533145M)	00C306		360.00

MFL105E COMPACT LOADER

QUICK ATTACH MOUNT LOADER

(F.O.B. SIMPSONVILLE, SC)

MASSEY FERGUSON®

FEATURES

- One Piece Main Frame with Tapered Arms and Single Cross Member
- Quick Attach Loader Frame Mount with Pin Lock
- Built-in Parking Stands
- Bucket Level Indicator
- (2) 2.0 inch Double Acting Lift Cylinders
- (2) 2.2 inch Double Acting Bucket Cylinders
- Hydraulic Lines Routed Inside Main Frame for Protection and Visibility
- Galvanized Steel Pins
- Recessed Grease Zerk Points
- Skid Steer or Pin-Type Implement Attachments
- Grille Guard Standard
- Fits all MF1700E Series Economy Compact Tractor Models with R1 AG, R3 Turf or R4 Industrial Tires
- Maximum Lift Height: 95.7 inches at Pivot
- Lift Capacity to Full Height at 19.6 inches Forward of Pivot Pin: 830 lbs
- Breakout Force: 1460 lbs
- Rated Hydraulic Pressure: 2132 PSI

NOTE: TRACTORS MUST BE PROPERLY BALLASTED FOR LOADER OPERATION. SEE OPERATOR'S MANUAL FOR INFORMATION.

NOTE: SPECIFICATIONS MAY VARY BETWEEN TRACTOR MODELS, TIRES AND HYDRAULIC OPTIONS.

Order Code	Catalog Number	Description	Factory Code	Approx. Weight (lb.)	List Price
For a Complete Loader, Select One Order Code or Catalog Number from Group 01 through Group 03					
For Additional Hydraulic Options, Buckets and Accessories Order as Required from Groups 04 through 06					
BASE MACHINE					**Group 01**
ZL13A1E 0W000M	72533627	MFL105E Base Loader - Pin Type Style	85C1904		2,241.00
SUBFRAME MOUNTING KIT					**Group 02**
	72533980M	Subframe Kit and Grille Guard for MF1726E, MF1734E and MF1739E Tractors	20C877	200	1,032.00
HYDRAULICS					**Group 03**
	72533298M	Direct Control Valve Kit for MF1700E Tractors, Direct Control Valve with Float, for Operation of the Lift/Lower and Curl/Dump Functions (Includes Hoses to Base Loader)	05C708	60	833.00
3RD FUNCTION HYDRAULIC OPTIONS					**Group 04**
	72533997M	Third Function Valve with Deutsch Connector (Requires Wiring Harness)	45C660	20	777.00
	72533935M	Third Function Wiring Harness with Knob	15C186	2	219.00
CONNECTION AND BUCKET OPTIONS					**Group 05**
	72533675M	60-inch Pin Type Material Bucket	60C574	195	676.00
	72533146M	60-inch Skid Steer Material Bucket (Requires 72533397M)	90C470	195	554.00
ATTACHMENTS AND ACCESSORIES					**Group 06**
	72533397M	Skid Steer Type Bucket Quick Attach Tool Carrier Kit	25C480		565.00
	72533690M	38-inch Skid Steer Pallet Fork (Requires 72533397M) 2,205 lbs (1000 kg) Capacity	65C874	350	1,029.00

SUBJECT TO AVAILABILITY

MASSEY FERGUSON®

RESERVED

MFDL125 COMPACT LOADER

QUICK ATTACH MOUNT LOADER

(F.O.B. SIMPSONVILLE, SC)

MASSEY FERGUSON®

FEATURES

- One Piece Main Frame with Tapered Arms and Single Cross Member
- Quick Attach Loader Frame Mount with Pin Lock
- Built-in Parking Stands
- Bucket Level Indicator
- (2) 2.4 inch Double Acting Lift Cylinders
- (2) 2.4 inch Double Acting Bucket Cylinders
- Hydraulic Lines Routed Inside Main Frame for Protection and Visibility
- 3rd Function Capable, Soft-Drive Capable
- Galvanized Steel Pins
- Recessed Grease Zerk Points
- Universal Skid Steer
- Grille Guard Standard
- Fits MF1735M and MF1740M Compact Tractors and MF1736 and MF1742 Compact Tractor Models with R1 AG, R3 Turf, or R4 Industrial Tires
- Maximum Lift Height: 102.4 Inches at Pivot
- Lift Capacity to Full Height at 19.6 inches Forward of Pivot Pin: 1300 lbs
- Breakout Force: 2190 lbs
- Rated Hydraulic Pressure: 2277 PSI

NOTE: TRACTORS MUST BE PROPERLY BALLASTED FOR LOADER OPERATION. SEE OPERATOR'S MANUAL FOR INFORMATION.

NOTE: SPECIFICATIONS MAY VARY BETWEEN TRACTOR MODELS, TIRES AND HYDRAULIC OPTIONS.

SUBJECT TO AVAILABILITY

Order Code	Catalog Number	Description	Factory Code	Approx. Weight (lb.)	List Price
For a Complete Loader, Select One Order Code or Catalog Number from Group 01 through Group 03					
For Additional Hydraulics, Buckets and Accessories Order as Required from Groups 04 through 07					
BASE MACHINE					**Group 01**
ZL16N1E AW000M	72533373	MFDL125 Base Loader - Skid Steer Style	70C2619	500	3,082.00
SUBFRAME MOUNTING KIT					**Group 02**
	ACW3817780M	Subframe Kit and Grille Guard for MF1735M/1740M Tractors	90C657		774.00
	72533981M	Subframe Kit with Grille Guard for MF1736/1742 Tractors	90C657		774.00
HYDRAULICS					**Group 03**
	72533663M	Mid-Mount Hose Kit for MF1700 Series Tractors (Required to Connect Loader Hoses to Factory Installed Tractor Mid-Valves)	20C197	10	232.00
ADDITIONAL HYDRAULIC OPTIONS					**Group 04**
	72533665M	Soft Drive Ride Control System	35C502	20	591.00
	72533997M	Third Function Valve with Deutsch Connector (Requires Wiring Harness)	45C660	20	777.00
	72533667M	Wiring Harness for Third Function with Knob	05C164	2	193.00

MFDL125 COMPACT LOADER

QUICK ATTACH MOUNT LOADER

MASSEY FERGUSON®

Order Code	Catalog Number	Description	Factory Code	Approx. Weight (lb.)	List Price
BUCKETS - OPTIONAL					**Group 05**
	72533147M	66-inch Skid Steer Material Bucket	15C475	212	559.00
	72533148M	72-inch Skid Steer Material Bucket	75C505	228	595.00
	72533149M	72-inch High Volume HD Skid Steer Material Bucket Pre-Drilled to Accept a Bolt-on Cutting Edge	15C866	345	1,019.00
ATTACHMENTS - OPTIONAL					**Group 06**
	72533690M	38-inch Skid Steer Pallet Fork 2,205 lbs (1000 kg) Capacity	65C874	350	1,029.00
	72533988M	Round Bale Spike for Skid Steer	05C606	144	713.00
ACCESSORIES - OPTIONAL					**Group 07**
	72533937M	72-inch Bolt-On Cutting Edge (Compatible with 72533149)	90C181		214.00
	72533986M	Grille Guard (MF1700E, MF1700 Premium, and 2700E Tractors) For use on Tractor without Loader	35C162		191.00
	72533987M	Front Weight Bracket Kit (Required and ONLY Compatible with 72533986M Grille Guard for MF1700E MF1700 Premium, and 2700E Tractors)	50C110		130.00

SUBJECT TO AVAILABILITY

MFDL135 COMPACT LOADER

QUICK ATTACH MOUNT LOADER

(F.O.B. SIMPSONVILLE, SC)

MASSEY FERGUSON®

FEATURES

- One Piece Main Frame with Tapered Arms and Single Cross Member
- Quick Attach Loader Frame Mount with Pin Lock
- Built-in Parking Stands
- Bucket Level Indicator
- (2) 2.75 inch Double Acting Lift Cylinders
- (2) 2.75 inch Double Acting Bucket Cylinders
- Hydraulic Lines Routed Inside Main Frame for Protection and Visibility
- 3rd Function Capable, Soft-Drive Capable
- Galvanized Steel Pins
- Recessed Grease Zerk Points
- Universal Skid Steer
- Grille Guard Standard
- Fits MF1750M, 1755M, 1760M, 1749, 1754 1758, 1759 Compact Tractor Models with R1 AG, R3 Turf, or R4 Industrial Tires
- Maximum Lift Height: 110.2 Inches at Pivot
- Lift Capacity to Full Height at 19.6 inches Forward of Pivot Pin: 1760 lbs
- Breakout Force: 2870 lbs
- Rated Hydraulic Pressure: 2277 PSI

NOTE: TRACTORS MUST BE PROPERLY BALLASTED FOR LOADER OPERATION. SEE OPERATOR'S MANUAL FOR INFORMATION.

NOTE: SPECIFICATIONS MAY VARY BETWEEN TRACTOR MODELS, TIRES AND HYDRAULIC OPTIONS

SUBJECT TO AVAILABILITY

Order Code	Catalog Number	Description	Factory Code	Approx. Weight (lb.)	List Price
For a Complete Loader, Select One Order Code or Catalog Number from Group 01 through Group 03					
For Additional Hydraulics, Buckets and Accessories Order as Required from Groups 04 through 07					
BASE MACHINE					**Group 01**
ZL18N1E AW000M	72533376	MFDL135 Base Loader - Skid Steer Style	60C2920	670	3,436.00
SUBFRAME MOUNTING KITS					**Group 02**
	ACW3817790M	Subframe Kit for MF1750M Mech and HST Tractors, and 1755M Mech Tractors Only	75C675	295	795.00
	ACW3817800M	Subframe Kit for MF1760M Mech Tractor Only	75C675	295	795.00
	ACW4948050M	Subframe Kit for MF1755M and 1760M HST Tractors Only	75C675	295	795.00
	72533982M	Subframe Kit for MF1749 Tractors	75C675	295	795.00
	72533983M	Subframe Kit for MF1754 with Shuttle Transmission	75C675	295	795.00
	72533984M	Subframe Kit for MF1754 and 1758 with Hydro Transmission	75C675	295	795.00
	72533985M	Subframe Kit for MF1759	75C675	295	795.00
HYDRAULICS					**Group 03**
	72533663M	Mid-Mount Hose Kit for MF1700 Series Tractors (Required to Connect Loader Hoses to Factory Installed Tractor Mid-Valves)	20C197	10	232.00
ADDITIONAL HYDRAULIC OPTIONS					**Group 04**
	72533665M	Soft Drive Ride Control System	35C502	20	591.00
	72533997M	Third Function Valve with Deutsch Connector (Requires Wiring Harness)	45C660	20	777.00
	72533667M	Wiring Harness for Third Function with Knob	05C164	2	193.00

MFDL135 COMPACT LOADER

QUICK ATTACH MOUNT LOADER

MASSEY FERGUSON®

Order Code	Catalog Number	Description	Factory Code	Approx. Weight (lb.)	List Price
BUCKETS - OPTIONAL					**Group 05**
	72533148M	72-inch Skid Steer Material Bucket	75C505	228	595.00
	72533149M	72-inch High Volume HD Skid Steer Material Bucket Pre-Drilled to Accept a Bolt-on Cutting Edge	15C866	345	1,019.00
ATTACHMENTS - OPTIONAL					**Group 06**
	72533690M	38-inch Skid Steer Pallet Fork 2,205 lbs (1000 kg) Capacity	65C874	350	1,029.00
	72533988M	Round Bale Spike for Skid Steer	05C606	144	713.00
ACCESSORIES - OPTIONAL					**Group 07**
	72533937M	72-inch Bolt-On Cutting Edge (Compatible with 72533149)	90C181		214.00
	72533986M	Grille Guard (MF1700E, MF1700 Premium, and 2700E Tractors) For use on Tractor without Loader	35C162		191.00
	72533987M	Front Weight Bracket Kit (Required and ONLY Compatible with 72533986M Grille Guard for MF1700E MF1700 Premium, and 2700E Tractors	50C110		130.00

SUBJECT TO AVAILABILITY

MFL135E UTILITY LOADER

QUICK ATTACH MOUNT LOADER

(F.O.B. SIMPSONVILLE, SC)

MASSEY FERGUSON®

FEATURES

- One Piece Main Frame with Tapered Arms and Single Cross Member
- Quick Attach Loader Frame Mount with Pin Lock
- Built-in Parking Stands
- Bucket Level Indicator
- (2) 2.75 inch Double Acting Lift Cylinders
- (2) 2.75 inch Double Acting Bucket Cylinders
- Hydraulic Valve with Integrated Joystick Mount to Right Side Loader Subframe
- Hydraulic Lines Routed Inside Main Frame for Protection and Visibility
- Galvanized Steel Pins
- Recessed Grease Zerk Points
- Universal Skid Steer or Pin-Type Implement Attachments
- Grille Guard Standard
- Fits all MF2600H T4F Series 2wd Tractor Models
- Fits all MF2700E Series Tractor Models
- Fits all MF2600 T4i Series 2wd Tractor Models with R1 AG or R4 Industrial Tires
- Maximum Lift Height: 110.2 Inches at Pivot
- Lift Capacity to Full Height at 19.6 inches Forward of Pivot Pin: 1770 lbs
- Breakout Force: 2870 lbs
- Rated Hydraulic Pressure: 2277 PSI

NOTE: TRACTORS MUST BE PROPERLY BALLASTED FOR LOADER OPERATION. SEE OPERATOR'S MANUAL FOR INFORMATION.

NOTE: SPECIFICATIONS MAY VARY BETWEEN TRACTOR MODELS, TIRES AND HYDRAULIC OPTIONS.

SUBJECT TO AVAILABILITY

Order Code	Catalog Number	Description	Factory Code	Approx. Weight (lb.)	List Price
For a Complete Loader, Select One Order Code or Catalog Number from Group 01 through Group 03					
For Additional Hydraulics, Buckets and Accessories Order as Required from Groups 04 through 07					
BASE MACHINE					**Group 01**
ZL18A1E 0W000M	72533631	MFL135E Base Loader - Pin Type Style	40C2230	570	2,624.00
SUBFRAME MOUNTING KITS					**Group 02**
	72533984M	Subframe Kit for MF2700E Series Tractors	75C675		795.00
	72533839M	Subframe Kit for MF2600H T4F Series 2wd Tractors	40C649		764.00
	72533655M	Subframe Kit for MF2605 and MF2615 - 3 Cylinder 2wd with Grille Guard	75C709	405	835.00
	72533656M	Subframe Kit for MF2635 - 4 Cylinder 2wd with Grille Guard	75C675	475	795.00
HYDRAULICS					**Group 03**
	72533299M	Direct Control Valve Kit for MF2700E Series, Direct Control Valve with Float, for Operation of the Lift/Lower and Curl/Dump Functions (Includes Hoses to Base Loader)	40C751	60	884.00
	72533229M	Direct Control Valve Kit for MF2600H T4F Series 2wd, Direct Control Valve with Float, for Operation of the Lift/Lower and Curl/Dump Functions (Includes Hoses to Base Loader)	40C751	60	884.00
	72533932M	Direct Control Valve Kit for MF2600 T4i Series 2wd, Direct Control Valve with Float, for Operation of the Lift/Lower and Curl/Dump Functions (Includes Intermediate Hoses to Base Loader - Roquet)	30C831	60	978.00

MFL135E UTILITY LOADER

QUICK ATTACH MOUNT LOADER

MASSEY FERGUSON®

Order Code	Catalog Number	Description	Factory Code	Approx. Weight (lb.)	List Price
3RD FUNCTION HYDRAULIC OPTIONS					**Group 04**
	72533997M	Third Function Valve with Deutsch Connector (Requires Wiring Harness)	45C660	20	777.00
	72533512M	Third Function Wiring Harness for MF2600H Series Includes Knob (Roquet Valve)	75C216		255.00
	72533935M	Third Function Wiring Harness for MF2700E Series Includes Knob (Roquet Valve)	15C186	2	219.00
CONNECTION AND BUCKET OPTIONS					**Group 05**
	72533148M	72-inch Skid Steer Material Bucket	75C505	228	595.00
	72533149M	72-inch High Volume HD Skid Steer Material Bucket Pre-Drilled to Accept a Bolt-on Cutting Edge	15C866	345	1,019.00
	72533677M	72-inch Pin Type Material Bucket	00C476	230	560.00
	72533397M	Skid Steer Type Bucket Quick Attach Tool Carrier Kit	25C480		565.00
ATTACHMENTS AND ACCESSORIES					**Group 06**
	72533690M	38-inch Skid Steer Pallet Fork 2,205 lbs (1000 kg) Capacity	65C874	350	1,029.00
	72533988M	Round Bale Spike for Skid Steer	05C606	144	713.00
ACCESSORIES - OPTIONAL					**Group 07**
	72533937M	72-inch Bolt-On Cutting Edge (Compatible with 72533149)	90C181		214.00
	72533986M	Grille Guard (MF1700E, MF1700 Premium, and 2700E Tractors) For use on Tractor without Loader	35C162		191.00
	72533987M	Front Weight Bracket Kit (Required and ONLY Compatible with 72533986M Grille Guard for MF1700E MF1700 Premium, and 2700E Tractors	50C110		130.00

SUBJECT TO AVAILABILITY

MFFL.3522 / MFFL.3615 LOADERS

NON SELF-LEVELING / MECHANICAL SELF-LEVELING

(F.O.B. Alliston, Ontario or Telford, Tennessee)

MASSEY FERGUSON®

FEATURES

- One Piece 4 mm High Tensile Main Frame with Tapered and Embossed Arms
- Quick Attach Implement Mounting with Euro Style Single Lever Locking System
- 82 mm Arm Profile
- 80 mm Double Acting Lift Cylinders **(FL.3522)**
- 70 mm Double Acting Lift Cylinders **(FL.3615)**
- 75 mm Double Acting Bucket Cylinders **(FL.3522)**
- 75 mm Double Acting, Equal Displacement Bucket Cylinders **(FL.3615)**
- Industrial Grade Hydraulic Fittings and Twin Braided Hoses, Incorporated Internally Inside Loader Boom
- Central Valve, Equalized Oil Distribution Valve with Incorporated Relief Valves
- 4-Flat Face Hydraulic Tips on Boom and Bucket Circuits
- Protective Hose Cover
- Compatible with 4700 Global Series Tractors
- Lock and Go Loader/Subframe Connection System
- Pivots Are Greasable and Include Industrial Grade Pins and Bushings
- Powder Painted with Corrosion Protection
- Bucket Level Indicator
- Front Bumper Guard (With Subframe Set)
- Buckets Have Heavy Duty, Welded-On Cutting Edge, Box Beam Section for Stiffness and Torsional Rigidity and Lateral Reinforcing Bars
- 140" (3.55 m) Lift Height to Pivot Pin
- **FL.3522:** 2760 lb. (1252 kg) Lift Capacity to Full Height, 31.5" (800 mm) Forward of Pivot Pin per ASABE 301.3 @ 2828 PSI
- **FL.3615:** 3420 lb. (1551 kg) Lift Capacity to Full Height, 31.5" (800 mm) Forward of Pivot Pin per ASABE 301.3 @ 2828 PSI
- Maximum Roll Back Angle: 58 Degrees
- Maximum Dump Angle: 58 Degrees

NOTE: TRACTORS MUST BE PROPERLY BALLASTED FOR LOADER OPERATION. SEE OPERATOR'S MANUAL

NOTE: SPECIFICATIONS MAY VARY BETWEEN MODELS, TIRE EQUIPMENT AND HYDRAULIC OPTIONS

FOR MORE INFORMATION ON DEALER INSTALLED LOADER OPTIONS SEE PAGE 70

Order Code	Catalog Number	Description	Factory Code	Approx. Weight (lb.)	List Price
BASE MACHINE - REQUIRED					**Group 01**
MF FL.3522	72533173	MFFL.3522 Base Loader, Non Self-Leveling Euro . . . . . with 4 Flat Face 3/8-inch Couplers and 8 Pin Connector, Includes Soft Drive with Electric Shutoff	40C4508	990	5,304.00
MF FL.3522	72537041	MFFL.3522 Base Loader, Non Self-Leveling Skid Steer . . . . with 4 Flat Face 3/8-inch Couplers and 12 Pin Connector, Includes Soft Drive with Electric Shutoff	40C4508	TBD	5,304.00
MF FL.3615	72537045	MFFL.3615 Base Loader, Mechanical Self-Leveling Euro . . . with 4 Flat Face 3/8-inch Couplers and 12 Pin Connector, Includes Soft Drive with Electric Shutoff	40C5341	1150	6,284.00
MF FL.3615	72537046	MFFL.3615 Base Loader, Mechanical Self-Leveling Skid Steer with 4 Flat Face 3/8-inch Couplers and 12 Pin Connector, Includes Soft Drive with Electric Shutoff	40C5341	TBD	6,284.00

Loader Ready or Loader Provisioned Tractors Include the Factory Installed Loader Subframe Mounting Kit and Loader Joystick for this Series Loader. Order the Base Loader Above (with Hose Extension Kit for Platform) and Buckets or Attachments to Complete the Loader.

DEALER INSTALLED SUBFRAME MOUNTING KITS					**Group 02**
	72533881M	Subframe and Grille Guard for MF4707 - 4710 Global . . . . . Series Tractors (Not for use on MF4707 Classic Platform)	95C1212		1,427.00

Order Code	Catalog Number	Description	Factory Code	Approx. Weight (lb.)	List Price
DEALER INSTALLED 2 FUNCTION OPTIONS					**Group 03**
Non Loader Provisioned Tractors					
	72533882M	2 Function Mechanical Hydraulic Kit with Joystick for **MF4700 Platform** Global Series Tractors (Does Not Include 3rd Function Wiring Harness)	20C826		972.00
	72533940M	2 Function Mechanical Hydraulic Kit, 8 Pin Deutsch, with Joystick for **MF4700 Cab** Global Series Tractors (Includes 3rd Function Wiring Harness)	90C997		1,174.00
Note: 72537058 Harness Adapter Required for Field Installation of 8 Pin Loader onto a 12 Pin Tractor 72537057 Harness Adapter Required for Field Installation of 12 Pin Loader onto an 8 Pin Tractor (Please Reference Bulletin # MF21-09PMB for Further Details)					
	72537058M	Harness Conversion Kit For 12 Pin Tractor Harness Equipped with 8 Pin Loader			No Charge
	72537057M	Harness Conversion Kit For 8 Pin Tractor Harness Equipped with 12 Pin Loader			No Charge
3RD FUNCTION OPTIONS					**Group 04**
	72533279M	Third Function Electric Diverter Valve for Dealer Installed Loader Hydraulics or Loader Ready Tractors (Does not require Live 3rd Function Hose Kit)	12C659		856.00
	72533885M	Third Function Wiring Harness, 8 Pin Deutsch Connector, and Button Insert Kit for **MF4700 Platform** Global Series Tractors (Required for 3rd Function and Electric Soft Drive)	15C203		239.00
HYDRAULIC OPTIONS					**Group 05**
	72533343M	4 Coupler Quick Release Single Lever for Loader Ready Factory Installed 2 Function Hydraulic Set (for use on Loader Provisioned MF4700 Series with Factory Installed 2 Function Hydraulic Set or for Dealer Installed 72533882M and 72533940M for MF4700 Series)	28C511		664.00
	72537066M	Q-Companion - Dealer Retrofit Kit Complete Field Installed Kit for 12 Pin Loader	69C1999		$2,597.00
Loader Provisioned Tractors					
	72533944M	Hose Extension Kit for **MF4700 Platform** Global Series Tractors (Required for Platform Tractors Equipped with LL001 Factory Installed Subframe and Hydraulic Set, less Loader from Factory)	85C068		81.00

Order Code	Catalog Number	Description	Factory Code	Approx. Weight (lb.)	List Price
ADDITIONAL HYDRAULIC OPTIONS					**Group 06**
		Compatible with Factory and Dealer Installed Hydraulic Service Sets			
	ACX2630550M	Hydraulic Implement Locking Set - Q Lock Compatible with Euro Loader Only (Requires 3rd Function to Operate)	17C478		621.00
	72533296M	Hydraulic Implement Locking Electrical Switch Kit Compatible with Euro Loader Only (Required with ACX2630550M)	36C052		68.00
	72533289M	Loader Light Kit.	54C463		602.00
	72533290M	Switch Kit for Loader Light (Required for 72533289M when no Q-Companion is Present)	61C071		93.00
	72533515M	Q-Companion Dealer Installed Complete Kit - Bluetooth	90C2286		2,970.00
	72533297M	Selecto Fix Loader Part Flat Face Quick Release System for Hydraulic Implements (Requires 3rd Function)	21C441		573.00
	72533577M	Selecto Fix Implement Part. Flat Face Quick Release System for Hydraulic Implements One Required with each Hydraulic Implement (Required with Selecto Fix Loader Part)	02C251		326.00
BUCKETS - OPTIONAL					**Group 07**
		Euro Style			
	72537003M	83-inch Heavy Duty Material Bucket - SM 210	75C981		1,155.00
	72537005M	73-inch Material Bucket - GM 185	90C977		1,270.00
	72537006M	83-inch Material Bucket- GM 215	79C1098		1,427.00
	72537008M	70-inch Heavy Duty Material Bucket - SM+ 180	03C1185		1,539.00
	72537014M	78-inch Heavy Duty Material Bucket - SM+ 200	85C1312		1,705.00
	72537019M	86-inch Heavy Duty Material Bucket - SM+ 220	42C1344		1,746.00
	72537033M	80-inch Light Material High Volume Bucket - VL 205.	39C1237		1,607.00
	72537034M	88-inch Light Material High Volume Bucket - VL 225.	39C1545		2,007.00
		Skid Steer Style			
	72537004M	83-inch Heavy Duty Material Bucket - SM 210	15C968		1,139.00
ATTACHMENTS - OPTIONAL					**Group 08**
	72533990M	Round Bale Spike	69C536	132	697.00
	72556285M	Big Bale Fork with Extension	85C773	273	1,005.00
	72556284M	48-inch Pallet Fork - 5,500 lbs (2,500 kg) Capacity	64C948	375	1,232.00
		Requires Third Function			
	72556264M	63-inch FlexiGrip 160 with Extension (for Round Bales)	27C2195	610	2,851.00
	72556058M	92-inch QuadroGrip 200 (for Round or Square Bales)	48C3637	916	4,724.00

Order Code	Catalog Number	Description	Factory Code	Approx. Weight (lb.)	List Price
ACCESSORIES - OPTIONAL					**Group 09**
		For 72537008M - 70-inch Euro Style HD Material Bucket - SM+ 180			
	72537009M	SM+ 180 Bolt On Tooth Set (Qty 6)	58C195		254.00
	72537010M	SM+ 180 Bolt On Hardened Edge	14C294		382.00
	72537011M	SM+ 180 Bolt On Plastic Edge	40C400		520.00
	72537012M	SM+ 180 Bolt On Serrated Edge	84C301		392.00
	72537013M	SM+ Bolt On Spill Guard	09C090		117.00
		For 725370014M - 78-inch Euro Style HD Material Bucket - SM+ 200			
	72537015M	SM+ 200 Bolt On Tooth Set (Qty 7)	69C228		297.00
	72537016M	SM+ 200 Bolt On Hardened Edge	48C326		424.00
	72537017M	SM+ 200 Bolt On Plastic Edge	91C448		583.00
	72537018M	SM+ 200 Bolt On Serrated Edge	65C342		445.00
	72537013M	SM+ Bolt On Spill Guard	09C090		117.00
		For 725370019M - 86-inch Euro Style HD Material Bucket - SM+ 220			
	72537015M	SM+ 200 Bolt On Tooth Set (Qty 7)	69C228		297.00
	72537020M	SM+ 220 Bolt On Hardened Edge	59C359		467.00
	72537021M	SM+ 220 Bolt On Plastic Edge	19C498		647.00
	72537022M	SM+ 220 Bolt On Serrated Edge	29C367		477.00
	72537013M	SM+ Bolt On Spill Guard	09C090		117.00
	72533693M	Log Grab (Requires 48-inch Pallet Fork) (Requires 3rd Function)	68C1450	187	1,884.00
	72533694M	Hydraulic Fork Shift Kit for 48-inch Pallet Forks (Requires 3rd Function)	56C945	165	1,228.00
	72556070M	Weld-On Hook Set - (to Adapt Attachments)	72C181	30	236.00
	72556069M	Counterweight - 3-Point Hitch (Empty)	43C815	276	1,059.00

MF941X / MF946X LOADERS

NON SELF-LEVELING / MECHANICAL SELF-LEVELING

MASSEY FERGUSON®

(F.O.B. SIMPSONVILLE, SC)

FEATURES

- One Piece Main Frame with Tapered Arms and Single Cross Member
- Quick Attach Loader Frame Mount with Pin Lock and Built in Parking Stands
- Quick Attach Implement Mounting with Euro Style Single Lever Locking System
- 75 mm Double Acting Lift Cylinders **(MF941X)**
- 70 mm Double Acting Lift Cylinders **(MF946X)**
- 75 mm Double Acting Bucket Cylinders **(MF941X)**
- 75 mm Double Acting Bucket Cylinders, Equal Displacement **(MF946X)**
- Hydraulic Lines Routed Inside Main Frame for Protection and Visibility
- Pivots have Recessed Greasable Galvanized Steel Pins with Bushings at Key Points
- 4-Flat Face Hydraulic Tips on Boom and Bucket Circuits
- Protective Hose Sheath
- Compatible with MF5700/D and MF6700 Global Series Tractors
- Powder Painted with Corrosion Protection
- Bucket Level Indicator
- Maximum Lift Height 148" (3.75 m) at Pivot Pin
- **MF941X**: 2220 lb. (1007 kg) Lift Capacity to Full Height, 31.5",(800 mm) Forward of Pivot Pin per ASABE 301.3 @ 2828 PSI
- **MF946X**: 3500 lb. (1588 kg) Lift Capacity to Full Height, 31.5", (800 mm) Forward of Pivot Pin per ASABE 301.3 @ 2828 PSI
- Maximum Roll Back Angle: 42 Degrees
- Maximum Dump Angle: 49 Degrees
- Grille Guard Standard

NOTE: TRACTORS MUST BE PROPERLY BALLASTED FOR LOADER OPERATION. SEE OPERATOR'S MANUAL

NOTE: SPECIFICATIONS MAY VARY BETWEEN MODELS, TIRE EQUIPMENT AND HYDRAULIC OPTIONS

FOR MORE INFORMATION ON DEALER INSTALLED LOADER OPTIONS SEE PAGE 70

Order Code	Catalog Number	Description	Factory Code	Approx. Weight (lb.)	List Price
BASE MACHINE - REQUIRED					**Group 01**
XL41N1D AA00M	72533899	MF941X Base Loader, Non Self-Leveling	04C4583	1135	5,952.00
XL46P1D 8A00MM	72533892	MF946X Base Loader, Mechanical Self-Leveling	44C5445	1290	7,072.00
		Loader Ready Tractors Include the Factory Installed Loader Subframe Mounting Kit and Loader Joystick and Valve for the MF900X Series Loader. Order the Base Loader Above and Options and Attachments to Complete the Loader.			
DEALER INSTALLED SUBFRAME MOUNTING KITS					**Group 02**
	72533941M	Subframe Kit for MF5700 Global Series Tractors . . . . . Includes Grille Guard	91C2065		2,683.00
	72537000M	Subframe Kit for MF5700D Global Series Tractors. . . . . Includes Grille Guard	91C2065		2,683.00
	72533895M	Subframe Kit for MF6700 Global Series Tractors . . . . . Includes Grille Guard	91C2065		2,683.00

Order Code	Catalog Number	Description	Factory Code	Approx. Weight (lb.)	List Price
DEALER INSTALLED 2 FUNCTION OPTIONS					**Group 03**
Non Loader Provisioned Tractors					
	72533942M	2 Function Mechanical Hydraulic Kit with Joystick and Valve for **MF5700 and MF6700** Global Series **Platform** (Does Not Include 3rd Function Wiring Harness)	19C1345		1,747.00
	72533943M	2 Function Mechanical Hydraulic Kit, 8 Pin Deutsch, with Joystick and Valve for **MF5700 and MF6700** Global Series **Cab** (Includes 3rd Function Wiring Harness)	10C1409		1,830.00
	72537001M	2 Function Mechanical Hydraulic Kit, 8 Pin Deutsch, with Joystick and Valve for **MF5700D** Global Series **Cab** (Includes 3rd Function Wiring Harness)	10C1409		1,830.00
3RD FUNCTION OPTIONS					**Group 04**
	72533927M	Third Function Valve with 8 Pin Deutsch Connector (Platform requires Wiring Harness below)	10C753	20	886.00
	72533885M	Third Function Wiring Harness, 8 Pin Deutsch Connector, and Button Insert Kit for **MF5700 and MF6700 Platform** Global Series Tractors (Required for 3rd Function)	15C203		239.00
	72537056M	Third Function Valve with 12 Pin Deutsch Connector (Requires Wiring Harness)	10C753	20	886.00
Note: 72537058 Harness Adapter Required for Field Installation of 8 Pin Loader onto a 12 Pin Tractor 72537057 Harness Adapter Required for Field Installation of 12 Pin Loader onto an 8 Pin Tractor (Please Reference Bulletin # MF21-09PMB for Further Details)					
	72537058M	Harness Conversion Kit For 12 Pin Tractor Harness Equipped with 8 Pin Loader			No Charge
	72537057M	Harness Conversion Kit For 8 Pin Tractor Harness Equipped with 12 Pin Loader			No Charge
HYDRAULIC OPTIONS					**Group 05**
	72533343M	4 Coupler Quick Release Single Lever for Loader Ready Factory Installed 2 Function Hydraulic Set for use on Loader Provisioned MF5700 and MF6700 Global Series with Factory Installed 2 Function Hydraulic Set or for Dealer Installed 72533942M and 72533943)	28C511		664.00
	72533671M	Soft Drive Ride Control System	60C506	10	596.00
Loader Provisioned Tractors					
	72533944M	Hose Extension Kit for MF5700 and MF6700 Global Series (Required for Platform Tractors Equipped with LL001 Factory Installed Subframe and Hydraulic Set, less Loader from Factory)	85C068		81.00

Order Code	Catalog Number	Description	Factory Code	Approx. Weight (lb.)	List Price
BUCKETS - OPTIONAL					**Group 06**
		Euro Style			
	72537003M	83-inch Heavy Duty Material Bucket - SM 210	75C981		1,155.00
	72537006M	83-inch Material Bucket- GM 215	79C1098		1,427.00
	72537007M	95-inch Material Bucket- GM 245	25C1482		1,925.00
ATTACHMENTS - OPTIONAL					**Group 07**
		Euro Style			
	72533990M	Round Bale Spike	69C536	144	697.00
	72556285M	Big Bale Fork with Extension	85C773	271	1,005.00
	72556283M	48-inch Pallet Fork - 3,520 lbs (1,600 kg) Capacity	50C808	403	1,050.00
	72533693M	Log Grab (Requires 48-inch Pallet Fork) (Requires 3rd Function)	68C1450	187	1,884.00
ACCESSORIES - OPTIONAL					**Group 08**
	72556121M	Bolt-On Utility Grapple (Only Compatible with SM Buckets, Bucket Requires Drilling)	45C1935	440	2,277.00
	72556070M	Weld-On Hook Set - (to Adapt Attachments)	72C181	30	236.00
	72556069M	Counterweight - 3-Point Hitch (Empty)	43C815	276	1,059.00

MASSEY FERGUSON®

RESERVED

MFFL.3723 / MFFL.3819 LOADERS

NON SELF-LEVELING / MECHANICAL SELF-LEVELING

(F.O.B. Telford, TN with Distribution Center in Alliston, Ontario)

MASSEY FERGUSON®

FEATURES

- One Piece 5 mm High Tensile Main Frame with Tapered and Embossed Arms
- Quick Attach Implement Mounting with Euro Style Single Lever Locking System
- 80 mm Arm Profile
- 80 mm Double Acting Lift Cylinders **(FL.3723)**
- 75 mm Double Acting Lift Cylinders **(FL.3819)**
- 80 mm Double Acting Bucket Cylinders **(FL.3723)**
- 80 mm Double Acting, Equal Displacement Bucket Cylinders **(FL.3819)**
- Industrial Grade Hydraulic Fittings and Twin Braided Hoses, Incorporated Internally Inside Loader Boom
- Central Valve, Equalized Oil Distribution Valve with Incorporated Relief Valves
- 4-Flat Face Hydraulic Tips on Boom and Bucket Circuits
- Protective Hose Cover
- Powder Painted with Corrosion Protection
- Bucket Level Indicator
- Compatible with MF5700S/SL Series, MF5700/D and, MF6700 Global Series Tractors
- Lock and Go Loader / Subframe Connection System
- Pivots Are Greasable and Include Industrial Grade Pins and Bushings
- Front Bumper Guard (with Subframe Set)
- Buckets Have Heavy Duty, Welded-On Cutting Edge, Box Beam Section for Stiffness and Torsional Rigidity and Lateral Reinforcing Bars
- 149" (3.79 m) Lift Height to Pivot Pin
- **FL.3723**: 2840 lb. (1288 kg) Lift Capacity to Full Height, 31.5",(800 mm) Forward of Pivot Pin per ASABE 301.3 @ 2828 PSI
- **FL.3819**: 4230 lb. (1919 kg) Lift Capacity to Full Height, 31.5", (800 mm) Forward of Pivot Pin per ASABE 301.3 @ 2828 PSI
- Maximum Roll Back Angle: 58 Degrees
- Maximum Dump Angle: 60 Degrees

NOTE: TRACTORS MUST BE PROPERLY BALLASTED FOR LOADER OPERATION. SEE OPERATOR'S MANUAL

NOTE: SPECIFICATIONS MAY VARY BETWEEN MODELS, TIRE EQUIPMENT AND HYDRAULIC OPTIONS

IMPORTANT NOTE: DEALER INSTALLED LCS JOYSTICK IS VERY DIFFERENT FROM THE FACTORY INSTALLED LOADER JOYSTICK (WITH MULTI-FUNCTION ON MF5700SL), AND WILL HAVE LIMITED CAPABILITIES COMPARABLY.

FOR MORE INFORMATION ON DEALER INSTALLED LOADER OPTIONS SEE PAGE 70

Order Code	Catalog Number	Description	Factory Code	Approx. Weight (lb.)	List Price
BASE MACHINE - REQUIRED					**Group 01**
MF FL.3723	72537042	MFFL.3723 Base Loader, Non Self-Leveling with 4 Flat Face 3/8-inch Couplers and 12 Pin Connector, Includes Soft Drive with Electric Shutoff	64C5568	1140	7,232.00
MF FL.3819	72537047	MFFL.3819 Base Loader, Mechanical Self-Leveling with 4 Flat Face 3/8-inch Couplers and 12 Pin Connector, Includes Soft Drive with Electric Shutoff	99C7150	1270	9,287.00
		Loader Ready or Loader Provisioned Tractors Include the Factory Installed Loader Subframe Mounting Kit and Loader Joystick for this Series Loader. Order the Base Loader Above (with Hose Extension Kit for Platform) and Buckets or Attachments to Complete the Loader.			
DEALER INSTALLED SUBFRAME MOUNTING KITS					**Group 02**
	72533919M	Subframe Kit for MF5700S/SL Series Tractors. Only Compatible without Front 3-Point Hitch	34C2496		3,242.00
	72533941M	Subframe Kit for MF5700 Global Series Tractors Includes Grille Guard	91C2065		2,683.00
	72537000M	Subframe Kit for MF5700D Dyna-4 Global Series Tractors Includes Grille Guard	91C2065		2,683.00
	72533895M	Subframe Kit for MF6700 Global Series Tractors Includes Grille Guard	91C2065		2,683.00

Order Code	Catalog Number	Description	Factory Code	Approx. Weight (lb.)	List Price
DEALER INSTALLED 2 FUNCTION OPTIONS					**Group 03**
	72533195M	2 Function Mechanical Hydraulic Set, **Open Center** . . . . . Includes Multifunction Mechanical Joystick for MF5700S Only Classic Editions	08C1543		2,004.00
	72533196M	2 Function Mechanical Hydraulic Set, **Closed Center** Load . . Sensing, Includes Multifunction Mechanical Joystick for MF5700S Only Classic Editions	08C1543		2,004.00
	72533971M	2 Function Mechanical Hydraulic Set, **Open Center** . . . . . Includes Multifunction Mechanical Joystick for MF5700SL Classic Editions	05C1513		1,965.00
	72533972M	2 Function Mechanical Hydraulic Set, **Closed Center** Load . . Sensing, Includes Multifunction Mechanical Joystick for MF5700SL Classic Editions	05C1513		1,965.00
	72533721M	2 Function **LCS** Mechanical Cable Controlled Joystick, ... **Open Center**, for 5711S/SL, 5712S/SL, 5713S/SL Classic Editions	50C1116		1,450.00
	72533723M	2 Function **LCS** Mechanical Cable Controlled Joystick, ... **Closed Center** Load Sensing, for 5711S/SL, 5712S/SL, 5713S/SL Classic Editions	50C1116		1,450.00
	72533725M	2 Function **LCS** Electric Controlled Joystick, ... **Open Center**, for 5711S/SL, 5712S/SL, 5713S/SL Deluxe Editions	73C2578		3,349.00
	72533727M	2 Function **LCS** Electric Controlled Joystick, ... **Closed Center** Load Sensing, for 5711S/SL, 5712S/SL, 5713S/SL Deluxe Editions	73C2578		3,349.00
	72533942M	2 Function Mechanical Hydraulic Kit with Joystick . . . . . and Valve for **MF5700 and MF6700 Platform** Global Series (Does Not Include 3rd Function and Electric Soft Drive Wiring Harness)	19C1345		1,747.00
	72533943M	2 Function Mechanical Hydraulic Kit, 8 Pin Deutsch, ... with Joystick and Valve for **MF5700 and MF6700** Global Series **Cab** Tractors (Includes 3rd Function and Electric Soft Drive Wiring Harness)	10C1409		1,830.00
	72537001M	2 Function Mechanical Hydraulic Kit, 8 Pin Deutsch, ... with Joystick and Valve for **MF5700D** Global Series **Cab** (Includes 3rd Function Wiring Harness)	10C1409		1,830.00
	72533549M	Standard Hose Set (No Joystick, Uses Tractor Remotes) . . .	72C412		536.00

Note: 72537058 Harness Adapter Required for Field Installation of 8 Pin Loader onto a 12 Pin Tractor
72537057 Harness Adapter Required for Field Installation of 12 Pin Loader onto an 8 Pin Tractor
(Please Reference Bulletin # MF21-09PMB for Further Details)

72537058M	Harness Conversion Kit . . . . . For 12 Pin Tractor Harness Equipped with 8 Pin Loader		No Charge
72537057M	Harness Conversion Kit . . . . . For 8 Pin Tractor Harness Equipped with 12 Pin Loader		No Charge

Order Code	Catalog Number	Description	Factory Code	Approx. Weight (lb.)	List Price
3RD FUNCTION OPTIONS					**Group 04**
	72533279M	Third Function Electric Diverter Valve for Dealer Installed Loader Hydraulics or Loader Ready Tractors (Does not require Live 3rd Function Hose Kit)	12C659		856.00
	72533622M	Live 3rd Function for use with Dealer Installed 2 Function **LCS** Mechanical Cable Controlled Joystick (Requires 72533721 or 72533723) (Requires Live 3rd Function Hose Kit for Loader Boom)	46C768		998.00
	72533621M	Live 3rd Function for use with Dealer Installed 2 Function **LCS** Electric Controlled Joystick (Requires 72533725 or 72533727) (Requires Live 3rd Function Hose Kit for Loader Boom)	46C768		998.00
	72533281M	Live 3rd Function Hose Kit for use with 72533622M or 72533621M for Loader Boom with Flat Face Couplers	41C256		333.00
	72533885M	Third Function Wiring Harness, 8 Pin Deutsch Connector, and Button Insert Kit for **MF5700 and MF6700 Platform** Global Series Tractors (Required for 3rd Function and Electric Soft Drive)	15C203		239.00
HYDRAULIC OPTIONS					**Group 05**
		Only Compatible with Factory Installed Loader Ready Hydraulic Service Sets			
	72533343M	4 Coupler Quick Release Single Lever for Loader Ready Factory Installed 2 Function Hydraulic Set or Dealer Installed 72533971M or 72533972M	28C511		664.00
	72537066M	Q-Companion - Dealer Retrofit Kit Complete Field Installed Kit for 12 Pin Loader	69C1999		$2,597.00
		Loader Provisioned Tractors			
	72533944M	Hose Extension Kit for MF5700 andMF6700 Global Series (Required for Platform Tractors Equipped with LL001 Factory Installed Subframe and Hydraulic Set, less Loader from Factory)	85C068		81.00
		Compatible with Dealer Installed LCS Hydraulic Service Sets			
	72533573M	MC4 Multicoupler, 4 Coupler Quick Release for Dealer Installed LCS Hydraulic Sets	11C495		643.00
	72533575M	MC2 Multicoupler, 2 Coupler Quick Release for LCS Live 3rd Hydraulic Sets (Requires MC4 Multicoupler)	19C421		547.00

Order Code	Catalog Number	Description	Factory Code	Approx. Weight (lb.)	List Price
ADDITIONAL HYDRAULIC OPTIONS					**Group 06**
		Compatible with Factory and Dealer Installed Hydraulic Service Sets			
	ACX2630550M	Hydraulic Implement Locking Set - Q Lock (Requires 3rd Function to Operate)	17C478		621.00
	72533296M	Hydraulic Implement Locking Electrical Switch Kit (Required with ACX2630550M)	36C052		68.00
	72533289M	Loader Light Kit.	54C463		602.00
	72533290M	Switch Kit for Loader Light (Required for 72533289M when no Q-Companion is Present)	61C071		93.00
	72533515M	Q-Companion Dealer Installed Complete Kit - Bluetooth	90C2286		2,970.00
	72533297M	Selecto Fix Loader Part Flat Face Quick Release System for Hydraulic Implements (Requires 3rd Function)	21C441		573.00
	72533577M	Selecto Fix Implement Part. Flat Face Quick Release System for Hydraulic Implements One Required with each Hydraulic Implement (Required with Selecto Fix Loader Part)	02C251		326.00
BUCKETS - OPTIONAL					**Group 07**
	72537005M	73-inch Material Bucket - GM 185	90C977		1,270.00
	72537006M	83-inch Material Bucket- GM 215	79C1098		1,427.00
	72537007M	95-inch Material Bucket- GM 245	25C1482		1,925.00
	72537008M	70-inch Heavy Duty Material Bucket - SM+ 180	03C1185		1,539.00
	72537014M	78-inch Heavy Duty Material Bucket - SM+ 200	85C1312		1,705.00
	72537019M	86-inch Heavy Duty Material Bucket - SM+ 220	42C1344		1,746.00
	72537023M	94-inch Heavy Duty Material Bucket - SM+ 240	63C1862		2,419.00
	72537033M	80-inch Light Material High Volume Bucket - VL 205.	39C1237		1,607.00
	72537034M	88-inch Light Material High Volume Bucket - VL 225.	39C1545		2,007.00

Order Code	Catalog Number	Description	Factory Code	Approx. Weight (lb.)	List Price
ATTACHMENTS - OPTIONAL					**Group 08**
	72533990M	Round Bale Spike	69C536	132	697.00
	72556285M	Big Bale Fork with Extension	85C773	273	1,005.00
	72556108M	83-inch Maxi-Grapple -210T (Tine Bucket)	77C4466	1367	5,801.00
	72556111M	83-inch Maxi-Grapple -210 (Standard Bucket)	03C4342	1334	5,639.00
	72556284M	48-inch Pallet Fork - 5,500 lbs (2,500 kg) Capacity	64C948	375	1,232.00
	72556264M	63-inch FlexiGrip 160 with Extension (for Round Bales) (Requires 3rd Function)	27C2195	610	2,851.00
	72556265M	79-inch FlexiGrip 200 (for Round Bales) (Requires 3rd Function)	61C2381	686	3,093.00
	72556058M	92-inch QuadroGrip 200 (for Round or Square Bales) (Requires 3rd Function)	48C3637	916	4,724.00
	72533693M	Log Grab (Requires 48-inch Pallet Fork) (Requires 3rd Function)	68C1450	187	1,884.00
	72533694M	Hydraulic Fork Shift Kit for 48-inch Pallet Forks (Requires 3rd Function)	56C945	165	1,228.00
ACCESSORIES - OPTIONAL					**Group 09**
		For 72537008M - 70-inch Euro Style HD Material Bucket - SM+ 180			
	72537009M	SM+ 180 Bolt On Tooth Set (Qty 6)	58C195		254.00
	72537010M	SM+ 180 Bolt On Hardened Edge	14C294		382.00
	72537011M	SM+ 180 Bolt On Plastic Edge	40C400		520.00
	72537012M	SM+ 180 Bolt On Serrated Edge	84C301		392.00
	72537013M	SM+ Bolt On Spill Guard	09C090		117.00
		For 725370014M - 78-inch Euro Style HD Material Bucket - SM+ 200			
	72537015M	SM+ 200 Bolt On Tooth Set (Qty 7)	69C228		297.00
	72537016M	SM+ 200 Bolt On Hardened Edge	48C326		424.00
	72537017M	SM+ 200 Bolt On Plastic Edge	91C448		583.00
	72537018M	SM+ 200 Bolt On Serrated Edge	65C342		445.00
	72537013M	SM+ Bolt On Spill Guard	09C090		117.00
		For 725370019M - 86-inch Euro Style HD Material Bucket - SM+ 220			
	72537015M	SM+ 200 Bolt On Tooth Set (Qty 7)	69C228		297.00
	72537020M	SM+ 220 Bolt On Hardened Edge	59C359		467.00
	72537021M	SM+ 220 Bolt On Plastic Edge	19C498		647.00
	72537022M	SM+ 220 Bolt On Serrated Edge	29C367		477.00
	72537013M	SM+ Bolt On Spill Guard	09C090		117.00
		For 725370023M - 94-inch Euro Style HD Material Bucket - SM+ 240			
	72537024M	SM+ 240 Bolt On Tooth Set (Qty 8)	03C261		339.00
	72537025M	SM+ 240 Bolt On Hardened Edge	93C391		509.00
	72537026M	SM+ 240 Bolt On Plastic Edge	70C546		710.00
	72537027M	SM+ 240 Bolt On Serrated Edge	48C403		524.00
	72537013M	SM+ Bolt On Spill Guard	09C090		117.00
	72556105M	Back Screen For Radius Arm Grapple (Steel with Cutout Design)	57C262		341.00
	72556070M	Weld-On Hook Set - (to Adapt Attachments)	72C181	30	236.00
	72556069M	Counterweight - 3-Point Hitch (Empty)	43C815	276	1,059.00

MASSEY FERGUSON®

RESERVED

MFFL.4125 / MFFL.4124 LOADERS

NON SELF-LEVELING / MECHANICAL SELF-LEVELING

(F.O.B. Telford, TN with Distribution Center in Alliston, Ontario)

MASSEY FERGUSON®

FEATURES

- One Piece 6 mm High Tensile Main Frame with Tapered and Embossed Arms
- Quick Attach Implement Mounting with Euro Style Single Lever Locking System
- 82 mm Arm Profile
- 85 mm Double Acting Lift Cylinders **(FL.4125)**
- 85 mm Double Acting Lift Cylinders **(FL.4124)**
- 80 mm Double Acting Bucket Cylinders **(FL.4125)**
- 90 mm Double Acting, Equal Displacement Bucket Cylinders **(FL.4124)**
- Industrial Grade Hydraulic Fittings and Twin Braided Hoses, Incorporated Internally Inside Loader Boom
- Central Valve, Equalized Oil Distribution Valve with Incorporated Relief Valves
- Protective Hose Cover
- Front Bumper Guard (with Subframe Set)
- Powder Painted with Corrosion Protection
- Bucket Level Indicatorr
- Compatible with MF6700S Series Tractors
- Lock and Go Loader / Subframe Connection System
- Pivots are Greasable and Include Industrial Grade Pins and Bushings
- Buckets Have Heavy Duty, Welded-On Cutting Edge, Box Beam Section for Stiffness and Torsional Rigidity and Lateral Reinforcing Bars
- 157" (4.0 m) Lift Height to Pivot Pin
- **FL.4125**: 2870 lb. (1302 kg) Lift Capacity to Full Height, 31.5" (800 mm) Forward of Pivot Pin per ASABE 301.3 @ 2828 PSI
- **FL.4124**: 5070 lb. (2230 kg) Lift Capacity to Full Height, 31.5" (800 mm) Forward of Pivot Pin per ASABE 301.3 @ 2828 PSI
- **FL.4125:**
  Maximum Roll Back Angle: 46 Degrees
  Maximum Dump Angle: 56 Degrees
- **FL.4124:**
  Maximum Roll Back Angle: 48 Degrees
  Maximum Dump Angle: 56 Degrees

NOTE: TRACTORS MUST BE PROPERLY BALLASTED FOR LOADER OPERATION. SEE OPERATOR'S MANUAL

NOTE: SPECIFICATIONS MAY VARY BETWEEN MODELS, TIRE EQUIPMENT AND HYDRAULIC OPTIONS

IMPORTANT NOTE: DEALER INSTALLED LCS JOYSTICK IS VERY DIFFERENT FROM THE FACTORY INSTALLED MULTI-FUNCTION LOADER JOYSTICK, AND WILL HAVE LIMITED CAPABILITIES COMPARABLY.

NOTE: FRONT FENDERS POSITIONED AT NARROW TREAD SETTINGS MAY INTERFERE WITH THE LOADER LIFT CYLINDERS

FOR MORE INFORMATION ON DEALER INSTALLED LOADER OPTIONS SEE PAGE 72

Order Code	Catalog Number	Description	Factory Code	Approx. Weight (lb.)	List Price
BASE MACHINE - REQUIRED					**Group 01**
MF FL.4125	72533175	MFFL.4125 Base Loader, Non Self-Leveling Includes Soft Drive with Electric Shutoff	04C5969	1230	7,752.00
MF FL.4124	72533161	MFFL.4124 Base Loader, Mechanical Self-Leveling Includes Soft Drive with Electric Shutoff	46C7775	1370	10,098.00
MF FL.4124	72533245	MFFL.4124 Base Loader, Mechanical Self-Leveling Includes Soft Drive with Electric Shutoff, Live 3rd Hoses Selecto Fix, Q-Companion Luxury Package **SPECIAL ORDER 12 WEEK LEAD TIME**	78C10405	TBD	13,514.00
		Not compatible with Monoblock Weight (YB003) **Loader Ready Tractors Include the Factory Installed Loader Subframe Mounting Kit and Loader Joystick for this Series Loader.** **Order the Base Loader Above, Options and Attachments to Complete the Loader.**			
DEALER INSTALLED SUBFRAME MOUNTING KITS					**Group 02**
Choose One	72533962M	Subframe Kit for MF6715S, 6716S, 6718S Dyna-4 or Dyna-6, Classic, Deluxe or Premium Editions (Tractors without Front Hitch)	34C2496		3,242.00
	72533963M	Subframe Kit for MF6714S, 6715S, 6716S, 6718S Dyna-VT, Deluxe or Premium Editions (Tractors without Front Hitch)	34C2496		3,242.00

Order Code	Catalog Number	Description	Factory Code	Approx. Weight (lb.)	List Price
DEALER INSTALLED 2 FUNCTION OPTIONS					**Group 03**
	72533197M	2 Function Mechanical Hydraulic Set, **Open Center** Includes Multifunction Mechanical Joystick for MF6715S, 6716S, 6718S Classic Editions **After Serial # H353033**	08C1543		2,004.00
	72533198M	2 Function Mechanical Hydraulic Set, **Closed Center** Load Sensing, Includes Multifunction Mechanical Joystick for MF6715S, 6716S, 6718S Classic Editions **After Serial # H353033**	08C1543		2,004.00
	72533975M	2 Function Mechanical Hydraulic Set, **Open Center** Includes Multifunction Mechanical Joystick for MF6715S, 6716S, 6718S Classic Editions (prior to Serial # H353033)	05C1513		1,965.00
	72533976M	2 Function Mechanical Hydraulic Set, **Closed Center** Load Sensing, Includes Multifunction Mechanical Joystick for MF6715S, 6716S, 6718S Classic Editions (prior to Serial # H353033)	05C1513		1,965.00
	72533601M	2 Function **LCS** Mechanical Cable Controlled Joystick, **Open Center**, for MF6715S, 6716S, 6718S, Dyna-4 or Dyna-6, Classic Editions	50C1116		1,450.00
	◆72533888M	2 Function **LCS** Mechanical Cable Controlled Joystick, **Closed Center** Load Sensing, for MF6715S, 6716S, 6718S, Dyna-4 or Dyna-6, Classic Editions	50C1116		1,450.00
	72533950M	2 Function **LCS** Electric Controlled Joystick, **Closed Center** Load Sensing, for MF6715S, 6716S, 6718S, Dyna-6, Deluxe or Premium Editions	73C2578		3,349.00
	72533890M	2 Function **LCS** Electric Controlled Joystick, **Closed Center** Load Sensing, for MF6714S, 6715S, 6716S, 6718S, Dyna-VT, Deluxe or Premium Editions (Requires Power Beyond)	73C2578		3,349.00
	72533549M	Standard 2 Function Hose Set (No Joystick, Uses Tractor Remotes)	72C412		536.00

◆ **Requires 4313756M91 and 3796801M1 from AGCO Parts to complete hydraulic connection only for Dyna-4 or Dyna-6 with Closed Center Load Sensing**

3RD FUNCTION OPTIONS					**Group 04**
	72533279M	Third Function Electric Diverter Valve for Dealer Installed Loader Hydraulics or Loader Ready Tractors (Does not require Live 3rd Function Hose Kit)	12C659		856.00
	72533622M	Live 3rd Function for use with Dealer Installed 2 Function **LCS** Mechanical Cable Controlled Joystick (Requires Live 3rd Function Hose Kit for Loader Boom)	46C768		998.00
	72533621M	Live 3rd Function for use with Dealer Installed 2 Function **LCS** Electric Controlled Joystick (Requires Live 3rd Function Hose Kit for Loader Boom)	46C768		998.00
	72533979M	Live 3rd Function for 2 Function Cable Operated Multifunction Mechanical Joystick - Field or Factory Installed for MF6700S Classic, **Closed Center** Load Sensing (Requires Live 3rd Function Hose Kit for Loader Boom) (Not Rated for Tractors that Exceed 29 GPM High Flow)	15C1459		1,895.00
	72533282M	Live 3rd Function Hose Kit for Loader Boom with Flat Face Couplers required with 72533622M, 72533621M and 72533979M or to Complete the Factory Installed Live 3rd Loader Provision (LL005)	41C256		333.00

Order Code	Catalog Number	Description	Factory Code	Approx. Weight (lb.)	List Price
HYDRAULIC OPTIONS					**Group 05**
		Only Compatible with Factory Installed Loader Ready Hydraulic Service Sets			
	72533343M	4 Coupler Quick Release Single Lever for Loader Ready Factory Installed 2 Function Hydraulic Set or Dealer Installed 72533975M or 72533976M	28C511		664.00
	72533344M	6 Coupler Quick Release Single Lever Compatible when adding a Dealer Installed Live 3rd 72533979M to Factory Installed 2 Function Cable Operated Valve or to Dealer Installed Multifunction Mechanical Joystick 72533976M	19C729		947.00
		Compatible with Dealer Installed LCS Hydraulic Service Sets			
	72533573M	MC4 Multicoupler, 4 Coupler Quick Release for Dealer Installed LCS Hydraulic Sets	11C495		643.00
	72533575M	MC2 Multicoupler, 2 Coupler Quick Release for LCS Live 3rd Hydraulic Sets (Requires MC4 Multicoupler)	19C421		547.00
ADDITIONAL HYDRAULIC OPTIONS					**Group 06**
		Compatible with Factory and Dealer Installed Hydraulic Service Sets			
	ACX2630550M	Hydraulic Implement Locking Set - Q Lock (Requires 3rd Function to Operate)	17C478		621.00
	72533296M	Hydraulic Implement Locking Electrical Switch Kit (Required with 7ACX2630550M on Classic Edition)	36C052		68.00
	72533289M	Loader Light Kit.	54C463		602.00
	72533290M	Switch Kit for Loader Light (Required for 72533289M when no Q-Companion is Present)	61C071		93.00
	72533515M	Q-Companion Dealer Installed Complete Kit - Bluetooth (Included in Luxury Package)	90C2286		2,970.00
	72533516M	Q-Companion Screen Set for Additional Tractor - Bluetooth	50C1347		1,750.00
	72533297M	Selecto Fix Loader Part Flat Face Quick Release System for Hydraulic Implements (Requires 3rd Function)	21C441		573.00
	72533577M	Selecto Fix Implement Part. Flat Face Quick Release System for Hydraulic Implements One Required with each Hydraulic Implement (Required with Selecto Fix Loader Part)	02C251		326.00
BUCKETS - OPTIONAL					**Group 07**
	72537005M	73-inch Material Bucket - GM 185	90C977		1,270.00
	72537006M	83-inch Material Bucket- GM 215	79C1098		1,427.00
	72537007M	95-inch Material Bucket- GM 245	25C1482		1,925.00
	72537008M	70-inch Heavy Duty Material Bucket - SM+ 180	03C1185		1,539.00
	72537014M	78-inch Heavy Duty Material Bucket - SM+ 200	85C1312		1,705.00
	72537019M	86-inch Heavy Duty Material Bucket - SM+ 220	42C1344		1,746.00
	72537023M	94-inch Heavy Duty Material Bucket - SM+ 240	63C1862		2,419.00
	72537035M	96-inch Light Material High Volume Bucket - VL 245	62C2083		2,706.00

MFFL.4125 / MFFL.4124 LOADERS

NON SELF-LEVELING / MECHANICAL SELF-LEVELING

Order Code	Catalog Number	Description	Factory Code	Approx. Weight (lb.)	List Price
ATTACHMENTS - OPTIONAL					**Group 08**
	72533990M	Round Bale Spike	69C536	132	697.00
	72556285M	Big Bale Fork with Extension	85C773	273	1,005.00
	72556108M	83-inch Maxi-Grapple -210T (Tine Bucket)	77C4466	1367	5,801.00
	72556109M	95-inch Maxi-Grapple -240T (Tine Bucket)	74C4744	1444	6,162.00
	72556111M	83-inch Maxi-Grapple -210 (Standard Bucket)	03C4342	1334	5,639.00
	72556112M	95-inch Maxi-Grapple -240 (Standard Bucket)	54C4621	1411	6,002.00
	72556284M	48-inch Pallet Fork - 5,500 lbs (2,500 kg) Capacity	64C948	375	1,232.00
	72556264M	63-inch FlexiGrip 160 with Extension (for Round Bales) (Requires 3rd Function)	27C2195	610	2,851.00
	72556265M	79-inch FlexiGrip 200 (for Round Bales) (Requires 3rd Funct)	61C2381	686	3,093.00
	72556058M	92-inch QuadroGrip 200 (for Round or Square Bales) (Requires 3rd Function)	48C3637	916	4,724.00
	72533693M	Log Grab (Requires 72556284M) (Requires 3rd Function)	68C1450	187	1,884.00
	72533694M	Hydraulic Fork Shift Kit for 48-inch Pallet Forks (Requires 3rd Function)	56C945	165	1,228.00
ACCESSORIES - OPTIONAL					**Group 09**
		For 72537008M - 70-inch Euro Style HD Material Bucket - SM+ 180			
	72537009M	SM+ 180 Bolt On Tooth Set (Qty 6)	58C195		254.00
	72537010M	SM+ 180 Bolt On Hardened Edge	14C294		382.00
	72537011M	SM+ 180 Bolt On Plastic Edge	40C400		520.00
	72537012M	SM+ 180 Bolt On Serrated Edge	84C301		392.00
	72537013M	SM+ Bolt On Spill Guard	09C090		117.00
		For 725370014M - 78-inch Euro Style HD Material Bucket - SM+ 200			
	72537015M	SM+ 200 Bolt On Tooth Set (Qty 7)	69C228		297.00
	72537016M	SM+ 200 Bolt On Hardened Edge	48C326		424.00
	72537017M	SM+ 200 Bolt On Plastic Edge	91C448		583.00
	72537018M	SM+ 200 Bolt On Serrated Edge	65C342		445.00
	72537013M	SM+ Bolt On Spill Guard	09C090		117.00
		For 725370019M - 86-inch Euro Style HD Material Bucket - SM+ 220			
	72537015M	SM+ 200 Bolt On Tooth Set (Qty 7)	69C228		297.00
	72537020M	SM+ 220 Bolt On Hardened Edge	59C359		467.00
	72537021M	SM+ 220 Bolt On Plastic Edge	19C498		647.00
	72537022M	SM+ 220 Bolt On Serrated Edge	29C367		477.00
	72537013M	SM+ Bolt On Spill Guard	09C090		117.00
		For 725370023M - 94-inch Euro Style HD Material Bucket - SM+ 240			
	72537024M	SM+ 240 Bolt On Tooth Set (Qty 8)	03C261		339.00
	72537025M	SM+ 240 Bolt On Hardened Edge	93C391		509.00
	72537026M	SM+ 240 Bolt On Plastic Edge	70C546		710.00
	72537027M	SM+ 240 Bolt On Serrated Edge	48C403		524.00
	72537013M	SM+ Bolt On Spill Guard	09C090		117.00
	72556105M	Back Screen For Radius Arm Grapple (Steel with Cutout Design)	57C262		341.00
	72556070M	Weld-On Hook Set - (to Adapt Attachments)	72C181	30	236.00
	72556069M	Counterweight - 3-Point Hitch (Empty)	43C815	276	1,059.00

MFFL.4227 / MFFL.4327 LOADERS

NON SELF-LEVELING / MECHANICAL SELF-LEVELING

(F.O.B. Telford, TN with Distribution Center in Alliston, Ontario)

MASSEY FERGUSON®

FEATURES

- One Piece 6 mm High Tensile Main Frame with Tapered and Embossed Arms
- Quick Attach Implement Mounting with Euro Style Single Lever Locking System
- 82 mm Arm Profile
- 90 mm Double Acting Lift Cylinders
- 85 mm Double Acting, Bucket Cylinders **(FL.4227)**
- 95 mm Double Acting, Equal Displacement Bucket Cylinders **(FL.4327)**
- Industrial Grade Hydraulic Fittings and Twin Braided Hoses, Incorporated Internally Inside Loader Boom
- Central Valve, Equalized Oil Distribution Valve with Incorporated Relief Valves
- Protective Hose Cover
- Front Bumper Guard (with Subframe Set)
- Powder Painted with Corrosion Protection
- Bucket Level Indicator
- Compatible with MF7714/S, 7715/S, 7716/S, and 7718/S Tractors
- Lock and Go Loader / Subframe Connection System
- Pivots are Greasable and Include Industrial Grade Pins and Bushings
- Buckets Have Heavy Duty, Welded-On Cutting Edge, Box Beam Section for Stiffness and Torsional Rigidity and Lateral Reinforcing Bars
- 167" (4.25 m) Lift Height to Pivot Pin
- **FL.4227**: 3510 lb. (1592 kg) Lift Capacity to Full Height, 31.5" (800 mm) Forward of Pivot Pin per ASABE 301.3 @ 2828 PSI
- **FL.4327**: 5450 lb. (2472 kg) Lift Capacity to Full Height, 31.5" (800 mm) Forward of Pivot Pin per ASABE 301.3 @ 2828 PSI
- Maximum Roll Back Angle: 48 Degrees
  Maximum Dump Angle: 57 Degrees

NOTE: TRACTORS MUST BE PROPERLY BALLASTED FOR LOADER OPERATION. SEE OPERATOR'S MANUAL

NOTE: SPECIFICATIONS MAY VARY BETWEEN MODELS, TIRE EQUIPMENT AND HYDRAULIC OPTIONS

IMPORTANT NOTE: DEALER INSTALLED LCS JOYSTICK IS VERY DIFFERENT FROM THE FACTORY INSTALLED MULTI-FUNCTION LOADER JOYSTICK, AND WILL HAVE LIMITED CAPABILITIES COMPARABLY.

NOTE: FRONT FENDERS POSITIONED AT NARROW TREAD SETTINGS MAY INTERFERE WITH THE LOADER LIFT CYLINDERS

FOR MORE INFORMATION ON DEALER INSTALLED LOADER OPTIONS SEE PAGE 72

Order Code	Catalog Number	Description	Factory Code	Approx. Weight (lb.)	List Price
BASE MACHINE - REQUIRED					**Group 01**
MF FL.4227	72533176	MFFL.4227 Base Loader, Non Self-Leveling . . . . . Includes Soft Drive with Electric Shutoff	68C7225	1390	9,384.00
MF FL.4327	72533164	MFFL.4327 Base Loader, Mechanical Self-Leveling . . . . . Includes Soft Drive with Electric Shutoff	87C9032	1590	11,731.00
MF FL.4327	72533253	MFFL.4327 Base Loader, Mechanical Self-Leveling . . . . . Includes Soft Drive with Electric Shutoff, Live 3rd Hoses Selecto Fix, Q-Companion Luxury Package **SPECIAL ORDER 12 WEEK LEAD TIME**	19C11663	TBD	15,147.00
		Loader Ready Tractors Include the Factory Installed Loader Subframe Mounting Kit and Loader Joystick for this Series Loader. Order the Base Loader Above, Options and Attachments to Complete the Loader.			
DEALER INSTALLED SUBFRAME MOUNTING KITS					**Group 02**
Choose One	72533886M	Subframe Kit for MF7714/S, 7715/S, 7716/S, and 7718/S . . . Dyna-4 or Dyna-6, Classic, Deluxe or Premium Editions	40C1940		2,520.00
	72533887M	Subframe Kit for MF7715/S, 7716/S, and 7718/S . . . . . Dyna-VT, Deluxe or Premium Editions	40C1940		2,520.00

Order Code	Catalog Number	Description	Factory Code	Approx. Weight (lb.)	List Price
DEALER INSTALLED 2 FUNCTION OPTIONS					**Group 03**
	72533198M	2 Function Mechanical Hydraulic Set, **Closed Center** Load Sensing, Includes Multifunction Mechanical Joystick for MF7714S, 7715S, 7716S, 7718S Only Classic Editions	08C1543		2,004.00
	72533976M	2 Function Mechanical Hydraulic Set, **Closed Center** Load Sensing, Includes Multifunction Mechanical Joystick for MF7714, 7715, 7716, 7718 Classic Editions	05C1513		1,965.00
	◆72533888M	2 Function **LCS** Mechanical Cable Controlled Joystick, **Closed Center** Load Sensing, for MF7714/S, 7715/S, 7716/S, 7718/S, Dyna-4 or Dyna-6, Classic Edition	50C1116		1,450.00
	72533950M	2 Function **LCS** Electric Controlled Joystick, **Closed Center** Load Sensing, for MF7715/S, 7716/S, 7718/S, Dyna-6, Deluxe or Premium Editions	73C2578		3,349.00
	72533890M	2 Function **LCS** Electric Controlled Joystick, **Closed Center** Load Sensing, for MF7715/S, 7716/S, 7718/S, Dyna-VT, Deluxe or Premium Editions	73C2578		3,349.00
	72533549M	Standard 2 Function Hose Set (No Joystick, Uses Tractor Remotes)	72C412		536.00

◆ **Requires 4313756M91 and 3796801M1 from AGCO Parts to complete hydraulic connection only for Dyna-4 or Dyna-6 with Closed Center Load Sensing**

3RD FUNCTION OPTIONS					**Group 04**
	72533279M	Third Function Electric Diverter Valve for Dealer Installed Loader Hydraulics or Loader Ready Tractors (Does not require Live 3rd Function Hose Kit)	12C659		856.00
	72533622M	Live 3rd Function for use with Dealer Installed 2 Function **LCS** Mechanical Cable Controlled Joystick (Requires Live 3rd Function Hose Kit for Loader Boom)	46C768		998.00
	72533621M	Live 3rd Function for use with Dealer Installed 2 Function **LCS** Electric Controlled Joystick (Requires Live 3rd Function Hose Kit for Loader Boom)	46C768		998.00
	72533979M	Live 3rd Function for 2 Function Cable Operated Multifunction Mechanical Joystick - Field or Factory Installed for MF7700/S Classic, **Closed Center** Load Sensing (Requires Live 3rd Function Hose Kit for Loader Boom) (Not Rated for Tractors that Exceed 29 GPM High Flow)	15C1459		1,895.00
	72533283M	Live 3rd Function Hose Kit for Loader Boom with Flat Face Couplers required with 72533622M, 72533621M and 72533979M or to Complete the Factory Installed Live 3rd Loader Provision (LL005)	41C256		333.00

Order Code	Catalog Number	Description	Factory Code	Approx. Weight (lb.)	List Price
HYDRAULIC OPTIONS					**Group 05**
		Only Compatible with Factory Installed Loader Ready Hydraulic Service Sets			
	72533343M	4 Coupler Quick Release Single Lever for Loader Ready Factory Installed 2 Function Hydraulic Set or Dealer Installed 72533976M	28C511		664.00
	72533344M	6 Coupler Quick Release Single Lever Compatible when adding a Dealer Installed Live 3rd 72533979M to Factory Installed 2 Function Cable Operated Valve or to Dealer Installed Multifunction Mechanical Joystick 72533976M	19C729		947.00
		Compatible with Dealer Installed LCS Hydraulic Service Sets			
	72533573M	MC4 Multicoupler, 4 Coupler Quick Release for Dealer Installed LCS Hydraulic Sets	11C495		643.00
	72533575M	MC2 Multicoupler, 2 Coupler Quick Release for LCS Live 3rd Hydraulic Sets (Requires MC4 Multicoupler)	19C421		547.00
ADDITIONAL HYDRAULIC OPTIONS					**Group 06**
		Compatible with Factory and Dealer Installed Hydraulic Service Sets			
	ACX2630550M	Hydraulic Implement Locking Set - Q Lock (Requires 3rd Function to Operate)	17C478		621.00
	72533296M	Hydraulic Implement Locking Electrical Switch Kit (Required with ACX2630550M on Classic Edition)	36C052		68.00
	72533289M	Loader Light Kit	54C463		602.00
	72533290M	Switch Kit for Loader Light (Required for 72533289M when no Q-Companion is Present)	61C071		93.00
	72533515M	Q-Companion Dealer Installed Complete Kit - Bluetooth (Included in Luxury Package)	90C2286		2,970.00
	72533516M	Q-Companion Screen Set for Additional Tractor - Bluetooth	50C1347		1,750.00
	72533297M	Selecto Fix Loader Part Flat Face Quick Release System for Hydraulic Implements (Requires 3rd Function)	21C441		573.00
	72533577M	Selecto Fix Implement Part Flat Face Quick Release System for Hydraulic Implements One Required with each Hydraulic Implement (Required with Selecto Fix Loader Part)	02C251		326.00

MFFL.4227 / MFFL.4327 LOADERS

NON SELF-LEVELING / MECHANICAL SELF-LEVELING

Order Code	Catalog Number	Description	Factory Code	Approx. Weight (lb.)	List Price
BUCKETS - OPTIONAL					**Group 07**
	72537006M	83-inch Material Bucket- GM 215	79C1098		1,427.00
	72537007M	95-inch Material Bucket- GM 245	25C1482		1,925.00
	72537008M	70-inch Heavy Duty Material Bucket - SM+ 180	03C1185		1,539.00
	72537014M	78-inch Heavy Duty Material Bucket - SM+ 200	85C1312		1,705.00
	72537019M	86-inch Heavy Duty Material Bucket - SM+ 220	42C1344		1,746.00
	72537023M	94-inch Heavy Duty Material Bucket - SM+ 240	63C1862		2,419.00
	72537028M	94-inch Heavy Duty Material Bucket - SM+ 240	63C1862		2,419.00
	72537035M	96-inch Light Material High Volume Bucket - VL 245	62C2083		2,706.00
	72537036M	96-inch Light Material High Volume Bucket - VL 265	62C2083		2,706.00
ATTACHMENTS - OPTIONAL					**Group 08**
	72533990M	Round Bale Spike	69C536	132	697.00
	72556285M	Big Bale Fork with Extension	85C773	273	1,005.00
	72556108M	83-inch Maxi-Grapple -210T (Tine Bucket)	77C4466	1367	5,801.00
	72556109M	95-inch Maxi-Grapple -240T (Tine Bucket)	74C4744	1444	6,162.00
	72556110M	102-inch Maxi-Grapple -260T (Tine Bucket)	61C4922	1610	6,393.00
	72556111M	83-inch Maxi-Grapple -210 (Standard Bucket)	03C4342	1334	5,639.00
	72556112M	95-inch Maxi-Grapple -240 (Standard Bucket)	54C4621	1411	6,002.00
	72556113M	102-inch Maxi-Grapple -260 (Standard Bucket)	01C4707	1567	6,113.00
	72556284M	48-inch Pallet Fork - 5,500 lbs (2,500 kg) Capacity	64C948	375	1,232.00
	72556264M	63-inch FlexiGrip 160 with Extension (for Round Bales) (Requires 3rd Function)	27C2195	610	2,851.00
	72556265M	79-inch FlexiGrip 200 (for Round Bales) (Requires 3rd Function)	61C2381	686	3,093.00
	72556058M	92-inch QuadroGrip 200 (for Round or Square Bales) (Requires 3rd Function)	48C3637	916	4,724.00
	72533693M	Log Grab (Requires 48-inch Pallet Fork) (Requires 3rd Function)	68C1450	187	1,884.00
	72533694M	Hydraulic Fork Shift Kit for 48-inch Pallet Forks (Requires 3rd Function)	56C945	165	1,228.00

Order Code	Catalog Number	Description	Factory Code	Approx. Weight (lb.)	List Price
ACCESSORIES - OPTIONAL					**Group 09**
		For 72537008M - 70-inch Euro Style HD Material Bucket - SM+ 180			
	72537009M	SM+ 180 Bolt On Tooth Set (Qty 6)	58C195		254.00
	72537010M	SM+ 180 Bolt On Hardened Edge	14C294		382.00
	72537011M	SM+ 180 Bolt On Plastic Edge	40C400		520.00
	72537012M	SM+ 180 Bolt On Serrated Edge	84C301		392.00
	72537013M	SM+ Bolt On Spill Guard	09C090		117.00
		For 725370014M - 78-inch Euro Style HD Material Bucket - SM+ 200			
	72537015M	SM+ 200 Bolt On Tooth Set (Qty 7)	69C228		297.00
	72537016M	SM+ 200 Bolt On Hardened Edge	48C326		424.00
	72537017M	SM+ 200 Bolt On Plastic Edge	91C448		583.00
	72537018M	SM+ 200 Bolt On Serrated Edge	65C342		445.00
	72537013M	SM+ Bolt On Spill Guard	09C090		117.00
		For 725370019M - 86-inch Euro Style HD Material Bucket - SM+ 220			
	72537015M	SM+ 200 Bolt On Tooth Set (Qty 7)	69C228		297.00
	72537020M	SM+ 220 Bolt On Hardened Edge	59C359		467.00
	72537021M	SM+ 220 Bolt On Plastic Edge	19C498		647.00
	72537022M	SM+ 220 Bolt On Serrated Edge	29C367		477.00
	72537013M	SM+ Bolt On Spill Guard	09C090		117.00
		For 725370023M - 94-inch Euro Style HD Material Bucket - SM+ 240			
	72537024M	SM+ 240 Bolt On Tooth Set (Qty 8)	03C261		339.00
	72537025M	SM+ 240 Bolt On Hardened Edge	93C391		509.00
	72537026M	SM+ 240 Bolt On Plastic Edge	70C546		710.00
	72537027M	SM+ 240 Bolt On Serrated Edge	48C403		524.00
	72537013M	SM+ Bolt On Spill Guard	09C090		117.00
		For 725370028M - 102-inch Euro Style HD Material Bucket - SM+ 260			
	72537029M	SM+ 260 Bolt On Tooth Set (Qty 9)	14C294		382.00
	72537030M	SM+ 260 Bolt On Hardened Edge	27C424		551.00
	72537031M	SM+ 260 Bolt On Plastic Edge	98C595		774.00
	72537032M	SM+ 260 Bolt On Serrated Edge	21C441		573.00
	72537013M	SM+ Bolt On Spill Guard	09C090		117.00
	72556105M	Back Screen For Radius Arm Grapple (Steel with Cutout Design)	57C262		341.00
	72556070M	Weld-On Hook Set - (to Adapt Attachments)	72C181	30	236.00
	72556069M	Counterweight - 3-Point Hitch (Empty)	43C815	276	1,059.00

MASSEY FERGUSON®

RESERVED

MFFL.4628 LOADER

MECHANICAL SELF-LEVELING

(F.O.B. Simpsonville, SC with Distribution Center in Alliston, Ontario)

MASSEY FERGUSON®

FEATURES

- One Piece 6 mm High Tensile Main Frame with Tapered and Embossed Arms
- Quick Attach Implement Mounting with Euro Style Single Lever Locking System
- 82 mm Arm Profile
- 95 mm Double Acting Lift Cylinders
- 100 mm Double Acting, Equal Displacement Bucket Cylinders
- Industrial Grade Hydraulic Fittings and Twin Braided Hoses, Incorporated Internally Inside Loader Boom
- Central Valve, Equalized Oil Distribution Valve with Incorporated Relief Valves
- Protective Hose Cover
- Bucket Level Indicator
- Compatible with MF7719/S, 7720/S, and 7722/S Tractors
- Lock and Go Loader / Subframe Connection System
- Pivots are Greasable and Include Industrial Grade Pins and Bushings
- Powder Painted with Corrosion Protection
- Front Bumper Guard (with Subframe Set)
- Buckets Have Heavy Duty, Welded-On Cutting Edge, Box Beam Section for Stiffness and Torsional Rigidity and Lateral Reinforcing Bars
- 177" (4.50 m) Lift Height to Pivot Pin
- 5490 lb. (2490 kg) Lift Capacity to Full Height, 31.5" (800 mm) Forward of Pivot Pin per ASABE 301.3 @ 2828 PSI
- Maximum Roll Back Angle: 49 Degrees
- Maximum Dump Angle: 54 Degrees

NOTE: TRACTORS MUST BE PROPERLY BALLASTED FOR LOADER OPERATION. SEE OPERATOR'S MANUAL

NOTE: SPECIFICATIONS MAY VARY BETWEEN MODELS, TIRE EQUIPMENT AND HYDRAULIC OPTIONS

IMPORTANT NOTE: DEALER INSTALLED LCS JOYSTICK IS VERY DIFFERENT FROM THE FACTORY INSTALLED MULTI-FUNCTION LOADER JOYSTICK, AND WILL HAVE LIMITED CAPABILITIES COMPARABLY.

FOR MORE INFORMATION ON DEALER INSTALLED LOADER OPTIONS SEE PAGE 72

Order Code	Catalog Number	Description	Factory Code	Approx. Weight (lb.)	List Price
BASE MACHINE - REQUIRED					**Group 01**
MF FL.4628	72533167	MFFL.4628 Base Loader, Mechanical Self-Leveling . . . . . Includes Soft Drive with Electric Shutoff	53C9539	1680	12,389.00
MF FL.4628	72533261	MFFL.4628 Base Loader, Mechanical Self-Leveling . . . . . Includes Soft Drive with Electric Shutoff, Live 3rd Hoses Selecto Fix, Q-Companion Luxury Package **SPECIAL ORDER 12 WEEK LEAD TIME**	85C12169	TBD	15,805.00
		Loader Ready Tractors Include the Factory Installed Loader Subframe Mounting Kit and Loader Joystick for this Series Loader. Order the Base Loader Above, Options and Attachments to Complete the Loader.			
DEALER INSTALLED SUBFRAME MOUNTING KITS					**Group 02**
Choose One	72533861M	Subframe Kit for MF7719/S, 7720/S and 7722/S. . . . . Dyna-6 or Dyna-VT, Classic, Deluxe or Premium Editions	43C2278		2,959.00

MFFL.4628 LOADER

MECHANICAL SELF-LEVELING

Order Code	Catalog Number	Description	Factory Code	Approx. Weight (lb.)	List Price
DEALER INSTALLED 2 FUNCTION OPTIONS					**Group 03**
	72533198M	2 Function Mechanical Hydraulic Set, **Closed Center** Load Sensing, Includes Multifunction Mechanical Joystick for MF7719S, 7720S, 7722S Only Classic Editions	08C1543		2,004.00
	72533976M	2 Function Mechanical Hydraulic Set, **Closed Center** Load Sensing, Includes Multifunction Mechanical Joystick for MF7719, 7720, 7722 Classic Editions	05C1513		1,965.00
	◆72533888M	2 Function **LCS** Mechanical Cable Controlled Joystick, **Closed Center** Load Sensing, for MF7719/S, 7720/S, 7722/S, Dyna-6, Classic Edition	50C1116		1,450.00
	72533950M	2 Function **LCS** Electric Controlled Joystick, **Closed Center** Load Sensing, for MF7719/S, 7720/S, 7722/S, Dyna-6, Deluxe or Premium Editions	73C2578		3,349.00
	72533890M	2 Function **LCS** Electric Controlled Joystick, **Closed Center** Load Sensing, for MF7719/S, 7720/S, 7722/S, Dyna-VT Deluxe or Premium	73C2578		3,349.00

◆ **Requires 4313756M91 and 3796801M1 from AGCO Parts to complete hydraulic connection only for Dyna-6 with Closed Center Load Sensing**

3RD FUNCTION OPTIONS					**Group 04**
	72533279M	Third Function Electric Diverter Valve for Dealer Installed Loader Hydraulics or Loader Ready Tractors (Does not require Live 3rd Function Hose Kit)	12C659		856.00
	72533622M	Live 3rd Function for use with Dealer Installed 2 Function **LCS** Mechanical Cable Controlled Joystick (Requires Live 3rd Function Hose Kit for Loader Boom)	46C768		998.00
	72533621M	Live 3rd Function for use with Dealer Installed 2 Function **LCS** Electric Controlled Joystick (Requires Live 3rd Function Hose Kit for Loader Boom)	46C768		998.00
	72533979M	Live 3rd Function for 2 Function Cable Operated Multifunction Mechanical Joystick - Field or Factory Installed for MF7700/S Classic, **Closed Center** Load Sensing (Requires Live 3rd Function Hose Kit for Loader Boom) (Not Rated for Tractors that Exceed 29 GPM High Flow)	15C1459		1,895.00
	72533284M	Live 3rd Function Hose Kit for Loader Boom with Flat Face Couplers required with 72533622M, 72533621M and 72533979M or to Complete the Factory Installed Live 3rd Loader Provision (LL005)	41C256		333.00

Order Code	Catalog Number	Description	Factory Code	Approx. Weight (lb.)	List Price
HYDRAULIC OPTIONS					**Group 05**
		Only Compatible with Factory Installed Loader Ready Hydraulic Service Sets			
	72533343M	4 Coupler Quick Release Single Lever for Loader Ready Factory Installed 2 Function Hydraulic Set or Dealer Installed 72533976M	28C511		664.00
	72533344M	6 Coupler Quick Release Single Lever Compatible when adding a Dealer Installed Live 3rd 72533979M to Factory Installed 2 Function Cable Operated Valve or to Dealer Installed Multifunction Mechanical Joystick 72533976M	19C729		947.00
		Compatible with Dealer Installed LCS Hydraulic Service Sets			
	72533573M	MC4 Multicoupler, 4 Coupler Quick Release for Dealer Installed LCS Hydraulic Sets	11C495		643.00
	72533575M	MC2 Multicoupler, 2 Coupler Quick Release for LCS Live 3rd Hydraulic Sets (Requires MC4 Multicoupler)	19C421		547.00
ADDITIONAL HYDRAULIC OPTIONS					**Group 06**
		Compatible with Factory and Dealer Installed Hydraulic Service Sets			
	ACX2630550M	Hydraulic Implement Locking Set - Q Lock (Requires 3rd Function to Operate)	17C478		621.00
	72533296M	Hydraulic Implement Locking Electrical Switch Kit (Required with ACX2630550M on Classic Edition)	36C052		68.00
	72533289M	Loader Light Kit.	54C463		602.00
	72533290M	Switch Kit for Loader Light (Required for 72533289M when no Q-Companion is Present)	61C071		93.00
	72533515M	Q-Companion Dealer Installed Complete Kit - Bluetooth (Included in Luxury Package)	90C2286		2,970.00
	72533516M	Q-Companion Screen Set for Additional Tractor - Bluetooth	50C1347		1,750.00
	72533297M	Selecto Fix Loader Part Flat Face Quick Release System for Hydraulic Implements (Requires 3rd Function)	21C441		573.00
	72533577M	Selecto Fix Implement Part. Flat Face Quick Release System for Hydraulic Implements One Required with each Hydraulic Implement (Required with Selecto Fix Loader Part)	02C251		326.00
BUCKETS - OPTIONAL					**Group 07**
	72537006M	83-inch Material Bucket- GM 215	79C1098		1,427.00
	72537007M	95-inch Material Bucket- GM 245	25C1482		1,925.00
	72537014M	78-inch Heavy Duty Material Bucket - SM+ 200	85C1312		1,705.00
	72537019M	86-inch Heavy Duty Material Bucket - SM+ 220	42C1344		1,746.00
	72537023M	94-inch Heavy Duty Material Bucket - SM+ 240	63C1862		2,419.00
	72537028M	94-inch Heavy Duty Material Bucket - SM+ 240	63C1862		2,419.00
	72537035M	96-inch Light Material High Volume Bucket - VL 245.	62C2083		2,706.00
	72537036M	96-inch Light Material High Volume Bucket - VL 245.	62C2083		2,706.00

MFFL.4628 LOADER

MECHANICAL SELF-LEVELING

MASSEY FERGUSON®

Order Code	Catalog Number	Description	Factory Code	Approx. Weight (lb.)	List Price
ATTACHMENTS - OPTIONAL					**Group 08**
	72533990M	Round Bale Spike	69C536	132	697.00
	72556285M	Big Bale Fork with Extension	85C773	273	1,005.00
	72556108M	83-inch Maxi-Grapple -210T (Tine Bucket)	77C4466	1367	5,801.00
	72556109M	95-inch Maxi-Grapple -240T (Tine Bucket)	74C4744	1444	6,162.00
	72556110M	102-inch Maxi-Grapple -260T (Tine Bucket)	61C4922	1610	6,393.00
	72556111M	83-inch Maxi-Grapple -210 (Standard Bucket)	03C4342	1334	5,639.00
	72556112M	95-inch Maxi-Grapple -240 (Standard Bucket)	54C4621	1411	6,002.00
	72556113M	102-inch Maxi-Grapple -260 (Standard Bucket)	01C4707	1567	6,113.00
	72556284M	48-inch Pallet Fork - 5,500 lbs (2,500 kg) Capacity	64C948	375	1,232.00
	Requires 3rd Function				
	72556264M	63-inch FlexiGrip 160 with Extension (for Round Bales)	27C2195	610	2,851.00
	72556265M	79-inch FlexiGrip 200 (for Round Bales)	61C2381	686	3,093.00
	72556058M	92-inch QuadroGrip 200 (for Round or Square Bales)	48C3637	916	4,724.00
	72533693M	Log Grab (Requires 48-inch Pallet Fork)	68C1450	187	1,884.00
	72533694M	Hydraulic Fork Shift Kit for 48-inch Pallet Forks	56C945	165	1,228.00
ACCESSORIES - OPTIONAL					**Group 09**
		For 725370014M - 78-inch Euro Style HD Material Bucket - SM+ 200			
	72537015M	SM+ 200 Bolt On Tooth Set (Qty 7)	69C228		297.00
	72537016M	SM+ 200 Bolt On Hardened Edge	48C326		424.00
	72537017M	SM+ 200 Bolt On Plastic Edge	91C448		583.00
	72537018M	SM+ 200 Bolt On Serrated Edge	65C342		445.00
	72537013M	SM+ Bolt On Spill Guard	09C090		117.00
		For 725370019M - 86-inch Euro Style HD Material Bucket - SM+ 220			
	72537015M	SM+ 200 Bolt On Tooth Set (Qty 7)	69C228		297.00
	72537020M	SM+ 220 Bolt On Hardened Edge	59C359		467.00
	72537021M	SM+ 220 Bolt On Plastic Edge	19C498		647.00
	72537022M	SM+ 220 Bolt On Serrated Edge	29C367		477.00
	72537013M	SM+ Bolt On Spill Guard	09C090		117.00
		For 725370023M - 94-inch Euro Style HD Material Bucket - SM+ 240			
	72537024M	SM+ 240 Bolt On Tooth Set (Qty 8)	03C261		339.00
	72537025M	SM+ 240 Bolt On Hardened Edge	93C391		509.00
	72537026M	SM+ 240 Bolt On Plastic Edge	70C546		710.00
	72537027M	SM+ 240 Bolt On Serrated Edge	48C403		524.00
	72537013M	SM+ Bolt On Spill Guard	09C090		117.00
		For 725370028M - 102-inch Euro Style HD Material Bucket - SM+ 260			
	72537029M	SM+ 260 Bolt On Tooth Set (Qty 9)	14C294		382.00
	72537030M	SM+ 260 Bolt On Hardened Edge	27C424		551.00
	72537031M	SM+ 260 Bolt On Plastic Edge	98C595		774.00
	72537032M	SM+ 260 Bolt On Serrated Edge	21C441		573.00
	72537013M	SM+ Bolt On Spill Guard	09C090		117.00
	72556105M	Back Screen For Radius Arm Grapple (Steel w/Cutout Design)	57C262		341.00
	72556070M	Weld-On Hook Set - (to Adapt Attachments)	72C181	30	236.00
	72556069M	Counterweight - 3-Point Hitch (Empty)	43C815	276	1,059.00

MFFL.5033 LOADER

MECHANICAL SELF-LEVELING

(F.O.B. Telford, TN with Distribution Center in Alliston, Ontario)

MASSEY FERGUSON®

FEATURES

- One Piece 6 mm High Tensile Main Frame with Tapered and Embossed Arms
- Quick Attach Implement Mounting with Euro Style Single Lever Locking System
- 82 mm Arm Profile
- 95 mm Double Acting Lift Cylinders
- 100 mm Double Acting, Equal Displacement Bucket Cylinders
- Industrial Grade Hydraulic Fittings and Twin Braided Hoses, Incorporated Internally Inside Loader Boom
- Central Valve, Equalized Oil Distribution Valve with Incorporated Relief Valves
- Protective Hose Cover
- Bucket Level Indicator
- Compatible with MF7724/S, 7726/S, and MF8700/S Series
- Lock and Go Loader / Subframe Connection System
- Pivots are Greasable and Include Industrial Grade Pins and Bushings
- Powder Painted with Corrosion Protection
- Front Bumper Guard (with Subframe Set)
- Buckets Have Heavy Duty, Welded-On Cutting Edge, Box Beam Section for Stiffness and Torsional Rigidity and Lateral Reinforcing Bars
- 195" (4.95 m) Lift Height to Pivot Pin
- 5710 lb. (2590 kg) Lift Capacity to Full Height, 31.5" (800 mm) Forward of Pivot Pin per ASABE 301.3 @ 2828 PSI
- Maximum Roll Back Angle: 47 Degrees
- Maximum Dump Angle: 53 Degrees

NOTE: TRACTORS MUST BE PROPERLY BALLASTED FOR LOADER OPERATION. SEE OPERATOR'S MANUAL

NOTE: SPECIFICATIONS MAY VARY BETWEEN MODELS, TIRE EQUIPMENT AND HYDRAULIC OPTIONS

IMPORTANT NOTE: DEALER INSTALLED LCS JOYSTICK IS VERY DIFFERENT FROM THE FACTORY INSTALLED MULTI-FUNCTION LOADER JOYSTICK, AND WILL HAVE LIMITED CAPABILITIES COMPARABLY.

FOR MORE INFORMATION ON DEALER INSTALLED LOADER OPTIONS SEE PAGE 72

Order Code	Catalog Number	Description	Factory Code	Approx. Weight (lb.)	List Price
BASE MACHINE - REQUIRED					**Group 01**
MF FL.5033	72533170	MFFL.5033 Base Loader, Mechanical Self-Leveling . . . . . Includes Soft Drive with Electric Shutoff	26C12118	1830	15,738.00
MF FL.5033	72533271	MFFL.5033 Base Loader, Mechanical Self-Leveling . . . . . Includes Soft Drive with Electric Shutoff, Live 3rd Hoses Selecto Fix, Q-Companion Luxury Package **SPECIAL ORDER 12 WEEK LEAD TIME**	58C14748	TBD	19,154.00

Loader Ready Tractors Include the Factory Installed Loader Subframe Mounting Kit and Loader Joystick for this Series Loader. Order the Base Loader Above, Options and Attachments to Complete the Loader.

DEALER INSTALLED SUBFRAME MOUNTING KITS					**Group 02**
Choose One	72533862M	Subframe Kit for MF7724/S, 7726/S, Dyna-6 or Dyna-VT, . . . Classic, Deluxe or Premium Editions	72C2722		3,536.00
	ACX2812300M	Subframe Kit for MF8700/S Series, Dyna-VT	72C2722	924	3,536.00
DEALER INSTALLED 2 FUNCTION OPTIONS (Closed Center Load Sensing)					**Group 03**
	72533198M	2 Function Mechanical Hydraulic Set, Includes Multifunction . Mechanical Joystick for MF7724S and 7726S Only Classic Editions	08C1543		2,004.00
	72533976M	2 Function Mechanical Hydraulic Set, Includes Multifunction . Mechanical Joystick for MF7724 and 7726, Classic Editions	05C1513		1,965.00
	◆72533888M	2 Function **LCS** Mechanical Cable Controlled Joystick, ... for MF7724/S and 7726/S, Dyna-6, Classic Edition	50C1116		1,450.00
	72533950M	2 Function **LCS** Electric Controlled Joystick, ... for MF7724/S and 7726/S, Dyna-6, Deluxe or Premium Editions	73C2578		3,349.00
	72533890M	2 Function **LCS** Electric Controlled Joystick, ... for MF7724/S and 7726/S, Dyna-VT, Deluxe or Premium Editions	73C2578		3,349.00
	72533620M	2 Function **LCS** Electric Controlled Joystick, ... for MF8700/S Series, Dyna-VT	73C2578		3,349.00

◆ **Requires 4313756M91 and 3796801M1 from AGCO Parts to complete hydraulic connection for Dyna-6**

MFFL.5033 LOADER

MECHANICAL SELF-LEVELING

Order Code	Catalog Number	Description	Factory Code	Approx. Weight (lb.)	List Price
3RD FUNCTION OPTIONS					**Group 04**
	72533280M	3rd Function Electric Diverter Valve for Dealer Installed Loader Hydraulics or Loader Ready Tractors (Does not require Live 3rd Function Hose Kit)	12C659		856.00
	72533622M	Live 3rd Function for use with Dealer Installed 2 Function **LCS** Mechanical Cable Controlled Joystick (Requires Live 3rd Function Hose Kit for Loader Boom)	46C768		998.00
	72533621M	Live 3rd Function for use with Dealer Installed 2 Function **LCS** Electric Controlled Joystick (Requires Live 3rd Function Hose Kit for Loader Boom)	46C768		998.00
	72533979M	Live 3rd Function for 2 Function Cable Operated Multifunction Mechanical Joystick - Field or Factory Installed for MF7700/S Classic, **Closed Center** Load Sensing (Requires Live 3rd Function Hose Kit for Loader Boom) (Not Rated for Tractors that Exceed 29 GPM High Flow)	15C1459		1,895.00
	72533285M	Live 3rd Function Hose Kit for Loader Boom with Flat Face Couplers required with 72533622M, 72533621M and 72533979M or to Complete the Factory Installed Live 3rd Loader Provision (LL005)	41C256		333.00
HYDRAULIC OPTIONS					**Group 05**
		Only Compatible with Factory Installed Loader Ready Hydraulic Service Sets			
	72533343M	4 Coupler Quick Release Single Lever for Loader Ready Factory Installed 2 Function Hydraulic Set or Dealer Installed 72533976M	28C511		664.00
	72533344M	6 Coupler Quick Release Single Lever Compatible when adding a Dealer Installed Live 3rd 72533979M to Factory Installed 2 Function Cable Operated Valve or to Dealer Installed Multifunction Mechanical Joystick 72533976M	19C729		947.00
		Compatible with Dealer Installed LCS Hydraulic Service Sets			
	72533573M	MC4 Multicoupler, 4 Coupler Quick Release for Dealer Installed LCS Hydraulic Sets	11C495		643.00
	72533575M	MC2 Multicoupler, 2 Coupler Quick Release for LCS Live 3rd Hydraulic Sets (Requires MC4 Multicoupler)	19C421		547.00
ADDITIONAL HYDRAULIC OPTIONS					**Group 06**
		Compatible with Factory and Dealer Installed Hydraulic Service Sets			
	ACX2630560M	Hydraulic Implement Locking Set - Q Lock (Requires 3rd Function to Operate)	17C478		621.00
	72533296M	Hydraulic Implement Locking Electrical Switch Kit (Required with ACX2630560M on Classic Edition)	36C052		68.00
	72533289M	Loader Light Kit.	54C463		602.00
	72533290M	Switch Kit for Loader Light (Required for 72533289M when no Q-Companion is Present)	61C071		93.00
	72533515M	Q-Companion Dealer Installed Complete Kit - Bluetooth (Included in Luxury Package)	90C2286		2,970.00
	72533516M	Q-Companion Screen Set for Additional Tractor - Bluetooth	50C1347		1,750.00
	72533297M	Selecto Fix Loader Part, Flat Face Quick Release System for Hydraulic Implements (Requires 3rd Function)	21C441		573.00
	72533577M	Selecto Fix Implement Part, Flat Face Quick Release System for Hydraulic Implements, One Required with each Hydraulic Implement (Required with Selecto Fix Loader Part)	02C251		326.00

MFFL.5033 LOADER

MECHANICAL SELF-LEVELING

MASSEY FERGUSON®

Order Code	Catalog Number	Description	Factory Code	Approx. Weight (lb.)	List Price
BUCKETS - OPTIONAL					**Group 07**
	72537006M	83-inch Material Bucket- GM 215	79C1098		1,427.00
	72537007M	95-inch Material Bucket- GM 245	25C1482		1,925.00
	72537023M	94-inch Heavy Duty Material Bucket - SM+ 240	63C1862		2,419.00
	72537028M	94-inch Heavy Duty Material Bucket - SM+ 240	63C1862		2,419.00
	72537035M	96-inch Light Material High Volume Bucket - VL 245	62C2083		2,706.00
	72537036M	96-inch Light Material High Volume Bucket - VL 245	62C2083		2,706.00
ATTACHMENTS - OPTIONAL					**Group 08**
	72533990M	Round Bale Spike	69C536	132	697.00
	72556285M	Big Bale Fork with Extension	85C773	273	1,005.00
	72556108M	83-inch Maxi-Grapple -210T (Tine Bucket)	77C4466	1367	5,801.00
	72556109M	95-inch Maxi-Grapple -240T (Tine Bucket)	74C4744	1444	6,162.00
	72556110M	102-inch Maxi-Grapple -260T (Tine Bucket)	61C4922	1610	6,393.00
	72556111M	83-inch Maxi-Grapple -210 (Standard Bucket)	03C4342	1334	5,639.00
	72556112M	95-inch Maxi-Grapple -240 (Standard Bucket)	54C4621	1411	6,002.00
	72556113M	102-inch Maxi-Grapple -260 (Standard Bucket)	01C4707	1567	6,113.00
	72556284M	48-inch Pallet Fork - 5,500 lbs (2,500 kg) Capacity	64C948	375	1,232.00
	72556264M	63-inch FlexiGrip 160 with Extension (for Round Bales) (Requires 3rd Function)	27C2195	610	2,851.00
	72556265M	79-inch FlexiGrip 200 (for Round Bales) (Requires 3rd Function)	61C2381	686	3,093.00
	72556058M	92-inch QuadroGrip 200 (for Round or Square Bales) (Requires 3rd Function)	48C3637	916	4,724.00
	72533693M	Log Grab (Requires 48-inch Pallet Fork) (Requires 3rd Function)	68C1450	187	1,884.00
	72533694M	Hydraulic Fork Shift Kit for 48-inch Pallet Forks (Requires 3rd Function)	56C945	165	1,228.00
ACCESSORIES - OPTIONAL					**Group 09**
		For 725370023M - 94-inch Euro Style HD Material Bucket - SM+ 240			
	72537024M	SM+ 240 Bolt On Tooth Set (Qty 8)	03C261		339.00
	72537025M	SM+ 240 Bolt On Hardened Edge	93C391		509.00
	72537026M	SM+ 240 Bolt On Plastic Edge	70C546		710.00
	72537027M	SM+ 240 Bolt On Serrated Edge	48C403		524.00
	72537013M	SM+ Bolt On Spill Guard	09C090		117.00
		For 725370028M - 102-inch Euro Style HD Material Bucket - SM+ 260			
	72537029M	SM+ 260 Bolt On Tooth Set (Qty 9)	14C294		382.00
	72537030M	SM+ 260 Bolt On Hardened Edge	27C424		551.00
	72537031M	SM+ 260 Bolt On Plastic Edge	98C595		774.00
	72537032M	SM+ 260 Bolt On Serrated Edge	21C441		573.00
	72537013M	SM+ Bolt On Spill Guard	09C090		117.00
	72556105M	Back Screen For Radius Arm Grapple (Steel with Cutout Design)	57C262		341.00
	72556070M	Weld-On Hook Set - (to Adapt Attachments)	72C181	30	236.00
	72556069M	Counterweight - 3-Point Hitch (Empty)	43C815	276	1,059.00

MASSEY FERGUSON®

RESERVED

DEALER INSTALLED CUE LOADER OPTIONS

Dealer Installed CUE Loader Options

MASSEY FERGUSON®

WHOLEGOODS

Order Separately from Loader through Field Installed Options Tab in eOrdering

DEALER / FIELD INSTALLED ACCESSORIES

CATALOG NUMBER	DESCRIPTION	FL1805	FLx2106	FLx2407	FL2611	FL2814	FLx2815	FACTORY CODE	LIST PRICE
72530649AC	Soft Drive Ride Control System	X	X		X	X	X	A41735	491.00
72533081AC	Third Function Valve with Deutsch Connector (Requires Tractor Series Wiring Harness)	X	X		X	X	X	A48875	575.00
72533082AC	Third Function Wiring Harness (GC1700)	X						A15300	180.00
72530694AC	Third Function Wiring Harness (1526H/2700E/2800E)		X				X	A18615	219.00
72530658M	Third Function Valve & Wiring Harness (1700E/1800E)			X				A66045	777.00
72530693AC	Third Function Wiring Harness (1700M/1800M/2800M)				X	X		A18615	219.00
72530695AC	Third Function Wiring Harness (2600H)						X	A18615	219.00
72533089AC	Skid Steer Quick Attach Tool Carrier		X					A30940	364.00
72530745M	Skid Steer Quick Attach Tool Carrier			X				A48025	565.00
72530671AC	Skid Steer Quick Attach Tool Carrier						X	A48025	565.00

BUCKETS AND ATTACHMENTS

CATALOG NUMBER	DESCRIPTION	FL1805	FLx2106	FLx2407	FL2611	FL2814	FLx2815	FACTORY CODE	LIST PRICE
72533144M	48-inch Skid Steer Bucket 6.00 ft^3 (0.17m^3)	X						A37740	444.00
72533145AC	54-inch Skid Steer Bucket 6.71 ft^3 (0.19m^3)	X	X					A42500	500.00
72533084M	54-inch Pin-Type Bucket 6.71 ft^3 (0.19m^3)		X					A40375	475.00
72530659M	60-inch Pin-Type Bucket 9.89 ft^3 (0.28m^3)			X				A57460	676.00
72530660M	60-inch Skid Steer Bucket 9.89 ft^3 (0.28m^3)			X				A47090	554.00
72533147M	66-inch Skid Steer Bucket 10.6 ft^3 (0.30m^3)				X			A47515	559.00
72530648M	72-inch Pin-Type Bucket 11.7 ft^3 (0.33m^3)						X	A47600	560.00
72533148M	72-inch Skid Steer Bucket 11.7 ft^3 (0.33m^3)				X	X	X	A50575	595.00
72533149M	72-inch High Vol Skid Steer Bucket - 18.7 ft^3 (0.53m^3)				X	X	X	A86615	1,019.00
72533937M	Bolt On Cutting Edge for 72-inch HV Skid Steer Bucket				X	X	X	A18190	214.00
72533690M	38-inch Skid Steer Pallet Fork 2,200 lbs (1000 kg) Capacity				X	X	X	A87465	1,029.00
72533988M	Skid Steer Bale Spike				X	X	X	A60605	713.00

MASSEY FERGUSON®

DEALER INSTALLED PROFESSIONAL LOADER OPTIONS

Dealer Installed Professional Loader Options

MASSEY FERGUSON®

ITEM	CATALOG #	DESCRIPTION	WEIGHT
4 Coupler Quick Release	72533343M	4 Coupler Quick Release Compatible with Factory Installed Loader Valve	
6 Couple Quick Release	72533344M	6 Coupler Quick Release Single Lever Compatible When Adding Dealer Installed Live 3rd to Factory Installed Two Function Cable Operated Valve	
Material Bucket	72556037M 72556038M 72556039M	73" Material Bucket, 25 cu ft 83" Material Bucket 210H, 24 cu ft 95" Material Bucket 240H, 28 cu ft	205kg 452lb 252kg 556lb 294kg 648lb
Heavy Duty Material Bucket	72556041M 72556042M 72556043M 72556044M	73" Heavy Duty Material Bucket 185HD, 25 cu ft 83" Heavy Duty Material Bucket 210HD, 29 cu ft 95" Heavy Duty Material Bucket 240HD, 34 cu ft 102" Heavy Duty Material Bucket 260HD, 36 cu ft	235kg 518lb 285kg 628lb 340kg 750lb 365kg 805lb
Heavy Duty High Volume Bucket	72556261M 72556262M 72556263M	83" Heavy Duty Volume Bucket 210HDV, 53 cu ft 95" Heavy Duty Volume Bucket 240HDV, 60 cu ft 102" Heavy Duty Volume Bucket 260HDV, 65.3 cu ft	917lb 955lb 1,036lb
Construction Tooth Bucket	72556046M 72556047M 72556048M	63" Construction Tooth Bucket 160HT, 23 cu ft 73" Construction Tooth Bucket 185HT, 25 cu ft 83" Construction Tooth Bucket 210HT, 29 cu ft	172kg 379lb 211kg 465lb 259kg 571lb
Light Material/Snow Bucket	72556049M 72556050M	79" Light Material / Snow Bucket, 41 cu ft 87" Light Material / Snow Bucket, 44 cu ft	273kg 602lb 294kg 648lb
Pallet Fork	72556284M	48” Pallet Fork - 5,500 lbs (2,500 kg) Capacity	170kg 375lb
Bale Spike	72533990M	Round Bale Spike	60kg 132lb

Dealer Installed Professional Loader Options

MASSEY FERGUSON®

ITEM	CATALOG #	DESCRIPTION	WEIGHT
Big Bale Fork	72556285M	Big Bale Fork with Extension	124kg 273lb
Log Grab For all Pallet Fork Attachments	72533693M	Log Grab (Requires 48" Pallet Fork) (Requires 3rd Function)	85kg 187lb
Hydraulic Fork Shift Kit for 48-inch Pallet Forks	72533694M	Hydraulic Fork Shift Kit (Requires 3rd Function)	75kg 165lb
Flexigrip with Backstop	72556264M 72556265M	63" FlexiGrip 160 (for Round Bales) 79" FlexiGrip 200 (for Round Bales)	276kg 607lb 312kg 686lb
Quadrogrip with Backstop	72556058M	QuadroGrip (Round or Square Bales)	416kg 916lb
Maxi-Grapple **(BACK SCREEN NOT INCLUDED)** **GRAPPLE ASSEMBLY WITH BUCKET AND TINES** 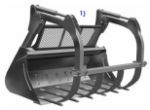	72556108M 72556109M 72556110M	83" Maxi-Grapple MK2 - T210 (Tine Bucket) 95" Maxi-Grapple MK2 - T 240 (Tine Bucket) 102" Maxi-Grapple MK2 - T 260 (Tine Bucket)	620kg 1367lb 655kg 1444lb 730kg 1610lb
Maxi-Grapple **(BACK SCREEN NOT INCLUDED) GRAPPLE ASSEMBLY COMPLETE (NO TINES)**	72556111M 72556112M 72556113M	83" Maxi-Grapple MK2 - 210 (Standard Bucket) 95" Maxi-Grapple MK2 - 240 (Standard Bucket) 102" Maxi-Grapple MK2 - 260 (Standard Bucket)	605kg 1334lb 640kg 1411lb 710kg 1567lb
Back Screen - For Maxi-Grapple	72556105M	Back Screen for Maxi-Grapple Assembly	
Counterweight Three Point Hitch (Empty)	72556069M	Counterweight - 3-Point Hitch (Empty)	125kg 276lb
Weld-On Hook Set	72556070M	Weld-On Hook Set (to Adapt Customers Attachments)	

MASSEY FERGUSON®

Dealer Installed Professional Loader Options

ITEM	CATALOG #	DESCRIPTION	WEIGHT
Selecto Fix Loader Part 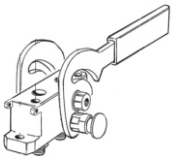	72533576M	Selecto Fix Loader Part (Flat Face Quick Release System for Hydraulic Implements) Requires 3rd Function	
Selecto Fix Implement Part 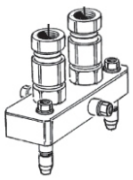	72533577M	Selecto Fix Implement Part (Flat Face Quick Release System for Hydraulic Implements) One Required with each Hydraulic Implement (Required with Selecto Fix Loader Part)	
Implement Lock 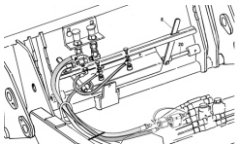	72533571M 72533572M	Hydraulic Implement Locking Set, Requires Third Function to operate	
MC4 Multicoupler	72533573M	MC4 Multicoupler, 4 Coupler Quick Release for Dealer Installed LCS Hydraulic Service Sets	
MC2 Multicoupler 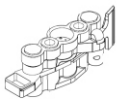	72533575M	MC2 Multicoupler, 2 Coupler Quick Release for Dealer Installed LCS "LIVE 3rd" hydraulic Service Sets, When ordering also order MC4 Multicoupler	

MOWERS

MOWER APPLICATION CHART

TRACTOR MODEL	2315 Mower (54")	2320 Mower (54")	2326 Mower (60")	1505 Mower (60")	1705 Mower (72")
GC1723E GC1725M GC1705 GC1715	X	X	X		
GC1723EB GC1725MB GC1710 TLB GC1720 TLB	X	X	X		
1526H				X	
1835M, 1735M, 1740M Platform and Cab					X

MF2300 SERIES MOWER

MASSEY FERGUSON®

(F.O.B. Port of Entry)

FEATURES

- Mid-Mounted Stamped Tunnel Deck
- Right Hand Discharge (only on MF2320 and 2326)
- Mulching Deck (Only 2315)
- Cutting Width:
  MF2315: 54 inches
  MF2320: 54 inches
  MF2326: 60 inches
- Six (6) Overlapping Offset Mulching Blades on MF2315
  Three (3) Overlapping Offset Blades on MF2320 and MF2326
- Cutting Height:
  MF2315: 1.3 - 4.9 inches
  MF2320: 1.2 - 4.7 inches
  MF2326: 1.2 - 4.7 inches
- Lift: Parallel Linkage, Hydraulic
- Transport Height: 5.9 inches
- Lock-up Kit Standard. Allows use of 3-Point
- Quick Disconnect with Single Handle Front Latch and Two Spring Loaded Pins at Rear
- Compatible with Loader and Backhoe
- Mid PTO Driveshaft to Mower Gear Box
- Blade Tip Speed:
  MF2315: 16,200 FPM
  MF2320: 17,200 FPM
  MF2326: 17,600 FPM
- Two (2) Front Hard Rubber Gauge Wheels with Bearings, Castering Regreasable
- Two (2) Rear Hard Rubber Gauge Wheels with Bearings, Regreasable
- One (1) Front Roller and Two (2) Rear Rollers
- **Note! Backhoe must be removed on TLB versions in order to install mower**

Order Code	Catalog Number	Description	Factory Code	Approx. Weight (lb.)	List Price
MF2300 Series		**MF2300 Series Base Mower**			
MF2315-SSM54	7492001	MF2315 54-inch Mower Deck (Mulching) - Non-Drive Over. For all GC1700 Series Tractors	30C2174		2,558.00
MF2320-SSM54	7491001	MF2320 54-inch Mower Deck - Non-Drive Over. . . . . For all GC1700 Series Tractors	15C1971		2,319.00
MF2326-SSM60	72530409	MF2326 60-inch Mower Deck - Drive Over . . . . . For all GC1700 Series Tractors	80C2182	275	2,568.00

MASSEY FERGUSON®

RESERVED

MF1505 MID-MOUNT MOWER

MASSEY FERGUSON®

(F.O.B. Port of Entry)

FEATURES

- Mid-Mount Stamped Tunnel Deck
- 60-inch Cutting Width
- Three (3) Overlapping Offset Blades
- Cutting Height: 2 To 4 Inches
- Lift:
  Parallel Lift Connected to Left Hand 3-Point Lift Arm
  Lift Height Approximately 6 inches
  Lift Lockup Allows Use of 3-Point with Mower Raised
- Right Hand Hinged Discharge Chute
- Quick Disconnect with Single Handle Front Latch and Two Spring Loaded Pins at Rear
- Compatible with Loader
- Mower Fits MF1526H
- Mid PTO Shaft Drive To Mower Gearbox
- One Center Mounted Front Anti-Scalp Roller
- Two Adjustable Non-Caster Rear Outboard Anti-Scalp Wheels
- Two Adjustable, Castering Front Gauge Wheels with Greasable Bearings
- Two Adjustable Non Castering Rear Inner Gauge Wheels with Greasable Bearings
- **Note: If Tractor is equipped with backhoe it must be removed in order to operate mid mount mower**

Order Code	Catalog Number	Description	Factory Code	Approx. Weight (lb.)	List Price
MF1505		**MF1505 BASE MID MOUNT MOWER**			
SSM60 RMF1526ME3	72530243	60-inch Mower Deck for MF1526 Hydro . . . . . (Includes Driveline and Mid PTO Gearbox to Attach to MF1526 Tractor)	40C2519		2,964.00

MASSEY FERGUSON®

RESERVED

MF1705 MID-MOUNT MOWER

MASSEY FERGUSON®

(F.O.B. Port of Entry)

FEATURES

- Mid-Mount Stamped Tunnel Deck
- 72-inch Cutting Width
- Three (3) Overlapping Offset Blades
- Cutting Height: 2 To 4 inches
- Lift:
  Parallel Lift Connected to Left Hand 3-Point Lift Arm
  Lift Height Approximately 6 inches
  Lift Lockup Allows Use of 3-Point with Mower Raised
- Right Hand Hinged Discharge Chute
- Quick Disconnect with Single Handle Front Latch and Two Spring Loaded Pins at Rear
- Not Compatible with MFDL120 Loader
- Compatible with Loader when Tractor is Equipped with tire combinations:
  Front: 27x8.50-15 NHS 6P / Rear: 41x14.00-20 NHS 4P Turf tire; **or**
  Front: 25x8.5-14 NHS 6P / Rear: 15-19.5 6P R4 Industrial Tire **Only**
- Mower Fits MF1835M, 1735M and 1740M Platform and Cab
- Mid PTO Shaft Drive To Mower Gearbox
- One Center Mounted Front Anti-Scalp Roller
- Two Adjustable Non-Caster Rear Outboard Anti-Scalp Wheels
- Two Adjustable, Castering Front Gauge Wheels with Greasable Bearings
- Two Adjustable Non Castering Rear Inner Gauge Wheels with Greasable Bearings
- **Note: If Tractor is equipped with backhoe it must be removed in order to operate mid mount mower**

Order Code	Catalog Number	Description	Factory Code	Approx. Weight (lb.)	List Price
MF1705		**MF1705 BASE MID MOUNT MOWER**			
SSM72 RMF1736ME3	72530399	72-inch Mower Deck for MF1835M, 1735M, 1740M Platform and Cab (Includes Driveline and Mid PTO Gearbox to Attach to Tractor)	65C3492	492	4,109.00

MASSEY FERGUSON®

RESERVED

BACKHOES

MASSEY FERGUSON®

BACKHOE APPLICATION CHART

TRACTOR MODEL	BH3222 BACKHOE	CB75 BACKHOE	CB85 BACKHOE
MF1800E, 1700E	X		
MF1835M, 1840M, 1735M, 1740M, 1736 and 1742		X	
MF2850M, 2855M, 2860M, 1750M, 1755M, 1760M, 1759			X
MF2800E, 2700E			X

COMPATIBILITY CHART

Catalog Number	Description	BH3222	BH2720	CB75	CB85
72530661M	9-inch Bucket with 3 Replaceable Teeth (.85 cu ft)	X			
72530662M	12-inch Bucket with 3 Replaceable Teeth (1.18 cu ft)	X			
72530663M	16-inch Bucket with 4 Replaceable Teeth (1.64 cu ft)	X			
72530665M	Big Foot Stabilizer Pads	X			
72530666M	Stabilizer Rubber Street Pads	X			
72530667M	Mechanical Thumb Kit	X			
72533783M	10-inch Bucket with 2 Replaceable Teeth (.57 cu ft)		X	X	
72533784M	12-inch Bucket with 3 Replaceable Teeth (.71 cu ft)		X	X	
72533785M	16-inch Bucket with 3 Replaceable Teeth (.95 cu ft)		X	X	
72533786M	10-inch Bucket with 2 Replaceable Teeth (.81 cu ft)			X	X
72533787M	12-inch Bucket with 3 Replaceable Teeth (1.02 cu ft)			X*	X
72533788M	16-inch Bucket with 3 Replaceable Teeth (1.38 cu ft)			X*	X
72533789M	18-inch Bucket with 3 Replaceable Teeth (1.57 cu ft)			X*	X
72533790M	24-inch Bucket with 4 Replaceable Teeth (2.13 cu ft)			X*	X
ACX2956900AC	Big Foot Stabilizer Pads		X		
ACX2956890AC	Stabilizer Rubber Street Pads		X		
72533129M	Big Foot Stabilizer Pads			X	X
72533154M	Stabilizer Rubber Street Pads			X	X
72533792AC	Mechanical Thumb Kit		X		
72533793M	Mechanical Thumb Kit			X	
72533794M	Mechanical Thumb Kit				X

*** Buckets can be mounted on the CB75, but please note that the teeth can contact the boom when curling in the bucket due to the larger capacity.**

MFBH3222 BACKHOE

MASSEY FERGUSON®

(F.O.B. PORT OF ENTRY)

FEATURES

- Curved Boom
- 4-Point Subframe Mount
- Easy to Remove Quick Attach Backhoe Frame
- 180 Degree Boom Swing with Rubber Cushion Stops
- Two-Lever Four Way Dig Control
- Twin Cylinder Boom Swing with Hydraulic Cushion
- Cast Iron Bucket Linkage
- Independent Hydraulically Controlled Stabilizers with Transport Locking Pins
- Adjustable Operator's Seat
- Recessed Grease Zerks
- Galvanized Positive Locking Pins
- For MF1800E and 1700E Tractor Models
- Bolt on Construction Grade Bucket Teeth
- Boom Lock For Transport
- Boom Float Control
- Max Reach: 127 inches
- Stabilizer Spread - Transport: 46.4 inches (1179.5 mm)
- Stabilizer Spread - Operating: 85 inches
- Angle of Departure: 19.7 Degrees
- Bucket Rotation: 185 Degrees
- Shipping Weight (Less Bucket): 968 lbs (439 kg)

MODEL	Digging Depth	Transport Height	Loading Height	Digging Force Using Bucket Cylinder	Digging Force Using Dipper Cylinder
1800E / 1700E	87 inches	85.1 inches	74.1 inches	3220 lb	2105 lb

NOTE:

- *Tractor must be equipped with a front-end loader for stable and satisfactory backhoe operation.*
- *Not intended for industrial use.*
- *Specifications will vary according to tractor and tire sizes used.*
- *Not for 3-Point Hitch*.

Order Code	Catalog Number	Description	Factory Code	Approx. Weight (lb.)	List Price
For a Complete Backhoe, Select One Order Code from Groups 01 - 03, and One Catalog Number from Group 04					
BASE MACHINE					**Group 01**
MFBH3222	72530677	MFBH3222 Backhoe with Control Valve.	05C5774	733	6,793.00
SUBFRAME MOUNTING KITS - REQUIRED					**Group 02**
	72530655M	Mounting Kit for MF1800E and MF1700E Tractors	65C925	351	1,089.00
HYDRAULICS - REQUIRED					**Group 03**
	72530657M	Hydraulic Hose Kit for MF1800E and MF1700E Model Tractors (Not Compatible with 2nd Spool Valve Kit)	15C237	9	279.00
BACKHOE BUCKETS					**Group 04**
	72530661M	9-inch Bucket with 3 Replaceable Teeth (.85 cu ft).	50C314	TBD	370.00
	72530662M	12-inch Bucket with 3 Replaceable Teeth (1.18 cu ft).	45C354	TBD	417.00
	72530663M	16-inch Bucket with 4 Replaceable Teeth (1.64 cu ft).	80C397	TBD	468.00

NOT FOR SALE IN QUEBEC

MFBH3222 BACKHOE

MASSEY FERGUSON®

Order Code	Catalog Number	Description	Factory Code	Approx. Weight (lb.)	List Price
ACCESSORIES					**Group 05**
	72530665M	Big Foot Stabilizer Pads	20C112	TBD	132.00
	72530666M	Stabilizer Rubber Street Pads	70C120	TBD	142.00
	72530667M	Mechanical Thumb Kit	15C424	TBD	499.00
MANUALS					**Group 06**
	72530690	Backhoe Package Manual - English Language			No Charge
	72530685	Backhoe Package Manual - French Language			No Charge

NOT FOR SALE IN QUEBEC

MFCB75 BACKHOE

MASSEY FERGUSON®

(F.O.B. TELFORD, TENNESSEE)

FEATURES

- Curved Boom
- 4-Point Subframe Mount
- Easy to Remove Quick Attach Backhoe Frame
- 170 Degree Boom Swing with Rubber Cushion Stops
- Two-Lever Four Way Dig Control
- Twin Cylinder Boom Swing with Hydraulic Cushion
- Cast Iron Bucket Linkage
- Independent Hydraulically Controlled Stabilizers with Transport Locking Pins
- Adjustable Operator's Seat
- Recessed Grease Zerks
- Galvanized Positive Locking Pins
- For MF1835M, 1840M, 1735M, 1740M 1736, and 1742 Tractor Models
- Bolt on Construction Grade Bucket Teeth
- Boom Lock For Transport
- Boom Float Control
- Max Reach: 119.7 inch (3.04 m)
- Stabilizer Spread - Transport: 48.4 inch (1.23 m)
- Stabilizer Spread - Operating: 99.2 inch (2.52 m)
- Angle of Departure: 18 Degrees
- Swing Arc: 170 Degrees
- Bucket Rotation: 174 Degrees
- Shipping Weight: 812 lbs (327 kg)

MODEL	Digging Depth	Transport Height	Loading Height	Digging Force Using Bucket Cylinder	Digging Force Using Dipper Cylinder
1835M/1840M 1735M/1740M 1736/1742	92 inches (2.34 m)	76.4 inches (1.94 m)	70 inches (1.78 m)	3148 lb (1428 kg)	2057 lb (933 kg)

NOTE:

- ***When installing CB75 Backhoe on Cab Tractor, the operator may experience limited head room due to cab roof design.***
- *Tractor must be equipped with a front-end loader for stable and satisfactory backhoe operation.*
- *Not intended for industrial use.*
- *Specifications will vary according to tractor and tire sizes used.*
- *Not for 3-Point Hitch use on compact tractor.*
- *Backhoe Mounts are not Compatible with Top and Tilt Kits.*
- *Backhoe must be removed to operate mid mount mower.*

Order Code	Catalog Number	Description	Factory Code	Approx. Weight (lb.)	List Price
For a Complete Backhoe, Select One Order Code from Group 01 and One Catalog Number Each from Group 02, 03 & 04					
BASE MACHINE					**Group 01**
MFCB75	72533772	MFCB75 Backhoe with Control Valve.	05C5774	733	6,793.00
SUBFRAME MOUNTING KITS					**Group 02**
	72533776M	Mounting Kit for CB75 on MF1835M/1840M, ... MF1735M/1740M, or MF1736/1742 Premium Model Tractors with MFFL2611 or MFDL125 Loader	15C1138	351	1,339.00
HYDRAULICS					**Group 03**
	72533191M	Power Beyond Kit to Connect CB75 to MF1835M/MF1840M, . MF1735M/MF1740M, or MF1736/MF1742 Premium Model Tractors with Factory Joystick	15C339	9	399.00

NOT FOR SALE IN QUEBEC

MFCB75 BACKHOE

MASSEY FERGUSON®

Order Code	Catalog Number	Description	Factory Code	Approx. Weight (lb.)	List Price
BACKHOE BUCKETS					**Group 04**
	72533783M	10-inch Bucket with 2 Replaceable Teeth (.57 cu ft)	50C314	56	370.00
	72533784M	12-inch Bucket with 3 Replaceable Teeth (.71 cu ft)	45C354	66	417.00
	72533785M	16-inch Bucket with 3 Replaceable Teeth (.95 cu ft)	80C397	75	468.00
ACCESSORIES					**Group 05**
	72533129M	Big Foot Stabilizer Pads (16mm Bolts)	20C112		132.00
	72533154M	Stabilizer Rubber Street Pads (16mm Bolts)	70C120	18	142.00
	72533793M	Mechanical Thumb Kit	15C424	36	499.00

NOT FOR SALE IN QUEBEC

MFCB85 BACKHOE

MASSEY FERGUSON®

(F.O.B. TELFORD, TENNESSEE)

FEATURES

- Curved Boom
- 4-Point Subframe Mount
- Easy to Remove Quick Attach Backhoe Frame
- 180 Degree Boom Swing with Rubber Cushion Stops
- Two-Lever Four Way Dig Control
- Twin Cylinder Boom Swing with Hydraulic Cushion
- Cast Iron Bucket Linkage
- Independent Hydraulically Controlled Stabilizers with Transport Locking Pins
- Adjustable Operator's Seat
- Recessed Grease Zerks
- Galvanized Positive Locking Pins
- Bolt on Construction Grade Bucket Teeth
- Boom Lock For Transport
- Boom Float Control
- For MF2850M-2860M, MF1750M-1760M, MF1754-1759, MF2800E and MF2700E Tractor Series
- Digging Depth: 101.6 inch (2.58 m)
- Max Reach: 130 inches (3.3 m)
- Transport Height: 85.4 inches (2.17 m)
- Stabilizer Spread - Transport: 56 inches (1.42 m)
- Stabilizer Spread - Operating: 119 inches (3.02 m)
- Loading Height: 74 inches (1.88 m)
- Angle of Departure: 20 Degrees
- Swing Arc: 170 Degrees
- Bucket Rotation: 180 Degrees
- Shipping Weight: 853 lbs (387 kg)
- Digging Force Using Bucket Cylinder: 3893 lb (1766 kg)
- Digging Force Using Dipper Cylinder: 2507 lb (1137 kg)

MODEL	Digging Depth	Transport Height	Loading Height	Digging Force Using Bucket Cylinder	Digging Force Using Dipper Cylinder
MF2850M/2855M/2860M 1750M/1755M/1760M 1749/1754/1758/1759 2800E/2700E	101.6 inches (2.58 m)	85.4 inches (2.17 m)	74 inches (1.88 m)	3893 lb (1766 kg)	2507 lb (1137 kg)

NOTE:

- ***Category 2 Implements not compatible when the backhoe subframe is installed (impacts these models: 2800E / 2700E / 1758/ 1759)***
- ***When installing CB85 Backhoe on Cab Tractor, the operator may experience limited head room due to cab roof design.***
- *Tractor must be equipped with a front-end loader for stable and satisfactory backhoe operation.*
- *Not intended for industrial use.*
- *Specifications will vary according to tractor and tire sizes used.*
- *Not for 3-Point Hitch use on compact tractor.*
- *Backhoe Mounts are not Compatible with Top and Tilt Kits.*

Order Code	Catalog Number	Description	Factory Code	Approx. Weight (lb.)	List Price
For a Complete Backhoe, Select One Order Code from Group 01 and One Catalog Number Each from Group 02, 03 & 04					
BASE MACHINE					**Group 01**
MFCB85	72533773	MFCB85 Backhoe with Control Valve.	45C6304	1183	7,417.00
SUBFRAME MOUNTING KITS					**Group 02**
	72533923M	Mounting Kit for CB85 on MF2850M, 2855M, 2860M HST, MF1750M, 1755M, 1760M HST Cab or MF1749,1754, and 1758 Premium Model Tractors with MFFL2814 or MFDL135 Loader; and MF2800E and MF2700E Model Tractors with MFFLx2815 or MFL135E Loader	65C1231		1,449.00
	72533924M	Mounting Kit for CB85 on MF2860M Mech, MF1760M Mech, or MF1759 Model Tractors with MFFL2814 or MFDL135 Loader	65C1231		1,449.00

NOT FOR SALE IN QUEBEC

MFCB85 BACKHOE

MASSEY FERGUSON®

Order Code	Catalog Number	Description	Factory Code	Approx. Weight (lb.)	List Price
HYDRAULICS					**Group 03**
	72533910M	Hydraulic Hose Kit to Connect CB85 to MF2800E or. . . . . 2700E Model Tractors	15C339		399.00
	72533191M	Power Beyond Kit to Connect CB85 to MF2850M/2855M/ . . 2860 HST; MF1750M/1755M/1760M HST Model Tractors or MF1749/1754/1758 Model Tractors with Factory Joystick or Pedestal Mounted Joystick	15C339	13	399.00
	72533192M	Power Beyond Kit to Connect CB85 to MF2860M Mech Model, . . MF1760M Mech Model Tractors or MF1759 Model Tractors with Factory Joystick or Pedestal Mounted Joystick	15C339	13	399.00
BACKHOE BUCKETS					**Group 04**
	72533786M	10-inch Bucket with 2 Replaceable Teeth (.81 cu ft)	65C364	71	429.00
	72533787M	12-inch Bucket with 3 Replaceable Teeth (1.02 cu ft).	15C390	81	459.00
	72533788M	16-inch Bucket with 3 Replaceable Teeth (1.38 cu ft).	15C441	94	519.00
	72533789M	18-inch Bucket with 3 Replaceable Teeth (1.57 cu ft).	65C483	100	569.00
	72533790M	24-inch Bucket with 4 Replaceable Teeth (2.13 cu ft).	65C653	120	769.00
ACCESSORIES					**Group 05**
	72533129M	Big Foot Stabilizer Pads (16mm Bolts)	20C112		132.00
	72533154M	Stabilizer Rubber Street Pads (16mm Bolts)	70C120	18	142.00
	72533794M	Mechanical Thumb Kit	65C704	36	829.00

FRONT MOUNTED

MASSEY FERGUSON®

FRONT MOUNTED APPLICATION CHART

TRACTOR MODEL	2340	2360	1410	1507	2330
	BLADE	SNOW BLOWER			ROTARY BROOM
GC1723E GC1725M GC1705 GC1715	X	X			X
GC1723EB GC1725MB GC1710 GC1720	X	X			X
1526H			X		
1835M, 1840M, 1735M, 1740M, 1736			X		
2850M,2855M, 2860M HST 1750M,1755M, 1760M HST, 1742				X	

MF2340 BLADE

MASSEY FERGUSON®

(F.O.B. Port of Entry)

FEATURES

- **MF2340 Blade (60 inches):**
- **Fits All GC Series Tractors**
- Quick Hitch System
- Overall Width 60 inches, Overall Height 19 inches
- Length with Female Hitch 23 inches
- Blade Thickness: 3/16 inch with Security Spring
- Reinforcement Braces Thickness: 1/4 inch
- Reversible Cutting Edge but Not Adjustable
- Cutting Edge Thickness: 1/2 inch
- Manual Angling 0-15-30
- Adjustable Skid Shoes
- Optional Hydraulic Angling (0 To 30 Degrees)
- Hydraulic Lift Mechanism Standard

Order Code	Catalog Number	Description	Factory Code	Approx. Weight (lb.)	List Price
For a Complete Blade, Select One Order Code from Group 01 and Catalog Number(s) from Group 02					
BASE MACHINE					**Group 01**
MF2340	8302003	MF2340 60-inch Heavy Duty Front Blade . . . . . **(Requires 8300103M)**	70C919	303	1,082.00
SUBFRAME					**Group 02**
	8300103M	Front Quick Hitch for GC1700 Series Tractors, ... Includes Male Hitch, Cylinder Hoses and Couplers	70C664	81	782.00
HYDRAULICS					**Group 03**
	8302205M	Hydraulic Angle Kit for HD 60-inch Blade	55C410	16	483.00
		See Compact Tractor Section for Hydraulic Valves			
		Note: Tractor must be equipped with hydraulic valve			
ACCESSORIES:					**Group 4**
	8302202	Rubber Cutting Edge for HD 60-inch Blade	95C226	50	267.00
	8302901	French Operator Manual for 60-inch Blade.			No Charge

MF2360 SNOW BLOWER

MASSEY FERGUSON®

(F.O.B. Port of Entry)

FEATURES

- Fits All GC Series Tractors
- Patented Quick Hitch System
- Overall Width: 50-3/16 inches; Overall Height w/o Chute: 20.5 inches
- Overall Length with Female Hitch: 30.5 inches (Approx.)
- Cutting Width: 50 inches / Cutting Height: 19-1/8 inches
- Clockwise Rotation
- Auger Drive: Worm Gear Box Ratio 5:1. Auger Diameter 12-7/8 inches
- Impeller Drive: No.40 Chain. Impeller Diameter 15-5/8 inches
- 2 Shear Bolts On Auger / 1 Shear Bolt And 3 Blades On Impeller
- Adjustable Deflector And Rear Skid Shoes
- Two Stage
- Chute Position: Left / Chute Rotation: Manual
- Frame Thickness: 14 Ga / Side Thickness: 11 Ga
- PTO Drive
- Lifting Mechanism - Hydraulic

Order Code	Catalog Number	Description	Factory Code	Approx. Weight (lb.)	List Price
For a Complete Snow Blower, Select One Order Code from Group 01 and Catalog Number(s) from Group 02 and 03					
BASE MACHINE					**Group 01**
MF2360	8300004	MF2360 50-inch Snow Blower Includes Female Hitch, Half Driveline, Chute, Manual Rotation and Reduction (**Requires Subframe and Mid PTO Driveline)** Note: Tractors with Soft Side Cab are not Compatible with Manual Rotation; Catalog # 8300202M Must be Ordered	90C2102	288	2,474.00
SUBFRAME					**Group 02**
	8300103M	Front Quick Hitch for GC1700 Series Tractors, Includes Male Hitch, Cylinder Hoses and Couplers	70C664	81	782.00
HYDRAULICS					**Group 03**
		See Compact Tractor Section for Hydraulic Valves *Note: Tractor must be equipped with hydraulic valve*			
MID PTO DRIVELINE					**Group 04**
	8300201M	Mid PTO Drive kit. Includes Mid PTO Driveline and Half Driveline for Implements and Hardware	30C542	19	638.00
ACCESSORIES:					
	8302206M	Hydraulic Chute Rotation Kit with 3/8 inch Couplers	85C629	8	741.00
	8300202M	Electric Chute Rotation Kit	70C375	8	442.00
	8300203M	Electric Chute Deflector Kit	10C498	8	586.00
	8300901	French Manual			No Charge

MF1410 SNOW BLOWER

MASSEY FERGUSON®

(F.O.B. Port of Entry)

FEATURES

- Patented Quick Hitch, Cat B
- Overall Width 63 inches
- Overall Height 53.125 inches
- Overall Height without Chute 23.8 inches
- Drive System: 1885 - 2000 RPM Gearbox In Oil
- Driveline Protection: Shear Bolt
- 14-inch Diameter Auger
- 4 Blade Blower Fan
- Hydraulic Lifting Mechanism
- Hydraulic Main Chute Left / Right
- Front Mount Fits: MF1526H, 1835M, 1840M, 1735M, 1740M and 1736
- **NOTES:**
  To Operate MF1410 Snow Blower, Tractor Must Be Equipped with Two Spool Valves or Auxiliary Joystick Valve.

  To Mount MF1410 to Tractor, the Subframe Mounting Kit and Mid PTO Driveline Must Be Ordered.

  Tractor Must be Equipped with Mid PTO. See current Compact Tractor price book - Parts Accessory Chart - for Requirements.

  To Connect and Operate Loader, Subframe Must be Removed

Order Code	Catalog Number	Description	Factory Code	Approx. Weight (lb.)	List Price
For a Complete Snow Blower, Select One Order Code from Group 01 and Order Codes from Group 02 and 03 as Required					
BASE MACHINE					**Group 01**
MF1410	72530257	MF1410 63-inch Snow Blower . . . . . Complete with Oilbath Gear Boxes, 4 Blade Fan, Skid Shoes, Half Driveline, Female Hitch, 2-Part Chute with High Torque Hydraulic Motor, Hoses, and Couplers, Operator Manual. (**Requires Subframe and Mid PTO Driveline)**	65C3560	547	4,189.00
SUBFRAME					**Group 02**
	ACX2926880M	Subframe for MF1835M/1840M and MF1735M/1740M . . . . (Not Compatible with R1 Tires)	65C1758		2,069.00
	72530364M	Subframe for MF1736 **(Subject To Availability)** . . . . . (Not Compatible with R1 Tires)	65C1741		2,049.00
	72530245M	Subframe Quick Hitch for MF1526H	80C1128	351	1,328.00
MID PTO DRIVELINE					
					Group 03
	7092207M	Mid PTO Driveline for MF1835M, MF1840M, ... MF1735M, MF1740M, and MF1736	55C699	37	823.00
	72530246M	Mid PTO Driveline for MF1526	35C655	21	771.00
ACCESSORIES:					
	72530259M	3 Part Chute for Blower.	15C305	40	359.00
	72530260M	Hydraulic Chute Deflector . . . . . (**Requires an Auxiliary Joystick Valve and 1 Spool Valve)**	15C288	14	339.00
	72530261M	Electric Chute Deflector	25C480	8	565.00
	8300204M	Side Extensions	55C087		103.00
	7092901	French Manual			No Charge
	7092903M	French Manual (Subframe).			No Charge

*** See Compact Tractor Section for Hydraulic Valves and Mid PTO kits**

MF1507 SNOW BLOWER

MASSEY FERGUSON®

(F.O.B. Port of Entry)

FEATURES

- Patented Quick Hitch, Cat BC
- Overall Width 74 inches
- Overall Height 27-1/2 inches
- Driveline Protection: Shear bolt
- Auger Diameter: 14-3/4 inches
- 4 Blade Blower Fan
- Lifting Mechanism: Hydraulic
- Hydraulic Main Chute Left / Right
- Replacement Cutting Edge and Ski Shoes
- 2 Part Chute Standard
- Front Mount To Fit: MF2850M, 2855M, 2860M HST, 1750M, 1755M, 1760M HST, 1742, 1749, 1754, 1758
- **NOTES:**
  To Operate MF1507 Snow Blower, Tractor Must Be Equipped with Two Spool Valves or Auxiliary Joystick Valve.

  Tractor Must be Equipped with Mid PTO. See current Compact Tractor price book - Parts Accessory Chart - for Requirements.

Order Code	Catalog Number	Description	Factory Code	Approx. Weight (lb.)	List Price
For a Complete Snow Blower, Select One Order Code from Group 01 and Order Codes from Group 02 and 03 as Required					
BASE MACHINE					**Group 01**
MF1507	72530258	MF1507 74-inch Snow Blower . . . . . (**Requires Subframe and Mid PTO Driveline)**	35C4735	586	5,571.00
SUBFRAME					**Group 02**
	ACX2926890M	Subframe for Models MF2850M, 2855M, and 2860M HST Only	65C2200		2,589.00
	72530552M	Subframe for Models MF1750M, 1755M, and 1760M HST Only	65C2200		2,589.00
	72530368M	Subframe for MF1742, 1749, 1754, and 1758 . . . . . **(Subject to Availability)**	40C2179		2,564.00
MID PTO DRIVELINE					**Group 03**
	7581102M	Mid PTO Driveline for MF2850M, 2855M, 2860M HST Only, MF1750M, 1755M, 1760M HST Only, MF1742, 1749, 1754, and 1758 . .	05C708	37	833.00
ACCESSORIES:					
	72530259M	3 Part Chute For Blower	15C305	40	359.00
	72530260M	Hydraulic Chute Deflector . . . . . (**Requires an Auxiliary Joystick Valve and 1 Spool Valve)**	15C288	14	339.00
	72530261M	Electric Chute Deflector	25C480	8	565.00
	8300205M	Side Extensions	55C087		103.00
	7581901	French Manual			No Charge
	7092904M	French Manual (Subframe)			No Charge

*** See Compact Tractor Section for Hydraulic Valves**

MF2330 ROTARY BROOM

MASSEY FERGUSON®

(F.O.B. Port of Entry)

FEATURES

- Fits All GC Series Tractors
- Patented Quick Hitch System
- Overall Width: 47-3/8 inches
- Height w/o Broom: 11-3/8 inches. Height with Broom: 18-3/8 inches
- Length with Female Hitch: 42 inches (Approx.)
- Broom Diameter: 18 inches. Broom Length: 43.25 inches
- Manual Angling, 0-12, 5-25 Degrees
- Working Width at Maximum Angle: 39-3/16 inches
- PTO Drive
- Reduction Ratio 2.78:1
- Broom Drive - No. 40 Chain
- Frame Thickness: 14 Ga
- Lift Mechanism - Hydraulic

Order Code	Catalog Number	Description	Factory Code	Approx. Weight (lb.)	List Price
For a Complete Rotary Broom, Select One Order Code from Group 01 and Catalog Number(s) from Group 02 and 03					
BASE MACHINE					**Group 01**
MF2330	8303003	MF2330 47-inch Rotary Broom. . . . . Includes Female Hitch, Half Driveline, Manual Angling, Polypropylene Brush and Parking Stands. **(Requires catalog # 8300103M and 8300201M)**	60C2495	310	2,936.00
SUBFRAME					**Group 02**
	8300103M	Front Quick Hitch for GC1700 Series Tractors, ... Includes Male Hitch, Cylinder Hoses and Couplers	70C664	81	782.00
HYDRAULICS					**Group 02**
	8302205M	Hydraulic Angle Kit with 3/8 inch Couplers	55C410	16	483.00
		See Compact Tractor Section for Hydraulic Valves *Note: Tractor must be equipped with hydraulic valve*			
MID PTO DRIVELINE					**Group 03**
	8300201M	Mid PTO Drive Kit. Includes Mid PTO . . . . . Driveline and Half Driveline for Implements and Hardware	30C542	19	638.00
ACCESSORIES:					
	8303202	Detaching Wheel Kit . . . . . (For use on S/N: RP252001 and up)	65C279	30	329.00
	8303901	French Operator Manual			No Charge

MASSEY FERGUSON®

RESERVED

MASSEY FERGUSON®

HARVEST

MASSEY FERGUSON TABLE OF CONTENTS

HEADERS

MF3300 Corn Head (Non-Chopping) 3

MF3300 Corn Head (Chopping) 4

MF4300 Pick-Up Head 5

MF9255 Dynaflex® Draper Head 6

MF9300 Dynaflex® Draper Head 9

MASSEY FERGUSON®

MF 3300 CORN HEAD (NON-CHOPPING)

STANDARD EQUIPMENT
F.O.B. Hesston, Kansas
Serial No. From AGCMXXXX0IHCH1101

- Individual Self-Contained Row Unit with Enclosed Gear Box Drive
- Low Profile Design, Adjustable Entry Angle
- Hydraulic Fore/Aft Pitch, 12 Degrees of in Cab Adjustment
- Hydraulic Accumulator Tilt Protection
- Adjustable Gathering Chain Guides
- Electric Adjustable Stripper Plates with Position Indicator
- Single Point Multi-Coupler Hydraulic/Electrical Connection
- Aggressive Point to Point Snapping Rolls with Replaceable Blades
- 20 in. (508 mm) Diameter and 30 in. (762 mm) Pitch Cross Auger
- Over Reaching Auger Geometry
- Robust Heavy Duty Frame
- Quick Hook-Up
- Cove Shaped Low Density Polyethylene Points, Snouts and Gatherers
- Optimized Gathering Chain to Stalk Roll Speed
- Ear Saving Gathering Chain Design
- Extremity Lights
- Reichhardt Row Guidance Ready
- Headsight Auto Header Height Control Ready
- Greaseless Idlers
- Conveyor Auger Hood
- Smooth Beveled Deck Plates

Order Code	Catalog Number	Description	Factory Code	Approx. Weight (lb.)	List Price

ONE ORDER CODE FROM EACH BOX MUST BE SPECIFIED (except as noted)

BASE MACHINE - REQUIRED

Non-Chopping					
30INCH	ACX248563B	MF3308 Header . . . . . 71C58768 (8 Row Non-Chopping Corn Head)		5625	76,323.00
30INCH	ACX248564B	MF3312 Header . . . . . 29C93614 (12 Row Non-Chopping Corn Head)		5625	121,577.00

FIELD INSTALLED MISCELLANEOUS

700962793M	Conversion Kit (Axial to Transverse) . . . . . 89C736 (Includes Feed Opening Filler Panels and Transverse Length Drive Shaft)	957.00
700962792M	Transverse to Axial Conversion. 89C736	957.00
700962393M	Ground Sensing - Headsight (Qty 4 Sensors) . . . . 44C1826 (Only Compatible with 12 Row Heads)	2,372.00
	Note: Replacement Sensor Extension Wands can be Sourced from AGCO Parts, Part Number 71486830	
700962392M	Ground Sensing - Headsight (Qty 2 Sensors) . . . . 72C874 (8 & 12 Row Heads can Accommodate 1 of Kit# 700962392G)	1,136.00
	Note: Replacement Sensor Extension Wands can be Sourced from AGCO Parts, Part Number 71486830	
700962366M	Snout Skids (8 Row) . . . . . 69C228 (Recommended in ALL Conditions on all Headers)	297.00
700962367M	Snout Skids (12 Row). . . . . 82C435 (Recommended in ALL Conditions on all Headers)	566.00
700962791M	Walk Platform. 90C284	370.00
700960732M	Reichhardt Row Guidance Completing Package . . . 36C976 (Contact Reichhardt for Installation Instructions on Combines other than the Gleaner S9)	1,268.00
700964492M	Stalk Stomper Kit (4 Rows) 72C1105	1,436.00
	Note: Suggested quantity of 2 Kits for 8 Row Heads and quantity of 3 Kits for 12 Row Heads	

PRESERVATIVE COATING

700963426M	Ship Safe Preservative Coating. . . . . 19C806 (Mandatory for Shipments November 15 - March 31)	1,047.00

MF 3300 CORN HEAD (CHOPPING)

MASSEY FERGUSON®

STANDARD EQUIPMENT
F.O.B. Hesston, Kansas
Serial No. From AGCMXXXX0IHCH1101

- Individual Self-Contained Row Unit with Enclosed Gear Box Drive
- Low Profile Design, Adjustable Entry Angle
- Hydraulic Fore/Aft Pitch, 12 Degrees of in Cab Adjustment
- Hydraulic Accumulator Tilt Protection
- Adjustable Gathering Chain Guides
- Electric Adjustable Stripper Plates with Position Indicator
- Single Point Multi-Coupler Hydraulic/Electrical Connection
- Aggressive Point to Point Snapping Rolls with Replaceable Blades
- 20 in. (508 mm) Diameter and 30 in. (762 mm) Pitch Cross Auger
- Over Reaching Auger Geometry
- Robust Heavy Duty Frame
- Quick Hook-Up
- Conveyor Auger Hood
- Cove Shaped Low Density Polyethylene Points, Snouts and Gatherers
- Optimized Gathering Chain to Stalk Roll Speed
- Ear Saving Gathering Chain Design
- Extremity Lights
- Reichhardt Row Guidance Ready
- Headsight Auto Header Height Control Ready
- Greaseless Idlers
- Smooth Beveled Deck Plates

- **Chopping Features**
- Lawn Mower Style Blades
- 2 Blades per Row Unit
- Reversible Chopper Blades
- Blade Position Optimized to Eliminate Head Loss When Chopping
- Individual Row Unit Choppers can be Disengaged
- Low Drive Power Requirements

Order Code	Catalog Number	Description	Factory Code	Approx. Weight (lb.)	List Price

ONE ORDER CODE FROM EACH BOX MUST BE SPECIFIED (except as noted)

BASE MACHINE - REQUIRED

Chopping					
30INCH	ACX248561B	MF3308C Header (8 Row Chopping Corn Head)	32C79245		102,916.00
30INCH	ACX248562B	MF3312C Header (12 Row Chopping Corn Head)	93C120588		156,609.00

FIELD INSTALLED MISCELLANEOUS

700962793M	Conversion Kit (Axial to Transverse) (Includes Feed Opening Filler Panels and Transverse Length Drive Shaft)	89C736	957.00
700962792M	Transverse to Axial Conversion	89C736	957.00
700962393M	Ground Sensing - Headsight (Qty 4 Sensors) (Only Compatible with 12 Row Heads)	44C1826	2,372.00
	Note: Replacement Sensor Extension Wands can be Sourced from AGCO Parts, Part Number 71486830		
700962392M	Ground Sensing - Headsight (Qty 2 Sensors) (8 & 12 Row Heads can Accommodate 1 of Kit# 700962392G)	72C874	1,136.00
	Note: Replacement Sensor Extension Wands can be Sourced from AGCO Parts, Part Number 71486830		
700962366M	Snout Skids (8 Row) (Recommended in ALL Conditions on all Headers)	69C228	297.00
700962367M	Snout Skids (12 Row) (Recommended in ALL Conditions on all Headers)	42C343	446.00
700962791M	Walk Platform	90C284	370.00
700960732M	Reichhardt Row Guidance Completing Package (Contact Reichhardt for Installation Instructions on Combines other than the Gleaner S9)	36C976	1,268.00
700960731M	Stalk Stomper Kit (4 Rows) Note: Suggested quantity of 2 Kits for 8 Row Heads and quantity of 3 Kits for 12 Row Heads	73C1038	1,349.00

PRESERVATIVE COATING

700963426M	Ship Safe Preservative Coating (Mandatory for Shipments November 15 - March 31)	19C806	1,047.00

MASSEY FERGUSON®

MF 4300 PICK-UP HEAD

STANDARD EQUIPMENT
F.O.B. REGINA, CANADA
Serial No. From AGCM4300G

Pick-up Head
- 24 in. (610 mm) Auger for High Capacity Feeding
- Heavy Duty, Fully Shielded Driveshaft with Built-In Clutch
- Single Point Multi-Coupler Hydraulic/Electrical Connection
- Auto Header Height Control

Pick-Up Attachment
- Swathmaster - Conventional Belt Pickup
- Large Front and Rear 26 in. (660 mm) Drapers Assures Smooth Feeding
- 18 x 8.50 Flotation Tires
- Front and Rear Drapers Driven Independently By 2 Hydraulic Drive Motors
- Tracking Groove Design On Drapers
- 5" Front and Rear Drum For Draper Rollers
- Draper Belt Connector Bars
- 4 Draper Belts

Order Code	Catalog Number	Description	Factory Code	Approx. Weight (lb)	List Price

ONE ORDER CODE FROM EACH BOX MUST BE SPECIFIED (except as noted)

MF 4300 PICK-UP HEADER - REQUIRED **BLOCK 01**

MF4300-15	71482752	15 ft. Pick-Up Head with 16 ft. Swathmaster	35C27069		35,155.00

FIELD INSTALLED ACCESSORIES (order as desired)

700963707M	Transverse Combine Completing Package (Field Conversion from Axial)	11C3498	4,543.00
71482760M	Hold Down Bars for Extreme Light Crops	97C970	1,261.00

SUBJECT TO AVAILABILITY

MF9255 DYNAFLEX® DRAPER HEAD

MASSEY FERGUSON®

STANDARD EQUIPMENT
F.O.B. Hesston, Kansas
Serial No. From AGCM92550HHD01101

- Header Frame Structure with Upper and Lower Tubes
- 12 Degree Header Tilt Hydraulic Adjust on Interface
- Feeder House Platform
- Flexible Cutterbar – Independent Dampened Tilt Arms Every 30”, Sectioned Float Pads
- 8 in. Hydraulic Cutterbar Flotation with Accumulator and Adjustment from Cab
- Heavy Duty Fly Wheel Sickle Drive
- Narrow Profile End Shields
- Dampened Sickle Drive PTO Shaft
- Synchronous Belt Drive for Auger and Center Draper
- V-guide on Center and Side Drapers for Consistent Tracking
- Mechanical Side and Center Draper Drives
- Rubberized Draper Canvas 41" Wide Moving at 502 ft/min (2.5 m/sec)
- Spring Loaded Side Draper Tension with Indicator and Extended Adjustment Range
- Updated End Skid Geometry Over 9250
- Single Height Skid Design
- Adjustable Height Parking Stands
- Central Canvas 48.5" Wide Moving at 572 ft/min (2.7 m/sec)
- 21” Auger Diameter, 46.3” Wide Rotating at 200 rpm
- Auger Flighting Filler (in box)
- Stainless Steel Auger Pan
- Forward Auger Position
- Clutch Protection for Center Draper and Auger
- Stainless Steel Front Belt Guards
- Hydraulic Variable Speed Reel Drive with Pressure Relief Valve
- Electric Reel Fore/Aft Adjustable from Cab
- Single Point Hook Up
- Plastic Dividers and End Shields
- Quick Attach Shields
- Auto Header Control System
- Long Divider Rod
- Adjustable Tine Pitch

***Note: The combine has to be equipped with lateral tilt and additional hydraulic outlet.**

Order Code	Catalog Number	Description	Factory Code	Approx. Weight (lb.)	List Price
ONE ORDER CODE FROM EACH BOX MUST BE SPECIFIED (except as noted)					
BASE MACHINE - REQUIRED					**BLOCK 01**
MF9255-25	ACW6778240	25 ft (7.6m)	38C62288		80,894.00
MF9255-30	ACW6778250	30 ft. (9.1m)	95C70481		91,535.00
MF9255-35	ACW6778260	35 ft. (10.6m)	18C74023		96,134.00
MF9255-40	ACW6778270	40 ft. (12.1m)	94C80943		105,122.00
REEL - REQUIRED					**BLOCK 15**
H706	71481525	Heavy Duty Single Piece Reel 25 ft.			No Charge
	71481524	Heavy Duty Single Piece Reel 30 ft.			No Charge
	71481523	Heavy Duty Single Piece Reel 35 ft.			No Charge
	71481522	Heavy Duty Single Piece Reel 40 ft.			No Charge
H704	71483577	Remove Reel	(04C2427)		(3,152.00)
DIVIDER - REQUIRED					
	700962401M	Long Row Rod Divider Kit			In Base
	700962402M	Reel/Rod End Divider Kit.	83C291		379.00
AHHC DRAG RODS - OPTIONAL					**BLOCK 35**
C503	71424616	AHHC Drag Rods	71C402		523.00

SUBJECT TO AVAILABILITY

SKID SHOE CONFIGURATION -- REQUIRED — BLOCK 25

Order Code	Catalog Number	Description	Factory Code	List Price
		25 ft.		
		25 ft.		
H903	H1222525	Standard Skid Shoes with Plastic End Skids		In Base
H905	H1222425	Standard Skid Shoes with Stainless Steel End Skids	93C160	209.00
H906	H1222725	Low Skid Shoes with Plastic End Skids	45C219	285.00
H907	H1222625	Low Skid Shoes with Stainless Steel End Skids	38C380	494.00
		30 ft.		
H903	H1222530	Standard Skid Shoes with Plastic End Skids		In Base
H905	H1222430	Standard Skid Shoes with Stainless Steel End Skids	87C177	231.00
H906	H1222730	Low Skid Shoes with Plastic End Skids	01C241	313.00
H907	H1222630	Low Skid Shoes with Stainless Steel End Skids	88C418	544.00
		35 ft.		
H903	H1222535	Standard Skid Shoes with Plastic End Skids		In Base
H905	H1222435	Standard Skid Shoes with Stainless Steel End Skids	81C194	253.00
H906	H1222735	Low Skid Shoes with Plastic End Skids	65C265	345.00
H907	H1222635	Low Skid Shoes with Stainless Steel End Skids	46C460	598.00
		40 ft.		
H903	H1222540	Standard Skid Shoes with Plastic End Skids		In Base
H905	H1222440	Standard Skid Shoes with Stainless Steel End Skids	06C214	278.00
H906	H1222740	Low Skid Shoes with Plastic End Skids	83C291	379.00
H907	H1222640	Low Skid Shoes with Stainless Steel End Skids	66C506	658.00

SICKLE - REQUIRED — BLOCK 05

Order Code	Catalog Number	Description	Factory Code	List Price
		25 ft.		
H508	71424607	AGCO Row Crop		In Base
H503	71420433	AGCO Small Grain		No Charge
H509	71420437	SCH Row Crop	61C456	593.00
H506	71421059	SCH Small Grain	61C456	593.00
		30 ft.		
H508	71424606	AGCO Row Crop		In Base
H503	71420432	AGCO Small Grain		No Charge
H509	71420436	SCH Row Crop	70C546	710.00
H506	71421058	SCH Small Grain	70C546	710.00
		35 ft.		
H508	71424605	AGCO Row Crop		In Base
H503	71420431	AGCO Small Grain		No Charge
H509	71420435	SCH Row Crop	33C638	829.00
H506	71421057	SCH Small Grain	33C638	829.00
		40 ft.		
H508	71423628	AGCO Row Crop		In Base
H503	71420442	AGCO Small Grain		No Charge
H509	71420443	SCH Row Crop	19C729	947.00
H506	71421056	SCH Small Grain	19C729	947.00

SUBJECT TO AVAILABILITY

MF9255 DYNAFLEX® DRAPER HEAD

MASSEY FERGUSON®

Order Code	Catalog Number	Description	Factory Code	Approx. Weight (lb)	List Price
SPARE SICKLE - OPTIONAL					**BLOCK 45**
		25 ft.			
H601	71424594	AGCO Row Crop	97C662		861.00
H602	71424589	AGCO Small Grain	97C662		861.00
H603	71424604	SCH Row Crop	97C662		861.00
H604	71424599	SCH Small Grain	97C662		861.00
		30 ft.			
H601	71424593	AGCO Row Crop	79C790		1,027.00
H602	71424588	AGCO Small Grain	79C790		1,027.00
H603	71424603	SCH Row Crop	79C790		1,027.00
H604	71424598	SCH Small Grain	79C790		1,027.00
		35 ft.			
H601	71424592	AGCO Row Crop	07C917		1,191.00
H602	71424587	AGCO Small Grain	07C917		1,191.00
H603	71424602	SCH Row Crop 35	07C917		1,191.00
H604	71424597	SCH Small Grain	07C917		1,191.00
		40 ft.			
H601	71424591	AGCO Row Crop	58C1042		1,354.00
H602	71424586	AGCO Small Grain	58C1042		1,354.00
H603	71424601	SCH Row Crop	58C1042		1,354.00
H604	71424596	SCH Small Grain	58C1042		1,354.00

FIELD INSTALLED ACCESSORIES (order as desired)

700958053M	Reel Speed Increase Kit	48C172	224.00
700963426M	Ship Safe Preservative Coating (Mandatory for Shipments November 15 - March 31)	19C806	1,047.00
700956337M	Axial to Transverse Conversion (Axial Header Adapter to Install on Transverse Combine) (Includes Feed Opening Filler Panels and Transverse Drive Shafts)	89C736	957.00
700957015M	Transverse to Axial Conversion (Transverse Header Adapter to Install on Axial Combine) (Includes Axial Length Drive Shafts)	89C736	957.00
700956893M	Slow Speed Transport Kit (25' to 40' headers)	80C5112	6,640.00
700962402M	Reel Arm and Divider Rods	83C291	379.00
ACW1491030M	Stainless Steel End Skids	20C123	160.00

SUBJECT TO AVAILABILITY

MASSEY FERGUSON®

MF9300 DYNAFLEX™ DRAPER HEAD

STANDARD EQUIPMENT

F.O.B. Hesston, Kansas

Serial No. From AGCR2550HHD01101

- Header Frame Structure with Upper and Lower Tubes
- Feeder House Platform
- Flexible Cutterbar – Independent Dampened Tilt Arms Every 30”, Sectioned Float Pads
- 8 in. Hydraulic Cutterbar Flotation with Accumulator and Adjustment from Cab
- 5 Degree Wedge Incorporated into Cutterbar Design
- Heavy Duty Fly Wheel Sickle Drive
- Narrow Profile End Shields
- Dampened Sickle Drive PTO Shaft
- Synchronous Belt Drive for Auger and Center Draper
- V-guide on Center and Side Drapers for Consistent Tracking
- Mechanical Side and Center Draper Drives
- Rubberized Draper Canvas 41" Wide Moving at 502 ft/min (2.5 m/sec)
- Spring Loaded Side Draper Tension with Indicator and Extended Adjustment Range
- Updated End Skid Geometry over 9255
- Adjustable Height Parking Stands
- Central Canvas 48.5" Wide Moving at 572 ft/min (2.7 m/sec)
- 21” Auger Diameter, 46.3” Wide Rotating at 200 RPM
- Auger Flighting Filler (in box)
- Stainless Steel Auger Pan
- Forward Auger Position
- Clutch Protection for Center Draper and Auger
- Stainless Steel Front Belt Guards
- Hydraulic Variable Speed Reel Drive with Pressure Relief Valve
- Electric Reel Fore/Aft Adjustable from Cab
- Single Point Hook Up
- Plastic Dividers and End Shields
- Quick Attach Shields
- Auto Header Control System
- Adjustable Tine Pitch
- Long Divider Rod
- Heavy Duty, Hesston Design Reel
- Twin accumulators for cutterbar floatation
- Updated tensioner tool over 9255
- New end shield styling and design over 9255
- Tool-less divider point removal
- Added float cylinder covers
- Enclosed top plumbing covers

**Note: The combine has to be equipped with lateral tilt and additional hydraulic outlet.*

Order Code	Catalog Number	Description	Factory Code	Approx. Weight (lb)	List Price

ONE ORDER CODE FROM EACH REQUIRED GROUP MUST BE SPECIFIED (except as noted)

BASE MACHINE - REQUIRED **BLOCK 01**

MF9325	H14MF2225	25 ft. (9.1m)	08C66685	86,604.00
MF9330	H14MF2230	30 ft. (9.1m)	18C75486	98,034.00
MF9335	H14MF2235	35 ft. (10.6m)	20C79279	102,960.00
MF9340	H14MF2240	40 ft. (12.1m)	45C86690	112,585.00

PITCH - REQUIRED **BLOCK 30**

HB01	H1452001	Hydraulic Pitch	25C866	1,125.00

INTERFACE **BLOCK 20**

A102	H1480325	Completing Package for 25 ft	In Base
A102	H1480330	Completing Package for 30 ft	In Base
A102	H1480335	Completing Package for 35 ft	In Base
A102	H1480340	Completing Package for 40 ft	In Base

MF9300 DYNAFLEX™ DRAPER HEAD

MASSEY FERGUSON®

Order Code	Catalog Number	Description	Factory Code	Approx. Weight (lb)	List Price
SKID SHOE CONFIGURATION -- REQUIRED					**BLOCK 25**
		25 ft.			
H903	H1422525	Standard Skid Shoes with Plastic End Skids			In Base
H905	H1422425	Standard Skid Shoes with Stainless Steel End Skids	87C177		231.00
H906	H1422725	Low Skid Shoes with Plastic End Skids	01C241		313.00
H907	H1422625	Low Skid Shoes with Stainless Steel End Skids	88C418		544.00
		30 ft.			
H903	H1422530	Standard Skid Shoes with Plastic End Skids			In Base
H905	H1422430	Standard Skid Shoes with Stainless Steel End Skids	87C177		231.00
H906	H1422730	Low Skid Shoes with Plastic End Skids	01C241		313.00
H907	H1422630	Low Skid Shoes with Stainless Steel End Skids	88C418		544.00
		35 ft.			
H903	H1422535	Standard Skid Shoes with Plastic End Skids			In Base
H905	H1422435	Standard Skid Shoes with Stainless Steel End Skids	81C194		253.00
H906	H1422735	Low Skid Shoes with Plastic End Skids	65C265		345.00
H907	H1422635	Low Skid Shoes with Stainless Steel End Skids	70C469		610.00
		40 ft.			
H903	H1422540	Standard Skid Shoes with Plastic End Skids			In Base
H905	H1422440	Standard Skid Shoes with Stainless Steel End Skids	06C214		278.00
H906	H1422740	Low Skid Shoes with Plastic End Skids	83C291		379.00
H907	H1422640	Low Skid Shoes with Stainless Steel End Skids	66C506		658.00
DRIVE					**BLOCK 37**
		25 ft.			
C701	H1448025	Standard Drive			In Base
C702	H1448125	Variable Speed Drive	39C2546		3,307.00
		30 ft.			
C701	H1448030	Standard Drive			In Base
C702	H1448130	Variable Speed Drive	39C2546		3,307.00
		35 ft.			
C701	H1448035	Standard Drive			In Base
C702	H1448135	Variable Speed Drive	39C2546		3,307.00
		40 ft.			
C701	H1448040	Standard Drive			In Base
C702	H1448140	Variable Speed Drive	39C2546		3,307.00
CANOLA PACKAGE					**BLOCK 43**
DV01	H1475230	Top Auger, 30 ft.	44C3828		4,972.00
DV01	H1475235	Top Auger, 35 ft.	21C4214		5,473.00
DV01	H1475240	Top Auger, 40 ft.	53C4611		5,989.00
DV01	H1475245	Top Auger, 45 ft.	45C4993		6,485.00
DV01	H1475250	Top Auger, 50 ft.	73C5504		7,149.00
SEALING DRAPER					**BLOCK 33**
		Without Sealing Draper			In Base
DC01	H1475301	Sealing Draper, Standard Skids	53C222		289.00
DC02	H1475401	Sealing Draper, Low Skids	53C222		289.00
AUGER					**BLOCK 12**
1H03	H1425001	Auger			In Base
1H04	H1425101	Fingered Auger	63C2016		2,619.00

MF9300 DYNAFLEX™ DRAPER HEAD

SICKLE - REQUIRED — BLOCK 05

Order Code	Catalog Number	Description	Factory Code	Approx. Weight (lb)	List Price
		25 ft.			
H508	H1461025	AGCO Row Crop			In Base
H503	H1461225	AGCO Small Grain			No Charge
H509	H1463025	SCH Row Crop	93C468		609.00
H506	H1463225	SCH Small Grain	93C468		609.00
		30 ft.			
H508	H1461030	AGCO Row Crop			In Base
H503	H1461230	AGCO Small Grain			No Charge
H509	H1463030	SCH Row Crop	48C557		724.00
H506	H1463230	SCH Small Grain	48C557		724.00
		35 ft.			
H508	H1461035	AGCO Row Crop			In Base
H503	H1461235	AGCO Small Grain			No Charge
H509	H1463035	SCH Row Crop	42C651		846.00
H506	H1463235	SCH Small Grain	42C651		846.00
		40 ft.			
H508	H1461040	AGCO Row Crop			In Base
H503	H1461240	AGCO Small Grain			No Charge
H509	H1463040	SCH Row Crop	82C743		966.00
H506	H1463240	SCH Small Grain	82C743		966.00

SPARE SICKLE - OPTIONAL — BLOCK 45

		25 ft.			
H601	H1461125	AGCO Row Crop	37C678		881.00
H602	H1461325	AGCO Small Grain	37C678		881.00
H603	H1463125	SCH Row Crop	37C678		881.00
H604	H1463325	SCH Small Grain	37C678		881.00
		30 ft.			
H601	H1461130	AGCO Row Crop	96C806		1,048.00
H602	H1461330	AGCO Small Grain	96C806		1,048.00
H603	H1463130	SCH Row Crop	96C806		1,048.00
H604	H1463330	SCH Small Grain	96C806		1,048.00
		35 ft.			
H601	H1461135	AGCO Row Crop	55C935		1,215.00
H602	H1461335	AGCO Small Grain	55C935		1,215.00
H603	H1463135	SCH Row Crop 35	55C935		1,215.00
H604	H1463335	SCH Small Grain	55C935		1,215.00
		40 ft.			
H601	H1461140	AGCO Row Crop	37C1063		1,381.00
H602	H1461340	AGCO Small Grain	37C1063		1,381.00
H603	H1463140	SCH Row Crop	37C1063		1,381.00
H604	H1463340	SCH Small Grain	37C1063		1,381.00

MF9300 DYNAFLEX™ DRAPER HEAD

MASSEY FERGUSON®

Order Code	Catalog Number	Description	Factory Code	Approx. Weight (lb)	List Price
FIELD INSTALLED ACCESSORIES (order as desired)					
	ACW2379500M	Completing Package Conversion Axial to Gleaner	90C1054		1,370.00
	ACW2379510M	Completing Package Conversion Axial to IDEAL	45C1528		1,985.00
	ACW2379520M	Completing Package Conversion IDEAL to Axial	45C1528		1,985.00
	ACW5467710M	AGCO Drag Rod Sensor Kit	14C525		682.00
	ACW5463690M	Headsight Drag Rod	92C3076		3,996.00
	ACW5795470M	DynaFlex Transport kit - includes wheels and frame	23C7083		9,199.00
	ACW7467060M	Gauge Wheel Mount and Stabilizer Arm (Requires Standard Gauge Wheels ACW7467070M)	75C2136		2,775.00
	ACW7467070M	Stabilizer Wheels, Standard Duty	71C556		723.00
	ACW5488660M	Stabilizer Wheels, Heavy Duty	98C518		674.00
	ACX2742240M	Top Auger, 25 ft.	05C3823		4,965.00
	ACX2742250M	Top Auger, 30 ft.	44C4213		5,472.00
	ACX2742260M	Top Auger, 35 ft.	22C4609		5,986.00
	ACX2742270M	Top Auger, 40 ft.	71C4945		6,423.00
	ACX2742360M	Back Sheet Extensions, 25 ft	75C750		975.00
	ACX2742790M	Back Sheet Extensions, 30 ft	36C822		1,068.00
	ACX2742800M	Back Sheet Extensions, 35 ft	98C903		1,174.00
	ACX2742810M	Back Sheet Extensions, 40 ft	84C994		1,292.00
	ACX2890680M	Center Feeder Drum with Steel Fingers	12C2199		2,856.00
	ACX2742350M	Center draper belt sealing kit, Standard Skids (Recommended for Canola, Soybeans)	26C260		338.00
	ACX2841640M	Center draper belt sealing kit, Low Skids (Recommended for Canola, Soybeans)	26C260		338.00
ACW5478950M		Hydraulic Pitch Kit	64C1256		1,632.00

Note: If converting Fendt IDEAL head to Gleaner, ACW2379500G (Conversion Axial to Gleaner) and ACW2379510F (Conversion Axial to IDEAL) are both required to complete conversion

HESSTON
by MASSEY FERGUSON

HAY EQUIPMENT

TABLE OF CONTENTS

PAGE

Warranty 4

Self Propelled Windrowers 5
- WR9900 Series Self Propelled Windrower Product Information . . . 6
- WR9980 Self Propelled Windrower . . . 7
- WR9970 Self Propelled Windrower . . . 10
- WR9960 Self Propelled Windrower . . . 13
- WR9950 Self Propelled Windrower . . . 16

Headers 19
- 9316D TwinMax™ Rotary Header . . . 20
- 9316S Rotary Header . . . 21
- 9313D TwinMax™ Rotary Header . . . 22
- 9313S Rotary Header . . . 23
- 5400 Center Delivery & Shiftable Draper Headers . . . 24

Mowers 27
- Disc Mower and Conditioner Product Information . . . 28
- 1316S Disc Mower Conditioner . . . 29
- 1393 Disc Mower Conditioner . . . 30
- 1376 Disc Mower Conditioner . . . 31
- 1373 Disc Mower Conditioner . . . 32
- 1359 Disc Mower Conditioner . . . 33

- Front and Rear Mower Conditioner Product Information . . . 34
- DM9314 Disc Mower Conditioner - Subject to Availability . . . 35
- DM9614TL Disc Mower Conditioner . . . 36
- DM8312 Disc Mower Conditioner . . . 37
- DM316FQ / DM367FQ Disc Mower Conditioner . . . 38

- Farmer and Professional Disc Mower Product Information . . . 39
- DM357 / DM306 / DM255 Professional Series Disc Mower . . . 38
- DM287 / DM246 / DM205 / DM164 Farmer Series Disc Mower . . . 41

Rakes and Tedders 43
- V Wheel Rakes - 1512 / 1512S / 1510 / 1510S / 1508 . . . 44
- Hi-Capacity Bi-Fold Wheel Rakes - 3986 / 3983 . . . 45
- RK Series Rotary Rakes - RK662 / RK451T / RK361 . . . 46
- RK Series Rotary Rakes - RK1002T / RK842 SD TR PRO / RK802 PRO / RK772 . . . 47
- TD Series Hi-Capacity Tedders TD776XDN / TD1028XTRC / TD1310XTRC . . . 48
- TD Series Hi- Capacity Tedders - TD1310 / TD1310 . . . 49
- TD Series Hi- Capacity Tedders - TD776T / TD524T / TD252 . . . 50

HESSTON by MASSEY FERGUSON

TABLE OF CONTENTS

PAGE

Round Balers **51**
- Round Baler Product Information . . . 52
- RB4160V Silage Cutter Baler . . . 53
- RB4180V Silage Cutter Baler . . . 53
- RB4160P Protec Combination Baler Wrapper . . . 54
- 2956A Round Baler . . . 55
- 2956 Round Baler . . . 57
- 2946A Round Baler . . . 59
- 2946 Round Baler . . . 61
- 1745D Round Baler . . . 63
- AGCO Hay Preservative and Application Equipment . . . 85

Bale Wrappers **65**
- TW130 / TW160 Bale Wrappers . . . 66

Small / Medium Rectangular Balers **67**
- Small / Medium Rectangular Baler Product Information . . . 68
- 1844S Medium Rectangular Baler . . . 69
- 1842 Medium Rectangular Baler . . . 70
- 1840 Small Rectangular Baler . . . 71
- 1838 Small Rectangular Baler . . . 72
- AGCO Hay Preservative and Application Equipment . . . 85

Large Rectangular Balers **73**
- Large Rectangular Baler Product Information . . . 74
- 2290 Large Rectangular Baler . . . 75
- 2270XD Large Rectangular Baler . . . 77
- 2270 Large Rectangular Baler . . . 79
- 2250 Large Rectangular Baler . . . 81
- AC25 Bale Accumulator for 2290, 2270 and 2270XD . . . 83
- AC20 Bale Accumulator for 2250 . . . 84
- AGCO Hay Preservative and Application Equipment . . . 85

Referral Attachments **89**

HESSTON by MASSEY FERGUSON

NEW FARM EQUIPMENT WARRANTY

Product	Warranty Terms
Hay and Forage	**Basic Warranty** : 12 Months, Hours Unlimited
Round Balers	**Basic Warranty :** 24 Months, Hours Unlimited
SP Windrowers	**Engine Warranty:**
	AGCO Power™ - 2 years or 2000 Hours
SP Windrower Headers	**Auger, Disc and Draper Header Warranty:** 1 year, Hours Unlimited
Coverage: Parts and labor at servicing dealer locations	

Product	Warranty Terms
All Disc Headers, Mowers and Mower Conditioners	**RazorGuard Warranty :** 3 years, Hours Unlimited, Parts Only Items covered: Module Casting, Idler Bearings & Idler Gears, Gear Spindles & Assembly, Spindle Bearings, Seals

HESSTON
by MASSEY FERGUSON

SELF-PROPELLED WINDROWERS

9900 SERIES SELF-PROPELLED WINDROWER

FOB Hesston, KS

PRODUCT INFORMATION

TRACTOR	WR9980	WR9970	WR9960	WR9950
Rated Horsepower Maximum Horsepower	265 (198 KW) 282 (221 KW)	235 (175 KW) 250 (186 KW)	197 (147 KW) 208 (155 KW)	160 (119 KW) 173 (129 KW)
Header Option	All	All	All	13' Disc Header Draper Header Auger Header
Drive Tires (STD) Tread	23.1R26 Turf Radial 23.1 x 26 Turf 620/75R26 Bar	23.1R26 Turf Radial 23.1 x 26 Turf 620/75R26 Bar	23.1R26 Turf Radial 23.1 x 26 Turf 620/75R26 Bar	23.1 x 26 Turf 23.1R26 Turf 620/75R26 Bar
Fuel Capacity	130 Gal (492 L)	130 Gal (492 L)	130 Gal (492 L)	130 Gal (492 L)
Cab	Deluxe Vision Cab	Deluxe Vision Cab	Deluxe Vision Cab	Deluxe Vision Cab
HEADER				
Drive	Hydraulic	Hydraulic	Hydraulic	Hydraulic
Flotation	Hydraulic	Hydraulic	Hydraulic	Hydraulic
HEADER APPLICATIONS				
Hay Headers:				
9313S Disc (13 ft)	X	X	X	X
9313D TwinMax™ Disc (13 ft)	X	X	X	X
9316S Disc (16 ft)	X	X	X	
9316D TwinMax™ Disc (16 ft)	X	X		
Draper Headers:				
5400 Center Delivery (20', 25', 30', 35', 40')	X	X	X	X
5400 Shiftable (25', 30', 35', 40')	X	X	X	X

NOTE: This is a general sales guide; for further product details and official specifications refer to product information guides and product literature.

HESSTON by MASSEY FERGUSON

WR9980 SELF-PROPELLED WINDROWER

FOB Hesston, KS

STANDARD EQUIPMENT

AGCO Power™ Turbo-Charged and Intercooled Diesel 7.4 CTA
SCR Emission Control System
7.4 Liter 6 Cylinder Engine
  Rated Horsepower: 265 at 2100 RPM
  Maximum Horsepower: 282 at 1950 RPM
Variable Speed Ground Drive Motors
Electronically Actuated Parking Lock
Electronic Header Engage/ Disengage with Reverser
Tandem Header Drive Pumps - Dual Header Hydraulic Hookups
Automatic Header Safety Lock
Hydraulic Header Tilt
Massey Ferguson Guide Ready
Massey Ferguson Connect
Precision Auto Guide Ready
Electro-Hydraulic Steering
Adjustable Steering Sensitivity
Adjustable Rear Axle Casters
GlideRider™ Suspended Rear Axle
Disc Header Receivers
22 mph High Speed Ground Drive
V-Cool™ Hydraulic Auto-Cleaning and Cooling Package
Ground Level Maintenance
12-Volt Electrical System
130 Gallon Fuel Tank
Integrated Horn

Deluxe Vision Cab
  Enhanced Interior and Exterior Styling
  OptiRide™ Four-Post Coil over Shock Suspension
  130 Cubic Feet of Interior Cab Volume
  77 sq. ft. of Glass Area
  33 sq. ft. of Curved Windshield Glass
  Large Entry/ Egress Door
  In Cab Foot Pegs
  Cab Exterior Access Steps
  Programmable FNR Handle -16 Fingertip Controlled Functions
  Automatic Climate Control
  Cloth Seat, no Ventilation or Heating
  Tinted Rear Window
  Integrated Datatronic 5 Color Touch Screen Monitor
  Large External Remote Adjusted Rear View Mirrors
  Tilt and Telescoping Adjustable Steering Column
  B Pillar Mounted Ignition Switch
  Large Instructor Seat- Foldable Work Station
  Pull Down Sunshade
  Multiple Storage Compartments
  AM / FM, USB, Satellite & Bluetooth Compatible
  Dual Beacon Lights
  Windshield Wiper / Washer

WR9900 WINDROWERS ARE ONLY COMPATIBLE WITH 9300, 9200 & 5400 SERIES HEADERS

Order Code	Catalog Number	Description	Factory Code	Approx. Weight(lb)	List Price
ONE ITEM FROM EACH GROUP MUST BE SPECIFIED UNLESS NOTED OTHERWISE					
BASE MACHINE					**GROUP 01**
MFWR9980	ACX2468400	WR9980 Self Propelled Windrower	M13301673		172,749.00
UPGRADE PACKAGE					**GROUP 02**
	MKT0370	Premium Grain Package Includes: Reel Fore/Aft Rear End Counterbalance Weight Quick Connect Coupler- Single Point (Required for 5400 Headers) Adapter Kit Draper/Auger Header Planetary Shields LED Light Package	M468699		6,087.00
STEERING					**GROUP 03**
50-D023	700965068	High Speed Transport, Standard Steering - 22 MPH			**In Base**
50-D024	ACX3131760	RearSteer High Speed Transport - 24.5 MPH	M477015		6,195.00
CAB MOUNTING					**GROUP 04**
20-UC05	700963936	Coil Spring Suspension			**In Base**
20-UC06	700963935	Air Suspension with Compressor	M318934		4,142.00
SEAT					**GROUP 05**
35-AE10	700965074	Seat-Standard - Cloth, no Ventilation or Heating			**In Base**
35-AE13	700965075	Seat-Deluxe - Leather, with Ventilation and Heating	M254870		3,310.00
LIGHTS					**GROUP 06**
125-VL05	700963356	Standard Lights			**In Base**
125-VL04	700963357	LED Lights	M163856		2,128.00
REAR HITCH					**GROUP 07**
80-S702	700961638	Pivoting Hitch(Available w/ Rear Wheel Steer option only)	M101255		1,315.00
80-S701	700959624	Rear Hitch for Rollers	M11473		149.00
QUICK COUPLERS					**GROUP 08**
60-GC01	700963389	Less Quick Couplers			**In Base**
60-GC03	700963388	Quick Connect Coupler- Single Point (Required for 5400 Headers - Adaptable for Rotary and Sickle Headers)	M83391		1,083.00

Dealers are Required to have EDT Tool Before ordering WR Windrowers.

WR9980 SELF-PROPELLED WINDROWER

Order Code	Catalog Number	Description	Factory Code	Approx. Weight(lb)	List Price
TIRE OPTIONS					**GROUP 09**
75-S116	ACX2796420	23.1 x 26 Bias Turf Tires (Goodyear) w/ 16.5L x 16.1 Rear	M575421		7,473.00
75-S117	ACX2796450	23.1R26 Turf Radial Tires (Goodyear) w/ 16.5L x 16.1 Rear	M732578		9,514.00
75-S120	ACX2796470	620/75R26 Turf Radial Tire (Alliance) Deep Lug with 16.5L x 16.1 Rear	M534765		6,945.00
75-S119	ACX2796490	620/75R26 Radial Bar (Alliance) with 16.5L x 16.1 Rear	M734426		9,538.00
75-S118	ACX2796520	620/75R26 Radial Bar (Michelin) with 16.5L x 16.1 Rear	M823746		10,698.00
RADIO					**GROUP 10**
30-A506	700963919	Deluxe Radio			**In Base**
30-A501	700963920	Less Radio	(M08470)		(110.00)
FACTORY INSTALLED TELEMETRY					**GROUP 11**
65- TE04	ACX2468500	Massey Ferguson Connect Mid-Spec Package Verizon/GSM Capabilities Includes 5 year Subscription – Dealer Activation Required			**In Base**
65-TE05	ACX2468510	Massey Ferguson Connect High-Spec Package Verizon/GSM/Iridium Capabilities Includes 5 year Subscription – Dealer Activation Required	M136367		1,771.00
FACTORY INSTALLED MASSEY FERGUSON GUIDE					**GROUP 12**
70-XR23	ACX2468360	Massey Ferguson Guide Standard (GSM) Trimble® AG-482 Receiver Pass-to-Pass Accuracy of +/- 20 cm (+/- 8 inch) For correction signal WAAS (no subscription needed)	M273350		3,550.00
70-XR24	ACX2468470	Massey Ferguson Guide Standard (GSM) with Novatel Smart7 Receiver Pass-to-Pass Accuracy of +/- 20 cm (+/- 8 inch) For correction signal WAAS (no subscription needed)	M211750		2,750.00
FACTORY INSTALLED MONITOR (OPTIONAL)					**GROUP 13**
115-TX09	ACX2468300	Second Datatronic 5 Monitor Must Order Factory MF Guide Completion Package ACX2468360 or ACX2468470	M139755		1,815.00

WR9980 SELF-PROPELLED WINDROWER

Order Code	Catalog Number	Description	Factory Code	Approx. Weight(lb)	List Price
FIELD INSTALLED KITS - (order as desired)					**GROUP 99**
	ACX2468480M	Second Datatronic 5 Monitor	M139755		1,815.00
	700963928M	Windshield Wiper / Washer MY21 and older WR9900's	M57904		752.00
	700963930M♦	Tractor Single Point Quick Coupler Kit (Includes Connections for Both Sides)	M90937		1,181.00
	700963923M	Reel - Fore/Aft Tractor	M17556		228.00
	700959709M	Adapter Kit Draper/Auger Header	M88781		1,153.00
	700961626M	Rear End Counterbalance Weight Kit	M84084		1,092.00
	700965078M	Rear Steer/Auxiliary Pump Combination Adapter Kit (For use with Models equipped with RearSteer)	M26411		343.00
	700959625M	Rear Hitch Kit for Rollers	M11781		153.00
	700962908M	Auxiliary Hydraulic Kit	M201124		2,612.00
	700962909M	Auxiliary Hose Kit (For BioMass Auger) (Requires Auxiliary Hydraulic Kit (700962908M) to install)	M27566		358.00
	700964077M	Quick Coupler for Auxiliary Hose Kit. (Requires the Windrower and Header to be Equipped with Single Point Adapters)	M17248		224.00
	700963427M	Transit Coating (Factory Applied) (Recommended for shipments occurring in November through March 31ST)	M70532		916.00
TRIPLE WINDROW ATTACHMENT COMPONENTS					
	ACX3594260M	Triple Windrow Attachment (Compatible with RearSteer Windrowers) (Equipping Header with Electric Swathboard Actuator Kit Required) (Requires Auxiliary Hydraulic Kit 700962908M) (RearSteer Units also Require RearSteer/ Auxiliary Pump Combination Adapter kit- 700965078M)	M1191960		15,480.00

♦ When Ordering a Quick Couplers for the Self Propelled Windrower and Header, Make Sure the Header and Windrower are Equipped with the Appropriate Kits.

WR9970 SELF-PROPELLED WINDROWER

FOB Hesston, KS

STANDARD EQUIPMENT

AGCO Power™ Turbo-Charged and Intercooled Diesel 7.4 CTA
SCR Emission Control System
7.4 Liter 6 Cylinder Engine
  Rated Horsepower: 235 at 2100 RPM
  Maximum Horsepower: 250 at 1950 RPM
Variable Speed Ground Drive Motors
Electronically Actuated Parking Lock
Electronic Header Engage/ Disengage with Reverser
Tandem Header Drive Pumps- Dual Header Hydraulic Hookups
Automatic Header Safety Lock
Hydraulic Header Tilt
Massey Ferguson Guide Ready
Massey Ferguson Connect
Precision Auto Guide Ready
Electro-Hydraulic Steering
Adjustable Steering Sensitivity
Adjustable Rear Axle Casters
GlideRider™ Suspended Rear Axle
Disc Header Receivers
22 mph High Speed Ground Drive
V-Cool™ Hydraulic Auto-Cleaning and Cooling Package
Ground Level Maintenance
12-Volt Electrical System
130 Gallon Fuel Tank
Integrated Horn

Deluxe Vision Cab
  Enhanced Interior and Exterior Styling
  OptiRide™ Four-Post Coil over Shock Suspension
  130 Cubic Feet of Interior Cab Volume
  77 sq. ft. of Glass Area
  33 sq. ft. of Curved Windshield Glass
  Large Entry/ Egress Door
  In Cab Foot Pegs
  Cab Exterior Access Steps
  Programmable FNR Handle -16 Fingertip Controlled Functions
  Automatic Climate Control
  Cloth Seat, no Ventilation or Heating
  Tinted Rear Window
  Integrated Datatronic 5 Color Touch Screen Monitor
  2 Large External Remote Adjusted Rear View Mirrors
  Tilt and Telescoping Adjustable Steering Column
  B Pillar Mounted Ignition Switch
  Large Instructor Seat- Foldable Work Station
  Pull Down Sunshade
  Multiple Storage Compartments
  AM / FM, USB, Satellite & Bluetooth Compatible
  Dual Beacon Lights
  Windshield Wiper / Washer

WR9900 WINDROWERS ARE ONLY COMPATIBLE WITH 9300, 9200 & 5400 SERIES HEADERS

Order Code	Catalog Number	Description	Factory Code	Approx. Weight(lb)	List Price
ONE ITEM FROM EACH GROUP MUST BE SPECIFIED UNLESS NOTED OTHERWISE					
BASE MACHINE					**GROUP 01**
MFWR9970	ACX2468410	WR9970 Self Propelled Windrower	M12684364		164,732.00
UPGRADE PACKAGE					**GROUP 02**
	MKT0370	Premium Grain Package Includes: Reel Fore/Aft Rear End Counterbalance Weight Quick Connect Coupler- Single Point (Required for 5400 Header) Adapter Kit Draper/Auger Header Planetary Shields LED Light Package	M468699		6,087.00
STEERING					**GROUP 03**
50-D023	700965068	High Speed Transport, Standard Steering - 22 MPH			**In Base**
50-D024	ACX3131760	RearSteer High Speed Transport - 24.5 MPH	M477015		6,195.00
CAB MOUNTING					**GROUP 04**
20-UC05	700963936	Coil Spring Suspension			**In Base**
20-UC06	700963935	Air Suspension with Compressor	M318934		4,142.00
SEAT					**GROUP 05**
35-AE10	700965074	Seat-Standard - Cloth, no Ventilation or Heating			**In Base**
35-AE13	700965075	Seat-Deluxe - Leather, with Ventilation and Heating	M254870		3,310.00
LIGHTS					**GROUP 06**
125-VL05	700963356	Standard Lights			**In Base**
125-VL04	700963357	LED Lights	M163856		2,128.00
REAR HITCH					**GROUP 07**
80-S702	700961638	Pivoting Hitch(Available w/ Rear Wheel Steer option only).	M101255		1,315.00
80-S701	700959624	Rear Hitch for Rollers	M11473		149.00
QUICK COUPLERS					**GROUP 08**
60-GC01	700963389	Less Quick Couplers			**In Base**
60-GC03	700963388	Quick Connect Coupler- Single Point (Required for 5400 Header - Adaptable for Rotary and Sickle Headers)	M83391		1,083.00

Dealers are Required to have EDT Tool Before ordering WR Windrowers.

WR9970 SELF-PROPELLED WINDROWER

Order Code	Catalog Number	Description	Factory Code	Approx. Weight(lb)	List Price
TIRE OPTIONS					**GROUP 09**
75-S116	ACX2796420	23.1 x 26 Bias Turf Tires (Goodyear) w/ 16.5L x 16.1 Rear	M575421		7,473.00
75-S117	ACX2796450	23.1R26 Turf Radial Tires (Goodyear) w/ 16.5L x 16.1 Rear	M732578		9,514.00
75-S120	ACX2796470	620/75R26 Turf Radial Tire (Alliance) Deep Lug with 16.5L x 16.1 Rear	M534765		6,945.00
75-S119	ACX2796490	620/75R26 Radial Bar (Alliance) with 16.5L x 16.1 Rear	M734426		9,538.00
75-S118	ACX2796520	620/75R26 Radial Bar (Michelin) with 16.5L x 16.1 Rear	M823746		10,698.00
RADIO					**GROUP 10**
30-A506	700963919	Deluxe Radio			**In Base**
30-A501	700963920	Less Radio	(M08470)		(110.00)
FACTORY INSTALLED TELEMETRY					**GROUP 11**
65- TE04	ACX2468500	Massey Ferguson Connect Mid-Spec Package Verizon/GSM Capabilities Includes 5 year Subscription – Dealer Activation Required			**In Base**
65-TE05	ACX2468510	Massey Ferguson Connect High-Spec Package Verizon/GSM/Iridium Capabilities Includes 5 year Subscription – Dealer Activation Required	M136367		1,771.00
FACTORY INSTALLED MASSEY FERGUSON GUIDE					**GROUP 12**
70-XR23	ACX2468360	Massey Ferguson Guide Standard (GSM) Trimble® AG-482 Receiver Pass-to-Pass Accuracy of +/- 20 cm (+/- 8 inch) For correction signal WAAS (no subscription needed)	M273350		3,550.00
70-XR24	ACX2468470	Massey Ferguson Guide Standard (GSM) with Novatel Smart7 Receiver Pass-to-Pass Accuracy of +/- 20 cm (+/- 8 inch) For correction signal WAAS (no subscription needed)	M211750		2,750.00
FACTORY INSTALLED MONITOR (OPTIONAL)					**GROUP 13**
115-TX09	ACX2468300	Second Datatronic 5 Monitor Must Order Factory MF Guide Completion Package ACX2468360 or ACX2468470	M139755		1,815.00

WR9970 SELF-PROPELLED WINDROWER

Order Code	Catalog Number	Description	Factory Code	Approx. Weight(lb)	List Price
FIELD INSTALLED KITS - (order as desired)					**GROUP 99**
	ACX2468480M	Second Datatronic 5 Monitor	M139755		1,815.00
	700963928M	Windshield Wiper / Washer MY21 and older WR9900's	M57904		752.00
	700963930M♦	Tractor Single Point Quick Coupler Kit (Includes Connections for Both Sides)	M90937		1,181.00
	700963923M	Reel - Fore/Aft Tractor	M17556		228.00
	700959709M	Adapter Kit Draper/Auger Header	M88781		1,153.00
	700961626M	Rear End Counterbalance Weight Kit	M84084		1,092.00
	700965078M	Rear Steer/Auxiliary Pump Combination Adapter Kit (For use with Models equipped with RearSteer)	M26411		343.00
	700959625M	Rear Hitch Kit for Rollers	M11781		153.00
	700962908M	Auxiliary Hydraulic Kit	M201124		2,612.00
	700962909M	Auxiliary Hose Kit (For BioMass Auger) (Requires Auxiliary Hydraulic Kit (700962908M) to install)	M27566		358.00
	700964077M	Quick Coupler for Auxiliary Hose Kit (Requires the Windrower and Header to be Equipped with Single Point Adapters)	M17248		224.00
	700963427M	Transit Coating (Factory Applied) (Recommended for shipments occurring in November through March 31ST)	M70532		916.00
TRIPLE WINDROW ATTACHMENT COMPONENTS					
	ACX3594260M	Triple Windrow Attachment (Compatible with RearSteer Windrowers) (Equipping Header with Electric Swathboard Actuator Kit Required) (Requires Auxiliary Hydraulic Kit 700962908M) (RearSteer Units also Require RearSteer/ Auxiliary Pump Combination Adapter kit- 700965078M)	M1191960		15,480.00

♦ When Ordering a Quick Couplers for the Self Propelled Windrower and Header, Make Sure the Header and Windrower are Equipped with the Appropriate Kits.

HESSTON by MASSEY FERGUSON

WR9960 SELF-PROPELLED WINDROWER

FOB Hesston, KS

STANDARD EQUIPMENT

AGCO Power™ Turbo-charged and Intercooled Diesel 4.9 CTA
SCR & Cooled EGR Emission Control System
4.9L 4 Cylinder Quadboost
  Rated Horsepower: 197 at 2100 RPM
  Maximum Horsepower: 208 at 1900 RPM
Variable Speed Ground Drive Motors
Electronically Actuated Parking Lock
Electronic Header Engage/ Disengage with Reverser
Tandem Header Drive Pumps- Dual Header Hydraulic Hookups
Automatic Header Safety Lock
Massey Ferguson Guide Ready
Massey Ferguson Connect
Hydraulic Header Tilt
Precision Auto Guide Ready
Electro-Hydraulic Steering
Adjustable Steering Sensitivity
Adjustable Rear Axle Casters
GlideRider™ Suspended Rear Axle
Disc Header Receivers
22 mph High Speed Ground Drive
V-Cool™ Hydraulic Auto-Cleaning and Cooling Package
Ground Level Maintenance
12-Volt Electrical System
130 Gallon Fuel Tank
Integrated Horn

Deluxe Vision Cab
  Enhanced Interior and Exterior Styling
  OptiRide™ Four-Post Coil over Shock Suspension
  130 Cubic Feet of Interior Cab Volume
  77 sq. ft. of Glass Area
  33 sq. ft. of Curved Windshield Glass
  Large Entry/ Egress Door
  In Cab Foot Pegs
  Cab Exterior Access Steps
  Programmable FNR Handle -16 Fingertip Controlled Functions
  Automatic Climate Control
  Cloth Seat, no Ventilation or Heating
  Tinted Rear Window
  Integrated Datatronic 5 Color Touch Screen Monitor
  2 Large External Remote Adjusted Rear View Mirrors
  Tilt and Telescoping Adjustable Steering Column
  B Pillar Mounted Ignition Switch
  Large Instructor Seat- Foldable Work Station
  Pull Down Sunshade
  Multiple Storage Compartments
  AM / FM, USB, Satellite & Bluetooth Compatible
  Dual Beacon Lights
  Windshield Wiper / Washer

WR9900 WINDROWERS ARE ONLY COMPATIBLE WITH 9300, 9200 & 5400 SERIES HEADERS

Order Code	Catalog Number	Description	Factory Code	Approx. Weight(lb)	List Price
ONE ITEM FROM EACH GROUP MUST BE SPECIFIED UNLESS NOTED OTHERWISE					
BASE MACHINE					**GROUP 01**
MFWR9960	ACX2468430	WR9960 Self Propelled Windrower	M12224805		158,765.00
UPGRADE PACKAGE					**GROUP 02**
	MKT0371	Premium Grain Package Includes: Reel Fore/Aft Rear End Counterbalance Weight Quick Connect Coupler- Single Point (Required for 5400 Header) Adapter Kit Draper/Auger Header Planetary Shields LED Light Package	M468699		6,087.00
STEERING					**GROUP 03**
50-D023	700965069	High Speed Transport, Standard Steering - 22 MPH			**In Base**
50-D024	ACX3131750	RearSteer High Speed Transport - 24.5 MPH	M477015		6,195.00
CAB MOUNTING					**GROUP 04**
20-UC05	700963936	Coil Spring Suspension			**In Base**
20-UC06	700963939	Air Suspension with Compressor	M318934		4,142.00
SEAT					**GROUP 05**
35-AE10	700965074	Seat-Standard - Cloth, no Ventilation or Heating			**In Base**
35-AE13	700965075	Seat-Deluxe - Leather, with Ventilation and Heating	M254870		3,310.00
LIGHTS					**GROUP 06**
125-VL05	700963356	Standard Lights			**In Base**
125-VL04	700963357	LED Lights	M163856		2,128.00
REAR HITCH					**GROUP 07**
80-S702	700961638	Pivoting Hitch(Available with RearSteer option only)	M101255		1,315.00
80-S701	700959624	Rear Hitch for Rollers	M11473		149.00
QUICK COUPLERS					**GROUP 08**
60-GC01	700963389	Less Quick Couplers			**In Base**
60-GC03	700963388	Quick Connect Coupler- Single Point (Required for 5400 Header - Adaptable for Rotary and Sickle Headers)	M83391		1,083.00

Dealers are Required to have EDT Tool Before ordering WR Windrowers.

WR9960 SELF-PROPELLED WINDROWER

Order Code	Catalog Number	Description	Factory Code	Approx. Weight(lb)	List Price
TIRE OPTIONS					**GROUP 09**
75-S116	ACX2796420	23.1 x 26 Bias Turf Tires (Goodyear) w/ 16.5L x 16.1 Rear	M575421		7,473.00
75-S117	ACX2796450	23.1R26 Turf Radial Tires (Goodyear) w/ 16.5L x 16.1 Rear	M732578		9,514.00
75-S120	ACX2796470	620/75R26 Turf Radial Tire (Alliance) Deep Lug with 16.5L x 16.1 Rear	M534765		6,945.00
75-S119	ACX2796490	620/75R26 Radial Bar (Alliance) with 16.5L x 16.1 Rear	M734426		9,538.00
75-S118	ACX2796520	620/75R26 Radial Bar (Michelin) with 16.5L x 16.1 Rear	M823746		10,698.00
RADIO					**GROUP 10**
30-A506	700963919	Deluxe Radio			**In Base**
30-A501	700963920	Less Radio	(M08470)		(110.00)
FACTORY INSTALLED TELEMETRY					**GROUP 11**
65- TE04	ACX2468500	Massey Ferguson Connect Mid-Spec Package Verizon/GSM Capabilities Includes 5 year Subscription – Dealer Activation Required			**In Base**
65-TE05	ACX2468510	Massey Ferguson Connect High-Spec Package Verizon/GSM/Iridium Capabilities Includes 5 year Subscription – Dealer Activation Required	M136367		1,771.00
FACTORY INSTALLED MASSEY FERGUSON GUIDE					**GROUP 12**
70-XR23	ACX2468360	Massey Ferguson Guide Standard (GSM) Trimble® AG-482 Receiver Pass-to-Pass Accuracy of +/- 20 cm (+/- 8 inch) For correction signal WAAS (no subscription needed)	M273350		3,550.00
70-XR24	ACX2468470	Massey Ferguson Guide Standard (GSM) with Novatel Smart7 Receiver Pass-to-Pass Accuracy of +/- 20 cm (+/- 8 inch) For correction signal WAAS (no subscription needed)	M211750		2,750.00
FACTORY INSTALLED MONITOR (OPTIONAL)					**GROUP 13**
115-TX09	ACX2468300	Second Datatronic 5 Monitor Must Order Factory MF Guide Completion Package ACX2468360 or ACX2468470	M139755		1,815.00

WR9960 SELF-PROPELLED WINDROWER

Order Code	Catalog Number	Description	Factory Code	Approx. Weight(lb)	List Price
FIELD INSTALLED KITS - (order as desired)					**GROUP 99**
	ACX2468480M	Second Datatronic 5 Monitor	M139755		1,815.00
	700963928M	Windshield Wiper / Washer MY21 and older WR9900's	M57904		752.00
	700963930M♦	Tractor Single Point Quick Coupler Kit (Includes Connections for Both Sides)	M90937		1,181.00
	700963923M	Reel - Fore/Aft Tractor	M17556		228.00
	700959709M	Adapter Kit Draper/Auger Header	M88781		1,153.00
	700961626M	Rear End Counterbalance Weight Kit	M84084		1,092.00
	700965078M	Rear Steer/Auxiliary Pump Combination Adapter Kit (For use with Models equipped with RearSteer)	M26411		343.00
	700959625M	Rear Hitch Kit for Rollers	M11781		153.00
	700962908M	Auxiliary Hydraulic Kit	M201124		2,612.00
	700962909M	Auxiliary Hose Kit (For BioMass Auger) (Requires Auxiliary Hydraulic Kit (700962908M) to install)	M27566		358.00
	700964077M	Quick Coupler for Auxiliary Hose Kit. (Requires the Windrower and Header to be Equipped with Single Point Adapters)	M17248		224.00
	700963427M	Transit Coating (Factory Applied) (Recommended for shipments occurring in November through March 31ST)	M70532		916.00
TRIPLE WINDROW ATTACHMENT COMPONENTS					
	ACX3594260M	Triple Windrow Attachment (Compatible with RearSteer Windrowers) (Equipping Header with Electric Swathboard Actuator Kit Required) (Requires Auxiliary Hydraulic Kit 700962908M) (RearSteer Units also Require RearSteer/ Auxiliary Pump Combination Adapter kit- 700965078M)	M1191960		15,480.00

♦ When Ordering a Quick Couplers for the Self Propelled Windrower and Header, Make Sure the Header and Windrower are Equipped with the Appropriate Kits.

WR9950 SELF-PROPELLED WINDROWER

FOB Hesston, KS

STANDARD EQUIPMENT

AGCO Power™ Turbo-charged and Intercooled Diesel 4.9 CTA
SCR Emission Control System
4.9 Liter 4 Cylinder Engine
  Rated Horsepower: 160 at 2100 RPM
  Maximum Horsepower: 173 at 1900 RPM
Variable Speed Ground Drive Motors
Electronically Actuated Parking Lock
Electronic Header Engage/ Disengage with Reverser
Tandem Header Drive Pumps- Dual Header Hydraulic Hookups
Automatic Header Safety Lock
Hydraulic Header Tilt
Massey Ferguson Guide Ready
Massey Ferguson Connect
Precision Auto Guide Ready
Electro-Hydraulic Steering
Adjustable Steering Sensitivity
Adjustable Rear Axle Casters
GlideRider™ Suspended Rear Axle
22 mph High Speed Ground Drive
V-Cool™ Hydraulic Auto-Cleaning and Cooling Package
Ground Level Maintenance
12-Volt Electrical System
130 Gallon Fuel Tank
Integrated Horn

Deluxe Vision Cab
  Enhanced Interior and Exterior Styling
  OptiRide™ Four-Post Coil over Shock Suspension
  130 Cubic Feet of Interior Cab Volume
  77 sq. ft. of Glass Area
  33 sq. ft. of Curved Windshield Glass
  Large Entry/ Egress Door
  In Cab Foot Pegs
  Cab Exterior Access Steps
  Programmable FNR Handle -16 Fingertip Controlled Functions
  Automatic Climate Control
  Cloth Seat, no Ventilation or Heating
  Tinted Rear Window
  Integrated Datatronic 5 Color Touch Screen Monitor
  2 Large External Remote Adjusted Rear View Mirrors
  Tilt and Telescoping Adjustable Steering Column
  B Pillar Mounted Ignition Switch
  Large Instructor Seat- Foldable Work Station
  Pull Down Sunshade
  Multiple Storage Compartments
  AM / FM, USB, Satellite & Bluetooth Compatible
  Dual Beacon Lights
  Windshield Wiper / Washer

WR9900 WINDROWERS ARE ONLY COMPATIBLE WITH 9300, 9200 & 5400 SERIES HEADERS

Order Code	Catalog Number	Description	Factory Code	Approx. Weight(lb)	List Price
ONE ITEM FROM EACH GROUP MUST BE SPECIFIED UNLESS NOTED OTHERWISE					
BASE MACHINE					**GROUP 01**
MFWR9950	ACX2468460	WR9950 Self Propelled Windrower	M11079145		143,885.00
UPGRADE PACKAGE					**GROUP 02**
	MKT0353	Premium Grain Package Includes: Quick Connect Coupler- Single Point (Required for 5400 Header) Rear Hitch for Rollers Rear End Counterbalance Weight Reel Fore/Aft Planetary Shields LED Light Package	M391391		5,083.00
LIFT ARMS					**GROUP 03**
5-GD02	700963917	Sickle Draper Header			**In Base**
5-GD01	700963916	Rotary Header Receiver (for Operating Rotary Header)	M90552		1,176.00
STEERING					**GROUP 04**
50-D023	700965069	High Speed Transport, Standard Steering - 22 MPH			**In Base**
50-D024	ACX3131750	RearSteer High Speed Transport - 24.5 MPH	M477015		6,195.00
CAB MOUNTING					**GROUP 05**
20-UC05	700963936	Coil Spring Suspension			**In Base**
20-UC06	700963939	Air Suspension with Compressor	M318934		4,142.00
SEAT					**GROUP 06**
35-AE10	700965074	Seat-Standard - Cloth, no Ventilation or Heating			**In Base**
35-AE13	700965075	Seat-Deluxe - Leather, with Ventilation and Heating	M254870		3,310.00
LIGHTS					**GROUP 07**
125-VL05	700963356	Standard Lights			**In Base**
125-VL04	700963357	LED Lights	M163856		2,128.00
REAR HITCH					**GROUP 08**
80-S702	700961638	Pivoting Hitch(Available with RearSteer option only)	M101255		1,315.00
80-S701	700959624	Rear Hitch for Rollers	M11473		149.00
QUICK COUPLERS					**GROUP 09**
60-GC01	700963389	Less Quick Couplers			**In Base**
60-GC03	700963388	Quick Connect Coupler- Single Point (Required for 5400 Header - Adaptable for Rotary and Sickle Headers)	M83391		1,083.00

Dealers are Required to have EDT Tool Before ordering WR Windrowers.

WR9950 SELF-PROPELLED WINDROWER

Order Code	Catalog Number	Description	Factory Code	Approx. Weight(lb)	List Price
TIRE OPTIONS					**GROUP 10**
75-S116	ACX2796420	23.1 x 26 Bias Turf Tires (Goodyear) w/ 16.5L x 16.1 Rear	M575421		7,473.00
75-S117	ACX2796450	23.1R26 Turf Radial Tires (Goodyear) w/ 16.5L x 16.1 Rear	M732578		9,514.00
75-S120	ACX2796470	620/75R26 Turf Radial Tire (Alliance) Deep Lug with 16.5L x 16.1 Rear	M534765		6,945.00
75-S119	ACX2796490	620/75R26 Radial Bar (Alliance) with 16.5L x 16.1 Rear	M734426		9,538.00
75-S118	ACX2796520	620/75R26 Radial Bar (Michelin) with 16.5L x 16.1 Rear	M823746		10,698.00
RADIO					**GROUP 11**
30-A506	700963919	Deluxe Radio			**In Base**
30-A501	700963920	Less Radio	(M08470)		(110.00)
FACTORY INSTALLED TELEMETRY					**GROUP 12**
65- TE04	ACX2468500	Massey Ferguson Connect Mid-Spec Package Verizon/GSM Capabilities Includes 5 year Subscription – Dealer Activation Required			**In Base**
65-TE05	ACX2468510	Massey Ferguson Connect High-Spec Package Verizon/GSM/Iridium Capabilities Includes 5 year Subscription – Dealer Activation Required	M136367		1,771.00
FACTORY INSTALLED MASSEY FERGUSON GUIDE					**GROUP 13**
70-XR23	ACX2468360	Massey Ferguson Guide Standard (GSM) Trimble® AG-482 Receiver Pass-to-Pass Accuracy of +/- 20 cm (+/- 8 inch) For correction signal WAAS (no subscription needed)	M273350		3,550.00
70-XR24	ACX2468470	Massey Ferguson Guide Standard (GSM) with Novatel Smart7 Receiver Pass-to-Pass Accuracy of +/- 20 cm (+/- 8 inch) For correction signal WAAS (no subscription needed)	M211750		2,750.00
FACTORY INSTALLED MONITOR (OPTIONAL)					**GROUP 14**
115-TX09	ACX2468300	Second Datatronic 5 Monitor Must Order Factory MF Guide Completion Package ACX2468360 or ACX2468470	M139755		1,815.00

WR9950 SELF-PROPELLED WINDROWER

Order Code	Catalog Number	Description	Factory Code	Approx. Weight(lb)	List Price
FIELD INSTALLED KITS - (order as desired)					**GROUP 99**
	ACX2468480M	Second Datatronic 5 Monitor	M139755		1,815.00
	700963928M	Windshield Wiper / Washer MY21 and older WR9900's	M57904		752.00
	700963930M♦	Tractor Single Point Quick Coupler Kit (Includes Connections for Both Sides)	M90937		1,181.00
	700963923M	Reel - Fore/Aft Tractor	M17556		228.00
	700959709M	Adapter Kit Draper/Auger Header	M88781		1,153.00
	700961626M	Rear End Counterbalance Weight Kit	M84084		1,092.00
	700965078M	Rear Steer/Auxiliary Pump Combination Adapter Kit (For use with Models equipped with RearSteer)	M26411		343.00
	700959625M	Rear Hitch Kit for Rollers	M11781		153.00
	700962908M	Auxiliary Hydraulic Kit	M201124		2,612.00
	700962909M	Auxiliary Hose Kit (For BioMass Auger) (Requires Auxiliary Hydraulic Kit (700962908M) to install)	M27566		358.00
	700964077M	Quick Coupler for Auxiliary Hose Kit (Requires the Windrower and Header to be Equipped with Single Point Adapters)	M17248		224.00
	700963427M	Transit Coating (Factory Applied) (Recommended for shipments occurring in November through March 31ST)	M70532		916.00
TRIPLE WINDROW ATTACHMENT COMPONENTS					
	ACX3594260M	Triple Windrow Attachment (Compatible with RearSteer Windrowers) (Equipping Header with Electric Swathboard Actuator Kit Required) (Requires Auxiliary Hydraulic Kit 700962908M) (RearSteer Units also Require RearSteer/ Auxiliary Pump Combination Adapter kit- 700965078M)	M1191960		15,480.00

♦ When Ordering a Quick Couplers for the Self Propelled Windrower and Header, Make Sure the Header and Windrower are Equipped with the Appropriate Kits.

HEADERS

9316D TwinMax™ ROTARY HEADER

for WR9980 and WR9970

FOB Hesston, KS

STANDARD EQUIPMENT

16' (4.9m) TwinMax™ Conditioner Disc Header
10 Discs (2500 RPM)
20 Knives (2 per disc), Swing-away, Reversible
¾" to 3" (0m to .1m) Cutting Height
RazorBar™ Cast Modular Cutterbar
Spur Gear Cutterbed Design Utilizing in House
Forged Gears from the AGCO Power Foundry
Turbulence Reduction Roll
Stub Augers
Roll Gap Adjust TwinMax™
Dual 56cc Hydraulic Drive Motors
(Dual Hydraulic Hookups)
Hydraulic Roll Tension
Adjustable through in Cab Monitor
Hay Conditioner Rolls:
4 Herringbone Steel on Steel Conditioning Rolls
Conditioner Roll Length – 110" (2.8m)
Roll Speed – 1290 RPM
Two Adjustable Skid Shoes
Smooth Center Split Rock Guards

9300 SERIES HEADERS ARE ONLY COMPATIBLE WITH WR9900 WINDROWERS.

Order Code	Catalog Number	Description	Factory Code	Approx. Weight(lb)	List Price
ONE ITEM FROM EACH GROUP MUST BE SPECIFIED UNLESS NOTED OTHERWISE					
BASE MACHINE					**GROUP 01**
MF9316D	ACX3494530	9316D 16' (4.9m) TwinMax™ Rotary Header	M4536840	4535	58,920.00
HYDRAULIC COUPLERS					**GROUP 02**
75-GC04	700964068	Hard Plumbed Hydraulic Connections			**In Base**
75-GC03	ACW9348790♦	Single Point Hydraulic Quick Couplers	M77616		1,008.00
HAY CONDITIONER					**GROUP 03**
10-H203	ACW3146580	Steel on Steel Conditioner Rolls (Front and Back)			**In Base**
10-H200	ACW9034590	Less Rear Conditioner	(M296527)		(3,851.00)
FIELD INSTALLED KITS - (order as desired)					**GROUP 99**
	ACW3799420M	Electric Swathboard Actuator Kit Required for use with TWA- Kit # ACX3594260M	M74228	35	964.00
	ACW3837310M	Steel Gauge Wheels (For use with 16' Rotary Headers)	M73689	140	957.00
	ACW5058070M	Filler Pan Kit For use with TWA to Close the Gap between the Cutterbar and the Front "Helper" Roll	M12089		157.00
	ACW9348780M	Header Single Point Hydraulic Couplers Kit	M74536		968.00
	700963427M	Transit Coating (Factory Applied) (Recommended for shipments occurring in November through March 31ST)	M70532		916.00
ORDER FROM PARTS					
	ACW5788240	Crop Divider Wheels			ORDER FROM PARTS
	700207149	Crop Dividers			ORDER FROM PARTS
	700750338	French Operators Manual and Decal Kit		2	No Charge
	700750340	Spanish Operators Manual and Decal Kit		2	No Charge

♦ When Ordering a Quick Couplers for the Self Propelled Windrower or Header, Make Sure the Header and Windrower are Equipped with the Appropriate Kits.

HESSTON by MASSEY FERGUSON

9316S ROTARY HEADER

for WR9980, WR9970 and WR9960

FOB Hesston, KS

STANDARD EQUIPMENT

16' (4.9m) Single Conditioner Disc Header
10 Discs (2500 RPM)
20 Knives (2 per disc), Swing-away, Reversible
¾" to 3" (0m to .1m) Cutting Height
RazorBar™ Cast Modular Cutterbar
Spur Gear Cutterbed Design Utilizing in House
Forged Gears from the AGCO Power Foundry
Turbulence Reduction Roll
Roll Gap Adjust Single Conditioner
Dual 56cc Hydraulic Drive Motors
(Dual Hydraulic Hookups)
Hydraulic Roll Tension
Adjustable through in Cab Monitor
Hay Conditioner Rolls:
2 Herringbone Steel on Steel Conditioning Rolls
Conditioner Roll Length – 110" (2.8m)
Roll Speed – 1290 RPM
Two Adjustable Skid Shoes
Smooth Center Split Rock Guards
Top Shield Protector

9300 SERIES HEADERS ARE ONLY COMPATIBLE WITH WR9900 WINDROWERS.

Order Code	Catalog Number	Description	Factory Code	Approx. Weight(lb)	List Price
ONE ITEM FROM EACH GROUP MUST BE SPECIFIED UNLESS NOTED OTHERWISE					
BASE MACHINE					**GROUP 01**
MF9316S	ACX3494520	9316S 16' (4.9m) Rotary Header	M3492027		45,351.00
HYDRAULIC COUPLERS					**GROUP 02**
75-GC04	700964068	Hard Plumbed Hydraulic Connections			**In Base**
75-GC03	ACW9348790♦	Single Point Hydraulic Quick Couplers	M77616		1,008.00
FIELD INSTALLED KITS - (order as desired)					**GROUP 99**
	ACW3799420M	Electric Swathboard Actuator Kit Required for use with TWA- Kit # ACX3594260M	M74228	35	964.00
	ACW3837310M	Steel Gauge Wheels (For use with 16' Rotary Headers)	M73689	140	957.00
	ACW5058070M	Filler Pan Kit For use with TWA to Close the Gap between the Cutterbar and the Front "Helper" Roll	M12089		157.00
	ACW9348780M	Header Single Point Hydraulic Couplers Kit	M74536		968.00
	700963427M	Transit Coating (Factory Applied) (Recommended for shipments occurring in November through March 31ST)	M70532		916.00
ORDER FROM PARTS					
	ACW5788240	Crop Divider Wheels			ORDER FROM PARTS
	700207149	Crop Dividers			ORDER FROM PARTS
	700750338	French Operators Manual and Decal Kit		2	No Charge
	700750340	Spanish Operators Manual and Decal Kit		2	No Charge

♦ When Ordering a Quick Couplers for the Self Propelled Windrower and Header, Make Sure the Header and Windrower are Equipped with the Appropriate Kits.

9313D TwinMax™ ROTARY HEADER

for WR9980, WR9970, WR9960, WR9950

FOB Hesston, KS

STANDARD EQUIPMENT

13' (3.9m) TwinMax™ Conditioner Disc Header
8 Discs (2500 RPM)
16 Knives (2 per disc), Swing-away, Reversible
¾" to 3" (0m to .1m) Cutting Height
RazorBar™ Cast Modular Cutterbar
Spur Gear Cutterbed Design Utilizing in House Forged Gears from the AGCO Power Foundry
Turbulence Reduction Roll
Dual 44cc Hydraulic Drive Motors (Dual Hydraulic Hookups)
Hydraulic Roll Tension Adjustable through in Cab Monitor

Hay Conditioner Rolls:
4 Herringbone Steel on Steel Conditioning Rolls
Conditioner Roll Length – 110" (2.8m)
Roll Speed – 1290 RPM
Smooth Center Split Rock Guards
Top Shield Protector

9300 Series Headers are only compatible with WR9900 Windrowers.

Order Code	Catalog Number	Description	Factory Code	Approx. Weight(lb)	List Price
ONE ITEM FROM EACH GROUP MUST BE SPECIFIED UNLESS NOTED OTHERWISE					
BASE MACHINE					**GROUP 01**
MF9313D	ACX3494510	9313D 13' (3.9m) TwinMax™ Rotary Header	M3477166		45,158.00
HYDRAULIC COUPLERS					**GROUP 02**
75-GC04	700964068	Hard Plumbed Hydraulic Connections			**In Base**
75-GC03	700964067♦	Single Point Hydraulic Quick Couplers	M77616		1,008.00
OPTIONAL FIELD ACCESSORIES					**GROUP 99**
	ACX2405510M	Swathboard Actuator Kit Required for use with TWA- Kit # ACX3594260M	M74228	35	964.00
	700963065M	Hydraulic Assist Kit (for Biomass Applications)	M122353		1,589.00
	700962390M♦	Header Single Point Hydraulic Couplers Kit	M74536		968.00
	700964066M	Bio Auger Kit (Double Conditioner Only) ***9313D ROTARY HEADER REQUIRES*:** BIO AUGER KIT (700964066M) HYDRAULIC ASSIST KIT (700963065M) FILLER PAN (700963050M) ***WR9900 SERIES WINDROWERS REQUIRE THE FOLLOWING KITS:*** AUXILIARY PUMP KIT (700962908M) AUX HOSE KIT (700962909M) AUXILIARY HOSE KIT QUICK COUPLERS (700964077M)- ONLY IF WINDROWER IS EQUIPPED WITH TRACTOR AND HEADER SINGLE POINT ADAPTERS	M291137		3,781.00
	700963050M	Filler Pan	M19866		258.00
	700963427M	Transit Coating (Factory Applied) (Recommended for shipments occurring in November through March 31ST)	M70532		916.00
ORDER FROM PARTS					
	ACX2410350	Crop Divider Wheels		ORDER FROM PARTS	
	700207149	Crop Dividers		ORDER FROM PARTS	
	ACX2430250	French Operators Manual and Decal Kit		2	No Charge
	ACX2430270	Spanish Operators Manual and Decal Kit		2	No Charge

♦ When Ordering a Quick Couplers for the Self Propelled Windrower or Header, Make Sure the Header and Windrower are Equipped with the Appropriate Kits.

HESSTON by MASSEY FERGUSON

9313S ROTARY HEADER

for WR9980, WR9970, WR9960, WR9950

FOB Hesston, KS

STANDARD EQUIPMENT

13' (3.9m) Single Conditioner Disc Header
8 Discs (2500 RPM)
16 Knives (2 per disc), Swing-away, Reversible
¾" to 3" (0m to .1m) Cutting Height
RazorBar™ Cast Modular Cutterbar
Spur Gear Cutterbed Design Utilizing in House
Forged Gears from the AGCO Power Foundry
Turbulence Reduction Roll
Dual 44cc Hydraulic Drive Motors
(Dual Hydraulic Hookups)
Hydraulic Roll Tension
Adjustable through in Cab Monitor
Hay Conditioner Rolls:
2 Herringbone Steel on Steel Conditioning Rolls
Conditioner Roll Length – 110" (2.8m)
Roll Speed – 1290 RPM
Smooth Center Split Rock Guards
Top Shield Protector

9300 SERIES HEADERS ARE ONLY COMPATIBLE WITH WR9900 WINDROWERS.

Order Code	Catalog Number	Description	Factory Code	Approx. Weight(lb)	List Price
ONE ITEM FROM EACH GROUP MUST BE SPECIFIED UNLESS NOTED OTHERWISE					
BASE MACHINE					**GROUP 01**
MF9313S	ACX3494500	9313S 13' (3.9m) Rotary Header	M2532607		32,891.00
HYDRAULIC COUPLERS					**GROUP 02**
75-GC04	700964068	Hard Plumbed Hydraulic Connections			**In Base**
75-GC03	700964067♦	Single Point Hydraulic Quick Couplers	M77616		1,008.00
FIELD INSTALLED KITS - (order as desired)					**GROUP 99**
	ACX2405510M	Electric Swathboard Actuator Kit Required for use with TWA Kit # ACX3594260M	M74228	35	964.00
	700962390M♦	Header Single Point Hydraulic Couplers Kit	M74536		968.00
	700963050M	Filler Pan	M19866		258.00
	700963427M	Transit Coating (Factory Applied) (Recommended for shipments occurring in November through March 31ST)	M70532		916.00
ORDER FROM PARTS					
	ACX2410350	Crop Divider Wheels			ORDER FROM PARTS
	700207149	Crop Dividers			ORDER FROM PARTS
	ACX2430250	French Operators Manual and Decal Kit		2	No Charge
	ACX2430270	Spanish Operators Manual and Decal Kit		2	No Charge

♦ When Ordering a Quick Couplers for the Self Propelled Windrower or Header, Make Sure the Header and Windrower are Equipped with the Appropriate Kits.

5400 DRAPER HEADER

for WR9980, WR9970, WR9960 and WR9950

Primary Color; Grey

FOB Hesston, KS

STANDARD EQUIPMENT

Center Delivery Sizes: 20 ft., 25 ft., 30 ft., 35 ft., 40 ft.
Shiftable Sizes: 25 ft., 30 ft., 35 ft., 40 ft.
(Self Cleaning Slide Rails)
Schumacher Hydrostatic Double Knife Drive
Gearbox 1460 Strokes per Minute (730 rpm)
Rubberized Drapers with Reinforcing Slats
Drapers: Hydrostatically Driven with In-Cab Speed Control
Swath Opening: 78.5“ (2.0m) Center and Side Delivery Position
Double Heat Treated, Extended Tang Sickle Guard
Heavy Duty Knife Guards and Adjustable Hold Downs
Reel and Draper Belts Installed from Factory
Header Single Point Quick Connect Kit
Heavy Duty Single Piece Reel with Longer HD tines
Reel Drive: Auto Reel Speed Feature
Rubber Coated Drive Rolls with V-Guide Belt Slot
Electric Reel Fore/Aft Control
Reel Drive Gearbox (Chain-less drive)
Cutterbar Poly Skids Standard
Hydraulic Deck Shift, Inside Cab Controlled
Adjustable Draper Belt Tension
Belt Speed Sensor

5400 SERIES HEADERS ARE ONLY COMPATIBLE WITH WR9900 WINDROWERS.

Order Code	Catalog Number	Description	Factory Code	Approx. Weight(lb)	List Price
ONE ITEM FROM EACH GROUP MUST BE SPECIFIED UNLESS NOTED OTHERWISE					
BASE MACHINE					**GROUP 01**
MF5400-20	ACX3494450	20' (6.1m) Draper Header			**In Base**
MF5400-25	ACX3494460	25' (7.6m) Draper Header			**In Base**
MF5400-30	ACX3494470	30' (9.1m) Draper Header			**In Base**
MF5400-35	ACX3494480	35' (10.7m) Draper Header			**In Base**
MF5400-40	ACX3494490	40' (12.2m) Draper Header (Single Piece Reel)			**In Base**
SINGLE / DOUBLE KNIFE (CENTER DELIVERY / DOUBLE SWATH)					**GROUP 02**
H118	700963470	20' (6.1m) Double Knife / Center Delivery	M4621155		60,015.00
H117	700963477	25' (7.6m) Single Knife / Center Delivery	M4057207		52,691.00
H119	700963475	25' (7.6m) Single Knife / Double Swath	M4177866		54,258.00
H118	700963471	25' (7.6m) Double Knife / Center Delivery	M4620154		60,002.00
H120	700963466	25' (7.6m) Double Knife / Double Swath	M5105793		66,309.00
H117	700963478	30' (9.1m) Single Knife / Center Delivery	M4274116		55,508.00
H119	700963476	30' (9.1m) Single Knife / Double Swath	M4449214		57,782.00
H118	700963472	30' (9.1m) Double Knife / Center Delivery	M4851154		63,002.00
H120	700963467	30' (9.1m) Double Knife / Double Swath	M5391925		70,025.00
H118	700963473	35' (10.7m) Double Knife / Center Delivery	M5673899		73,687.00
H120	700963468	35' (10.7m) Double Knife / Double Swath	M6077148		78,924.00
H118	700963474	40' (12.2m) Double Knife / Center Delivery	M5909750		76,750.00
H120	700963469	40' (12.2m) Double Knife / Double Swath	M6352808		82,504.00

HESSTON by MASSEY FERGUSON

5400 DRAPER HEADER

Order Code	Catalog Number	Description	Factory Code	Approx. Weight(lb)	List Price
SICKLE AND GUARDS					**GROUP 03**
H511	700964341	20' (6.1m) Double Knife / Standard Sickle			No Charge
H513	ACX2418790	20' (6.1m) Double Knife / Schumacher Sickle.			No Charge
H510	700964345	25' (7.6m) Single Knife / Standard Sickle			No Charge
H512	ACX2418810	25' (7.6m) Single Knife / Schumacher Sickle			No Charge
H511	700964343	25' (7.6m) Double Knife / Standard Sickle			No Charge
H513	ACX2418880	25' (7.6m) Double Knife / Schumacher Sickle.			No Charge
H510	700964349	30' (9.1m) Single Knife / Standard Sickle			No Charge
H512	ACX2418830	30' (9.1m) Single Knife / Schumacher Sickle			No Charge
H511	700964347	30' (9.1m) Double Knife / Standard Sickle			No Charge
H513	ACX2418820	30' (9.1m) Double Knife / Schumacher Sickle.			No Charge
H511	700964351	35' (10.7m) Double Knife / Standard Sickle			No Charge
H513	ACX2418840	35' (10.7m) Double Knife / Schumacher Sickle.			No Charge
H511	700964353	40' (12.2m) Double Knife / Standard Sickle			No Charge
H513	ACX2418850	40' (12.2m) Double Knife / Schumacher Sickle.			No Charge

5400 DRAPER HEADER

Order Code	Catalog Number	Description	Factory Code	Approx. Weight(lb)	List Price
FIELD INSTALLED					**GROUP 99**
	700959222M	Swivel Gauge Wheels (20' to 40') (Outboard Mounting and will allow the Gauge Wheels to be in Direct Ground Contact, while Turning and can be used on Rolling Terrain.)	M136521		1,773.00
	700961182M	Spring Gauge Wheel Kit (30' 35' & 40') (Mounted Inward on the Header) (Cannot be combined with Slow Speed Transport Kit)	M194887		2,531.00
	71396012	Parking Stand (Required to Disconnect Header if Gauge Wheels are not Ordered)	M19096	32	248.00
	700961141M	Insert, Narrow Opening Kit (Reduces opening by 11" (.3m)	M37114		482.00
	700961183M	Slow Speed Transport Kit for 30' Only (Acts as gauge wheel when in cutting position)	M546315		7,095.00
	700961365M	Slow Speed Transport Kit for 35' / 40' Only (Acts as gauge wheel when in cutting position)	M510972		6,636.00
	700961142M	Skid Shoe Kit	M70532		916.00
	700964116M	Double Draper Drive	M185031		2,403.00
	700962375M	Double Knife Stub Guard Kit, 20'	M172480		2,240.00
	700962376M	Single Knife Stub Guard Kit, 25'	M202202		2,626.00
	700962378M*	Base Stub Guard Kit, 5'	M44429		577.00
	700963426M	Transit Coating (Factory Applied) (Recommended for shipments occurring in November through March 31ST)	M80619		1,047.00

*Order additional 5' stub guard Kits as Required to Reach Desired Footage (works w/ both double & single knife stub guard kits).

ORDER FROM PARTS

700747680	Crop Divider (PVC Pipe - order two per head)		ORDER FROM PARTS

Note: Cross Auger Kits are now offered through AGShield 1-(204) 539-2000

Cross Auger Kit will be used for Peas and Tall Crops like Canola.

MOWERS

DISC MOWER CONDITIONERS

FOB Hesston, KS

PRODUCT INFORMATION

Model	**1316S**	**1393**
Width of Cut	16’ (4.9m)	13' (3.9m)
Windrow/ Swath Width	40" to 96" (1m to 2.4m)	40" to 96" (1m to 2.4m)
Pivot	Center	Center
Cutting Height: Minimum Maximum	 3/4“ (19mm) 3" (76mm)	 3/4” (19mm) 3" (76mm)
Horsepower (minimum requirements)	120	100
PTO (RPM)	1000	1000
Tires:	31x13.5-15	31x13.5-15

Model	**1376**	**1373**	**1359**
Width of Cut	9' 10" (2.8m)	9' 10" (2.8m)	9'3" (2.8m)
Windrow/ Swath Width	42" to 73" (1.1m to 1.9m)	42" to 73" (1.1m to 1.9m)	30" to 72" (.8m to 1.8m)
Pivot	Center	Side	Side
Cutting Height: Minimum	0"	0"	1.3" (0m)
Maximum	8" (.2m)	8" (.2m)	3" (.1m)
Horsepower	75	75	60
(minimum requirements)			
PTO (RPM)	540	540	540
Tires:	11Lx15 std. or 31x13.5-15 opt.	11Lx15 std. or 31x13.5-15 opt.	9.5Lx14

HESSTON by MASSEY FERGUSON

1316S CENTER PIVOT DISC MOWER CONDITIONER

FOB Hesston, KS

STANDARD EQUIPMENT

RazorEdge™ Welded One-piece Cutterbed
Working Width 16' (4.9m)
10 Discs (2450 RPM)
Disc diameter 24.5"
Spur Gear Cutterbed Design Utilizing in House Forged Gears from the AGCO Power Foundry
Swath Width 40" to 96" (1m to 2.4m)
Transport Width 16.25 ft (5m)
31 x 13.5 x 15 Tires
20 Knives - Swing-away, Reversible
1000 PTO - Gearbox Swivel Hitch w/ Slip Overrunning Clutch
Cutting Height 3/4" to 3" (19mm- 76mm)
Smooth Rock Guards
Top Shield Protector
1-3/8" 21 Spline PTO Shaft
Conditioner Drive -Enclosed Spur Gear with U-Joint Drive Shafts
110" (2.8m) Roller Conditioner Herringbone Steel on Steel Rolls
110" (2.8m) Rubber on Steel Herringbone Rolls Optional
110" (2.8m) Turbulence Reduction Roll
Hydraulic Conditioner Roll Tension
Auto Header Tilt with Lower Feature- Hydraulic Adjust
Roading Lock
Hitch Jack
Hydraulic Tongue Control

Tractor Requirements
120 PTO HP minimum with Fully Enclosed ROPS Cab
Two Double Acting Remote Valves

Order Code	Catalog Number	Description	Factory Code	Approx. Weight(lb)	List Price
ONE ITEM FROM EACH GROUP MUST BE SPECIFIED UNLESS NOTED OTHERWISE					
BASE MACHINE					**GROUP 01**
MF1316S	ACX3494370	1316S Disc Mower Conditioner	M4327092		56,196.00
HAY CONDITIONER (One option must be selected)					**GROUP 02**
H203	700959295	Steel on Steel Conditioning Rolls			**In Base**
H201	700959294	Rubber on Steel Conditioning Rolls			No Charge
CUTTERBAR - KNIFE OPTIONS					**GROUP 03**
K401	ACW9035900	Fixed Blade			**In Base**
K402	ACW9034610	Quick Blade Change	M59213		769.00
HITCH - Required (Can not be ordered Loose)					**GROUP 04**
	700960623M	3-Point Swivel Hitch		295	No Charge
	700960624M	Drawbar Swivel Hitch (Not compatible with Category 4 Drawbar)		280	No Charge
FIELD INSTALLED KITS - (order as desired)					**GROUP 99**
	ACW3837310M	Steel Gauge Wheels	M73689		957.00
	ACW5058070M	Filler Pan	M12089		157.00
	700960605M	Drawbar Hitch Kit*	M174944		2,272.00
	700960610M	3-Point Hitch Kit	M150073		1,949.00
	700963427M	Transit Coating (Factory Applied). (Recommended for shipments occurring in November through March 31ST)	M70532		916.00

***FOR CATEGORY 4 DRAWBAR, ORDER 3-POINT HITCH KIT**

ORDER FROM PARTS					
	700749702	1-3/4" 20 spline PTO Yoke			ORDER FROM PARTS
	700750347	French Operators Manual and Decal Kit		2	No Charge
	700750349	Spanish Operators Manual and Decal Kit		2	No Charge

1393 CENTER PIVOT DISC MOWER CONDITIONER

FOB Hesston, KS

STANDARD EQUIPMENT

RazorEdge™ Welded One-piece Cutterbed
Working Width 13‘ (3.9m)
8 Discs (2450 RPM)
Disc diameter 24.5"
Spur Gear Cutterbed Design Utilizing in House Forged Gears from the AGCO Power Foundry
Swath Width 40" to 96" (1m to 2.4m)
Transport Width 159" (4.0m)
31 x 13.5 x 15 Tires
16 Knives - Swing-away, Reversible
1000 PTO - Gearbox Swivel Hitch w/ Slip Overrunning Clutch
Cutting Height 3/4“ to 3" (19mm- 76mm)
Smooth Rock Guards
Top Shield Protector
1-3/8” 21 Spline PTO Shaft
Conditioner Drive - Enclosed Spur Gear with U-Joint Drive Shafts
110" (2.8m) Roller Conditioner Herringbone Steel on Steel Rolls
110" (2.8m) Rubber on Steel Herringbone Rolls - Optional
110" (2.8m) Turbulence Reduction Roll
Hydraulic Conditioner Roll Tension
Auto Header Tilt with Lower Feature- Hydraulic Adjust
Roading Lock
Hitch Jack
Hydraulic Tongue Control

Tractor Requirements
100 PTO HP minimum with Fully Enclosed ROPS Cab
Two Double Acting Remote Valves

Order Code	Catalog Number	Description	Factory Code	Approx. Weight(lb)	List Price
ONE ITEM FROM EACH GROUP MUST BE SPECIFIED UNLESS NOTED OTHERWISE					
BASE MACHINE					**GROUP 01**
MF1393	ACX3494440	1393 Disc Mower Conditioner	M3759448		48,824.00
HAY CONDITIONER (One option must be selected)					**GROUP 02**
H203	700959295	Steel on Steel Conditioning Rolls			**In Base**
H201	700959294	Rubber on Steel Conditioning Rolls			No Charge
CUTTERBAR - KNIFE OPTIONS					**GROUP 03**
K401	ACW6776220	Fixed Blade			**In Base**
K402	ACW6776230	Quick Blade Change	M47278		614.00
HITCH - Required (Can not be ordered Loose)					**GROUP 04**
	700960623M	3-Point Swivel Hitch		295	No Charge
	700960624M	Drawbar Swivel Hitch (Not compatible with Category 4 Drawbar)		280	No Charge
FIELD INSTALLED KITS - (order as desired)					**GROUP 99**
	700958143M	High Skid Shoes	M29645		385.00
	700960605M	Drawbar Hitch Kit*	M174944		2,272.00
	700960610M	3-Point Hitch Kit	M150073		1,949.00
	700963050M	Filler Pan	M19866		258.00
	700963427M	Transit Coating (Factory Applied) (Recommended for shipments occurring in November through March 31ST)	M70532		916.00
ORDER FROM PARTS					
	700749702	1-3/4" 20 spline PTO Yoke			ORDER FROM PARTS
	700751514	French Operators Manual and Decal Kit		2	No Charge
	700751515	Spanish Operators Manual and Decal Kit		2	No Charge

***FOR CATEGORY 4 DRAWBAR, ORDER 3-POINT HITCH KIT**

HESSTON by MASSEY FERGUSON

1376 CENTER PIVOT DISC MOWER CONDITIONER

FOB Hesston, KS

STANDARD EQUIPMENT

9'10" (2.8m) Disc Mower Conditioner
6 Discs
12 Knives (2 per Discs) Swing- Away Reversible
Cutting Height 3/4" to 3" (19mm- 76mm)
RazorEdge™ Welded One-piece Cutterbed
Spur Gear Cutterbed Design Utilizing in House
Forged Gears from the AGCO Power Foundry
Spring Adjustable Conditioner Roll Tension
Hydraulic Tongue Control
Conditioner Options:
Tine Rolls
Herringbone Steel on Steel Rolls
Herringbone Rubber on Rubber Rolls
Length 73" (1.9m)
Top Door Protector
Swivel Tongue

Tractor Requirements
75 PTO HP minimum with Fully Enclosed ROPS Cab
One Single Acting & One Double Acting Remote Valve

Order Code	Catalog Number	Description	Factory Code	Approx. Weight(lb)	List Price
ONE ITEM FROM EACH GROUP MUST BE SPECIFIED UNLESS NOTED OTHERWISE					
BASE MACHINE					**GROUP 01**
MF1376	ACX3494420	1376 Base Center Pivot Disc Mower Conditioner	M362593		4,709.00
HAY CONDITIONER (One option must be selected)					**GROUP 02**
H203	700963850	Steel on Steel Conditioning Rolls	M2489949		32,337.00
H204	700963851	Rubber on Rubber Conditioning Rolls	M2466002		32,026.00
H206	700956876	Tine Conditioner	M2304225		29,925.00
H200	700957951	Less Conditioner	M2135133		27,729.00
TIRES					**GROUP 03**
B104	700956874	11L x 15 Tires			**In Base**
B106	700958134	31 x 13.5-15 Tires	M32802		426.00
CUTTERBAR - KNIFE OPTIONS					**GROUP 04**
K401	ACW6778650	Fixed Blade			**In Base**
K402	ACW6778660	Quick Blade Change	M35574		462.00
REQUIRED HITCH OPTIONS- (one must be chosen) (Can not be ordered Loose)					**GROUP 05**
	700962931M	Drawbar Hitch, 1000 RPM			No Charge
	700964582M	Drawbar Hitch, 540 RPM			No Charge
	TBA	3-Point Hitch, 1000 RPM	M48510		630.00
	700964583M	3-Point Hitch, 540 RPM	M48510		630.00
FIELD INSTALLED KITS - (order as desired)					**GROUP 99**
	700957954M	Hydraulic Header Tilt	M34804		452.00
	700962485M	Weight Kit	M168553		2,189.00
	700963427M	Transit Coating (Factory Applied) (Recommended for shipments occurring in November through March 31ST)	M70532		916.00
ORDER FROM PARTS					
	700748726	Jack Stand Kit.			ORDER FROM PARTS
	700207097	Aggressive Cage Kit (For improved crop flow)			ORDER FROM PARTS

1373 SIDE PULL DISC MOWER CONDITIONER

FOB Hesston, KS

STANDARD EQUIPMENT

9'10" (2.8m) Disc Mower Conditioner
6 Discs (2220 RPM)
12 Knives (2 per Discs) Swing- Away Reversible
Cutting Height 3/4" to 3" (19mm- 76mm)
RazorEdge™ Welded One-piece Cutterbed
Spur Gear Cutterbed Design Utilizing in House
Forged Gears from the AGCO Power Foundry
Spring Adjustable Conditioner Roll Tension
Hydraulic Tongue Control
Tine Roll Options:
Herringbone Steel on Steel Rolls
Herringbone Rubber on Rubber Rolls
Length 73" (1.9m)
Top Door Protector
540 RPM PTO

Tractor Requirements
75 PTO HP minimum with Fully Enclosed ROPS Cab
One Single Acting & One Double Acting Remote Valve

Order Code	Catalog Number	Description	Factory Code	Approx. Weight(lb)	List Price
ONE ITEM FROM EACH GROUP MUST BE SPECIFIED UNLESS NOTED OTHERWISE					
BASE MACHINE					**GROUP 01**
MF1373	ACX3494400	1373 Side Pull Base Mower Conditioner			**In Base**
HAY CONDITIONER (One option must be selected)					**GROUP 02**
H203	700963850	Steel on Steel Conditioning Rolls	M2489949		32,337.00
H204	700963851	Rubber on Rubber Conditioning Rolls	M2466002		32,026.00
H206	700956876	Tine Conditioner	M2304225		29,925.00
H200	700957951	Less Conditioner	M2135133		27,729.00
CUTTER BAR - KNIFE OPTIONS					**GROUP 03**
K401	ACW6778650	Fixed Blade			**In Base**
K402	ACW6778660	Quick Blade Change	M35574		462.00
TIRES					**GROUP 04**
B104	700956874	11L x 15 Tires			**In Base**
B106	700958134	31 x 13.5-15 Tires	M32802		426.00
FIELD INSTALLED KITS - (order as desired)					**GROUP 99**
	700958379M	Hydraulic Header Tilt	M336190		470.00
	700963427M	Transit Coating (Factory Applied) (Recommended for shipments occurring in November through March 31ST)	M70532		916.00
ORDER FROM PARTS					
	700207097	Aggressive Cage Kit (For improved crop flow)			ORDER FROM PARTS

1359 DISC MOWER CONDITIONER

FOB Hesston, KS

STANDARD EQUIPMENT

Cutting Width 9'3" (2.8m)
Mowing Elements- 7 Disc
Reversible Knives
540 RPM, 80 Degrees C.V. PTO Drive Shaft
Hydraulic Tongue Control
Mechanical Tongue Transport Lock
Hardened Skid Shoes
84" (2.1m) Conditioner Options:
  Rubber on Rubber - Powered Roll Opening
  Steel on Steel - Spring Tensioned
Adjustable Roll Tension
9.5L x 14 6 ply Flotation Tires
Highway Transport Chain
Overrunning / Slip Clutch Protection
3-Point Header Suspension

Tractor Requirements
60 PTO HP minimum with Fully Enclosed ROPS Cab
One Single Acting, One Double Acting Remote Valve

Order Code	Catalog Number	Description	Factory Code	Approx. Weight(lb)	List Price
ONE ITEM FROM EACH GROUP MUST BE SPECIFIED UNLESS NOTED OTHERWISE					
BASE MACHINE					**GROUP 01**
MF1359	ACX3494380	1359 Mower Conditioner			**In Base**
HAY CONDITIONER					**GROUP 02**
H203	700956886	Steel on Steel Conditioning Rolls	M2348346		30,498.00
H204	700956331	Rubber on Rubber Conditioning Rolls	M2410793		31,309.00
FIELD INSTALLED KITS - (order as desired)					**GROUP 99**
	MKD11177	2" (.1m) Topping Skids (Set of 4)	M20020	20	260.00
	MK11176	Lighting Package	M48510		630.00
	700963426M	Transit Coating (Factory Applied) (Recommended for shipments occurring in November through March 31ST)	M80619		1,047.00
ORDER FROM PARTS					
	700730707	French Operators Manual and Decal Kit		2	No Charge
	700730708	Spanish Operators Manual and Decal Kit		2	No Charge

REAR / FRONT 3-POINT HITCH MOUNTED MOWER

PRODUCT INFORMATION

FOB Port of Entry

	(Rear) DM9314 Subject to Availability	(Rear) DM9614 TL	(Rear) DM8312 TL-RC (Roller Conditioner)
Width of Cut	30' 6" (9.3m)	31' 6" (9.6m)	27' 3" (8.3m)
Number of Disc	2 x 7	2 x 7	2 x 6
Windrow Swath Width	2 x 8' 2" (2 x 2.50m)	2 x 7' 6" (2.3m) (2 x 2.50m)	2 x 4' 9" - 7' 4" (2 x 1.55 - 1.90m)
Weight	4675 (2,120kg)	4000 (1850kg)	5529 (2,508kg)
Horsepower (minimum requirements) (with Front Mower)	175 HP	215 HP	200 HP
PTO (RPM)	1000 PTO RPM	1000 PTO RPM	1000 PTO RPM
Hitch	Rear 3pt- Cat II & III	Rear 3pt- Cat II & III	Rear 3pt- Cat II & III
Hydraulic Requirements	2 Single Acting, 1 Double Acting	2 Single Acting, 1 Double Acting	2 Single Acting, 1 Double Acting
Assembly Time	6 Hours	6 Hours	8 Hours

	(Front) DM316FQ / -RC (Roller Conditioner)	(Front) DM367FQ / -RC (Roller Conditioner)
Width of Cut	10' 2" (3.1m)	11' 8" (3.6m)
Number of Disc	6	7
Windrow Swath Width	5' 11" (1.80m) / 3' 11" - 5' 11" (1.20 - 1.8m)	7' 6" (2.30m) / 5' 7" -7' 6" (1.70 - 2.30m)
Weight	2094 (950kg) / 2729 (1,238kg)	2248 (1,020kg) / 2809 (1,274kg)
Horsepower (minimum requirements)	85 HP / 115HP	95 HP / 130 HP
PTO (RPM)	1000 PTO RPM	1000 PTO RPM
Hitch	Front 3pt with PTO- Cat II	Front 3pt with PTO- Cat II
Hydraulic Requirements	1 Single Acting, 1 Double Acting	1 Single Acting, 1 Double Acting
Assembly Time	Assembled	Assembled

NOTE: This is a general sales guide; for further product details and official specifications refer to product information guides and product literature.

MASSEY FERGUSON®

DM9314 REAR MOWER

FOB Port of Entry

STANDARD EQUIPMENT

Working Width: 30' 6" (9.3m)
Swath width: 2 x 8' 3" (2 x 2.5m)
Transport Width: 9' 1" (2.8m)
Transport Height: 12'10" (3.9m)
2 x 7 Disc
1000 RPM PTO
1 3/8" 21 Spline PTO yoke
Hitch Category: II and III
Turbo Lift Hydraulic Mower Flotation
Compact Modular Angle Cutterbar
Safety Swing Break-away Protection
Main Drives: Gearboxes and drive shafts
Overrunning Clutch
Drive GUARD Individual Disc Protection
Massey Ferguson Decal on Curtains
Quick Change Reversible Knives

Tractor Requirements (with Front Mower):
175 HP
Load Sensing Hydraulics or 2 SAV, 1 DAV for Rear Mower
Plus 1 DAV and 1 SAV for Front Mower

PRIOR MODEL YEAR INVENTORY WILL BE CONSUMED BEFORE PRODUCTION OF NEW MODELS BEGINS AND CAN BE ACCESSED VIA THE BARGAIN LIST ON THE DEALER PORTAL .

Order Code	Catalog Number	Description	Factory Code	Approx. Weight(lb)	List Price
BASE MACHINE					**GROUP 01**
DM9314	700961848	Rear 3-Point Hitch Mounted Mower without Conditioner	M3827824		49,712.00
ORDER FROM PARTS					
	72623617	Additional Skid (Increases cutting height to 2.2" to 3.1" depending on spacers used- order at least 2 per cutterbar)			ORDER FROM PARTS
	FEL429871	Mower Disc with Conveyor Wings (Aggressive rotor for improved feeding in heavy crop- order 2 per cutterbar) .			ORDER FROM PARTS
	TBA	Protective Cover ◆			ORDER FROM PARTS

◆For use on the tine conditioner models while operating with conditioner removed

SUBJECT TO AVAILABILITY

DM9614 REAR MOWER

FOB Port of Entry

STANDARD EQUIPMENT

Working Width: 31’ 6" (9.6m)
Swath width: 2 x 7’ 6" (2x 2.3m)
Transport Width: 9' 1” (2.8m)
Transport Height: 12'10” (3.9m)
2 x 7 Disc
1000 RPM PTO
1 3/8” 21 Spline PTO yoke
Hitch Category: II and III
Turbo Lift Hydraulic Mower Flotation
RazorEdge™ Cutterbar
Safety Swing Break-away Protection
Main Drives: Gearboxes and drive shafts
Overrunning Clutch
Drive GUARD Individual Disc Protection
Massey Ferguson Decal on Curtains
Quick Change Reversible Knives

Tractor Requirements (with Front Mower):
215 HP
Load Sensing Hydraulics or 2 SAV, 1 DAV for Rear Mower
Plus 1 DAV and 1 SAV for Front Mower

PRIOR MODEL YEAR INVENTORY WILL BE CONSUMED BEFORE PRODUCTION OF NEW MODELS BEGINS AND CAN BE ACCESSED VIA THE BARGAIN LIST ON THE DEALER PORTAL .

Order Code	Catalog Number	Description	Factory Code	Approx. Weight(lb)	List Price
BASE MACHINE					**GROUP 01**
DM9614	700965244	Rear 3-Point Hitch Mounted Mower without Conditioner	M4042115		52,495.00

MASSEY FERGUSON®

DM8312 TL-RC REAR MOWER

FOB Port of Entry

STANDARD EQUIPMENT

Working Width: 27' 2" (8.3m)
Swath Width: 2 x 5' 9" to 8' 5" (2 x 1.8m to 2.6m)
Transport Width: 9' 1" (2.8m)
Transport Height: 12'2" (3.73m)
2 Blades x 6 Discs
1000 RPM PTO
1 3/8" 21 Spline PTO yoke
Hitch Category: II and III
Turbo Lift Hydraulic Mower Flotation
Compact Modular Angle Cutterbar
Safety Swing Break-away Protection
Main Drives: Gearboxes and Drive Shafts
Overrunning Clutch
Drive GUARD Individual Disc Protection
Massey Ferguson Decal on Curtains
Quick Change Reversible Knives
Mower Disc With Conveyor Wings

Tractor Requirements (with Front Mower):
200 HP (Rubber on Rubber Conditioner)
Load Sensing Hydraulics or 2 SAV
1 DAV for Rear Mower Plus 1 DAV and 1 SAV for Front Mower

PRIOR MODEL YEAR INVENTORY WILL BE CONSUMED BEFORE PRODUCTION OF NEW MODELS BEGINS AND CAN BE ACCESSED VIA THE BARGAIN LIST ON THE DEALER PORTAL .

Order Code	Catalog Number	Description	Factory Code	Approx. Weight(lb)	List Price
BASE MACHINE					**GROUP 01**
DM8312	700961770	Rear 3-Point Hitch Mounted Mower with Rubber Conditioners.	M5116342		66,446.00

DM316FQ / DM367FQ
FRONT MOWERS

FOB Port of Entry

STANDARD EQUIPMENT

1000 RPM PTO
Overrunning Clutch
3-D Headstock with Trailing Linkage
Carrier Chains
TurboLift Flotation
RazorEdge™ Welded One-piece Cutterbed
Spur Gear Cutterbed Design Utilizing in House
Forged Gears from the AGCO Power Foundry
Adjustable Cutting Height: 1.5” to 2.8” (0m to .1m)
Header Lift Height: 18” (.45m)
Header Suspension Travel: 25” (.65m)
Lateral Tilt: 26.4 Degrees
Drive GUARD Individual Disc Protection
Massey Ferguson Decal on Curtains
Quick Change Reversible Knives
Mower Disc with Wings on Non-Conditioner Models
Optional Rubber on Rubber Conditioner Rolls (-RC)

DM316FQ
Working Width: 10' 2" (3.1m)
Swath Width: 5' 11” (1.8m) (No Conditioner)
3' 11” to 5' 11” (1.2m to 1.8m) (Roller Conditioner)
Transport Width: 8' 2” (2.5m)
Transport Length: 6' 9” (2.05m)
6 Disc
Hydraulic Side Shift: 8” (.2m) Right and Left

DM367FQ
Working Width: 11' 8" (3.6m)
Swath Width: 7' 6” (2.3m) (No conditioner)
5' 7” to 7' 6” (1.7m to 2.3m) (Roller Conditioner)
Transport Width: 9' 2” (2.8m)
Transport Length: 6' 9” (2.05m)
7 Disc

Tractor Requirements:
85 / 95 HP (No Conditioner)
115 / 130 HP (Roller Conditioner)
1 DAV, 1 SAV
Front 3-Point Hitch
Front 1000 RPM PTO
1 3/8” 21 Spline PTO

PRIOR MODEL YEAR INVENTORY WILL BE CONSUMED BEFORE PRODUCTION OF NEW MODELS BEGINS AND CAN BE ACCESSED VIA THE BARGAIN LIST ON THE DEALER PORTAL .

Order Code	Catalog Number	Description	Factory Code	Approx. Weight(lb)	List Price
ONE ITEM FROM EACH GROUP MUST BE SPECIFIED UNLESS NOTED OTHERWISE					
BASE MACHINE					**GROUP 01**
DM316FQ	700209046	3.1M Front 3-Point Hitch Mounted Mower with Rubber Roll Conditioner	M2462229		31,977.00
DM316FQ	700209045	3.1M Front 3-Point Hitch Mounted Mower without Conditioner	M1772925		23,025.00
DM367FQ	700209048	3.6M Front 3-Point Hitch Mounted Mower with Rubber Roll Conditioner	M2541000		33,000.00
DM367FQ	700209047	3.6M Front 3-Point Hitch Mounted Mower without Conditioner	M1898589		24,657.00

***Note: DM316FQ or DM367FQ can be ordered separately or used in conjunction with the DM9614 or DM8312 Rear Mower or a pull type Disc Mower Conditioner.**

MASSEY FERGUSON®

DISC MOWERS
PRODUCT INFORMATION
FOB Port of Entry

Professional Series

	DM357	DM306	DM255
Width of Cut	11' 6" (3.5m)	9' 10" (3.0m)	8' 4" (2.55m)
Number of Discs	7	6	5
Swath Width:			
No Conditioner	7' 7" (2.3m)	5' 11" (1.8m)	5' 3" (1.6m)
Tine Conditioner	N/A	2' 11"- 6' 3"(1.35-1.9m)	2' 11"- 4' 7" (0.9-1.4m)
Roller Conditioner	N/A	N/A	3' 5" - 4' 7" (1.05- 1.4m)
Minimum HP Requirement			
No Conditioner	68 HP	61 HP	54 HP
With Conditioner	N/A	86 HP	75 HP
PTO (RPM)	540 RPM	540 RPM	540 RPM
Hitch	3 pt- Cat I & II	3 pt- Cat I & II	3 pt- Cat I & II
Weight:			
No Conditioner	1760 (798kg)	1596 (724kg)	1389 (630kg)
Tine Conditioner	N/A	2229 (1,011kg)	1947 (883kg)
Roller Conditioner	N/A	N/A	2161 (980kg)
Assembly Time	4 Hours	4 Hours	4 Hours

Farmer Series

	DM287	DM246	DM205	DM164
Width of Cut	9'3" (2.82m)	7'11" (2.42m)	6'9" (2.06m)	5'5" (1.66m)
Number of Discs	7	6	5	4
Swath Width:				
No Conditioner	6' 7" (2.0m)	5' 5" (1.65m)	4' 1" (1.25m)	2' 11"' (0.9m)
Minimum HP Requirement				
No Conditioner	60 HP	50 HP	41 HP	30 HP
PTO (RPM)	540 RPM	540 RPM	540 RPM	540 RPM
Hitch	3 pt- Cat I & II	3 pt- Cat I & II	3 pt- Cat I & II	3 pt- Cat I & II
Weight:				
No Conditioner	1047 (475kg)	964 (437kg)	897 (407kg)	820 (372kg)
Assembly Time	4 Hours	4 Hours	4 Hours	4 Hours

NOTE: This is a general sales guide; for further product details and official specifications refer to product information guides and product literature.

Note: These Mowers Are Intended For Agricultural Use Only. They are Not Intended For Roadside Or Municipal Mowing

DM357 / DM306 / DM255

PROFESSIONAL SERIES DISC MOWERS

FOB Port of Entry

STANDARD EQUIPMENT

Compact Modular Angle Gear Cutterbar
Spring-Loaded Anti-Collision Device
Cutterbar Drive Protection
Common Oil Reservoir
Lifetime Cutterbar Oil
PTO Shaft with Overrunning Clutch
Heavy Duty Skid Plate
Heavy Duty Main Frame
Hydraulic Lift Cylinder
Drive GUARD Cutterbar Protection
Massey Ferguson Decal on Curtains
Quick Change Reversible Knives
Swath Disc (Right)

Note: These Mowers Are Intended For Agricultural Use Only. They are Not Intended For Roadside Or Municipal Mowing

PRIOR MODEL YEAR INVENTORY WILL BE CONSUMED BEFORE PRODUCTION OF NEW MODELS BEGINS AND CAN BE ACCESSED VIA THE BARGAIN LIST ON THE DEALER PORTAL .

Order Code	Catalog Number	Description	Factory Code	Approx. Weight(lb)	List Price
		ONE ITEM FROM EACH GROUP MUST BE SPECIFIED UNLESS NOTED OTHERWISE			
BASE MACHINE					**GROUP 01**
MFDM357	700961851	Disc Mower with 7 Disc and 11'6" (3.5m) Cut.	M1348655		17,515.00
MFDM306	700961850	Disc Mower with 6 Disc and 9'10" (2.8m) Cut.	M1080002		14,026.00
MFDM255	700961849	Disc Mower with 5 Disc and 8'4" (2.6m) Cut.	M989989		12,857.00
ORDER FROM PARTS					
	FEL430087	Swath Disc (left) for DM255, DM306			ORDER FROM PARTS
	72652970	Swath Guide (left) for DM357			ORDER FROM PARTS
	72623617	Adjustable High Skid (qty 5) for DM255 . . . . . Adjustable High Skid (qty 6) for DM306 Adjustable High Skid (qty 7) for DM357			ORDER FROM PARTS
	FEL429871	Mower Disc with Conveyor Wings (Aggressive rotor for improved . in heavy crop- order 2 per cutterbar to replace outside disc)			ORDER FROM PARTS
	72659337	Tine Conditioner for DM306			ORDER FROM PARTS
	72659333	Tine Conditioner for DM255			ORDER FROM PARTS
	72659335	Roller Conditioner for DM255			ORDER FROM PARTS
	FEL429989	Spreader Device for DM255 . . . . . Attaches to Tine Conditioner for Increased Swath Spread			ORDER FROM PARTS
	TBA	Spreader Device for DM306 . . . . . Attaches to Tine Conditioner for Increased Swath Spread			ORDER FROM PARTS
	72659331	Stone Guard for DM255 . . . . . Attaches to Roller Conditioner to Protect Fixed Bottom Rubber Roller			ORDER FROM PARTS
	FEL428929	Quick Hitch Adapter Kit (Cat II).			ORDER FROM PARTS

MASSEY FERGUSON®

DM287 / DM246 / DM205 / DM164
FARMER SERIES DISC MOWERS

FOB Port of Entry

STANDARD EQUIPMENT

Spur Gear Cutterbar
Spring-Loaded Anti-Collision Device
Folding Curtains
Parking Stand
Hydraulic Lift Cylinder
PTO Shaft with Overrunning Clutch
Swath Disc Right
Cat I and II Hitch
Cutterbar Drive Protection
Common Oil Bath
Solid Frame with Exterior Support
Massey Ferguson Decal on Curtains

Note: These Mowers Are Intended For Agricultural Use Only. They are Not Intended For Roadside Or Municipal Mowing

PRIOR MODEL YEAR INVENTORY WILL BE CONSUMED BEFORE PRODUCTION OF NEW MODELS BEGINS AND CAN BE ACCESSED VIA THE BARGAIN LIST ON THE DEALER PORTAL .

Order Code	Catalog Number	Description	Factory Code	Approx. Weight(lb)	List Price
ONE ITEM FROM EACH GROUP MUST BE SPECIFIED UNLESS NOTED OTHERWISE					
BASE MACHINE					**GROUP 01**
MFDM287	700963692	Disc Mower with 7 Disc and 9'3" (2.8m) Cut.	M920381	1047	11,953.00
MFDM246	700963691	Disc Mower with 6 Disc and 7'11" (2.2m) Cut.	M828674	963	10,762.00
MFDM205	700963790	Disc Mower with 5 Disc and 6'9" (2.1m) Cut.	M738661	897	9,593.00
MFDM164	700963789	Disc Mower with 4 Disc and 5'5" (1.7m) Cut.	M627319	820	8,147.00

ORDER FROM PARTS

FEL42998709	Swath Guide (left) DM164, DM205, DM246	ORDER FROM PARTS
TBA	Swath Guide (left) for DM287	ORDER FROM PARTS
FEL425927	Welded-on Skid (Quantity of one per Disc is Required for Rocky Conditions)	ORDER FROM PARTS
FEL428928	Quick Hitch Adapter Kit. (Cat II - Cat III NARROW)	ORDER FROM PARTS
FEL134764	High Cutting Skid	ORDER FROM PARTS
FEL134765	High Cutting Skid	ORDER FROM PARTS
FEL134768	High Cutting Skid (Increases Cut Height by 2") (One of Each Must be Ordered to Reach High Skid Capabilities)	ORDER FROM PARTS

MASSEY FERGUSON®

Reserved

MASSEY FERGUSON®

RAKES AND TEDDERS

MASSEY FERGUSON®

V - WHEEL RAKES

FOB Marshfield, Wisconsin

PRODUCT INFORMATION

	1512	1512S	1510	1510S	1508
Rake Wheels	12	12	10	10	8
Working Widths	20' (6.1m) to 24' (7.3m)	20' (6.1m) to 24' (7.3m)	18' (5.5m) to 22' (6.7m)	18' (5.5m) to 22' (6.7m)	15' (4.6m) to 19' (5.8m)
Transport Width	9'6" (2.9m)	12 (3.6m)	9'6" (2.9m)	10'8" (3.3m)	8'6" (2.6m)
Transport Length	18'(5.5m)	21'6" (6.7m)	15' 6"(4.8m)	19' (5.7m)	13' (4m)
Adjustment Width	4' (1.2m) to 6' (1.8M)	4' (1.2m) to 6' (1.8M)	4' (1.2m) to 6' (1.8M)	4' (1.2m) to 6' (1.8M)	3' (.91m) to 5' (1.5M)
Weight (lbs.)	1440	1860	1275	1670	1125

STANDARD EQUIPMENT

55" (1.4m) Diameter Wheels (1508,1510,1512)
40 Teeth per Wheel, 7 mm Tooth Diameter (1508,1510,1512)
60" (1.5m) Diameter Wheels (1510S,1512S)
40 Teeth per Wheel, 7.5 mm Tooth Diameter (1510S,1512S)
Hydraulic Lift for Raising Rake Wheels
Wheel Hubs with Tapered Roller Bearings and Dust Covers
2 Gauge/Transport Wheels
3 Positions for Raking (1508, 1510, 1512)
10 Positions for Raking (1510S, 1512S)
Variable Windrow Width from 36" to 60" (1508)
Variable Windrow Width from 48" to 72" (1.2m to 1.8m)
Hydraulic Fold
175/80 x 13 Tires - 1508, 1510 & 1512
205/75D15 Tires - 1510S & 1512S
Safety Chains
Jack

Order Code	Catalog Number	Description	Factory Code	Approx. Weight(lb)	List Price
ONE ITEM FROM EACH GROUP MUST BE SPECIFIED UNLESS NOTED OTHERWISE					
BASE MACHINE					**GROUP 01**
MF1512	71436081	12 Wheel V-Rake.	M712327	1440	9,251.00
MF1512S	71482578	12 Super Wheel V-Rake, 10 Raking Positions with Transport . .	M783552	1860	10,176.00
MF1510	71436080	10 Wheel V-Rake.	M636790	1275	8,270.00
MF1510S	71482577	10 Super Wheel V-Rake, 10 Raking Positions with Transport . .	M700392	1670	9,096.00
MF1508	71436079	8 Wheel V-Rake.	M592823	1125	7,699.00
FIELD INSTALLED KITS - (order as desired)					**GROUP 99**
	MK31236	Center Kicker Wheels Kit (For use with 1510 and 1512 only). .	M63679		827.00
	71482581	Center Kicker Wheels Kit (For use with 1510S & 1512S only). .	M68761		893.00

MASSEY FERGUSON®

BI-FOLD WHEEL RAKES

FOB Marshfield, Wisconsin

PRODUCT INFORMATION

HI-CAPACITY MODELS

	3986	3983
Raking		
-Positions	Infinite	Infinite
-Widths (ft)	Up to 28' (8.5m)	Up to 24' (7.3m)
Windrow		
-Widths (in)	38" to 58"	38" to 58"
-Widths (m)	(1.0m to 1.5m)	(1.0m to 1.5m)
Frame Fold	Hydraulic	Hydraulic
No. of Finger Wheels	14	12
Transport Wheels	6	4
DIMENSIONS and WEIGHTS		
Transport Width	8'6" (2.6m)	8'6" (2.6m)
Overall Length	27' 3" (8.3m)	24' 6" (7.5m)
TRACTOR REQUIREMENTS		
Horsepower (min.)	40 HP (30 kw)	30 HP (22 kw)
Hydraulics	One Double Acting Remote and One Single Acting Remote	One Double Acting Remote and One Single Acting Remote

STANDARD EQUIPMENT

40 Teeth per Wheel
55" (1.4m) Diameter Wheels
Hydraulic Fold
6.70-15" (.2m to .4m) Tires
Transport Lights
Hydraulic Lift for Raising Rake Wheels
Wheel Hubs with Tapered Roller Bearings
Jack
Safety Chain

Order Code	Catalog Number	Description	Factory Code	Approx. Weight(lb)	List Price
ONE ITEM FROM EACH GROUP MUST BE SPECIFIED UNLESS NOTED OTHERWISE					
BASE MACHINE					**GROUP 01**
MF3986	71436083	3986 Bi-Fold Rake, 14 Wheel	M1836835	3800	23,855.00
MF3983	71436082	3983 Bi-Fold Rake, 12 Wheel	M1467928	3500	19,064.00
FIELD INSTALLED KITS - (order as desired)					**GROUP 99**
	MK31238	Walking Beam Rear Wheel Kit (For use with MF3983)	M130130	175	1,690.00
	MK31250	Center Kicker Wheels Kit (Set of 2) (For use with MF3983)	M198968		2,584.00
	MK31251	Center Kicker Wheels Kit (Set of 2) (For use with MF3986)	M198968		2,584.00
	MK31239	Side Support Gauge Wheels Kit (Set of 2) (For use with MF3986)	M161931		2,103.00
	MK31240	Wind Panel Kit (Order one kit per wheel). (For use with MF3983 and MF3986)	M08932		116.00
	MK31241	2 Wheel Expansion Kit (For use with MF3986) (To Convert a 14 Wheel Rake to a 16 Wheel Rake)	M168322		2,186.00

ROTARY RAKES
PRODUCT INFORMATION

FOB Baltimore, Maryland

	RK662 SD TRC	RK451T	RK361
Working Width: Single Windrow 2 Windrows	 19' (5.8m) 21.6' (6.6m)	 14.8' (4.5m)	 11.8' (3.6m)
Swath Width	2' - 6' 3" (0.6-1.9m)	2'6" - 5'3" (0.76- 1.6m)	2' - 4' 11" (0.6- 1.5m)
Horsepower Min.	26	41	27
Transport Width (Without Tine Arms In)	9' 9" (2.97m)	6' 11" (2.1m)	5' 1" (2.1m)
Transport Length Transport Height (Dismounted Tine Arms)	21' 9" (6.65m) 9' 10"/ 11' 10" (3.0/3.6m)	13' 5" (4.1m) N/A	7' 3" (2.21m) N/A
Hitch	3 pt- Cat I & II	Drawbar	3 pt- Cat I & II
Rotor Delivery	Right Side Delivery or Center & Right Side Delivery	Right Side Delivery	Right Side Delivery
Number of Rotors Tine Arms per Rotor	2 10 and 12	1 12	1 10
Tractor Hydraulics	1 Single Acting	1 Single Acting	None
Assembly Time	9 Hours	3 Hours	2 Hour

STANDARD EQUIPMENT
Three Position Swath Curtain
Parking Stand
Safety Guards and SMV Sign
Transport Safety Chain
Electrical Lighting
Swath Former (RK662)

Tractor Requirements:
Tractor with 540 PTO
Rollover Protective Structure (ROPS) and seat belt
Recommended to run in float position

PRIOR MODEL YEAR INVENTORY WILL BE CONSUMED BEFORE PRODUCTION OF NEW MODELS BEGINS AND CAN BE ACCESSED VIA THE BARGAIN LIST ON THE DEALER PORTAL .

Order Code	Catalog Number	Description	Factory Code	Approx. Weight(lb)	List Price
ONE ITEM FROM EACH GROUP MUST BE SPECIFIED UNLESS NOTED OTHERWISE					
BASE MACHINE					**GROUP 01**
MFRK662	700963783	RK662 3-Point Rotary Rake with 3 pt- Cat I & II	M2395778		31,114.00
MFRK451T	700963776	RK451T Pull Type Rotary Rake with Drawbar	M1047354	1190	13,602.00
MFRK361	700963782	RK361 3-Point Rotary Rake with 3 pt- Cat I & II	M619311		8,043.00

MASSEY FERGUSON®

ROTARY RAKES
PRODUCT INFORMATION

FOB Port of Entry

	RK1002T	RK842P SD TRC PRO	RK802 PRO	RK772
Working Width: Single Windrow 2 Windrows	32.8' (10m)	25.6' (7.8m) 27.6' (8.4m)	26.2' (8m)	21.7' (6.6m) 25.3' (7.7m)
Swath Width	4' 3"- 7' 3" (1.3-2.2m)	2' - 6' (.6m - 1.9m)	3' 11"- 6' 7" (1.2 - 2.2m)	2' - 6' 3" (0.6 - 1.9m)
Horsepower Min.	70	60	48	41
Transport Width (Without Tine Arms In)	9' 5" (2.87m)	9' 7" (2.96m)	9' 9" (2.98m)	9' 10" (3.0m)
Transport Length	21' 4" (6.49m)	29' (8.54m)	17' 7" (5.35m)	24' 5" (7.45m)
Transport Height (Dismounted Tine Arms)	12' 8" (3.85m)	11' 8" (3.6m)	11' 10' (4.5m)	12' (3.65m)
Hitch	3 pt- Cat II	3 pt- Cat II	3 pt- Cat I & II	3 pt- Cat I & II
Rotor Delivery	Center Delivery	Right Side Delivery or Center & Right Delivery	Center Delivery	Right Side Delivery or Center & Right Delivery
Number of Rotors	2	2	2	2
Tine Arms per Rotor	15 on each	13 on each	12 on each	12 on each
Tractor Hydraulics	1 Single Acting	1 Double Acting 1 Double Acting	1 Single Acting With Float	1 Single Acting
Assembly Time	6 Hours	8 Hours	10 Hours	10 Hours

STANDARD EQUIPMENT
Three Position Swath Curtain
Transport Chassis
Parking Stand
Safety Guards and SMV Sign
Transport Safety Chain
Electrical Lighting
Tandem Axles on Rotor Chassis
2 Bogie Wheels 380/55-17 for RK1002T & RK842 PRO
Front Rotor Swath Former for 2 Swath Delivery (RK772 & RK842P)
Individual Lifting Device (RK802P)
Hydraulic Width Adjust for (RK802P)

Tractor Requirements:
Tractor with 540 PTO
Rollover Protective Structure (ROPS) and Seat Belt
Recommended to Run in Float Position

PRIOR MODEL YEAR INVENTORY WILL BE CONSUMED BEFORE PRODUCTION OF NEW MODELS BEGINS AND CAN BE ACCESSED VIA THE BARGAIN LIST ON THE DEALER PORTAL .

Order Code	Catalog Number	Description	Factory Code	Approx. Weight(lb)	List Price
ONE ITEM FROM EACH GROUP MUST BE SPECIFIED UNLESS NOTED OTHERWISE					
BASE MACHINE					**GROUP 01**
MFRK1002T	700961843	RK1002T Mounted Rotary Rake	M4122888		53,544.00
MFRK842P	700963734	RK842P SD TRC Pro Rotary Rake	M3998225		51,925.00
MFRK802P	700963779	RK802 Pro Mounted Rotary Rake	M2921380	4409	37,940.00
MFRK772	700963781	RK772 Mounted Rotary Rake	M2676982	4629	34,766.00

ORDER FROM PARTS

7268156	Spare Wheel 16/6.50-8 w/support (RK772, RK842P)	ORDER FROM PARTS
FEL499567	Individual Lifting Device (RK802P)	ORDER FROM PARTS
TBA	Front Rotor Swath Former for 2 Swath Delivery . . . . . (Standard Equipment on MY20 & Prior RK772 & RK842P)	ORDER FROM PARTS
72659329	Spare Wheel 18/8.50-8 with support (RK802P).	ORDER FROM PARTS
72663140	Hydraulic Width Adjust for RK802P.	ORDER FROM PARTS

PULL-TYPE TEDDERS

PRODUCT INFORMATION

FOB Port of Entry

	TD 776 X DN	TD 1028 X TRC	TD 1310 X TRC
Tedding Width	25' 3" (7.7m)	33' 6" (10.2m)	41' (12.5m)
Transport Width	9' 7" (2.95m)	9' 10" (3.0m)	9' 10" (3.0m)
Transport Length	7' 2" (2.2m)	17' (5.2m)	22' (6.7m)
Rotors	6	8	10
Arms / Rotors	6	7	7
Tires / Wheels: 16 / 6.50 380 / 55-17	6	8 2	10 2
Horsepower (Min PTO)	54 HP	75 HP	90 HP
Hitch	3 PT Mounted	2 PT Trailed	2 PT Trailed
Transport	None	Transport Chassis	Transport Chassis
Hydraulic Requirements	1 Double Acting	2 Double Acting	2 Double Acting
Assembly Time	10 Hours	12 Hours	12 Hour

STANDARD EQUIPMENT
540 RPM PTO
Parking Jack
Safety Chain (Pull Type Units)
SMV Sign
Drive Protection Clutch
Galvanized Tine Arms
Hook Tines
Tine Saver
Wide Angle PTO Shaft on Trailed Models

Tractor Requirements:
Remotes as listed above Tractor with 540 PTO

Order Code	Catalog Number	Description	Factory Code	Approx. Weight(lb)	List Price
ONE ITEM FROM EACH GROUP MUST BE SPECIFIED UNLESS NOTED OTHERWISE					
MFTD776XDN	700965241	6 Rotor, 25' 3" (7.7m) 3 PT Mounted Tedder.	M1968890		25,570.00
MFTD1028XT	700965242	8 Rotor, 33' 6" (10.2m) 2 PT Trailed Transport Chassis Tedder .	M3349500		43,500.00
MFTD1310XT	700965243	10 Rotor, 41' (12.5m) 2 PT Trailed Transport Chassis Tedder . .	M4579190		59,470.00

MASSEY FERGUSON®

PULL-TYPE TEDDERS

PRODUCT INFORMATION

FOB Port of Entry

	TD1310	TD1008
Tedding Width	41' 8" (12.7m)	33' 06" (10.2m)
Transport Width	9' 8" (2.94m)	9' 8" (2.94m)
Transport Length	18' 8" (5.7m)	18' 8" (5.7m)
Transport Height	8' 5" (2.56m)	8' 5" (2.56m)
Rotors	10	8
Arms / Rotors	6	6
Wheels:		
16 / 6.50-8	8	6
18 / 8.50-8	2	2
Horsepower (min. PTO)	61 HP	48 HP
Hitch	Drawbar	Drawbar
Transport	Transport Chassis	Transport Chassis
Hydraulic Requirements	1 Single Acting 1 Double Acting	1 Single Acting 1 Double Acting
Assembly Time	7 Hours	7 Hours

STANDARD EQUIPMENT

540 RPM PTO
Parking Jack (Pull Type Hitch)
Safety Chain (Pull Type Units)
SMV Sign
Drive Protection Clutch
Galvanized Tine Arms
Super C Tines
Tine Saver
Wide Angle PTO Shaft for TD776T

Tractor Requirements:
One Single Acting Hydraulic Remote
(2DAV for TD1008 and TD1310)
Tractor with 540 PTO

PRIOR MODEL YEAR INVENTORY WILL BE CONSUMED BEFORE PRODUCTION OF NEW MODELS BEGINS AND CAN BE ACCESSED VIA THE BARGAIN LIST ON THE DEALER PORTAL .

Order Code	Catalog Number	Description	Factory Code	Approx. Weight(lb)	List Price
ONE ITEM FROM EACH GROUP MUST BE SPECIFIED UNLESS NOTED OTHERWISE					
MFTD1310	700963775	10 Rotor, 41' (12.7m), Drawbar, Transport Chassis Tedder.	M3120117		40,521.00
MFTD1008	700963772	8 Rotor, 33' (10.2m), Drawbar, Transport Chassis Tedder.	M2641485		34,305.00

PULL-TYPE TEDDERS

PRODUCT INFORMATION

FOB Port of Entry

	TD776T	TD524T	TD252
Tedding Width	25' 3" (7.7m)	17' 1" (5.2m)	8' 2" (2.5m)
Transport Width	9' 10" (3.0m)	9' 10" (3.0m)	9' 10" (3.0m)
Transport Length	14' 8" (4.48m)	10' 2" (3.1m)	10' 2" (3.1m)
Transport Height	9' 6" (2.9m)	8' 6" (2.6m)	N/A
Rotors	6	4	2
Arms / Rotors	6	6	6
Wheels:			
16 / 6.50-6			2
16 / 6.50-8	4	4	
18 / 8.50-8	2		
Horsepower (min. PTO)	41 HP	30 HP	20 HP
Hitch	Drawbar	Drawbar	Drawbar
Transport	Transport Chassis	Hydraulic Vertical Fold	None
Hydraulic Requirements	1 Single Acting	1 Single Acting	None
Assembly Time	4 Hours	2.5 Hours	2.5 Hours

STANDARD EQUIPMENT

540 RPM PTO
Parking Jack (Pull Type Hitch)
Safety Chain (Pull Type Units)
SMV Sign
Drive Protection Clutch
Galvanized Tine Arms
Super C Tines
Tine Saver
Wide Angle PTO Shaft for TD776T

Tractor Requirements:

One Single Acting Hydraulic Remote Tractor with 540 PTO

PRIOR MODEL YEAR INVENTORY WILL BE CONSUMED BEFORE PRODUCTION OF NEW MODELS BEGINS AND CAN BE ACCESSED VIA THE BARGAIN LIST ON THE DEALER PORTAL .

Order Code	Catalog Number	Description	Factory Code	Approx. Weight(lb)	List Price

ONE ITEM FROM EACH GROUP MUST BE SPECIFIED UNLESS NOTED OTHERWISE

Note: TD252 must be ordered and shipped in multiples of 2.

BASE MACHINE **GROUP 01**

MFTD776T	700963771	6 Rotor, 25' (7.7m), Drawbar, Transport Chassis Tedder.	M1816738		23,594.00
MFTD524T	700963690	4 Rotor, 17' (5.2m), Drawbar, Hydraulic Vertical Fold, Tedder.	M786786	1223	10,218.00
MFTD252	700963767	2 Rotor, 8' (2.5m), Drawbar, Tedder	M286055	513	3,715.00

HESSTON by MASSEY FERGUSON

ROUND BALERS

ROUND BALERS
PRODUCT INFORMATION

PREMIUM SERIES

	2956A/2956	2946A/2946	4160V/4180V	4160P
Bale Size Width	61.5" (1.6m)	46.5” (.4m)	48" (1.2m)	48" (1.2m)
Diameter - min.	30" (.8m)	30" (.8m)	35.5" (.9m)	35.5" (.9m)
Diameter - max.	72" (1.8m)	72" (1.8m)	63" (1.6m) / 71" (1.8m)	63" (1.6m)
Pick-up Width - Tine to Tine (in)	80.6" (2m)	65" (1.7m)	73" (1.9m)	73" (1.9m)
Mesh Wrap Option	YES	YES	STD	STD
Tires	21.5L x 16.1	21.5L x 16.1	500/55 x 20	620/55R26

TRACTOR REQUIREMENTS

Horsepower (minimum)	70	65	100/120	150
PTO (RPM)	540 or 1000	540 or 1000	540	540
Recommend PTO HP	90	80	120/140	180

ECONOMY SERIES

	1745D
Bale Size Width	46.5" (1.2m)
Diameter - min.	30" (.8m)
Diameter - max.	62" (1.6m)
Max. Weight (lbs.)	1250lbs
Pick-up Width - Tine to Tine	44
Mesh Option	YES
Tires	31 x 13.5 - 15
Optional	14L - 16.1

TRACTOR REQUIREMENTS

Horsepower (minimum)	40
PTO (RPM)	540

NOTE: This is a general sales guide; for further product details and official specifications refer to product information guides and product literature.

MASSEY FERGUSON®

RB4160V/RB4180V SILAGE CUTTER BALER

FOB Baltimore, MD

STANDARD EQUIPMENT

RB4160V - 48" (1.2m) Wide x 60" (1.6m) Diameter Bale
RB4180V - 48" (1.2m) Wide x 71" (1.8m) Diameter Bale
78" (2.01m) Wide Pickup Assembly - Camless Pickup
Wind Guard
Reset Clutch
Bale Counter
Bale Size Indicator
"Bale Full" Audio and Visual Alert
Two Bar Bale Shape Indicator
Direct Feed Rotor
Open Throat Chamber
540 RPM PTO Drive
Hydraulic Pickup Lift
(2) Rolls of Extra Mesh Storage
Over the Edge Mesh Wrap Capabilities
Endless Belts
Drive Chains Auto-Oiler System
Grease Banks for Easy Maintenance
500/55-20 Standard Tires
Hydroflex Drop Floor
XtraCut Feeding Rotor
17 Knives- Electronically Selectable
(17, 8, 9, 0 Blade Options)
Electrically Activated Mesh Wrap Systems
Power Split Driveline
Bale Ejection Ramp
Hydraulic Tailgate lock-out
Warning Light (Flashing)
E-Link Pro ISOBUS Color Monitor

Tractor Requirements
100 PTO HP (RB4160V) Min.
120 PTO HP (RB4180V) Min.
Two Double Acting Remote Valves

Order Code	Catalog Number	Description	Factory Code	Approx. Weight(lb)	List Price
		ONE ITEM FROM EACH GROUP MUST BE SPECIFIED			
BASE MACHINE					**GROUP 01**
MFRB4160V	700963758	4160V 4 x 5 Silage Cutter Baler	M4712169		61,197.00
MFRB4180V	700963760	4180V 4 x 6 Silage Cutter Baler	M5219137		67,781.00
E-LINK MONITOR					**GROUP 02**
3-MT0011	Base	E-Link ISOBUS Color Monitor			**In Base**
30-MT0101	700963726	ISOBUS Only (Less Monitor)	(M171710)		(2,230.00)

RB4160P PROTEC COMBINATION BALER WRAPPER

FOB Baltimore, MD

STANDARD EQUIPMENT

RB4160P – 48” (1.2m) Wide x 60” (1.6m) Diameter Bale Chamber
78" (2.01m) Wide Pickup Assembly - Camless Pickup
Wind Guard
Reset Clutch
Bale Counter
Bale Size Indicator
"Bale Full" Audio and Visual Alert
Two Bar Bale Shape Indicator
Direct Feed Rotor
Open Throat Chamber
540 RPM PTO Drive
Hydraulic Pickup Lift
Over the Edge Mesh Wrap Capabilities
Endless Belts
Drive Chains Auto-Oiler System
Grease Banks for Easy Maintenance
620/55R26 Standard Tires
Additional Net Wrap Storage
Storage for 12 Additional Rolls of Plastic Wrap
6" Video Screen to View the Wrapping Area
Hydroflex Drop Floor
XtraCut Feeding Rotor
17 Knives- Electronically Selectable
(17, 8, 9, 0 Blade Options)
Electrically Activated Mesh Wrap Systems
Power Split Driveline
Hydraulic Tailgate lock-out
Warning Light (Flashing)
E-Link Pro ISOBUS Color Monitor
Braking System (Choose Type in Options)
Wrapping Station Spotlight
Manual Wrapping Controls on the Rear of the Baler

Tractor Requirements
150 PTO HP Minimum
180 PTO HP Recommended
One Double Acting Remote Valve
One Single Acting Remote Valve

Order Code	Catalog Number	Description	Factory Code	Approx. Weight(lb)	List Price
		ONE ITEM FROM EACH GROUP MUST BE SPECIFIED			
BASE MACHINE					**GROUP 01**
MFRB4160P	700963759	4160P Protec Combination Baler Wrapper	M11758516		152,708.00
BRAKES- must select one option					**GROUP 02**
28-BK0021	700963737	Hydraulic Brakes	M125972		1,636.00
28-BK0031	700963736	Air Brakes	M172865		2,245.00
BALE EJECTION- must select one option					**GROUP 03**
29-BE0013	Base	Bale Tipper (Flips Bale on Side for use with a Squeeze)			**In Base**
29-BE0011	700963791	Bale Mat (Heavy Duty Rubber Mat)	(M122738)		(1,594.00)
E-LINK MONITOR					**GROUP 04**
3-MT0111	Base	E-Link Pro ISOBUS Color Monitor + Video Screen and Camera			**In Base**
30-MT0201	700965250	ISOBUS Only (Less Monitor)	(M171710)		(2,230.00)
ORDER FROM PARTS					
	72634470	Bale Mat (Heavy Duty Rubber Mat)			ORDER FROM PARTS

HESSTON by MASSEY FERGUSON

2956A ROUND BALER

FOB Hesston, KS

STANDARD EQUIPMENT

On-Board Hydraulic System
61.5" (1.6m) Wide x 72" (1.8m) Diameter Bale
80.6" (2m) Wide Pickup Assembly - Dual CamTrack Tine Control
Pickup Wind Guard
Slip Clutch with Hydraulic Declutcher
Bale Counter
Bale Size Indicator
"Bale Full" Audio and Visual Alert
3 Bar Color Coded Bale Shape Indicator
Direct Feed, Rotor, Open Throat Chamber
540/1000 RPM PTO Drive
Hydraulic Pickup Lift
Extra Mesh Roll Storage
Over the Edge Mesh Wrap Capabilities
Twine Tie and Mesh Wrap
QCS - Quad Cylinder Bale Density System
21.5L-16.1 Tires with Suspension Axle
Automatic Tying when Preset Bale Size is reached with Manual Override
Dual Tube Twine Arm
Staggered Belt Clean Out
Wedge Grip Belts with Alligator Lacings
Electrically Activated Twine and Mesh Wrap Systems
Safety Chain
Warning Light (Flashing)

Tractor Requirements
70 PTO HP (minimum)
One Double Acting Remote Valve
Bale Control Monitor required to Operate Baler
See Group 98

Order Code	Catalog Number	Description	Factory Code	Approx. Weight(lb)	List Price
		ONE ITEM FROM EACH GROUP MUST BE SPECIFIED			
BASE MACHINE					**GROUP 01**
MF2956A	ACX3479120	2956A Round Baler	M4786628		62,164.00
DRIVELINE					**GROUP 02**
LA47	700955626	540 RPM PTO			**In Base**
LA50	700955627	1000 RPM PTO			No Charge
BALE EJECTION					**GROUP 03**
B603	700956241	Hydraulic Kicker			No Charge
B602	700955603	Less Kicker (requires 700959586M -Bale Ramp Kit)	(M210133)		(2,729.00)
TWINE TIE / MESH WRAP					**GROUP 04**
B103	Standard*	Twine and Mesh Included **In Base**			**In Base**
B102	700955604*	Mesh Wrap (Less Twine Tie)	(M180257)		(2,341.00)
*Requires B603, 700956241 Kicker or 700959586M - Bale Ramp Kit					
WINDGUARD					**GROUP 05**
HR04	700963270	Standard Windguard			**In Base**
HR03	700963272	Solid Windguard with Roller Attachment	M56441		733.00
BALE CONTROL MONITOR - FIELD INSTALLED					**GROUP 98**
Includes Datatronic 5 monitor, harness, power adapter and hardware to mount Console inside the tractor cab. Required for tractors not equipped with ISO 11783 plug and Console.					
	ACX2886460M	Order for NA Built Tractor Plug (3 Blade AMP)	M139755		1,815.00
	ACX2886480M	Order for Direct Battery Connection	M139755		1,815.00

For Information on AGCO Hay Preservative and Applicators For Balers, See Pages 85 & 86.

2956A ROUND BALER

Order Code	Catalog Number	Description	Factory Code	Approx. Weight(lb)	List Price
FIELD INSTALLED KITS- (order as desired)					**GROUP 99**
	MK51249	Harness, Switched Power (To Hook Console Directly to Battery)	M15400		200.00
	MK50556	Fire Extinguisher Kit	M44891	17	583.00
	MK51018	Remote Start Switch	M08393		109.00
	700958057M	Silage Kit	M97482		1,266.00
	ACW3349840M	Bale Kicker Kit	M218603		2,839.00
	700958062M	Twine Tie Addition Kit	M182028		2,364.00
	700959492M	Mesh Wrap	M536074		6,962.00
	700958130M	Soft Core Bale Kit	M09625		125.00
	700958020M	Light Kit	M10010		130.00
	700959586M	Bale Ramp Kit	M78001		1,013.00
	700958018M	Short Crop Kit	M30184		392.00
	700961569M*	Solid Windguard Kit	M75845		985.00
	700961571M	Roller Windguard Kit (For use only with Solid Windguard)	M56518		734.00
	700963426M	Transit Coating (Factory Applied) (Recommended for shipments occurring in November through March 31ST)	M80619		1,047.00

*Note: Updated Solid Windguard Kit to Allow Roller Attachment

ORDER FROM PARTS

700741518	French Operators Manual and Decal Kit	2	No Charge
700741520	Spanish Operators Manual and Decal Kit	2	No Charge

Note: To Convert from 540 PTO to 1000 PTO order 1-3/8” 21 Spline Yoke (700 733 694) or 1-3/4” 20 Spline Yoke (700 733 702) from Parts.

HESSTON by MASSEY FERGUSON

2956 ROUND BALER

FOB Hesston, KS

STANDARD EQUIPMENT

61.5" (1.6m) Wide x 72" (1.8m) Diameter Bale
80.6" (2m) Wide Pickup Assembly - Dual CamTrack Tine Control
Pickup Wind Guard
Slip Clutch with Hydraulic Declutcher
Bale Counter
Bale Size Indicator
"Bale Full" Audio and Visual Alert
3 Bar Color Coded Bale Shape Indicator
Direct Feed, Rotor, Open Throat Chamber
540/1000 RPM PTO Drive
Hydraulic Pickup Lift
Extra Mesh Roll Storage
Over the Edge Mesh Wrap Capabilities
Twine Tie and Mesh Wrap
QCS - Quad Cylinder Bale Density System
21.5L-16.1 Tires with Suspension Axle
Automatic Tying when Preset Bale Size is reached with Manual Override
Dual Tube Twine Arm
Staggered Belt Clean Out
Wedge Grip Belts with Alligator Lacings
Electrically Activated Twine and Mesh Wrap Systems
Safety Chain
Warning Light (Flashing)

Tractor Requirements
70 PTO HP (minimum)
Two Double Acting Remote Valves
Bale Control Monitor required to Operate Baler
See Group 98

Order Code	Catalog Number	Description	Factory Code	Approx. Weight(lb)	List Price
		ONE ITEM FROM EACH GROUP MUST BE SPECIFIED			
BASE MACHINE					**GROUP 01**
MF2956	ACX3479110	2956 Round Baler	M4060133		52,729.00
DRIVELINE					**GROUP 02**
LA47	700955626	540 RPM PTO			**In Base**
LA50	700955627	1000 RPM PTO			No Charge
BALE EJECTION					**GROUP 03**
B602	700955603	Less Kicker			No Charge
B601	700955602	Kicker	M218603		2,839.00
TWINE TIE / MESH WRAP					**GROUP 04**
B103	Standard*	Twine and Mesh Included **In Base**			**In Base**
B102	700955604*	Mesh Wrap (Less Twine Tie)	(M180257)		(2,341.00)
*Requires B601, 700955602 Kicker or 700959586M - Bale Ramp Kit					
WINDGUARD					**GROUP 05**
HR04	700963270	Standard Windguard			**In Base**
HR03	700963272	Solid Windguard with Roller Attachment	M56441		733.00
BALE CONTROL MONITOR - FIELD INSTALLED					**GROUP 98**
Includes Datatronic 5 monitor, harness, power adapter and hardware to mount Console inside the tractor cab. Required for tractors not equipped with ISO 11783 plug and Console.					
	ACX2886460M	Order for NA Built Tractor Plug (3 Blade AMP)	M139755		1,815.00
	ACX2886480M	Order for Direct Battery Connection	M139755		1,815.00

For Information on AGCO Hay Preservative and Applicators For Balers, See Pages 85 & 86.

2956 ROUND BALER

Order Code	Catalog Number	Description	Factory Code	Approx. Weight(lb)	List Price
FIELD INSTALLED KITS- (order as desired)					**GROUP 99**
	MK51249	Harness, Switched Power (To Hook Console Directly to Battery)	M15400		200.00
	MK50556	Fire Extinguisher Kit	M44891	17	583.00
	MK51018	Remote Start Switch	M08393		109.00
	ACW3349840M	Bale Kicker Kit.	M218603		2,839.00
	700958057M	Silage Kit	M97482		1,266.00
	700958062M	Twine Tie Addition Kit	M182028		2,364.00
	700959492M	Mesh Wrap	M536074		6,962.00
	700958129M	Soft Core Bale Kit	M18326		238.00
	700958020M	Light Kit	M10010		130.00
	700959586M	Bale Ramp Kit	M78001		1,013.00
	700958018M	Short Crop Kit	M30184		392.00
	700961569M*	Solid Windguard Kit.	M75845		985.00
	700961571M	Roller Windguard Kit (For use only with Solid Windguard)	M56518		734.00
	700963426M	Transit Coating (Factory Applied) (Recommended for shipments occurring in November through March 31ST)	M80619		1,047.00

*Note: Updated Solid Windguard Kit to Allow Roller Attachment

ORDER FROM PARTS

700741518	French Operators Manual and Decal Kit.	2	No Charge
700741520	Spanish Operators Manual and Decal Kit.	2	No Charge

Note: To Convert from 540 PTO to 1000 PTO order 1-3/8” 21 Spline Yoke (700 733 694) or 1-3/4” 20 Spline Yoke (700 733 702) from Parts.

HESSTON by MASSEY FERGUSON

2946A ROUND BALER

FOB Hesston, KS

STANDARD EQUIPMENT

On-Board Hydraulic System
46.5" (1.2m) Wide x 72" (1.8m) Diameter Bale
65" (1.7m) Wide Pickup Assembly - Dual CamTrack Tine Control
Pickup Wind Guard
Slip Clutch with Hydraulic Declutcher
Bale Counter
Bale Size Indicator
"Bale Full" Audio and Visual Alert
3 Bar Color Coded Bale Shape Indicator
Direct Feed, Rotor, Open Throat Chamber
540/1000 RPM PTO Drive
Hydraulic Pickup Lift
Extra Mesh Roll Storage
Over the Edge Mesh Wrap Capabilities
Twine Tie and Mesh Wrap
QCS - Quad Cylinder Bale Density System
21.5L-16.1 Tires with Suspension Axle
Automatic Tying when Preset Bale Size is reached with Manual Override
Dual Tube Twine Arm
Staggered Belt Clean Out
Wedge Grip Belts with Alligator Lacings
Electrically Activated Twine and Mesh Wrap Systems
Safety Chain
Warning Light (Flashing)

Tractor Requirements
70 PTO HP (minimum)
One Double Acting Remote Valve
Bale Control Monitor required to Operate Baler
See Group 98

Order Code	Catalog Number	Description	Factory Code	Approx. Weight(lb)	List Price

ONE ITEM FROM EACH GROUP MUST BE SPECIFIED

BASE MACHINE — GROUP 01

MF2946A~M205	ACX3479090	2946A Round Baler	M4184873		54,349.00
MF2946A~M201	ACX3479100	2946A Round Baler with Silage	M4337025		56,325.00

DRIVELINE — GROUP 02

LA47	700955626	540 RPM PTO			**In Base**
LA50	700955627	1000 RPM PTO			No Charge

BALE EJECTION — GROUP 03

B603	700956240	Hydraulic Kicker			No Charge
B602	700955603	Less Kicker (requires 700959586M- Bale Ramp Kit)	(M210133)		(2,729.00)

TWINE / MESH WRAP — GROUP 04

B103	Standard*	Twine and Mesh Included **In Base**			**In Base**
B102	700956140*	Mesh Wrap (Less Twine Tie)	(M180257)		(2,341.00)

*Requires B603, 700956241 Kicker or 700959586M - Bale Ramp Kit

WINDGUARD — GROUP 05

HR04	700963271	Standard Windguard			**In Base**
HR03	700963273	Solid Windguard with Roller Attachment	M57981		753.00

BALE CONTROL MONITOR - FIELD INSTALLED — GROUP 98

Includes Datatronic 5 monitor, harness, power adapter and hardware to mount Console inside the tractor cab. Required for tractors not equipped with ISO 11783 plug and Console.

ACX2886460M	Order for NA Built Tractor Plug (3 Blade AMP)	M139755	1,815.00
ACX2886480M	Order for Direct Battery Connection	M139755	1,815.00

For Information on AGCO Hay Preservative and Applicators For Balers, See Pages 85 & 86.

2946A ROUND BALER

Order Code	Catalog Number	Description	Factory Code	Approx. Weight(lb)	List Price
FIELD INSTALLED KITS- (order as desired)					**GROUP 99**
	MK51249	Harness, Switched Power (To Hook Console Directly to Battery)	M15400		200.00
	MK50556	Fire Extinguisher Kit	M44891	17	583.00
	MK51018	Remote Start Switch	M08393		109.00
	ACW3349840M	Bale Kicker Kit.	M218603		2,839.00
	700958056M	Silage Kit	M89782		1,166.00
	700958062M	Twine Tie Addition Kit	M182028		2,364.00
	700959490M	Mesh Wrap	M484792		6,296.00
	700958130M	Soft Core Bale Kit	M09625		125.00
	700958016M	Short Crop Kit	M23408		304.00
	700958020M	Light Kit	M10010		130.00
	700959586M	Bale Ramp Kit	M78001		1,013.00
	700961568M*	Solid Windguard Kit.	M59983		779.00
	700961570M	Roller Windguard Kit (For use only with Solid Windguard)	M49126		638.00
	700963426M	Transit Coating (Factory Applied) (Recommended for shipments occurring in November through March 31ST)	M80619		1,047.00

*Note: Updated Solid Windguard Kit to Allow Roller Attachment

ORDER FROM PARTS

700741518	French Operators Manual and Decal Kit.	2	No Charge
700741520	Spanish Operators Manual and Decal Kit	2	No Charge

Note: To Convert from 540 PTO to 1000 PTO order 1-3/8” 21 Spline Yoke (700 733 694) or 1-3/4” 20 Spline Yoke (700 733 702) from Parts.

HESSTON by MASSEY FERGUSON

2946 ROUND BALER

FOB Hesston, KS

STANDARD EQUIPMENT

46.5" (1.2m) Wide x 72" (1.8m) Diameter Bale
65" (1.7m) Wide Pickup Assembly - Dual CamTrack Tine Control
Pickup Wind Guard
Slip Clutch with Hydraulic Declutcher
Bale Counter
Bale Size Indicator
"Bale Full" Audio and Visual Alert
3 Bar Color Coded Bale Shape Indicator
Direct Feed, Rotor, Open Throat Chamber
540/1000 RPM PTO Drive
Hydraulic Pickup Lift
Extra Mesh Roll Storage
Over the Edge Mesh Wrap Capabilities
Twine Tie and Mesh Wrap
QCS - Quad Cylinder Bale Density System
21.5L-16.1 Tires with Suspension Axle
Automatic Tying when Preset Bale Size is reached with Manual Override
Dual Tube Twine Arm
Staggered Belt Clean Out
Wedge Grip Belts with Alligator Lacings
Electrically Activated Twine and Mesh Wrap Systems
Safety Chain
Warning Light (Flashing)

Tractor Requirements
70 PTO HP (minimum)
Two Double Acting Remote Valves
Bale Control Monitor required to Operate Baler
See Group 98

Order Code	Catalog Number	Description	Factory Code	Approx. Weight(lb)	List Price
		ONE ITEM FROM EACH GROUP MUST BE SPECIFIED			
BASE MACHINE					**GROUP 01**
MF2946~M205	ACX3479070	2946 Round Baler	M3418954		44,402.00
MF2946~M201	ACX3479080	2946 Round Baler with Silage	M3559633		46,229.00
DRIVELINE					**GROUP 02**
LA47	700955626	540 RPM PTO			**In Base**
LA50	700955627	1000 RPM PTO			No Charge
BALE EJECTION					**GROUP 03**
B602	700955603	Less Kicker			No Charge
B601	700956153	Kicker	M220682		2,866.00
TWINE / MESH WRAP					**GROUP 04**
B103	Standard*	Twine and Mesh Included **In Base**			**In Base**
B102	700956140*	Mesh Wrap (Less Twine Tie)	(M180257)		(2,341.00)
*Requires B601, 700956153 Kicker or 700959586M - Bale Ramp Kit					
WINDGUARD					**GROUP 05**
HR04	700963271	Standard Windguard			**In Base**
HR03	700963273	Solid Windguard with Roller Attachment	M57981		753.00
BALE CONTROL MONITOR - FIELD INSTALLED					**GROUP 98**
Includes Datatronic 5 monitor, harness, power adapter and hardware to mount Console inside the tractor cab. Required for tractors not equipped with ISO 11783 plug and Console.					
	ACX2886460M	Order for NA Built Tractor Plug (3 Blade AMP)	M139755		1,815.00
	ACX2886480M	Order for Direct Battery Connection	M139755		1,815.00

For Information on AGCO Hay Preservative and Applicators For Balers, See Pages 85 & 86.

2946 ROUND BALER

Order Code	Catalog Number	Description	Factory Code	Approx. Weight(lb)	List Price
FIELD INSTALLED KITS- (order as desired)					**GROUP 99**
	MK51249	Harness, Switched Power (To Hook Console Directly to Battery)	M15400		200.00
	MK50556	Fire Extinguisher Kit	M44891	17	583.00
	MK51018	Remote Start Switch	M08393		109.00
	ACW3349840M	Bale Kicker Kit.	M218603		2,839.00
	700958056M	Silage Kit	M89782		1,166.00
	700958062M	Twine Tie Addition Kit	M182028		2,364.00
	700959490M	Mesh Wrap	M484792		6,296.00
	700958129M	Soft Core Bale Kit	M18326		238.00
	700958020M	Light Kit	M10010		130.00
	700958016M	Short Crop Kit	M23408		304.00
	700959586M	Bale Ramp Kit	M78001		1,013.00
	700961568M*	Solid Windguard Kit.	M59983		779.00
	700961570M	Roller Windguard Kit (For use only with Solid Windguard)	M49126		638.00
	700963426M	Transit Coating (Factory Applied) (Recommended for shipments occurring in November through March 31ST)	M80619		1,047.00

*Note: Updated Solid Windguard Kit to Allow Roller Attachment

ORDER FROM PARTS

700741518	French Operators Manual and Decal Kit.	2	No Charge
700741520	Spanish Operators Manual and Decal Kit	2	No Charge

Note: To Convert from 540 PTO to 1000 PTO order 1-3/8” 21 Spline Yoke (700 733 694) or 1-3/4” 20 Spline Yoke (700 733 702) from Parts.

HESSTON by MASSEY FERGUSON

1745D ROUND BALER

FOB Hesston, KS

STANDARD EQUIPMENT

Direct Feed, Open Throat Chamber
46.5" (1.2m) Wide Bale
62" (1.6m) Diameter Bale
44.17" (1.1m) Wide Pickup
2.6" (.1m) Spacing between Tines
Six Wedge Grip Belts, 6.9" Wide
Manual Lift on Pickup
Electric Twine Threader
Dual Tube Twine Arm
Automatic Twine Cutoff
Twine Capacity - 4 Balls of Twine
Pickup Windguard
Drop & Go
Deluxe AutoTie
Adjustable Density Valve

540 RPM PTO Drive
"Sure-Trac" Crowned Drive Roll
31-13.5 x 15 Standard or
14L x 16.1 Optional Tires
Bale Size Indicator
Transport Light (Flashing)
Safety Chain
Bale Full Alert and Tailgate Latch Indicator

Tractor Requirements
40 PTO HP (minimum)
One Double Acting Remote Vale

Order Code	Catalog Number	Description	Factory Code	Approx. Weight(lb)	List Price
ONE ITEM FROM EACH GROUP MUST BE SPECIFIED UNLESS NOTED OTHERWISE					
BASE MACHINE					**GROUP 01**
MF1745D	ACX3479060	1745D Round Baler	M2111109		27,417.00
TIRES					**GROUP 02**
B106	700956009	31 x 13.5-15			**In Base**
B105	700956010	14L x 16.1	M38115		495.00
CONTROLLER					**GROUP 03**
B304	700957443	Deluxe Auto Tie Controller			**In Base**
MESH WRAP					**GROUP 04**
B101	700957444	Less Mesh Wrap (Twine Only)			**In Base**
B102	ACX2931870	Mesh Wrap (Twine and Mesh)	M400015		5,195.00
BALE EJECTION					**GROUP 05**
		Less Kicker			**In Base**
B601	ACX2931880	Kicker	M222915		2,895.00
FIELD INSTALLED KITS - (order as desired)					**GROUP 99**
	MKD50556	Fire Extinguisher Kit	M44891	17	583.00
	MK51266	Gathering Wheels Kit	M111573	217	1,449.00
	MK51270	Bale Ramp Kit (2008 and Newer)	M51513	66	669.00
	MKD51092	Bale Counter Kit	M06468	5	84.00
	MKD51159	Starting Roll Scraper	M12705		165.00
	ACX2931890M	Hydraulic Kicker Kit	M189266		2,458.00
	ACX2947250M	Mesh Wrap	M471317		6,121.00
	700957455M	Bale Shape Kit	M41811		543.00
	ACW3888600M	Drop & Go for MY2020 and Older	M86009		1,117.00
	700963427M	Transit Coating (Factory Applied) (Recommended for shipments occurring in November through March 31ST)	M70532		916.00
ORDER FROM PARTS					
	700724299	Optional Adjustable Density Valve			Order from Parts
	TBA	Drop & Go for MY2020 and Older			Order from Parts
	700735402	French Operators Manual and Decal Kit		2	No Charge
	700735405	Spanish Operators Manual and Decal Kit		2	No Charge

For Information on AGCO Hay Preservative and Applicators For Balers, See Pages 85 & 86.

Reserved

HESSTON
by MASSEY FERGUSON

BALE WRAPPERS

PULL-TYPE BALE WRAPPERS

FOB Port of Entry

PRODUCT INFORMATION

	TW130	TW160
Bale Diameters	4' x 4' 3" (1.25m x 1.3m)	4' x 5' 3" (1.25m x 1.6m)
Transport Width	8' 4" (2.55m)	7' 6" (2.30m)
Transport Length	15' 4" (4.7m)	19' (5.8m)
Transpower Height	7' 5" (2.3m)	8' 9" (2.7m)
Weight	2,381 lbs. (1,080 kg)	4,652 lbs. (2,110 kg)
Horsepower Requirement	41 HP (31 kW)	55 HP (40 kW)

STANDARD EQUIPMENT
540 RPM PTO
Parking Jack
Safety Chain
SMV Sign
Film Storage 3+1
Bale Counter
500 or 750 Film Compatibility

ADDITIONAL REQUIREMENTS
1 Single Acting Remote with Return
5-8 GPH (18-30 Lph) Hydraulic Flow
12V Power Supply

Order Code	Catalog Number	Description	Factory Code	Approx. Weight(lb)	List Price
ONE ITEM FROM EACH GROUP MUST BE SPECIFIED UNLESS NOTED OTHERWISE					
BASE MACHINE					**GROUP 01**
MFTW130	700965248	Semi-Automatic 4 x 4 Bale Wrapper with E-Link Basic Monitor	M1799182		23,366.00
MFTW160	700965249	Automatic 4 x 5 Bale Wrapper with E-Link Plus Monitor	M2555938		33,194.00
FIELD INSTALLED KITS - (order as desired)					**GROUP 99**
	TBA	Optional Bale Tipper for use with TW130	M112112		1,456.00

HESSTON
by MASSEY FERGUSON

SMALL / MEDIUM SQUARE BALERS

SMALL / MEDIUM RECTANGULAR BALERS

FOB Hesston, KS

PRODUCT INFORMATION

	1844S	1842	1840	1838
CLASS	3	2	1	1
BALE SIZE				
Height	15" (.4m)	16" (.4m)	14" (.4m)	14" (.4m)
Width	22" (.6m)	18" (.5m)	18" (.5m)	18" (.5m)
Length	12"-52" (.3m to 1.3m)	12"-52" (.3m to 1.3m)	12"-52" (.3m to 1.3m)	12"-52" (.3m to 1.3m)
PICK-UP				
Width - Tine to Tine	70" (1.8m)	70" (1.8m)	70" (1.8m)	70" (1.8m)
No. of Tine Bars	4	4	4	3
No. of Double Tines	56	56	56	42
TIRES	14Lx16.1	31x13.5-15	31x13.5-15	11Lx14
TRACTOR REQUIREMENTS				
Horsepower	75	50	50	45
PTO	1000	540	540	540

NOTE: This is a general sales guide; for further product details and official specifications refer to product information guides and product literature.

HESSTON by MASSEY FERGUSON

1844S MEDIUM RECTANGULAR BALER

FOB Hesston, KS
CLASS 3 BALER

STANDARD EQUIPMENT

Three Twine Baler - PTO Powered
Hydraulic Density Control Top, Bottom and Side Rails
Bale Weight up to 180 lbs.
91.2" (2.3m) Pickup (Outside Panel to Panel)
  with 4 Bars and 56 Double Tines
Twine Boxes - 12 Ball Capacity
Twine Requirements - Heavy Duty Plastic or Sisal
1000 RPM Double Reduction Hypoid Gearbox
Two Gauge Wheels
6 Stuffer Tines
Plunger Speed 90 Strokes per Minute
Plunger Stroke 21.9" Long
14L x 16.1, 12 ply Flotation Tires
Bale Formation Kit
Bale Size:
  Height - 15" (.4m)
  Width - 22" (.6m)
  Length - Adjustable 12" to 52" (.3m to 1.3m)
Lights for Night Operation
2-5/16" Ball Hitch
Knottter Lube System
13" Diameter Pickup Augers
1/4 Turn Chute

Tractor Requirements: 80 PTO HP

Order Code	Catalog Number	Description	Factory Code	Approx. Weight(lb)	List Price
ONE ITEM FROM EACH BOX MUST BE SPECIFIED UNLESS NOTED OTHERWISE					
BASE MACHINE					**GROUP 01**
MF1844S	ACX3479010	1844S Three-Twine Medium Rectangular PTO Baler	M6949789		90,257.00
FIELD INSTALLED KITS - (order as desired)					**GROUP 99**
	MK41222	Tandem Wheel Kit, 12.5L - 15	M204127	500	2,651.00
	ACX2474910M	Clevis Hitch Kit.	M45969		597.00
	700963427M	Transit Coating (Factory Applied) . . . . . (Recommended for shipments occurring in November through March 31ST)	M70532		916.00
ORDER FROM PARTS					
	700736613	French Operators Manual		2	No Charge
	700736614	Spanish Operators Manual		2	No Charge

For Information on AGCO Hay Preservative and Applicators For Balers, See Pages 85 & 86.

1842 MEDIUM RECTANGULAR BALER

FOB Hesston, KS
CLASS 2 BALER

STANDARD EQUIPMENT

16" x 18" (.4m x .5m) Bale Chamber
Equal Angle Hitch with 4-Joint Driveline
and Overrunning Clutch
Heavy Duty Hypoid Gearbox
91.2" (2.3m) Pickup (outside Panel to Panel)
with 4 Bars and 56 Double Tines
Two Pickup Gauge Wheels
Brackets to accommodate ASAE Standard Bale Counter
Safety Chain
Parking Jack
31 x 13.5-15, 8 Ply Flotation Tires
Knotter Blower
Hydraulic Pick-up Lift
Replaceable Bolt on Axles
Tool Less Bale Length Adjustment
13" Diameter Pickup Auger

Adjustable Bale Length 12" to 52" (.3m to 1.3m)
100 Strokes per minute Plunger Mounted
on 8 Ball Bearing Rollers
Twine Knotters
Center-Line Feed System
Hydraulic Bale Density Control
Twine Storage Box - 10 Ball Capacity

Tractor Requirements
50 PTO HP (minimum)
540 RPM PTO
Double Acting Remote Valve

Order Code	Catalog Number	Description	Factory Code	Approx. Weight(lb)	List Price
ONE ITEM FROM EACH GROUP MUST BE SPECIFIED UNLESS NOTED OTHERWISE					
BASE MACHINE					**GROUP 01**
MF1842	ACX3479000	1842 Twine Tie Baler	M3273347	4375	42,511.00
FIELD INSTALLED KITS - (order as desired)					**GROUP 99**
	MKD40416	Bale Chute Kit	M13937	28	181.00
	MKD40417	Bale Chute Extension Kit (For use with MKD40416, Bale Chute)	M15785	47	205.00
	MKD50391	Bale Chute Quarter Turn Kit	M42273	78	549.00
	ACX2457180M	Field Light Kit (Requires Harness Kit # 700963604M if Installed on 2016 or Prior Model Year)	M23331	10	303.00
	MKD40582	Knotter Lubrication System Kit	M128898	9	1,674.00
	ACX2466310M	Tool Less Bale Length Adjustment Kit (Can be Retrofit onto all MY2019 and Older Balers. Standard on MY20 and Newer)	M11473		149.00
	700963427M	Transit Coating (Factory Applied) (Recommended for shipments occurring in November through March 31)	M70532		916.00

For Information on AGCO Hay Preservative and Applicators For Balers, See Pages 85 & 86.

HESSTON by MASSEY FERGUSON

1840 SMALL RECTANGULAR BALER

FOB Hesston, KS
CLASS 1 BALER

STANDARD EQUIPMENT

14" x 18" (.4m x .5m) Bale Chamber
U-Joint - Constant Velocity 3-Joint Driveline and Overrunning Clutch
Hypoid Gearbox with Tapered Roller Bearings
89.13" (2.3) Pickup (outside Panel to Panel) with 4 Bars and 56 Double Tines
Two Pickup Gauge Wheels
Equal Weight Distribution on both Wheels
Manual Pickup Lift
31 x 13.5 - 15, 8P Tires
Replaceable Bolt on Axles
Tool Less Bale Length Adjustment
13" Diameter Pickup Auger
Adjustable Bale Length 12" to 52" (.3m to 1.3m)
100 Strokes per minute Plunger mounted on 8 Sealed Ball Bearing Rollers
Center Line Feed System
Dual Spring Bale Tensioning
Twine Storage Box - 10 Ball Capacity
Bale Counter
Adjustable Drawbar
Safety Chain
Parking Jack

Tractor Requirements:
50 PTO HP (minimum)
540 RPM PTO

Order Code	Catalog Number	Description	Factory Code	Approx. Weight(lb)	List Price
ONE ITEM FROM EACH GROUP MUST BE SPECIFIED UNLESS NOTED OTHERWISE					
BASE MACHINE					**GROUP 01**
MF1840	ACX3478970	1840 Small Rectangular Baler- Twine	M2591589		33,657.00
UPGRADE PACKAGE					**GROUP 02**
	MKT0334	Standard Mechanical Package Includes: Mechanical Tensioner Less Knotter Blower			**In Base**
	MKT0335	High Performance Package Includes: Hydraulic Tensioner Knotter Blower Hydraulic Pick-up Lift	M188958		2,454.00
PICK-UP LIFT - Optional					**GROUP 03**
PU01	ACX2457170	Hydraulic Pick-up Lift Requires One Double Acting Remote Valve	M36267		471.00
FIELD INSTALLED KITS - (order as desired)					**GROUP 99**
	MKD40416	Bale Chute Kit	M13937	28	181.00
	MKD40417	Bale Chute Extension Kit (For use w/ MKD40416)	M15785	47	205.00
	MKD50391	Bale Chute Quarter Turn Kit	M42273	78	549.00
	700961868M	Knotter Blower Kit (Requires Knotter/ Blower Field Light Harness Catalog# 700963604M. This Harness will already be Present on MY2017 Balers & Newer Balers Equipped with the Factory Knotter Blower.)	M37037		481.00
	700963604M	Knotter / Blower Field Light Harness (Required to install 700961868M or 700963603M on MY2017 or Newer Balers not Equipped with Knotter Blower from the Factory or MY2016 & Prior Balers)	M21714		282.00
	ACX2931930M	Hydraulic Bale Tension Kit	M135058	66	1,754.00
	ACX2457140M	Hydraulic Pick-up Lift Kit (Requires one Double Acting Remote Valve)	M37037	10	481.00
	700961890M	Wagon Hitch Kit	M78848		1,024.00
	ACX2457180M	Field Light Kit (Requires Knotter/ Blower Field Light Harness Catalog# 700963604M. This Harness will already be Present on MY2017 & Newer Balers Equipped with the Factory Knotter Blower.)	M23331	10	303.00
	700963614M	Bale Thrower Kit with Electronic Speed Control (Order Separately)	M765380	510	9,940.00
	ACW7600100M	Knotter Lube Kit	M45738		594.00
	ACX2464620M	Easy Bale Length Adjustment Kit (Can be Retrofit onto all MY2019 and Older Balers. Standard on MY20 and Newer)	M10395		135.00
	700963427M	Transit Coating (Factory Applied) (Recommended for shipments occurring in November through March 31)	M70532		916.00
ORDER FROM PARTS					
	700741546	French Operators Manual and Decal Kit		2	No Charge
	700741548	Spanish Operators Manual and Decal Kit		2	No Charge

For Information on AGCO Hay Preservative and Applicators For Balers, See Pages 85 & 86.

1838 SMALL RECTANGULAR BALER

FOB Hesston, KS
CLASS 1 BALER

STANDARD EQUIPMENT

14" x 18" (.4m x .5m) Bale Chamber
U-Joint - Constant Velocity 3-Joint Driveline and Overrunning Clutch
Hypoid Gearbox with Tapered Roller Bearings
89.13" (2.3) Pickup (outside Panel to Panel) with 3 Bars and 42 Double Tines
Two Pickup Gauge Wheels
Equal Weight Distribution on both Wheels
Manual Pickup Lift
Safety Chain
11L x 14 Tires
13" Diameter Pickup Augers
Tool Less Bale Length Adjustment
Adjustable Bale Length 12" to 52" (.3m to 1.3m)
100 Strokes per minute Plunger mounted on 7 Sealed Ball Bearing Rollers
Twine Knotters
Center Line Feed System
Dual Spring Bale Tensioning
Twine Storage Box - 6 Ball Capacity
Bale Counter
Parking Jack

Tractor Requirements
45 PTO HP (minimum)
540 RPM PTO

Order Code	Catalog Number	Description	Factory Code	Approx. Weight(lb)	List Price
ONE ITEM FROM EACH GROUP MUST BE SPECIFIED UNLESS NOTED OTHERWISE					
BASE MACHINE					**GROUP 01**
MF1838	ACX3478390	1838 Small Rectangular Baler	M2222528		28,864.00
UPGRADE PACKAGE					**GROUP 02**
	Base	Standard Mechanical Package Includes: Mechanical Tensioner Less Knotter Blower			**In Base**
	MKT0400	High Performance Package Includes: Hydraulic Tensioner Knotter Blower	M152691		1,983.00
FIELD INSTALLED KITS - (order as desired)					**GROUP 99**
	MKD40416	Bale Chute Kit	M13937	28	181.00
	MKD40417	Bale Chute Extension Kit (For use w/ MKD40416)	M15785	47	205.00
	MKD50391	Bale Chute Quarter Turn Kit	M42273	78	549.00
	700961890M	Wagon Hitch Kit	M78848	95	1,024.00
	ACX2931930M	Hydraulic Bale Tension Kit	M135058	66	1,754.00
	ACX2457140M	Hydraulic Pickup Lift Kit (Requires one Double Acting Remote Valve)	M37037	10	481.00
	ACX2457180M	Field Light Kit (Requires Knotter/ Blower Field Light Harness Catalog# 700963604M. This Harness will already be Present on MY2017 & Newer Balers Equipped with the Factory Knotter Blower)	M23331	10	303.00
	700963615M	Bale Thrower Kit with Electronic Speed Control (Order Separately)	M765380	510	9,940.00
	700961868M	Knotter Blower Kit. (Requires Knotter/ Blower Field Light Harness Catalog# 700963604M. This Harness will already be Present on MY2017 & Newer Balers Equipped with the Factory Knotter Blower)	M37031		481.00
	700963604M	Knotter / Blower Field Light Harness (Required to install 700961868M or 700963603M on MY2017 or Newer Balers not Equipped with Knotter Blower from the Factory or MY2016 and Prior Balers)	M21714		282.00
	ACW7600100M	Knotter Lube Kit	M45738		594.00
	ACX2464620M	Tool Less Bale Length Adjustment (Can be Retrofit onto all MY2019 and Older Balers. Standard on MY20 and Newer)	M10395		135.00
	700963427M	Transit Coating (Factory Applied) (Recommended for shipments occurring in November through March 31)	M70532		916.00
ORDER FROM PARTS					
	700726939	French Operators Manual and Decal Kit		2	No Charge
	700726940	Spanish Operators Manual and Decal Kit.		2	No Charge

For Information on AGCO Hay Preservative and Applicators For Balers, See Pages 85 & 86.

HESSTON by MASSEY FERGUSON

LARGE SQUARE BALERS

LARGE RECTANGULAR BALERS

FOB Hesston, KS

PRODUCT INFORMATION

	2290	2270XD	2270	2250
CLASS	5	6	5	4
BALE SIZE				
Width:	47.2" (1.2m)	47.2" (1.2m)	47.2" (1.2m)	31.5" (.8m)
Height:	50" (1.3m)	34.4" (.9m)	34.4" (.9m)	34.4" (.9m)
Length:	Up to 108" (2.7m)	Up to 108" (2.7m)	Up to 108" (2.7m)	Up to 108" (2.7m)
*Weight:	Up to 2,000 lbs. (907kg)	Up to 1,700 lbs. (771kg)	Up to 1,500lbs. (680kg)	Up to 1,000 lbs (454kg)
PICK-UP				
Width-Tine to Tine:	80.6" (2m)	80.6" (2m)	80.6" (2m)	80.6" (2m)
Tine Spacing:	2.6" (.1m)	2.6" (.1m)	2.6" (.1m)	2.6" (.1m)
No. of Tine Bars	4	4	4	4
No. of Tines	128	128	128	128
TIRES				
Single Axle	28Lx26	700/50-22.5	700/50-22.5	600/50x22.5
Tandem Axle	500/45x22.5	500/45x22.5	500/45x22.5	550/50x17
TRACTOR REQUIREMENTS				
Horsepower				
Minimum (Non cutter)	150 HP (101 kw)	150 HP (101 kw)	130 HP (97 kw)	120 HP (90 kw)
Recommended	180 HP (112 kw)	180 HP (112 kw)	170 HP (112 kw)	150 HP (112 kw)
Minimum (With cutter)	N/A	210 HP (157 kw)	200 HP (149 kw)	180 HP (134 kw)
PTO	1000 RPM	1000 RPM	1000 RPM	1000 RPM
Minimum Hydraulic Valves	One Single Acting Remote Valve	One Single Acting Remote Valve	One Single Acting Remote Valve	One Single Acting Remote Valve

*** Weight determined in Alfalfa crop at ideal moisture level.**

NOTE: This is a general sales guide; for further product details and official specifications refer to product information guides and product literature.

HESSTON by MASSEY FERGUSON

2290 LARGE RECTANGULAR BALER

FOB Hesston, KS
CLASS 5 Baler

STANDARD EQUIPMENT

47.2" x 50" (1.2m x 1.3m) Bale Chamber
102.2" (2.6m) Wide Pickup with Gathering Augers, Gauge Wheels and Hydraulic Lift
Knotter Fan
Bale Counter (in Monitor)
Bale Length Adjustable Up to 108" (2.7m)
Automatic Knotter Lube
Plunger Speed 33 Strokes per minute
Plunger Stroke 32.8" (.8m) Long
Tying Mechanism - 6 Heavy Duty Double Knotters
Lights for Night Operation
Warning Lights
Parking Jack
Safety Chain
E-Coat Primer with Powder Paint
Removable Gauge Wheels
Roller Windguard
Diamond Drive Chains
OptiForm Bale Chamber
Bale Ejector
Twine Requirements - Heavy Duty Plastic
Fork Type Feed System Packing into Separate Charge Chamber
Bale Case Compression - 2 Hydraulic Cylinders Provide Compression to Top and Side Members
Automatic Density Control Monitors Plunger and Automatically Controls Hydraulic Cylinders on Bale Case
Twine Boxes - 30 Ball Capacity
On-Board Hydraulic System
Silage Ready (Roller Chute Recommended)
Folding Safety Rails

Tractor Requirements
150 PTO HP (minimum), 180 HP Recommended
1000 RPM
One Double Acting Remote Valve (Pick-up)
One Single Acting Remote Valve (Tandem Option)
Bale Control Monitor required to Operate Baler (See Group 98)

Order Code	Catalog Number	Description	Factory Code	Approx. Weight(lb)	List Price
ONE ITEM FROM EACH GROUP MUST BE SPECIFIED UNLESS NOTED OTHERWISE					
BASE MACHINE					**GROUP 01**
MF2290	ACX3486810	2290 Large Rectangular Baler	M15225056	11360	197,728.00
AXLE					**GROUP 02**
50-Q501	700964103	Single Axle with 28Lx26, 16 Ply Tires, Less Brakes			**In Base**
50-Q503	700964104*	Single Axle with 28Lx26, 16 Ply Tires with Hydraulic Brakes	M280665		3,645.00
50-Q508	700964105*	Single Axle with 28Lx26, 16 Ply Tires with Air Brakes	M318087		4,131.00
50-Q502	700960751	Tandem Axle w/ 500/45x22.5, 16 Ply Tires, Less Brakes	M879725	1780	11,425.00
50-Q504	700964107*	Tandem Axle w/ 500/45x22.5, 16 Ply Tires with Hydraulic Brakes	M1398551	1780	18,163.00
50-Q505	700964108*	Tandem Axle w/ 500/45x22.5, 16 Ply Tires w/ Air Brakes	M1582427		20,551.00
***5 MONTH LEAD TIME REQUIRED**					
TIRE UPGRADE - OPTIONAL					**GROUP 03**
75-B114	ACX3306660	Upgrade to 620/40R X 22.5 Radial Tires (Tandem Axle only)	M383152		4,976.00
75-B120	ACX3492100	Upgrade to 390/28R26 Radial Tires (Single Axle only)	M656964		8,532.00
LUBRICATION- OPTIONAL					**GROUP 04**
30-B901	700963605	Automatic Chain Lubrication System - Packer Baler	M113190		1,470.00
EJECTOR					**GROUP 05**
25-Q902	700960986	Ejector			**In Base**

2290 LARGE RECTANGULAR BALER

Order Code	Catalog Number	Description	Factory Code	Approx. Weight(lb)	List Price
DRIVELINE- FIELD INSTALLED - Required					**GROUP 06**
	MK41290	Type 2, 1-3/8” 21-Tooth PTO	M65142	50	846.00
	MK41213	Type 3, 1-3/4” 20-Tooth PTO	M104104	50	1,352.00
BALE CONTROL MONITOR - FIELD INSTALLED					**GROUP 98**
Includes Datatronic 5 monitor, harness, power adapter and hardware to mount Console inside the tractor cab. Required for tractors not equipped with ISO 11783 plug and Console.					
	ACX2886460M	Order for NA Built Tractor Plug (3 Blade AMP)	M139755		1,815.00
	ACX2886470M	Order for EU Built Tractor Plug (3 Round Pin)	M139755		1,815.00
	ACX2886480M	Order for Direct Battery Connection	M139755		1,815.00
FIELD INSTALLED KITS - (order as desired)					**GROUP 99**
	700964017M	Knotter Trip Kit (Requires Module Kit - 700960668M)	M84161		1,093.00
	MK41208	Flat Bale Chute (Required if AC25 Bale Accumulator is not used)	M126973		1,649.00
	700960976M	Roller Bale Chute (2200 series only)	M262108		3,404.00
	700961822M	Kit - Hydraulics, Roller Bale Chute without Ejector	M53669		697.00
	700960798M	Bale Weight Kit (Requires Module Kit - 700960668M)	M149226		1,938.00
	700960668M	Module Kit.	M79079		1,027.00
	700960673M	Hydraulic Jack Kit	M88319		1,147.00
	700960974M	Bale Ejector Kit (For MY19 and older)	M285285		3,705.00
	700963607M	Chain Lube Kit for Packer Baler	M124201		1,613.00
	700963426M	Transit Coating (Factory Applied) (Recommended for shipments occurring in November through March 31ST)	M80619		1,047.00
ORDER FROM PARTS					
	ACZ000181A	Telemetry-STD Plus MUST BE ORDERED WITH 700179375			ORDER FROM PARTS
	700179375	Telemetry-Installation Kit MUST BE ORDERED WITH ACZ000181A			ORDER FROM PARTS
	700741496	French Operators Manual and Decal Kit.		2	No Charge
	700741498	Spanish Operators Manual and Decal Kit		2	No Charge

For Information on AGCO Hay Preservative and Applicators For Balers, See Pages 85 & 86.

HESSTON by MASSEY FERGUSON

2270XD LARGE RECTANGULAR BALER

FOB Hesston, KS
CLASS 6 BALER

STANDARD EQUIPMENT

47.2" x 34.4" (1.2m x .9m) Bale Chamber
102.2" (2.6m) Wide Pickup with Gathering Augers, Gauge Wheels and Hydraulic Lift
Knotter Fan
Bale Counter (in Monitor)
Bale Length Adjustable Up to 108" (2.7m)
Automatic Knotter Lube
Plunger Speed: 47 Strokes per minute
Plunger Stroke: 29.1" (.7m) Long
Tying Mechanism - 6 Heavy Duty Double Knotters
Lights for Night Operation
Warning Lights
Parking Jack
Safety Chain
Selectable Bale Ejection- Partial or Full
E-Coat Primer with Powder Paint
Removable Gauge Wheels
Roller Windguard
Diamond Drive Chains
Twine Requirements - Heavy Duty Plastic
Fork Type Feed System Packing into Separate Charge Chamber
Bale Case Compression - 2 Hydraulic Cylinders Provide Compression to Top and Side Members
OptiForm Bale Chamber
Automatic Density Control Monitors Plunger and Automatically Controls Hydraulic Cylinders on Bale Case
Twine Boxes - 30 Ball Capacity
On-Board Hydraulic System
Silage Ready (Roller Chute Recommended)
Folding Top Rails

ProCut™ Rotor Cutter
'V' Shaped Rotor Pattern Design - 25.5" (650mm) Diameter
Bolt on Finger Sections
Hydraulic Drop Down & Slide-out Knife Bed Drawer
• 26 knives at 1.5" cut lengths
Easily Removable Knives with No Tools Required

Tractor Requirements
150 PTO HP (minimum), 1000 RPM
180 PTO HP (recommended)
210 PTO HP (minimum), 1000 RPM with Cutter Units
One Double Acting Remote Valve - Cutter (if equipped)
One Double Acting Remote Valve - Pick-up
One Single Acting Remote Valve - Tandem Option
Bale Control Monitor required to Operate Baler See Group 98

Order Code	Catalog Number	Description	Factory Code	Approx. Weight(lb)	List Price
ONE ITEM FROM EACH GROUP MUST BE SPECIFIED UNLESS NOTED OTHERWISE					
BASE MACHINE					**GROUP 01**
MF2270XD~Q706	ACX3486730	2270XD Large Rectangular Baler	M15218896	17000	197,648.00
MF2270XD~Q710	ACX3486740	2270XD Large Rectangular Baler w/ ProCut™Rotor Cutter	M16758126		217,638.00
AXLE					**GROUP 02**
50-Q501	ACX2574140	Single Axle with 700/50-22.5, 16 Ply Tires, Less Brakes			**In Base**
50-Q503	ACX2574130*	Single Axle with 700/50-22.5, 16 Ply Tires with Hydraulic Brakes	M288288		3,744.00
50-Q508	ACX2757470*	Single Axle w/ 700/50-22.5, 16 Ply Tires with Air Brakes	M326172		4,236.00
50-Q502	ACX2539670	Tandem Axle w/ 500/45x22.5, 12 Ply Tires, Less Brakes	M880726	1780	11,438.00
50-Q504	ACX2539660*	Tandem Axle w/ 500/45x22.5, 12 Ply Tires with Hydraulic Brakes	M1365826	1780	17,738.00
50-Q505	ACX2539650*	Tandem Axle w/ 500/45x22.5, 12 Ply Tires w/ Air Brakes	M1406790		18,270.00
***5 MONTH LEAD TIME REQUIRED**					
TIRE UPGRADE - OPTIONAL					**GROUP 03**
75-B114	ACX3306660	Upgrade to 620/40R X 22.5 tires (Tandem Axle only)	M383152		4,976.00
LUBRICATION- OPTIONAL					**GROUP 04**
30-B901	ACX2449780	Automatic Chain Lubrication System - Packer Baler	M113190		1,470.00
30-B902	ACX2449790	Automatic Chain Lubrication System - Cutter Baler	M143990		1,870.00

2270XD LARGE RECTANGULAR BALER

Order Code	Catalog Number	Description	Factory Code	Approx. Weight(lb)	List Price
DRIVELINE- FIELD INSTALLED - Required					**GROUP 05**
	700958792M	Type 3, 1-3/4” 20-Tooth PTO	M104104	50	1,352.00
BALE CONTROL MONITOR - FIELD INSTALLED					**GROUP 98**
Includes Datatronic 5 monitor, harness and hardware to mount C1000 Monitor inside the tractor cab. Required for tractors not equipped with ISO 11783 plug and C1000 Monitor.					
	ACX2886460M	Order for NA Built Tractor Plug (3 Blade AMP)	M139755		1,815.00
	ACX2886470M	Order for EU Built Tractor Plug (3 Round Pin)	M139755		1,815.00
	ACX2886480M	Order for Direct Battery Connection	M139755		1,815.00
FIELD INSTALLED KITS - (order as desired)					**GROUP 99**
	700964017M	Knotter Trip Kit (Requires Module Kit - 700960668M)	M84161		1,093.00
	700960673M	Hydraulic Jack Kit	M88319		1,147.00
	700960977M	Roller Bale Chute (2200 series only)	M259721		3,373.00
	700960800M	Bale Weight Kit (Requires Module Kit -700960668M)	M149226		1,938.00
	700960668M	Module Kit	M79079		1,027.00
	MK41208	Flat Bale Chute (Required if AC25 Bale Accumulator is not used)	M126973		1,649.00
	700963607M	Chain Lube Kit for Packer Baler	M124201		1,613.00
	700963608M	Chain Lube Kit for Cutter Baler	M155694		2,022.00
	700963426M	Transit Coating (Factory Applied) (Recommended for shipments occurring in November through March 31)	M80619		1,047.00
ORDER FROM PARTS					
	ACZ000181A	Telemetry-STD Plus MUST BE ORDERED WITH 700179375			ORDER FROM PARTS
	700179375	Telemetry-Installation Kit MUST BE ORDERED WITH ACZ000181A			ORDER FROM PARTS
	700741496	French Operators Manual and Decal Kit		2	No Charge
	700741498	Spanish Operators Manual and Decal Kit		2	No Charge

For Information on AGCO Hay Preservative and Applicators For Balers, See Pages 85 & 86.

HESSTON by MASSEY FERGUSON

2270 LARGE RECTANGULAR BALER

FOB Hesston, KS
CLASS 5 Baler

STANDARD EQUIPMENT

47.2" x 34.4" (1.2m x .9m) Bale Chamber
102.2" (2.6m) Wide Pickup with Gathering Augers, Gauge Wheels and Hydraulic Lift
Knotter Fan
Bale Counter (in Monitor)
Bale Length Adjustable Up to 108" (2.7m)
Automatic Knotter Lube
Plunger Speed: 47 Strokes per minute
Plunger Stroke: 29.1" (.7m) Long
Tying Mechanism - 6 Heavy Duty Double Knotters
Lights for Night Operation
Warning Lights
Parking Jack
Safety Chain
Selectable Bale Ejection- Partial or Full
E-Coat Primer with Powder Paint
Removable Gauge Wheels
Roller Windguard
Diamond Drive Chains
Twine Requirements - Heavy Duty Plastic
Fork Type Feed System Packing into Separate Charge Chamber
Bale Case Compression - 2 Hydraulic Cylinders Provide Compression to Top and Side Members
Automatic Density Control Monitors Plunger and Automatically Controls Hydraulic Cylinders on Bale Case
Twine Boxes - 30 Ball Capacity
On-Board Hydraulic System
Silage Ready (Roller Chute Recommended)
Folding Safety Rails

ProCut™ Rotor Cutter
'V' Shaped Rotor Pattern Design - 25.5" (650mm) Diameter
Bolt on Finger Sections
Hydraulic Drop Down & Slide-out Knife Bed Drawer
• 26 knives at 1.5" cut lengths
Easily Removable Knives with No Tools Required

Tractor Requirements
130 PTO HP (minimum), 1000 RPM
200 PTO HP (minimum), 1000 RPM, for Cutter Units
One Double Acting Remote Valve - Cutter (if equipped)
One Double Acting Remote Valve - Pick-up
One Single Acting Remote Valve - Tandem Option

Bale Control Monitor required to Operate Baler (See Group 98)

Order Code	Catalog Number	Description	Factory Code	Approx. Weight(lb)	List Price
ONE ITEM FROM EACH GROUP MUST BE SPECIFIED UNLESS NOTED OTHERWISE					
BASE MACHINE					**GROUP 01**
MF2270-Q703	ACX3486650	2270 Large Rectangular Baler	M13364197	11360	173,561.00
MF2270-Q701	ACX3486660	2270 Large Rectangular Baler with ProCut™ Rotor Cutter.	M14930069		193,897.00
AXLE					**GROUP 02**
50-Q501	ACX2574140	Single Axle with 700/50-22.5, 16 Ply Tires, Less Brakes			**In Base**
50-Q503	ACX2574130*	Single Axle with 700/50-22.5, 16 Ply Tires with Hydraulic Brakes	M288288		3,744.00
50-Q508	ACX2757470*	Single Axle w/ 700/50-22.5, 16 Ply Tires with Air Brakes	M326172		4,236.00
50-Q502	ACX2539670	Tandem Axle w/ 500/45x22.5, 12 Ply Tires, Less Brakes	M880726	1780	11,438.00
50-Q504	ACX2539660*	Tandem Axle w/ 500/45x22.5, 12 Ply Tires with Hydraulic Brakes	M1365826	1780	17,738.00
50-Q505	ACX2539650*	Tandem Axle w/ 500/45x22.5, 12 Ply Tires w/ Air Brakes.	M1406790		18,270.00
***5 MONTH LEAD TIME REQUIRED**					
TIRE UPGRADE - OPTIONAL					**GROUP 03**
75-B114	ACX3306660	Upgrade to 620/40R X 22.5 tires (Tandem Axle only)	M383152		4,976.00
LUBRICATION- OPTIONAL					**GROUP 04**
30-B901	ACX2449780	Automatic Chain Lubrication System - Packer Baler	M113190		1,470.00
30-B902	ACX2449790	Automatic Chain Lubrication System - Cutter Baler	M143990		1,870.00

2270 LARGE RECTANGULAR BALER

Order Code	Catalog Number	Description	Factory Code	Approx. Weight(lb)	List Price
DRIVELINE- FIELD INSTALLED - Required					**GROUP 05**
	MK41290	Type 2, 1-3/8” 21-Tooth PTO	M65142	50	846.00
	MK41213	Type 3, 1-3/4” 20-Tooth PTO	M104104	50	1,352.00
BALE CONTROL MONITOR - FIELD INSTALLED					**GROUP 98**
Includes Datatronic 5 monitor, harness, power adapter and hardware to mount Console inside the tractor cab. Required for tractors not equipped with ISO 11783 plug and Console.					
	ACX2886460M	Order for NA Built Tractor Plug (3 Blade AMP)	M139755		1,815.00
	ACX2886470M	Order for EU Built Tractor Plug (3 Round Pin)	M139755		1,815.00
	ACX2886480M	Order for Direct Battery Connection	M139755		1,815.00
FIELD INSTALLED KITS - (order as desired)					**GROUP 99**
	ACX3508420M	Top Auger Kit	M169092		2,196.00
	700964017M	Knotter Trip Kit (Requires Module Kit - 700960668M)	M84161		1,093.00
	700960673M	Hydraulic Jack Kit	M88319		1,147.00
	700960800M	Bale Weight Kit (Requires Module Kit -- 700960668M)	M149226		1,938.00
	700960668M	Module Kit	M79079		1,027.00
	700960977M	Roller Bale Chute (2200 series only)	M259721		3,373.00
	MK41208	Flat Bale Chute (Required if AC25 Bale Accumulator is not used)	M126973		1,649.00
	700963607M	Chain Lube Kit for Packer Baler	M124201		1,613.00
	700963608M	Chain Lube Kit for Cutter Baler	M155694		2,022.00
	700963426M	Transit Coating (Factory Applied) (Recommended for shipments occurring in November through March 31ST)	M80619		1,047.00
ORDER FROM PARTS					
	ACZ000181A	Telemetry-STD Plus MUST BE ORDERED WITH 700179375			ORDER FROM PARTS
	700179375	Telemetry-Installation Kit MUST BE ORDERED WITH ACZ000181A			ORDER FROM PARTS
	700741496	French Operators Manual and Decal Kit		2	No Charge
	700741498	Spanish Operators Manual and Decal Kit		2	No Charge

For Information on AGCO Hay Preservative and Applicators For Balers, See Pages 85 & 86.

HESSTON by MASSEY FERGUSON

2250 LARGE RECTANGULAR BALER

FOB Hesston, KS
CLASS 4 BALER

STANDARD EQUIPMENT

31.5" x 34.4" (.8m x .9m) Bale Chamber
Bale Length Adjustable Up to 108" (2.7m)
Knotter Fan
Parking Jack
On-Board Hydraulic System
102.2" (2.6m) Wide Pickup w/ Gathering Augers, Gauge Wheels, & Hydraulic Lift
Fork Fed Charge Chamber
Plunger Speed - 47 Strokes per Minute
Plunger Stroke - 29.1" (.7m)
Automatic Density Control
Safety Chain
Folding Safety Rails
Lights for Night Operation
Selectable Bale Ejection- Partial or Full
E-Coat Primer with Powder Paint
Removable Gauge Wheels
Roller Windguard
Diamond Drive Chains
Bale Chamber Compression - 2 Hydraulic Cylinders
Tying Mechanism- 4 Heavy Duty Double Knotters
Twine Boxes - 30 Ball Capacity
Twine Requirements - Heavy Duty Plastic
Automatic Knotter Lube
Bale Ejector
Silage Ready (Roller Chute Recommended)

ProCut™ Rotor Cutter
'V' Shaped Rotor Pattern Design-25.5" (650mm) Dia.
Bolt on Finger Sections
Hydraulic Drop Down & Slide-out Knife Bed Drawer
- 17 knives at 1.5" cut lengths

Easily Removable Knives with No Tools Required

Tractor Requirements:
120 PTO HP (90kw) minimum without cutter
150 PTO HP (112kw) recommended without cutter
180 PTO HP (134kw) minimum with cutter
One double acting remote valve- pickup
One single acting remote valve- tandem axle (if equipped)
One double acting remote valve- cutter (if equipped)
Bale Control Monitor required to operate Baler (See Group 98)

Order Code	Catalog Number	Description	Factory Code	Approx. Weight(lb)	List Price
ONE ITEM FROM EACH GROUP MUST BE SPECIFIED UNLESS NOTED OTHERWISE					
BASE MACHINE					**GROUP 01**
MF2250~Q703	ACX3486570	2250 Large Rectangular Baler	M10086230		130,990.00
MF2250~Q701	ACX3486580	2250 Large Rectangular Baler with ProCut™ Rotor Cutter.	M11578875		150,375.00
AXLE					**GROUP 02**
50-Q501	700964091	Single Axle with 600-50 x 22.5, 12 Ply Tires, Less Brakes.			**In Base**
50-Q503	700964092*	Single Axle with 600-50 x 22.5, 12 Ply Tires, with Hydraulic Brakes	M268961		3,493.00
50-Q508	700964093*	Single Axle w/ 600-50 x 22.5, 12 Ply Tires w/ Air Brakes	M304073		3,949.00
50-Q502	700960783	Tandem Axle with 500-50 x 17, 16 Ply, Less Brakes	M815045		10,585.00
50-Q504	700964095*	Tandem Axle with 500-50 x 17, 16 Ply with Hydraulic Brakes	M1166858		15,154.00
50-Q505	700964096*	Tandem Axle w/ 500-50 x 17, 16 Ply w/ Air Brakes	M1320781		17,153.00
***5 MONTH LEAD TIME REQUIRED**					
TIRE UPGRADE - OPTIONAL					**GROUP 03**
75-B114	ACX3306030	Upgrade to 620/40R X 22.5 tires (Tandem Axle only)	M383152		4,976.00
LUBRICATION- OPTIONAL					**GROUP 04**
30-B901	700963605	Automatic Chain Lubrication System - Packer Baler	M113190		1,470.00
30-B902	700963606	Automatic Chain Lubrication System - Cutter Baler	M143990		1,870.00

2250 LARGE RECTANGULAR BALER

Order Code	Catalog Number	Description	Factory Code	Approx. Weight(lb)	List Price
DRIVELINE- FIELD INSTALLED - Required					**GROUP 05**
	MK41290	Type 2, 1-3/8” 21-Tooth PTO	M65142	50	846.00
	MK41213	Type 3, 1-3/4” 20-Tooth PTO	M104104	50	1,352.00
BALE CONTROL MONITOR-FIELD INSTALLED					**GROUP 98**
Includes Datatronic 5 monitor, harness, power adapter and hardware to mount Console inside the tractor cab. Required for tractors not equipped with ISO 11783 plug and Console.					
	ACX2886460M	Order for NA Built Tractor Plug (3 Blade AMP)	M139755		1,815.00
	ACX2886470M	Order for EU Built Tractor Plug (3 Round Pin)	M139755		1,815.00
	ACX2886480M	Order for Direct Battery Connection	M139755		1,815.00
FIELD INSTALLED KITS - (order as desired)					**GROUP 99**
	ACX3508420M	Top Auger Kit	M169092		2,196.00
	700964017M	Knotter Trip Kit (Requires Module Kit - 700960668M)	M84161		1,093.00
	700960673M	Hydraulic Jack Kit	M88319		1,147.00
	700960801M	Bale Weight Kit (Requires Module Kit -700960668M)	M149226		1,938.00
	700960668M	Module Kit.	M79079		1,027.00
	700960978M	Roller Bale Chute (2200 series only)	M257411		3,343.00
	MK41242	Flat Bale Chute Kit (Required if AC20 Accumulator is not ordered)	M57750	134	750.00
	700963607M	Chain Lube Kit for Packer Baler	M124201		1,613.00
	700963608M	Chain Lube Kit for Cutter Baler	M155694		2,022.00
	700963426M	Transit Coating (Factory Applied) (Recommended for shipments occurring in November through March 31ST)	M80619		1,047.00
ORDER FROM PARTS					
	ACZ000181A	Telemetry-STD Plus MUST BE ORDERED WITH 700179375			ORDER FROM PARTS
	700179375	Telemetry-Installation Kit MUST BE ORDERED WITH ACZ000181A			ORDER FROM PARTS
	700741496	French Operators Manual and Decal Kit.		2	No Charge
	700741498	Spanish Operators Manual and Decal Kit.		2	No Charge

For Information on AGCO Hay Preservative and Applicators For Balers, See Pages 85 & 86.

HESSTON by MASSEY FERGUSON

AC25 BALE ACCUMULATOR

Primary Color; Grey

FOB Beloit, KS

STANDARD EQUIPMENT

Attaches to and is towed by 2290, 2270, 2270XD Balers
Capacity - Three Bales
Electronic Bale Shift Control Built into Baler Control Console
Electronic Monitoring built into Baler Control Console
Centralized Lube System - One 12 Point Positive Displacement Grease Divider Valve plus One Direct Lube Line
Width: 156" (4m)
Bale Size - 48" Wide x 51" High x 81" to 108" Long (1.2m Wide x 1.3m High x 2.1m to 2.7m Long)
Axle Type - 2 Dual Wheel Casters with Stabilizing Brake
Four 9.5L x 14 Tires
Bale Unloading Control - Electrical Standard, Operator Controlled
Hydraulics - Solenoid Valve Mounted to Rear of Baler, uses Baler Hydraulic Circuit

Order Code	Catalog Number	Description	Factory Code	Approx. Weight(lb)	List Price
ONE ITEM FROM EACH GROUP MUST BE SPECIFIED UNLESS NOTED OTHERWISE					
BASE MACHINE					**GROUP 01**
MFAC25	700734307	AC25 Bale Accumulator	M1868559	3292	24,267.00
MOUNTING KITS - REQUIRED FOR USE					**GROUP 02**
	700739350M	Mounting Kit, Required for 2270, 2270XD and 2290	M122584	215	1,592.00
FIELD INSTALLED KITS - (order as desired)					**GROUP 99**
	MK41298*	Bale Weight Scales	M585046	161	7,598.00

*Roller bale chute and roller chute scale kit cannot be used with accumulator. Order accumulator scale kit MK41298 if bale weight is desired. Bale weight is displayed on console identical to roller scale kit. No baler Module kit required with accumulator scale kit.

ORDER FROM PARTS

700734321	French Operators Manual and Decal Kit		2	No Charge
700734322	Spanish Operators Manual and Decal Kit		2	No Charge

***** Mounting Kit 700739350M can also be used to mount Hesston 4925 Accumulator to a 2290, 2270 or 2270XD.

AC20 BALE ACCUMULATOR

Primary Color; Grey

FOB Beloit, KS

STANDARD EQUIPMENT

Attaches to and is towed by 2250 Baler
Capacity - Five Bales
Electronic Bale Shift Control Built into
Baler Control Console
Electronic Monitoring built into
Baler Control Console
Centralized Lube System - One 12 Point Positive
Displacement Grease Divider Valve plus
One Direct Lube Line
Width: Wings Down - 176" (4.5m)
Wings Up - 129" (3.3m)
Bale Size - 31.5" Wide x 34.4" High x 60" to 98" Long
(.8m Wide x .9m High x 1.5m to 2.5m Long)
Axle Type - 2 Dual Wheel Casters with Stabilizing Brake
Bale Unloading Control - Electrical Standard,
Operator Controlled
Hydraulics - Solenoid Valve Mounted to Rear of Baler,
uses the same Tractor Hydraulic Circuit

Order Code	Catalog Number	Description	Factory Code	Approx. Weight(lb)	List Price
ONE ITEM FROM EACH GROUP MUST BE SPECIFIED UNLESS NOTED OTHERWISE					
BASE MACHINE					**GROUP 01**
MFAC20	700734331	AC20 Bale Accumulator	M1886808	3455	24,504.00
MOUNTING KITS - Required for Use					**GROUP 02**
	700734454M	Accumulator Mounting Kit, Required for MF2250	M118503	199	1,539.00
ORDER FROM PARTS					
	700728991	French Operators Manual and Decal Kit		2	No Charge
	700728992	Spanish Operators Manual and Decal Kit		2	No Charge

***** Mounting Kit 700734454M can also be used to mount Hesston 4720 Accumulator to a MF2250.

MASSEY FERGUSON®

HayBoss G2

SOURCED FROM AGCO PARTS

The following Information will help you with the selection of your AGCO Hay Preservative Application System Selection.

1. The HayBoss 700 Series is controlled with baler ISO Terminal, OR with the use of a 3rd Generation iPad Mini 2 and the Precision Baling App.
2. The HayBoss 700 Series Premium display upgrade (part # HT7670DK) as a stand alone monitor.
3. The HayBoss 300 Series for Round & Small Square Balers is controlled using a 3rd Generation iPad Mini 2 & the Hay App

Preservative Transfer Pumps	
12V Electric Transfer Pump (4-gallons per minute)	HT9212
12V Electric High-Output Transfer Pump (15-gallons per minute)	HT9214
110V Electric Transfer Pump (4-gallons per minute)	HT9215
Tote transfer kit - couplings to drain tote using 3/4" hose. Gravity fed	H8-9212A
AGCO Hay Preservative - U.S.	
Drum - 13 U.S. gallons/49.2 liters (120 lb/54.5 kg) (Not Available in California)	HT15DR
Drum - 50 U.S. gallons/189.3 liters (450 lb/204 kg) (Not Available in California)	HT55DR
4 Drums per Pallet - each drum 50 U.S. gallons/189.3 liters; 200 total U.S. gallons/757 liters (1,800 lb/817 kg per pallet) (Not Available in California)	HT55DR-PQ
Tote - 200 U.S. gallons/757 liters (1,800 lb/817 kg)	HT200MB
Tote - 270 U.S. gallons/1,021.8 liters (2,380 lb/1,079.6 kg)	HT270MB
AGCO Hay Preservative - Canada	
Drum - 13 U.S. gallons/49.2 liters (120 lb/54.5 kg)	HT15DRC
Drum - 50 U.S. gallons/189.3 liters (450 lb/204 kg)	HT55DRC
4 Drums per Pallet - each drum 50 U.S. gallons/189.3 liters; 200 total U.S. gallons/757 liters (1,800 lb/817 kg per pallet)	HT55DR-PQC
Tote - 270 U.S. gallons/1,021.8 liters (2,380 lb/1,079.6 kg)	HT270MBC

Description	Hayboss 700 Series	Hayboss 600 Series	HayBoss 300 Series	Electronic	Manual	Tank Size	Upgrade Electronic to HayBoss 700 Series
2050	HT7964494C			HT4914494		110 gal	HT7654494C
2050 With Roto-Cutter	HT7964500C			HT4914500		110 gal	HT7654500C
2150, 2160, 2170, 2170XD, 2190, 2250, 2270, 2270XD & 2290	HT7964518C			HT4914518		110 gal	HT7654518C
2150, 2160, 2170, 2190, 2250, 2270, & 2290 With Roto-Cutter	HT7964519C			HT4914519		110 gal	HT7654519C
2170XD & 2270XD w/ Roto-Cutter	HT7964530C			HT4914530		110 gal	HT7654530C
2150 & 2250 With Packer-Cutter	HT7964527C			HT4914527		110 gal	HT7654527C
2250 & 2270 With Procut	HT7964542C			HT4914542		110 gal	HT7654542C
2370 UHD	HT7964544C			HT4914544		110 gal	HT7654542C
4160V, 4180V			HT331	HT431		20 gal	
1734, 1744, 1745, 1746, & 1756			HT3464484C	HT4414484	HT4394484	25 gal	
2745, 2746, 2746A, 2756, 2756A, 2766		HT6494508B	HT3494508C	HT4484508		55 gal	
2846, 2846A, 2856, 2856A, 2946, 2946A, 2956 & 2956A		HT6494524B	HT3494524C	HT4484524		55 gal	
1835,1836, 1837, 1838, 1839, 1840, 1841,1842 – Tank mount to top of bale chamber		HT6444416B	HT3444416C	HT4344416	HT4324416	55 gal	
1835,1836, 1837, 1838, 1839, 1840, 1841,1842 – Tank mount RH sid of bale chamber (requires rear hitch)		HT6444417B	HT3444417C	HT4344417	HT4324417	55 gal	
1843N, 1843S		HT6504502B	HT3504502C	HT4484502		55 gal	
1844N & 1844S		HT6504485B	HT3504485C	HT4484485		55 gal	

SOURCED FROM AGCO PARTS

Individual Bale Identification, G2 RFV Calculator, Upgrade Kits and Accessories for Large Square Balers

Moisture Only Kits	
Small Square Balers	
Moisture Only for Small Square Balers - no monitor included. Use customer phone/tablet or use H30-2670DK	HT201SS
Round Balers	
Moisture Only for Round Balers - Universal - no monitor included. Use customer ipad or use H30-2670DK	HT201RB
Large Square Balers	
Moisture Only – All 21/2200 Series and CH LB33B, LB34B, LB34BXD & LB44B. HayBoss 700 Series Processor, rate and end-of-bale sensors and Starwheel moisture sensors (monitor not included - display through baler ISO VT or tablet)	HT700A
Moisture Only – AGCO Brand Balers Prior to the New Generation (2007) and All Other Baler Brands. HayBoss 700 Series Processor, rate and end-of-bale sensors and Starwheel moisture sensors (monitor not included - display through tablet)	HT700
Moisture Only (for MF 2370 UHD only)	HT700UHD
Large Square Balers - Microwave Upgrade Kits (upgrade to current 700 Series)	
Microwave Moisture Bale Chute Kit for Large Square Balers - Upgrade to HT700 moisture kits (positioned rear of bale chamber)	HT771MWM
Large Square Balers - Microwave Upgrade Kits (upgrade to current 700 Series)	
Microwave Moisture Pre-compression Chamber Kit for Large Square Balers - Upgrade to 796 Applicator kits (for preservative application)	HT770MWM

Dye Spray Marker Kits	
Dye Spray Marker Kit for Large Square Balers Only - RFV Equipped (Compatible with HayBoss 700 Series Only)	HT745RFV
Blue Dye for Dye Spray Kit for Large Square Balers Only - RFV Equipped.	HT0801
Moisture Dye Sprayer Kit for Large Square Balers (Compatible with HayBoss 700 Series Only)	HT740DM
Moisture Dye Sprayer Kit for Small Square and Round Baler Moisture only kits (Requires HT201SS OR HT201RB base kit)	HT200DM
Red Dye for moisture dye marker	HT0800

Displays and Accessories	
Field Ready iPad Mini monitor - includes iPad Mini, Precision Bale App preloaded, case, mount, and charging device. For use with 300/600/700 Series	H30-2670DK
Harvest Tec Virtual Terminal – 700 series only. Premium monitor upgrade. Applicator must be disconnected from baler ISOBUS	HT7670DK
Shut-Off Eye Kit – 700 Series Large Square Baler Applicator Kits manufactured in 2020 & later,	HT474C
Shut-Off Eye Kit – 3/4/5/600 Series Hayboss and Electronic Applicator kits	HT474A
Hayboss 700 Series GPS with receiver – records bale position in job record	HT780GPS

The Shut-Off Eye Kit is compatible with all types of applicators (electronic, automatic). It automatically adjusts applicator operation in response to hay movement through the pickup head. For example, when turning at the field's end, the eye turns the spray mechanism off; when the baler is back in the windrow, the eye turns the applicator back on.

Large Square Baler - Bale Weight and Length Kits
One of the features of the HayBoss 700 Series is that by adding a Bale Weight Kit you can capture the actual weight of the bale within the operating system as well as calculator RFV of alfalfa. To learn more about the benefits of using the Bale Weight kit in conjunction with the HayBoss 700 Series System, please contact your AGCO Parts Field Parts Manager.

Bale Weight and Length Kits are available for Massey Ferguson, Challenger and AGCO Balers for the model years of 2009 and later.

Referral Attachments

As the large square baler and round baler markets expand in North America, your customers continue to explore more efficient methods to handle their bales. The equipment manufacturer below offers cost effective, reliable, and durable equipment to complement AGCO's haytool business.

AGCO does not represent these products or company or offer terms or warranty. When installed and operated according to the manufacture's instructions, these attachments will not void AGCO warranty of the AGCO new products. The availability, performance, service parts availability, pricing after sale service and warranty of these products is the sole responsibility of the manufacturer and not of AGCO. Some products will not be available in all markets of the United States or of Canada.

Self-Propelled & Pull-Type Large Square Bale Wagons & Stackers
Mil-Stak Large Bale Stackers

2201 Hwy 30 West
Fruitland, Idaho 83619
Phone: 208-452-6045
Email: **info@milstak.com**
http://www.milstak.com

MASSEY FERGUSON®

Reserved

MASSEY FERGUSON®

PLANTERS

MASSEY FERGUSON®

Table of Contents

Massey Ferguson Planters

Positive Air Rigid Frame Planters 3
VE Wing Fold Planter 13
VE Front Fold Planters. 23
VE Track Planter 43

MFPR

Positive Air Rigid Frame Planters

F.O.B. Beloit, Kansas

STANDARD EQUIPMENT

- 7" x 7" Rigid Frame
- Hydraulic Lift with all Cylinders, Hoses and Transport Lock-Up
- Planter Units with Positive Air Chain Drive Seed Meters
  15.8 x .138 inch (401.3 x 3.5 mm) Double Disc Openers
  4.5 x 16 inch Walking Beam Gauge Wheels
- Direct Drive Quick Couplers
- Transport Wheels with 9.5L-15, 6 Ply Tires
- Highway Transport Lighting
- Highway Transport Chain
- Seed Drain Kit
- High Rate Sensors
- Ground Drive
- Central Blower, Manifold, Flow Control Valve and Air Pressure Gauge

Transport and Frame Specifications

Transport and Frame Specifications						
Model	# Rows	Spacing	Center Frame	Transport Width	Transport Wheels	Total Wheels
MFPR6-30	6	30"	173"	193"	4	4
MFPR8-30	8	30"	228"	249"	4	4

Shipping Dimensions				
Model	Length (mm)	Height (mm)	Width (mm)	Weight (kg)
MFPR6-30	15' 4" (4665)	8' 6" (2604)	4' 0" (1220)	3,591 (1629)
MFPR8-30	19' 10" (6041)	8' 6" (2604)	4' 0" (1220)	4,738 (2149)

Ordering Instructions:
Planters are now Available with many Items Factory Installed
Factory Installed Items are not Eligible for Return to the Factory

1. Select One Order Code from Base, and One Order Code from Each Group as Required
2. Order Required Seed Discs from Dealer Installed Section
3. Additional Dealer Installed Items can be Ordered for these Models (such as Fertilizer Attachments) from this Chapter and from Dealer Installed Section
4. Accepts Row Unit or Frame Mounted Tillage Attachments

NOTE: Direct Drive Requires 2 Remote Valves

ORDER CODE	CATALOG NUMBER	DESCRIPTION	FACTORY CODE	APPROX. WEIGHT (lb.)	LIST PRICE
POSITIVE AIR RIGID FRAME PLANTERS					
MFPR6-30	ACX3383530	Positive Air Rigid Frame, 6 Row 30-inch	57C19512		25,341.00
MFPR8-30	ACX3383540	Positive Air Rigid Frame, 8 Row 30-inch	60C24624		31,980.00

ORDER CODE	CATALOG NUMBER	DESCRIPTION	FACTORY CODE	APPROX. WEIGHT (lb.)	LIST PRICE
Markers (Factory Installed) - Order One Set per Planter					**Required**
		6 Row Planter			
2-P201	6000263	Rigid Markers - Factory Installed.	33C1023	229	1,329.00
	6100094M	Notched Marker Disc - Dealer Installed	07C378	41	491.00
2-P202	6000265	Without Markers			No Charge
	6000362M	Without Marker Disc			No Charge
		8 Row Planter			
2-P211	6000264	Folding Markers - Factory Installed	08C2236	246	2,904.00
	6100094M	Notched Marker Disc - Dealer Installed	07C378	41	491.00
	6001159M	Flat Folding Break-Away Markers - Dealer Installed with Notched Marker Discs **(Build to Order)**	04C4583	950	5,952.00
2-P202	6000267	Without Markers			No Charge
	6000362M	Without Marker Disc			No Charge
Hydraulic Supply System (Dealer Installed) - Order One per Planter					**Optional**
	6001047M	540 RPM PTO Pump	73C1269	37	1,649.00
	6001048M	1000 RPM PTO Pump with 1-3/8 inch Spline Shaft	55C1397	34	1,815.00
Seed Hoppers and Positive Air Meters (Factory Installed) - See Order Requirements Below					**Required**
		6 Row Planters			
5-HO12	6400866	Set of 6 Two-Bushel Hoppers and Meters - Factory Installed (Order one per Planter)	60C4604	30	5,980.00
	6001647M	Three-Bushel Hopper and Meter - Dealer Installed . . . . . (Order one per Row)	92C766	35	996.00
5-HO10	6400865	Without Hoppers and Meters. . . . . (Order one per Planter)			No Charge
		8 Row Planters			
5-HO12	6400981	Set of 8 Two-Bushel Hoppers and Meters - Factory Installed (Order one per Planter)	33C5104	30	6,629.00
	6001647M	Three-Bushel Hopper and Meter - Dealer Installed . . . . . (Order one per Row)	92C766	35	996.00
5-HO10	6400880	Without Hoppers and Meters. . . . . (Order one per Planter)			No Charge

MASSEY FERGUSON®

ORDER CODE	CATALOG NUMBER	DESCRIPTION	FACTORY CODE	APPROX. WEIGHT (lb.)	LIST PRICE
Seed Discs					**Optional**
Seed Disc Positive Air Meters - Order <u>One Per Two</u> Row Units (Unless Otherwise Noted)					
	6100024M	Large Corn Seed Disc . . . . . (30 Cell) (1,100 - 1,400 seeds per lb.)	88C033	1	44.00
	6100023M	Regular Corn Seed Disc . . . . . (30 Cell) (1,300 - 1,900 seeds per lb.)	88C033	1	44.00
	6100032M	Small Corn Seed Disc . . . . . (30 Cell) (1,600 - 2,800 seeds per lb.)	88C033	1	44.00
	6001839M	Flat Corn Seed Disc . . . . . (30 Cell) (1200 - 2100 seeds per lb.)	88C033	1	44.00
	6000709M	Extremely Small Corn/Popcorn Seed Disc . . . . . (30 Cell) (3,200 - 4,500 seeds per lb.)	88C033	1	44.00
	6100027M	Very Small Corn, Sunflower, Popcorn Seed Disc . . . . . (30 Cell) (2,400 - 3,600 seeds per lb.)	88C033	1	44.00
	6001000M	Small Sunflower Seed Disc . . . . . (30 Cell) (22/64-26-64 Length x 11/64-18/64 girth)	88C033	1	44.00
	6001001M	Tickler Brush, Special . . . . . (Order One for Eight Rows) (For use with 6001000)	59C051		67.00
	6000698M	Small Soybean Seed Disc . . . . . (120 Cell) (3,000 - 4,500 seeds per lb.)	88C033	1	44.00
	6100025M	Soybean Seed Disc (120 Cell)	88C033	1	44.00
	6100026M	Soybean Seed Disc (60 Cell)	88C033	1	44.00
	6000703M	Sugar Beet Seed Disc . . . . . (60 Cell) (for 4M Sugar Beet Pellets) (9.5/64 - 11.5/64 Dia. Seed, 12,000 - 14,000 seeds per lb.) (For Milo, 13,500 - 17,500 seeds per lb.)	88C033	1	44.00
	6100031M	Edible Bean Seed Disc (50 Cell)	88C033	1	44.00
	6100253M	Natto Bean Seed Disc (120 Cell)	04C117	3	152.00
	6100028M	Cotton - Large Pelletized Sugar Beet Seed Disc (60 Cell) . .	88C033	1	44.00
	6001311M	Small Cotton Seed Disc . . . . . (60 Cell) (4,000 - 4,800 seeds per lb.)	88C033	1	44.00
	6100130M	Hill Drop Cotton Seed Disc (20 Cell) (3 seeds per hill)	04C117	3	152.00
	6001840M	Canola Seed Disc (120 Cell) . . . . . (Seed size: 0.075 to 0.110 inches) (1.905 to 2.794 mm)	88C033	1	44.00
	6100029M	Sorghum-Milo Seed Disc (120 Cell)	88C033	1	44.00
	6100129M	Segmented Sugar Beet Seed Disc. . . . . (60 Cell) (8/64 - 11/64 Dia. Seed, 27,500 - 42,000 seeds per lb.) (for 2M Sugar Beet Pellets, Pelletized)	88C033	1	44.00
	6001946M	Components for 60 Cell Sugar Beet Seed Disc . . . . . (9000 Series) (Includes Conductive Cutoff Brush)	50C038		50.00
	6100254M	Sugar Beet Seed Disc . . . . . (60 Cell) (for 5M Sugar Beet Pellets) (11/64 - 14/64 Dia. Seed, 8,500 seeds per lb.)	04C117	3	152.00
	6100106M	Snap Bean Seed Disc . . . . . (60 Cell) (1,200 - 2,500 seeds per lb.)	88C033	1	44.00
	6100222M	Wheat Seed Disc.	88C033	1	44.00
	6001125M	High Rate Virginia Peanut Seed Disc . . . . . (38 Cell / High Air Flow) (550 seeds per lb.)	04C117	3	152.00

ORDER CODE	CATALOG NUMBER	DESCRIPTION	FACTORY CODE	APPROX. WEIGHT (lb.)	LIST PRICE
Row Unit Gauge Wheels (Factory Installed) - Order One per Planter					**Optional**
41-GW02	ACX3383510	Row Unit Solid Gauge Wheels - 4-1/2 inch (6 Row)	56C791		1,028.00
41-GW02	ACX3383520	Row Unit Solid Gauge Wheels - 4-1/2 inch (8 Row)	90C1054		1,370.00
41-GW01	ACW7056890	Without Row Unit Gauge Wheels (Gauge Wheel Mounting Hardware is NOT Present with this Selection)			No Charge
Row Unit Gauge Wheel Scapers (Factory Installed) - Order One per Planter					**Optional**
7-PS01	6400878	Row Unit Gauge Wheel Scrapers for 6 Row Planter	64C178		232.00
7-PS01	6400989	Row Unit Gauge Wheel Scrapers for 8 Row Planter	93C237		309.00
Closing System (Dealer Installed) - Order One per Row					**Required**
	ACX3100690M	Angled Bracket with Rubber Closing Wheels	16C237	19	308.00
	ACX3100700M	Angled Bracket with Cast Closing Wheels	12C274	54	356.00
	ACX3100710M	Angled Bracket without Closing Wheels	98C133		174.00
	6001649M	Without Closing Wheels			No Charge
Down Pressure System (Factory Installed) - Order One per Planter					**Required**
		6 Row Planters			
23-KB12	6400870	Heavy Duty Down Pressure Springs	42C1036	12	1,346.00
23-KB10	6400027	Without Down Pressure Springs			No Charge
		8 Row Planters			
23-KB12	6400983	Heavy Duty Down Pressure Springs	46C1384	12	1,798.00
23-KB10	6400027	Without Down Pressure Springs			No Charge
Down Pressure Springs (Dealer Installed) - Order One per Two Row Units					**Optional**
	6000588M	Heavy Duty Down Pressure Springs (30 - 480 lbs)	42C343	24	446.00
Pneumatic Down Pressure (Dealer Installed) - Order One per Planter					**Optional**
Note: These 3 Kits Subject to Availability					
	ACX3512240M	Pneumatic Down Pressure (4 Row Set) Order One per 4 Rows (Requires Compressor and Hose)	20C739		960.00
	6001466M	Pneumatic Down Pressure Compressor	85C696	20	905.00
	6001370M	Pneumatic Down Pressure Hose (100 Feet) (Will Plumb Up to 12 Rows)	15C150		195.00

MASSEY FERGUSON®

ORDER CODE	CATALOG NUMBER	DESCRIPTION	FACTORY CODE	APPROX. WEIGHT (lb.)	LIST PRICE
Row Unit Mounted Tillage (Factory Installed) - Order One per Planter					**Required**
Heavy Duty Down Pressure Springs or Pneumatic Down Pressure Recommended					
		6 Row Planters			
25-VA10	6400021	Without Unit Mounted Tillage Attachment			No Charge
25-VA13	6400555	Tillage Coulter with Ripple Blade.	11C1573	41	2,043.00
25-VA15	6400571	Tillage Coulter with 13 Flute Blade.	11C1573	41	2,043.00
25-VA18	6400579	Tillage Coulter with 25 Flute Blade.	81C1657	41	2,153.00
25-VA16	6400871	Residue Manager - Finger Wheel 13-inch Steel Wheel with 16 Fingers (For Use without Tillage Coulters)	61C1919	37	2,493.00
25-VA19	6400872	Residue Manager - SharkTooth® Wheel 13-inch Steel Wheel with 12 Teeth (For Use without Tillage Coulters)	61C2073		2,693.00
25-VA20	6400873	Floating Residue Manager - SharkTooth® Wheel with Depth Band, 13-inch Steel Wheel with 12 Teeth (For Use without Tillage Coulters)	50C2810		3,650.00
25-VA11	6400539	Tillage Coulter without Blade. (Order Dealer Installed Coulter Blades)	74C1356		1,762.00
		8 Row Planters			
25-VA10	6400021	Without Unit Mounted Tillage Attachment			No Charge
25-VA13	6400556	Tillage Coulter with Ripple Blade.	48C2097	41	2,724.00
25-VA15	6400572	Tillage Coulter with 13 Flute Blade.	48C2097	41	2,724.00
25-VA18	6400580	Tillage Coulter with 25 Flute Blade.	48C2097	41	2,724.00
25-VA16	6400984	Residue Manager - Finger Wheel 13-inch Steel Wheel with 16 Fingers (For Use without Tillage Coulters)	48C2559	37	3,324.00
25-VA19	6400985	Residue Manager - SharkTooth® Wheel 13-inch Steel Wheel with 12 Teeth (For Use without Tillage Coulters)	84C2765		3,592.00
25-VA20	6400986	Floating Residue Manager - SharkTooth® Wheel with Depth Band, 13-inch Steel Wheel with 12 Teeth (For Use without Tillage Coulters)	36C3748		4,868.00
25-VA11	6400540	Tillage Coulter without Blade. (Order Dealer Installed Coulter Blades)	50C1809		2,350.00

ORDER CODE	CATALOG NUMBER	DESCRIPTION	FACTORY CODE	APPROX. WEIGHT (lb.)	LIST PRICE
Combination Residue Manager (Factory Installed)- Order 1 per Planter					**Optional**
Requires Factory Installed Row Unit Mounted Tillage Coulter (VA13, VA15, VA18 or VA11) Recommend Heavy Duty Down Pressure Springs or Pneumatic Down Pressure					
		6 Row Planters			
26-K102	6400595	Residue Manager Attachment . . . . . 10-inch Steel Wheel with 16 Fingers and Bearing Shields	61C1919	42	2,493.00
26-K103	6400603	Residue Manager Attachment . . . . . 13-inch Steel Wheel with 16 Fingers and Bearing Shields	61C1919	42	2,493.00
26-K104	6400611	Residue Manager Attachment . . . . . 13-inch Steel SharkTooth® Wheel with 12 Teeth	21C2058		2,673.00
		8 Row Planters			
26-K102	6400596	Residue Manager Attachment . . . . . 10-inch Steel Wheel with 16 Fingers and Bearing Shields	48C2559	42	3,324.00
26-K103	6400604	Residue Manager Attachment . . . . . 13-inch Steel Wheel with 16 Fingers and Bearing Shields	48C2559	42	3,324.00
26-K104	6400612	Residue Manager Attachment . . . . . 13-inch Steel SharkTooth® Wheel with 12 Teeth	92C2537		3,296.00

MASSEY FERGUSON®

ORDER CODE	CATALOG NUMBER	DESCRIPTION	FACTORY CODE	APPROX. WEIGHT (lb.)	LIST PRICE

Liquid Fertilizer Attachment (Dealer Installed) — Optional

How To Order Liquid Fertilizer Attachment (Without Openers):

1. Order Liquid Fertilizer Tank and Mounting Brackets
2. Order Fertilizer Pump and Drive Parts
3. Order Pump Plumbing Kit
4. For Piston Pump Only, Order Flow Divider or Outlet Manifold
5. Order Opener Hose
6. Order Fertilizer Openers, if desired.
7. Order Bar Extension Brackets, if necessary.

Liquid Fertilizer Tanks and Mounting Brackets (Dealer Installed) - Order One per Planter

6001182	(2) 150 Gallon Tanks and Float Valves for 6 Row and 8 Row Planters	14C1988	413	2,582.00

Fertilizer Pumps and Drives (Dealer Installed) - Order One per Planter

6001221	Single Piston Pump and Contact Wheel Drive	35C2583		3,355.00

Pump Plumbing Kit (Dealer Installed) - Order One per Planter

Includes Hoses, Fittings, and Quick Fill Coupler and an Additional Quick Fill Coupler for 8 Row

6001274	Squeeze Pump Plumbing for 6 Row Planter	83C368	30	479.00
6001268	Squeeze Pump Plumbing for 8 Row Planter	67C593	35	771.00
6001276	Single Piston Pump Plumbing for 6 Row Planter.	77C616	35	801.00
6001270	Single Piston Pump Plumbing for 8 Row Planter.	33C869	40	1,129.00

Flow Divider or Outlet Manifold Completing Package (Dealer Installed) - Order One per Planter

Required for Piston Pump Only

6100199	12 Row Flow Divider for 6 Row and 8 Row Planters	16C1623		2,108.00
6100194	Outlet Manifold (with Orifices and Check Valves) for 6 Row and 8 Row Planters	88C649		844.00

Liquid Fertilizer Opener Hose (Dealer Installed)

Order One Roll for 6 Row Planters and Two Rolls for 8 Row Planters

6100200	Roll of Fertilizer Opener Hose, 3/8 inch x 48 Feet	46C075		98.00

Fertilizer Openers for Liquid Fertilizer (Dealer Installed) - Order One Per Two Row Units

6000527	Single Disc Fertilizer Opener - Liquid Side Knife.	22C1067		1,386.00

Fertilizer Openers for Granular or Liquid (Dealer Installed) - Order One Per Two Row Units

6100459	Double Disc Opener - 13-1/2 inch Diameter..	05C666	75	865.00

Fertilizer Opener Brackets - Order One per Planter — Optional

6001150	Bracket Set for Single Disc Fertilizer Openers	10C100	28	130.00

Single Disc Fertilizer Opener Brackets (Double Disc Openers do not Require Brackets)

Model	Without Tillage Attachments	Residue Mgr or Trash Master Row Unit Mounted	Tillage Coulters Only Row Unit Mounted	Tillage Coulters & Residue Mgr Combination Row Unit Mounted	Tillage Coulters Only Frame Mounted	Tillage Coulters & Residue Mgr Combination Frame Mounted
Rigid Frame	6001150	6001150	6001150	6001150	6001150	6001150

ORDER CODE	CATALOG NUMBER	DESCRIPTION	FACTORY CODE	APPROX. WEIGHT (lb.)	LIST PRICE

Granular Fertilizer Attachment (Dealer Installed) - Order One Per Planter — Optional

How to Order Granular Fertilizer Attachment:

1. Order Granular Fertilizer Attachment
2. Order Fertilizer Openers, if Desired.
3. Order Bar Extension Brackets, if Necessary.

6001272	Granular Fertilizer Attachment for 6 Row Planter . . . . . (Includes 3 Hoppers, 500 lbs each) Includes Fertilizer Drive	75C2521	369	3,275.00
6001266	Granular Fertilizer Attachment for 8 Row Planter . . . . . (Includes 4 Hoppers, 500 lbs each) Includes Fertilizer Drive	41C3105	481	4,033.00

Fertilizer Openers for Granular Fertilizer - Order One Per Two Row Units — Optional

6000526	Single Disc Fertilizer Opener - Dry Side Knife	77C1078		1,401.00
6000356	Single Disc Fertilizer Opener (50 Wave) . . . . . Dry Trailing Knife with Ripple Blade (Includes One Right and One Left Hand Coulter)	01C1088	186	1,413.00

Fertilizer Openers for Granular or Liquid (Dealer Installed) - Order One Per Two Row Units

6100459	Double Disc Opener - 13-1/2 inch Diameter..	05C666	75	865.00

Fertilizer Opener Brackets - Order One per Planter — Optional

6001150	Bracket Set for Single Disc Fertilizer Openers	10C100	28	130.00

Preservative Coating (Factory Installed) - Order One per Planter — Optional

700963427M	Preservative Coating - Fluid Film . . . . . (Recommended for Protection When Shipped in Winter Months)	32C705		916.00

MASSEY FERGUSON®

ORDER CODE	CATALOG NUMBER	DESCRIPTION	FACTORY CODE	APPROX. WEIGHT (lb.)	LIST PRICE
Monitor System (Dealer Installed) - Order One per Planter					**Required**
20/20 SeedSense (Gen 2) Systems Require GPS to Enable Mapping					
	ACX3550660M	20/20 SeedSense (Gen 2) Monitor Base Kit - Includes Display Base Module, Speed Harness (GPS/Radar), Cab Power Harness, Implement CAN Harness, and 10.1 Inch Display Screen	83C2524		3,279.00
	6000100M	Without Monitor			No Charge
Note: The Harnessing Installed at the Factory is Proprietary to 20/20 SeedSense® Monitor System; Deduct the Monitor Only if a Precision Planting 20/20 Monitor is Available to Operate the Planter.					
Ground Speed Sensor (Dealer Installed) - Order One per Planter					**Required**
	6000923M	Radar Ground Speed and Distance Sensing Gun	48C865	15	1,124.00
	6100064M	Radar "Y" Harness (12 ft Length) (4 Pin Round Tractor Connector to 4 Pin Round Monitor Connector) (Order Qty Required)	51C125		163.00
	6000810M	Without Ground Speed and Distance Sensing (For Use with 6000100)			No Charge
Note: Part # 72515753 - Radar "Y" Harness (4 Pin Flat Tractor Connector to a 4 Pin Round Monitor Connector) (Above Two "Y" Harnesses for Tractors Equipped with Radar Speed Sensing)					
Additional Equipment (Factory Installed) - Order One per Planter					**Optional**
33-BZ01	6400755	Blower Inlet Screen	39C082		107.00
9-A903	6400768	Transmission Shield	56C021		28.00
Row Sensors (Dealer Installed) - Order					**Optional**
	6100287M	Seed Tube with High Rate Sensor	46C152		198.00
Row Unit Gauge Wheels (Dealer Installed) - Order One per Row					**Optional**
Note: Gauge Wheels include Mounting Bolts					
	6002062M	Solid Gauge Wheel, 4-1/2 Inch	99C143		187.00
	6002063M	Spoked Gauge Wheel, 4-1/2 Inch	74C124		162.00
	6002064M	Solid Gauge Wheel, 3-Inch	75C134		175.00
	6002065M	Spoked Gauge Wheel, 3-Inch	27C116		151.00
Row Unit Gauge Wheel Scrapers (Dealer Installed)					**Optional**
	6001688M	Gauge Wheel Mud Scraper, 4-1/2 Inch (Order 1 per 4 Rows)	56C098		128.00

ORDER CODE	CATALOG NUMBER	DESCRIPTION	FACTORY CODE	APPROX. WEIGHT (lb.)	LIST PRICE

NOTE: Only ONE of the Following Tillage Attachments can be used at a time:
Tillage Coulters
12-inch Disc Furrower
Bed Leveler Attachment
Strip-Ridge Till Coulters
Spring Tine Tillage Attachment

Row Unit Mounted Tillage Coulters (Dealer Installed) - Order One Per Row — Optional

Heavy Duty Down Pressure Springs or Pneumatic Down Pressure System Recommended
Recommend Using a Smaller Diameter Blade with DeltaForce to Avoid Contact with DeltaForce Mounting Hardware

6001691M	Coulter Bracket with Bubble Blade (16-inch Diameter)	74C278	41	362.00
6001692M	Coulter Bracket with Ripple Blade (16-inch Diameter)	74C278	41	362.00
6001694M	Coulter Bracket with 13 Flute Blade (16-inch Diameter)	43C276	37	359.00
6001695M	Coulter Bracket with 25 Flute Blade (16-inch Diameter)	43C276	37	359.00

Residue Managers (Dealer Installed) - Order One per Row — Optional

6001655M	Residue Manager Attachment, 13-inch Steel Wheel with 16 Fingers and Bearing Shields (For Use without Tillage Coulters)	32C320	42	416.00
6001656M	Pin Adjust Residue Manager without Depth Band, with SharkTooth® Wheel, 13-inch Steel Wheel with 12 Teeth, Includes Bracket and Hardware (For Use without Tillage Coulters)	73C345		449.00
ACX2832210M	Short Pin Adjust Floating Residue Manager without Wheels (For Use with Yetter Residue Manager Wheels	14C217		282.00

Combination Residue Manager Arm and Wheel (Dealer Installed) — Optional

Order One per Row

6001245M	Pin Adjust Floating Residue Manager Arm with SharkTooth Wheel for No-Till Coulter (For Use with Tillage Coulters)	42C343		446.00

Yetter Residue Manager Wheels (Dealer Installed) - Order One per Row — Optional

For Use with ACX2832210M

ACX2473480M	13-inch SharkTooth Wheels with Depth Band	73C345		449.00
ACX2577210M	13-inch Beveled Wheels with Depth Band	73C345		449.00

Additional Equipment (Dealer Installed) — Optional

6100057M	Ground Drive Transmission Shield (9100) (Recommended for Heavy Trash Conditions)	56C021		28.00

MFVW

VE Wing Fold Planter

F.O.B. Beloit, Kansas

STANDARD EQUIPMENT

Precision Planting Equipped 12 Row Planter Includes:
- 30-inch Row Spacing
- vSet Meters with vDrive (12 volt Electric Drive)
- Single Row Modules (SRM 3 and CAN Extension Hub - One per Row)
- Corn Crop Kits
- 1.9 Bushel, Row Mounted Seed Hoppers
- All Cast Planting Units
- 15.8 x .138 inch (401.3 x 3.5 mm) Double Disc Openers
- Keeton & Furrow Jet "Quick-Attach" Mounting Brackets
- 7" x 7" Forward Folding, Center-Flex-Frame
- All Hydraulic Hoses, Lift and Fold Cylinders
- Frame and Transport Locks
- Hydraulically Driven Vacuum Fan
- Direct Drive Quick Couplers
- Highway Transport Lighting
- Highway Transport Chain
- Transport Wheels with (6) 9.5L-15, 12 Ply Tires
- **Optional** - DeltaForce - Automatic Hydraulic Downforce System with Smart Pins

Required Hydraulics
- Flow 22 GPM (83.28 LPM)
- 3 Tractor Remotes
  Vacuum Fan Drive with Case Drain 7 GPM (26 LPM)
  Frame Lift
  Frame Fold / Markers (Selector Valve Included)
- 4th Tractor Remote
  DeltaForce (Optional) 1/4 GPM per Row (3 GPM Total - 11.4 LPM)

Transport and Frame Specifications

Transport and Frame Specifications						
# Rows	Spacing	Center Frame	Wings	Transport Width	Transport Wheels	Total Wheels
12	30"	188"	80"	196"	4	6

Shipping Dimensions				
Model	Length (mm)	Height (mm)	Width (mm)	Weight (kg)
MFVW12-30	30' 4" (9235)	8' 5" (2561)	8' 2" (2479)	8,040 (3647)

Ordering Instructions:
Planters are now available with many Items Factory Installed.
Factory Installed Items are not Eligible for Return to the Factory

1. Select One Order Code from Base, and One Order Code from Each Group as Required
2. Order Required Seed Discs from Dealer Installed Section
3. Additional Dealer Installed Items can be Ordered for these Models (such as Fertilizer Attachments) from this Chapter and from Dealer Installed Section
4. Accepts Row Unit Mounted Tillage Attachments Only

ORDER CODE	CATALOG NUMBER	DESCRIPTION	FACTORY CODE	APPROX. WEIGHT (lb.)	LIST PRICE
VE WING FOLD PLANTER					
MFVW12-30	ACX3383300	Vacuum Electric Wing Fold, 12 Row 30-inch	13C47485	8040	61,669.00

ORDER CODE	CATALOG NUMBER	DESCRIPTION	FACTORY CODE	APPROX. WEIGHT (lb.)	LIST PRICE
Markers (Factory Installed) - Order One Set per Planter					**Required**
2-P211	6401988	Folding Break-Away Markers with Notched Marker Discs	83C5065		6,579.00
2-P210	6401990	Without Markers			No Charge
Seed Tubes and Sensors (Factory Installed) - Order One per Planter					**Required**
16-P301	ACX3382870	Seed Tubes with High Rate Sensors for vSet2 Meters	33C1870		2,429.00
16-P304	ACX3382880	Wave Vision Seed Sensors for vSet2 Meters	94C2249		2,922.00
Precision Planting Crop Kits (Dealer Installed)					**Required**
Note: Each Seed Hopper/Meter contains a set of Corn Crop Kit vSet2 #6001896M. Order additional as required.					
		Seed Discs - Order <u>One Per Planter Row (Unless Otherwise Noted)</u>			
	6001896M	Crop Kit vSet - Corn	46C075		98.00
	6001897M	Crop Kit vSet - Soybean (80 Hole)	46C075		98.00
	ACX2577100M	Crop Kit vSet - Soybean (56 Hole)	67C054		71.00
	6001898M	Crop Kit vSet - Medium Edible Bean	25C096		125.00
	6001899M	Crop Kit vSet - Large Edible Bean	21C056		73.00
	6001900M	Crop Kit vSet - 2 Seed Hill Drop Cotton	45C065		85.00
	6001901M	Crop Kit vSet - Small Sugar Beet and Onion (Requires Milo Screen Package 6001912M)	67C054		71.00
	6001902M	Crop Kit vSet - 3 Seed Hill Drop Cotton	45C065		85.00
	6001903M	Crop Kit vSet - Large Sugar Beet and Onion (Requires Milo Screen Package 6001912M)	67C054		71.00
	6001904M	Crop Kit vSet - Canola	21C056		73.00
	6001905M	Crop Kit vSet - Specialty Disk (.100 Diameter)	21C056		73.00
	6001906M	Crop Kit vSet - Specialty Disk (.115 Diameter)	21C056		73.00
	6001907M	Crop Kit vSet2 - Specialty Disk (.125 Diameter)	21C056		73.00
	6001908M	Crop Kit vSet - Specialty Disk (.135 Diameter)	21C056		73.00
	6001909M	Crop Kit vSet - Specialty Disk (.145 Diameter)	21C056		73.00
	6001910M	Crop Kit vSet - Specialty Disk (.155 Diameter)	21C056		73.00
	6001911M	Crop Kit vSet - Specialty Ejector (Required for Specialty Disks above)	25C019		25.00
	ACX2577090M	Crop Kit vSet - Sugarbeet Ejector (Required for Specialty Disks above)	25C019		25.00
	6001912M	Crop Kit vSet - Milo Screen Package (Order One per 4 Rows) (For use with CFS Mini Hoppers Only)	82C050		66.00
	6001913M	Crop Kit vSet - Up Restricting Brush (For use with 2- or 3-Seed Hill Drop Cotton)	17C016		21.00
	6001914M	Crop Kit vSet - Large Seed Upper Brush	17C016		21.00
	ACX3182820M	Crop Kit vSet - Canola Screen Package (Order One per 4 Rows)	52C058		76.00
	ACX3182830M	Crop Kit vSet - Canola Wiper Kit	49C028		37.00

MASSEY FERGUSON®

ORDER CODE	CATALOG NUMBER	DESCRIPTION	FACTORY CODE	APPROX. WEIGHT (lb.)	LIST PRICE
Row Unit Gauge Wheels (Factory Installed) - Order One per Planter					**Optional**
41-GW02	ACX2549640	Row Unit Solid Gauge Wheels - 4-1/2 inch (12 Row)	35C1582		2,055.00
41-GW01	ACW7056890	Without Row Unit Gauge Wheels (Gauge Wheel Mounting Hardware is NOT Present with this Selection)			No Charge
Row Unit Gauge Wheel Scapers (Factory Installed) - Order One per Planter					**Optional**
7-PS01	6400902	Row Unit Gauge Wheel Scrapers	28C357		464.00
Closing System (Factory Installed) - Order One per Planter					**Required**
Angled Closing Wheels are Factory Installed in the Staggered Position with the Left Wheel Forward & with Two Spacers under the Wheels					
12-LR11	6400890	Angled Bracket with Rubber Closing Wheels	46C2847	19	3,698.00
12-LR12	6400891	Angled Bracket with Cast Closing Wheels	12C3277	54	4,256.00
12-LR13	6400892	Angled Bracket Without Closing Wheels (Order Dealer Installed Closing Wheels)	76C1607		2,088.00
12-LR10	6400803	Without Closing Wheels and Brackets			No Charge
Row Unit Down Pressure System (Factory Installed) - Order One per Planter					**Required**
Note: ACX3383900 Not Recommended for use with VA11.					
23-KB16	ACX3383900	DeltaForce® Automatic Hydraulic Down Pressure System with Smart Pins, without Alternator	27C9741		12,651.00
23-KB12	6400895	Heavy Duty Down Pressure Springs	92C2075	12	2,696.00
23-KB10	6400027	Without Down Pressure Springs			No Charge
Row Unit Down Pressure System (Dealer Installed) - See Order Quantities Below					**Optional**
Note: ACX3383930M Not Recommended for use with VA11 and Requires ACX2549610M Row Unit DownForce Sensor (Precision Planting)					
	ACX3386930M	DeltaForce® without Sensor (Order ACX2549610M Smart Pins to Complete) (Order 1 per Planter)	74C7824		10,162.00
	6000588M	Heavy Duty Down Pressure Springs (30 - 480 lbs) (Order One per 2 Row Units)	42C343	24	446.00
Additional Equipment (Dealer Installed)					**Optional**
	ACX2549610M	Smart Pin (Downforce Sensor) for use with 20/20 SeedSense Monitor. Recommend minimum Order Qty of 3 Smart Pins (One per Frame Section) (Not for use with KB16)	36C129		168.00

ORDER CODE	CATALOG NUMBER	DESCRIPTION	FACTORY CODE	APPROX. WEIGHT (lb.)	LIST PRICE
Row Unit Mounted Tillage (Factory Installed) - Order One per Planter					**Required**
25-VA10	6400021	Without Unit Mounted Tillage Attachment			No Charge
25-VA16	6400896	Residue Manager - Finger Wheel . . . . . 13-inch Steel Wheel with 16 Fingers (For Use without Tillage Coulters)	99C3839	37	4,987.00
25-VA19	6400897	Residue Manager - SharkTooth® Wheel . . . . . 13-inch Steel Wheel with 12 Teeth (For Use without Tillage Coulters)	22C4147		5,386.00
25-VA20	6400898	Floating Residue Manager - SharkTooth® Wheel . . . . . with Depth Band, 13-inch Steel Wheel with 12 Teeth (For Use without Tillage Coulters)	54C5622		7,302.00
25-VA11	6400541	Tillage Coulter without Blade. . . . . (Order Dealer Installed Coulter Blades)	48C2713		3,524.00
Combination Residue Manager (Factory Installed) - Order 1 per Planter					**Optional**
Requires Factory Installed Row Unit Mounted Tillage Coulter (VA11)					
26-K102	6400597	Residue Manager Attachment . . . . . 10-inch Steel Wheel with 16 Fingers and Bearing Shields	99C3839	42	4,987.00
26-K103	6400605	Residue Manager Attachment . . . . . 13-inch Steel Wheel with 16 Fingers and Bearing Shields	99C3839	42	4,987.00
26-K104	6400613	Residue Manager Attachment . . . . . 13-inch Steel SharkTooth® Wheel with 12 Teeth	42C3808		4,946.00
26-K101	6400589	Residue Manager without Spoke Wheels . . . . . (Order Dealer Installed Coulter Blades)	26C953		1,238.00

MASSEY FERGUSON®

ORDER CODE	CATALOG NUMBER	DESCRIPTION	FACTORY CODE	APPROX. WEIGHT (lb.)	LIST PRICE

Liquid Fertilizer Attachments (Factory Installed) — Required

How To Order Factory Installed Liquid Fertilizer Attachment (Without Openers):
(Flow Divider, Outlet Manifold and Opener Hose are Dealer Installed)

1. Order Liquid Fertilizer Tank and Mounting Brackets (Factory Installed)
2. Order Liquid Fertilizer Plumbing (Flow Divider or Outlet Manifold) (**Dealer Installed**)
3. Order Fertilizer Openers as desired. (Factory Installed)
4. Order Opener Hose (**Dealer Installed**)

Liquid Fertilizer Tanks and Mounting Brackets (Factory Installed) - Order One per Planter

		Tank Only Package			
35-UN10	6400348	Without Liquid Fertilizer Tank Package			No Charge
35-UN02	ACW5255900	(2) 200 Gallon Tanks. (Includes Float Valves, Supports, Top Tank Straps and Hardware)	92C2383	433	3,096.00
		Tank and Plumbing Kit			
35-UN21	ACW5255900	(2) 200 Gallon Tanks. (Includes Float Valves, Supports, Top Tank Straps and Hardware)	92C2383	433	3,096.00
	ACX3494830	Single Piston Pump and Contact Wheel Drive and Lock-up	35C2583	125	3,355.00
	ACW5255910	Plumbing Kit for Piston Pump	37C909		1,181.00

Liquid Fertilizer Plumbing (Dealer Installed) - Order One per Planter — Optional

Flow Divider or Outlet Manifold Completing Package
Required for Piston Pump Only

	6100199M	12 Row Flow Divider	16C1623	2,108.00
	6100195M	12 Row Outlet Manifold (with Orifices and Check Valves)	74C740	962.00

Fertilizer Openers for Liquid Fertilizer (Factory Installed) - Order One per Planter — Optional

(Includes Mtg Brackets for Double Disc Openers and Mounting Brackets and Offset Shanks for Single Disc Openers)

19-K201	6400771	Double Disc Fertilizer Openers	27C5583	7,251.00
19-K202	6400774	Liquid Side Knife Openers	15C7927	10,295.00
19-K203	6400747	Liquid Injector Fertilizer Openers	15C7927	10,295.00
19-K204	6400748	Liquid Trailing Knife Openers with Ripple Blade	15C7927	10,295.00
19-K205	6400749	Liquid Trailing Knife Openers with 25 Flute Blade	15C7927	10,295.00

Note: Single Disc Fertilizer Openers can not be used with Tillage/Coulter Residue Manager Combination

Liquid Fertilizer Opener Hose (Dealer Installed) - Order Four Rolls — Optional

	6100200M	Roll of Fertilizer Opener Hose, 3/8 inch x 48 Ft	46C075	98.00

ORDER CODE	CATALOG NUMBER	DESCRIPTION	FACTORY CODE	APPROX. WEIGHT (lb.)	LIST PRICE

Liquid Fertilizer Attachments (Dealer Installed) Optional

How To Order Dealer Installed Liquid Fertilizer Attachment (Without Openers):

1. Order Liquid Fertilizer Tank and Mounting Brackets (Includes Float Valves, Supports, Top Tank Straps and Hardware)
2. Order Fertilizer Pump and Drive, and Drive Lock-Up Parts
3. Order Pump Plumbing Kit
4. Order Flow Divider or Outlet Manifold
5. Order Opener Hose
6. Order Fertilizer Openers and Brackets / Shanks if Desired

Note: White VE Planters are equipped with non-ISO 20/20 SeedSense (Gen 2) monitors. Variable rate fertilizer application to maps will require an ISO monitor, OR liquid product control by vApply HD, a Precision Planting product controlled by the 20/20 SeedSense System.

Liquid Fertilizer Tanks and Mounting Brackets (Dealer Installed) - Order One per Planter

6002078M	(2) 200 Gallon Fertilizer Tanks	71C2327	433	3,023.00

Fertilizer Pumps and Drives (Dealer Installed) - Order One per Planter — Optional

ACX3512370M	Piston Pump and Contact Wheel Drive	62C2545	125	3,306.00
ACX3512360M	Contact Drive for Piston Pump (Pump not included)	36C1207		1,568.00

Fertilizer Drive Lock-Up (Dealer Installed) - Order One per Planter — Optional

6001340M	Fertilizer Drive Lock-Up	02C097		126.00

For use with ACX3512370M, Piston Pump and Contact Wheel Drive or ACX3512360M, Contact Drive

Pump Plumbing Kit (Dealer Installed)- Order One per Planter — Optional

6001344M	Plumbing Kit for Piston Pump	08C927	50	1,204.00

Plumbing Kits Include: Hoses, Fittings, and Quick Fill Coupler

Flow Divider or Outlet Manifold Completing Package (Dealer Installed) - Order One per Planter

Required for Piston Pumps Only

6100199M	12 Row Flow Divider	16C1623		2,108.00
6100195M	12 Row Outlet Manifold (with Orifices and Check Valves)	74C740		962.00

Liquid Fertilizer Opener Hose (Dealer Installed) - Order Four Rolls — Optional

6100200M	Roll of Fertilizer Opener Hose, 3/8 inch x 48 Ft	46C075		98.00

Fertilizer Openers for Liquid Fertilizer (Dealer Installed) - Order One Per Two Row Units

Note: Single Disc Fertilizer Openers can not be used with Tillage/Coulter Residue Manager Combination

6100459M	Double Disc Opener - 13-1/2 inch Diameter	05C666	75	865.00
6000527M	Single Disc Fertilizer Opener - Liquid Side Knife	22C1067		1,386.00

Fertilizer Opener Brackets (Dealer Installed) — Optional

6001106M	Fertilizer Opener Bracket Set (RH and LH) (Order One per Two Rows)	65C265		345.00
6000609M	Offset Shank Set for Single Disc Fertilizer Openers (Order One per Four Rows)	89C197	101	257.00

MASSEY FERGUSON®

ORDER CODE	CATALOG NUMBER	DESCRIPTION	FACTORY CODE	APPROX. WEIGHT (lb.)	LIST PRICE
Preservative Coating (Factory Installed) - Order One per Planter					**Optional**
	700963427M	Preservative Coating - Fluid Film . . . . . (Recommended for Protection When Shipped in Winter Months)	32C705		916.00
Monitor System (Dealer Installed) - Order One per Planter					**Required**
Requires GPS, 6000923 Radar Ground Speed, and Distance Sensing Gun or 6100064 Radar "Y" Harness. For Use on Tractor with Radar.					
	ACX3550660M	**20/20 SeedSense (Gen 2) Monitor Base Kit** - Includes . Display Base Module, Speed Harness (GPS/Radar), Cab Power Harness, Implement CAN Harness, and 10.1 Inch Display Screen	83C2524		3,279.00
	6000993M	Without Monitor (VE and VER Planters Require a . . . . . 20/20 SeedSense System to Operate. Order Without Monitor if Customer has a 20/20 SeedSense System)			No Charge
ADDITIONAL SEEDSENSE® MONITOR OPTION:					
	ACX2577030M	FieldView Module Kit to Connect to Climate Corporation's . FieldView Service, Sends Data to an iPad (This kit is not needed when pairing with a Gen 2 20/20 Monitor)	70C469		610.00
Ground Speed Sensor (Dealer Installed) - Order One per Planter					**Required**
VE and VER Planters with 20/20 SeedSense , vSet Meter and vDrive Require Both Radar and GPS to Operate Correctly. If Radar is Selected, you must also Select Radar "Y" Harness kits to Connect Radar to the 20/20 in the Tractor Cab.					
	6000923M	Radar Ground Speed and Distance Sensing Gun	48C865	15	1,124.00
	6100064M	Radar "Y" Harness (12 ft Length) . . . . . (4 Pin Round Tractor Connector to 4 Pin Round Monitor Connector) (Order Qty Required)	51C125		163.00
	6000810M	Without Ground Speed and Distance Sensing . . . . . (For Use with 6000100)			No Charge
Note: Part # 72515753 - Radar "Y" Harness (4 Pin Flat Tractor Connector to a 4 Pin Round Monitor Connector) (Above Two "Y" Harnesses for Tractors Equipped with Radar Speed Sensing)					
Lift/Transport Tire Mud Scrapers (Factory Installed) - Order One per Planter					**Optional**
Quantity 4 is Maximum Allowed per Planter for Factory and Dealer Installed Combined					
15-PH01	6400778	Drive Wheel Mud Scrapers . . . . . Drive Wheel (Includes Two)	47C316		411.00
Lift/Transport Tire Mud Scraper (Dealer Installed) - Order One per Wheel					**Optional**
	6001323M	Drive Wheel Mud Scraper . . . . . Drive Wheel (Order Qty Two)	62C158		206.00

See above for the Maximum Quantity of Factory and Dealer Installed Combined

ORDER CODE	CATALOG NUMBER	DESCRIPTION	FACTORY CODE	APPROX. WEIGHT (lb.)	LIST PRICE
Flat Fold Markers with Notched Marker Discs (Dealer Installed) **(Includes Markers and Cylinders - Build to Order)**					**Optional**
	6002077M	Tri-Fold Markers with Notched Marker Discs	11C5115		6,643.00
Hoppers and Meters (Dealer Installed) - Order One per Row					**Optional**
	ACX3512220M	1.9 Bushel Hopper and vSet® 2 Meter, vDrive, and Corn Crop Kit	51C664		863.00
	ACX3512230M	1.9 Bushel Hopper and vSet 2 Meter, vDrive, Corn Crop Kit, and Mounting Brackets for VE Row Unit	73C730		949.00
	ACX2577080M	CFS Mini-Hopper Meter and Assembly	51C664		863.00
Seed Hopper (Dealer Installed) - Order One per Row					**Optional**
	ACX3511700M	Mini-Hopper and Meter for Precision Planting	51C664		863.00
Seed Tubes and Sensors (Dealer Installed) - Order One per Row **Must be ordered separately from Serialized Planter using the Field Installed Option Tab in eOrdering**					**Optional**
	ACX3512280M	Bullseye Tube and High Rate Sensor	46C152		198.00
	ACX3512290M	Wave Vision Seed Sensors for vSet Meters	88C187		244.00
Closing System (Dealer Installed) - Order One per Row					**Optional**
	ACX3100690M	Angled Bracket with Rubber Closing Wheels	16C237	19	308.00
	ACX3100700M	Angled Bracket with Cast Closing Wheels	12C274	54	356.00
	ACX3100710M	Angled Bracket without Closing Wheels (Order Dealer Installed Closing Wheels)	98C133		174.00
Closing Wheels (Dealer Installed) - Order One per Row					**Optional**
	6100103M	Angled Rubber Closing Wheels (Pair), without Bracket (Requires Planter be Equipped with LR13, Angled Bracket without Closing Wheel)	48C095	19	124.00
	6100101M	Angled Cast Closing Wheels (Pair), without Bracket (Requires Planter be Equipped with Angled Rubber Closing Wheels or LR13, Angled Bracket without Closing Wheel)	07C147	46	191.00
Row Unit Gauge Wheel Scrapers (Dealer Installed)					**Optional**
	6001688M	Gauge Wheel Mud Scraper, 4-1/2 Inch (Order 1 per 4 Rows)	56C098		128.00

MASSEY FERGUSON®

ORDER CODE	CATALOG NUMBER	DESCRIPTION	FACTORY CODE	APPROX. WEIGHT (lb.)	LIST PRICE

NOTE: Only ONE of the Following Tillage Attachments can be used at a time:
Tillage Coulters
12-inch Disc Furrower
Bed Leveler Attachment
Strip-Ridge Till Coulters
Spring Tine Tillage Attachment

Row Unit Mounted Tillage Coulters (Dealer Installed) - Order One per Row — Optional

Recommend Using a Smaller Diameter Blade with DeltaForce to Avoid Contact with DeltaForce Mounting Hardware

6001691M	Coulter Bracket with Bubble Blade (16-inch Diameter)	74C278	41	362.00
6001692M	Coulter Bracket with Ripple Blade (16-inch Diameter)	74C278	41	362.00
6001694M	Coulter Bracket with 13 Flute Blade (16-inch Diameter)	43C276	37	359.00
6001695M	Coulter Bracket with 25 Flute Blade (16-inch Diameter)	43C276		359.00

Residue Managers (Dealer Installed) - Order One per Row — Optional

6001655M	Residue Manager Attachment, 13-inch Steel Wheel with 16 Fingers and Bearing Shields (For Use without Tillage Coulters)	32C320	42	416.00
6001656M	Pin Adjust Residue Manager without Depth Band, with SharkTooth® Wheel, 13-inch Steel Wheel with 12 Teeth, Includes Bracket and Hardware (For Use without Tillage Coulters)	73C345		449.00
ACX2832210M	Short Pin Adjust Floating Residue Manager without Wheels (For Use with Yetter Residue Manager Wheels)	14C217		282.00

Combination Residue Manager Arm and Wheel (Dealer Installed) — Optional

Order One per Row

6001245M	Pin Adjust Floating Residue Manager Arm with SharkTooth Wheel for No-Till Coulter (For Use with Tillage Coulters)	42C343		446.00

Yetter Residue Manager Wheels (Dealer Installed) - Order One per Row — Optional

For Use with ACX2832210M

ACX2473480M	13-inch SharkTooth Wheels with Depth Band	73C345		449.00
ACX2577210M	13-inch Beveled Wheels with Depth Band	73C345		449.00

Display Carts (Dealer Installed) — Optional

ACX3469930M	Display Cart with Precision Planter Meter Kit, Mini-Hopper with Bullseye Tube	30C3072		3,990.00
ACX3470090M	Display Cart with Precision Planter Meter Kit, Mini-Hopper with SpeedTube	45C3453		4,485.00

RESERVED

VE Front Fold Planters

F.O.B. Beloit, Kansas

STANDARD EQUIPMENT

Precision Planting Equipped 12 Row Planter Includes:

- 30-inch Row Spacing
- vSet Meters with vDrive (12 volt Electric Drive)
- Single Row Modules (SRM 3 and CAN Extension Hub - One per Row)
- Corn Crop Kits
- Mini Hoppers and vSet Meters for use with CFS
- 15.8 X .138 inch (401.3 x 3.5 mm) Double Disc Openers
- 7" x 7" Forward Folding, Center-Line Flex-Frame
- Keeton & Furrow Jet "Quick-Attach" Mounting Brackets
- All Hydraulic Hoses, Lift and Fold Cylinders
- Frame and Transport Locks
- Hydraulically Driven Vacuum Fan
- Direct Drive Quick Couplers
- Highway Transport Lighting
- Highway Transport Chain (Drawbar Hitch)
- Transport Wheels with (6) 9.5L-15, 12 Ply Tires
- **Optional** - DeltaForce - Automatic Hydraulic Downforce System with Smart Pins

Transport and Carrying Wheels / Tires

MFVF12-30 - (6) 10:00-15 (TL) Load Range D
MFVF16-30 - (8) 295/75R22.5, 16 Ply
MFVF24-30 - (10) 295/75R22.5, 16 Ply

Optional Factory/Dealer Installed Equipment Also Available

Note: Central Fill System (CFS) Planters are Primarily Equipped to Plant Corn and Soybeans with the Appropriate Sized Air Discharge Screen Installed in the Mini-Hopper of each Meter Assembly. Screens Designed for Smaller Seeds such as Milo can be Ordered Separately (Precision Planting Part #720253 D-Tube Screen, Milo. Order One per 4 Rows.)

Required Hydraulic Remotes For 12 Row Central Fill System

- 3 Tractor Remotes with Low Presure Return and Case Drain Return if Using 40 GPM PTO Pump and Reservoir
- 3 Tractor Remotes with Low Presure Return Plus Power Beyond if Using Tractor Hydraulics
- 4 Tractor Remotes with Low Presure Return and Case Drain Return if Using 40 GPM PTO Pump, Reservoir, and DeltaForce Down Pressure Option
- 4 Tractor Remotes with Low Presure Return Plus Power Beyond with DeltaForce Down Pressure

Required Hydraulic Remotes For 16 and 24 Row Central Fill System

- 3 Tractor Remotes with Case Drain Return if Using 14 GPM PTO Pump and Reservoir
- 4 Tractor Remotes with Low Presure Return and Case Drain Return If Using Tractor Hydraulics
- 4 Tractor Remotes with Case Drain Return if Using PTO Pump, Reservoir, and DeltaForce Down Pressure
- 5 Tractor Remotes with Case Drain Return if Using PTO Pump, DeltaForce Down Pressure, and Centrifugal Fertilizer Pump
- 6 Tractor Remotes with Low Presure Return and Case Drain Return if Using Tractor Hydraulics, DeltaForce Down Pressure, and Centrifugal Fertilizer Pump

Transport and Frame Specifications

Rows	Spacing	Center Frame	Wings	Transport Height w/CFS	Transport Width	Tongue Weight Loaded	Transport Wheels	Total Wheels
12	30"	10'	10'	11' 10"	12'	9,970 lbs	4	6
16	30"	14'	14'	12' 8"	12'	9,970 lbs	4	8
24	30"	24'	24'	12' 8"	12'	10,700 lbs	4	10

Shipping Dimensions				
Model	Length (mm)	Height (mm)	Width (mm)	Weight (kg)
MFVF12-30 2-Point	31' 10" (9703)	10' 0" (3048)	12' 0" (3658)	14,060 (6369)
MFVF16-30 2-Point	33' 4" (10465)	11' 10" (3607)	11' 8" (3556)	18,000 (8164)
MFVF16-30 Drawbar	36' 0" (10973)	11' 10" (3607)	11' 8" (3556)	18,000 (8164)
MFVF24-30 2-Point	45' 2" (13755)	11' 10" (3607)	11' 8" (3556)	26,000 (11793)
MFVF24-30 Drawbar	46' 10" (14275)	11' 10" (3607)	11' 8" (3556)	26,000 (11793)

ORDER CODE	CATALOG NUMBER	DESCRIPTION	FACTORY CODE	APPROX. WEIGHT (lb.)	LIST PRICE

Ordering Instructions:
Planters are Now Available with many Items Factory Installed. Factory Installed items are not Eligible for Return to the Factory

1. Order Required Seed Discs Available
2. Select One Order Code from Base, and One Order Code from Each Group as Required
3. Additional Dealer Installed Items can be Ordered for these Models from this Chapter and from Dealer Installed Section
4. Accepts Row Unit Mounted Tillage Attachments Only

Narrow Transport Folding Planters

MFVF12-30	ACX3383260	Vacuum Electric Front Fold, 12 Row 30-inch	52C69589	14060	90,376.00
MFVF16-30	ACX3383270	Vacuum Electric Front Fold, 16 Row 30-inch	19C89202	18000	115,847.00
MFVF24-30	ACX3383280	Vacuum Electric Front Fold, 24 Row 30-inch	25C142777	26000	185,425.00

Hitch and Markers (Factory Installed) - Order One per Planter — Required

		12 Row Planters			
2-P220	ACX3472180	Two Point Hitch and Bi-Fold Break-Away Markers with Notched Marker Discs	03C5882		7,639.00
2-P202	ACX3472170	Two Point Hitch Without Markers			No Charge
		16 Row Planters			
2-P214	ACX3472220	Two Point Hitch and Tri-Fold Break-Away Markers with Notched Marker Discs	27C9818	1544	12,751.00
2-P202	ACX3472210	Two Point Hitch Without Markers			No Charge
2-P215	ACX3472240	CAT IV Drawbar Hitch and Tri-Fold Break-Away Markers with Notched Marker Discs	14C12845	2950	16,682.00
2-P217	ACX3472230	CAT IV Drawbar Hitch Without Markers	95C4184		5,435.00
		24 Row Planters			
2-P204	ACX3472290	Two Point Hitch and Tri-Fold Break-Away Markers with Notched Marker Discs	73C11587	1544	15,049.00
2-P203	ACX3472280	Two Point Hitch Without Markers			No Charge
2-P216	ACX3472310	CAT IV Drawbar Hitch and Tri Fold Break-Away Markers with Notched Marker Discs	14C14616	2950	18,982.00
2-P218	ACX3472300	CAT IV Drawbar Hitch Without Markers	18C4800		6,234.00

Note: If Markers are not Selected, Wing Weight Brackets and Weights are Recommended

Weight Brackets (Dealer Installed) - Order One per Planter — Optional

		12 Row Planters			
	6002321M	Marker Weight Bracket (Set of 2) Mounts Weights to Marker	14C140	53	182.00
		16 Row Planters			
	6001493M	Weight Bracket (Set of 2) To Add Weights for Without Markers Option	91C371	21	483.00
		24 Row Planters			
	6001940M	Weight Bracket (Set of 2) To Add Weights for Without Markers Option	91C371	21	483.00

MASSEY FERGUSON®

ORDER CODE	CATALOG NUMBER	DESCRIPTION	FACTORY CODE	APPROX. WEIGHT (lb.)	LIST PRICE
Weights (Dealer Installed) - Order One per Planter					**Optional**
	6001451M	Suitcase Weights (Set of 8 Weights). . . . . 125 lbs (55 kg) Each For use with Weight Brackets Above	51C1280	1000	1,663.00
Central Fill System (Factory Installed) - Order One per Planter					**Required**
Includes Seed Meters and Mini-Hoppers					
Note: CF11 - 90 Bushel CFS for 12 Row Allows the use of 300 Gallon Fertilizer Tank Package CF12 - 90 Bushel H.D. CFS Frame for 16 and 24 Rows Allows the use of 500 Gallon Fertilizer Tank Package CF10 - With 1.9 Bushel Hoppers, Allows the use of 750 Gallon Fertilizer Tank Package					
		12 Row Planters			
18-CF11	ACX3450110	90 Bushel Central Fill System	61C20784		26,993.00
18-CF10	6401903	No Central Fill System (Order Seed Hopper on Next Page) .			No Charge
		16 Row Planters			
18-CF12	ACX3450140	90 Bushel Heavy Duty Frame Central Fill System . . . . . accepts 500 Gallon Liquid Tank Cradle	82C22457		29,166.00
18-CF10	6400174	No Central Fill System (Order Seed Hopper on Next Page) .			No Charge
		24 Row Planters			
18-CF12	ACX3450170	90 Bushel Heavy Duty Frame Central Fill System . . . . . accepts 500 Gallon Liquid Tank Cradle	92C24405		31,696.00
18-CF10	6400174	No Central Fill System (Order Seed Hopper on Next Page) .			No Charge
Hydraulic Supply System (Factory Installed) - Order One per Planter					**Required**
		12 Row With Electric Drive			
21-P801	6401885	40 GPM PTO Pump with 25 Gallon Reservoir . . . . . and 1-3/8 inch PTO Spline Shaft, **For Use With CFS** (Does not Require PTO Pump Adaptor)	92C3692		4,796.00
21-P802	6401880	Tractor Hydraulics (Direct Drive and Hoses). . . . . **For Use Without CFS**	37C216	30	281.00
21-P812	6401880	Tractor Hydraulics (Direct Drive and Hoses). . . . . **For Use With CFS**	37C216	30	281.00
		16 Row and 24 Row With Electric Drive			
21-P801	6401881	14 GPM PTO Pump with 8.5 Gallon Reservoir . . . . . (2-Point Hitch)	13C1747		2,269.00
21-P807	6401869	14 GPM PTO Pump with 8.5 Gallon Reservoir . . . . . (Drawbar Hitch)	13C1747	100	2,269.00
21-P802	6401659	Tractor Hydraulics (Direct Drive and Hoses).	37C216	30	281.00
PTO Pump Adapter (Dealer Installed) - Order One per Planter					**Required**
		12 Row, 16 Row and 24 Row			
	6000777M	Without PTO Pump Adapter . . . . . (For Use with 6401885, 6401880 and 6401659) (with PTO Pump - 12 Row Only)			No Charge
		16 Row and 24 Row			
	6000747M	1000 RPM PTO Pump Adapter for 1-3/4 in Shaft . . . . . (For Use with 6401881 and 6401869)	60C138		180.00
	6000748M	1000 RPM PTO Pump Adapter for 1-3/8 in Shaft . . . . . (For Use with 6401881 or 6401869)	60C138		180.00

ORDER CODE	CATALOG NUMBER	DESCRIPTION	FACTORY CODE	APPROX. WEIGHT (lb.)	LIST PRICE
Seed Hoppers and Meters (Factory Installed) - Order One per Planter					**Required**
		12 Row - Set of 12 *with 12 Corn Crop Kits vSet2 Included (6001896M)*			
5-HO14	ACX3451570	Mini Hoppers and vSet Meters for use with CFS			In Base
5-HO18	ACX3451580	Mini Hoppers and vSet Meters for use with SpeedTubes® and CFS (Requires P307 SpeedTubes® below)			No Charge
5-HO17	ACX3449160	Precision Planting 1.9 Bu Hoppers and vSet Meters for use without CFS	64C1564		2,032.00
		16 Row - Set of 16 *with 16 Corn Crop Kits vSet2 Included (6001896M)*			
5-HO14	ACX3453290	Mini Hoppers and vSet Meters for use with CFS			In Base
5-HO18	ACX3453300	Mini Hoppers and vSet Meters for use with SpeedTubes® and CFS (Requires P307 SpeedTubes® below)			No Charge
5-HO17	ACX3453240	Precision Planting 1.9 Bu Hoppers and vSet Meters for use without CFS	93C2085		2,709.00
		24 Row - Set of 24 *with 24 Corn Crop Kits vSet2 Included (6001896M)*			
5-HO14	ACX3455110	Mini Hoppers and vSet Meters for use with CFS			In Base
5-HO18	ACX3455120	Mini Hoppers and vSet Meters for use with SpeedTubes® and CFS (Requires P307 SpeedTubes® below)			No Charge
5-HO17	ACX3455100	Precision Planting 1.9 Bu Hoppers and vSet Meters for use without CFS	05C3130		4,065.00
Seed Tubes and Sensors (Factory Installed) - Order One per Planter					**Required**
		12 Row Planters			
16-P301	ACX3382760	Bullseye Seed Tubes with High Rate Sensors	33C1870		2,429.00
16-P304	ACX3382790	Seed Tubes with Wave Vision Seed Sensors	94C2249		2,922.00
16-P307	ACX3382820	SpeedTubes® (Requires HO18 Hoppers and Meters above and KB15 DeltaForce®)	85C14171		18,405.00
		16 Row Planters			
16-P301	ACX3382770	Bullseye Seed Tubes with High Rate Sensors	03C2494		3,239.00
16-P304	ACX3382800	Seed Tubes with Wave Vision Seed Sensors	92C2999		3,896.00
16-P307	ACX3382830	SpeedTubes® (Requires HO18 Hoppers and Meters above and KB15 DeltaForce®)	35C18445		23,955.00
		24 Row Planters			
16-P301	ACX3382780	Bullseye Seed Tubes with High Rate Sensors	43C3741		4,859.00
16-P304	ACX3382810	Seed Tubes with Wave Vision Seed Sensors	88C4499		5,844.00
16-P307	ACX3382840	SpeedTubes® (Requires HO18 Hoppers and Meters above and KB15 DeltaForce®)	41C27668		35,933.00

Hoppers / Meters	Seed Tubes with High Rate Sensors	Seed Tubes with Wave Vision Seed Sensors	SpeedTubes®
Mini Hoppers and vSet Meters	Yes	Yes	
Mini Hoppers and vSet Meters for use with SpeedTubes®			Yes
Precision Planting 1.9 Bu Hoppers and vSet Meters	Yes	Yes	

MASSEY FERGUSON®

ORDER CODE	CATALOG NUMBER	DESCRIPTION	FACTORY CODE	APPROX. WEIGHT (lb.)	LIST PRICE
Precision Planting Crop Kits (Dealer Installed)					**Required**
Note: Each Seed Hopper/Meter contains a set of Corn Crop Kit vSet2 #6001896. Order additional as required.					
		Seed Discs - Order <u>One Per Planter Row (Unless Otherwise Noted)</u>			
	6001896M	Crop Kit vSet - Corn	46C075		98.00
	6001897M	Crop Kit vSet - Soybean (80 Hole)	46C075		98.00
	ACX2577100M	Crop Kit vSet - Soybean (56 Hole)	67C054		71.00
	6001898M	Crop Kit vSet - Medium Edible Bean	25C096		125.00
	6001899M	Crop Kit vSet - Large Edible Bean	21C056		73.00
	6001900M	Crop Kit vSet - 2 Seed Hill Drop Cotton	45C065		85.00
	6001901M	Crop Kit vSet - Small Sugar Beet and Onion (Requires Milo Screen Package 6001912M)	67C054		71.00
	6001902M	Crop Kit vSet - 3 Seed Hill Drop Cotton	45C065		85.00
	6001903M	Crop Kit vSet - Large Sugar Beet and Onion (Requires Milo Screen Package 6001912M)	67C054		71.00
	6001904M	Crop Kit vSet - Canola	21C056		73.00
	6001905M	Crop Kit vSet - Specialty Disk (.100 Diameter)	21C056		73.00
	6001906M	Crop Kit vSet - Specialty Disk (.115 Diameter)	21C056		73.00
	6001907M	Crop Kit vSet2 - Specialty Disk (.125 Diameter)	21C056		73.00
	6001908M	Crop Kit vSet - Specialty Disk (.135 Diameter)	21C056		73.00
	6001909M	Crop Kit vSet - Specialty Disk (.145 Diameter)	21C056		73.00
	6001910M	Crop Kit vSet - Specialty Disk (.155 Diameter)	21C056		73.00
	6001911M	Crop Kit vSet - Specialty Ejector (Required for Specialty Disks above)	25C019		25.00
	ACX2577090M	Crop Kit vSet - Sugarbeet Ejector (Required for Specialty Disks above)	25C019		25.00
	6001912M	Crop Kit vSet - Milo Screen Package (Order One per 4 Rows) (For use with CFS Mini Hoppers Only)	82C050		66.00
	6001913M	Crop Kit vSet - Up Restricting Brush (For use with 2- or 3-Seed Hill Drop Cotton)	17C016		21.00
	6001914M	Crop Kit vSet - Large Seed Upper Brush	17C016		21.00
	ACX3182820M	Crop Kit vSet - Canola Screen Package (Order One per 4 Rows)	52C058		76.00
	ACX3182830M	Crop Kit vSet - Canola Wiper Kit	49C028		37.00

ORDER CODE	CATALOG NUMBER	DESCRIPTION	FACTORY CODE	APPROX. WEIGHT (lb.)	LIST PRICE
Row Unit Gauge Wheels (Factory Installed) - Order One per Planter					**Optional**
41-GW02	ACX2549500	Row Unit Solid Gauge Wheels - 4-1/2 inch (12 Row)	35C1582		2,055.00
41-GW02	ACX2549510	Row Unit Solid Gauge Wheels - 4-1/2 inch (16 Row)	80C2109		2,740.00
41-GW02	ACX2549520	Row Unit Solid Gauge Wheels - 4-1/2 inch (24 Row)	70C3164		4,110.00
41-GW01	ACW7056890	Without Row Unit Gauge Wheels (Gauge Wheel Mounting Hardware is NOT Present with this Selection)			No Charge
Row Unit Gauge Wheel Scrapers (Factory Installed)- Order One per Planter					**Optional**
		12 Row Planters			
7-PS01	6400902	Row Unit Gauge Wheel Scrapers	28C357		464.00
		16 Row Planters			
7-PS01	6400816	Row Unit Gauge Wheel Scrapers	86C475		618.00
		24 Row Planters			
7-PS01	6400851	Row Unit Gauge Wheel Scrapers	79C713		927.00
Closing System (Factory Installed) - Order One per Planter					**Required**
Angled Closing Wheels are Factory Installed in the Staggered Position with the Left Wheel Forward & with Two Spacers under the Wheels					
		12 Row Planters			
12-LR11	6400890	Angled Bracket with Rubber Closing Wheels	46C2847	19	3,698.00
12-LR12	6400891	Angled Bracket with Cast Closing Wheels	12C3277	54	4,256.00
12-LR13	6400892	Angled Bracket Without Closing Wheels (Order Dealer Installed Closing Wheels)	76C1607		2,088.00
12-LR10	6400803	Without Closing Wheels and Brackets			No Charge
		16 Row Planters			
12-LR11	6400804	Angled Bracket with Rubber Closing Wheels	33C3795	19	4,929.00
12-LR12	6400807	Angled Bracket with Cast Closing Wheels	75C4369	54	5,675.00
12-LR13	6400806	Angled Bracket Without Closing Wheels (Order Dealer Installed Closing Wheels)	14C2142		2,782.00
12-LR10	6400803	Without Closing Wheels and Brackets			No Charge
		24 Row Planters			
12-LR11	6400838	Angled Bracket with Rubber Closing Wheels	38C5693	19	7,394.00
12-LR12	6400839	Angled Bracket with Cast Closing Wheels	78C6555	54	8,514.00
12-LR13	6400840	Angled Bracket Without Closing Wheels (Order Dealer Installed Closing Wheels)	21C3213		4,173.00
12-LR10	6400803	Without Closing Wheels and Brackets			No Charge

MASSEY FERGUSON®

ORDER CODE	CATALOG NUMBER	DESCRIPTION	FACTORY CODE	APPROX. WEIGHT (lb.)	LIST PRICE
Row Unit Down Pressure System (Factory Installed) - Order One per Planter					**Required**
		12 Row Planters			
23-KB16	ACX3451600	DeltaForce® Automatic Hydraulic Down Pressure System with Smart Pins, without Alternator	27C9741		12,651.00
23-KB15	ACX3451590	DeltaForce® Automatic Hydraulic Down Pressure System with Smart Pins, Alternator Included	76C11232		14,588.00
23-KB12	6400895	Heavy Duty Down Pressure Springs	92C2075		2,696.00
23-KB10	6400027	Without Down Pressure Springs			No Charge
		16 Row Planters			
23-KB16	ACX3453360	DeltaForce® Automatic Hydraulic Down Pressure System with Smart Pins, without Alternator	01C12638		16,413.00
23-KB15	ACX3453350	DeltaForce® Automatic Hydraulic Down Pressure System with Smart Pins, Alternator Included	73C14128		18,349.00
23-KB12	6400811	Heavy Duty Down Pressure Springs	61C2766	12	3,593.00
23-KB10	6400027	Without Down Pressure Springs			No Charge
		24 Row Planters			
23-KB15	ACX3455080	DeltaForce® Automatic Hydraulic Down Pressure System with Smart Pins, Alternator Included	67C19920		25,871.00
23-KB12	6400843	Heavy Duty Down Pressure Springs	84C4151	12	5,392.00
23-KB10	6400027	Without Down Pressure Springs			No Charge

Model	# Rows	vDrive Amps	DeltaForce® Amps	SpeedTube® Amps	vDrive and DeltaForce ®	vDrive, DeltaForce®, SpeedTube®
MFVF12-30	12	15	12	27	27	**54
MFVF16-30	16	20	16	36	36	**72
MFVF24-30	24	30	24	**54	**54	**108
****Alternator Required**						

Downforce Sensor (Factory Installed) - Order One per Planter — Optional

For use Without DeltaForce

Used with 20/20 SeedSense (Gen 2) Monitor to Display Mechanical Spring Generated Row Unit Down Force

40-SD01	ACX3383140	Smart Pins (12) Downforce Sensor, 12 Row	88C1573		2,044.00
40-SD01	ACX3383150	Smart Pins (16) Downforce Sensor, 16 Row	02C2099		2,726.00
40-SD01	ACX3383160	Smart Pins (24) Downforce Sensor, 24 Row	53C3148		4,089.00

Row Unit Down Pressure System (Dealer Installed) - Order One per Planter — Optional

Note: Not Recommended for use with VA11
Requires Factory Installed Downforce Sensor or ACX2549610M Row Unit Downforce Sensor (Precision Planting)

	ACX3455090M	DeltaForce Without Sensor (Precision Planting - 12 Row)	74C7824		10,162.00
	ACX3453420M	DeltaForce Without Sensor (Precision Planting - 16 Row)	15C10083		13,095.00
	ACX3453460M	DeltaForce Without Sensor (Precision Planting - 24 Row)	61C16087		20,893.00

Additional Equipment (Dealer Installed) — Optional

	ACX2549610M	Smart Pin (Downforce Sensor) for use with 20/20 SeedSense Monitor. Recommend minimum Order Qty of 3 Smart Pins (One per Frame Section) (Not for use with KB16)	36C129		168.00
	6000588M	Heavy Duty Down Pressure Springs (30 - 480 lbs) Order One per 2 Row Units	42C343	24	446.00

ORDER CODE	CATALOG NUMBER	DESCRIPTION	FACTORY CODE	APPROX. WEIGHT (lb.)	LIST PRICE
Row Unit Mounted Tillage (Factory Installed) - Order One per Planter					**Required**
Heavy Duty Down Pressure Springs Recommended; Row Unit Coulters not Recommended for use with DeltaForce®					
		12 Row Planters			
25-VA10	6400021	Without Unit Mounted Tillage Attachment			No Charge
25-VA16	6400896	Residue Manager - Finger Wheel . . . . . 13-inch Steel Wheel with 16 Fingers (For use Without Tillage Coulters)	99C3839		4,987.00
25-VA19	6400897	Residue Manager - SharkTooth® Wheel . . . . . 13-inch Steel Wheel with 12 Teeth (For Use Without Tillage Coulters)	22C4147		5,386.00
25-VA20	6400898	Floating Residue Manager - SharkTooth® Wheel . . . . . with Depth Band, 13-inch Steel Wheel with 12 Teeth (For Use Without Tillage Coulters)	54C5622		7,302.00
25-VA30	ACX2832180	Short Pin Adjust Floating Residue Manger without . . . . . Wheels (For Use with Yetter Dealer Installed Wheels)	91C2604		3,383.00
25-VA11	6400541	Tillage Coulter without Blade. . . . . (Order Dealer Installed Coulter Blades)	48C2713		3,524.00
		16 Row Planters			
25-VA10	6400021	Without Unit Mounted Tillage Attachment			No Charge
25-VA16	6400424	Residue Manager - Finger Wheel . . . . . 13-inch Steel Wheel with 16 Fingers (For Use Without Tillage Coulters)	73C5119	37	6,649.00
25-VA19	6400439	Residue Manager - SharkTooth® Wheel . . . . . 13-inch Steel Wheel with 12 Teeth (For Use Without Tillage Coulters)	14C5530		7,182.00
25-VA20	6400809	Floating Residue Manager - SharkTooth® Wheel . . . . . with Depth Band, 13-inch Steel Wheel with 12 Teeth (For Use Without Tillage Coulters)	95C7495		9,735.00
25-VA30	ACX2832500	Short Pin Adjust Floating Residue Manger without . . . . . Wheels (For Use with Yetter Dealer Installed Wheels)	70C3472		4,510.00
25-VA11	6400542	Tillage Coulter without Blade. . . . . (Order Dealer Installed Coulter Blades)	46C3617		4,698.00
		24 Row Planters			
25-VA10	6400021	Without Unit Mounted Tillage Attachment			No Charge
25-VA16	6400845	Residue Manager - Finger Wheel . . . . . 13-inch Steel Wheel with 16 Fingers (For use Without Tillage Coulters)	98C7679	37	9,974.00
25-VA19	6400846	Residue Manager - SharkTooth® Wheel . . . . . 13-inch Steel Wheel with 12 Teeth (For Use Without Tillage Coulters)	98C8295		10,774.00
25-VA20	6400847	Floating Residue Manager - SharkTooth® Wheel . . . . . with Depth Band, 13-inch Steel Wheel with 12 Teeth (For Use Without Tillage Coulters)	08C11245		14,604.00
25-VA30	ACX2832510	Short Pin Adjust Floating Residue Manger without . . . . . Wheels (For Use with Yetter Dealer Installed Wheels)	05C5209		6,765.00
25-VA11	6400544	Tillage Coulter without Blade. . . . . (Order Dealer Installed Coulter Blades)	96C5426		7,048.00

MASSEY FERGUSON®

ORDER CODE	CATALOG NUMBER	DESCRIPTION	FACTORY CODE	APPROX. WEIGHT (lb.)	LIST PRICE
Combination Residue Manager (Factory Installed)- Order 1 per Planter					**Optional**
Requires Factory Installed Row Unit Mounted Tillage Coulter (VA11) Heavy Duty Down Pressure Springs Recommended; Row Unit Coulters not Recommended for use with DeltaForce®					
		12 Row Planters			
26-K102	6400597	Residue Manager Attachment 10-inch Steel Wheel with 16 Fingers and Bearing Shields	99C3839		4,987.00
26-K103	6400605	Residue Manager Attachment 13-inch Steel Wheel with 16 Fingers and Bearing Shields	99C3839		4,987.00
26-K104	6400613	Residue Manager Attachment 13-inch Steel SharkTooth® Wheel with 12 Teeth	42C3808		4,946.00
		16 Row Planters			
26-K102	6400598	Residue Manager Attachment 10-inch Steel Wheel with 16 Fingers and Bearing Shields	73C5119		6,649.00
26-K103	6400606	Residue Manager Attachment 13-inch Steel Wheel with 16 Fingers and Bearing Shields	73C5119		6,649.00
26-K104	6400614	Residue Manager Attachment 13-inch Steel SharkTooth® Wheel with 12 Teeth	38C5077		6,594.00
		24 Row Planters			
26-K102	6400600	Residue Manager Attachment 10-inch Steel Wheel with 16 Fingers and Bearing Shields	98C7679		9,974.00
26-K103	6400608	Residue Manager Attachment 13-inch Steel Wheel with 16 Fingers and Bearing Shields	98C7679		9,974.00
26-K104	6400616	Residue Manager Attachment 13-inch Steel SharkTooth® Wheel with 12 Teeth	30C7615		9,890.00

ORDER CODE	CATALOG NUMBER	DESCRIPTION	FACTORY CODE	APPROX. WEIGHT (lb.)	LIST PRICE

Liquid Fertilizer Attachment (Factory Installed) — Required

Order Instructions

1. Order 1 Liquid Fertilizer Package (Tanks Include Mounting Brackets)
2. Order Rear Tow Hitch
3. Order Fertilizer Openers as Desired.
4. Order Opener Hose (**Dealer Installed**)

Note: White VE Planters are equipped with non-ISO 20/20 SeedSense (Gen 2) monitors. Variable rate fertilizer application to maps will require an ISO monitor, OR liquid product control by vApply HD, a Precision Planting product controlled by the 20/20 SeedSense System.

Note: CF11 - 90 Bushel CFS for 12 Row Allows the use of 300 Gallon Fertilizer Tank Package
CF11 - 90 Bushel CFS for 16 and 24 Row - No Fertilizer Tank Package Allowed
CF12 - 90 Bushel CFS for 16 and 24 Row Allows the use of 500 Gallon Fertilizer Tank Package
CF10 - With 1.9 Bushel Hoppers, Allows the use of 750 Gallon Fertilizer Tank Package

Determining Customer's Target Application Rate in Gallons per Aces (GPA)

MFVF16-30 (6 mph Maximum Speed)					
Target Application Rates	Below 9 GPA with Automatic Rate Control	9 to 13 GPA with Automatic Rate Control	13 to 20 GPA with Automatic Rate Control	5 to 13 GPA with Manual Rate Control	13 to 20 GPA with Manual Rate Control
Pump and Drive	Electric Pump and Variable Rate Drive	Centrifugal Pump and Variable Rate Drive	Centrifugal Pump and Variable Rate Drive	Single Piston Pump and Contact Wheel Drive	Single Piston Pump and Contact Wheel Drive
Flow Meter	Flow Meter from Parts # 700745726	Flow Meter from Parts # 700745726		Flow Meter from Parts # 700745726	
MFVF24-30 (6 mph Maximum Speed)					
Target Application Rates	Below 6 GPA with Automatic Rate Control	7 to 10 GPA with Automatic Rate Control	10 to 20 GPA with Automatic Rate Control	5 to 10 GPA with Manual Rate Control	10 to 20 GPA with Manual Rate Control
Pump and Drive	Electric Pump and Variable Rate Drive UN30, UN31	Centrifugal Pump and Variable Rate Drive UN28, UN29	Centrifugal Pump and Variable Rate Drive UN28, UN29	Dual Piston Pump and Contact Wheel Drive UN25, UN27, UN20	Dual Piston Pump and Contact Wheel Drive UN25, UN27, UN20
Flow Meter	Flow Meter from Parts # 700745726	Flow Meter from Parts # 700745726		Flow Meter from Parts # 700745726	

MASSEY FERGUSON®

ORDER CODE	CATALOG NUMBER	DESCRIPTION	FACTORY CODE	APPROX. WEIGHT (lb.)	LIST PRICE
MFVF12-30 Liquid Fertilizer Tank Packages (Factory Installed)					**Required**
Note: CF10 - With 1.9 Bushel Hoppers, Allows the use of 750 Gallon Fertilizer Tank Package CF11 - 90 Bushel CFS for 12 Row Allows the use of 300 Gallon Fertilizer Tank Package					
35-UN10	6400930	Without Liquid Fertilizer Tank Package			No Charge
		For use without CFS			
35-UN02	6400208	750 Gallon (2839 L) Liquid Fertilizer Tank	83C3448		4,479.00
35-UN12	6400208	750 Gallon (2839 L) Liquid Fertilizer Tank	83C3448		4,479.00
	ACX3472190	Single Piston Pump and Contact Wheel Drive and Lock-up .	39C5241		6,807.00
	6400398	Tank Plumbing Package	47C778		1,011.00
	6400882	Outlet Manifold with Orifices	30C762		990.00
35-UN15	6400208	750 Gallon (2839 L) Liquid Fertilizer Tank	83C3448		4,479.00
	ACX3472190	Single Piston Pump and Contact Wheel Drive and Lock-up .	39C5241		6,807.00
	6400398	Tank Plumbing Package	47C778		1,011.00
	6400883	Flow Divider	31C1696		2,203.00
		For use with CFS			
35-UN08	6400404	300 Gallon (1136 L) Liquid Fertilizer Tank	53C2301		2,989.00
35-UN11	6400404	300 Gallon (1136 L) Liquid Fertilizer Tank	53C2301		2,989.00
	ACX3472190	Single Piston Pump and Contact Wheel Drive and Lock-up .	39C5241		6,807.00
	6400401	Tank Plumbing Package	76C683		888.00
	6400882	Outlet Manifold with Orifices	30C762		990.00
35-UN14	6400404	300 Gallon (1136 L) Liquid Fertilizer Tank	53C2301		2,989.00
	ACX3472190	Single Piston Pump and Contact Wheel Drive and Lock-up .	39C5241		6,807.00
	6400401	Tank Plumbing Package	76C683		888.00
	6400883	Flow Divider	31C1696		2,203.00
		Tow Behind - Requires Tow Hitch			
35-UN19	ACX3472190	Single Piston Pump and Contact Wheel Drive and Lock-up .	39C5241		6,807.00
	6400883	Flow Divider	31C1696		2,203.00

ORDER CODE	CATALOG NUMBER	DESCRIPTION	FACTORY CODE	APPROX. WEIGHT (lb.)	LIST PRICE

MFVF16-30 Liquid Fertilizer Tank Packages (Factory Installed) — Required

Note: CF10 - With 1.9 Bushel Hoppers, Allows the use of 750 Gallon Fertilizer Tank Package
CF12 - 90 Bushel CFS for 16 and 24 Row Allows the use of 500 Gallon Fertilizer Tank Package

35-UN10	6400336	Without Liquid Fertilizer Tank Package			No Charge
		For use without CFS			
35-UN02	6400208	750 Gallon (2839 L) Liquid Fertilizer Tank	83C3448		4,479.00
35-UN12	6400208	750 Gallon (2839 L) Liquid Fertilizer Tank	83C3448		4,479.00
	ACX3472260	Single Piston Pump and Contact Wheel Drive	37C3373		4,381.00
	6401508	Tank Plumbing to Single Piston Pump	31C695		903.00
	6401537	Pump Outlet Plumbing with Orificed Boom Sections	24C1549		2,012.00
35-UN15	6400208	750 Gallon (2839 L) Liquid Fertilizer Tank	83C3448		4,479.00
	ACX3472260	Single Piston Pump and Contact Wheel Drive	37C3373		4,381.00
	6401508	Tank Plumbing to Single Piston Pump	31C695		903.00
	6401523	Pump Outlet Plumbing	53C222		289.00
	6400213	Flow Divider	94C2480		3,222.00
		For use with CFS			
35-UN08	ACX2832310	500 Gallon (1893 L) Liquid Fertilizer Tank and Mounting Cradle	01C2628		3,413.00
35-UN24	ACX2832310	500 Gallon (1893 L) Liquid Fertilizer Tank and Mounting Cradle	01C2628		3,413.00
	ACX3472260	Single Piston Pump and Contact Wheel Drive	37C3373		4,381.00
	6401504	Tank Plumbing to Single Piston Pump	31C695		903.00
	6401515	Pump Outlet Plumbing with Orificed Boom Sections	24C1549		2,012.00
35-UN26	ACX2832310	500 Gallon (1893 L) Liquid Fertilizer Tank and Mounting Cradle	01C2628		3,413.00
	ACX3472260	Single Piston Pump and Contact Wheel Drive	37C3373		4,381.00
	6401504	Tank Plumbing to Single Piston Pump	31C695		903.00
	6401523	Pump Outlet Plumbing	53C222		289.00
	6400213	Flow Divider	94C2480		3,222.00
		Tow Behind - Requires Tow Hitch			
35-UN19	ACX3472260	Single Piston Pump and Contact Wheel Drive	37C3373		4,381.00
	6401540	Plumbing Kit for Tow Behind	11C341		443.00
	6401523	Pump Outlet Plumbing	53C222		289.00
	6400213	Flow Divider	94C2480		3,222.00

MASSEY FERGUSON®

ORDER CODE	CATALOG NUMBER	DESCRIPTION	FACTORY CODE	APPROX. WEIGHT (lb.)	LIST PRICE
MFVF24-30 Liquid Fertilizer Tank Packages (Factory Installed)					**Required**
Note: CF10 - With 1.9 Bushel Hoppers, Allows the use of 750 Gallon Fertilizer Tank Package CF12 - 90 Bushel CFS for 16 and 24 Row Allows the use of 500 Gallon Fertilizer Tank Package					
35-UN10	6400336	Without Liquid Fertilizer Tank Package			No Charge
		For use without CFS			
35-UN02	6400208	750 Gallon (2839 L) Liquid Fertilizer Tank	83C3448		4,479.00
35-UN13	6400208	750 Gallon (2839 L) Liquid Fertilizer Tank	83C3448		4,479.00
	ACX3472270	Dual Piston Pump and Contact Wheel Drive	54C5083		6,602.00
	6401522	Tank Plumbing to Dual Piston Pump	96C729		948.00
	6401492	Pump Outlet Plumbing with Orificed Boom Sections	70C2086		2,710.00
35-UN16	6400208	750 Gallon (2839 L) Liquid Fertilizer Tank	83C3448		4,479.00
	ACX3472270	Dual Piston Pump and Contact Wheel Drive	54C5083		6,602.00
	6401522	Tank Plumbing to Dual Piston Pump	96C729		948.00
	6401513	Pump Outlet Plumbing	51C433		563.00
	6400216	Flow Divider	62C3392		4,406.00
		For use with CFS			
35-UN08	ACX2832310	500 Gallon (1893 L) Liquid Fertilizer Tank and Mounting Cradle	01C2628		3,413.00
35-UN25	ACX2832310	500 Gallon (1893 L) Liquid Fertilizer Tank and Mounting Cradle	01C2628		3,413.00
	ACX3472270	Dual Piston Pump and Contact Wheel Drive	54C5083		6,602.00
	6401505	Tank Plumbing to Dual Piston Pump	96C729		948.00
	6401516	Pump Outlet Plumbing with Orificed Boom Sections	70C2086		2,710.00
35-UN27	ACX2832310	500 Gallon (1893 L) Liquid Fertilizer Tank and Mounting Cradle	01C2628		3,413.00
	ACX3472270	Dual Piston Pump and Contact Wheel Drive	54C5083		6,602.00
	6401505	Tank Plumbing to Dual Piston Pump	96C729		948.00
	6401513	Pump Outlet Plumbing	51C433		563.00
	6400216	Flow Divider	62C3392		4,406.00
		Tow Behind - Requires Factory Installed Rear Tow Hitch			
35-UN20	ACX3472270	Dual Piston Pump and Contact Wheel Drive	54C5083		6,602.00
	6401541	Plumbing Kit for Tow Behind	11C341		443.00
	6401513	Pump Outlet Plumbing	51C433		563.00
	6400216	Flow Divider	62C3392		4,406.00

ORDER CODE	CATALOG NUMBER	DESCRIPTION	FACTORY CODE	APPROX. WEIGHT (lb.)	LIST PRICE
Rear Tow Hitch - Order One per Planter (Factory Installed)					**Required**
		12 Row Planters			
31-P700	6400266	Without Tow Hitch for 90 Bushel CFS (Not for Use with CF10)			No Charge
31-P711	6400445	Rear Tow Hitch with Fertilizer Plumbing (for 1.9 Hoppers and 90 Bushel)	40C1478	25	1,920.00
31-P710	6400267	Without Tow Hitch for Non CFS			No Charge
		16 Row Planters			
31-P700	6400266	Without Tow Hitch for 90 Bushel CFS (Not for Use with CF10)			No Charge
31-P709	6400268	Rear Tow Hitch for 90 Bushel CFS	29C1137	25	1,477.00
31-P710	6400267	Without Tow Hitch for Non CFS			No Charge
31-P708	6400207	Rear Tow Hitch for Non CFS.	29C1137	25	1,477.00
		24 Row Planters			
31-P700	6400266	Without Tow Hitch for 90 Bushel CFS (Not for Use with CF10)			No Charge
31-P709	6400268	Rear Tow Hitch for 90 Bushel CFS	29C1137	25	1,477.00
31-P710	6400267	Without Tow Hitch for Non CFS			No Charge
31-P708	6400207	Rear Tow Hitch for Non CFS.	29C1137	25	1,477.00

Note: Rear Tow Hitch is for Towing up to 2,000 gallon (7570L) Liquid Fertilizer Tank

Fertilizer Opener Packages (Factory Installed)					**Optional**
Includes Mounting Brackets - Order One Per Planter					
		12 Row Planters			
19-K202	6400906	Single Disc Fertilizer Openers - Liquid Side Knife	04C8125		10,552.00
		16 Row Planters			
19-K202	6400775	Single Disc Fertilizer Openers - Liquid Side Knife	90C10833		14,070.00
19-K201	6400772	Double Disc Fertilizer Openers	36C7444		9,668.00
		24 Row Planters			
19-K202	6400776	Single Disc Fertilizer Openers - Liquid Side Knife	62C16251		21,106.00
19-K201	6400773	Double Disc Fertilizer Openers	31C11167		14,503.00

Note: Single Disc Side Knife Fertilizer Opener is Not for Use with Row Unit Mounted Tillage Coulter/Residue Manager Combo

Liquid Fertilizer Opener Hose (Dealer Installed)					**Optional**
	6100200M	Roll of Fertilizer Opener Hose, 3/8 inch x 48 Ft MFVF12-30 Order 4 Rolls MFVF16-30 Order 6 Rolls MFVF24-30 Order 8 Rolls	46C075		98.00

MASSEY FERGUSON®

ORDER CODE	CATALOG NUMBER	DESCRIPTION	FACTORY CODE	APPROX. WEIGHT (lb.)	LIST PRICE

Liquid Fertilizer Attachments (Dealer Installed)

Order Instructions

1. Order 1 Liquid Fertilizer Tank and Mounting Brackets)
2. Order Rear Tow Hitch if Desired
3. Order Tank Plumbing Kit if Desired
4. Order Fertilizer Pumps and Drives
5. Order Pump Plumbing Package
6. Order Flow Divider or Outlet Manifold
7. Order Opener Hose
8. Order Fertilizer Openers and Mounting Brackets if Desired

Liquid Fertilizer Tanks and Mounting Brackets (Dealer Installed) — Optional

	12 Row Planters			
6001394M	300 Gallon (1136 L) Liquid Fertilizer Tank	53C2301		2,989.00
	16 Row and 24 Row Planters			
ACX2832340M	500 Gallon (1893 L) Liquid Fertilizer Tank and Cradle (Fits Heavy Duty CFS Frame)	01C2628		3,413.00
6001207M	750 Gallon (2839 L) Liquid Fertilizer Tank and Cradle, Non-CFS Planters Only	83C3448		4,479.00

Rear Tow Hitch (Dealer Installed) — Optional

For Towing up to 2,000 Gallon (7570 L) Liquid Fertilizer Tank

	12 Row Planters			
6001393M	Rear Tow Hitch for with Fertilizer Plumbing	40C1478		1,920.00
	16 Row and 24 Row Planters			
6001228M	Rear Tow Hitch	29C1137	280	1,477.00

Tank Plumbing Kit (Dealer Installed) — Optional

Includes Hoses and Fittings

	12 Row Planters			
6001465M	300 Gallon Tank Plumbing Kit	59C667		867.00
	16 Row and 24 Row Planters			
ACX2832350M	500 Gallon Tank Plumbing Kit (Contains Components Required for Tank Inlet Plumbing and Inlet Plumbing to Single or Double Piston Pumps)	61C687		893.00
6001218M	750 Gallon Tank Plumbing Kit	77C770		1,001.00

Fertilizer Pumps and Drives (Dealer Installed) — Optional

	12 Row Planters			
ACX3383190M	Single Piston Pump and Contact Wheel Drive	35C3430		4,455.00
ACX3383170M	Contact Wheel Drive without Pump	94C1710	115	2,222.00
	16 Row Planters			
ACX3383200M	Single Piston Pump and Contact Wheel Drive	37C3373	65	4,381.00
ACX3383180M	Contact Wheel Drive without Pump	94C1710	115	2,222.00
6001086M	Piston Pump Plumbing Kit	53C222	5	289.00
	24 Row Planters			
ACX3383210M	Double Piston Pump and Contact Wheel Drive	87C4412	110	5,731.00
ACX3383180M	Contact Wheel Drive without Pump	94C1710	115	2,222.00

Pumps and Drives Kit - Single or Double Piston Pumps
Piston Pump Plumbing Kit requires Flow Divider or Outlet Manifold (Includes Fittings and Hose to Flow Divider or Outlet Manifold)

ORDER CODE	CATALOG NUMBER	DESCRIPTION	FACTORY CODE	APPROX. WEIGHT (lb.)	LIST PRICE
Flow Divider or Outlet Manifold Completing Package (Dealer Installed)					**Optional**
Required for Piston Pump Only					
		16 Row Planters			
	6100219M	16 Row Outlet Manifold (with Orifices and Check Valves) (Order Quantity 1 for MFVF16-30)	40C1016		1,320.00
		24 Row Planters			
	6100199M	12 Row Flow Divider (Order Quantity 2)	16C1623		2,108.00
		12 Row and 24 Row Planters			
	6100195M	12 Row Outlet Manifold (with Orifices and Check Valves) (Order Quantity 1 for MFVF12-30 or 2 for MFVF24-30)	74C740		962.00
Liquid Fertilizer Opener Hose (Dealer Installed)					**Optional**
	6100200M	Roll of Fertilizer Opener Hose, 3/8 inch x 48 Ft MFVF12-30 Order 4 Rolls MFVF16-30 Order 6 Rolls MFVF24-30 Order 8 Rolls	46C075		98.00
Liquid Fertilizer Openers (Dealer Installed) Order One per Two Row Units					**Optional**
	6000527M	Single Disc Fertilizer Opener - Liquid Side Knife	22C1067		1,386.00
	6100459M	Double Disc Opener-13-1/2 inch Diameter. (MFVF16-30 and MFVF24-30)	5C666	75	865.00
Note: Single Disc Fertilizer Openers can not be used with Tillage/Coulter Residue Manager Combination					
Fertilizer Opener Mounting Brackets- Order One per Planter					**Optional**
(For use with Double Disc or Side Knife Fertilizer Openers Only)					
		12 Row Planters			
	6001485M	Fertilizer Opener Mounting Brackets for Single Disc	16C2855		3,708.00
		16 Row Planters			
	6001215M	Fertilizer Opener Mounting Brackets	77C2618	340	3,401.00
		24 Row Planters			
	6001216M	Fertilizer Opener Mounting Brackets	82C3977		5,166.00
		16 Row and 24 Row Planters Only			
	6001068M	Offset Shank Set for Single Disc Fertilizer Openers Order One per Four Rows (Required to Mount Liquid Side Knife)	89C197	101	257.00

MASSEY FERGUSON®

ORDER CODE	CATALOG NUMBER	DESCRIPTION	FACTORY CODE	APPROX. WEIGHT (lb.)	LIST PRICE
Preservative Coating (Factory Installed) - Order One per Planter					**Optional**
	700963426M	Preservative Coating - Fluid Film . . . . . (Recommended for Protection When Shipped in Winter Months)	19C806		1,047.00
Monitor System (Dealer Installed) - Order One per Planter					**Required**
Requires 6000923M Radar Ground Speed and Distance Sensing Gun or 6100064M Radar "Y" Harness. For Use on tractor with Radar. If Tractor is Equipped with an Integrated C1000 Terminal / Monitor, Order 6000993M					
	ACX3550660M	**20/20 SeedSense (Gen 2) Monitor Base Kit** - Includes . Display Base Module, Speed Harness (GPS/Radar), Cab Power Harness, Implement CAN Harness, and 10.1 Inch Display Screen	83C2524		3,279.00
	6000993M	Without Monitor (VE and VER Planters Require a . . . . . 20/20 SeedSense System to Operate. Order Without Monitor if Customer has a 20/20 SeedSense System)			No Charge
ADDITIONAL SEEDSENSE® MONITOR OPTION:					
	ACX2577030M	FieldView Module Kit to Connect to Climate Corporation's . FieldView Service, Sends Data to an iPad (This kit is not needed when pairing with a Gen 2 20/20 Monitor)	70C469		610.00
Ground Speed Sensor (Dealer Installed) - Order One per Planter					**Required**
VE and VER Planters with 20/20 SeedSense , vSet Meter and vDrive Require Both Radar and GPS to Operate Correctly. If Radar is Selected, you must also Select Multiple Radar "Y" Harness kits to Connect the Radar to the 20/20 monitor in the Tractor Cab.					
	6000923M	Radar Ground Speed and Distance Sensing Gun	48C865	15	1,124.00
	6100064M	Radar "Y" Harness (12 ft Length) . . . . . (4 Pin Round Tractor Connector to 4 Pin Round Monitor Connector) (Order Qty Required)	51C125		163.00
	6000810M	Without Ground Speed and Distance Sensing . . . . . (For Use with 6000100)			No Charge

Note: Part # 72515753 - Radar "Y" Harness
(4 Pin Flat Tractor Connector to a 4 Pin Round Monitor Connector)
(Above Two "Y" Harnesses for Tractors Equipped with Radar Speed Sensing)

ORDER CODE	CATALOG NUMBER	DESCRIPTION	FACTORY CODE	APPROX. WEIGHT (lb.)	LIST PRICE

Lift/Transport Tire Mud Scrapers (Factory Installed) - Order One per Planter — Optional

Quantity 4 is Maximum Allowed per Planter for Factory and Dealer Installed Combined

12 Row

15-PH01	6400674	Lift/Transport Tire Mud Scraper For Drive Wheel (Includes Two)	32C320		416.00
15-PH03	6400881	Lift/Transport Tire Mud Scraper For Drive Wheel (Includes Six)	96C960		1,248.00

16 Row and 24 Row

15-PH01	6401483	Lift/Transport Tire Mud Scraper For Drive Wheel (Includes Two)	32C320		416.00
15-PH04	6401484	Lift/Transport Tire Mud Scraper For Drive Wheel (Includes Eight) (For 24 Row order Two Additional from Dealer Installed)	28C1281		1,664.00

Lift/Transport Tire Mud Scraper (Dealer Installed) - Order Quantity as Noted — Optional

12 Row Planters

	6001447M	Lift/Transport Tire Mud Scraper	62C158		206.00

16 Row and 24 Row Planters

	6001941M	Lift/Transport Tire Mud Scraper	16C160		208.00

Note: Mud Scrapers are Recommended for the Contact Drive Tire When Ground Drive Piston Fertilizer Pump Option is Selected.
Quantity of Mud Scrapers: 6 on 12 Row, 8 on 16 Row, 10 on 24 Row

Markers and Discs (Dealer Installed) - Order One per Planter — Optional

	ACX3383120M	Tri-Fold Markers with Notched Marker Discs (16 Row)	82C10137		13,166.00
	ACX3383220M	Tri-Fold Markers with Notched Marker Discs (24 Row)	28C13062		16,964.00

PTO Pump (Dealer Installed) - Order One per Planter — Optional

	6001449M	40 GPM PTO Pump with 25 Gallon Reservoir and 1-3/8 inch PTO Spline Shaft (for 12 Row Hydraulic Drive Planters Only) Does Not Require PTO Pump Adapter, Requires some Modification to Mount to Planters.	52C2830		3,676.00

SpeedTube® Conversion Kits (Dealer Installed) - Order One per Planter — Optional

Note: For DeltaForce® Equipped Planters Only. Depending on Model, Alternator May Also be Required.
For MY17, Order Speed Tube Meter Position Update Kit

	ACX2577060M	SpeedTube® Conversion Kit (Precision Planting - 12 Row).	93C11248		14,609.00
	ACX2473870M	SpeedTube® Conversion Kit (Precision Planting - 16 Row).	83C14998		19,479.00
	ACX2577110M	SpeedTube® Conversion Kit (Precision Planting - 24 Row).	86C22497		29,218.00
	ACX3383130M	SpeedTube® Meter Position Update Kit (Order One per 4 Rows)			No Charge

Electric Power System (Dealer Installed) - Order One per Planter — Optional

Note: See Power Required Chart Below - Not Required if Factory Installed **KB15 DeltaForce® , Alternator Included** is Selected

	6001922M	Alternator (Precision Planting - 12 Row)	30C1455		1,890.00
	6001924M	Alternator (Precision Planting - 16 Row and 24 Row)	30C1455		1,890.00

MASSEY FERGUSON®

ORDER CODE	CATALOG NUMBER	DESCRIPTION	FACTORY CODE	APPROX. WEIGHT (lb.)	LIST PRICE
Hoppers and Meters (Dealer Installed) - Order One per Row					**Optional**
	ACX3512220M	1.9 Bushel Hopper and vSet® 2 Meter, vDrive, and Corn Crop Kit	51C664		863.00
	ACX3512230M	1.9 Bushel Hopper and vSet 2 Meter, vDrive, Corn Crop Kit, and Mounting Brackets for VE Row Unit	73C730		949.00
	ACX2577080M	CFS Mini-Hopper Meter and Assembly	51C664		863.00
Seed Hopper (Dealer Installed) - Order One per Row					**Optional**
	ACX3511700M	Mini-Hopper and Meter for Precision Planting	51C664		863.00
Seed Tubes and Sensors (Dealer Installed) - Order One per Row **Must be ordered separately from Serialized Planter using the Field Installed Option Tab in eOrdering**					**Optional**
	ACX3512280M	Bullseye Tube and High Rate Sensor	46C152		198.00
	ACX3512290M	Wave Vision Seed Sensors for vSet Meters	88C187		244.00
Closing System for Row Unit Includes Brackets (Dealer Installed) **Order One per Row**					**Optional**
	ACX3100690M	Angled Bracket with Rubber Closing Wheels	16C237	19	308.00
	ACX3100700M	Angled Bracket with Cast Closing Wheels	12C274	54	356.00
	ACX3100710M	Angled Bracket without Closing Wheels (Order Dealer Installed Closing Wheels)	98C133		174.00
Closing Wheels (Dealer Installed) - Order One per Row					**Optional**
	6100103M	Angled Rubber Closing Wheels (Pair), without Bracket (Requires Planter be Equipped with LR13, Angled Bracket without Closing Wheel)	48C095	19	124.00
	6100101M	Angled Cast Closing Wheels (Pair), without Bracket (Requires Planter be Equipped with Angled Rubber Closing Wheels or LR13, Angled Bracket without Closing Wheel)	07C147	46	191.00
Row Unit Gauge Wheels (Dealer Installed) - Order One per Row **Note:** Gauge Wheels include Mounting Bolts					**Optional**
	6002062M	Solid Gauge Wheel, 4-1/2 Inch	99C143		187.00
	6002063M	Spoked Gauge Wheel, 4-1/2 Inch	74C124		162.00
	6002064M	Solid Gauge Wheel, 3-Inch	75C134		175.00
	6002065M	Spoked Gauge Wheel, 3-Inch	27C116		151.00
Row Unit Gauge Wheel Scrapers (Dealer Installed) **Order One per 4 Rows**					**Optional**
	6001688M	Gauge Wheel Mud Scraper, 4-1/2 Inch (Order 1 per 4 Rows)	56C098		128.00

ORDER CODE	CATALOG NUMBER	DESCRIPTION	FACTORY CODE	APPROX. WEIGHT (lb.)	LIST PRICE

NOTE: Only ONE of the Following Tillage Attachments can be used at a time:
Tillage Coulters
12-inch Disc Furrower
Bed Leveler Attachment
Strip-Ridge Till Coulters
Spring Tine Tillage Attachment

Row Unit Mounted Tillage Coulters (Dealer Installed) - Order One Per Row — Optional

Heavy Duty Down Pressure Springs or Pneumatic Down Pressure System Recommended
Recommend Using a Smaller Diameter Blade with DeltaForce to Avoid Contact with DeltaForce Mounting Hardware

6001691M	Coulter Bracket with Bubble Blade (16-inch Diameter)	74C278	41	362.00
6001692M	Coulter Bracket with Ripple Blade (16-inch Diameter)	74C278	41	362.00
6001694M	Coulter Bracket with 13 Flute Blade (16-inch Diameter)	43C276	37	359.00
6001695M	Coulter Bracket with 25 Flute Blade (16-inch Diameter)	43C276	37	359.00

Residue Managers (Dealer Installed) - Order One per Row — Optional

6001655M	Residue Manager Attachment, 13-inch Steel Wheel with 16 Fingers and Bearing Shields (For Use without Tillage Coulters)	32C320	42	416.00
6001656M	Pin Adjust Residue Manager without Depth Band, with SharkTooth® Wheel, 13-inch Steel Wheel with 12 Teeth, Includes Bracket and Hardware (For Use without Tillage Coulters)	73C345		449.00
ACX2832210M	Short Pin Adjust Floating Residue Manager without Wheels (For Use with Yetter Residue Manager Wheels	14C217		282.00

Combination Residue Manager Arm and Wheel (Dealer Installed) — Optional

Order One per Row

6001245M	Pin Adjust Floating Residue Manager Arm with SharkTooth Wheel for No-Till Coulter (For Use with Tillage Coulters)	42C343		446.00

Yetter Residue Manager Wheels (Dealer Installed) - Order One per Row — Optional

For Use with ACX2832210M

ACX2473480M	13-inch SharkTooth Wheels with Depth Band	73C345		449.00
ACX2577210M	13-inch Beveled Wheels with Depth Band	73C345		449.00

Display Carts (Dealer Installed) — Optional

ACX3469930M	Display Cart with Precision Planter Meter Kit, Mini-Hopper with Bullseye Tube	30C3072		3,990.00
ACX3470090M	Display Cart with Precision Planter Meter Kit, Mini-Hopper with SpeedTube	45C3453		4,485.00

VE Track Planter

F.O.B. Wahpeton, North Dakota - **TRUCK SHIPMENTS ONLY**

24 Row, 30 inch Spacing
- 60 Foot Three-Section Flex (+/- 42 Degrees Total) Toolbar
- 25-inch or 30-inch x 67-inch Rubber Camso Track System
- 12 x 12 inch Structural Frame
- 10 x 10 inch Auto-Latch Telescoping Tongue
- All Hydraulic Hoses, Lift and Fold Cylinders
- Hydraulic Forward-Folding Wings
- Narrow Transport (Wings Rotate 90 Degrees)
- (4) 16.5 x 12, 12 Ply, Position Adjustable Wing Wheels
- Swivel Implement Hitch (Cat IV or Cat V Pin)
- Hydraulic Controlled Parking Stand
- Three Hydraulic Vacuum Fans
- 150 Bushel CFS Seed Delivery System (2 - 75 Bushel Tanks)
- DeltaForce Automatic Hydraulic Down Pressure System with Smart Pins and Alternator
- All Cast Planting Units
- vSet Meters with vDrive (12 volt Electric Drive)
- Individual Row Control Single Row Modules (SRM 3 and CAN Extension Hub - One per Row)
- Corn Crop Kits
- 15.8 X .138 inch (401.3 x 3.5 mm) Double Disc Openers
- Keeton & Furrow Jet "Quick-Attach" Mounting Brackets
- Transport Lighting
- Transport Chain

Hydraulics
- 4 Lift Sequencing Cylinders
- 2 Wing Fold Cylinders with Tongue Latch
- 4 Tool Bar Tilt Cylinders
- Complete with Hose, Hardware and Hydraulic Couplers

Tractor Requirements:
- 275 Minimum HP @ 5mph
- 375 Minimum HP @ 10mph
- 12 Volt Electric System

Hydraulic Requirements:
- 61 gallon per minute
- 6 Hydraulic Remotes:
  1. Frame Lift and CFS
  2. Frame Fold
  3 & 4. Vacuum, DeltaForce and Alternator Group
  5. Markers
  6. Jack Stand

- **Central Fill Systems (CFS) Planters are Primarily Equipped to Plant corn and Soybeans with the Appropriate Sized Air Discharge Screen Installed in the Mini Hopper of each Meter Assembly. Screens Designed for Smaller Seeds such as Milo can be Ordered Separately (Precision Planting Part #720253 D-Tube Screen, Milo. Order One per 4 Rows.)**

Transport and Frame Specifications

Rows	Spacing	Transport Length	Transport Width	Transport Height
24	30"	37' 6"	15'	12' 8"

Shipping Dimensions				
Model	Length (mm)	Height (mm)	Width (mm)	Weight (kg)
MFVT24-30	37' 6" (11430)	12' 8" (3657)	15' 0" (4927)	46,000 (20865)

Ordering Instructions:
Planters are Now Available with many Items Factory Installed
Factory Installed items are not Eligible for Return to the Factory

1.Order Required Seed Discs
2.Select One Order Code from Base, and One Order Code from Each Group as Required
3.Additional Dealer Installed Items can be Ordered for these Models from this Chapter and from Dealer Installed Section
4.Accepts Row Unit Mounted Tillage Attachments Only

ORDER CODE	CATALOG NUMBER	DESCRIPTION	FACTORY CODE	APPROX. WEIGHT (lb.)	LIST PRICE
PULL-TYPE FORWARD FOLD TOOL BAR					
MFVT24-30	ACX3383290	Vacuum Electric Track, 24 Row 30-inch	75C201951	46000	262,275.00

ORDER CODE	CATALOG NUMBER	DESCRIPTION	FACTORY CODE	APPROX. WEIGHT (lb.)	LIST PRICE
Running Gear (Factory Installed) - Order One per Planter					**Required**
39-T302	354721AWF	Axle 120-inch Center for 25-inch Wide Track with 25" x 67" Rubber Track System (Payload NOT to exceed 60,000 lbs. - Row Units Included)	10C35674	5800	46,330.00
39-T301	354719AWF	Axle 120-inch Center for 30-inch Wide Track with 30" x 67" Rubber Track System (Payload NOT to exceed 70,000 lbs. - Row Units Included)	29C36634	6200	47,577.00
Seed Tanks (Factory Installed) - Order One per Planter					**Required**
18-CF18	248030AWF	Set of Two 75 Bushel Seed Tanks and Covers (Without Fill System) Includes Mounts, Platform and Rear Staircase		2418	In Base
Markers (Factory Installed) - Order One per Planter					**Optional**
2-P230	360163AWF	Hydraulic Row Markers (Not for use with Ballast Option 360143AWF)	66C9669	2195	12,558.00
Seed Hoppers and Meters (Factory Installed)					**Required**
5-HO14	ACX3383230	Mini Hoppers and Meters for CFS, Precision Planting			In Base
5-HO18	ACX3383240	Mini Hoppers and Meters for use with SpeedTubes® and CFS			No Charge
Seed Tubes and Sensors (Factory Installed)					**Required**
16-P301	ACX3382780	Bullseye Seed Tubes with High Rate Sensors	43C3741		4,859.00
16-P304	ACX3382810	Seed Tubes with Wave Vision Seed Sensors	88C4499		5,844.00
16-P307	ACX3383020	SpeedTubes® (Requires HO18 Hoppers)	14C30247		39,282.00

MASSEY FERGUSON®

ORDER CODE	CATALOG NUMBER	DESCRIPTION	FACTORY CODE	APPROX. WEIGHT (lb.)	LIST PRICE

Precision Planting Crop Kits (Dealer Installed) — Optional

Note: Each Seed Hopper/Meter contains a set of Corn Crop Kit vSet2 #6001896M. Order additional as required.

Seed Discs - Order <u>One Per Planter Row (Unless Otherwise Noted)</u>

6001896M	Crop Kit vSet	- Corn	46C075	98.00
6001897M	Crop Kit vSet	- Soybean (80 Hole)	46C075	98.00
ACX2577100M	Crop Kit vSet	- Soybean (56 Hole)	67C054	71.00
6001898M	Crop Kit vSet	- Medium Edible Bean	25C096	125.00
6001899M	Crop Kit vSet	- Large Edible Bean	21C056	73.00
6001900M	Crop Kit vSet	- 2 Seed Hill Drop Cotton	45C065	85.00
6001901M	Crop Kit vSet	- Small Sugar Beet and Onion (Requires Milo Screen Package 6001912M)	67C054	71.00
6001902M	Crop Kit vSet	- 3 Seed Hill Drop Cotton	45C065	85.00
6001903M	Crop Kit vSet	- Large Sugar Beet and Onion (Requires Milo Screen Package 6001912M)	67C054	71.00
6001904M	Crop Kit vSet	- Canola	21C056	73.00
6001905M	Crop Kit vSet	- Specialty Disk (.100 Diameter)	21C056	73.00
6001906M	Crop Kit vSet	- Specialty Disk (.115 Diameter)	21C056	73.00
6001907M	Crop Kit vSet2	- Specialty Disk (.125 Diameter)	21C056	73.00
6001908M	Crop Kit vSet	- Specialty Disk (.135 Diameter)	21C056	73.00
6001909M	Crop Kit vSet	- Specialty Disk (.145 Diameter)	21C056	73.00
6001910M	Crop Kit vSet	- Specialty Disk (.155 Diameter)	21C056	73.00
6001911M	Crop Kit vSet	- Specialty Ejector (Required for Specialty Disks above)	25C019	25.00
ACX2577090M	Crop Kit vSet	- Sugarbeet Ejector (Required for Specialty Disks above)	25C019	25.00
6001912M	Crop Kit vSet	- Milo Screen Package (Order One per 4 Rows) (For use with CFS Mini Hoppers Only)	82C050	66.00
6001913M	Crop Kit vSet	- Up Restricting Brush (For use with 2- or 3-Seed Hill Drop Cotton)	17C016	21.00
6001914M	Crop Kit vSet	- Large Seed Upper Brush	17C016	21.00
ACX3182820M	Crop Kit vSet	- Canola Screen Package (Order One per 4 Rows)	52C058	76.00
ACX3182830M	Crop Kit vSet	- Canola Wiper Kit	49C028	37.00
6002076M	**REQUIRED - vSet**	**Meter Flap** (Qty 18 for Planters with Rotating Toolbars/Row Units for Transport or Headland Turning)		No Charge

ORDER CODE	CATALOG NUMBER	DESCRIPTION	FACTORY CODE	APPROX. WEIGHT (lb.)	LIST PRICE
Row Unit Gauge Wheels (Factory Installed) - Order One per Planter					**Optional**
42-GW02	ACX2549670	Row Unit Solid Gauge Wheels - 4-1/2 inch (24 Row)	70C3164		4,110.00
42-GW01	ACW7056890	Without Row Unit Gauge Wheels (Gauge Wheel Mounting Hardware is NOT Present with this Selection)			No Charge
Row Unit Gauge Wheel Scrapers (Factory Installed) - Order 1 per Planter					**Optional**
7-PS01	6400851	Row Unit Gauge Wheel Scrapers	79C713		927.00
Closing System (Factory Installed) - Order One per Planter					**Required**
Note: Angled Closing Wheels are Factory Installed in the Staggered Position with the Left Wheel Forward & with Two Spacers under the Wheels					
12-LR11	6400838	Angled Bracket with Rubber Closing Wheels	38C5693	19	7,394.00
12-LR12	6400839	Angled Bracket with Cast Closing Wheels	78C6555	54	8,514.00
12-LR13	6400892	Angled Bracket Without Closing Wheels (Order Dealer Installed Closing Wheels)	76C1607		2,088.00
12-LR10	6400803	Without Closing Wheels and Brackets			No Charge
Row Unit Mounted Tillage (Factory Installed) - Order One per Planter					**Required**
Heavy Duty Down Pressure Springs Recommended; Row Unit Coulters not Recommended for use with DeltaForce®					
25-VA10	6400021	Without Unit Mounted Tillage Attachment			No Charge
25-VA16	6400845	Residue Manager - Finger Wheel 13-inch Steel Wheel with 16 Fingers (For use Without Tillage Coulters)	98C7679	37	9,974.00
25-VA19	6400846	Residue Manager - SharkTooth® Wheel 13-inch Steel Wheel with 12 Teeth (For Use Without Tillage Coulters)	98C8295		10,774.00
25-VA20	6400847	Floating Residue Manager - SharkTooth® Wheel with Depth Band, 13-inch Steel Wheel with 12 Teeth (For Use Without Tillage Coulters)	08C11245		14,604.00
25-VA11	6400544	Tillage Coulter without Blade. (Order Dealer Installed Coulter Blades)	96C5426		7,048.00
Combination Residue Manager (Factory Installed) - Order 1 per Planter					**Optional**
Requires Factory Installed Row Unit Mounted Tillage Coulter (VA11) Heavy Duty Down Pressure Springs Recommended; Row Unit Coulters not Recommended for use with DeltaForce®					
26-K102	6400600	Residue Manager Attachment 10-inch Steel Wheel with 16 Fingers and Bearing Shields	98C7679		9,974.00
26-K103	6400608	Residue Manager Attachment 13-inch Steel Wheel with 16 Fingers and Bearing Shields	98C7679		9,974.00
26-K104	6400616	Residue Manager Attachment 13-inch Steel SharkTooth® Wheel with 12 Teeth	30C7615		9,890.00

MASSEY FERGUSON®

ORDER CODE	CATALOG NUMBER	DESCRIPTION	FACTORY CODE	APPROX. WEIGHT (lb.)	LIST PRICE
Liquid Fertilizer Tanks and Mounting Brackets (Factory Installed) - Order One per Planter					
Note: VE Planters are equipped with non-ISO 20/20 SeedSense (Gen 2) monitors. Variable rate fertilizer application to maps will require an ISO monitor, OR liquid product control by vApply HD, a Precision Planting product controlled by the 20/20 SeedSense System.					
35-PL02	350888AWF	(2) 750 Gallon Liquid Fertilizer Tanks with Mounting Hardware	12C5202	1680	6,756.00
Rear Tow Hitch (Factory Installed) - Order One per Planter					**Required**
31-P715	241305AWF	Swivel Hitch Cat. IV (for 2 inch Pin)	09C321	60	417.00
31-P716	243805AWF	Swivel Hitch Cat. V (for 2-3/4 inch Pin)	09C321	60	417.00
Additional Equipment (Factory Installed) - Order One per Planter					**Optional**
11-P012	355416AWF	Cleated Belt Tube Conveyor Fill System 20 Bushels per minute, for use with Seed Tender, 10 Foot Conveyor Hopper Fill Heigh	70C4627	325	6,010.00
40-VP14	360189AWF	Digi-Star Scale System for Seed or Liquid Fertilizer	07C2380	10	3,091.00
41-Y001	360143AWF	Weight Ballast Package Adds Weight to Wings in lieu of Markers to Help Provide Consistent Planting Depth on 60 Foot and 66 Foot Wings and 90 Foot Outer Wings (Cannot be used in Conjunction with Markers)	45C1990	1673	2,585.00

ORDER CODE	CATALOG NUMBER	DESCRIPTION	FACTORY CODE	APPROX. WEIGHT (lb.)	LIST PRICE

Preservative Coating (Factory Installed) - Order One per Planter — Optional

	700963426M	Preservative Coating - Fluid Film . . . . . (Recommended for Protection When Shipped in Winter Months)	19C806		1,047.00

Monitor System (Dealer Installed) - Order One per Planter — Required

Requires 6000923M Radar Ground Speed and Distance Sensing Gun or 6100064M Radar "Y" Harness.
For Use on Tractor with Radar.

	ACX3550660M	**20/20 SeedSense (Gen 2) Monitor Base Kit** - Includes . Display Base Module, Speed Harness (GPS/Radar), Cab Power Harness, Implement CAN Harness, and 10.1 Inch Display Screen	83C2524		3,279.00
	6002075M	Without Monitor (VE and VER Planters Require a . . . . . 20/20 SeedSense System to Operate. Order Without Monitor if Customer has a 20/20 SeedSense System)			No Charge

ADDITIONAL SEEDSENSE® MONITOR OPTION:

	ACX2577030M	FieldView Module Kit to Connect to Climate Corporation's . FieldView Service, Sends Data to an iPad (This kit is not needed when pairing with a Gen 2 20/20 Monitor)	70C469		610.00

Ground Speed Sensor (Dealer Installed) - Order One per Planter — Required

VE and VER Planters with 20/20 SeedSense , vSet Meter and vDrive Require Both Radar and GPS to Operate Correctly.
If Radar is Selected, you must also Select Radar "Y" Harness kits to Connect Radar to the 20/20 in the Tractor Cab.

	6000923M	Radar Ground Speed and Distance Sensing Gun	48C865	15	1,124.00
	6100064M	Radar "Y" Harness (12 ft Length) . . . . . (4 Pin Round Tractor Connector to 4 Pin Round Monitor Connector) (Order Qty Required)	51C125		163.00
	6000810M	Without Ground Speed and Distance Sensing . . . . . (For Use with 6000100)			No Charge

Note: Part # 72515753 - Radar "Y" Harness . . . . . (4 Pin Flat Tractor Connector to a 4 Pin Round Monitor Connector) (Above Two "Y" Harnesses for Tractors Equipped with Radar Speed Sensing)

SpeedTube® Conversion Kits (Dealer Installed) - Order One per Planter — Optional

Note: For DeltaForce® Equipped Planters Only. Depending on Model, Alternator May Also be Required.

	ACX2577110M	SpeedTube® Conversion Kit (Precision Planting - 24 Row).	86C22497		29,218.00

Seed Tubes and Sensors (Dealer Installed) - Order One per Row — Optional

Must be ordered separately from Serialized Planter using the Field Installed Option Tab in eOrdering

	ACX3512280M	Bullseye Tube and High Rate Sensor	46C152		198.00
	ACX3512290M	Wave Vision Seed Sensors for vSet Meters	88C187		244.00

MASSEY FERGUSON®

ORDER CODE	CATALOG NUMBER	DESCRIPTION	FACTORY CODE	APPROX. WEIGHT (lb.)	LIST PRICE
Closing System for Row Unit Includes Brackets (Dealer Installed)					**Optional**
Order One per Row					
	ACX3100690M	Angled Bracket with Rubber Closing Wheels	16C237	19	308.00
	ACX3100700M	Angled Bracket with Cast Closing Wheels	12C274	54	356.00
	ACX3100710M	Angled Bracket without Closing Wheels (Order Dealer Installed Closing Wheels)	98C133		174.00
Closing Wheels (Dealer Installed) - Order One per Row					**Optional**
	6100103M	Angled Rubber Closing Wheels (Pair), without Bracket (Requires Planter be Equipped with LR13, Angled Bracket without Closing Wheel)	48C095	19	124.00
	6100101M	Angled Cast Closing Wheels (Pair), without Bracket (Requires Planter be Equipped with Angled Rubber Closing Wheels or LR13, Angled Bracket without Closing Wheel)	07C147	46	191.00
Row Unit Gauge Wheels (Dealer Installed) - Order One per Row					**Optional**
Note: Gauge Wheels include Mounting Bolts					
	6002062M	Solid Gauge Wheel, 4-1/2 Inch	99C143		187.00
	6002063M	Spoked Gauge Wheel, 4-1/2 Inch	74C124		162.00
	6002064M	Solid Gauge Wheel, 3-Inch	75C134		175.00
	6002065M	Spoked Gauge Wheel, 3-Inch	27C116		151.00
Row Unit Gauge Wheel Scrapers (Dealer Installed)					**Optional**
Order One per 4 Rows					
	6001688M	Gauge Wheel Mud Scraper, 4-1/2 Inch (Order 1 per 4 Rows)	56C098		128.00
Row Unit Mounted Tillage Coulters (Dealer Installed) - Order One Per Row					**Optional**

NOTE: Only ONE of the Following Tillage Attachments can be used at a time:
Tillage Coulters
12-inch Disc Furrower
Bed Leveler Attachment
Strip-Ridge Till Coulters
Spring Tine Tillage Attachment

Heavy Duty Down Pressure Springs or Pneumatic Down Pressure System Recommended
Recommend Using a Smaller Diameter Blade with DeltaForce to Avoid Contact with DeltaForce Mounting Hardware

6001691M	Coulter Bracket with Bubble Blade (16-inch Diameter)	74C278	41	362.00
6001692M	Coulter Bracket with Ripple Blade (16-inch Diameter)	74C278	41	362.00
6001694M	Coulter Bracket with 13 Flute Blade (16-inch Diameter)	43C276	37	359.00
6001695M	Coulter Bracket with 25 Flute Blade (16-inch Diameter)	43C276	37	359.00

ORDER CODE	CATALOG NUMBER	DESCRIPTION	FACTORY CODE	APPROX. WEIGHT (lb.)	LIST PRICE
Residue Managers (Dealer Installed) - Order One per Row					**Optional**
	6001655M	Residue Manager Attachment, 13-inch Steel Wheel with 16 Fingers and Bearing Shields (For Use without Tillage Coulters)	32C320	42	416.00
	6001656M	Pin Adjust Residue Manager without Depth Band, with SharkTooth® Wheel, 13-inch Steel Wheel with 12 Teeth, Includes Bracket and Hardware (For Use without Tillage Coulters)	73C345		449.00
	ACX2832210M	Short Pin Adjust Floating Residue Manager without Wheels (For Use with Yetter Residue Manager Wheels	14C217		282.00
Combination Residue Manager Arm and Wheel (Dealer Installed) **Order One per Row**					**Optional**
	6001245M	Pin Adjust Floating Residue Manager Arm with SharkTooth Wheel for No-Till Coulter (For Use with Tillage Coulters)	42C343		446.00
Yetter Residue Manager Wheels (Dealer Installed) - Order One per Row For Use with ACX2832210M					**Optional**
	ACX2473480M	13-inch SharkTooth Wheels with Depth Band	73C345		449.00
	ACX2577210M	13-inch Beveled Wheels with Depth Band	73C345		449.00

MASSEY FERGUSON®

Technology

Catalog Number	Description	Ordering Information

New Technologies

Note:

New GNSS Technologies are available on Common Electronic Architecture (CEA) platforms within the AGCO fleet.

Starting in 2016, this includes the Challenger 1000, Fendt S4 Series, RoGator C Series and the Gleaner S9.
(Excludes FT700S4 prior to version 772)

For all other AGCO products please refer to the Legacy technology section.

Auto-Guide™ Receivers

72618814	Trimble Receiver (Auto-Guide)	Order from Parts
72627726	Novatel Receiver (Auto-Guide)	Order from Parts
72618662	Novatel Receiver Adapter Harness	Order from Parts

Auto-Guide Upgrades and Subscriptions

72619394	Trimble Submeter to Decimeter Accuracy Upgrade	Order from Parts
72619395	Trimble Decimeter to Centimeter Accuracy Upgrade	Order from Parts

Note: Order both 72619394 and 72619395 for Trimble Submeter to Centimeter Accuracy Upgrade

ACP0144050	Trimble RangePoint RTX (1 year)	Order from Parts
ACP0152350	Trimble RangePoint RTX Trial (1 year)	Order from Parts
ACP0144140	**Trimble CenterPoint RTX Fast (1 year)	Order from Parts
ACP0144150	*Trimble CenterPoint RTX Standard (1 year)	Order from Parts
ACP0144200	NovAtel Submeter to Decimeter upgrade	Order from Parts
ACP0144210	NovAtel Decimeter to Centimeter upgrade	Order from Parts
72619393	NovAtel Submeter to Centimeter Accuracy Upgrade	Order from Parts
ACP0213770	TerraStar L - 1yr	Order from Parts
ACP0213780	TerraStar L - 2yr	Order from Parts
ACP0213790	TerraStar L - 3yr	Order from Parts
ACP0213700	*TerraStar C - 1mo	Order from Parts
ACP0213710	*TerraStar C - 3mo	Order from Parts
ACP0213720	*TerraStar C - 6mo	Order from Parts
ACP0213730	*TerraStar C - 1yr	Order from Parts
ACP0213740	*TerraStar C - 2yr	Order from Parts
ACP0213750	*TerraStar C - 3yr	Order from Parts

Auto-Guide Steering System

Required for the New Steering System

72618947	Navigation Controller with GSM Connection	Order from Parts
72619292	Navigation Controller with CDMA Connection	Order from Parts

Trimble AG-715 900 MHz Radio

Order All Parts Below to Complete the Trimble RTK Radio

72619270	Radio Trimble AG-715 900 MHz	Order from Parts
72491756	TNC Adapter	Order from Parts
72618811	Antenna GSM / CDMA 900 MHz	Order from Parts
72618670	Cable Antenna Trimble Modem	Order from Parts

*Decimeter accuracy upgrade required.

**Centimeter accuracy upgrade required.

Catalog Number	Description	Ordering Information

Quick Reference Guide for Ordering AUTO-GUIDE 3000

AUTO-GUIDE 3000 IS ONLY AVAILABLE ON THE FOLLOWING:

- Model Year 2013 and Newer Massey Ferguson and Challenger Tractors MF6600-7600-8600 (up to MY18)- or MF6700 through MF8700, excludes MY17. All S series machines including the MY18 8700 are not supported for Auto-Guide 3000.
- Model Year 2012 and Newer SP Windrowers
- Combines Using the C2100 Monitor
- RG700 Sprayers

IMPORTANT: ALL VEHICLES MUST BE FACTORY "GUIDANCE READY"
WATCH BULLETINS FOR FURTHER RELEASES

For Guidance Ready Vehicles: Tractors, SP Windrowers, RG700 Sprayers, or Combines

Based on Product:
The Following Items must be Ordered from Parts to Complete a Base Steering System

HHP Wheeled, Track or Articulated Tractors, SP Windrowers, and RG700 Sprayers

ACZ000039B	AUTO-GUIDE 3000 SubMeter Steering System (uses vehicle terminal, C1000)	Order from Parts

Combines

ACZ000039B	AUTO-GUIDE 3000 SubMeter Steering System (uses vehicle terminal, C2100)	Order from Parts
71441601	Remote Antenna Option ***REQUIRED***	Order from Parts

For WR Series SP Windrowers not ordered with Factory Installed AUTO-GUIDE 3000

Based on Product:
The Following Items must be Ordered from Parts and/or Wholegoods to Complete a Base Steering System

SP Windrowers (WR Series)

ACZ000039B	AUTO-GUIDE 3000 SubMeter Steering System (uses vehicle terminal, C1000)	Order from Parts
and		
700960387M	Wide Cab SP Windrower AUTO-GUIDE 3000 Installation Kit	Order from Parts
-or-		
700960388M	Narrow Cab SP Windrower AUTO-GUIDE 3000 Installation Kit	Order from Parts

*Note: If no Auto-Guide Rocker Switch is present in the Windrower cab, follow the 2012 upgrade instructions.

2012 SP Windrowers (WR Series) - UPGRADE INSTRUCTIONS:

If no Rocker Switch is present in the cab, order the two kits below in addition to above listed requirements:

72571047	AUTO-GUIDE 3000 Rocker Switch	Order from Parts
700743763	AUTO-GUIDE 3000 Wiring Harness	Order from Parts

Catalog Number	Description	Ordering Information

AUTO-GUIDE 3000 - Submeter Only

Available to receive WAAS or OmniStar VBS correction signal (VBS requires annual Subscription from OmniStar)

ACZ000039B	AUTO-GUIDE 3000 Submeter System . . . . . Includes: Receiver to Roof Connector Harness Roof mounting plate English operator manual	Order from Parts

Operator Manuals

ACZ000080A	Spanish operator manual	Order From AGCO Pubs
ACZ000082A	French operator manual.	Order From AGCO Pubs

AUTO-GUIDE 3000 - Decimeter Upgrade

Add to ACZ000039B to make AUTO-GUIDE 3000 Submeter System able to accept OmniStar XP and HP correction signals with subscription from OmniStar

ACZ000038A	AUTO-GUIDE 3000 Decimeter Snap-in module . . . . . Includes: Snap-in module English operator manual	Order from Parts
71441601	Remote Antenna (Required for Combines)	Order from Parts

Operator Manuals

ACZ0002430	Spanish operator manual	Order From AGCO Pubs
ACZ0002450	French operator manual.	Order From AGCO Pubs

AUTO-GUIDE 3000 - Centimeter Upgrade

Requires both ACZ000039B and ACZ000038A.
Needs either a CORS Network or a Base Station.

ACZ000062B	AUTO-GUIDE 3000 Centimeter GSM Snap-in Module	Order from Parts
71441601	Remote Antenna (Required for Combines)	Order from Parts
ACZ000175A	Centimeter Snap-in Module Antenna Kit . . . . . (Required for GSM or CDMA Snap-in Modules)	Order from Parts

Operator Manuals

ACZ0002580	Spanish Operator Manual	Order From AGCO Pubs
ACZ0002600	French Operator Manual	Order From AGCO Pubs

Catalog Number	Description	Factory Code	Ordering Information

AUTO-GUIDE 3000 Miscellaneous Accessories

700960387M	Wide Cab SP Windrower AUTO-GUIDE 3000 Installation Kit (WR Series only)	Order from Parts
700960388M	Narrow Cab SP Windrower AUTO-GUIDE 3000 Installation Kit (WR Series only)	Order from Parts
72451225	Tripod TP-100 Heavy Duty with Aluminum Extendable Legs	Order from Parts
72571047	Rocker Switch for 2012 SP Windrowers	Order from Parts
700743763	Wiring Harness for 2012 SP Windrowers	Order from Parts
4390411M12	Harness to add C3000 Monitor to a 2013 and newer Large Frame . HHP Wheel Tractors (NOTE: ORDER IN ADDITION TO C3000)	Order from Parts
573371D1	Harness to add C3000 Monitor to a 2013 and newer Track Tractor (NOTE: ORDER IN ADDITION TO C3000)	Order from Parts
ACZ000000B	C3000 Monitor only	Order from Parts

Catalog Number	Description	Ordering Information

AGCOMMAND

AgCommand Subscriptions and Hardware are now available as an aftermarket option through AGCO Parts!

AM53 telemetry units support 3G, GSM, and CDMA cellular networks.

100-xxx-xxxx is a AM53

AgCommand subscriptions available; for further detail see Parts Dealer Bulletin 121634550. Include hardware serial number for subscription ordering.

AGCO equipment produced prior to 2013 and all non-AGCO equipment should purchase StandardPlus subscription.

Advanced subscriptions recommended for AGCO production 2013 - present.

AGCOMMAND - HARDWARE

ACZ000163A	AM53 Telemetry Unit	Order from Parts

AGCOMMAND - HARDWARE INSTALLATION KITS

72570238	Universal Field Installation Kit for AGCO Equipment Produced Prior to 2013 and Non-AGCO Equipment	Order from Parts
539686D1	Installation Kit for Challenger MT700/800/900 Produced from 2013-2015	Order from Parts

AGCOMMAND - RENEWAL OR NEW SUBSCRIPTIONS

ACZ0001650	StandardPlus 1 Year	Order from Parts
ACZ0001660	StandardPlus 2 Years	Order from Parts
ACZ0001670	StandardPlus 3 Years	Order from Parts
ACZ0001680	Advanced 1 Year	Order from Parts
ACZ0001690	Advanced 2 Years.	Order from Parts
ACZ0001700	Advanced 3 Years.	Order from Parts

AGCOMMAND

UPGRADE FROM STANDARDPLUS TO ADVANCED SUBSCRIPTIONS

72571801	3 years remaining on StandardPlus subscription	Order from Parts
72571802	2 years, 9 months remaining	Order from Parts
72571803	2 years, 6 months remaining	Order from Parts
72571804	2 years, 3 months remaining	Order from Parts
72571805	2 years remaining	Order from Parts
72571806	1 year, 9 months remaining	Order from Parts
72571807	1 year, 6 months remaining	Order from Parts
72571808	1 year, 3 months remaining	Order from Parts
72571809	1 year remaining	Order from Parts
72571810	9 months remaining	Order from Parts
72571811	6 months remaining	Order from Parts
72571812	3 months remaining	Order from Parts

EXTENSIONS FOR NEW EQUIPMENT SUBSCRIPTIONS (WITHIN 60 DAYS OF ACTIVATION)

ACZ0004200	StandardPlus 1 Year to 2 Year	Order from Parts
ACZ0004210	StandardPlus 1 Year to 3 Year	Order from Parts
ACZ0004220	Advanced 1 Year to 2 Year	Order from Parts
ACZ0004230	Advanced 1 Year to 3 Year	Order from Parts

Catalog Number	Description	Ordering Information
ACM SUBSCRIPTIONS - USA		
ACP0231430	ACM Standard Plus 600 HR 1 Year	Order from Parts
ACP0231460	ACM Standard Plus 900 HR 1 Year	Order from Parts
ACP0231490	ACM Standard Plus 1200 HR 1 Year	Order from Parts
ACP0231520	ACM Standard Plus 1600 HR 1 Year	Order from Parts
ACP0231550	ACM Standard Plus 2000 HR 1 Year	Order from Parts
ACP0231760	ACM Advanced Plus 300 HR 1 Year	Order from Parts
ACP0231790	ACM Advanced Plus 600 HR 1 Year	Order from Parts
ACP0231820	ACM Advanced Plus 900 HR 1 Year	Order from Parts
ACP0231850	ACM Advanced Plus 1200 HR 1 Year	Order from Parts
ACP0231880	ACM Advanced Plus 1600 HR 1 Year	Order from Parts
ACP0231910	ACM Advanced Plus 2000 HR 1 Year	Order from Parts
ACM SUBSCRIPTIONS - CANADA		
ACP0231940	ACM Standard Plus 600 HR 1 Year	Order from Parts
ACP0231990	ACM Standard Plus 900 HR 1 Year	Order from Parts
ACP0232040	ACM Standard Plus 1200 HR 1 Year	Order from Parts
ACP0232090	ACM Standard Plus 1600 HR 1 Year	Order from Parts
ACP0232140	ACM Standard Plus 2000 HR 1 Year	Order from Parts
ACP0232540	ACM Advanced Plus 300 HR 1 Year	Order from Parts
ACP0232590	ACM Advanced Plus 600 HR 1 Year	Order from Parts
ACP0232640	ACM Advanced Plus 900 HR 1 Year	Order from Parts
ACP0232690	ACM Advanced Plus 1200 HR 1 Year	Order from Parts
ACP0232740	ACM Advanced Plus 1600 HR 1 Year	Order from Parts
ACP0232790	ACM Advanced Plus 2000 HR 1 Year	Order from Parts

Standard Plus - Base Machine Information, Geo-Fence, Curfew, Service Alerts, Subscription Alerts, Threshold Alerts for Available Parameters

Advanced - All Information Included in Standard Plus Subscription, Maximum of 30 CAN Parameters (Dependent on Hardware)

RESERVED

STATE OF MICHIGAN
CENTRAL PROCUREMENT SERVICES
Department of Technology, Management, and Budget
525 W. ALLEGAN ST., LANSING, MICHIGAN 48913
P.O. BOX 30026 LANSING, MICHIGAN 48909

CONTRACT CHANGE NOTICE

Change Notice Number **1**

to

Contract Number **071B7700094**

CONTRACTOR	
	AGCO CORPORATION
	4205 River Green Parkway
	Duluth, GA 30096
	Korey Maryland
	770-232-8244
	korey.maryland@agcocorp.com
	CV0136275

STATE			
	Program Manager	Scott Poyer	SW
		517-284-6448	
		poyers@Michigan.gov	
	Contract Administrator	Yvon Dufour	DTMB
		(517) 249-0455	
		dufoury@michigan.gov	

CONTRACT SUMMARY

AGRICULTURAL, GROUNDS & MAINTENANCE EQUIPMENT PURC

INITIAL EFFECTIVE DATE	INITIAL EXPIRATION DATE	INITIAL AVAILABLE OPTIONS	EXPIRATION DATE BEFORE
January 13, 2017	January 12, 2021	2 - 1 Year	January 12, 2021

PAYMENT TERMS	DELIVERY TIMEFRAME

ALTERNATE PAYMENT OPTIONS			EXTENDED PURCHASING	
☐ P-Card	☐ PRC	☐ Other	☒ Yes	☐ No

MINIMUM DELIVERY REQUIREMENTS

DESCRIPTION OF CHANGE NOTICE

OPTION	LENGTH OF OPTION	EXTENSION	LENGTH OF EXTENSION	REVISED EXP. DATE
☒	2 years	☐		January 12, 2023

CURRENT VALUE	VALUE OF CHANGE NOTICE	ESTIMATED AGGREGATE CONTRACT VALUE
$300,000.00	$0.00	$300,000.00

DESCRIPTION

Effective 11/16/2020, the first and second option years available on this contract are hereby exercised. The revised contract expiration date is 1/12/2023. All other terms, conditions, specifications and pricing remain the same. Per agency request, and DTMB Procurement approval.

STATE OF MICHIGAN
ENTERPRISE PROCUREMENT

Department of Technology, Management & Budget
525 W. Allegan Street Lansing, MI 48933
P.O. Box 30026 Lansing, MI 48909

NOTICE OF CONTRACT

NOTICE OF CONTRACT NO. **071B7700094**
between
THE STATE OF MICHIGAN
and

CONTRACTOR	
	AGCO Corporation
	4205 River Green Parkway
	Duluth, GA 30096
	Korey Maryland
	770-232-8244
	Korey.maryland@agcocorp.com
	*****0019

STATE			
	Program Manager	Scott Poyer	MDOT
		517-284-6448	
		poyers@michigan.gov	
	Contract Administrator	Yvon Dufour	DTMB
		517-284-6996	
		dufoury@michigan.gov	

CONTRACT SUMMARY			
DESCRIPTION: Agricultural, Grounds, & Maintenance Equipment PURCHASE.			
INITIAL EFFECTIVE DATE	**INITIAL EXPIRATION DATE**	**INITIAL AVAILABLE OPTIONS**	**EXPIRATION DATE BEFORE CHANGE(S) NOTED BELOW**
1/13/2017	1/12/2021	2, one year	
PAYMENT TERMS		**DELIVERY TIMEFRAME**	
45 Days		14 to 120 days (150 day max)	
ALTERNATE PAYMENT OPTIONS			**EXTENDED PURCHASING**
☐ P-card ☐ Direct Voucher (DV) ☐ Other			☒ Yes ☐ No
MINIMUM DELIVERY REQUIREMENTS			
MISCELLANEOUS INFORMATION			
ESTIMATED CONTRACT VALUE AT TIME OF EXECUTION			**$300,000.00**

FOR THE CONTRACTOR:

AGCO Corporation
Company Name

Authorized Agent Signature

Authorized Agent **(Print or Type)**

Date

FOR THE STATE:

Signature

Name & Title

Agency

Date

STATE OF MICHIGAN

STANDARD CONTRACT TERMS

This STANDARD CONTRACT ("**Contract**") is agreed to between the State of Michigan (the "**State**") and AGCO ("**Contractor**"), a Delaware Corporation. This Contract is effective on January 13, 2017 ("**Effective Date**"), and unless terminated, expires on January 12, 2021.

This Contract may be renewed for up to two (2) additional one (1) year period(s). Renewal is at the sole discretion of the State and will automatically extend the Term of this Contract. The State will document its exercise of renewal options via Contract Change Notice.

The parties agree as follows:

1. **Duties of Contractor.** Contractor must perform the services and provide the deliverables described in **Schedule A – Statement of Work** (the "**Contract Activities**"). An obligation to provide delivery of any commodity is considered a service and is a Contract Activity.

   Contractor must furnish all labor, equipment, materials, and supplies necessary for the performance of the Contract Activities, and meet operational standards, unless otherwise specified in Schedule A.

   Contractor must: (a) perform the Contract Activities in a timely, professional, safe, and workmanlike manner consistent with standards in the trade, profession, or industry; (b) meet or exceed the performance and operational standards, and specifications of the Contract; (c) provide all Contract Activities in good quality, with no material defects; (d) not interfere with the State's operations; (e) obtain and maintain all necessary licenses, permits or other authorizations necessary for the performance of the Contract; (f) cooperate with the State, including the State's quality assurance personnel, and any third party to achieve the objectives of the Contract; (g) return to the State any State-furnished equipment or other resources in the same condition as when provided when no longer required for the Contract; (h) not make any media releases without prior written authorization from the State; (i) assign to the State any claims resulting from state or federal antitrust violations to the extent that those violations concern materials or services supplied by third parties toward fulfillment of the Contract; (j) comply with all State physical and IT security policies and standards which will be made available upon request; and (k) provide the State priority in performance of the Contract except as mandated by federal disaster response requirements. Any breach under this paragraph is considered a material breach.

   Contractor must also be clearly identifiable while on State property by wearing identification issued by the State, and clearly identify themselves whenever making contact with the State.

2. **Notices.** All notices and other communications required or permitted under this Contract must be in writing and will be considered given and received: (a) when verified by written receipt if sent by courier; (b) when actually received if sent by mail without verification of receipt; or (c) when verified by automated receipt or electronic logs if sent by facsimile or email.

If to State:	If to Contractor:
Yvon Dufour *525 W. Allegan,* *Constitution Hall, 1st Floor NE* *Lansing, MI 48933* *dufoury@michigan.gov* *(517) 284-6996*	Korey Maryland - Government Sales Manager 4205 River Green Parkway Duluth, GA 30096 770-232-8244 korey.maryland@agcocorp.com

3. **Contract Administrator.** The Contract Administrator for each party is the only person authorized to modify any terms of this Contract, and approve and execute any change under this Contract (each a "**Contract Administrator**"):

State:	Contractor:
Yvon Dufour *525 W. Allegan,* *Constitution Hall, 1st Floor NE* *Lansing, MI 48933* *dufoury@michigan.gov* *(517) 284-6996*	Korey Maryland - Government Sales Manager 4205 River Green Parkway Duluth, GA 30096 770-232-8244 korey.maryland@agcocorp.com

4. **Program Manager.** The Program Manager for each party will monitor and coordinate the day-to-day activities of the Contract (each a "**Program Manager**"):

State:	Contractor:
Scott Poyer *poyers@michigan.gov* *(517) 284-6448*	Korey Maryland - Government Sales Manager 4205 River Green Parkway Duluth, GA 30096 770-232-8244 korey.maryland@agcocorp.com

5. **Performance Guarantee**. Contractor must at all times have financial resources sufficient, in the opinion of the State, to ensure performance of the Contract and must provide proof upon request. The State may require a performance bond (as specified in Schedule A) if, in the opinion of the State, it will ensure performance of the Contract.

6. **Insurance Requirements.** Contractor must maintain the insurances identified below and is responsible for all deductibles. All required insurance must: (a) protect the State from claims that may arise out of, are alleged to arise out of, or result from Contractor's or a subcontractor's performance; (b) be primary and non-contributing to any comparable liability insurance (including self-insurance) carried by the State; and (c) be provided by a company with an A.M. Best rating of "A" or better, and a financial size of VII or better.

Required Limits	Additional Requirements
Commercial General Liability Insurance	
Minimal Limits: $1,000,000 Each Occurrence Limit $1,000,000 Personal & Advertising Injury Limit $2,000,000 General Aggregate Limit $2,000,000 Products/Completed Operations Deductible Maximum: $50,000 Each Occurrence	Contractor must have their policy endorsed to add "the State of Michigan, its departments, divisions, agencies, offices, commissions, officers, employees, and agents" as additional insureds using endorsement CG 20 10 11 85, or both CG 2010 07 04 and CG 2037 07 0.
Umbrella or Excess Liability Insurance	
Minimal Limits: $5,000,000 General Aggregate	Contractor must have their policy endorsed to add "the State of Michigan, its departments, divisions, agencies, offices, commissions, officers, employees, and agents" as additional insureds.
Automobile Liability Insurance	
Minimal Limits: $1,000,000 Per Occurrence	Contractor must have their policy: (1) endorsed to add "the State of Michigan, its departments, divisions, agencies, offices,

	commissions, officers, employees, and agents" as additional insureds; and (2) include Hired and Non-Owned Automobile coverage.
Workers' Compensation Insurance	
Minimal Limits: Coverage according to applicable laws governing work activities.	Waiver of subrogation, except where waiver is prohibited by law.
Employers Liability Insurance	
Minimal Limits: $500,000 Each Accident $500,000 Each Employee by Disease $500,000 Aggregate Disease.	

If any of the required policies provide **claims-made** coverage, the Contractor must: (a) provide coverage with a retroactive date before the effective date of the contract or the beginning of Contract Activities; (b) maintain coverage and provide evidence of coverage for at least three (3) years after completion of the Contract Activities; and (c) if coverage is canceled or not renewed, and not replaced with another claims-made policy form with a retroactive date prior to the contract effective date, Contractor must purchase extended reporting coverage for a minimum of three (3) years after completion of work.

Contractor must: (a) provide insurance certificates to the Contract Administrator, containing the agreement or purchase order number, at Contract formation and within 20 calendar days of the expiration date of the applicable policies; (b) require that subcontractors maintain the required insurances contained in this Section; (c) notify the Contract Administrator within 5 business days if any insurance is cancelled; and (d) waive all rights against the State for damages covered by insurance. Failure to maintain the required insurance does not limit this waiver.

This Section is not intended to and is not be construed in any manner as waiving, restricting or limiting the liability of either party for any obligations under this Contract (including any provisions hereof requiring Contractor to indemnify, defend and hold harmless the State).

7. **Administrative Fee and Reporting.** Contractor must pay an administrative fee of 2% on all payments made to Contractor under the Contract including transactions with the State (including its departments, divisions, agencies, offices, and commissions), MiDEAL members, and other states (including governmental subdivisions and authorized entities). Administrative fee payments must be made by check payable to the State of Michigan and mailed to:

Department of Technology, Management and Budget
Cashiering
P.O. Box 30681
Lansing, MI 48909

Contractor must submit an itemized purchasing activity report, which includes at a minimum, the name of the purchasing entity and the total dollar volume in sales. Reports should be mailed to DTMB-Procurement.

The administrative fee and purchasing activity report are due within 30 calendar days from the last day of each calendar quarter.

8. **Extended Purchasing Program.** This contract is extended to MiDEAL members. MiDEAL members include local units of government, school districts, universities, community colleges, and nonprofit hospitals. A current list of MiDEAL members is available at www.michigan.gov/mideal. Upon written agreement between the State and Contractor, this contract may also be extended to: (a) State of Michigan employees and (b) other states (including governmental subdivisions and authorized entities).

If extended, Contractor must supply all Contract Activities at the established Contract prices and terms. The State reserves the right to impose an administrative fee and negotiate additional discounts based on any increased volume generated by such extensions.

Contractor must submit invoices to, and receive payment from, extended purchasing program members on a direct and individual basis.

9. **Independent Contractor.** Contractor is an independent contractor and assumes all rights, obligations and liabilities set forth in this Contract. Contractor, its employees, and agents will not be considered employees of the State. No partnership or joint venture relationship is created by virtue of this Contract. Contractor, and not the State, is responsible for the payment of wages, benefits and taxes of Contractor's employees and any subcontractors. Prior performance does not modify Contractor's status as an independent contractor.

10. **Subcontracting.** Contractor may not delegate any of its obligations under the Contract without the prior written approval of the State. Contractor must notify the State at least 90 calendar days before the proposed delegation, and provide the State any information it requests to determine whether the delegation is in its best interest. If approved, Contractor must: (a) be the sole point of contact regarding all contractual matters, including payment and charges for all Contract Activities; (b) make all payments to the subcontractor; and (c) incorporate the terms and conditions contained in this Contract in any subcontract with a subcontractor. Contractor remains responsible for the completion of the Contract Activities, compliance with the terms of this Contract, and the acts and omissions of the subcontractor. The State, in its sole discretion, may require the replacement of any subcontractor.

11. **Staffing.** The State's Contract Administrator may require Contractor to remove or reassign personnel by providing a notice to Contractor.

12. **Background Checks.** Upon request, Contractor must perform background checks on all employees and subcontractors and its employees prior to their assignment. The scope is at the discretion of the State and documentation must be provided as requested. Contractor is responsible for all costs associated with the requested background checks. The State, in its sole discretion, may also perform background checks.

13. **Assignment.** Contractor may not assign this Contract to any other party without the prior approval of the State. Upon notice to Contractor, the State, in its sole discretion, may assign in whole or in part, its rights or responsibilities under this Contract to any other party. If the State determines that a novation of the Contract to a third party is necessary, Contractor will agree to the novation and provide all necessary documentation and signatures.

14. **Change of Control.** Contractor will notify, at least 90 calendar days before the effective date, the State of a change in Contractor's organizational structure or ownership. For purposes of this Contract, a change in control means any of the following: (a) a sale of more than 50% of Contractor's stock; (b) a sale of substantially all of Contractor's assets; (c) a change in a majority of Contractor's board members; (d) consummation of a merger or consolidation of Contractor with any other entity; (e) a change in ownership through a transaction or series of transactions; (f) or the board (or the stockholders) approves a plan of complete liquidation. A change of control does not include any consolidation or merger effected exclusively to change the domicile of Contractor, or any transaction or series of transactions principally for bona fide equity financing purposes.

    In the event of a change of control, Contractor must require the successor to assume this Contract and all of its obligations under this Contract.

15. **Ordering.** Contractor is not authorized to begin performance until receipt of authorization as identified in Schedule A.

16. **Acceptance.** Contract Activities are subject to inspection and testing by the State within 30 calendar days of the State's receipt of them ("**State Review Period**"), unless otherwise provided in Schedule A. If the Contract Activities are not fully accepted by the State, the State will notify Contractor by the end of the State Review Period that either: (a) the Contract Activities are accepted, but noted deficiencies must be corrected; or (b) the Contract Activities are rejected. If the State finds material deficiencies, it may: (i)

reject the Contract Activities without performing any further inspections; (ii) demand performance at no additional cost; or (iii) terminate this Contract in accordance with Section 23, Termination for Cause.

Within 10 business days from the date of Contractor's receipt of notification of acceptance with deficiencies or rejection of any Contract Activities, Contractor must cure, at no additional cost, the deficiency and deliver unequivocally acceptable Contract Activities to the State. If acceptance with deficiencies or rejection of the Contract Activities impacts the content or delivery of other non-completed Contract Activities, the parties' respective Program Managers must determine an agreed to number of days for re-submission that minimizes the overall impact to the Contract. However, nothing herein affects, alters, or relieves Contractor of its obligations to correct deficiencies in accordance with the time response standards set forth in this Contract.

If Contractor is unable or refuses to correct the deficiency within the time response standards set forth in this Contract, the State may cancel the order in whole or in part. The State, or a third party identified by the State, may perform the Contract Activities and recover the difference between the cost to cure and the Contract price plus an additional 10% administrative fee.

17. **Delivery.** Contractor must deliver all Contract Activities F.O.B. destination, within the State premises with transportation and handling charges paid by Contractor, unless otherwise specified in Schedule A. All containers and packaging becomes the State's exclusive property upon acceptance.

18. **Risk of Loss and Title.** Until final acceptance, title and risk of loss or damage to Contract Activities remains with Contractor. Contractor is responsible for filing, processing, and collecting all damage claims. The State will record and report to Contractor any evidence of visible damage. If the State rejects the Contract Activities, Contractor must remove them from the premises within 10 calendar days after notification of rejection. The risk of loss of rejected or non-conforming Contract Activities remains with Contractor. Rejected Contract Activities not removed by Contractor within 10 calendar days will be deemed abandoned by Contractor, and the State will have the right to dispose of it as its own property. Contractor must reimburse the State for costs and expenses incurred in storing or effecting removal or disposition of rejected Contract Activities.

19. **Warranty Period**. The warranty period, if applicable, for Contract Activities is a fixed period commencing on the date specified in Schedule A. If the Contract Activities do not function as warranted during the warranty period the State may return such non-conforming Contract Activities to the Contractor for a full refund.

20. **Terms of Payment.** Invoices must conform to the requirements communicated from time-to-time by the State. All undisputed amounts are payable within 45 days of the State's receipt. Contractor may only charge for Contract Activities performed as specified in Schedule A. Invoices must include an itemized statement of all charges. The State is exempt from State sales tax for direct purchases and may be exempt from federal excise tax, if Services purchased under this Agreement are for the State's exclusive use. Notwithstanding the foregoing, all prices are inclusive of taxes, and Contractor is responsible for all sales, use and excise taxes, and any other similar taxes, duties and charges of any kind imposed by any federal, state, or local governmental entity on any amounts payable by the State under this Contract.

    The State has the right to withhold payment of any disputed amounts until the parties agree as to the validity of the disputed amount. The State will notify Contractor of any dispute within a reasonable time. Payment by the State will not constitute a waiver of any rights as to Contractor's continuing obligations, including claims for deficiencies or substandard Contract Activities. Contractor's acceptance of final payment by the State constitutes a waiver of all claims by Contractor against the State for payment under this Contract, other than those claims previously filed in writing on a timely basis and still disputed.

    The State will only disburse payments under this Contract through Electronic Funds Transfer (EFT). Contractor must register with the State at http://www.michigan.gov/cpexpress to receive electronic fund transfer payments. If Contractor does not register, the State is not liable for failure to provide payment. Without prejudice to any other right or remedy it may have, the State reserves the right to set off at any time any amount then due and owing to it by Contractor against any amount payable by the State to Contractor under this Contract.

21. **Liquidated Damages.** Liquidated damages, if applicable, will be assessed as described in Schedule A.

22. **Stop Work Order.** The State may suspend any or all activities under the Contract at any time. The State will provide Contractor a written stop work order detailing the suspension. Contractor must comply with the stop work order upon receipt. Within 90 calendar days, or any longer period agreed to by Contractor, the State will either: (a) issue a notice authorizing Contractor to resume work, or (b) terminate the Contract or purchase order. The State will not pay for Contract Activities, Contractor's lost profits, or any additional compensation during a stop work period.

23. **Termination for Cause.** The State may terminate this Contract for cause, in whole or in part, if Contractor, as determined by the State: (a) endangers the value, integrity, or security of any location, data, or personnel; (b) becomes insolvent, petitions for bankruptcy court proceedings, or has an involuntary bankruptcy proceeding filed against it by any creditor; (c) engages in any conduct that may expose the State to liability; (d) breaches any of its material duties or obligations; or (e) fails to cure a breach within the time stated in a notice of breach. Any reference to specific breaches being material breaches within this Contract will not be construed to mean that other breaches are not material.

    If the State terminates this Contract under this Section, the State will issue a termination notice specifying whether Contractor must: (a) cease performance immediately, or (b) continue to perform for a specified period. If it is later determined that Contractor was not in breach of the Contract, the termination will be deemed to have been a Termination for Convenience, effective as of the same date, and the rights and obligations of the parties will be limited to those provided in Section 24, Termination for Convenience.

    The State will only pay for amounts due to Contractor for Contract Activities accepted by the State on or before the date of termination, subject to the State's right to set off any amounts owed by the Contractor for the State's reasonable costs in terminating this Contract. The Contractor must pay all reasonable costs incurred by the State in terminating this Contract for cause, including administrative costs, attorneys' fees, court costs, transition costs, and any costs the State incurs to procure the Contract Activities from other sources.

24. **Termination for Convenience.** The State may immediately terminate this Contract in whole or in part without penalty and for any reason, including but not limited to, appropriation or budget shortfalls. The termination notice will specify whether Contractor must: (a) cease performance of the Contract Activities immediately, or (b) continue to perform the Contract Activities in accordance with Section 25, Transition Responsibilities. If the State terminates this Contract for convenience, the State will pay all reasonable costs, as determined by the State, for State approved Transition Responsibilities.

25. **Transition Responsibilities.** Upon termination or expiration of this Contract for any reason, Contractor must, for a period of time specified by the State (not to exceed 120 calendar days), provide all reasonable transition assistance requested by the State, to allow for the expired or terminated portion of the Contract Activities to continue without interruption or adverse effect, and to facilitate the orderly transfer of such Contract Activities to the State or its designees. Such transition assistance may include, but is not limited to: (a) continuing to perform the Contract Activities at the established Contract rates; (b) taking all reasonable and necessary measures to transition performance of the work, including all applicable Contract Activities, training, equipment, software, leases, reports and other documentation, to the State or the State's designee; (c) taking all necessary and appropriate steps, or such other action as the State may direct, to preserve, maintain, protect, or return to the State all materials, data, property, and confidential information provided directly or indirectly to Contractor by any entity, agent, vendor, or employee of the State; (d) transferring title in and delivering to the State, at the State's discretion, all completed or partially completed deliverables prepared under this Contract as of the Contract termination date; and (e) preparing an accurate accounting from which the State and Contractor may reconcile all outstanding accounts (collectively, "**Transition Responsibilities**"). This Contract will automatically be extended through the end of the transition period.

26. **General Indemnification.** Contractor must defend, indemnify and hold the State, its departments, divisions, agencies, offices, commissions, officers, and employees harmless, without limitation, from and against any and all actions, claims, losses, liabilities, damages, costs, attorney fees, and expenses (including those required to establish the right to indemnification), arising out of or relating to: (a) any breach by Contractor (or any of Contractor's employees, agents, subcontractors, or by anyone else for whose acts any of them may be liable) of any of the promises, agreements, representations, warranties, or insurance requirements contained in this Contract; (b) any infringement, misappropriation, or other violation of any intellectual property right or other right of any third party; (c) any bodily injury, death, or damage to real or tangible personal property occurring wholly or in part due to action or inaction by

Contractor (or any of Contractor's employees, agents, subcontractors, or by anyone else for whose acts any of them may be liable); and (d) any acts or omissions of Contractor (or any of Contractor's employees, agents, subcontractors, or by anyone else for whose acts any of them may be liable).

The State will notify Contractor in writing if indemnification is sought; however, failure to do so will not relieve Contractor, except to the extent that Contractor is materially prejudiced. Contractor must, to the satisfaction of the State, demonstrate its financial ability to carry out these obligations.

The State is entitled to: (i) regular updates on proceeding status; (ii) participate in the defense of the proceeding; (iii) employ its own counsel; and to (iv) retain control of the defense if the State deems necessary. Contractor will not, without the State's written consent (not to be unreasonably withheld), settle, compromise, or consent to the entry of any judgment in or otherwise seek to terminate any claim, action, or proceeding. To the extent that any State employee, official, or law may be involved or challenged, the State may, at its own expense, control the defense of that portion of the claim.

Any litigation activity on behalf of the State, or any of its subdivisions under this Section, must be coordinated with the Department of Attorney General. An attorney designated to represent the State may not do so until approved by the Michigan Attorney General and appointed as a Special Assistant Attorney General.

27. **Infringement Remedies.** If, in either party's opinion, any piece of equipment, software, commodity, or service supplied by Contractor or its subcontractors, or its operation, use or reproduction, is likely to become the subject of a copyright, patent, trademark, or trade secret infringement claim, Contractor must, at its expense: (a) procure for the State the right to continue using the equipment, software, commodity, or service, or if this option is not reasonably available to Contractor, (b) replace or modify the same so that it becomes non-infringing; or (c) accept its return by the State with appropriate credits to the State against Contractor's charges and reimburse the State for any losses or costs incurred as a consequence of the State ceasing its use and returning it.

28. **Limitation of Liability.** The State is not liable for consequential, incidental, indirect, or special damages, regardless of the nature of the action.

29. **Disclosure of Litigation, or Other Proceeding.** Contractor must notify the State within 14 calendar days of receiving notice of any litigation, investigation, arbitration, or other proceeding (collectively, "**Proceeding**") involving Contractor, a subcontractor, or an officer or director of Contractor or subcontractor, that arises during the term of the Contract, including: (a) a criminal Proceeding; (b) a parole or probation Proceeding; (c) a Proceeding under the Sarbanes-Oxley Act; (d) a civil Proceeding involving: (1) a claim that might reasonably be expected to adversely affect Contractor's viability or financial stability; or (2) a governmental or public entity's claim or written allegation of fraud; or (e) a Proceeding involving any license that Contractor is required to possess in order to perform under this Contract.

30. **Reserved.**

31. **Reserved.**

32. **Non-Disclosure of Confidential Information**. The parties acknowledge that each party may be exposed to or acquire communication or data of the other party that is confidential, privileged communication not intended to be disclosed to third parties. The provisions of this Section survive the termination of this Contract.

    a. Meaning of Confidential Information. For the purposes of this Contract, the term "**Confidential Information**" means all information and documentation of a party that: (a) has been marked "confidential" or with words of similar meaning, at the time of disclosure by such party; (b) if disclosed orally or not marked "confidential" or with words of similar meaning, was subsequently summarized in writing by the disclosing party and marked "confidential" or with words of similar meaning; and, (c) should reasonably be recognized as confidential information of the disclosing party. The term "Confidential Information" does not include any information or documentation that was: (a) subject to disclosure under the Michigan Freedom of Information Act (FOIA); (b) already in the possession of the receiving party without an obligation of confidentiality; (c) developed independently by the receiving party, as demonstrated by the receiving party, without violating the disclosing party's proprietary rights; (d) obtained from a source other than the

disclosing party without an obligation of confidentiality; or, (e) publicly available when received, or thereafter became publicly available (other than through any unauthorized disclosure by, through, or on behalf of, the receiving party). For purposes of this Contract, in all cases and for all matters, State Data is deemed to be Confidential Information.

b. Obligation of Confidentiality. The parties agree to hold all Confidential Information in strict confidence and not to copy, reproduce, sell, transfer, or otherwise dispose of, give or disclose such Confidential Information to third parties other than employees, agents, or subcontractors of a party who have a need to know in connection with this Contract or to use such Confidential Information for any purposes whatsoever other than the performance of this Contract. The parties agree to advise and require their respective employees, agents, and subcontractors of their obligations to keep all Confidential Information confidential. Disclosure to a subcontractor is permissible where: (a) use of a subcontractor is authorized under this Contract; (b) the disclosure is necessary or otherwise naturally occurs in connection with work that is within the subcontractor's responsibilities; and (c) Contractor obligates the subcontractor in a written contract to maintain the State's Confidential Information in confidence. At the State's request, any employee of Contractor or any subcontractor may be required to execute a separate agreement to be bound by the provisions of this Section.

c. Cooperation to Prevent Disclosure of Confidential Information. Each party must use its best efforts to assist the other party in identifying and preventing any unauthorized use or disclosure of any Confidential Information. Without limiting the foregoing, each party must advise the other party immediately in the event either party learns or has reason to believe that any person who has had access to Confidential Information has violated or intends to violate the terms of this Contract and each party will cooperate with the other party in seeking injunctive or other equitable relief against any such person.

d. Remedies for Breach of Obligation of Confidentiality. Each party acknowledges that breach of its obligation of confidentiality may give rise to irreparable injury to the other party, which damage may be inadequately compensable in the form of monetary damages. Accordingly, a party may seek and obtain injunctive relief against the breach or threatened breach of the foregoing undertakings, in addition to any other legal remedies which may be available, to include, in the case of the State, at the sole election of the State, the immediate termination, without liability to the State, of this Contract or any Statement of Work corresponding to the breach or threatened breach.

e. Surrender of Confidential Information upon Termination. Upon termination of this Contract or a Statement of Work, in whole or in part, each party must, within 5 calendar days from the date of termination, return to the other party any and all Confidential Information received from the other party, or created or received by a party on behalf of the other party, which are in such party's possession, custody, or control; provided, however, that Contractor must return State Data to the State following the timeframe and procedure described further in this Contract. Should Contractor or the State determine that the return of any Confidential Information is not feasible, such party must destroy the Confidential Information and must certify the same in writing within 5 calendar days from the date of termination to the other party. However, the State's legal ability to destroy Contractor data may be restricted by its retention and disposal schedule, in which case Contractor's Confidential Information will be destroyed after the retention period expires.

33. **Reserved.**

34. **Reserved.**

35. **Reserved.**

36. **Records Maintenance, Inspection, Examination, and Audit.** The State or its designee may audit Contractor to verify compliance with this Contract. Contractor must retain, and provide to the State or its designee and the auditor general upon request, all financial and accounting records related to the Contract through the term of the Contract and for 4 years after the latter of termination, expiration, or final payment under this Contract or any extension ("**Audit Period**"). If an audit, litigation, or other action involving the records is initiated before the end of the Audit Period, Contractor must retain the records until all issues are resolved.

Within 10 calendar days of providing notice, the State and its authorized representatives or designees have the right to enter and inspect Contractor's premises or any other places where Contract Activities are being performed, and examine, copy, and audit all records related to this Contract. Contractor must cooperate and provide reasonable assistance. If any financial errors are revealed, the amount in error must be reflected as a credit or debit on subsequent invoices until the amount is paid or refunded. Any remaining balance at the end of the Contract must be paid or refunded within 45 calendar days.

This Section applies to Contractor, any parent, affiliate, or subsidiary organization of Contractor, and any subcontractor that performs Contract Activities in connection with this Contract.

37. **Warranties and Representations.** Contractor represents and warrants: (a) Contractor is the owner or licensee of any Contract Activities that it licenses, sells, or develops and Contractor has the rights necessary to convey title, ownership rights, or licensed use; (b) all Contract Activities are delivered free from any security interest, lien, or encumbrance and will continue in that respect; (c) the Contract Activities will not infringe the patent, trademark, copyright, trade secret, or other proprietary rights of any third party; (d) Contractor must assign or otherwise transfer to the State or its designee any manufacturer's warranty for the Contract Activities; (e) the Contract Activities are merchantable and fit for the specific purposes identified in the Contract; (f) the Contract signatory has the authority to enter into this Contract; (g) all information furnished by Contractor in connection with the Contract fairly and accurately represents Contractor's business, properties, finances, and operations as of the dates covered by the information, and Contractor will inform the State of any material adverse changes; and (h) all information furnished and representations made in connection with the award of this Contract is true, accurate, and complete, and contains no false statements or omits any fact that would make the information misleading. A breach of this Section is considered a material breach of this Contract, which entitles the State to terminate this Contract under Section 23, Termination for Cause.

38. **Conflicts and Ethics.** Contractor will uphold high ethical standards and is prohibited from: (a) holding or acquiring an interest that would conflict with this Contract; (b) doing anything that creates an appearance of impropriety with respect to the award or performance of the Contract; (c) attempting to influence or appearing to influence any State employee by the direct or indirect offer of anything of value; or (d) paying or agreeing to pay any person, other than employees and consultants working for Contractor, any consideration contingent upon the award of the Contract. Contractor must immediately notify the State of any violation or potential violation of these standards. This Section applies to Contractor, any parent, affiliate, or subsidiary organization of Contractor, and any subcontractor that performs Contract Activities in connection with this Contract.

39. **Compliance with Laws.** Contractor must comply with all federal, state and local laws, rules and regulations.

40. **Reserved.**

41. **Reserved.**

42. **Nondiscrimination.** Under the Elliott-Larsen Civil Rights Act, 1976 PA 453, MCL 37.2101, *et seq*., and the Persons with Disabilities Civil Rights Act, 1976 PA 220, MCL 37.1101, *et seq*., Contractor and its subcontractors agree not to discriminate against an employee or applicant for employment with respect to hire, tenure, terms, conditions, or privileges of employment, or a matter directly or indirectly related to employment, because of race, color, religion, national origin, age, sex, height, weight, marital status, or mental or physical disability. Breach of this covenant is a material breach of this Contract.

43. **Unfair Labor Practice.** Under MCL 423.324, the State may void any Contract with a Contractor or subcontractor who appears on the Unfair Labor Practice register compiled under MCL 423.322.

44. **Governing Law.** This Contract is governed, construed, and enforced in accordance with Michigan law, excluding choice-of-law principles, and all claims relating to or arising out of this Contract are governed by Michigan law, excluding choice-of-law principles. Any dispute arising from this Contract must be resolved in Michigan Court of Claims. Contractor consents to venue in Ingham County, and waives any objections, such as lack of personal jurisdiction or *forum non conveniens*. Contractor must appoint agents in Michigan to receive service of process.

45. **Non-Exclusivity.** Nothing contained in this Contract is intended nor will be construed as creating any requirements contract with Contractor. This Contract does not restrict the State or its agencies from acquiring similar, equal, or like Contract Activities from other sources.

46. **Force Majeure.** Neither party will be in breach of this Contract because of any failure arising from any disaster or acts of god that are beyond their control and without their fault or negligence. Each party will use commercially reasonable efforts to resume performance. Contractor will not be relieved of a breach or delay caused by its subcontractors. If immediate performance is necessary to ensure public health and safety, the State may immediately contract with a third party.

47. **Dispute Resolution.** The parties will endeavor to resolve any Contract dispute in accordance with this provision. The dispute will be referred to the parties' respective Contract Administrators or Program Managers. Such referral must include a description of the issues and all supporting documentation. The parties must submit the dispute to a senior executive if unable to resolve the dispute within 15 business days. The parties will continue performing while a dispute is being resolved, unless the dispute precludes performance. A dispute involving payment does not preclude performance.

    Litigation to resolve the dispute will not be instituted until after the dispute has been elevated to the parties' senior executive and either concludes that resolution is unlikely, or fails to respond within 15 business days. The parties are not prohibited from instituting formal proceedings: (a) to avoid the expiration of statute of limitations period; (b) to preserve a superior position with respect to creditors; or (c) where a party makes a determination that a temporary restraining order or other injunctive relief is the only adequate remedy. This Section does not limit the State's right to terminate the Contract.

48. **Media Releases.** News releases (including promotional literature and commercial advertisements) pertaining to the Contract or project to which it relates must not be made without prior written State approval, and then only in accordance with the explicit written instructions of the State.

49. **Website Incorporation.** The State is not bound by any content on Contractor's website unless expressly incorporated directly into this Contract.

50. **Entire Agreement and Order of Precedence.** This Contract, which includes Schedule A – Statement of Work, and expressly incorporated schedules and exhibits, is the entire agreement of the parties related to the Contract Activities. This Contract supersedes and replaces all previous understandings and agreements between the parties for the Contract Activities. If there is a conflict between documents, the order of precedence is: (a) first, this Contract, excluding its schedules, exhibits, and Schedule A – Statement of Work; (b) second, Schedule A – Statement of Work as of the Effective Date; and (c) third, schedules expressly incorporated into this Contract as of the Effective Date. NO TERMS ON CONTRACTOR'S INVOICES, ORDERING DOCUMENTS, WEBSITE, BROWSE-WRAP, SHRINK-WRAP, CLICK-WRAP, CLICK-THROUGH OR OTHER NON-NEGOTIATED TERMS AND CONDITIONS PROVIDED WITH ANY OF THE CONTRACT ACTIVITIES WILL CONSTITUTE A PART OR AMENDMENT OF THIS CONTRACT OR IS BINDING ON THE STATE FOR ANY PURPOSE. ALL SUCH OTHER TERMS AND CONDITIONS HAVE NO FORCE AND EFFECT AND ARE DEEMED REJECTED BY THE STATE, EVEN IF ACCESS TO OR USE OF THE CONTRACT ACTIVITIES REQUIRES AFFIRMATIVE ACCEPTANCE OF SUCH TERMS AND CONDITIONS.

51. **Severability.** If any part of this Contract is held invalid or unenforceable, by any court of competent jurisdiction, that part will be deemed deleted from this Contract and the severed part will be replaced by agreed upon language that achieves the same or similar objectives. The remaining Contract will continue in full force and effect.

52. **Waiver.** Failure to enforce any provision of this Contract will not constitute a waiver.

53. **Survival.** The provisions of this Contract that impose continuing obligations, including warranties and representations, termination, transition, insurance coverage, indemnification, and confidentiality, will survive the expiration or termination of this Contract.

54. **Contract Modification.** This Contract may not be amended except by signed agreement between the parties (a "**Contract Change Notice**"). Notwithstanding the foregoing, no subsequent Statement of Work or Contract Change Notice executed after the Effective Date will be construed to amend this Contract unless it specifically states its intent to do so and cites the section or sections amended.

STATE OF MICHIGAN

Contract No. 071B7700094
Agricultural, Grounds, Turf, Earth Moving, and Roadside Maintenance Equipment

SCHEDULE A
STATEMENT OF WORK
CONTRACT ACTIVITIES

This schedule identifies the requirements of this Contract.

This contract includes equipment for PURCHASE.

The Contractor must provide deliverables, including the staffing to accomplish all service incidentals necessary to complete the work, as set forth in this contract.

REQUIREMENT
SCOPE OF WORK
1.1 Specifications **The Contractor must provide the following Equipment for purchase per Schedule B, Specifications:** **FOR PURCHASE** **Awarded:** **23. C05-0901.16 Roadside Tractor** **Not Awarded:** **25. C05-1001-16 Tractor Lawn Mower 2 Wheel steer**

A. EQUIPMENT FOR PURCHASE

1. Warranties

Contractor shall provide a one (1) year warranty on parts and labor or the manufacturer's warranty, whichever is greater.

The Sate shall contact the dealer for all warranty issues. The State shall provide serial number, and purchase date. The delivering dealer shall perform all warranty work.

The State reserves the right to require additional warranties.

2. Recall Requirements and Procedures

The Contractor shall notify the State and/or the ordering entity within 48 hours of a recall notice.

3. Service Levels

3.1 Time Frames

a) All Contract Activities must be delivered within **120** calendar days from receipt of order. The receipt of order date is pursuant to Section 2, Notice provisions of the Standard Contract Terms.

3.2 Delivery

Delivery will be expected within **120** calendar days (agricultural equipment is within 60 – 180 Days) for special orders and out of stock items, upon date of order. Delivery will be made to the requested location and shall be F.O.B. Delivered or charged on a mileage rate or a one-time charge by Region per **Schedule F1 - Pricing.**

F.O.B. dealership Items

Prices shall be quoted "F.O.B. Dealership" with transportation charges prepaid to the primary Contractor location on all orders for State of Michigan and Extended Purchasing Participants. Contractors must also quote a delivery cost per **Schedule F1 – Pricing**, to facilitate calculation of delivery cost to various locations within Michigan. The delivery cost per **Schedule F1 – Pricing,** will be added to the equipment price quoted to determine the "Total Price" for "F.O.B. Dealership" items. Mileage will be calculated based upon the "Official Michigan Department of Transportation Highway Map". Other F.O.B. terms will not be accepted. The State reserves the right to make their own shipping arrangements.

Freight Charges - Should an Agency order items that are below the minimum order requirement of the Contract, or should a Contractor quote F.O.B. Shipping Point on one-time purchases, the Contractor should choose the most economically advantageous carrier and must be approved by the using agency.

United Parcel Service (UPS) must be used in instances where the weight of the shipment is less than 150 lbs., or where shipments could be separated into smaller parcels such as three (3) 50 lb. packages.

If the Contractor fails to follow these shipping instructions, the State shall pay the shipping costs on the Contractor's invoice, minus the difference for the amount that was charged and the amount that would have been charged if the requested carrier had been used. The State reserves the right to arrange their own freight.

3.3 Training

The Contractor must provide the following training:

a) A comprehensive orientation training shall be provided at delivery or at an alternate time requested by the State. The training shall include equipment operation, maintenance, and inspection practices.

b) Upon request, the Contractor shall provide 8 hours of mechanics and operators training for up to eight (8) employees. The training is to be held at each ship to address. The Contractor shall provide unit pricing for training in **Schedule F1, Pricing.**

B. *GENERAL REQUIREMENTS*

1.1 Incentives

a) Trade-In Policy – Trade-ins are allowed at the discretion of the dealers.

b) Multi-Unit Discounts – All units must be ordered collectively on one (1) purchase order:

- 3 – 4 units 1% Discount
- 5 + units 2% Discount

Multi-Unit Discount terms:

- Sales of 3 or more like products sold on the same purchase order are eligible for the multi-unit discount.
- Compatible implements sold with such machines will also qualify but do not count as a unit.

2.1 Technical Support and Repairs

When providing technical support, the Call Center must resolve the caller's issue within **30** minutes. If the caller's issue cannot be resolved within **2** hours, on-site service must be scheduled. The on-site service must be performed within **36** hours of the time the issue was scheduled for service.

2.2 Reporting

The Contractor must submit, to the Contract Administrator or their designee, the following written reports(if applicable):

a) *Maintenance/service report*
b) *Regional rental report*
c) *Regional purchase report*

By the second Friday of every December, the Contractor must submit a report of recycled content in commodities sold in that calendar year to **the Contract Administrator or Designee**.

2.3 Meetings

The Contractor must attend the following meetings:

Kick-off meeting within 30 calendar days of the Effective Date.

The State may request other meetings, as it deems appropriate.

3. Staffing

3.1 Contractor Representative

The Contractor must appoint a Product Representative, specifically assigned to State of Michigan accounts, that will respond to State inquiries regarding the Contract Activities, answering questions related to ordering and delivery, etc. (the "Contractor Representative").

AGCO Corporation
Donna Hendrix - Government National Account Supervisor
4205 River Green Parkway
Duluth, GA 30096-2568 USA
Tel:+1 770-232-8274 or 770-813-6194
Fax:+1 877-339-9255
Cell:+1 678-895-9422
donna.hendrix@agcocorp.com

The Contractor must notify the Contract Administrator at least **30** calendar days before removing or assigning a new Contractor Representative.

3.2 Customer Service Toll-Free Number

The Contractor must specify its toll-free number for the State to make contact with the Contractor Representative. The Contractor Representative must be available for calls during the hours of 8 am to 5 pm EST.

AGCO Corporation 800-972-2426 or 866-230-2316

3.3 Technical Support, Repairs and Maintenance

The Contractor must specify its toll-free number for the State to make contact with the Contractor for technical support, repairs, and maintenance. The Contractor must be available for calls and service during the hours of 8 am to 5 pm EST.

Technical support is provided by the Contractor's dealers. Agencies may contact their preferred Massey Ferguson dealer for technical support. Please see the enclosed list of Massey Ferguson dealers per **Schedule C – Dealer List**.

3.4 Disclosure of Subcontractors

If the Contractor intends to utilize subcontractors, the Contractor must disclose the following:

- **a)** The legal business name; address; telephone number; a description of subcontractor's organization and the services it will provide; and information concerning subcontractor's ability to provide the Contract Activities.
- **b)** The relationship of the subcontractor to the Contractor.
- **c)** Whether the Contractor has a previous working experience with the subcontractor. If yes, provide the details of that previous relationship.
- **d)** A complete description of the Contract Activities that will be performed or provided by the subcontractor.

2.5 Security

The Contractor's staff may be required to make deliveries to, or enter State facilities. The Contractor must:

- **a)** Provide a valid picture ID.
- **b)** Wear proper dealership uniform.
- **c)** The names of the drivers shall be communicated prior to delivery along with destination time.

4. Pricing

4.1 Price Term

a) Pricing is firm for a 365 day period ("Pricing Period"). The first pricing period begins on the Effective Date. Adjustments may be requested, in writing, by either party and will take effect no earlier than the next Pricing Period. The State reserves the right to adjust the pricing period and allow automatic updates with limitations.

Pricing on all items listed in **Schedule B, Specifications** (or approved alternates) shall be firm-fixed. All remaining items within Contractor's **"catalog"** shall be available at a firm-fixed discount. All **"catalog"** pricing must be published and available at all times via website access, and/or electronic/printed price pages. Price quotes issued from the Contractor to the State must be verifiable via published pricing. The State reserves the right to limit "catalog" items at any time for any reason. It is expected the Contractor's Catalog items shall provide the best prices available to the State at all times and be firm-fixed. The State may remove items from the "Catalog" at any time without cause.

4.2 Price Changes

- **a)** Adjustments will be based on changes in actual Contractor costs. Any request must be supported by written evidence documenting the change in costs. The State may consider sources, such as the Consumer Price Index; Producer Price Index; other pricing indices as needed; economic and industry data; manufacturer or supplier letters noting the increase in pricing; and any other data the State deems relevant.
- **b)** Following the presentation of supporting documentation, both parties will have 30 days to review the information and prepare a written response. If the review reveals no need for modifications, pricing will remain unchanged unless mutually agreed to by the parties. If the review reveals that changes are needed, both parties will negotiate such changes, for no longer than 30 days, unless extended by mutual agreement.
- **c)** The Contractor remains responsible for Contract Activities at the current price for all orders received before the mutual execution of a Change Notice indicating the start date of the new Pricing Period.

5. Ordering

5.1 Authorizing Document

The appropriate authorizing document for the Contract will be a purchase order.

5.2 Order Verification

The Contractor must have internal controls, to verify abnormal orders and to ensure that only authorized individuals place orders.

6. Acceptance
6.1 Acceptance, Inspection and Testing

The State will use the following criteria to determine acceptance of the Contract Activities:

a) Purchased equipment shall be delivered in new condition. Damaged equipment will not be accepted. The Contractor will repair or replace the damaged equipment at the Contractor's expense.

b) The Contractor shall provide documentation upon delivery that provides itemized deliverables.

c) Acceptance is not complete for partial deliveries until final deliverables are received.

6.2 Final Acceptance

a) The Contractor shall deliver the equipment. The State, or their designee, shall inspect the equipment and approve acceptance of goods upon delivery.

All set-up and/or training and orientation shall be completed.

7. Invoice and Payment
7.1 Invoice Requirements

All invoices submited to the State must include: (a) date; (b) purchase order; (c) quantity; (d) itemized description of the Contract Activities; (e) unit price; (f) shipping cost (if any); (g) total price; and (h) contract number.

8. Payment Methods

The State will make payment for Contract Activities by EFT as outlined in section 20 of Standard Contract Terms.

9. Additional Requirements
9.1 Environmental and Energy Efficient Products

Contractor must include any relevant third-party certification, including the verification of a United States department of agriculture certified bio based product label.

The Contractor shall identify any energy efficient, bio-based, or otherwise environmental friendly products used in their products to the Program Manager (PM) 2 weeks prior to delivery.

9.2 Recycled Content and Recyclability Deliverable(s).

Without compromising performance or quality, the State prefers Deliverable(s) containing higher percentages of recycled materials. The Contractor must indicate an estimate of the percentage of recycled materials, if any, contained in each Deliverable:

- (total estimated percentage of recovered material)
- (estimated percentage of post-consumer material)
- (estimated percentage of post-industrial waste)

9.3 Hazardous Chemical Identification

In accordance with the federal Emergency Planning and Community Right-to-Know Act, 42 USC 11001, *et seq.*, as amended, the Contractor must provide a Safety Data Sheet (SDS) listing any hazardous chemicals, as defined in 40 CFR §370.2, to be delivered. Each hazardous chemical must be properly identified, including any applicable identification number, such as a National Stock Number or Special Item Number.
The Contractor must identify any hazardous chemicals that will be provided under any resulting contract.

The Contractor shall provide all current SDS to the Program Manager (PM) 2 weeks prior to delivery.

9.4 Mercury Content

Pursuant to MCL 18.1261d, mercury-free products must be procured when possible. The Contractor must explain if it intends to provide products containing mercury, the amount or concentration of mercury, and whether cost competitive alternatives exist. If a cost competitive alternative does exist, the Contractor must provide justification as to why the particular product is essential. All products containing mercury must be labeled as containing mercury.

The Contractor shall report if it intends to provide products containing mercury to the Program Manager (PM) no later than 48 hours after a purchase order is issued.

9.5 Brominated Flame Retardants

The State prefers to purchase products that do not contain brominated flame retardants (BFRs) whenever possible. The Contractor must disclose whether the products contain BFRs.

The Contractor must disclose to the Program Manager (PM) whether their products contain BFRs no later than 48 hours after a purchase order is issued.

9.6 Key Personnel

The Contractor must appoint one individual(s) who will be directly responsible for the day to day operations of the Contract ("Key Personnel"). Key Personnel must be specifically assigned to the State account, be knowledgeable on the contractual requirements, and respond to State inquires within 8 hours.

***Korey Maryland**
Governmental Sales Manager
(Account Maintenance, EFT, quarterly reporting, general questions)
4205 River Green Parkway
Duluth, GA, 30096
Tel 770-232-8244 Cell 404-216-2509
korey.maryland@agcocorp.com

John Hallett
National Accounts Manager
(Pricing and technical assistance)
4205 River Green Parkway
Duluth, GA, 30096
Tel 770-813-6150 Cell 419-902-1599
John.hallett@agcocorp.com

Daniel Mearkle
Nationals Accounts Manager
(Specification questions and technical assistance)
4205 River Green Parkway
Duluth, GA, 30096
Tel 770-232-8076 Cell 717-370-1858
Daniel.mearkle@agcocorp.com

Donna Hendrix
National Accounts Administrator
(Assist with customer service related issues. Order tracking, inventory management, delivery questions, etc.)
4205 River Green Parkway
Duluth, GA, 30096
Tel 770-232-8274 Cell 678-895-9422
Donna.hendrix@agcocorp.com

The Contractor may not remove or assign Key Personnel without the prior consent of the State. Prior consent is not required for reassignment for reasons beyond the Contractor's control, including illness, disability, death, leave of absence, personal emergency circumstances, resignation, or termination for cause. The State may request a résumé and conduct an interview before approving a change. The State may require a 30 calendar day training period for replacement personnel.

9.8 Organizational Chart

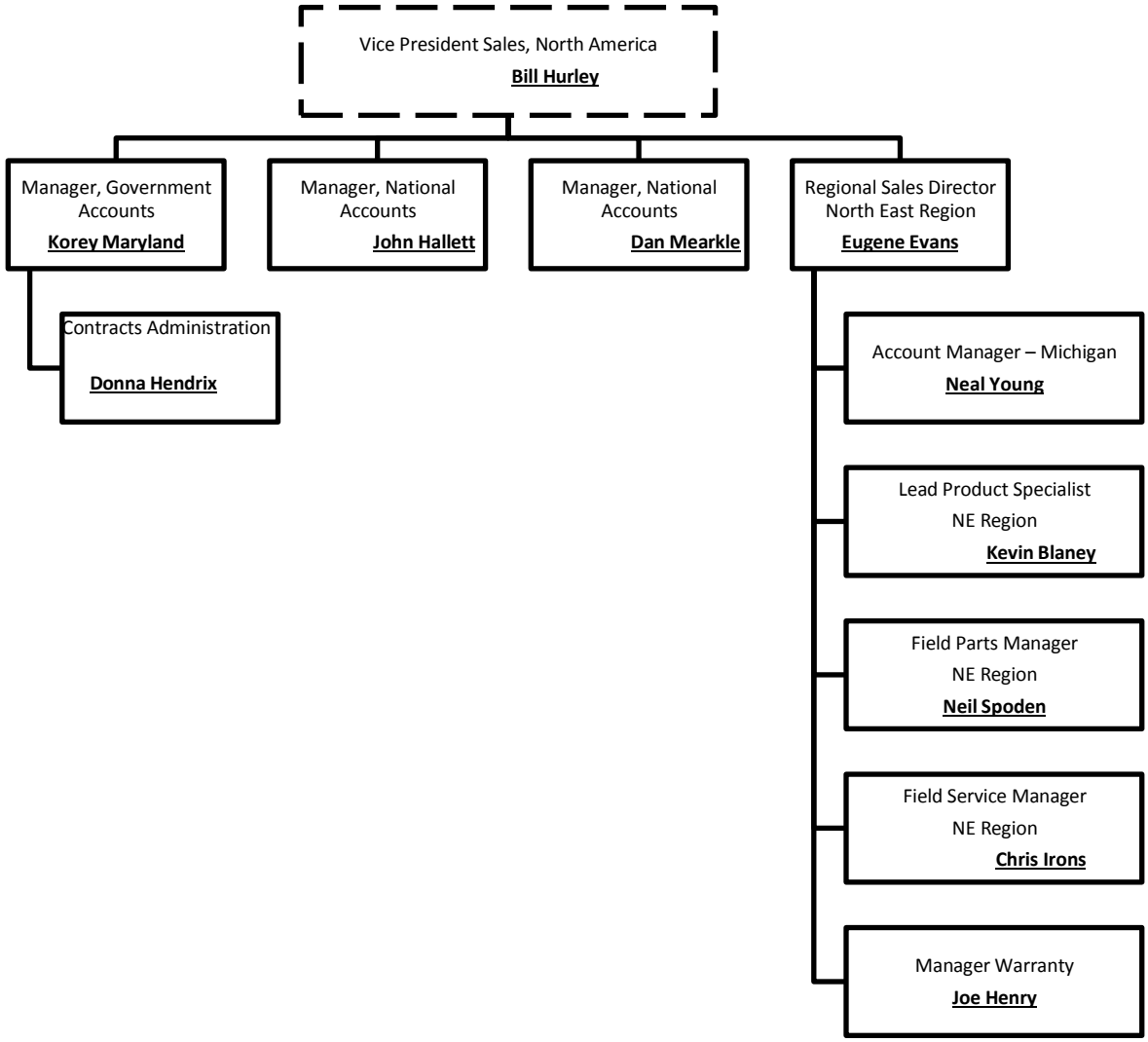

10. Invoice Credits

Late or improper completion of the Contract Activities will cause loss and damage to the State and Extending Purchasing Participants and it would be impracticable and extremely difficult to fix the actual damage sustained by the State and/or Extending Purchasing Participants. Therefore, if there is late or improper completion of the Contract Activities, the State, and the Ordering Entity are entitled to collect invoice credits in the amount of $2/10^{th}$ of 1% of the Purchase Order for each day the Contractor fails to remedy the late or improper completion of the Work.

STATE OF MICHIGAN

Contract No. 071B7700094

Agricultural, Grounds, Turf, Earth Moving, and Roadside Maintenance Equipment

SCHEDULE B
SPECIFICATIONS

Equipment - Purchase	
SPEC SECTION	
23	**C05-0901-16 Tractor Road Side**
25	**C05-1001-16 Tractor Lawn Mower 2 Wheel steer**

23. - Specification # C05-0901.16		
ROADSIDE TRACTOR - Reference John Deere 5100E		
1.1	Engine shall be John Deere power tech 4045 diesel, rated at 100hp @ 2400 rpm per ISO 97/68/ EC hp	AGCO Power 33AWFC, rated 99hp at 2,200 RPM
1.2	Engine shall be 4cyl, 276 cu in. with turbocharger	3 cyl, 201 cu in, turbo
1.3	Engine shall have wet sleeve liners	Yes
1.4	Engine lubrication shall be pressurized	Yes
1.5	Engine oil filter shall be spin on, full flow type	Yes
1.6	Engine shall be liquid cooled	Yes
1.7	Engine shall have air to air after cooler	Yes
1.8	Engine shall have an oil cooler	Yes
1.9	Tractor shall be equipped with a neutral start switch and an electronic fuel shut off	Yes
1.10	Fuel capacity shall be 25 gallons minimum	27.7 gal
1.11	Key start switch shall be provided	Yes
1.12	Tractor shall have a dry type air filter with dual- element with a restriction indicator light on the dash.	Yes
1.13	Fuel filter shall be a single-element with a hand primer and a water-sediment bowel	Yes
1.14	Engine shall be able to run on biodiesel up to 20% concentration, to meet ASTMPS 121 or DIN 51606 specifications	Meets ASTM D 6751
1.15	Engine shall meet EPA standards for FT4 emission regulations	Yes
1.16	Tractor shall have an LCD instrument cluster which shows engine hours, power take-off (PTO) speed, ground speed, hi-lo indicator, forward, neutral and reverse, all visible at the same time. Light out indicator for trailer lights, turn signals, and hazard light bulbs	Does not have hi-low , forward, neutral, reverse and light out indicators
1.17	Provide indicators, gauges, or lights for the following:	Yes
1.18	a. Engine oil pressure	Yes
1.19	b. Fuel level	Yes
1.20	Charging system and batteries that will be suitable for the tractor application	Yes
1.21	Lights shall include: two halogen head lights, two forward and two rear rollover protective structure (ROPS)-mounted turn signal lights, two ROPS-mounted rear tail lights, one mounted ROPS-mounted rear work light	4 halogen head lights, fender mounted turn signal and tail lights. 1 ROPS mounted rear work light, 2 mid mount work lights
1.22	Tractor shall have a PTO hp of 85 @ 2400 per SAE hp	87 PTO Hp @ 2,200 RPM
1.23	Tractor shall a PTO speed of 540 RPM, and the option to up grade to 540/1000 rpm speed	540/1000
1.24	Tractor shall have a electrohydraulic PTO actuation	Yes
1.25	Tractor shall have a standard transmission with 12 forward/ 12 reverse, with power reverser	12X12 Power Shuttle
1.26	Tractor shall have a wet type clutch	Yes
1.27	Hydraulics shall be an open center design	Yes

1.28	Hydraulic pump shall have a capacity of 22.5 Gallon per minute(GPM)	24.3 GPM
1.29	Hydraulics shall have a rated flow @ one selected control valve (SCV) of 15.9 GPM	17.7 GPM
1.30	Hydraulics shall have a maximum operating pressure of 2900 psi	2,900 PSI
1.31	Maximum hydraulic power shall be 26.9 hp for a single scv	29.9 HP ((2900*17.7)/1714)
1.32	Hitch draft control loads sense shall be mechanical type	Yes
1.33	Hitch shall be a category 2 (SAE designation)	Yes
1.34	Hitch lift capacity @ 24 in. behind lift points will be 3213 lb	4,850 lb @ 24 in.
1.35	Hitch shall have top link sensing	Yes
1.36	Final drive shall be inboard planetary type	Yes
1.37	Final drive shall have a mechanical (pedal) with engage on the go rear differential lock	Engaged with electro-hydraulic rocker switch
1.38	Final drive shall have flanged axle type	Yes
1.39	Final drive shall have hydraulic wet disc brakes	Yes
1.40	Operators station shall have a rollover protection system(ROPS) on the open operators station(OOS)	Yes
1.41	ROPS shall be foldable two post design	Yes
1.42	Seat suspension system shall be mechanical	Yes
1.43	Tractor shall have a mechanical four wheel drive system(MFWD)	Yes
1.44	Turning radius w/ brakes 11.6 ft	Unavailable
1.45	Turning radius w/o brakes 14.3 ft	16.25 ft
1.46	Tractor shall have limited slip differential	Yes
1.47	Front tires 12.4-24 R1	13.6R24 R1
1.48	Rear tires 18.4-30 R1	Yes
1.49	Paint shall be manufacturer's standard color	Yes
1.50	Safety meets ANSI standard	Yes
1.51	Warranty	Yes
1.52	1- Parts manual	Available upon request
1.53	1- Service manual	Available upon request
1.54	1- Safety & training video	N/a
Make Offered:		**Massey Ferguson**
Model Offered:		**MF4710 (DLXE PKG)**

23. - Specification # C05-0901.16		
ROADSIDE TRACTOR - Reference John Deere 5100E		
1.1	Engine shall be John Deere power tech 4045 diesel, rated at 100hp @ 2400 rpm per ISO 97/68/ EC hp	AGCO Power 44AWFC, rated 105hp at 2,200 RPM
1.2	Engine shall be 4cyl, 276 cu in. with turbocharger	4 cyl, 269 cu in, turbo
1.3	Engine shall have wet sleeve liners	Yes
1.4	Engine lubrication shall be pressurized	Yes
1.5	Engine oil filter shall be spin on, full flow type	Yes
1.6	Engine shall be liquid cooled	Yes
1.7	Engine shall have air to air after cooler	Yes
1.8	Engine shall have an oil cooler	Yes
1.9	Tractor shall be equipped with a neutral start switch and an electronic fuel shut off	Yes
1.10	Fuel capacity shall be 25 gallons minimum	38 gal
1.11	Key start switch shall be provided	Yes
1.12	Tractor shall have a dry type air filter with dual- element with a restriction indicator light on the dash.	Yes
1.13	Fuel filter shall be a single-element with a hand primer and a water-sediment bowel	Yes
1.14	Engine shall be able to run on biodiesel up to 20% concentration, to meet ASTMPS 121 or DIN 51606 specifications	Meets ASTM D 6751

1.15	Engine shall meet EPA standards for FT4 emission regulations	Yes
1.16	Tractor shall have an LCD instrument cluster which shows engine hours, power take-off (PTO) speed, ground speed, hi-lo indicator, forward, neutral and reverse, all visible at the same time. Light out indicator for trailer lights, turn signals, and hazard light bulbs	Does not have hi-low , forward, neutral, reverse and light out indicators
1.17	Provide indicators, gauges, or lights for the following:	Yes
1.18	a. Engine oil pressure	Yes
1.19	b. Fuel level	Yes
1.20	Charging system and batteries that will be suitable for the tractor application	Yes
1.21	Lights shall include: two halogen head lights, two forward and two rear rollover protective structure (ROPS)-mounted turn signal lights, two ROPS-mounted rear tail lights, one mounted ROPS-mounted rear work light	4 halogen head lights, fender mounted turn signal and tail lights. 1 ROPS mounted rear work light, 2 mid mount work lights
1.22	Tractor shall have a PTO hp of 85 @ 2400 per SAE hp	92 PTO Hp @ 2,200 RPM
1.23	Tractor shall a PTO speed of 540 RPM, and the option to up grade to 540/1000 rpm speed	540/540E/1000 Deluxe pktg
1.24	Tractor shall have a electrohydraulic PTO actuation	Yes
1.25	Tractor shall have a standard transmission with 12 forward/ 12 reverse, with power reverser	12X12 Power Shuttle
1.26	Tractor shall have a wet type clutch	Yes
1.27	Hydraulics shall be an open center design	Yes
1.28	Hydraulic pump shall have a capacity of 22.5 Gallon per minute(GPM)	26 GPM
1.29	Hydraulics shall have a rated flow @ one selected control valve (SCV) of 15.9 GPM	17.7 GPM
1.30	Hydraulics shall have a maximum operating pressure of 2900 psi	2,900 PSI
1.31	Maximum hydraulic power shall be 26.9 hp for a single scv	29.9 HP ((2900*17.7)/1714)
1.32	Hitch draft control loads sense shall be mechanical type	Yes
1.33	Hitch shall be a category 2 (SAE designation)	Yes
1.34	Hitch lift capacity @ 24 in. behind lift points will be 3213 lb	7,716 lb @ 24 in.
1.35	Hitch shall have top link sensing	Yes
1.36	Final drive shall be inboard planetary type	Yes
1.37	Final drive shall have a mechanical (pedal) with engage on the go rear differential lock	Engaged with electro-hydraulic rocker switch
1.38	Final drive shall have flanged axle type	Yes
1.39	Final drive shall have hydraulic wet disc brakes	Yes
1.40	Operators station shall have a rollover protection system(ROPS) on the open operators station(OOS)	Yes
1.41	ROPS shall be foldable two post design	Yes
1.42	Seat suspension system shall be mechanical	Yes
1.43	Tractor shall have a mechanical four wheel drive system(MFWD)	Yes
1.44	Turning radius w/ brakes 11.6 ft	Unvailable
1.45	Turning radius w/o brakes 14.3 ft	17.5 ft
1.46	Tractor shall have limited slip differential	Yes
1.47	Front tires 12.4-24 R1	13.6R24 R1
1.48	Rear tires 18.4-30 R1	Yes
1.49	Paint shall be manufacturer's standard color	Yes
1.50	Safety meets ANSI standard	Yes
1.51	Warranty	Yes
1.52	1- Parts manual	Available upon request
1.53	1- Service manual	Available upon request
1.54	1- Safety & training video	N/a
Make Offered:		**Massey Ferguson**
Model Offered:		**MF5711 (DLXE PKG)**

25. - Specification # C05-1001.16		
TRACTOR/LAWN MOWER TWO WHEEL STEER - Reference John Deere X500/48X		
1.1	Engine shall be gasoline, rated at 24SAE horse power minimum	3 Cyl T4F diesel @ 22.5 engine HP
1.2	Engine shall have overhead valves	Yes
1.3	V twin with cast iron liners	inline 3 cyl with parent bore
1.4	Engine lubrication shall be pressurized	Yes
1.5	Engine oil filter shall be spin on, full flow type	Yes
1.6	Air cooled engine	Liquid cooled
1.7	Engine shall have mechanical governor	Yes
1.8	Air cleaner shall be dry type, replaceable with foam pre cleaner	Replaceable paper element filter
1.9	Choke speed controls, separate levers	N/A
1.10	Fuel capacity shall be 4.4 gallons minimum	6.6 Gal
1.11	Key start switch shall be provided	Yes
1.12	Electrical system shall be 12volt	Yes
1.13	Batteries 12 v 500 CCA	12 volt, 390 CCA @ 0 degrees F.
1.14	Charging System, Flywheel alternator, regulated, 15 amp	40 amp alternator
1.15	Lights shall include: Head lights	Yes
1.16	Provide indicators, gauges, or lights for the following:	Yes
	a. Engine hour meter	Yes
	b. Engine oil pressure	Yes
	c. Fuel level	Yes
1.17	Steering shall be manual two wheel steer	Hydrostatic power steering
1.18	Front axle shall be cast iron	Yes
1.19	Spindle bushings, metal replaceable	N/A
1.20	Turning radius 22 in.	94.5 in
1.21	Transaxle shall be hydrostatic integrated with transmission	Yes
1.22	Oil cooler, fins and fans on trans axle	N/A
1.23	Oil filter internal not replaceable	N/A
1.24	Rear axle shall have differential locking system	Yes
1.25	Forward speed 0 - 7.2 mph	0 - 8.9 mph
1.26	Reverse Speed 0 - 5.2 mph	0 - 6.7 mph
1.27	Brakes shall be internal wet disk	Yes
1.28	Front tires shall be 16 x 6.5-8 Turf	18x18.5-10 Turf
1.29	Rear tires shall be 24x12-12 Turf	26x12-12 Turf
1.30	Seat, open - back design with grasp	closed back design
1.31	Seat back height 15 in.	Unavailable
1.32	Seat fore - aft adjustment while seated, 7 in.	Unavailable
1.33	Seat suspension two coil springs , three position no - tools adjustment for operators weight	coil spring
1.34	Lift system type foot pedal	Deck lift controlled with 3pt hitch lever
1.35	Mower cut height 13 positions, 1 - 4 in.	7 positions on deck wheels, 1.2 -4.7 in.
1.36	Cut height increments 0.25 in.	Infinite adjustment
1.37	Preset cut height	adjustable
1.38	Mower attachment type slide under tractor	Yes
1.39	Front draft arms attached with spring pins at two points	spring loaded lever with locking pin
1.40	Rear draft arms quick - pull pins	two spring loaded pins
1.41	Drive system dual belts	PTO shaft drive to deck
1.42	Mower deck side discharge	Yes
1.43	Mower cutting width 48 in.	54"
1.44	Construction stamped steel deck shell	Yes
1.45	Mower deck material 11 gauge, 0.120 in.	10 gauge
1.46	Mower drive system in line belt	V-belt

1.47	Mower wheels 4	Yes
1.48	Mower wheel adjustment seven - position, spring- loaded pin	5 position - pin/clip
1.49	Mower level adjustment exact adjust ports and onboard deck leveling gauge	N/A
1.50	Paint shall be manufacturer's standard color	Yes
1.51	Safety meets ANSI standard	Yes
1.52	Meets Outdoor Power Equipment Institute (OPEI) standard	Unavailable
1.53	Back up protection reverse implement option	N/A
1.54	Warranty 4 year / 500 hour bumper to bumper	Yes
1.55	1- Parts manual	Available upon request
1.56	1- Service manual	Available upon request
1.57	1- Safety & training video	N/a
Make Offered:		**Massey Ferguson**
Model Offered:		**GC1705 w/ MF2320 54" deck**

Michigan Massey Ferguson Dealers

SCHEDULE C

Michigan Service Delivery Region	Dealer	Address	City	State	ZIP	Phone	Principal	Email
#1c	Skinner's Garage Inc.	4142 Pleasant Ave	Pickford	MI	49774	(906) 647-5655	Denny Skinner	skinnersinc450@centurytel.net
#2	Gillison's Variety Fabrication, Inc.	3033 Benzie Hwy	Benzonia	MI	49616	(231) 882-5921	Ron Gillison	rgillison@gillisons.com
#4	Gillison's Variety Fabrication, Inc.	3860 W. Monroe Road	Hart	MI	49421	(231) 873-0143	Ron Gillison	rgillison@gillisons.com
#4	Pell's Farm Service	9542 W 48th St	Fremont	MI	49412	(231) 924-2510	Matt Pell	matt@pellsinc.com
#4	Farm Depot	2690 S. State Rd	Ionia	MI	48846	(616) 522-5501	Mike Laethem	mike@farmdepot.biz
#5	Card Brother' s Equipment	12296 West Brady Rd	Chesaning	MI	48616	(989) 845-7370	Kevin Card	kevin@cardbrothers.com
#5	Nagy's Tractor Sales	1980 W. US 23	Omer	MI	48749	(989) 653-3173	Dan Nagy	dannagy@centurytel.net
#6	Dick Coulter Inc	6672 Lake Pleasant Road	North Branch	MI	48461	(810) 688-3082	Roger Blumerich	rlblumerich@yahoo.com
#6	Heindl Implement Sales	1140 W Vassar Rd	Reese	MI	48757	(989) 868-4149	Brian Hiser	heindlimplement@hotmail.com
#6	Farm Depot	275 Columbia Street	Caro	MI	48723	(989) 673-6172	Mike Laethem	mike@farmdepot.biz
#7	Williams' Farm Machinery Inc	1115 Lansing St	Charlotte	MI	48813	(517) 543-4770	Bill Simon	williamsfarm@sbcglobal.net
#8	Farm Depot	12661 US 131	Schoolcraft	MI	49087	(269) 679-3939	Mike Laethem	mike@farmdepot.biz
#9	Diuble Equipment Inc.	4365 S. Parker Road	Ann Arbor	MI	48103	(734) 994-1313	Ron Diuble	rdiuble@aol.com
#10	Van Paemel's Equipment Co.	75357 North Avenue	Armada	MI	48005	(586) 784-5295	Bob Van Paemel	vanpaemel@comcast.net
#10	North Center Farm Supply	75075 North Road	Armada	MI	48005	(586) 784-5331	Paul Theut	northcenterfarm@sbcglobal.net
Wisconsin Massey Ferguson Dealer								
#1a	Swiderski Equipment, Inc. of Antigo	N 4660 Hwy. 45	Antigo	WI	54409	(715) 623-4668	Mike Witzeling	mikewitzeling@swiderskiequipment.com

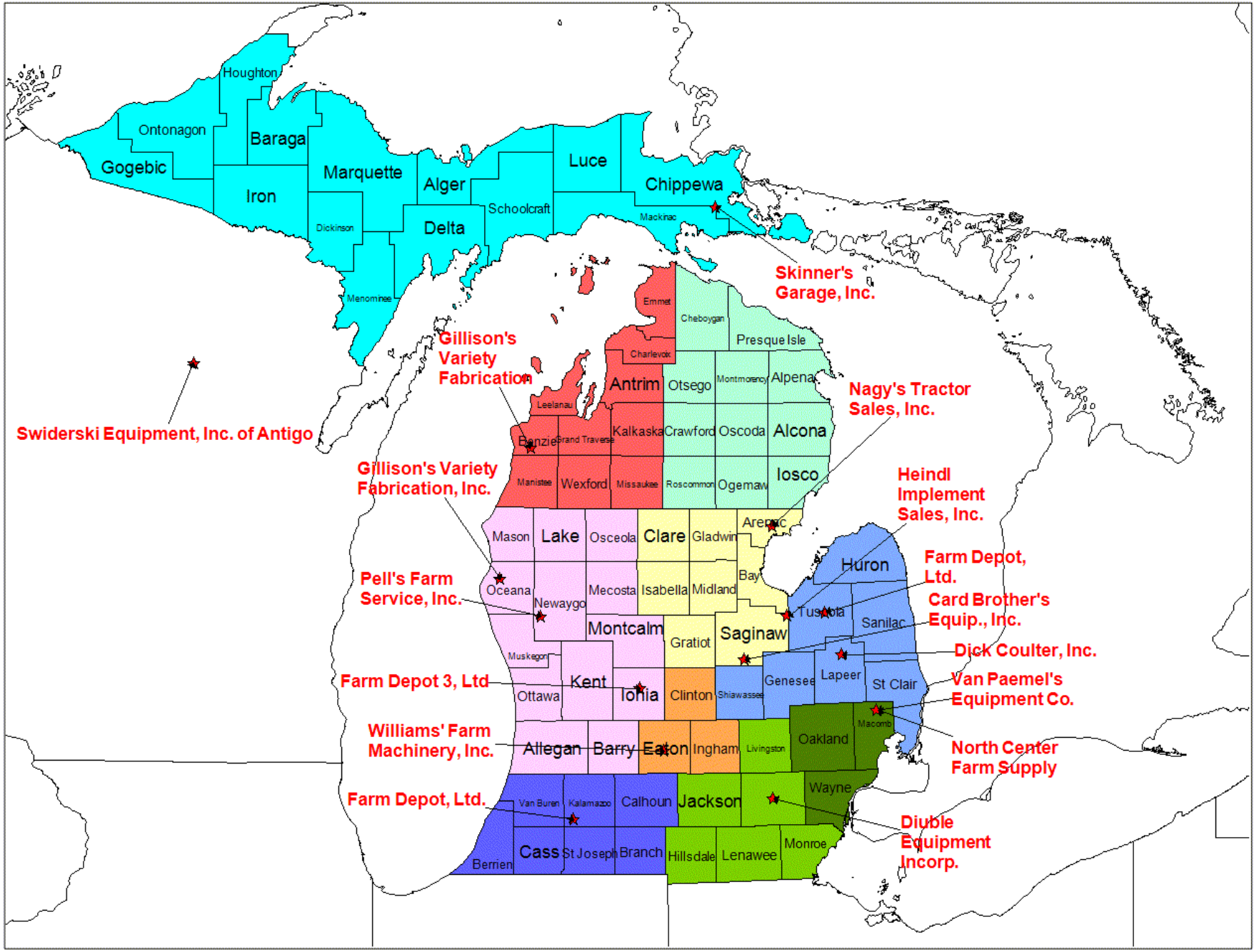
Houghton
Ontonagon
Baraga
Gogebic
Marquette
Iron
Alger
Luce
Chippewa
Schoolcraft
Mackinac
Dickinson
Delta
Menominee
Emmet
Cheboygan
Presque Isle
Charlevoix
Antrim
Otsego
Montmorency
Alpena
Leelanau
Kalkaska
Crawford
Oscoda
Alcona
Benzie
Grand Traverse
Manistee
Wexford
Missaukee
Roscommon
Ogemaw
Iosco
Arenac
Mason
Lake
Osceola
Clare
Gladwin
Bay
Huron
Oceana
Newaygo
Mecosta
Isabella
Midland
Tuscola
Sanilac
Montcalm
Gratiot
Saginaw
Muskegon
Kent
Ottawa
Ionia
Clinton
Shiawassee
Genesee
Lapeer
St Clair
Macomb
Allegan
Barry
Eaton
Ingham
Livingston
Oakland
Wayne
Van Buren
Kalamazoo
Calhoun
Jackson
Berrien
Cass
St Joseph
Branch
Hillsdale
Lenawee
Monroe
Skinner's Garage, Inc.
Gillison's Variety Fabrication
Swiderski Equipment, Inc. of Antigo
Nagy's Tractor Sales, Inc.
Gillison's Variety Fabrication, Inc.
Heindl Implement Sales, Inc.
Farm Depot, Ltd.
Pell's Farm Service, Inc.
Card Brother's Equip., Inc.
Dick Coulter, Inc.
Farm Depot 3, Ltd
Van Paemel's Equipment Co.
Williams' Farm Machinery, Inc.
North Center Farm Supply
Farm Depot, Ltd.
Diuble Equipment Incorp.

MASSEY FERGUSON

Compact, Utility and Mid-Range Tractors

MASSEY FERGUSON

Compact, Utility and Mid-Range Tractors

FROM MASSEY FERGUSON

A world of experience. Working with you.

TOUGH. VERSATILE. DEPENDABLE. OUR TRACTORS HA

It's a fact. You can find well-used Massey Ferguson® tractors on farms everywhere. Classic beauties with more than a few hours on them, still getting the job done, day after day, season after season. These decades-old machines are proven symbols of Massey Ferguson's commitment to durability, reliability and good old-fashioned toughness. And like land itself, they're often handed down from generation to generation.

Today, we're reinventing what compact, utility and mid-range tractors can be and redefining what they can do. Read on to learn about our three distinct categories of performance that combine the right features and options to best meet your needs, and get any job done. Massey Ferguson — the last tractor you'll ever need.

VE BEEN RUNNING IN FAMILIES FOR GENERATIONS.

compact

p. 6

Smaller, hardworking tractors with plenty of muscle. Yet easy enough to hop on and get the job done.

utility

p. 10

All the horsepower you need for jobs like hay and heavier loading.

mid-range

p. 14

These tractors pack even more horsepower and are rugged enough for full-on, full-time work. Hay. Dairy. Municipality. And more.

“I KNOW I NEED A TRACTOR, BUT WHAT KIND?”

Tractors come in all shapes and sizes. While many of us only associate tractors with large farms, the fact is, even if you just have a few acres, a compact, utility or mid-range tractor can make your life a whole lot easier.

In fact, the right tractor can become one of the most important tools you own. From cutting grass to moving snow, from digging holes to hauling loads, the possibilities are endless. But with such an investment, it only makes sense to decide how much tractor you need before making a purchase.

compact
utility
mid-range

HOW MUCH LAND DO YOU HAVE? Do you plan to add more in the future? Since Massey Ferguson tractors are built to last, buying the right tractor now can be more cost-effective than upgrading later. Match the tractor to the land you live and work on.

WHAT KIND OF OPERATION DO YOU HAVE? Are you a full-time livestock, dairy or row crop farmer? Do you farm part time or maybe have a farm-to-table business? Is your farming more for “fun,” or do you have some property to maintain? Match the tractor to who you are.

WHAT KINDS OF JOBS DO YOU NEED TO GET DONE? Are you cutting grass? Tilling a garden? Doing some heavy lifting? Will you need to move snow? Brush? Hay? Spread manure? Match the tractor — and the implements you need — to the jobs you need to do.

YOUR DEALER CAN BE A BIG HELP.

Massey Ferguson is an AGCO® brand. At AGCO, we take pride in knowing our dealers are the best in the business. They'll be there to advise and support you throughout the selection and buying process, and help pick the right tractor for you. Then, after the sale, they'll continue to be there, day in and day out, for as long as you own your machine — with the service, expertise and parts you need to stay productive.

When you buy a Massey Ferguson tractor, it becomes part of your family and you become part of ours.

Go to page 18 to learn more about the implements that work with our tractors.

SO MUCH MORE THAN A MOWER.

Learn more at **masseyferguson.us**, or see your dealer for a demo.

GC1700 SERIES

Whether you're a small landowner or a hobby farmer, everything about the Massey Ferguson GC1700 Series is designed to help you get the job done right. From mowing, loading and backhoe work to snow-blowing and more, these multitaskers deliver impressive performance and unmatched versatility.

EASY TO USE. Providing more than just great ergonomics, the operator's station on the GC1700 Series makes the transition from lawn tractor to small compact virtually seamless. All major controls and functional pedals are in familiar, intuitive locations that are easy to reach and operate. So if you're ready for a real tractor, check out the GC1700 Series. With the largest engine in its class, it'll give you all it's got — and then some. Every single day.

1526 COMPACT TRACTORS

Our customers wanted a small tractor with a mid PTO for more versatility. We responded by bringing back the versatile Massey Ferguson 1526 premium compact tractor. This tractor's built especially for a new generation of landowners who want a machine that's as hardworking and practical as they are.

IT CAN DO MORE, BECAUSE IT'S MADE TO HANDLE MORE. The 1526 is a smaller tractor, but it's big on comfort, performance and versatility. That makes it the perfect all-around machine for tackling any number of chores on large acreage residences, small farms, golf courses and more. Best of all, it's not only one of the easiest tractors in its class to use, it's also one of the most comfortable.

MODELS	GC1705	GC1710	GC1715	GC1720	MF1526H
Rated Engine HP (kW)	22.5 (16.8) @ 2,600 RPM	22.5 (16.8) @ 2,600 RPM	24 (17.9) @ 3,000 RPM	24 (17.9) @ 3,000 RPM	24.8 (18.5) @ 2,600 RPM
Rated PTO HP (kW)	17.3 (12.9)	17.3 (12.9)	18.9 (14.1)	18.9 (14.1)	20 (14.9)
Engine type	Iseki 1.1 L 3-cylinder liquid-cooled diesel, Tier 4 Final				3-cylinder diesel
Transmission	2-range hydrostatic transmission with side-by-side foot pedals and cruise control				3-range hydrostatic w/ cruise control
Hydraulics	6.3 gpm (23.8 LPM) total flow, includes loader joystick		6.8 gpm (25.7 LPM) total flow, includes loader joystick		8.7 gpm (32.9 LPM) total flow; factory-installed joystick opt.

MASSEY FERGUSON 5 FIVE-YEAR POWERTRAIN WARRANTY

1700E SERIES

The Massey Ferguson 1700E Series is a compact, no-nonsense workhorse that's easy to operate, easy to afford and easy to love. These 4WD tractors, with standard rear 540 PTO, 3-point hitch and optional backhoe, deliver more than comparably-priced machines.

THE E STANDS FOR EFFICIENCY AND EASY. You get durability and legendary performance. Plus, more capability, more functionality and key features like a clean-burning, Tier 4 diesel engine, higher flow hydraulics and your choice of transmission.

MATCHED FRONT END LOADER. To further improve productivity, the Massey Ferguson loader features a quick-attach main frame design for quick and easy loader mounting and dismounting, as well as a frame-mounted hydraulic joystick for convenient loader control.

1700 SERIES PREMIUM

If you're looking for even more power, comfort, convenience and control, step up to the Massey Ferguson 1700 Series Premium tractors, with advanced engineering that goes above and beyond your expectations. You'll get performance options common in larger tractors, but with the simplicity and fuel efficiency of a compact.

EVERYTHING ABOUT THESE MACHINES IS PREMIUM. All 1700 Series Premium compacts boast a 540 RPM independent rear PTO, or optional mid PTO,* that engages electro-hydraulically with a simple twist of a knob on the front dash. These 36.2 to 59 gross horsepower tractors also include a wet clutch for durability and a modulation button for slow, smooth start-up to prevent shock load damage.

*Not available on the 1759

MODELS	1726E	1734E	1739E	1736	1742	1749	1754	1758	1759
Rated Engine HP (kW)	24.7 (18.4) @ 2,600 RPM	34 (25.4) @ 2,600 RPM	38.5 (28.7) @ 2,800 RPM	36.2 (27.0) @ 2,500 RPM	41.6 (31.0) @ 2,500 RPM	48.3 (36.0) @ 2,500 RPM	53.6 (40.0) @ 2,500 RPM	59.0 (44.0) @ 2,500 RPM	59.0 (44.0) @ 2,500 RPM
Rated PTO HP (kW)	20.9 (15.6) Gear 19.7 (14.7) HST	28.9 (21.6) Gear 27.2 (20.3) HST	32.7 (24.4) Gear 30.8 (23.0) HST	27.5 (20.5) Shuttle 26.3 (19.6) HST	32.8 (24.5) Shuttle 31.6 (23.6) HST	39.0 (29.1) Shuttle 37.8 (28.2) HST	42.1 (31.4) Shuttle 40.9 (30.5) HST	NA 44.4 (33.1) HST	45.6 (34.0) Shuttle NA
Engine type	Shibaura 1.5 L 3-cylinder diesel, Tier 4 Final			1.7 L 3-cylinder diesel			2.2 L 4-cylinder diesel		
Transmission	9 x 3 constant mesh / 3-range hydrostatic (HST)			12 x 12 power shuttle or Servo-HST		12 x 12 power shuttle or Servo-HST		Servo-HST	12 x 12 power shuttle
Hydraulics	10.5 gpm (40.0 LPM)	10.5 gpm (40.0 LPM)	11.3 gpm (42.7 LPM)	11.6 gpm (43.9 LPM)	11.6 gpm (43.9 LPM)	11.6 gpm (43.9 LPM)	11.6 gpm (43.9 LPM)	11.6 gpm (43.9 LPM)	12.8 gpm (48.5 LPM)

MASSEY FERGUSON 5 FIVE-YEAR POWERTRAIN WARRANTY

compact

Massey Ferguson and your dealer support you with an industry-leading parts warranty as well as factory-trained technicians who work as hard at preventing problems as they do repairing them.

MORE POWER FOR HAY AND LOADER WORK.

2700E SERIES

These hardworking, matter-of-fact tractors combine the practicality of a compact tractor with the added functionality of a utility tractor. That makes the versatile 2700E Series ideal for loader work, rotary cutting or any other rear PTO job that needs doing. These tractors are perfect for hobby farmers, farm-to-table operations, small businesses or just people with a lot of property and a ton of tasks to wrangle.

IT'S READY TO GO WHEN YOU ARE.
At 12.6 gallons (47.7 liters) per minute, the 2700E tractors have a higher hydraulic flow rate than comparable models, allowing for greater speed in loader work and tasks using other implements. So whether you're bringing in the hay, cleaning the barn or just doing general land maintenance, the two tractors in this series will not just be handy, but absolutely indispensable.

2600H SERIES

For more than 160 years, Massey Ferguson has been the benchmark for what a great utility tractor should be. Now we've added to that legacy with the 2600H Series, a rugged line of tough and dependable tractors that easy to use, easy to like and easy to pay for. Yet still rugged and durable. Featuring a simple, open design with a hood and fenders made out of solid steel. High capacity hydraulics for loader and implement work. And, of course, the legendary 3-point hitch that Massey Ferguson invented so long ago.

RE-WRITING THE DEFINITION OF VALUE. The 2600H Series offers four different models, ranging from 44.4 to 73 horsepower. Within each model, you get the option of 2- or 4-wheel drive. This helps determine your transmission and PTO. Our 8x2 Sliding Mesh and Live PTO give you a more inexpensive option, while the 8x8 Synchro Shuttle and Independent PTO provide even more great features at a low price.

MODELS	2705E	2706E
Rated Engine HP (kW)	48.8 (36.4) @ 2,600 RPM	57.3 (42.7) @ 2,600 RPM
Rated PTO HP (kW)	41.4 (30.9) 8x8 39.0 (29.1) HST	48.7 (36.3) 8x8 45.9 (34.2) HST
Engine type	Shibaura N4LDI-T, 2.2 L, 4-cylinder liquid-cooled diesel	Shibaura N4LDI-TA, 2.2 L, 4-cylinder liquid-cooled diesel
Transmission	8 x 8 (4-speed x 2 sub-range) syncro shuttle / 3-range mechanical HST	
Hydraulics	12.4 gpm (47.8 LPM)	

MODELS	2604H	2605H	2606H	2607H
Rated Engine HP (kW)	44.4 (33.1)	54.2 (40.4)	64.1 (47.8)	73.0 (54.4)
Rated PTO HP (kW)	38.0 (30.1)	46.0 (33.8)	55.0 (40.4)	64.0 (47.0)
Engine type	Simpsons 2.6 L, 3-cylinder, EPA Tier 4 final-compliant			
Transmission	2WD: 8F x 2R sliding mesh with live PTO 4WD: 8F x 8R synchro shuttle with independent PTO		8F x 8R synchro shuttle	
Hydraulics	15.7 gpm (59.5 LPM)			

4600M SERIES

Whether it's rural lifestyle farming, professional or government use, the Massey Ferguson 4600M Series is ideal for loader work, mowing, hay production and any other job you can throw at it. They're durable, easy-to-operate tractors in a small, yet powerful package with just the right mix of innovation, technology and comfort.

YEARS OF INNOVATION LEAD TO THIS. The 4600M Series tractors continue our legacy for a new generation of customers who demand premium quality in a very rugged machine. These Tier 4 Final tractors feature a more robust design, with more stability and more lift capacity than ever before. Not to mention a new optional deluxe cab.

4700 SERIES

You've got a ton of different jobs to get done every day, and the last thing you need is a lightweight tractor that shies away from the tough ones. That's why Massey Ferguson 4700 Series tractors are built extra tough to handle bigger jobs, while giving you added stability and comfort. At a best-in-class base weight of 7,125 lbs., the 4700 Series is purpose-built for more pulling power, more lift capacity and greater maneuverability.

UTILITY GOES HEAVY DUTY. Hay, dairy operations, small farms and more all need a tough do-everything tractor that can handle the heavy lifting. The 4700 Series tractors deliver, giving you the power and versatility to handle your toughest jobs so you can get more done faster, regardless of the kind of operation you have.

MODEL	MF4607M*	MF4609M	MF4610M	MF4707*	MF4708	MF4709	MF4710
Max Engine HP (kW) @ 2,000 RPM	70.1 (52.2)	89.8 (66.9)	99.0 (74.1)	75 (55.9)	85 (63.4)	95 (70.8)	100 (74.6)
Rated Engine HP (kW) @ 2,200 RPM	70.1 (52.2)	89.8 (66.9)	99.0 (74.1)	70 (52.2)	80 (59.7)	90 (67.1)	100 (74.6)
Rated PTO HP (kW) @ 2,200 RPM	56.0 (41.8)	72.0 (53.7)	80.0 (59.7)	57 (42.5)	66 (49.2)	75 (55.9)	84 (62.6)
Engine type	AGCO Power™ 3-cylinder, 3.3 L, intercooled turbocharged, high-pressure common rail direct fuel injection (HPCR)						
Transmission	12F x 12R 2-range Std. or 18F x 18R 3-range (with Opt. creeper gear), power shuttle – 6 gears synchronized, electro-hydraulic shuttle lever			**Classic:** 8F x 8R, 2-range, synchro shuttle, 4 gears synchronized **Deluxe:** 12F x 12R, 2-range, power shuttle, 6 gears synchronized	**Classic:** 8F x 8R, 2-range, syncro shuttle, mechanical shuttle lever **Deluxe:** 12F x 12R, 2-range, power shuttle, electro-hydraulic shuttle lever		**Classic:** 12F x 12R, 2-range, syncro shuttle, mechanical shuttle lever **Deluxe:** 12F x 12R, 2-range, power shuttle, electro-hydraulic shuttle lever
Hydraulics	17.5 gpm (66.5 LPM)			17.7 gpm (67 LPM)			

*Tier IV Final without the use of a DPF (diesel particulate filter) or DEF (diesel exhaust fluid).

utility

EVEN MORE POWER FOR MORE DEMANDING JOBS.

Every Massey Ferguson tractor is backed by a network of local dealers who are as committed to your tractor as you are. You can count on your dealer during critical planting, harvesting, mowing and spraying periods to always be there with emergency part drops and extended hours.

5700 SERIES

If you need to work efficiently in a variety of conditions, look no further than the Massey Ferguson 5700 Series. These tractors are engineered from the ground up for smart, versatile, long-lasting operation. They won't let you down, no matter how demanding the job, and are especially easy to use, with a price point seldom found on this size tractor.

A BIGGER TRACTOR AND MORE HP FOR YOUR MONEY. Built as part of Massey Ferguson's commitment to developing a completely new range of modern and versatile tractors, the 5700 Series tractors are ideally suited to get the job done right, wherever you work, from livestock and dairy enterprises to mixed farms, transport and loader applications.

6700 SERIES

Your work is demanding. You want a tractor ready to meet that demand — and then some. The heavy-duty 6700 Series is ready to go when you are, with the power to pull larger, heavier implements and take on even the most rigorous tasks in a variety of conditions and environments.

SPACIOUS AIR-CONDITIONED CAB FOR OPERATOR COMFORT. These strong, agile machines come with the largest cab in the sector, offering industry-leading comfort, control and functionality. Plus you get lower cab noise than everyone in the industry. The low cost of ownership is an added bonus and makes them well-suited to working in fleets on large enterprises, or as complimentary tractors on large farms.

MODELS	MF5710	MF5711	MF6712	MF6713*
Max Engine HP (kW) @ 2,000 RPM	100 (74.6)	110 (82)	120 (89.4)	130 (96)
Rated Engine HP (kW) @ 2,200 RPM	95 (70.8)	105 (78.3)	115 (85.8)	125 (93.2)
Rated PTO HP (kW) @ 2,200 RPM	82 (61.2)	92 (68.6)	99 (73.8)	109 (81.3)
Engine type	AGCO Power™ 4-cylinder, 4.4 L, intercooled turbo-charger, high-pressure common-rail direct fuel injection (HPCR)			
Transmission	**Classic:** 5710 & 5711: 12F x 12R, 2-range, syncro shuttle, mechanical shuttle lever **Deluxe:** 5710 & 5711: 12F x 12R, 2-range, power shuttle, electro-hydraulic shuttle lever **Deluxe:** 6712 & 6713: 12F x 12R, 2-range, power shuttle, electro-hydraulic shuttle lever			
Hydraulics	**Classic:** Main pump 15.1 (57) **Deluxe:** Main pump 15.1 (57) & Auxiliary pump 10.8 (41), Total combined 25.9 (98)		**Deluxe:** Main pump 15.1 (57) & Auxiliary pump 10.8 (41), Total combined 25.9 (98)	

*Not currently for sale in the state of Nebraska

mid-range

5700SL SERIES

The Massey Ferguson 5700SL Series is one of the most advanced, premium, mid-range tractor we've ever made. With its smart and stylish award-winning design, the 5700SL Series features the best visibility on the market, and the latest on-board technologies, too.

THE ULTIMATE DO-ANYTHING, GO-ANYWHERE WORKHORSE. Because of its small size, this tractor offers excellent maneuverability, even in tight quarters. Its powerful 110-130 horsepower four cylinder, 4.4 liter engine means it can get any job you need done fast and done right. Plus, our exclusive Hi-Vis hood coupled with the multi-function joystick makes this tractor the best loader tractor on the market.

PLENTY OF OPTIONS

The 5700SL Series offers 540/540e/1000 PTO options or an integrated front hitch and PTO. You can also choose closed center hydraulics and up to four rear valves. Lastly, our Visio Roof option gives you better visibility for all types of loader and implement work.

MODELS	MF5711SL	MF5712SL	MF5713SL*
Max Engine HP (kW) @ 2,000 RPM	110 (82)	120 (89.5)	130 (96.9)
Rated Engine HP (kW) @ 2,200 RPM	105 (78.3)	115 (85.8)	125 (93.2)
Rated PTO HP (kW) @ 2,200 RPM	85 (63.4)	95.0 (70.8)	105 (78.3)
Engine type	AGCO Power™ 4-cylinder, 4.4 L, intercooled turbocharger, high-pressure common rail direct fuel injection (HPCR)		
Transmission	Dyna-4 16 x 16 Powershift and power shuttle transmission, available 13:68:1 creeper		
Hydraulics	15 gpm (57 LPM) (open center), 26 gpm (100 LPM) (twin flow) 29 gpm (110 LPM) Opt. (closed center)		

*Not currently for sale in the state of Nebraska

WE'VE GOT THE TOOLS YOU NEED TO GET THE JOB DONE RIGHT.

Every Massey Ferguson compact, utility and mid-range tractor is designed to be versatile, but it's important to remember that your tractor's usefulness can go well beyond cutting grass and plowing fields.

With the right implements and attachments, these tractors can be ready to handle whatever job you throw at them, from moving and spreading manure, clearing snow, digging post holes, tilling soil, cutting hay, clearing brush and much more.

Best of all, Massey Ferguson and our dealer network offer a wide selection of front loaders, backhoes, rotary cutters, shredders, rakes, seeders and more that are all made to attach quickly and easily to your tractor.

MASSEY FERGUSON

Dozer blades
Rotary brooms
Loaders
Backhoes
Snow blowers
Mower decks

HAY IMPLEMENTS

Round balers
Small square balers
Disc mowers
Mower conditioners
Rakes
Tedders

WOODS EQUIPMENT

Batwing rotary cutters
Single spindle rotary cutters
Multi-spindle rotary cutters
Rear-discharge finish mowers
Mid-mount finishing mowers
Center drive flail shredders
End drive flail shredders
Snow blowers
Rear blades
Box scrapers
Grading scrapers
Landscape rakes
Precision super seeders
Post hole diggers
Forward and reverse rotary tillers
Disc harrows

MASSEY FERGUSON

THE LAST TRACTOR YOU'LL EVER NEED.
WE'RE HERE TO MAKE SURE.

FIVE-YEAR POWERTRAIN WARRANTY

We've been making tractors for a long time, and we believe in what we make. That's why we offer a five-year powertrain warranty. Some restrictions may apply. Please see dealer for full details.

TOTAL SUPPORT — ALWAYS AVAILABLE

The Massey Ferguson distributor and dealer network comes with the support and service you need to keep working — whenever and wherever you need it.

LOW-RATE, FLEXIBLE FINANCING

With competitive rates and easy terms, your Massey Ferguson dealer and AGCO Finance® offer great ways to buy, lease or rent your new machine.

QUALITY PARTS

Genuine Massey Ferguson replacement parts are made to the same high standards as those used on the assembly line, so you can always keep your Massey Ferguson tractor running like new.

AGCO PARTS

SHOW YOUR MASSEY FERGUSON PRIDE

Choose from collectibles, toys, work and leisure wear, accessories and more. Visit **shopagco.com** today.

AGCO ANSWERS

At AGCO, customer care isn't just a department, it's a commitment. We'll do our best to answer any questions promptly, or put you in touch with someone who can. AGCO Answers: (877) 525-4384 or agcoanswers@agcocorp.com

We proudly support:

Farm Safety 4 Just Kids

AGCO
Your Agriculture Company

For more than 25 years, AGCO has been on a mission to become the single resource farmers can depend on for innovative, leading-edge thinking, equipment and technology. And, today, you know AGCO brands, even if you don't know the AGCO name. While AGCO equipment may not all share the same logo or same color, they all have one thing in common — the ability to help farmers be as productive and profitable as they possibly can be, regardless of the tasks at hand. **agcocorp.com**

MASSEY FERGUSON · FENDT · GSI · Challenger · GLEANER

©2016 AGCO Corporation. Massey Ferguson is a worldwide brand of AGCO Corporation. AGCO and Massey Ferguson are trademarks of AGCO®. All rights reserved. MF16B004CR

AGCO may at any time, and from time to time, for technical or other necessary reasons, modify any of the data, specifications or warranty of the products described herein. Some equipment shown may be optional. Attention: Photographs in this publication may show protective shields and guards open or removed for the purposes of illustration. Be certain all shields and guards are in place during operation.

AGCO is a premier manufacturer of agricultural equipment, providing high-tech solutions for professional farmers feeding the world. The company is dedicated to delivering superior customer service, innovation and quality. AGCO products are distributed in more than 140 countries worldwide.

FSC www.fsc.org
MIX
Paper from responsible sources
FSC® C010364

CONTRACT # 071B7700094 - **AWARDED** SPECIFICATIONS FOR PURCHASE					DELIVERY
Spec #	EQUIPMENT MAKE & MODEL:	EQUIPMENT CATEGORY	Quoted Price	Hourly rate for training (per Schedule A, Statement of Work, section A.,3.3)	Per mile from Contractor's nearest dealer location (Minimum Charge of $150)
23	C05-0901.16 Roadside Tractor - MF4710	Tractor	$41,346.23	$85.00	$2.00 per loaded mile
NON-AWARDED SPECIFICATIONS FOR PURCHASE					
23	C05-0901.16 Roadside Tractor - MF5711	Tractor	$44,285.45	$85.00	$2.00 per loaded mile
25	C05-1001-16 Tractor Lawn Mower 2 Wheel steer - GC1705	Tractor/Mower	$9,102.52	$85.00	$2.00 per loaded mile

Catalog Pricing For PURCHASE						DELIVERY
Item #	EQUIPMENT MAKE & MODEL:	EQUIPMENT CATEGORY	List Pricing	% Discount Off List	Set-Up Fees	Per mile from Contractor's nearest dealer location (Minimum Charge of $150)
1	Massey Ferguson Compact Tractors - MFGC1700	Tractor	See Schedule F2 - Pricing Sheets	24%	Included	$2.00 per loaded mile
2	Massey Ferguson Compact Tractors - MF1500	Tractor	See Schedule F2 - Pricing Sheets	22%	Included	$2.00 per loaded mile
3	Massey Ferguson Compact Tractors - MF1700E	Tractor	See Schedule F2 - Pricing Sheets	22%	Included	$2.00 per loaded mile
4	Massey Ferguson Compact Tractors - MF1700	Tractor	See Schedule F2 - Pricing Sheets	22%	Included	$2.00 per loaded mile
5	Massey Ferguson Utilty Tractors - MF2600	Tractor	See Schedule F2 - Pricing Sheets	21%	Included	$2.00 per loaded mile
6	Massey Ferguson Utilty Tractors - MF2700E	Tractor	See Schedule F2 - Pricing Sheets	21%	Included	$2.00 per loaded mile
7	Massey Ferguson Utilty Tractors - MF2600H	Tractor	See Schedule F2 - Pricing Sheets	21%	Included	$2.00 per loaded mile
8	Massey Ferguson Utilty Tractors - MF4600/MF4600M	Tractor	See Schedule F2 - Pricing Sheets	21%	Included	$2.00 per loaded mile
9	Massey Ferguson Utilty Tractors - MF4700	Tractor	See Schedule F2 - Pricing Sheets	21%	Included	$2.00 per loaded mile
10	Massey Ferguson Mid-Range Tractors - MF5609/MF5610/MF5611	Tractor	See Schedule F2 - Pricing Sheets	27%	Included	$2.00 per loaded mile
11	Massey Ferguson Mid-Range Tractors - MF5710/MF5711 (Global Series)	Tractor	See Schedule F2 - Pricing Sheets	27%	Included	$2.00 per loaded mile
12	Massey Ferguson Mid-Range Tractors - MF5612/MF5613/MF5700SL	Tractor	See Schedule F2 - Pricing Sheets	28%	Included	$2.00 per loaded mile
13	Massey Ferguson Mid-Range Tractors - MF6600	Tractor	See Schedule F2 - Pricing Sheets	28%	Included	$2.00 per loaded mile
14	Massey Ferguson Mid-Range Tractors - MF6700 (Global Series)	Tractor	See Schedule F2 - Pricing Sheets	28%	Included	$2.00 per loaded mile
15	Massey Ferguson Mid-Range Tractors - MF6700S	Tractor	See Schedule F2 - Pricing Sheets	28%	Included	$2.00 per loaded mile
16	Massey Ferguson High Horsepower Tractors - MF7600	Tractor	See Schedule F2 - Pricing Sheets	30%	Included	$2.00 per loaded mile
17	Massey Ferguson High Horsepower Tractors - MF7700	Tractor	See Schedule F2 - Pricing Sheets	30%	Included	$2.00 per loaded mile
18	Massey Ferguson High Horsepower Tractors - MF8600	Tractor	See Schedule F2 - Pricing Sheets	30%	Included	$2.00 per loaded mile
19	Massey Ferguson High Horsepower Tractors - MF8700	Tractor	See Schedule F2 - Pricing Sheets	30%	Included	$2.00 per loaded mile
20	All Loaders, Mowers, Blades, Snow Blowers, & Backhoes	Tractor Attachments	See Schedule F2 - Pricing Sheets	22%	*Included	
21	Massey Ferguson Combines	Combines	See Schedule F2 - Pricing Sheets	27%	*Included	
22	Massey Ferguson Hay Equipment	Hay Equipment	See Schedule F2 - Pricing Sheets	27%	*Included	
23	Massey Ferguson Tillage	Tillage	See Schedule F2 - Pricing Sheets	27%	*Included	
24	Massey Ferguson Planters	Planter	See Schedule F2 - Pricing Sheets	27%	*Included	

**1% Additional Discount on 3-4 units

**2% Additional Discount on 5+ units

Notes:

1. *Set-up fees are included when attachements and/or options are included on the same Purchase Order.

2. **A Mulitple unit discount is available to all Government agencies in the State of Michigan, purchasing 3 or more like products on the same purchase order. Like products are those listed in the same section of the price book, i.e. Compacts, Utility, Mid-Range & High Horespower. Attachements (loaders, mowers, backhoes, blades & snow blowers) will get the same discount as the tractor they are intended to go on. Attachements do not add to the multiple count but are eligible for the discount.

MASSEY FERGUSON®

TRACTORS

MASSEY FERGUSON®

TRACTOR INDEX

COMPACT TRACTORS

COMPACT . . . . . **Compact - 1**
GC1705 . . . . . Compact - 2
GC1710 . . . . . Compact - 4
GC1715 . . . . . Compact - 6
GC1720 . . . . . Compact - 8

1526H . . . . . Compact - 11
1726E . . . . . Compact - 13
1734E . . . . . Compact - 16
1739E . . . . . Compact - 19
1736 . . . . . Compact - 23
1742 . . . . . Compact - 27
1749 . . . . . Compact - 31
1754 . . . . . Compact - 35
1758 . . . . . Compact - 39
1759 . . . . . Compact - 43

Field Installed Accessories . . . . . Compact - 47
Compact Tires . . . . . Compact - 51
Utility Tires . . . . . Compact - 52

UTILITY TRACTORS

2600H SERIES UTILITY . . . . . **MF2600H - 1**
2604H . . . . . MF2600H - 2
2605H . . . . . MF2600H - 5
2606H . . . . . MF2600H - 9
2607H . . . . . MF2600H - 13
Field Installed Accessories . . . . . MF2600H - 17

2700E SERIES UTILITY . . . . . **MF2700E - 1**
2705E . . . . . MF2700E - 2
2706E . . . . . MF2700E - 5
Field Installed Accessories . . . . . MF2700E - 8

4600M SERIES UTILITY . . . . . **MF4600M - 1**
4607M . . . . . MF4600M - 2
4609M . . . . . MF4600M - 5
4610M . . . . . MF4600M - 8
Field Installed Accessories . . . . . MF4600M - 11

4700 SERIES UTILITY . . . . . **MF4700 - 1**
4708 . . . . . MF4700 - 2
4709 . . . . . MF4700 - 2
4710 . . . . . MF4700 - 2
Field Installed Accessories . . . . . MF4700 - 7

TRACTOR INDEX

MASSEY FERGUSON®

MID RANGE TRACTORS

5700 GLOBAL SERIES - MID RANGE . . . . . MF5700 - 1
5710, 5711 Platform . . . . . MF5700 - 2
5710, 5711 Cab . . . . . MF5700 - 8

5700SL SERIES - MID RANGE . . . . . MF5700 - 1
5711SL, 5712SL, 5713SL Classic . . . . . MF5700 - 3
5711SL, 5712SL, 5713SL Deluxe . . . . . MF5700 - 11

6700S GLOBAL SERIES - MID RANGE. . . . . MF6700S - 1
6712, 6713 Platform . . . . . MF6700S - 2
6712, 6713 Cab . . . . . MF6700S - 7

6700S SERIES - MID RANGE . . . . . MF6700S - 1
6715S, 6716S Classic . . . . . MF6700S - 3
6714S, 6715S, 6715S Deluxe . . . . . MF6700S - 16
6714S, 6715S, 6715S Premium . . . . . MF6700S - 33

HIGH HORSEPOWER TRACTORS

7700 SERIES - HIGH HORSEPOWER . . . . . MF7700 - 1
7714, 7715, 7716, 7718 Series. . . . . MF7700 - 3
Classic Editions. . . . . MF7700 - 4
Deluxe Editions. . . . . MF7700 - 18
Premium Editions. . . . . MF7700 - 30

7719, 7720, 7722, 7724, 7726 Series . . . . . MF7700 - 42
Classic Editions. . . . . MF7700 - 43
Deluxe Editions. . . . . MF7700 - 55
Premium Editions. . . . . MF7700 - 71

8700 SERIES - HIGH HORSEPOWER . . . . . MF8600 - 1
8727, 8730, 8732, 8735, 8737 . . . . . MF8600 - 4
Wheel Tread Settings . . . . . MF8600 - 20

MASSEY FERGUSON®

Reserved

MASSEY FERGUSON®

COMPACT TRACTORS

GC1705 GARDEN COMPACT

MASSEY FERGUSON®

(F.O.B. Port of Entry)

TRACTOR FEATURES

POWER TRAIN

- Engine:
  22.5 Gross HP 3 Cyl Diesel 68.5 CID (1.1 L)
  22.0 Net HP @ 2600 RPM
  18.7 PTO HP @ 2600 RPM
- Dry Type Single Air Cleaner
- Transmission: 2 Range Hydrostatic with Cruise Control
- Wet Disk Brakes
- Parking Brake
- Differential Lock
- PTO: 540 RPM Independent PTO
  2000 RPM Mid Independent PTO

HYDRAULIC SYSTEM

- 3-Point Hitch, Cat I With Directional Control,
- Auto Return Lever System
- Engine Driven Gear Pump
- 3-Point Hitch 4.3 GPM (15.5 LPM)
- Power Steering 2.0 GPM (7.5 LPM)
- Total Combined Flow 6.3 GPM (23.1 LPM)

INSTRUMENTS

- Tachometer / Hourmeter
- Engine Coolant Gauge Fuel Gauge
- Warning Lights: Electrical Charging, Oil Pressure and Water Temperature

OTHER STANDARD FEATURES

- Hydrostatic Power Steering
- Hand Accelerator
- Forward And Reverse Foot Pedal
- Electric Fuel Shut-Off
- 12 Volt Electrical System
- Battery: 390 Cold Cranking Amps
- Full Adjustable Seat With Retractable Seat Belt
- 2 Post Fixed Rops
- Tilt-Up Hood
- Turn Signals, Flashers, Tail Lights
- Factory Joystick Optional
- Hydraulic Manifold with Pressure and Return Lines on Model with Factory Joystick

- ***Note: 3-Point Backhoe Installation Voids Warranty***

IMPLEMENT FEATURES

MF DL95 LOADER

- One Piece Main Frame with Tapered Arms and Single Cross Member
- Quick Attach Loader Frame Mount with Pin Lock
- Built-in Parking Stands
- (2) 1.6 inch Double Acting Lift Cylinders
- (2) 1.75 inch Double Acting Bucket Cylinders
- Regenerative Hydraulics for Simultaneous Operation of Lift/Lower and Curl/Dump Functions
- Hydraulic Lines Routed Inside Main Frame for Protection and Visibility
- Galvanized Steel Bushings with Recessed Grease Points
- 48-inch Standard Duty Pin-Type Bucket
- Grille Guard Standard
- Maximum Lift Height: 72.8 Inches
- Lift Capacity to Full Height @ 19.6 inches Forward of Pivot Pin: 580 lbs
- Breakout Force: 920 lbs
- Rated Hydraulic Pressure: 1914 PSI
- Fits all GC1700 Series Tractors

AVAILABLE ATTACHMENTS (REFER TO IMPLEMENT SECTIONS)

- MF 2315, 2320 and 2326 Mid Mounted Mowers
- MF 2360 Front Mounted Snow Blower
- MF 2330 Front Mounted Rotary Broom
- MF 2335 Front Mounted Blade
- MF 2340 Front Mounted Heavy Duty Blade

GC1705 GARDEN COMPACT

MASSEY FERGUSON®

Order Code	Catalog Number	Description	Approx. Weight	List Price

ORDER TRACTOR ONLY OR
TRACTOR AND LOADER BELOW
THEN ORDER ONE CODE FROM GROUP 03 THROUGH 04 AS REQUIRED

BASE MACHINE — GROUP 01

MFGC1705		**MFGC1705 Hydrostatic Base Tractor**		
F-RE3	72530380	4wd Platform		9,149.00
F-J-RE3	72530381	4wd Platform with Factory Joystick		9,809.00

LOADER - For 4WD with Joystick Only — GROUP 02

	72533626	MFDL95 Loader Package Includes: Mount, Bucket, Hoses, Grille Guard	486	2,879.00

Note: For Additional Loader Options, Refer to Implements Price List Revision

*** ALL Tractors will be charged $135 for Assembly**

TIRES & WHEELS - Choose only one set of Tires & Wheels — GROUP 03

NOTE: See Dealer / Field Installed Accessories for list of Tires & Wheels available as Loose Accessory orders. Tire and wheel options ordered with the tractor and not subject to availability can be returned via RGA. Contact Dealer Central with questions.

For Tractor or Tractor-Loader:

72530281M	Front: 18x8.50-10 AG Rear: 26x12.00-12 AG	148	669.00
72530282M	Front: 18x8.50-10 Turf Rear: 26x12.00-12 Turf	140	599.00
72530283M	Front: 18x8.50-10 Industrial Rear: 26x12.00-12 Industrial		719.00

FRENCH OPERATOR'S MANUAL — GROUP 04

72530175	French Operator's Manual	No Charge

GC1710 TLB GARDEN COMPACT

MASSEY FERGUSON®

(F.O.B. Port of Entry)

TRACTOR FEATURES

POWER TRAIN

- Engine:
  22.5 Gross HP 3 Cyl Diesel 68.5 CID (1.1 L)
  22.0 Net HP @ 2600 RPM
  18.7 PTO HP @ 2600 RPM
- Dry Type Single Air Cleaner
- Transmission: 2 Range Hydrostatic with Cruise Control
- Wet Disk Brakes
- Parking Brake
- Differential Lock
- PTO: 540 RPM Independent PTO
  2000 RPM Mid Independent PTO

HYDRAULIC SYSTEM

- 3-Point Hitch, Cat I With Directional Control,
- Auto Return Lever System
- Engine Driven Gear Pump
- 3-Point Hitch 4.3 GPM (15.5 LPM)
- Power Steering 2.0 GPM (7.5 LPM)
- Total Combined Flow 6.3 GPM (23.1 LPM)

INSTRUMENTS

- Tachometer / Hourmeter
- Engine Coolant Gauge Fuel Gauge
- Warning Lights: Electrical Charging, Oil Pressure and Water Temperature

OTHER STANDARD FEATURES

- Hydrostatic Power Steering
- Hand Accelerator
- Forward And Reverse Foot Pedal
- Electric Fuel Shut-Off
- 12 Volt Electrical System
- Battery: 390 Cold Cranking Amps
- Full Adjustable Seat With Retractable Seat Belt
- 2 Post Folding Rops
- Tilt-Up Hood
- Turn Signals, Flashers, Tail Lights
- Factory Joystick
- Hydraulic Manifold with Pressure and Return Lines on Model with Factory Joystick

- ***Note: 3-Point Backhoe Installation Voids Warranty***

IMPLEMENT FEATURES

MF DL95 LOADER

- One Piece Main Frame with Tapered Arms and Single Cross Member
- Quick Attach Loader Frame Mount with Pin Lock
- Built-in Parking Stands
- (2) 1.6 inch Double Acting Lift Cylinders
- (2) 1.75 inch Double Acting Bucket Cylinders
- Regenerative Hydraulics for Simultaneous Operation of Lift/Lower and Curl/Dump Functions
- Hydraulic Lines Routed Inside Main Frame for Protection and Visibility
- Galvanized Steel Bushings with Recessed Grease Points
- 48-inch Standard Duty Pin-Type Bucket
- Grille Guard Standard
- Maximum Lift Height: 72.8 Inches
- Lift Capacity to Full Height @ 19.6 inches Forward of Pivot Pin: 580 lbs
- Breakout Force: 920 lbs
- Rated Hydraulic Pressure: 1914 PSI
- Fits all GC1700 Series Tractors

MF CB65 BACKHOE

- Digging Depth: 78 inch (2.0 m)
- Max Reach: 107 inch (2.7 m)
- Transport Height: 71 inches (1.8 m)
- Stabilizer Spread - Transport: 47 inch (1.2 m)
- Stabilizer Spread - Operating: 80 inch (2.0 m)
- Loading Height: 66 inch (1.7 m)
- Angle of Departure: 20 Degrees
- Swing Arc: 150 Degrees
- Bucket Rotation: 177 Degrees
- Shipping Weight: 635 lbs (288 kg)
- Digging Force Using Bucket Cylinder: 2476 lb (1123 kg)
- Digging Force Using Dipper Cylinder: 1748 lb (793 kg)
- Single Cylinder Boom Swing

NOTE: Dimensions may change due to tire size

AVAILABLE ATTACHMENTS (REFER TO IMPLEMENT SECTIONS)

- MF 2315, 2320, 2326 Mid Mounted Mowers
- MF 2360 Front Mounted Snow Blower
- MF 2330 Front Mounted Rotary Broom
- MF 2335 Front Mounted Blade
- MF 2340 Front Mounted Heavy Duty Blade

GC1710 TLB GARDEN COMPACT

MASSEY FERGUSON®

Order Code	Catalog Number	Description	Approx. Weight	List Price

ORDER TRACTOR, LOADER AND BACKHOE BELOW
THEN ORDER ONE CODE FROM GROUP 02 THROUGH 04 AS REQUIRED

BASE MACHINE — GROUP 01

MFGC1710 — **MFGC1710 Hydrostatic Base Tractor Loader Backhoe**

F-J-LE3	72530382	4WD Platform Tractor with Joystick Includes DL95 Loader and CB65 Backhoe completely assembled		17,739.00

Note: For Additional Loader Options, Refer to Implements Price List Revision

*** ALL Tractors will be charged $135 for Assembly**

TIRES & WHEELS — GROUP 02

NOTE: See Dealer / Field Installed Accessories for list of Tires & Wheels available as Loose Accessory orders. Tire and wheel options ordered with the tractor and not subject to availability can be returned via RGA. Contact Dealer Central with questions.

	72530281M	Front: 18x8.50-10 AG Rear: 26x12.00-12 AG	148	669.00
	72530282M	Front: 18x8.50-10 Turf Rear: 26x12.00-12 Turf	140	599.00
	72530283M	Front: 18x8.50-10 Industrial Rear: 26x12.00-12 Industrial		719.00

BACKHOE OPTIONS — GROUP 03

	72533783ML	10-inch Bucket with 2 Teeth		359.00
	72533784ML	12-inch Bucket with 3 Teeth		409.00

FRENCH OPERATOR'S MANUAL — GROUP 04

	72530175	French Operator's Manual		No Charge

GC1715 GARDEN COMPACT

MASSEY FERGUSON®

(F.O.B. Port of Entry)

TRACTOR FEATURES

POWER TRAIN

- Engine:
  25.0 Gross HP 3 Cyl Diesel 68.5 CID (1.1 L)
  23.9 Net HP @ 3000 RPM
  19.6 PTO HP @ 3000 RPM
- Dry Type Single Air Cleaner
- Transmission: 2 Range Hydrostatic with Cruise Control
- Wet Disk Brakes
- Parking Brake
- Differential Lock
- PTO: 540 RPM Independent PTO
  2000 RPM Mid Independent PTO

HYDRAULIC SYSTEM

- 3-Point Hitch, Cat I With Directional Control,
- Auto Return Lever System
- Engine Driven Gear Pump
- 3-Point Hitch 4.8 GPM (15.5 LPM)
- Power Steering 2.0 GPM (7.5 LPM)
- Total Combined Flow 6.8 GPM (23.1 LPM)

INSTRUMENTS

- Tachometer / Hourmeter
- Engine Coolant Gauge Fuel Gauge
- Warning Lights: Electrical Charging and Oil Pressure and Water Temperature

OTHER STANDARD FEATURES

- Hydrostatic Power Steering
- Hand Accelerator
- Forward And Reverse Foot Pedal
- Electric Fuel Shut-Off
- 12 Volt Electrical System
- Battery: 390 Cold Cranking Amps
- Full Adjustable Seat With Retractable Seat Belt
- 2 Post Fixed ROPS
- Tilt-Up Hood
- Turn Signals, Flashers, Tail Lights
- Factory Joystick
- Hydraulic Manifold with Pressure and Return Lines on Model with Factory Joystick

- ***Note: 3-Point Backhoe Installation Voids Warranty***

IMPLEMENT FEATURES

MF DL95 LOADER

- One Piece Main Frame with Tapered Arms and Single Cross Member
- Quick Attach Loader Frame Mount with Pin Lock
- Built-in Parking Stands
- (2) 1.6 inch Double Acting Lift Cylinders
- (2) 1.75 inch Double Acting Bucket Cylinders
- Regenerative Hydraulics for Simultaneous Operation of Lift/Lower and Curl/Dump Functions
- Hydraulic Lines Routed Inside Main Frame for Protection and Visibility
- Galvanized Steel Bushings with Recessed Grease Points
- 48-inch Standard Duty Pin-Type Bucket
- Grille Guard Standard
- Maximum Lift Height: 72.8 Inches
- Lift Capacity to Full Height @ 19.6 inches Forward of Pivot Pin: 580 lbs
- Breakout Force: 920 lbs
- Rated Hydraulic Pressure: 1914 PSI
- Fits all GC1700 Series Tractors

AVAILABLE ATTACHMENTS (REFER TO IMPLEMENT SECTIONS)

- MF 2315, 2320 and 2326 Mid Mounted Mowers
- MF 2360 Front Mounted Snow Blower
- MF 2330 Front Mounted Rotary Broom
- MF 2335 Front Mounted Blade
- MF 2340 Front Mounted Heavy Duty Blade

GC1715 GARDEN COMPACT

MASSEY FERGUSON®

Order Code	Catalog Number	Description	Approx. Weight	List Price

ORDER TRACTOR ONLY OR
TRACTOR AND LOADER BELOW
THEN ORDER ONE CODE FROM GROUP 03 THROUGH 04 AS REQUIRED

BASE MACHINE — GROUP 01

MFGC1715		**MFGC1715 Hydrostatic Base Tractor**		
F-J-RE3	72530383	4wd Platform with Factory Joystick		11,109.00

LOADER — GROUP 02

	72533626	MFDL95 Loader Package Includes: Mount, Bucket, Hoses, Grille Guard	486	2,879.00

Note: For Additional Loader Options, Refer to Implements Price List Revision

*** ALL Tractors will be charged $135 for Assembly**

TIRES & WHEELS - Choose only one set of Tires & Wheels — GROUP 03

NOTE: See Dealer / Field Installed Accessories for list of Tires & Wheels available as Loose Accessory orders. Tire and wheel options ordered with the tractor and not subject to availability can be returned via RGA. Contact Dealer Central with questions.

For Tractor or Tractor-Loader:

72530281M	Front: 18x8.50-10 AG Rear: 26x12.00-12 AG	148	669.00
72530282M	Front: 18x8.50-10 Turf Rear: 26x12.00-12 Turf	140	599.00
72530283M	Front: 18x8.50-10 Industrial Rear: 26x12.00-12 Industrial		719.00

FRENCH OPERATOR'S MANUAL — GROUP 04

72530175	French Operator's Manual	No Charge

GC1720 TLB GARDEN COMPACT

TRACTOR LOADER BACKHOE

MASSEY FERGUSON®

(F.O.B. Port of Entry)

TRACTOR FEATURES

POWER TRAIN

- Engine:
  25.0 Gross HP 3 Cyl Diesel 68.5 CID (1.1 L)
  23.9 Net HP @ 3000 RPM
  19.6 PTO HP @ 3000 RPM
- Dry Type Single Air Cleaner
- Transmission: 2 Range Hydrostatic with Cruise Control
- Wet Disk Brakes
- Parking Brake
- Differential Lock
- PTO: 540 RPM Independent PTO
  2000 RPM Mid Independent PTO

HYDRAULIC SYSTEM

- 3-Point Hitch Rockshaft with Control Valve Category I Lower Draft Arms
- Engine Driven Gear Pump
- 3-Point Hitch 4.8 GPM (15.5 LPM)
- Power Steering 2.0 GPM (7.5 LPM)
- Total Combined Flow 6.8 GPM (23.1 LPM)

INSTRUMENTS

- Tachometer / Hourmeter
- Engine Coolant Gauge Fuel Gauge
- Warning Lights: Electrical Charging and Oil Pressure and Water Temperature

OTHER STANDARD FEATURES

- Hydrostatic Power Steering
- Hand Accelerator
- Side by Side Forward and Reverse Pedals
- Electric Fuel Shut-Off
- 12 Volt Electrical System
- Battery: 390 Cold Cranking Amps
- Full Adjustable Seat With Retractable Seat Belt
- 2 Post Folding Rops
- Tilt-Up Hood
- Turn Signals, Flashers, Tail Lights
- Factory Joystick
- Hydraulic Manifold with Pressure and Return Lines on Model with Factory Joystick

- ***Note: 3-Point Backhoe Installation Voids Warranty***

IMPLEMENT FEATURES

MF DL95 LOADER

- One Piece Main Frame with Tapered Arms and Single Cross Member
- Quick Attach Loader Frame Mount with Pin Lock
- Built-in Parking Stands
- (2) 1.6 inch Double Acting Lift Cylinders
- (2) 1.75 inch Double Acting Bucket Cylinders
- Regenerative Hydraulics for Simultaneous Operation of Lift/Lower and Curl/Dump Functions
- Hydraulic Lines Routed Inside Main Frame for Protection and Visibility
- Galvanized Steel Bushings with Recessed Grease Points
- 48-inch Standard Duty Pin-Type Bucket
- Grille Guard Standard
- Maximum Lift Height: 72.8 Inches
- Lift Capacity to Full Height @ 19.6 inches Forward of Pivot Pin: 580 lbs
- Breakout Force: 920 lbs
- Rated Hydraulic Pressure: 1914 PSI
- Fits all GC1700 Series Tractors

MF CB65 BACKHOE

- Digging Depth: 78 inch (2.0 m)
- Max Reach: 107 inch (2.7 m)
- Transport Height: 71 inches (1.8 m)
- Stabilizer Spread - Transport: 47 inch (1.2 m)
- Stabilizer Spread - Operating: 80 inch (2.0 m)
- Loading Height: 66 inch (1.7 m)
- Angle of Departure: 20 Degrees
- Swing Arc: 150 Degrees
- Bucket Rotation: 177 Degrees
- Shipping Weight: 635 lbs (288 kg)
- Digging Force Using Bucket Cylinder: 2476 lb (1123 kg)
- Digging Force Using Dipper Cylinder: 1748 lb (793 kg)
- Single Cylinder Boom Swing

NOTE: Dimensions may change due to tire size

AVAILABLE ATTACHMENTS (REFER TO IMPLEMENT SECTIONS)

- MF 2315, 2320, 2326 Mid Mounted Mowers
- MF 2360 Front Mounted Snow Blower
- MF 2330 Front Mounted Rotary Broom
- MF 2335 Front Mounted Blade
- MF 2340 Front Mounted Heavy Duty Blade

GC1720 TLB GARDEN COMPACT

MASSEY FERGUSON®

Order Code	Catalog Number	Description	Approx. Weight	List Price

ORDER TRACTOR, LOADER AND BACKHOE BELOW
THEN ORDER ONE CODE FROM GROUP 02 THROUGH 04 AS REQUIRED

BASE MACHINE — GROUP 01

MFGC1720 — **MFGC1720 Hydrostatic Base Tractor Loader Backhoe**

F-J-LE3	72530384	4WD Platform Tractor with Joystick Includes DL95 Loader and CB65 Backhoe completely assembled	19,539.00

Note: For Additional Loader Options, Refer to Implements Price List Revision

*** ALL Tractors will be charged $135 for Assembly**

TIRES & WHEELS — GROUP 02

NOTE: See Dealer / Field Installed Accessories for list of Tires & Wheels available as Loose Accessory orders. Tire and wheel options ordered with the tractor and not subject to availability can be returned via RGA. Contact Dealer Central with questions.

	72530281M	Front: 18x8.50-10 AG Rear: 26x12.00-12 AG	148 669.00
	72530282M	Front: 18x8.50-10 Turf Rear: 26x12.00-12 Turf	140 599.00
	72530283M	Front: 18x8.50-10 Industrial Rear: 26x12.00-12 Industrial	719.00

BACKHOE OPTIONS — GROUP 03

	72533783ML	10-inch Bucket with 2 Teeth	359.00
	72533784ML	12-inch Bucket with 3 Teeth	409.00

FRENCH OPERATOR'S MANUAL — GROUP 04

	72530175	French Operator's Manual	No Charge

MASSEY FERGUSON®

RESERVED

MF 1526

(F.O.B. Port of Entry)

MASSEY FERGUSON®

FEATURES

POWER TRAIN

- Engine:
  24.0 Rated HP Iseki 3-Cylinder Diesel
  91.4 cu. in. (1.5 l) Displacement
  24 Gross HP @ 2600 RPM
  20.1 PTO HP @ 2600 RPM - Hydro
  Dry Single Element Air Cleaner
  EPA and CARB Certified
  Emission Standard Category:
  Tier 4 Final

- Transmission:
  Hydrostatic: with 3 Non-Synchronized Ranges and Cruise Control with Auto-Throttle Control
- Wet Disc Brakes, Parking Brake
- Differential Lock: Foot Pedal Operated

- PTO:
  Rear - 540 RPM Independent Electro Hydraulic
  Mid - Optional 2000 RPM Independent through Parts

HYDRAULIC SYSTEM:

- 3-Point Hitch Cat I with Position and Response Control
- Lift Capacity @ 24 inches: 992 lbs
- Dual Engine Driven Gear Pumps
- Flow @ Remotes 5.5 GPM (20.8 LPM)
- Power Steering Pump 3.2 GPM (12.1 LPM)
- Total Combined 8.7 GPM (32.9 LPM)
- Can Support Single Rear Remote Valve (Optional, Field Installed)

INSTRUMENTS:

- Tachometer and Hour Meter
- Temperature and Fuel Gauges
- Warning Lights: High Beam indicator, Battery Charge (alt) Indicator and Flasher Indicators
- Key Operated Electronic Fuel Shutoff and Glow Plug Control

OTHER STANDARD FEATURES:

- Turn Signals, Flashers, Tail Lights, SMV Emblem
- Turn Buckle Stabilizers
- Hydrostatic Power Steering
- Foot Accelerator
- Hand Accelerator
- 2 Post Folding Rops and Retractable Seat Belt
- Removable Side Panels
- Side Shift Control Levers
- Adjustable Suspension Seat with Arm Rests
- Tilt Hood

- ***Note: 3-Point Backhoe Installation Voids Warranty***

IMPLEMENT FEATURES

MF L100E LOADER

- One Piece Main Frame with Tapered Arms and Single Cross Member
- Quick Attach Loader Frame Mount with Pin Lock
- Built-in Parking Stands
- (2) 1.78 inch Double Acting Lift Cylinders
- (2) 1.78 inch Double Acting Bucket Cylinders
- Regenerative Hydraulics for Simultaneous Operation of Lift/Lower and Curl/Dump Functions
- Hydraulic Lines Routed Inside Main Frame for Protection and Visibility
- Galvanized Steel Bushings with Recessed Grease Points
- 54-inch Standard Duty Pin-Type Bucket
- Grille Guard Standard

- Fits MF1526 with AG, Turf, or R4 Tires
- Maximum Lift Height: 83 Inches @ Pivot Pin
- Lift Capacity to Full Height @ 19.5 inches Forward of Pivot Pin: 820 lbs
- Breakout Force: 1750 lbs @ Pivot Pin
- Rated Hydraulic Pressure: 2132 PSI
- Maximum Roll Back Angle: 32 degrees
- Dump Angle: 42 degrees

MF 1526

MASSEY FERGUSON®

Order Code	Catalog Number	Description	Approx. Weight	List Price
		ORDER TRACTOR THEN ORDER REQUIRED TIRES		
BASE MACHINE				**GROUP 01**
MF1526H		**MF1526H Base Tractor**		
F-H-RE3	72530241	4wd Platform with Hydrostatic Transmission		14,669.00
LOADER				**GROUP 02**
	72533953	MFL100E Loader Package Includes: Loader, Mounting Kit, and Direct Control Valve Kit		3,179.00

Note: For Additional Loader Options, Refer to Implements Price List Revision

*** ALL Tractors will be charged $325 for Assembly**

TIRES & WHEELS - Required				**GROUP 03**
		Ag Tires Options		
	72530372M	Front: 7-12 4PR Dyna Torq II Rear: 35 x 12.00-16.5 4PR Tru Power		1,299.00
	72530242M	Front: 7-12 4PR Tru Power. Rear: 9.5-16 6PR Hi Traction Lug		1,079.00
		Turf Tires Option		
	72530371M	Front: 25 x 8.50-14 4PR M-T Rear: 36 x13.50-15 4PR M-T		1,239.00
		Industrial Tires Option		
	72530370M	Front: 25 x 8.50-14 6PR SS Rear: 14-17NHS 6PR SS		1,609.00
BUCKET OPTIONS - Recommended with Loader Packages				**GROUP 04**
	72533916ML	54-inch Pin Type Material Bucket		399.00
LOADER ACCESSORIES - Quick Attach can be Ordered with Bucket				**GROUP 05**
	72533918ML	Bucket Quick Attach Tool Carrier Kit Allows Fast Interchange of Buckets and Other Accessories without the use of Tools		269.00

MF 1726E

(F.O.B. Port of Entry)

MASSEY FERGUSON®

TRACTOR FEATURES

POWER TRAIN

- Engine:
  - 24.0 Rated HP Shibaura 3-Cylinder Liquid-Cooled Diesel
  - 1.5L (91.5 Cu. In.) In-Direct Injection System
  - Internal Exhaust Gas Recirculation (iEGR), Electronic Engine Control
  - 21 PTO HP @ 2600 RPM - Gear
  - 20 PTO HP @ 2600 RPM - Hydrostatic
  - Emission Standard Category: Tier 4 Compliant, EPA and CARB Certified
- Single Stage, Dry Element Type Air Cleaner
- Transmission:
  - 9F / 3R Speeds Gear Transmission
  - Hydrostatic: 3 Non-Synchronized Ranges
- Sealed Wet Disc Brakes
- Pedal Operated Rear Differential Lock
- PTO:
  - Rear - 540 RPM Transmission Driven PTO with Overrunning Clutch
  - Not Mid PTO Capable

HYDRAULIC SYSTEM

- 3-Point Hitch Cat I with Position Control
- Lift Capacity @ Hitch Point: 2205 lbs (1000 kg)
  - @ 24 inches: 1600 lbs (725 kg)
- Dual Engine Driven Gear Pump
- Flow at Remotes 6.7 GPM (25.5 LPM)
- Power Steering Pump 3.8 GPM (14.4 LPM)
- Total Combined Flow 10.5 GPM (39.9 LPM)
- Can Support up to 2 Rear Remote Valves (Optional, Dealer Installed)

INSTRUMENTS

- Tachometer and Hour Meter
- Temperature Warning Light
- RPM, Fuel and Hour Meter Gauges
- Warning Lights: High Beam Indicator, Engine Oil Pressure, PTO Engagement, Battery Charge (alt) Indicator, Glow Plug Indicator and Flasher Indicators
- Key Operated Electronic Fuel Shutoff and Glow Plug Control
- Regen Lights

OTHER STANDARD FEATURES

- Steel Tilt-up Hood
- Adjustable Spring Suspension Seat
- 2 Post Folding ROPS and Retractable Seat Belt
- Turn Signals, Flashers, Tail Lights and SMV Emblem
- 2 Headlights

- ***Note: 3-Point Backhoe Installation Voids Warranty***

IMPLEMENT FEATURES

MF L105E LOADER

- One Piece Main Frame with Tapered Arms and Single Cross Member
- Quick Attach Loader Frame Mount with Pin Lock
- Built-in Parking Stands
- (2) 2.0 inch Double Acting Lift Cylinders
- (2) 2.2 inch Double Acting Bucket Cylinders
- Hydraulic Lines Routed Inside Main Frame for Protection and Visibility
- Galvanized Steel Bushings with Recessed Grease Points
- Skid Steer or Pin-Type Implement Attachments
- Grille Guard Standard
- Fits all MF1700E Series Economy Compact Tractor Models with R1 AG, R3 Turf or R4 Industrial Tires
- Maximum Lift Height: 95.7 inches at Pivot
- Lift Capacity to Full Height @ 19.6 inches Forward of Pivot Pin: 830 lbs
- Breakout Force: 1460 lbs
- Rated Hydraulic Pressure: 2132 PSI

MF 1726E

MASSEY FERGUSON®

Order Code	Catalog Number	Description	Approx. Weight	List Price

ORDER TRACTOR ONLY OR
TRACTOR AND LOADER BELOW
THEN ORDER ONE CODE FROM GROUP 03 THROUGH 05 AS REQUIRED

BASE MACHINE — GROUP 01

MF1726E		**MF1726E Base Tractor**	
F-RE3	72530407	4wd Platform Gear 9x3 Transmission	12,949.00
MF1726EH		**MF1726EH Base Tractor**	
F-H-RE3	72530408	4wd Platform Hydrostatic Transmission.	14,199.00

LOADER — GROUP 02

	72533952	MFL105E Loader Package	3,979.00
		Includes: Mounting Kit with Joystick and Grille Guard	

Note: For Additional Loader Options, Refer to Implements Price List Revision

*** ALL Tractors will be charged $325 for Assembly**

MASSEY FERGUSON®

Order Code	Catalog Number	Description	Approx. Weight	List Price
TIRES & WHEELS - Required				**GROUP 03**
		AG Tires Options		
	72530436	Front: 7-16 6PR R1 Rear: 11.2 x 24 4PR R1 Adjustable		1,719.00
		Turf Tires Options		
	72530253	Front: 27 x 8.50-15 4PR Rear: 38 x 14.00-20 4PR		1,589.00
		Industrial Tires Options		
	72530254	Front: 27 x 8.50-15 6PR SS Rear: 15 x 19.5 6PR SS		1,789.00
BUCKET OPTIONS - Recommended with Loader Packages				**GROUP 04**
	72533678ML	60-inch Skid Steer Type Material Bucket (Requires 72533709M Quick Attach Tool Carrier Kit)		549.00
	72533675ML	60-inch Pin Type Material Bucket		669.00
LOADER ACCESSORIES - The Skid Steer Quick Attach is Required with the Skid Steer Bucket				**GROUP 05**
	72533709ML	Skid Steer Type Bucket Quick Attach Tool Carrier Kit		559.00

MF 1734E

MASSEY FERGUSON®

(F.O.B. Port of Entry)

TRACTOR FEATURES

POWER TRAIN

- Engine:
  - 34.0 Rated HP Shibaura 3-Cylinder Liquid-Cooled Diesel
  - 1.5L (91.5 Cu. In.) Turbocharged, In-Direct Injection System
  - Internal Exhaust Gas Recirculation (iEGR), Diesel Oxidation Catalyst (DOC), Regenerating Diesel Particulate Filter (DPF), Electronic Engine Control
  - 29.0 PTO HP @ 2600 RPM - Gear
  - 27.2 PTO HP @ 2600 RPM - Hydrostatic
  - Emission Standard Category: Tier 4 Compliant, EPA and CARB Certified
- Single Stage, Dry Element Type Air Cleaner
- Transmission:
  - 9F / 3R Speeds Gear Transmission
  - Hydrostatic: 3 Non-Synchronized Ranges
- Sealed Wet Disc Brakes
- Pedal Operated Rear Differential Lock
- PTO:
  - Rear - 540 RPM Transmission Driven PTO with Overrunning Clutch
  - Not Mid PTO Capable

HYDRAULIC SYSTEM

- 3-Point Hitch Cat I with Position Control
- Lift Capacity @ Hitch Point: 2205 lbs (1000 kg)
  - @ 24 inches: 1600 lbs (725 kg)
- Dual Engine Driven Gear Pump
- Flow at Remotes 6.7 GPM (25.5 LPM)
- Power Steering Pump 3.8 GPM (14.4 LPM)
- Total Combined Flow 10.5 GPM (39.9 LPM)
- Can Support up to 2 Rear Remote Valves (Optional, Dealer Installed)

INSTRUMENTS

- Tachometer and Hour Meter
- Temperature Warning Light
- RPM, Fuel and Hour Meter Gauges
- Warning Lights: High Beam Indicator, Engine Oil Pressure, PTO Engagement, Battery Charge (alt) Indicator, Glow Plug Indicator and Flasher Indicators
- Key Operated Electronic Fuel Shutoff and Glow Plug Control
- Regen Lights

OTHER STANDARD FEATURES

- Steel Tilt-up Hood
- Adjustable Spring Suspension Seat
- 2 Post Folding ROPS and Retractable Seat Belt
- Turn Signals, Flashers, Tail Lights and SMV Emblem
- 2 Headlights

- ***Note: 3-Point Backhoe Installation Voids Warranty***

IMPLEMENT FEATURES

MF L105E LOADER

- One Piece Main Frame with Tapered Arms and Single Cross Member
- Quick Attach Loader Frame Mount with Pin Lock
- Built-in Parking Stands
- (2) 2.0 inch Double Acting Lift Cylinders
- (2) 2.2 inch Double Acting Bucket Cylinders
- Hydraulic Lines Routed Inside Main Frame for Protection and Visibility
- Galvanized Steel Bushings with Recessed Grease Points
- Skid Steer or Pin-Type Implement Attachments
- Grille Guard Standard
- Fits all MF1700E Series Economy Compact Tractor Models with R1 AG, R3 Turf or R4 Industrial Tires
- Maximum Lift Height: 95.7 inches at Pivot
- Lift Capacity to Full Height @ 19.6 inches Forward of Pivot Pin: 830 lbs
- Breakout Force: 1460 lbs
- Rated Hydraulic Pressure: 2132 PSI

MASSEY FERGUSON®

Order Code	Catalog Number	Description	Approx. Weight	List Price

ORDER TRACTOR ONLY OR
TRACTOR AND LOADER BELOW
THEN ORDER ONE CODE FROM GROUP 03 THROUGH 05 AS REQUIRED

BASE MACHINE — GROUP 01

MF1734E		**MF1734E Base Tractor**	
F-RE3	72530356	4wd Platform Gear 9x3 Transmission	15,159.00
MF1734EH		**MF1734EH Base Tractor**	
F-H-RE3	72530355	4wd Platform Hydrostatic Transmission.	16,409.00

LOADER — GROUP 02

	72533952	MFL105E Loader Package	3,979.00
		Includes: Mounting Kit with Joystick and Grille Guard	

Note: For Additional Loader Options, Refer to Implements Price List Revision

*** ALL Tractors will be charged $325 for Assembly**

Order Code	Catalog Number	Description	Approx. Weight	List Price
TIRES & WHEELS - Required				**GROUP 03**
		AG Tires Options		
	72530436	Front: 7-16 6PR R1 Rear: 11.2 x 24 4PR R1 Adjustable		1,719.00
		Turf Tires Options		
	72530253	Front: 27 x 8.50-15 4PR Rear: 38 x 14.00-20 4PR		1,589.00
		Industrial Tires Options		
	72530254	Front: 27 x 8.50-15 6PR SS Rear: 15 x 19.5 6PR SS		1,789.00
BUCKET OPTIONS - Recommended with Loader Packages				**GROUP 04**
	72533678ML	60-inch Skid Steer Type Material Bucket (Requires 72533709M Quick Attach Tool Carrier Kit)		549.00
	72533675ML	60-inch Pin Type Material Bucket		669.00
LOADER ACCESSORIES - The Skid Steer Quick Attach is Required with the Skid Steer Bucket				**GROUP 05**
	72533709ML	Skid Steer Type Bucket Quick Attach Tool Carrier Kit		559.00

MF 1739E

(F.O.B. Port of Entry)

MASSEY FERGUSON®

TRACTOR FEATURES

POWER TRAIN

- Engine:
  - 38.5 Rated HP Shibaura 3-Cylinder Liquid-Cooled Diesel
  - 1.5L (91.5 Cu. In.) Turbocharged, In-Direct Injection System
  - Internal Exhaust Gas Recirculation (iEGR), Diesel Oxidation Catalyst (DOC), Regenerating Diesel Particulate Filter (DPF), Electronic Engine Control
  - 32.7 PTO HP @ 2600 RPM - Gear
  - 30.9 PTO HP @ 2600 RPM - Hydrostatic
  - Emission Standard Category: Tier 4 Compliant, EPA and CARB Certified
- Single Stage, Dry Element Type Air Cleaner
- Transmission:
  - 9F / 3R Speeds Gear Transmission
  - Hydrostatic: 3 Non-Synchronized Ranges
- Sealed Wet Disc Brakes
- Pedal Operated Rear Differential Lock
- PTO:
  - Gear: Rear - 540 RPM Independent PTO
  - HST: Rear - 540 RPM Transmission Driven PTO with Overrunning Clutch
  - Not Mid PTO Capable

HYDRAULIC SYSTEM

- 3-Point Hitch Cat I with Position Control
- Lift Capacity @ Hitch Point: 2205 lbs (1000 kg) @ 24 inches: 1600 lbs (725 kg)
- Flow at Remotes 7.2 GPM (27.3 LPM)
- Power Steering Pump 4.1 GPM (15.4 LPM)
- Total Combined Flow 11.3 GPM (42.7 LPM)
- Can Support up to 2 Rear Remote Valves (Optional, Dealer Installed)

INSTRUMENTS

- Tachometer and Hour Meter
- Temperature Warning Light
- RPM, Fuel and Hour Meter Gauges
- Warning Lights: High Beam Indicator, Engine Oil Pressure, PTO Engagement, Battery Charge (alt) Indicator, Glow Plug Indicator and Flasher Indicators
- Key Operated Electronic Fuel Shutoff and Glow Plug Control
- Regen Lights

OTHER STANDARD FEATURES

- Steel Tilt-up Hood
- Adjustable Spring Suspension Seat
- 2 Post Folding ROPS and Retractable Seat Belt
- Turn Signals, Flashers, Tail Lights and SMV Emblem
- 2 Headlights

- ***Note: 3-Point Backhoe Installation Voids Warranty***

IMPLEMENT FEATURES

MF L105E LOADER

- One Piece Main Frame with Tapered Arms and Single Cross Member
- Quick Attach Loader Frame Mount with Pin Lock
- Built-in Parking Stands
- (2) 2.0 inch Double Acting Lift Cylinders
- (2) 2.2 inch Double Acting Bucket Cylinders
- Hydraulic Lines Routed Inside Main Frame for Protection and Visibility
- Galvanized Steel Bushings with Recessed Grease Points
- Skid Steer or Pin-Type Implement Attachments
- Grille Guard Standard
- Fits all MF1700E Series Economy Compact Tractor Models with R1 AG, R3 Turf or R4 Industrial Tires
- Maximum Lift Height: 95.7 inches at Pivot
- Lift Capacity to Full Height @ 19.6 inches Forward of Pivot Pin: 830 lbs
- Breakout Force: 1460 lbs
- Rated Hydraulic Pressure: 2132 PSI

Order Code	Catalog Number	Description	Approx. Weight	List Price

ORDER TRACTOR ONLY OR
TRACTOR AND LOADER BELOW
THEN ORDER ONE CODE FROM GROUP 03 THROUGH 05 AS REQUIRED

BASE MACHINE — GROUP 01

MF1739E		**MF1739E Base Tractor**	
F-G-RE3	72530357	4wd Platform Gear 9x3 Transmission	17,159.00
MF1739EH		**MF1739EH Base Tractor**	
F-H-RE3	72530358	4wd Platform Hydrostatic Transmission.	18,409.00

LOADER — GROUP 02

	72533952	MFL105E Loader Package	3,979.00
		Includes: Mounting Kit with Joystick and Grille Guard	

Note: For Additional Loader Options, Refer to Implements Price List Revision

*** ALL Tractors will be charged $325 for Assembly**

Order Code	Catalog Number	Description	Approx. Weight	List Price
TIRES & WHEELS - Required				**GROUP 03**
		AG Tires Options		
	72530436	Front: 7-16 6PR R1 Rear: 11.2 x 24 4PR R1 Adjustable		1,719.00
		Turf Tires Options		
	72530253	Front: 27 x 8.50-15 4PR Rear: 38 x 14.00-20 4PR		1,589.00
		Industrial Tires Options		
	72530254	Front: 27 x 8.50-15 6PR SS Rear: 15 x 19.5 6PR SS		1,789.00
BUCKET OPTIONS - Recommended with Loader Packages				**GROUP 04**
	72533678ML	60-inch Skid Steer Type Material Bucket (Requires 72533709M Quick Attach Tool Carrier Kit)		549.00
	72533675ML	60-inch Pin Type Material Bucket		669.00
LOADER ACCESSORIES - The Skid Steer Quick Attach is Required with the Skid Steer Bucket				**GROUP 05**
	72533709ML	Skid Steer Type Bucket Quick Attach Tool Carrier Kit		559.00

MASSEY FERGUSON®

RESERVED

MF 1736

(F.O.B. Port of Entry)

MASSEY FERGUSON®

TRACTOR FEATURES

POWER TRAIN

- Engine:
  36.2 Rated HP Mitsubishi 3-Cylinder liquid cooled Diesel, 1.7L (101 cu in) Direct Injection, Turbocharged and Intercooled, Electronic Engine Control
  27.5 PTO HP @ 2500 RPM - Shuttle
  26.3 PTO HP @ 2500 RPM - Hydrostatic
  Emission Standard Category: Tier 4
- Dual Element Dry Type Air Cleaner
- Transmission:
  12F/12R Power Shuttle with 4 Synchronized Gears and 3 Ranges.
- Servo-HST Electronic Hydrostatic Transmission with 3 Ranges, Cruise Control, Stall Guard, Max Speed Control and Response Control
- Sealed Wet Disc Brakes
- Pedal Operated Rear Differential Lock
- PTO:
  Rear - 540 RPM Independent Electro Hydraulic
  Mid - Optional 2000 RPM Independent

HYDRAULIC SYSTEM

- 3-Point Hitch Cat I with Position Control Standard, Draft Control Optional
- Lift Capacity @ 24 inches - 2,535 lb (1150 kg)
- Telescopic Stabilizers
- Telescopic Draft Link Ends
- Dual Engine Driven Gear Pump
- Flow at Remotes 11.6 GPM (43.8 LPM)
- Hydrostatic Power Steering
- One Rear Remote Valve Standard on Cab Models, up to 3 Possible. Loader Joystick Standard

INSTRUMENTS

- Combination Digital and Analog Front Dash Display
- Tachometer and Hour Meter
- Temperature and Fuel Gauges
- Warning Lights: High Beam Indicator, Engine Oil Pressure, PTO Engagement, Battery Charge (alt) Indicator, Glow Plug Indicator and Flasher Indicators
- Key Operated Electronic Fuel Shutoff and Glow Plug Control

OTHER STANDARD FEATURES

- ISO Mounted Flat Platform w/ Molded Rubber Floor Mat
- One Piece Tilt-up Hood
- 3 Position Tilt Steering
- Deluxe Adjustable Suspension Seat with Arm Rest
- 2 Post Folding ROPS and Retractable Seat Belt
- Turn Signals, Flashers, Tail Lights and SMV Emblem
- 4 Headlights

CAB FEATURES

- Heating and Air Conditioning
- Wired for Radio and Speakers
- Front and Rear Wiper / Washer
- 2 Front Work Lights
- 2 Rear Work Lights
- Rear and Side opening Windows
- Right and Left Entry Doors
- Right and Left External Mirrors
- Deluxe Digital Display with Ground Speed, Engine Coolant, Temperature, Fuel Level & Diagnostic Readout
- ROPS Certified
- Recirculation Filter

- ***Note: 3-Point Backhoe Installation Voids Warranty***

- ***Note: MF1736L with 4238082 MFDL120 Loader package is <u>Not</u> Compatible with MF1705 Mid Mount Mower; however, it is Compatible with MFDL125 Loader package with Industrial R4 Tire 7496747M Only.***

IMPLEMENT FEATURES

MF DL125 LOADER

- One Piece Main Frame with Tapered Arms and Single Cross Member
- Quick Attach Loader Frame Mount with Pin Lock
- Built-in Parking Stands
- (2) 2.4 inch Double Acting Lift Cylinders
- (2) 2.4 inch Double Acting Bucket Cylinders
- Hydraulic Lines Routed Inside Main Frame for Protection and Visibility
- 3rd Function Capable, Soft-Drive Capable
- Galvanized Steel Bushings with Recessed Grease Points
- Universal Skid Steer Implement Attachment
- Grille Guard Standard
- Fits MF1736 and MF1742 Compact Tractor Models with R1 AG, R3 Turf, or R4 Industrial Tires
- Maximum Lift Height: 102.4 Inches at Pivot
- Lift Capacity to Full Height @ 19.6 inches Forward of Pivot Pin: 1300 lbs
- Breakout Force: 2190 lbs
- Rated Hydraulic Pressure: 2277 PSI

MF 1736

MASSEY FERGUSON®

Order Code	Catalog Number	Description	Approx. Weight	List Price

ORDER TRACTOR ONLY OR
TRACTOR AND LOADER BELOW
THEN ORDER ONE CODE FROM GROUP 03 THROUGH 04 AS REQUIRED

BASE MACHINE — GROUP 01

MF1736		**MF1736 Power Shuttle Tractor**	
F-P-RE3-J	72530286	4wd Platform Power Shuttle 12x12 . . . . . Factory Installed Joystick with Mid-Coupler	21,409.00
F-P-V-CYE3-J	72530288	4wd Cab Power Shuttle 12x12 with 1 Rear Remote . . . . . and Factory Installed Joystick with Mid-Coupler	29,149.00
MF1736H		**MF1736 Hydrostatic Tractor**	
F-H-RE3-J	72530287	4wd Platform HST with Factory Installed . . . . . Joystick with Mid-Coupler	22,079.00
F-H-V-CYE3-J	72530289	4wd Cab HST with Factory Installed 1 Rear Remote . . . . . and Factory Installed Joystick with Mid-Coupler	29,829.00

LOADER — GROUP 02

	72533740	MFDL125 Loader Package, Skid Steer Attach . . . . . Includes: Mounting Kit, Grille Guard, and Hose Kit	3,919.00

Note: For Additional Loader Options, Refer to Implements Price List Revision

*** ALL Tractors will be charged $325 for Assembly**

Order Code	Catalog Number	Description	Approx. Weight	List Price

TIRES & WHEELS - Required — GROUP 03

NOTE: See Dealer / Field Installed Accessories for list of Tires & Wheels available as Loose Accessory orders. Tire and wheel options ordered with the tractor and not subject to availability can be returned via RGA. Contact Dealer Central with questions.

		AG Tires Options	
	7496701M	Front: 8-16 6 PR R1 HTL Rear: 12.4x24 6 PR R1 HTL Adjustable	2,019.00
	7140701M	Front: 8-16 6 PR R1 HTL Rear: 13.6x24 6 PR R1 HTL Adjustable	2,119.00
		Turf Tires Options	
	7496723M	Front: 27x8.50-15 4 PR MT Rear: 41x14.00-20 4 PR MT	1,559.00
		Industrial Tires Options	
	7496745M	Front: 10-16.5 6 PR SS TL Rear: 14.9-24 6 PR R4 Adjustable	2,189.00
	7498710M	Front: 10-16.5 6 PR Rear: 17.5L-24 6P R4 Adjustable	2,439.00
	7496747M	Front: 25x8.5-14 6PR SS Rear: 15x19.5 6PR SS	1,759.00

BUCKET OPTIONS - Recommended with Loader Packages — GROUP 04

	72533679ML	66-inch Skid Steer Bucket 228	529.00
	72533680ML	72-inch Skid Steer Bucket 228	569.00

MASSEY FERGUSON®

RESERVED

MF 1742

(F.O.B. Port of Entry)

MASSEY FERGUSON®

TRACTOR FEATURES

POWER TRAIN

- Engine:
  41.6 Rated HP Mitsubishi 3-Cylinder liquid cooled Diesel, 1.7L (101 cu in) Direct Injection, Turbocharged and Intercooled, Electronic Engine Control
  32.8 PTO HP @ 2500 RPM - Shuttle
  31.6 PTO HP @ 2500 RPM - Hydrostatic
  Emission Standard Category: Tier 4
- Dual Element Dry Type Air Cleaner
- Transmission:
  12F/12R Power Shuttle with 4 Synchronized Gears and 3 Ranges.
- Servo-HST Electronic Hydrostatic Transmission with 3 Ranges, Cruise Control, Stall Guard, Max Speed Control and Response Control
- Sealed Wet Disc Brakes
- Pedal Operated Rear Differential Lock
- PTO:
  Rear - 540 RPM Independent Electro Hydraulic
  Mid - Optional 2000 RPM Independent

HYDRAULIC SYSTEM

- 3-Point Hitch Cat I with Position Control Standard, Draft Control Optional
- Lift Capacity @ 24 inches - 2,535 lb (1150 kg)
- Telescopic Stabilizers
- Telescopic Draft Link Ends
- Dual Engine Driven Gear Pump
- Flow at Remotes 11.6 GPM (43.8 LPM)
- Hydrostatic Power Steering
- One Rear Remote Valve Standard on Cab Models, up to 3 Possible. Loader Joystick Standard

INSTRUMENTS

- Combination Digital and Analog Front Dash Display
- Tachometer and Hour Meter
- Temperature and Fuel Gauges
- Warning Lights: High Beam Indicator, Engine Oil Pressure, PTO Engagement, Battery Charge (alt) Indicator, Glow Plug Indicator and Flasher Indicators
- Key Operated Electronic Fuel Shutoff and Glow Plug Control

OTHER STANDARD FEATURES

- ISO Mounted Flat Platform w/ Molded Rubber Floor Mat
- One Piece Tilt-up Hood
- 3 Position Tilt Steering
- Deluxe Adjustable Suspension Seat with Arm Rest
- 2 Post Folding ROPS and Retractable Seat Belt
- Turn Signals, Flashers, Tail Lights and SMV Emblem
- 4 Headlights

CAB FEATURES

- Heating and Air Conditioning
- Wired for Radio and Speakers
- Front and Rear Wiper / Washer
- 2 Front Work Lights
- 2 Rear Work Lights
- Rear and Side opening Windows
- Right and Left Entry Doors
- Right and Left External Mirrors
- Deluxe Digital Display with Ground Speed, Engine Coolant, Temperature, Fuel Level & Diagnostic Readout
- ROPS Certified
- Recirculation Filter

- ***Note: 3-Point Backhoe Installation Voids Warranty***

IMPLEMENT FEATURES

MF DL125 LOADER

- One Piece Main Frame with Tapered Arms and Single Cross Member
- Quick Attach Loader Frame Mount with Pin Lock
- Built-in Parking Stands
- (2) 2.4 inch Double Acting Lift Cylinders
- (2) 2.4 inch Double Acting Bucket Cylinders
- Hydraulic Lines Routed Inside Main Frame for Protection and Visibility
- 3rd Function Capable, Soft-Drive Capable
- Galvanized Steel Bushings with Recessed Grease Points
- Universal Skid Steer Implement Attachment
- Grille Guard Standard
- Fits MF1736 and MF1742 Compact Tractor Models with R1 AG, R3 Turf, or R4 Industrial Tires
- Maximum Lift Height: 102.4 Inches at Pivot
- Lift Capacity to Full Height @ 19.6 inches Forward of Pivot Pin: 1300 lbs
- Breakout Force: 2190 lbs
- Rated Hydraulic Pressure: 2277 PSI

Order Code	Catalog Number	Description	Approx. Weight	List Price

ORDER TRACTOR ONLY OR
TRACTOR AND LOADER BELOW
THEN ORDER ONE CODE FROM GROUP 03 THROUGH 04 AS REQUIRED

BASE MACHINE — GROUP 01

MF1742 — **MF1742 Power Shuttle Tractor**

F-P-RE3-J	72530290	4wd Platform Power Shuttle 12x12 with. . . . . Factory Installed Joystick with Mid-Coupler	24,299.00
F-P-V-CYE3-J	72530292	4wd Cab Power Shuttle 12x12 with 1 Rear Remote . . . . . and Factory Installed Joystick with Mid-Coupler	32,039.00

MF1742H — **MF1742 Hydrostatic Tractor**

F-H-RE3-J	72530291	4wd Platform HST with Factory Installed . . . . . Joystick with Mid-Coupler	24,969.00
F-H-V-CYE3-J	72530293	4wd Cab HST with Factory Installed 1 Rear Remote. . . . . and Factory Installed Joystick with Mid-Coupler	32,719.00

LOADER — GROUP 02

	72533740	MFDL125 Loader Package, Skid Steer Attach . . . . . Includes: Mounting Kit, Grille Guard, and Hose Kit	3,919.00

Note: For Additional Loader Options, Refer to Implements Price List Revision

*** ALL Tractors will be charged $325 for Assembly**

Order Code	Catalog Number	Description	Approx. Weight	List Price

TIRES & WHEELS - Required — GROUP 03

NOTE: See Dealer / Field Installed Accessories for list of Tires & Wheels available as Loose Accessory orders. Tire and wheel options ordered with the tractor and not subject to availability can be returned via RGA. Contact Dealer Central with questions.

		AG Tires Options	
	7496701M	Front: 8-16 6 PR R1 HTL Rear: 12.4x24 6 PR R1 HTL Adjustable	2,019.00
	7140701M	Front: 8-16 6 PR R1 HTL Rear: 13.6x24 6 PR R1 HTL Adjustable	2,119.00
		Turf Tires Options	
	7496723M	Front: 27x8.50-15 4 PR MT Rear: 41x14.00-20 4 PR MT	1,559.00
		Industrial Tires Options	
	7496745M	Front: 10-16.5 6 PR SS TL Rear: 14.9-24 6 PR R4 Adjustable	2,189.00
	7498710M	Front: 10-16.5 6 PR Rear: 17.5L-24 6P R4 Adjustable	2,439.00
	7496747M	Front: 25x8.5-14 6PR SS Rear: 15x19.5 6PR SS	1,759.00

BUCKET OPTIONS - Recommended with Loader Packages — GROUP 04

	72533679ML	66-inch Skid Steer Bucket	228	529.00
	72533680ML	72-inch Skid Steer Bucket	228	569.00

MASSEY FERGUSON®

RESERVED

MF 1749

(F.O.B. Port of Entry)

MASSEY FERGUSON®

TRACTOR FEATURES

POWER TRAIN

- Engine:
  48.3 Rated HP Mitsubishi 3-Cylinder liquid cooled Diesel, 1.7L (101 cu in) Direct Injection, Turbocharged and Intercooled, Electronic Engine Control
  39 PTO HP @ 2500 RPM - Shuttle
  37.8 PTO HP @ 2500 RPM - Hydrostatic
  Emission Standard Category: Tier 4
- Dual Element Dry Type Air Cleaner
- Transmission:
  12F/12R Power Shuttle with 4 Synchronized Gears and 3 Ranges.
- Servo-HST Electronic Hydrostatic Transmission with 3 Ranges, Cruise Control, Stall Guard, Max Speed Control and Response Control
- Sealed Wet Disc Brakes
- Pedal Operated Rear Differential Lock
- PTO:
  Rear - 540 RPM Independent Electro Hydraulic
  Mid - Optional 2000 RPM Independent

HYDRAULIC SYSTEM

- 3-Point Hitch Cat I with Position Control Standard, Draft Control Optional
- Lift Capacity @ 24 inches - 3,086 lb (1400 kg)
- Telescopic Stabilizers
- Telescopic Draft Link Ends
- Dual Engine Driven Gear Pump
- Flow at Remotes 11.6 GPM (43.8 LPM)
- Hydrostatic Power Steering
- One Rear Remote Valve Standard on Cab Models, up to 3 Possible. Loader Joystick Standard

INSTRUMENTS

- Combination Digital and Analog Front Dash Display
- Tachometer and Hour Meter
- Temperature and Fuel Gauges
- Warning Lights: High Beam Indicator, Engine Oil Pressure, PTO Engagement, Battery Charge (alt) Indicator, Glow Plug Indicator and Flasher Indicators
- Key Operated Electronic Fuel Shutoff and Glow Plug Control

OTHER STANDARD FEATURES

- ISO Mounted Flat Platform w/ Molded Rubber Floor Mat
- One Piece Tilt-up Hood
- 3 Position Tilt Steering
- Deluxe Adjustable Suspension Seat with Arm Rest
- 2 Post Folding ROPS and Retractable Seat Belt
- Turn Signals, Flashers, Tail Lights and SMV Emblem
- 4 Headlights

CAB FEATURES

- Heating and Air Conditioning
- Wired for Radio and Speakers
- Front and Rear Wiper / Washer
- 2 Front Work Lights
- 2 Rear Work Lights
- Rear and Side opening Windows
- Right and Left Entry Doors
- Right and Left External Mirrors
- Deluxe Digital Display with Ground Speed, Engine Coolant, Temperature, Fuel Level & Diagnostic Readout
- ROPS Certified
- Recirculation Filter

- ***Note: 3-Point Backhoe Installation Voids Warranty***

IMPLEMENT FEATURES

MF DL135 LOADER

- One Piece Main Frame with Tapered Arms and Single Cross Member
- Quick Attach Loader Frame Mount with Pin Lock
- Built-in Parking Stands
- (2) 2.75 inch Double Acting Lift Cylinders
- (2) 2.75 inch Double Acting Bucket Cylinders
- Hydraulic Lines Routed Inside Main Frame for Protection and Visibility
- 3rd Function Capable, Soft-Drive Capable
- Galvanized Steel Bushings with Recessed Grease Points
- Universal Skid Steer Implement Attachment
- Grille Guard Standard
- Fits MF1749, 1754, 1758, 1759 Compact Tractor Models with R1 AG, R3 Turf, or R4 Industrial Tires
- Maximum Lift Height: 110.2 Inches at Pivot
- Lift Capacity to Full Height @ 19.6 inches Forward of Pivot Pin: 1760 lbs
- Breakout Force: 2870 lbs
- Rated Hydraulic Pressure: 2277 PSI

Order Code	Catalog Number	Description	Approx. Weight	List Price

ORDER TRACTOR ONLY OR
TRACTOR AND LOADER BELOW
THEN ORDER ONE CODE FROM GROUP 03 THROUGH 04 AS REQUIRED

BASE MACHINE — GROUP 01

MF1749		**MF1749 Power Shuttle Tractor**	
F-P-RE3-J	72530294	4wd Platform Power Shuttle 12x12 with. . . . . Factory Installed Joystick with Mid-Coupler	29,169.00
F-P-V-CYE3-J	72530296	4wd Cab Power Shuttle 12x12 with 1 Rear Remote . . . . . and Factory Installed Joystick with Mid-Coupler	36,729.00
MF1749H		**MF1749H Hydrostatic Tractor**	
F-H-RE3-J	72530295	4wd Platform HST with . . . . . Factory Installed Joystick with Mid-Coupler	29,829.00
F-H-V-CYE3-J	72530297	4wd Cab HST with 1 Rear Remote . . . . . and Factory Installed Joystick with Mid-Coupler	37,389.00

LOADER — GROUP 02

	72533863	MFDL135 Loader Package, Skid Steer Attach . . . . . Includes: Mounting Kit, Grille Guard, and Hose Kit	4,279.00

Note: For Additional Loader Options, Refer to Implements Price List Revision

*** ALL Tractors will be charged $325 for Assembly**

Order Code	Catalog Number	Description	Approx. Weight	List Price

TIRES & WHEELS - Required — GROUP 03

NOTE: See Dealer / Field Installed Accessories for list of Tires & Wheels available as Loose Accessory orders. Tire and wheel options ordered with the tractor and not subject to availability can be returned via RGA. Contact Dealer Central with questions.

AG Tires Options

7498756M	Front: 9.5x16 6PR R1 Rear: 13.6x28 6PR R1 Adjustable	2,339.00
7498767M	Front: 9.5x16 6PR R1 Rear: 16.9x24 6PR R1 Adjustable	2,379.00

Turf Tires Options

7498778M	Front: 27x10.50-15 4 PR Rear: 44x18.00-20 4 PR	2,429.00

Industrial Tires Options

7498710M	Front: 10-16.5 6 PR Rear: 17.5L-24 6 PR R4 Adjustable	2,439.00
7496745M	Front: 10-16.5 6 PR SS TL Rear: 14.9-24 6 PR R4 Adjustable	2,189.00

BUCKET OPTIONS - Recommended with Loader Packages — GROUP 04

72533922ML	72-inch High Volume Skid Steer Material Bucket Pre-Drilled to Accept a Bolt-on Cutting Edge	345	999.00
72533680ML	72-inch Skid Steer Bucket	228	569.00

MASSEY FERGUSON®

RESERVED

MF 1754

(F.O.B. Port of Entry)

MASSEY FERGUSON®

FEATURES

POWER TRAIN

- Engine:
  53.6 Rated HP Mitsubishi 4-Cylinder liquid cooled Diesel, 2.2L (135 cu in) Direct Injection, Turbocharged and Intercooled, Electronic Engine Control
  42.1 PTO HP @ 2500 RPM - Shuttle
  40.9 PTO HP @ 2500 RPM - Hydrostatic
  Emission Standard Category: Tier 4
- Dual Element Dry Type Air Cleaner
- Transmission:
  12F/12R Power Shuttle with 4 Synchronized Gears and 3 Ranges.
- Servo-HST Electronic Hydrostatic Transmission with 3 Ranges, Cruise Control, Stall Guard, Max Speed Control and Response Control
- Sealed Wet Disc Brakes
- Pedal Operated Differential Lock
- PTO:
  Rear - 540 RPM Independent Electro Hydraulic
  Mid - Optional 2000 RPM Independent

HYDRAULIC SYSTEM

- 3-Point Hitch Cat I with Position Control Standard, Draft Control Optional
- Lift Capacity @ 24 inches - 3,086 lb (1400 kg)
- Telescopic Stabilizers
- Telescopic Draft Link Ends
- Dual Engine Driven Gear Pump
- Flow at Remotes 11.6 GPM (43.8 LPM)
- Hydrostatic Power Steering
- One Rear Remote Valve Standard on Cab Models, up to 3 Possible. Loader Joystick Standard

INSTRUMENTS

- Combination Digital and Analog Front Dash Display
- Tachometer and Hour Meter
- Temperature and Fuel Gauges
- Warning Lights: High Beam Indicator, Engine Oil Pressure, PTO Engagement, Battery Charge (alt) Indicator, Glow Plug Indicator and Flasher Indicators
- Key Operated Electronic Fuel Shutoff and Glow Plug Control

OTHER STANDARD FEATURES

- ISO Mounted Flat Platform w/ Molded Rubber Floor Mat
- One Piece Tilt-up Hood
- 3 Position Tilt Steering
- Deluxe Adjustable Suspension Seat with Arm Rest
- 2 Post Folding ROPS and Retractable Seat Belt
- Turn Signals, Flashers, Tail Lights and SMV Emblem
- 4 Headlights

CAB FEATURES

- Heating and Air Conditioning
- Wired for Radio and Speakers
- Front and Rear Wiper / Washer
- 2 Front Work Lights
- 2 Rear Work Lights
- Rear and Side opening Windows
- Right and Left Entry Doors
- Right and Left External Mirrors
- Deluxe Digital Display with Ground Speed, Engine Coolant, Temperature, Fuel Level & Diagnostic Readout
- ROPS Certified
- Recirculation Filter

- ***Note: 3-Point Backhoe Installation Voids Warranty***

IMPLEMENT FEATURES

MF DL135 LOADER

- One Piece Main Frame with Tapered Arms and Single Cross Member
- Quick Attach Loader Frame Mount with Pin Lock
- Built-in Parking Stands
- (2) 2.75 inch Double Acting Lift Cylinders
- (2) 2.75 inch Double Acting Bucket Cylinders
- Hydraulic Lines Routed Inside Main Frame for Protection and Visibility
- 3rd Function Capable, Soft-Drive Capable
- Galvanized Steel Bushings with Recessed Grease Points
- Universal Skid Steer Implement Attachment
- Grille Guard Standard
- Fits MF1749, 1754, 1758, 1759 Compact Tractor Models with R1 AG, R3 Turf, or R4 Industrial Tires
- Maximum Lift Height: 110.2 Inches at Pivot
- Lift Capacity to Full Height @ 19.6 inches Forward of Pivot Pin: 1760 lbs
- Breakout Force: 2870 lbs
- Rated Hydraulic Pressure: 2277 PSI

Order Code	Catalog Number	Description	Approx. Weight	List Price

ORDER TRACTOR ONLY OR
TRACTOR AND LOADER BELOW
THEN ORDER ONE CODE FROM GROUP 03 THROUGH 04 AS REQUIRED

BASE MACHINE — GROUP 01

MF1754 — **MF1754 Power Shuttle Tractor**

F-P-RE3-J	72530385	4wd Platform Power Shuttle 12x12 with. . . . . Factory Installed Joystick with Mid-Coupler	30,449.00
F-P-V-CYE3-J	72530387	4wd Cab Power Shuttle 12x12 with 1 Rear Remote . . . . . and Factory Installed Joystick with Mid-Coupler	38,009.00

MF1754H — **MF1754 Hydrostatic Base Tractor**

F-H-RE3-J	72530386	4wd Platform HST with . . . . . Factory Installed Joystick with Mid-Coupler	31,109.00
F-H-V-CYE3-J	72530388	4wd Cab HST with 1 Rear Remote and. . . . . Factory Installed Joystick with Mid-Coupler	38,659.00

LOADER — GROUP 02

	72533865	MFDL135 Loader Package, Skid Steer Attach . . . . . for Power Shuttle Includes: Mounting Kit, Grille Guard, and Hose Kit	4,279.00
	72533867	MFDL135 Loader Package, Skid Steer Attach, ... for Hydrostatic Transmission Includes: Mounting Kit, Grille Guard, and Hose Kit	4,279.00

Note: For Additional Loader Options, Refer to Implements Price List Revision

*** ALL Tractors will be charged $325 for Assembly**

Order Code	Catalog Number	Description	Approx. Weight	List Price

TIRES & WHEELS - Required — GROUP 03

NOTE: See Dealer / Field Installed Accessories for list of Tires & Wheels available as Loose Accessory orders. Tire and wheel options ordered with the tractor and not subject to availability can be returned via RGA. Contact Dealer Central with questions.

AG Tires Options

7498756M	Front: 9.5x16 6PR R1 Rear: 13.6x28 6PR R1 Adjustable	2,339.00
7498767M	Front: 9.5x16 6PR R1 Rear: 16.9x24 6PR R1 Adjustable	2,379.00

Turf Tires Options

7498778M	Front: 27x10.50-15 4 PR Rear: 44x18.00-20 4 PR	2,429.00

Industrial Tires Options

7498710M	Front: 10-16.5 6 PR Rear: 17.5L-24 6 PR R4 Adjustable	2,439.00
7496745M	Front: 10-16.5 6 PR SS TL Rear: 14.9-24 6 PR R4 Adjustable	2,189.00

BUCKET OPTIONS - Recommended with Loader Packages — GROUP 04

72533922ML	72-inch High Volume Skid Steer Material Bucket Pre-Drilled to Accept a Bolt-on Cutting Edge	345	999.00
72533680ML	72-inch Skid Steer Bucket	228	569.00

MASSEY FERGUSON®

RESERVED

MF 1758

(F.O.B. Port of Entry)

MASSEY FERGUSON®

FEATURES

POWER TRAIN

- Engine:
  59 Rated HP Mitsubishi 4-Cylinder liquid cooled Diesel, 2.2L (135 cu in) Direct Injection, Turbocharged and Intercooled, Electronic Engine Control
  44.4 PTO HP @ 2500 RPM - Hydrostatic
  Emission Standard Category: Tier 4
- Dual Element Dry Type Air Cleaner
- Transmission:
  Servo-HST Electronic Hydrostatic Transmission with 3 Ranges, Cruise Control, Stall Guard, Max Speed Control and Response Control
- Sealed Wet Disc Brakes
- Pedal Operated Differential Lock
- PTO:
  Rear - 540 RPM Independent Electro Hydraulic
  Mid - Optional 2000 RPM Independent

HYDRAULIC SYSTEM

- 3-point Hitch Cat. I/II with Position Control Standard, Draft Control Optional
- Lift Capacity @ 24 inches - 3,086 lb (1400 kg)
- Telescopic Stabilizers
- Telescopic Draft Link Ends
- Dual Engine Driven Gear Pump
- Flow at Remotes 11.6 GPM (43.8 LPM)
- Hydrostatic Power Steering
- One Rear Remote Valve Standard on Cab Models, up to 3 Possible. Loader Joystick Standard

INSTRUMENTS

- Combination Digital and Analog Front Dash Display
- Tachometer and Hour Meter
- Temperature and Fuel Gauges
- Warning Lights: High Beam Indicator, Engine Oil Pressure, PTO Engagement, Battery Charge (alt) Indicator, Glow Plug Indicator and Flasher Indicators
- Key Operated Electronic Fuel Shutoff and Glow Plug Control

OTHER STANDARD FEATURES

- ISO Mounted Flat Platform w/ Molded Rubber Floor Mat
- One Piece Tilt-up Hood
- 3 Position Tilt Steering
- Deluxe Adjustable Suspension Seat with Arm Rest
- 2 Post Folding ROPS and Retractable Seat Belt
- Turn Signals, Flashers, Tail Lights and SMV Emblem
- 4 Headlights

CAB FEATURES

- Heating and Air Conditioning
- Wired for Radio and Speakers
- Front and Rear Wiper / Washer
- 2 Front Work Lights
- 2 Rear Work Lights
- Rear and Side opening Windows
- Right and Left Entry Doors
- Right and Left External Mirrors
- Deluxe Digital Display with Ground Speed, Engine Coolant, Temperature, Fuel Level & Diagnostic Readout
- ROPS Certified
- Recirculation Filter

- ***Note: 3-Point Backhoe Installation Voids Warranty***

IMPLEMENT FEATURES

MF DL135 LOADER

- One Piece Main Frame with Tapered Arms and Single Cross Member
- Quick Attach Loader Frame Mount with Pin Lock
- Built-in Parking Stands
- (2) 2.75 inch Double Acting Lift Cylinders
- (2) 2.75 inch Double Acting Bucket Cylinders
- Hydraulic Lines Routed Inside Main Frame for Protection and Visibility
- 3rd Function Capable, Soft-Drive Capable
- Galvanized Steel Bushings with Recessed Grease Points
- Universal Skid Steer Implement Attachment
- Grille Guard Standard
- Fits MF1749, 1754, 1758, 1759 Compact Tractor Models with R1 AG, R3 Turf, or R4 Industrial Tires
- Maximum Lift Height: 110.2 Inches at Pivot
- Lift Capacity to Full Height @ 19.6 inches Forward of Pivot Pin: 1760 lbs
- Breakout Force: 2870 lbs
- Rated Hydraulic Pressure: 2277 PSI

Order Code	Catalog Number	Description	Approx. Weight	List Price

ORDER TRACTOR ONLY OR
TRACTOR AND LOADER BELOW
THEN ORDER ONE CODE FROM GROUP 03 THROUGH 04 AS REQUIRED

BASE MACHINE — GROUP 01

MF1758H		**MF1758 Hydrostatic Tractor**	
F-H-RE3-J	72530389	4wd Platform Servo HST with . . . . . Factory Installed Joystick with Mid-Coupler	32,729.00
F-H-V-CYE3-J	72530390	4wd Cab Servo HST with 1 Rear Remote and. . . . . Factory Installed Joystick with Mid-Coupler	40,289.00

LOADER — GROUP 02

	72533867	MFDL135 Loader Package, Skid Steer Attach, ... for Hydrostatic Transmission Includes: Mounting Kit, Grille Guard, and Hose Kit	4,279.00

Note: For Additional Loader Options, Refer to Implements Price List Revision

*** ALL Tractors will be charged $325 for Assembly**

Order Code	Catalog Number	Description	Approx. Weight	List Price

TIRES & WHEELS - Required — GROUP 03

NOTE: See Dealer / Field Installed Accessories for list of Tires & Wheels available as Loose Accessory orders. Tire and wheel options ordered with the tractor and not subject to availability can be returned via RGA. Contact Dealer Central with questions.

AG Tires Options

7498756M	Front: 9.5x16 6PR R1 Rear: 13.6x28 6PR R1 Adjustable	2,339.00
7498767M	Front: 9.5x16 6PR R1 Rear: 16.9x24 6PR R1 Adjustable	2,379.00

Turf Tires Options

7498778M	Front: 27x10.50-15 4 PR Rear: 44x18.00-20 4 PR	2,429.00

Industrial Tires Options

7498710M	Front: 10-16.5 6 PR Rear: 17.5L-24 6 PR R4 Adjustable	2,439.00
7496745M	Front: 10-16.5 6 PR SS TL Rear: 14.9-24 6 PR R4 Adjustable	2,189.00

BUCKET OPTIONS - Recommended with Loader Packages — GROUP 04

72533922ML	72-inch High Volume Skid Steer Material Bucket Pre-Drilled to Accept a Bolt-on Cutting Edge	345	999.00
72533680ML	72-inch Skid Steer Bucket	228	569.00

MASSEY FERGUSON®

RESERVED

MF 1759

(F.O.B. Port of Entry)

MASSEY FERGUSON®

FEATURES

POWER TRAIN

- Engine
  59 Rated HP Mitsubishi 4-Cylinder liquid cooled Diesel, 2.2L (135 cu in) Direct Injection, Turbocharged and Intercooled, Electronic Engine Control
  45.6 PTO HP @ 2500 RPM - Shuttle
  Emission Standard Category: Tier 4
- Dual Element Dry Type Air Cleaner
- Transmission
  12Fx12R Power Shuttle with 4 Synchronized Gears and 3 Ranges
- Sealed Wet Disc Brakes
- Pedal Operated Differential Lock
- PTO:
  Rear - 540 RPM Independent Electro Hydraulic

HYDRAULIC SYSTEM

- 3-point Hitch Cat. I/II with Position Control Standard, Draft Control Optional
- Lift Capacity @ 24 inches - 3,307 lb (1500 kg)
- Telescopic Stabilizers
- Telescopic Draft Link Ends
- Dual Engine Driven Gear Pumps
- Flow at Remotes 12.8 GPM (48.6 LPM)
- Hydrostatic Power Steering
- One Rear Remote Valve Standard on Cab Models, up to 3 Possible. Loader Joystick Standard

INSTRUMENTS

- Combination Digital and Analog Front Dash Display
- Tachometer and Hour Meter
- Temperature and Fuel Gauges
- Warning Lights: High Beam Indicator, Engine Oil Pressure, PTO Engagement, Battery Charge (alt) Indicator, Glow Plug Indicator and Flasher Indicators
- Key Operated Electronic Fuel Shutoff and Glow Plug Control

OTHER STANDARD FEATURES

- ISO Mounted Flat Platform w/ Molded Rubber Floor Mat
- One Piece Tilt-up Hood
- 3 Position Tilt Steering
- Deluxe Adjustable Suspension Seat with Arm Rest
- 2 Post Folding ROPS and Retractable Seat Belt
- Turn Signals, Flashers, Tail Lights and SMV Emblem
- 4 Headlights

CAB FEATURES

- Heating and Air Conditioning
- Wired for Radio and Speakers
- Front and Rear Wiper / Washer
- 2 Front Work Lights
- 2 Rear Work Lights
- Rear and Side opening Windows
- Right and Left Entry Doors
- Right and Left External Mirrors
- Deluxe Digital Display with Ground Speed, Engine Coolant, Temperature, Fuel Level & Diagnostic Readout
- ROPS Certified
- Recirculation Filter

- ***Note: 3-Point Backhoe Installation Voids Warranty***

IMPLEMENT FEATURES

MF DL135 LOADER

- One Piece Main Frame with Tapered Arms and Single Cross Member
- Quick Attach Loader Frame Mount with Pin Lock
- Built-in Parking Stands
- (2) 2.75 inch Double Acting Lift Cylinders
- (2) 2.75 inch Double Acting Bucket Cylinders
- Hydraulic Lines Routed Inside Main Frame for Protection and Visibility
- 3rd Function Capable, Soft-Drive Capable
- Galvanized Steel Bushings with Recessed Grease Points
- Universal Skid Steer Implement Attachment
- Grille Guard Standard
- Fits MF1749, 1754, 1758, 1759 Compact Tractor Models with R1 AG, R3 Turf, or R4 Industrial Tires
- Maximum Lift Height: 110.2 Inches at Pivot
- Lift Capacity to Full Height @ 19.6 inches Forward of Pivot Pin: 1760 lbs
- Breakout Force: 2870 lbs
- Rated Hydraulic Pressure: 2277 PSI

Order Code	Catalog Number	Description	Approx. Weight	List Price

ORDER TRACTOR ONLY OR
TRACTOR AND LOADER BELOW
THEN ORDER ONE CODE FROM GROUP 03 THROUGH 04 AS REQUIRED

BASE MACHINE — GROUP 01

MF1759 — **MF1759 Power Shuttle Tractor**

F-P-RE3-J	72530391	4wd Platform Power Shuttle 12x12 with. . . . . Factory Installed Joystick with Mid-Coupler	33,039.00
F-P-V-CYE3-J	72530392	4wd Cab Power Shuttle 12x12 with 1 Rear Remote . . . . . and Factory Installed Joystick with Mid-Coupler	40,599.00

LOADER — GROUP 02

	72533869	MFDL135 Loader Package, Skid Steer Attach . . . . . Includes: Mounting Kit, Grille Guard, and Hose Kit	4,279.00

Note: For Additional Loader Options, Refer to Implements Price List Revision

*** ALL Tractors will be charged $325 for Assembly**

Order Code	Catalog Number	Description	Approx. Weight	List Price

TIRES & WHEELS - Required — GROUP 03

NOTE: See Dealer / Field Installed Accessories for list of Tires & Wheels available as Loose Accessory orders. Tire and wheel options ordered with the tractor and not subject to availability can be returned via RGA. Contact Dealer Central with questions.

		AG Tires Option	
	7600720M	Front: 9.5x16 6PR R1	2,519.00
		Rear: 16.9x26 6PR R1 (Adjustable)	
		Turf Tires Option	
	7498778M	Front: 27x10.50-15 4PR	2,429.00
		Rear: 44x18.00-20 4 PR	
		Industrial Tires Option	
	7600760M	Front: 12-16.5 6 PR R4	2,959.00
		Rear: 18.4-24 8 PR R4 (Adjustable)	

BUCKET OPTIONS - Recommended with Loader Packages — GROUP 04

	72533922ML	72-inch High Volume Skid Steer Material Bucket 345	999.00
		Pre-Drilled to Accept a Bolt-on Cutting Edge	
	72533680ML	72-inch Skid Steer Bucket 228	569.00

MASSEY FERGUSON®

RESERVED

COMPACT TRACTOR

MASSEY FERGUSON®

WHOLEGOODS

DEALER / FIELD INSTALLED ACCESSORIES

Please Order these Items through Dealer Central on a Separate Order from the Tractor Order.

CATALOG NUMBER	DESCRIPTION	GC1705 GC1715	GC1710 GC1720	LIST PRICE
72530393M	3-Point Linkage Kit		X	429.00
72533705M	Grille Guard without Loader	X		139.00
72533706M	Front Weight Bracket Kit (Requires Grille Guard)	X		119.00
72533783M	10-Inch Bucket with 2 Teeth		X	359.00
72533784M	12-Inch Bucket with 3 Teeth		X	409.00
72533785M	16-Inch Bucket with 3 Teeth		X	459.00
72533791M	Stabilizer Street Pads		X	139.00
72533792M	Thumb Kit		X	449.00

CATALOG NUMBER	DESCRIPTION	1726E 1734E 1739E	1736 1742 1749	1754 1758 1759	LIST PRICE
72533930M	Direct Control Hydraulic Valve Kit	X			833.00
72533707M	Grille Guard without Loader	X			159.00
72533709M	Skidsteer Quick Attach Tool Carrier	X			559.00
72533710M	Grille Guard without Loader		X	X	159.00
72533711M	Front Weight Bracket Kit (Requires Grille Guard)		X	X	129.00

CATALOG NUMBER	DESCRIPTION	1526	LIST PRICE
72533929M	Direct Control Hydraulc Valve with Float, for Operation of the Lift/Lower and Curl/Dump Functions (Includes Hoses to Base Loader)	X	716.00
72533916M	54-inch Pin Type Material Bucket	X	399.00
72533918M	Bucket Quick Attach Tool Carrier Kit	X	269.00

PARTS SUPPLIED

DEALER / FIELD INSTALLED ACCESSORIES

Consult your AGCO parts ordering system using oneAGCO Solutions-Online to determine current availability and pricing

CATALOG NUMBER	DESCRIPTION	GC1705 GC1715	GC1710 GC1720	FACTORY CODE	LIST PRICE
4330274M91	Block Heater Kit	X	X	Contact AGCO Parts Division	
4269010A91	Plastic Sunshade - Gray	X	X	Contact AGCO Parts Division	
79018781	Front Weight (Maximum of 6) Requires 72533705M Grille Guard and 72533706M Front Weight Bracket Kit	X	X	Contact AGCO Parts Division	

CATALOG NUMBER	DESCRIPTION	1726E 1734E 1739E	1736	1742	1749	1754	1758	1759	FACTORY CODE
7068818M92	1st Rear Remote Valve Kit Includes Valve and Lever Assemblies	X							Contact AGCO Parts Division
7068833M92	2nd Rear Remote Valve Kit Includes Valve and Lever Assemblies	X							Contact AGCO Parts Division
6255415M95	Rear Remote Valve (One Valve Slice) (Standard on Cab)		X	X	X	X	X	X	Contact AGCO Parts Division
6255416M94	1st Lever Kit Requires one of 6255415M95 (Standard on Cab)		X	X	X	X	X		Contact AGCO Parts Division
6255417M94	2nd Lever Kit Requires two of 6255415M95		X	X	X	X	X		Contact AGCO Parts Division
6255418M94	3rd Lever Kit Requires three of 6255415M95 1st and 2nd Lever Kit		X	X	X	X	X		Contact AGCO Parts Division
6256151M94	1st Lever Kit Requires one of 6255415M95 (Standard on Cab)							X	Contact AGCO Parts Division
6256152M94	2nd Lever Kit Requires two of 6255415M95							X	Contact AGCO Parts Division
6256153M94	3rd Lever Kit Requires three of 6255415M95 1st and 2nd Lever Kit							X	Contact AGCO Parts Division

PARTS SUPPLIED

DEALER / FIELD INSTALLED ACCESSORIES

Consult your AGCO parts ordering system using oneAGCO Solutions-Online to determine current availability and pricing

CATALOG NUMBER	DESCRIPTION	1726E 1734E 1739E	1736	1742	1749	1754	1758	1759	FACTORY CODE
7069242M91	Mid PTO Kit (25 mm Diameter Shaft)		X						Contact AGCO Parts Division
7069243M91	Mid PTO Kit (35 mm Diameter Shaft) **For Front-Mounted Implements only, not Compatible with Mid-Mount Mower**			X	X	X	X		Contact AGCO Parts Division
7067595M91	Draft Control Kit		X	X	X	X	X		Contact AGCO Parts Division
72530329	Category 1 Quick Hitch Note: Implement May Require Adapter Bushings (Not all 3- Point Implements are Compatible with Quick Hitch)		X	X	X	X	X	X	Contact AGCO Parts Division
6241637M91	Power Beyond Plug		X	X	X	X	X	X	Contact AGCO Parts Division
6241534M2	Front Bumper		X	X	X	X	X	X	Contact AGCO Parts Division
4330412M91	Block Heater	X							Contact AGCO Parts Division
4330413M91	Block Heater		X	X	X	X	X	X	Contact AGCO Parts Division
7073150M91	Cold Climate Glow Plug Kit (Extends from 5 to 30 seconds)		X	X	X	X	X	X	Contact AGCO Parts Division
4269010A91	Plastic Sunshade - Gray		X	X	X	X	X	X	Contact AGCO Parts Division
79018831	Rear Wheel Weights 106 lbs each, for R1 and R4 Tires on all Models (excludes 15x19.5 tire option) Weights are Stackable		X	X	X	X	X	X	Contact AGCO Parts Division
79023243	Rear Wheel Weights 80 lbs each, for 41x14.00-20 and 44x18.00-20 Rear R3 Turf Tires. Weights are Stackable		X	X	X	X	X	X	Contact AGCO Parts Division
4283524M2	French Operators Manual	X							Contact AGCO Parts Division
4283525M2	Spanish Operators Manual	X							Contact AGCO Parts Division
4283509M1	French Operators Manual		X	X	X	X	X	X	Contact AGCO Parts Division
4283510M1	Spanish Operators Manual		X	X	X	X	X	X	Contact AGCO Parts Division

PARTS SUPPLIED

DEALER / FIELD INSTALLED ACCESSORIES

Consult your AGCO parts ordering system using oneAGCO Solutions-Online to determine current availability and pricing

CATALOG NUMBER	DESCRIPTION	1526	1529	1532	FACTORY CODE	LIST PRICE
4269010A91	Plastic Sunshade (Gray)	X	X	X	Contact AGCO Parts Division	
3605426M92	Engine Coolant Heater Installed in Freeze Plug Hole in Block	X	X	X	Contact AGCO Parts Division	
6256596M92	Mid PTO Kit 1529 After S/N JUH24002 1532 After S/N JUH54103		X	X	Contact AGCO Parts Division	
6253639M94	Mid PTO Kit 1529 Prior to S/N JUH24002 1532 Prior to S/N JUH54103		X	X	Contact AGCO Parts Division	
6253417M97	Single Spool Valve (3/8" Coupler Included in Kit)		X	X	Contact AGCO Parts Division	
6253425M95	Second Spool Valve (3/8" Couplers Included in Kit) Requires Single Spool Valve		X	X	Contact AGCO Parts Division	
6258119M91	Mid PTO Kit	X			Contact AGCO Parts Division	
4330263M93	Single Spool Rear Remote Hydraulic Valve	X			Contact AGCO Parts Division	

COMPACT TRACTOR TIRES

MASSEY FERGUSON®

WHOLEGOODS

DEALER / FIELD INSTALLED ACCESSORIES

Please Order these Items through Dealer Central on a Separate Order from the Tractor Order.

CATALOG NUMBER	DESCRIPTION	LIST PRICE
72530281AM	Front: 18 x 8.50-10 / Rear: 26 x 12.00-12 AG	779.00
72530282AM	Front: 18 x 8.5-10 / Rear: 26 x 12.00-12 Turf - **Subject to Availability**	709.00
72530283AM	Front: 18 x 8.5-10 / Rear: 26 x 12.00-12 Industrial	839.00
72530370AM	Front: 25x8.50-14 6PR SS / Rear: 14-17NHS 6PR SS	1,889.00
72530371AM	Front: 25x8.50-14 4PR M-T / Rear: 36x13.50-15 4PR M-T	1,459.00
72530372AM	Front: 7-12 4PR Dyna Torq II / Rear: 35x12.00-16.5 4PR Tru Power	1,519.00
72530242AM	Front: 7-12 4 PR Tru Power / Rear: 9.5-16 6 PR Hi Traction Lug	1,269.00
72530436AM	Front: 7-16 6PR R1 / Rear: 11.2 x 24 4PR R1 Adjustable	1,979.00
72530253AM	Front: 27 x 8.50-15 4PR / Rear: 38 x 14.00-20 4PR - **Subject to Availability**	1,829.00
72530254AM	Front: 27 x 8.50-15 6PR SS / Rear: 15 x 19.5 6PR SS	2,059.00
7140701AM	Front: 8-16 6 PR R1 HTL / Rear: 13.6x24 6 PR R1 HTL Adjustable	2,479.00
7496701AM	Front: 8-16 6 PR R1 HTL / Rear: 12.4x24 6 PR R1 HTL Adjustable	2,359.00
7496723AM	Front: 27 x 8.50-15 (4 Ply) / Rear: 41 x 14.00-20 (4 Ply) Turf - **Subject to Availability**	1,829.00
7496747AM	Front: 25 x 8.5-14 (6 Ply) / Rear: 15 x 19.5 (6 Ply) SS Industrial	2,059.00
7496745AM	Front: 10-16.5 (6 Ply) SS TL / Rear: 14.9-24 R4 Adjustable Industrial	2,569.00
7498710AM	Front: 10-16.5 (6 Ply) / Rear: 17.5L-24 (6 Ply) R4 Adjustable Industrial	2,859.00
7498756AM	Front: 9.5x16 6PR R1 / Rear: 13.6x28 6PR R1 Adjustable	2,749.00
7498767AM	Front: 9.5x16 6PR R1 / Rear: 16.9x24 6PR R1 Adjustable	2,789.00
7498778AM	Front: 27 x 10.50-15 (4 Ply) / Rear: 44 x 18.00-20 (4 Ply) Turf - **Subject to Availability**	2,849.00
7600720AM	Front: 9.5x16 6PR R1 / Rear: 16.9x26 6PR R1 Adjustable	2,959.00
7600760AM	Front: 12-16.5 (6 Ply) R4 / Rear: 18.4-24 (8 Ply) R4 Adjustable Industrial	3,479.00

Model	72530281AM 72530282AM 72530283AM	72530370AM 72530371AM 72530372AM 72530242AM	72530436AM 72530253AM 72530254AM	7140701AM 7496701AM 7496723AM 7496747AM	7496745AM 7498710AM 7498756AM 7498767AM	7498778AM	7600720AM 7600760AM
GC1700	X						
MF1526		X					
MF1700E			X				
MF1736 MF1742				X	X		
MF1749 MF1754 MF1758					X	X	
MF1759						X	X

UTILITY TRACTOR TIRES

MASSEY FERGUSON®

WHOLEGOODS

DEALER / FIELD INSTALLED ACCESSORIES

Please Order these Items through Dealer Central on a Separate Order from the Tractor Order.

CATALOG NUMBER	DESCRIPTION	LIST PRICE
7498756AM	Front: 9.5x16 6PR R1 / Rear: 13.6x28 6PR R1 Adjustable	2,749.00
7498767AM	Front: 9.5x16 6PR R1 / Rear: 16.9x24 6PR R1 Adjustable	2,789.00
7498710AM	Front: 10-16.5 (6 Ply) / Rear: 17.5L-24 (6 Ply) R4 Adjustable Industrial	2,859.00
7498778AM	Front: 27 x 10.50-15 (4 Ply) / Rear: 44 x 18.00-20 (4 Ply) Turf - **Subject to Availability**	2,849.00
72530420AM	Front: 9.5L-15 / Rear: 16.9-30 R1	3,659.00
72530421AM	Front: 7.50-18 / Rear: 16.9-30 R1	3,669.00
72530422AM	Front: 10.00-16 / Rear: 18.4-30 R1	4,429.00
72530423AM	Front: 10.00-16 / Rear: 16.9-34 R1	4,309.00
72530414AM	Front: 11.2-24 / Rear: 16.9-30 R1	4,889.00
72530415AM	Front: 12.4-24 / Rear: 18.4-30 R1	5,269.00
72530416AM	Front: 12.4-24 / Rear: 16.9-34 R1	5,419.00
72530417AM	Front: 12.5/80-18 / Rear: 19.5L-24 R4	5,439.00
72530250AM	Front: 9.5-24 / Rear: 16.9-30 R1	4,499.00
72530251AM	Front: 10.5/80-18 / Rear: 19.5L-24 R4	5,319.00
72530266AM	Front: 9.5L-15 / Rear: 16.9-30 R1	3,659.00
72530395AM	Front: 9.5-24 / Rear: 18.4-26	5,269.00
72530396AM	Front: 12.5/80-18 / Rear: 16.9-24	3,359.00

Model	7498756AM 7498767AM 7498710AM 7498778AM	72530420AM	72530421AM	72530422AM 72530423AM	72530414AM 72530417AM	72530416AM 72530415AM	72530250AM 72530251AM 72530266AM	72530395AM 72530396AM
MF2705E MF2706E	X							
MF4607M		X	X		X			
MF4609M MF4610M		X	X	X	X	X		
MF4608							X	
MF4610LP								X

MASSEY FERGUSON®

2600H Series
UTILITY

MASSEY FERGUSON®

MF2604H

(F.O.B. PORT OF ENTRY)

TRACTOR FEATURES

ENGINE SYSTEM
- Simpson 2.6L, T4 Final, EPA & CARB Certified
- 3 Cylinder
- 157.08 cu. in. (2.6 l) Displacement
- 45 (33 kW) PS Gross Engine Horsepower @ 2000 RPM
- 38 (30.14 kW) PTO Horsepower @ 2000 RPM with Live PTO

FRONT AXLE - Two Factory Options
- 2 Wheel Drive with Telescopic Adjustment
  OR
- 4 Wheel Drive with Direct Drive Final Drives

POWER TRAIN
- Transmission - 8x2 Sideshift - Sliding Gear Transmission Shift Control Lever on Right Side and Range Box Shift Control Lever on Left Side
- Rear Axle - Bevel Gear, Single Reduction Type
- Brakes - Independent Drum Type (Dry) with Mechanical Actuation
- Parking Brake - Mechanical Hand Lever

PTO
- Live, 540 RPM, 6 Spline shaft with Dual Stage Dry Clutch

THREE POINT LINKAGE
- Fixed Lower Links with Dual Turnbuckle Adjustment -Category I/II Cross Drilled Ball Ends
- Sway Chain Stabilizers

HYDRAULICS
- Hydrostatic Steering with Separate Reservoir
- Ferguson 3-Point Hitch System
- 3-Point Hitch Pump Flow (4.2 GPM) *
- Draft, Position and Response Control
- Single Spool Valve Included
- Hydraulic Pump Flow 11.2 GPM at Rear Remote *
- Maximum Hydraulic Flow 15.7 GPM (59.5 LPM) (Steering, 3-Point and Auxiliary Combined)

ELECTRICAL
- Headlights
- Single Rear Work Light
- Safety Lights
- 7 Pin ASAE Outlet

OPERATORS ENVIRONMENT
- Straddle Mount
- Grammer Seat that Inclines as it Moves Rearward
- Retractable Seatbelt
- Folding ROPS
- Suspended Foot Pedals
- Ground-Level Fuel Tank

OTHER STANDARD FEATURES
- Tilting One Piece Hood
- Swinging Drawbar
- Tool Box
- Drawbar Clevis

*** Manufacturer's Estimate**

LOADER FEATURES

MFL135E Pin Type Style Loader
- One Piece Main Frame with Tapered Arms and Single Cross Member
- Quick Attach Loader Frame Mount with Pin Lock
- Built-in Parking Stands
- (2) 2.75 inch Double Acting Lift Cylinders
- (2) 2.75 inch Double Acting Bucket Cylinders
- Hydraulic Valves with Integrated Joystick Mount to Right Side Loader Subframe
- Hydraulic Lines Routed Inside Main Frame for Protection and Visibility
- Galvanized Steel Bushings with Recessed Grease Points
- Universal Skid Steer or Pin-Type Implement Attachments
- **Fits all MF2600H Series 2wd Tractors**
- Maximum Lift Height: 110.2 Inches at Pivot
- Lift Capacity to Full Height @ 19.6 inches Forward of Pivot Pin: 1770 lbs
- Breakout Force: 2870 lbs
- Rated Hydraulic Pressure: 2277 PSI
- Grille Guard Standard

MF911X Loader
- One Piece Main Frame with Tapered Arms and Single Cross Member
- Quick Attach Loader Frame Mount with Pin Lock
- Built-in Parking Stands
- (2) 2.4 inch Double Acting Lift Cylinders
- (2) 2.4 inch Double Acting Bucket Cylinders
- Hydraulic Lines Routed Inside Main Frame for Protection and Visibility
- Galvanized Steel Bushings with Recessed Grease Points
- Universal Skid Steer or Euro Hook Type Implement Attachments
- **Fits all MF2600H Series 4wd Tractors**
- Maximum Lift Height: 115 inches at Pivot
- Lift Capacity to Full Height @ 31.5 inches Forward of Pivot Pin: 1510 lbs
- Breakout Force: 2750 lbs
- Rated Hydraulic Pressure: 2755 PS
- Grille Guard Standard

MF2604H

(F.O.B. PORT OF ENTRY)

MASSEY FERGUSON®

Order Code	Catalog Number	Description	List Price

ORDER TRACTOR ONLY OR
TRACTOR AND LOADER BELOW
THEN ORDER ONE CODE FROM GROUP 03 THROUGH 06 AS REQUIRED

MODEL - BASE MACHINE — GROUP 01

MF2604H		**MF2604H Base Tractor (45 Engine HP or 38 PTO HP)**	
WAJ	4330584	2wd, 8 x 2 Sideshift Transmission, Live PTO	$ 16,920.00
WAN	4330585	4wd, 8 x 2 Sideshift Transmission, Live PTO	20,412.00

LOADER PACKAGES — GROUP 02

2WD:

	72533945	MF L135E Loader Package - Pin Type Style . . . . . Includes: Mounting Kit, Grille Guard, and Valve Kit with Hoses	4,139.00

4WD:

	72533946	MF911X Loader Package - Skid Steer Style . . . . . Includes: Mounting Kit, Valve Kit and Grille Guard	6,367.00
	72533947	MF911X Loader Package - Euro Style . . . . . Includes: Mounting Kit, Valve Kit and Grille Guard	6,557.00

Note: For Additional Loader Options, Refer to Implements Price List Revision

All Tractors will be charged $325 for Assembly

WHEELS AND TIRES — GROUP 03

2WD TIRES:

60	4343625	Front: 6 X 16 Pressed Steel Welded . . . . . Rear: 12.4 X 28 R1 Pressed Steel Disc Adjustable Rim	1,615.00
99	4330518	Front: 7.5 x 16 Pressed Steel Welded . . . . . Rear: 13.6 x 28 R1 Pressed Steel Disc Adjustable Rim	1,815.00

4WD TIRES:

61	4343626	Front: 10.5/80-18 R1 Pressed Steel Disc Adjustable Rim Rear: 12.4 X 28 R1 Pressed Steel Disc Adjustable Rim	2,538.00

Order Code	Catalog Number	Description	Approx. Weight (lb.)	List Price
BUCKET OPTIONS - Recommended with Loader Packages				**GROUP 04**
2wd - MFL135E Loader Package:				
	72533677ML	72-inch Pin Type Material Bucket	228	549.00
	72533922ML	72-inch High Volume HD Skid Steer Material Bucket . . . Pre-Drilled to Accept a Bolt-on Cutting Edge (14 cu ft - designed for Compact Loaders) (Requires 72533709ML)	345	999.00
	72533680ML	72-inch Skid Steer Material Bucket . . . . . (Requires 72533709ML)	228	569.00
4wd - MF911X Loader Packages:				
		Skid Steer Style		
	72533683ML	72-inch Skid Steer Material Bucket 180U, 17 cu ft	390	599.00
	72533684ML	84-inch Skid Steer Material Bucket 210U, 19 cu ft	437	759.00
		Euro Style		
	72533685ML	72-inch Euro Style Material Bucket 180U, 17 cu ft.	390	659.00
	72533686ML	84-inch Euro Style Material Bucket 210U, 19 cu ft.	437	839.00
GRILLE GUARD - OPTIONAL - for use without loader				**GROUP 05**
	72533850ML	Grille Guard		119.00
ACCESSORIES - OPTIONAL				**GROUP 06**
	72533709ML	Skid Steer Type Bucket Quick Attach Tool Carrier Kit. . . (Required for 72533680ML Bucket on MFL135E Loader)		559.00

MF2605H

(F.O.B. PORT OF ENTRY)

MASSEY FERGUSON®

TRACTOR FEATURES

ENGINE SYSTEM
- Simpson 2.6L, T4 Final, EPA & CARB Certified
- 3 Cylinder
- 157.08 cu. in. (2.6 l) Displacement
- 55 (40.4 kW) PS Gross Engine Horsepower @ 2000 RPM
- 46 (33.8 kW) PTO Horsepower @ 2000 RPM

FRONT AXLE - Two Factory Options
- 2 Wheel Drive with Telescopic Adjustment
  OR
- 4 Wheel Drive with Planetary Reduction Final Drives

POWER TRAIN
- **2wd Transmission** - 8x2 Sideshift - Sliding Gear - Transmission Shift Control Lever on Right Side and Range Box Shift Control Lever on Left Side
- Rear Axle Bevel Gear, Single Reduction Type
- **4wd Transmission** - 8x8 Synchro Shuttle with ComfiMesh™ - Transmission Shift Control Lever on Right Side and Range Box Shift Control Lever on Left Side
- Mechanical F-R Shuttle Lever Left Side of Steering Wheel
- Outboard Planetary Final Drives
- Brakes - Internal Multi Wet Disc with Mechanical Actuation
- Parking Brake - Mechanical Hand Lever

PTO
- **2wd** - Live, 540 RPM, 6 Spline shaft with Dual Stage Dry Clutch
- **4wd** - Independent PTO, 540 RPM, 6 Spline Shaft with Lever Operated Split Torque Clutch

THREE POINT LINKAGE
- Extendable Lower Links with Dual Turnbuckle Adjustment -Category I/II Cross Drilled Ball Ends
- Sway Chain Stabilizers

HYDRAULICS
- Hydrostatic Steering with Separate Reservoir
- Ferguson 3-Point Hitch System
- 3-Point Hitch Pump Flow (4.2 GPM) *
- Draft, Position and Response Control
- Single Spool Valve Included
- Hydraulic Pump Flow 11.2 GPM at Rear Remote *
- Maximum Hydraulic Flow 15.7 GPM (59.5 LPM) (Steering, 3-Point and Auxiliary Combined)

ELECTRICAL
- Headlights
- Single Rear Work Light
- Safety Lights
- 7 Pin ASAE Outlet

OPERATORS ENVIRONMENT
- Straddle Mount
- Grammer Seat that Inclines as it Moves Rearward
- Retractable Seatbelt
- Folding ROPS
- Suspended Foot Pedals
- Ground-Level Fuel Tank

OTHER STANDARD FEATURES
- Tilting One Piece Hood
- Swinging Drawbar
- Tool Box
- Drawbar Clevis

***Manufacturer's Estimate**

LOADER FEATURES

MFL135E Pin Type Style Loader
- One Piece Main Frame with Tapered Arms and Single Cross Member
- Quick Attach Loader Frame Mount with Pin Lock
- Built-in Parking Stands
- (2) 2.75 inch Double Acting Lift Cylinders
- (2) 2.75 inch Double Acting Bucket Cylinders
- Hydraulic Valves with Integrated Joystick Mount to Right Side Loader Subframe
- Hydraulic Lines Routed Inside Main Frame for Protection and Visibility
- Galvanized Steel Bushings with Recessed Grease Points
- Universal Skid Steer or Pin-Type Implement Attachments
- **Fits all MF2600H Series 2wd Tractors**
- Maximum Lift Height: 110.2 Inches at Pivot
- Lift Capacity to Full Height @ 19.6 inches Forward of Pivot Pin: 1770 lbs
- Breakout Force: 2870 lbs
- Rated Hydraulic Pressure: 2277 PSI

MF911X Loader
- One Piece Main Frame with Tapered Arms and Single Cross Member
- Quick Attach Loader Frame Mount with Pin Lock
- Built-in Parking Stands
- (2) 2.4 inch Double Acting Lift Cylinders
- (2) 2.4 inch Double Acting Bucket Cylinders
- Hydraulic Lines Routed Inside Main Frame for Protection and Visibility
- Galvanized Steel Bushings with Recessed Grease Points
- Universal Skid Steer or Euro Hook Type Implement Attachments
- **Fits all MF2600H Series 4wd Tractors**
- Maximum Lift Height: 115 inches at Pivot
- Lift Capacity to Full Height @ 31.5 inches Forward of Pivot Pin: 1510 lbs
- Breakout Force: 2750 lbs
- Rated Hydraulic Pressure: 2755 PS
- Grille Guard Standard

MASSEY FERGUSON®

MF2605H

(F.O.B. PORT OF ENTRY)

Order Code	Catalog Number	Description	List Price
		ORDER TRACTOR ONLY OR TRACTOR AND LOADER BELOW THEN ORDER ONE CODE FROM GROUP 03 THROUGH 06 AS REQUIRED	
MODEL - BASE MACHINE			**GROUP 01**
MF2605H		**MF2605H Base Tractor (55 Engine HP or 46 PTO HP)**	
XAJ	4330586	2wd, 8 x 2 Sideshift Transmission, Live PTO	$ 18,726.00
XAR	4330587	4wd, 8 x 8 Synchro Shuttle with ComfiMesh™ Transmission, Independent PTO	23,901.00
LOADER - 2WD Only			**GROUP 02**
2WD:			
	72533945	MF L135E Loader Package - Pin Type Style . . . . . Includes: Mounting Kit, Grille Guard, and Valve Kit with Hoses	4,139.00
4WD:			
	72533946	MF911X Loader Package - Skid Steer Style . . . . . Includes: Mounting Kit, Valve Kit and Grille Guard	6,367.00
	72533947	MF911X Loader Package - Euro Style . . . . . Includes: Mounting Kit, Valve Kit and Grille Guard	6,557.00

Note: For Additional Loader Options, Refer to Implements Price List Revision

All Tractors will be charged $325 for Assembly

WHEELS AND TIRES			**GROUP 03**
		2WD TIRES:	
51	4338601	Front: 6.00 X 16 Pressed Steel Welded. . . . . Rear: 13.6 X 28 R1 Pressed Steel Disc Adjustable Rim	1,610.00
99	4330518	Front: 7.5 x 16 Pressed Steel Welded . . . . . Rear: 13.6 x 28 R1 Pressed Steel Disc Adjustable Rim	1,815.00
		4WD TIRES:	
55	4339602	Front: 9.5 X 24 R1 Pressed Steel Disc Adjustable Rim . . Rear: 14.9 X 28 R1 Pressed Steel Disc Adjustable Rim	2,620.00

MASSEY FERGUSON®

Order Code	Catalog Number	Description	Approx. Weight (lb.)	List Price
BUCKET OPTIONS - Recommended with Loader Packages				**GROUP 04**
2wd - MFL135E Loader Package:				
	72533677ML	72-inch Pin Type Material Bucket	228	549.00
	72533922ML	72-inch High Volume HD Skid Steer Material Bucket Pre-Drilled to Accept a Bolt-on Cutting Edge (14 cu ft - designed for Compact Loaders) (Requires 72533709ML)	345	999.00
	72533680ML	72-inch Skid Steer Material Bucket (Requires 72533709ML)	228	569.00
4wd - MF911X Loader Packages:				
		Skid Steer Style		
	72533683ML	72-inch Skid Steer Material Bucket 180U, 17 cu ft	390	599.00
	72533684ML	84-inch Skid Steer Material Bucket 210U, 19 cu ft	437	759.00
		Euro Style		
	72533685ML	72-inch Euro Style Material Bucket 180U, 17 cu ft.	390	659.00
	72533686ML	84-inch Euro Style Material Bucket 210U, 19 cu ft.	437	839.00
GRILLE GUARD - OPTIONAL - for use without loader				**GROUP 05**
	72533850ML	Grille Guard		119.00
ACCESSORIES - OPTIONAL				**GROUP 06**
	72533709ML	Skid Steer Type Bucket Quick Attach Tool Carrier Kit (Required for 72533680ML Bucket on MFL135E Loader)		559.00

RESERVED

MF2606H

(F.O.B. PORT OF ENTRY)

MASSEY FERGUSON®

TRACTOR FEATURES

ENGINE SYSTEM
- Simpson 2.6L, T4 Final, EPA & CARB Certified
- 3 Cylinder
- 157.08 cu. in. (2.6 l) Displacement
- 65 (47.8 kW) PS Gross Engine Horsepower @ 2000 RPM
- 55 (40.4 kW) PTO Horsepower @ 2000 RPM with Independent PTO

FRONT AXLE - Two Factory Options
- 2 Wheel Drive with Telescopic Adjustment
  OR
- 4 Wheel Drive with Planetary Reduction Final Drives

POWER TRAIN
- Transmission - 8x8 Synchro Shuttle with ComfiMesh™ - Transmission Shift Control Lever on Right Side and Range Box Shift Control Lever on Left Side
- Mechanical F-R Shuttle Lever Left Side of Steering Wheel
- Outboard Planetary Final Drives
- Brakes - Internal Multi Wet Disc with Mechanical Actuation
- Parking Brake - Mechanical Hand Lever

PTO
- Independent PTO, 540 RPM, 6 Spline Shaft with Lever Operated Split Torque Clutch

THREE POINT LINKAGE
- Extendable Lower Links with Dual Turnbuckle Adjustment -Category I/II Cross Drilled Ball Ends
- Sway Chain Stabilizers

HYDRAULICS
- Hydrostatic Steering with Separate Reservoir
- Ferguson 3-Point Hitch System
- 3-Point Hitch Pump Flow (4.2 GPM) *
- Draft, Position and Response Control
- 2 Spool Valves Included
- Hydraulic Pump Flow 11.2 GPM at Rear Remote *
- Maximum Hydraulic Flow 15.7 GPM (59.5 LPM) (Steering, 3-Point and Auxiliary Combined)

ELECTRICAL
- Headlights
- Single Rear Work Light
- Safety Lights
- 7 Pin ASAE Outlet

OPERATORS ENVIRONMENT
- Straddle Mount
- Grammer Seat that Inclines as it Moves Rearward
- Retractable Seatbelt
- Folding ROPS
- Suspended Foot Pedals
- Ground-Level Fuel Tank

OTHER STANDARD FEATURES
- Tilting One Piece Hood
- Swinging Drawbar
- Tool Box
- Drawbar Clevis

***Manufacturer's Estimate**

LOADER FEATURES

MFL135E Pin Type Style Loader
- One Piece Main Frame with Tapered Arms and Single Cross Member
- Quick Attach Loader Frame Mount with Pin Lock
- Built-in Parking Stands
- (2) 2.75 inch Double Acting Lift Cylinders
- (2) 2.75 inch Double Acting Bucket Cylinders
- Hydraulic Valves with Integrated Joystick Mount to Right Side Loader Subframe
- Hydraulic Lines Routed Inside Main Frame for Protection and Visibility
- Galvanized Steel Bushings with Recessed Grease Points
- Universal Skid Steer or Pin-Type Implement Attachments
- **Fits all MF2600H Series 2wd Tractors**
- Maximum Lift Height: 110.2 Inches at Pivot
- Lift Capacity to Full Height @ 19.6 inches Forward of Pivot Pin: 1770 lbs
- Breakout Force: 2870 lbs
- Rated Hydraulic Pressure: 2277 PSI
- Grille Guard Standard

MF911X Loader
- One Piece Main Frame with Tapered Arms and Single Cross Member
- Quick Attach Loader Frame Mount with Pin Lock
- Built-in Parking Stands
- (2) 2.4 inch Double Acting Lift Cylinders
- (2) 2.4 inch Double Acting Bucket Cylinders
- Hydraulic Lines Routed Inside Main Frame for Protection and Visibility
- Galvanized Steel Bushings with Recessed Grease Points
- Universal Skid Steer or Euro Hook Type Implement Attachments
- **Fits all MF2600H Series 4wd Tractors**
- Maximum Lift Height: 115 inches at Pivot
- Lift Capacity to Full Height @ 31.5 inches Forward of Pivot Pin: 1510 lbs
- Breakout Force: 2750 lbs
- Rated Hydraulic Pressure: 2755 PS
- Grille Guard Standard

MASSEY FERGUSON®

MF2606H

(F.O.B. PORT OF ENTRY)

Order Code	Catalog Number	Description	List Price

ORDER TRACTOR ONLY OR
TRACTOR AND LOADER BELOW
THEN ORDER ONE CODE FROM GROUP 03 THROUGH 06 AS REQUIRED

MODEL - BASE MACHINE — GROUP 01

MF2606H		**MF2606H Base Tractor (65 Engine HP or 55 PTO HP)**	
YAM	4330588	2wd, 8 x 8 Synchro Shuttle with ComfiMesh™ Transmission, Independent PTO	22,494.00
YAR	4330589	4wd, 8 x 8 Synchro Shuttle with ComfiMesh™ Transmission, Independent PTO	26,242.00

LOADER PACKAGES — GROUP 02

2WD:

	72533945	MF L135E Loader Package - Pin Type Style . . . . . Includes: Mounting Kit, Grille Guard, and Valve Kit with Hoses	4,139.00

4WD:

	72533946	MF911X Loader Package - Skid Steer Style . . . . . Includes: Mounting Kit, Valve Kit and Grille Guard	6,367.00
	72533947	MF911X Loader Package - Euro Style . . . . . Includes: Mounting Kit, Valve Kit and Grille Guard	6,557.00

Note: For Additional Loader Options, Refer to Implements Price List Revision

All Tractors will be charged $325 for Assembly

WHEELS AND TIRES — GROUP 03

2WD TIRES:

53	4339601	Front: 7.5 X 16 Pressed Steel Welded . . . . . Rear: 14.9 X 28 R1 Pressed Steel Disc Adjustable Rim	1,868.00
99	4330524	Front: 11L15 F3 Pressed Steel Welded. . . . . Rear: 14.9 x 24 R4 Pressed Steel Disc Adjustable Rim	2,295.00

4WD TIRES:

55	4339602	Front: 9.5 X 24 R1 Pressed Steel Disc Adjustable Rim . . Rear: 14.9 X 28 R1 Pressed Steel Disc Adjustable Rim	2,620.00
99	4330526	Front: 10.5/80-18 R4 Pressed Steel Welded . . . . . Rear: 14.9 x 24 R4 Pressed Steel Disc Adjustable Rim	3,089.00
99	4330527	Front: 12.5/80-18 R4 Pressed Steel Welded . . . . . Rear: 16.9 x 24 R4 Pressed Steel Disc Adjustable Rim	3,205.00

MASSEY FERGUSON®

Order Code	Catalog Number	Description	Approx. Weight (lb.)	List Price
BUCKET OPTIONS - Recommended with Loader Packages				**GROUP 04**
2wd - MFL135E Loader Package:				
	72533677ML	72-inch Pin Type Material Bucket	228	549.00
	72533922ML	72-inch High Volume HD Skid Steer Material Bucket . . . Pre-Drilled to Accept a Bolt-on Cutting Edge (14 cu ft - designed for Compact Loaders) (Requires 72533709ML)	345	999.00
	72533680ML	72-inch Skid Steer Material Bucket . . . . . (Requires 72533709ML)	228	569.00
4wd - MF911X Loader Packages:				
		Skid Steer Style		
	72533683ML	72-inch Skid Steer Material Bucket 180U, 17 cu ft	390	599.00
	72533684ML	84-inch Skid Steer Material Bucket 210U, 19 cu ft	437	759.00
		Euro Style		
	72533685ML	72-inch Euro Style Material Bucket 180U, 17 cu ft.	390	659.00
	72533686ML	84-inch Euro Style Material Bucket 210U, 19 cu ft.	437	839.00
GRILLE GUARD - OPTIONAL - for use without loader				**GROUP 05**
	72533850ML	Grille Guard		119.00
ACCESSORIES - OPTIONAL				**GROUP 06**
	72533709ML	Skid Steer Type Bucket Quick Attach Tool Carrier Kit. . . (Required for 72533680ML Bucket on MFL135E Loader)		559.00

RESERVED

MF2607H

(F.O.B. PORT OF ENTRY)

MASSEY FERGUSON®

TRACTOR FEATURES

ENGINE SYSTEM
- Simpson 2.6L, T4 Final, EPA & CARB Certified
- 3 Cylinder
- 157.08 cu. in. (2.6 l) Displacement
- 74 (54.4 kW) PS Gross Engine Horsepower @ 2000 RPM
- 64 (47 kW) PTO Horsepower @ 2000 RPM with Independent PTO

FRONT AXLE - Two Factory Options
- 2 Wheel Drive with Telescopic Adjustment
  OR
- 4 Wheel Drive with Planetary Reduction Final Drives

POWER TRAIN
- Transmission - 8x8 Synchro Shuttle with ComfiMesh™ - Transmission Shift Control Lever on Right Side and Range Box Shift Control Lever on Left Side
- Mechanical F-R Shuttle Lever Left Side of Steering Wheel
- Outboard Planetary Final Drives
- Brakes - Internal Multi Wet Disc with Mechanical Actuation
- Parking Brake - Mechanical Hand Lever

PTO
- Independent PTO, 540 RPM, 6 Spline Shaft with Lever Operated Split Torque Clutch

THREE POINT LINKAGE
- Extendable Lower Links with Right Side Turnbuckle Adjustment - Category I/II Cross Drilled Ball Ends
- Sway Chain Stabilizers

HYDRAULICS
- Hydrostatic Steering with Separate Reservoir
- Ferguson 3-Point Hitch System
- 3-Point Hitch Pump Flow (4.2 GPM) *
- Draft, Position and Response Control
- 2 Spool Valves Included
- Hydraulic Pump Flow 11.2 GPM at Rear Remote *
- Maximum Hydraulic Flow 15.7 GPM (59.5 LPM) (Steering, 3-Point and Auxiliary Combined)

ELECTRICAL
- Headlights
- Single Rear Work Light
- Safety Lights
- 7 Pin ASAE Outlet

OPERATORS ENVIRONMENT
- Straddle Mount
- Grammer Seat that Inclines as it Moves Rearward
- Retractable Seatbelt
- Folding ROPS
- Suspended Foot Pedals
- Ground-Level Fuel Tank

OTHER STANDARD FEATURES
- Tilting One Piece Hood
- Swinging Drawbar
- Tool Box
- Drawbar Clevis

***Manufacturer's Estimate**

LOADER FEATURES

MFL135E Pin Type Style Loader
- One Piece Main Frame with Tapered Arms and Single Cross Member
- Quick Attach Loader Frame Mount with Pin Lock
- Built-in Parking Stands
- (2) 2.75 inch Double Acting Lift Cylinders
- (2) 2.75 inch Double Acting Bucket Cylinders
- Hydraulic Valves with Integrated Joystick Mount to Right Side Loader Subframe
- Hydraulic Lines Routed Inside Main Frame for Protection and Visibility
- Galvanized Steel Bushings with Recessed Grease Points
- Universal Skid Steer or Pin-Type Implement Attachments
- **Fits all MF2600H Series 2wd Tractors**
- Maximum Lift Height: 110.2 Inches at Pivot
- Lift Capacity to Full Height @ 19.6 inches Forward of Pivot Pin: 1770 lbs
- Breakout Force: 2870 lbs
- Rated Hydraulic Pressure: 2277 PSI
- Grille Guard Standard

MF911X Loader
- One Piece Main Frame with Tapered Arms and Single Cross Member
- Quick Attach Loader Frame Mount with Pin Lock
- Built-in Parking Stands
- (2) 2.4 inch Double Acting Lift Cylinders
- (2) 2.4 inch Double Acting Bucket Cylinders
- Hydraulic Lines Routed Inside Main Frame for Protection and Visibility
- Galvanized Steel Bushings with Recessed Grease Points
- Universal Skid Steer or Euro Hook Type Implement Attachments
- **Fits all MF2600H Series 4wd Tractors**
- Maximum Lift Height: 115 inches at Pivot
- Lift Capacity to Full Height @ 31.5 inches Forward of Pivot Pin: 1510 lbs
- Breakout Force: 2750 lbs
- Rated Hydraulic Pressure: 2755 PS
- Grille Guard Standard

MASSEY FERGUSON®

MF2607H

(F.O.B. PORT OF ENTRY)

Order Code	Catalog Number	Description	List Price

ORDER TRACTOR ONLY OR
TRACTOR AND LOADER BELOW
THEN ORDER ONE CODE FROM GROUP 03 THROUGH 06 AS REQUIRED

MODEL - BASE MACHINE — GROUP 01

MF2607H		**MF2607H Base Tractor (74 Engine HP or 64 PTO HP)**	
ZAM	4330590	2wd, 8 x 8 Synchro Shuttle with ComfiMesh™ Transmission, Independent PTO	$ 23,964.00
ZAR	4330591	4wd, 8 x 8 Synchro Shuttle with ComfiMesh™ Transmission, Independent PTO	27,714.00

LOADER PACKAGES — GROUP 02

2WD:

	72533945	MF L135E Loader Package - Pin Type Style . . . . . Includes: Mounting Kit, Grille Guard, and Valve Kit with Hoses	4,139.00

4WD:

	72533946	MF911X Loader Package - Skid Steer Style . . . . . Includes: Mounting Kit, Valve Kit and Grille Guard	6,367.00
	72533947	MF911X Loader Package - Euro Style . . . . . Includes: Mounting Kit, Valve Kit and Grille Guard	6,557.00

Note: For Additional Loader Options, Refer to Implements Price List Revision

All Tractors will be charged $325 for Assembly

WHEELS AND TIRES — GROUP 03

2WD TIRES:

56	4340601	Front: 7.5 X 16 Pressed Steel Welded . . . . . Rear: 16.9 X 28 R1 Pressed Steel Disc Adjustable Rim	1,973.00
99	4330524	Front: 11L15 F3 Pressed Steel Welded. . . . . Rear: 14.9 x 24 R4 Pressed Steel Disc Adjustable Rim	2,295.00

4WD TIRES:

57	4340602	Front: 9.5 X 24 R1 Pressed Steel Disc Adjustable Rim . . Rear: 16.9 X 28 R1 Pressed Steel Disc Adjustable Rim	2,723.00
99	4330527	Front: 12.5/80-18 R4 Pressed Steel Welded . . . . . Rear: 16.9 x 24 R4 Pressed Steel Disc Adjustable Rim	3,205.00
99	4330528	Front: 10.5/80-18 R4 Pressed Steel Welded . . . . . Rear: 16.9 x 24 R4 Pressed Steel Disc Adjustable Rim	3,205.00

MASSEY FERGUSON®

Order Code	Catalog Number	Description	Approx. Weight (lb.)	List Price
BUCKET OPTIONS - Recommended with Loader Packages				**GROUP 04**
2wd - MFL135E Loader Package:				
	72533677ML	72-inch Pin Type Material Bucket	228	549.00
	72533922ML	72-inch High Volume HD Skid Steer Material Bucket Pre-Drilled to Accept a Bolt-on Cutting Edge (14 cu ft - designed for Compact Loaders) (Requires 72533709ML)	345	999.00
	72533680ML	72-inch Skid Steer Material Bucket (Requires 72533709ML)	228	569.00
4wd - MF911X Loader Packages:				
		Skid Steer Style		
	72533683ML	72-inch Skid Steer Material Bucket 180U, 17 cu ft	390	599.00
	72533684ML	84-inch Skid Steer Material Bucket 210U, 19 cu ft	437	759.00
		Euro Style		
	72533685ML	72-inch Euro Style Material Bucket 180U, 17 cu ft.	390	659.00
	72533686ML	84-inch Euro Style Material Bucket 210U, 19 cu ft.	437	839.00
GRILLE GUARD - OPTIONAL - for use without loader				**GROUP 05**
	72533850ML	Grille Guard		119.00
ACCESSORIES - OPTIONAL				**GROUP 06**
	72533709ML	Skid Steer Type Bucket Quick Attach Tool Carrier Kit (Required for 72533680ML Bucket on MFL135E Loader)		559.00

RESERVED

FIELD INSTALLED ACCESSORIES

PARTS SUPPLIED

DEALER / FIELD INSTALLED ACCESSORIES

Consult your AGCO parts ordering system using oneAGCO Solutions-Online to determine current availability and pricing.

CATALOG NUMBER	DESCRIPTION	2604H	2605H	2606H	2607H	NOTES
ENGINE						
773323M92	Engine Block Heater	X	X	X	X	
LINKAGE / DRAWBAR						
180485M1	Category 1 Cross Drawbar	X	X	X	X	
3306432M2	Category 2 Cross Drawbar	X	X	X	X	
HYDRAULICS						
2400897S91	2nd Spool Valve (SRTN)	X	X			Order Both Catalog Numbers to Make a Complete Kit Requires 4326082M11 Spool Valve Installed first
OPERATOR'S AREA						
2401255S91	Seat Arm Rest Kit	X	X	X	X	
22076A91	7 Pin Electrical Plug	X	X	X	X	
T0288011	Canopy	X	X	X	X	Requires 4326001M11 Adapter Kit
4326001M11	Canopy Adapter Kit	X	X	X	X	

MASSEY FERGUSON®

FIELD INSTALLED ACCESSORIES

PARTS SUPPLIED

DEALER / FIELD INSTALLED ACCESSORIES

Consult your AGCO parts ordering system using oneAGCO Solutions-Online to determine current availability and pricing.

CATALOG NUMBER	DESCRIPTION	2604H	2605H	2606H	2607H	NOTES
WEIGHTS / BALLAST						
2400888S91	Front Weight Bracket	X	X	X	X	
3609170M92	Front Suitcase Weight (90 lbs)	X	X	X	X	Maximum of 5 Weights on 2605 and 2615 Tractors
4326058M1	**Rear Wheel Weight (100 lbs)** Mounting Hardware Required per Wheel Weight: 4326121M1 Spacer (qty 3) 70925704 Cap Screw (qty 3) 70932665 Nut (qt 3) 70918268 Flat Washer (qty 3)	X	X			8x2 Transmission Only. Single Weight. Does Not Include Hardware. Do Not Exceed the Maximum Allowable Tractor Weight.
4326060M1	**Rear Wheel Weight (100 lbs)** Mounting Hardware Required per Wheel Weight: 70934794 Carriage Bolt (qty 4) 70932665 Nut (qty 4) 70918268 Flat Washer (qty 4)			X	X	Single Weight. Does Not Include Hardware. Do Not Exceed the Maximum Allowable Tractor Weight.
ACW0128050	Rear Wheel Weight Adaptor requires 4326722M91 hardware kit			X	X	
4326722M91	Rear Wheel Weight Hardware Kit (Long Studs)			X	X	
ACW0128080	Rear Wheel Weight requires ACW0089550 Hardware Kit			X	X	
ACW0089550	Rear Wheel Weight Hardware Kit			X	X	

MASSEY FERGUSON®

MF 2700E Series
Utility Tractors

MF 2705E

MASSEY FERGUSON®

(F.O.B. Port of Entry)

FEATURES

POWER TRAIN

- Engine:
  48.8 Rated Engine HP Shibaura 4-Cylinder liquid cooled Diesel, 2.2L (135 cu in) Direct Injection, Turbocharged, Electronic Engine Control
  41.4 PTO HP @ 2600 RPM - 8x8
  39.0 PTO HP @ 2600 RPM - Hydrostatic
  Emission Standard Category: Tier 4 Final CARB and EPA Certified
- Dual Element Dry Type Air Cleaner
- Transmission:
  - 8F/8R Synchro Shuttle with 2 Synchronized Gears (3rd and 4th) and 2 Ranges
  - Servo-Assist Electronic Hydrostatic Transmission with 3 Ranges and Cruise Control
- 4WD Front Axle with Center Drive Line and Bevel-gear Final Drives
- Sealed Wet Disc Brakes
- Pedal Operated Differential Lock
- PTO:
  Rear - 540 RPM Independent Electro Hydraulic

HYDRAULIC SYSTEM

- 3-Point Hitch Cat. I and II with Position Control Standard, Draft Control Optional
- Lift Capacity @ 24 inches - 2,425 lb (1100 kg)
- Telescopic Stabilizers
- Telescopic Draft Link Ends
- Flow at Remotes 12.4 GPM (47.8 LPM)
- Hydrostatic Power Steering

ELECTRICAL

- 12-Volt DC System
- 90 Amp Alternator

INSTRUMENTS

- Combination Digital and Analog Front Dash Display
- Tachometer and Hour Meter
- Temperature and Fuel Gauges
- Warning Lights: High Beam Indicator, Engine Oil Pressure, PTO Engagement, Battery Charge (alt) Indicator, Glow Plug Indicator and Flasher Indicators
- Key Operated Electronic Fuel Shutoff and Glow Plug Control

OTHER STANDARD FEATURES

- ISO Mounted Flat Platform
- One Piece Tilt-up Hood
- 2 Post Folding ROPS and Retractable Seat Belt
- Turn Signals, Flashers, Tail Lights and SMV Emblem
- 2 Headlights
- Tool Box

NOTES:

- ***Specifications are Manufacturers estimates at time of publication and are subject to change without prior notification.***
- ***3-Point Backhoe Installation Voids Warranty***

IMPLEMENT FEATURES

MF L135E PIN TYPE STYLE LOADER

- One Piece Main Frame with Tapered Arms and Single Cross Member
- Quick Attach Loader Frame Mount with Pin Lock
- Built-in Parking Stands
- (2) 2.75 inch Double Acting Lift Cylinders
- (2) 2.75 inch Double Acting Bucket Cylinders
- Hydraulic Valves with Integrated Joystick Mount to Right Side Loader Subframe
- Hydraulic Lines Routed Inside Main Frame for Protection and Visibility
- Galvanized Steel Bushings with Recessed Grease Points
- Universal Skid Steer or Pin-Type Implement Attachments
- Grille Guard Standard
- Fits MF2705E and MF2706E Series Tractor Models with R1 AG R3 or R4 Industrial Tires
- Maximum Lift Height: 110.2 Inches at Pivot
- Lift Capacity to Full Height @ 19.6 inches Forward of Pivot Pin: 1770 lbs
- Breakout Force: 2870 lbs
- Rated Hydraulic Pressure: 2277 PSI

MASSEY FERGUSON®

Order Code	Catalog Number	Description	Approx. Weight	List Price

ORDER TRACTOR THEN ORDER ONE CODE FROM GROUP 02 THROUGH 05 AS REQUIRED

BASE MACHINE — GROUP 01

MF2705E		**MF2705E Synchro Shuttle Tractor**	
F-S-RE3	72530429	4wd Platform Synchro Shuttle 8x8	22,669.00
F-S-V-RE3	72530433	4wd Platform Synchro Shuttle 8x8 with 1 Rear Hydraulic Remote	23,479.00
MF2705EH		**MF2705E Hydrostatic Base Tractor**	
F-H-RE3	72530428	4wd Platform HST	24,419.00
F-H-V-RE3	72530432	4wd Platform HST with 1 Rear Hydraulic Remote	25,229.00

LOADER — GROUP 02

	72533951	MF L135E Pin Type Style Loader Package Includes: Mounting Kit, Grille Guard, and Valve Kit with Hoses	4,139.00

Note: For Additional Loader Options, Refer to Implements Price List Revision

*** ALL Tractors will be charged $325 for Assembly**

TIRES & WHEELS - Required — GROUP 03

NOTE: See Dealer / Field Installed Accessories for list of Tires & Wheels available as Loose Accessory orders. Tire and wheel options ordered with the tractor and not subject to availability can be returned via RGA. Contact Dealer Central with questions.

		AG Tires Options	
	7498756M	Rear: 13.6x28 6PR R1 Adjustable Front: 9.5x16 6PR R1	2,339.00
	7498767M	Rear: 16.9x24 6PR R1 Adjustable Front: 9.5x16 6PR R1	2,379.00
		Turf Tires Options	
	7498778M	Rear: 44x18.00-20 4PR Front: 27x10.50-15 4PR	2,429.00
		Industrial Tires Options	
	7498710M	Rear: 17.5L-24 6PR R4 Adjustable. Front: 10-16.5 6PR	2,439.00

Order Code	Catalog Number	Description	Approx. Weight	List Price
BUCKET OPTIONS - Recommended with Loader Packages				**GROUP 04**
	72533677ML	72-inch Pin Type Material Bucket	228	549.00
	72533922ML	72-inch High Volume Skid Steer Material Bucket Pre-Drilled to Accept a Bolt-on Cutting Edge (Requires 72533709M)	345	999.00
	72533680ML	72-inch Skid Steer Material Bucket (Requires 72533709M)	228	569.00
ACCESSORIES - OPTIONAL				**GROUP 05**
	72533709ML	Skid Steer Type Bucket Quick Attach Tool Carrier Kit		559.00

MF 2706E

(F.O.B. Port of Entry)

MASSEY FERGUSON®

FEATURES

POWER TRAIN

- Engine:
  57.3 Rated Engine HP Shibaura 4-Cylinder liquid cooled Diesel, 2.2L (135 cu in) Direct Injection, Turbocharged and Intercooled, Electronic Engine Control
  48.7 PTO HP @ 2600 RPM - 8x8
  45.9 PTO HP @ 2600 RPM - Hydrostatic
  Emission Standard Category: Tier 4 Final CARB and EPA Certified
- Dual Element Dry Type Air Cleaner
- Transmission:
  - 8F/8R Synchro Shuttle with 2 Synchronized Gears (3rd and 4th) and 2 Ranges
  - Servo-Assist Electronic Hydrostatic Transmission with 3 Ranges and Cruise Control
- 4WD Front Axle with Center Drive Line and Bevel-gear Final Drives
- Sealed Wet Disc Brakes
- Pedal Operated Differential Lock
- PTO:
  Rear - 540 RPM Independent Electro Hydraulic

HYDRAULIC SYSTEM

- 3-point Hitch Cat. I and II with Position Control Standard, Draft Control Optional
- Lift Capacity @ 24 inches - 2,425 lb (1100 kg)
- Telescopic Stabilizers
- Telescopic Draft Link Ends
- Flow at Remotes 12.4 GPM (47.8 LPM)
- Hydrostatic Power Steering

ELECTRICAL

- 12-Volt DC System
- 90 Amp Alternator

INSTRUMENTS

- Combination Digital and Analog Front Dash Display
- Tachometer and Hour Meter
- Temperature and Fuel Gauges
- Warning Lights: High Beam Indicator, Engine Oil Pressure, PTO Engagement, Battery Charge (alt) Indicator, Glow Plug Indicator and Flasher Indicators
- Key Operated Electronic Fuel Shutoff and Glow Plug Control

OTHER STANDARD FEATURES

- ISO Mounted Flat Platform
- One Piece Tilt-up Hood
- 2 Post Folding ROPS and Retractable Seat Belt
- Turn Signals, Flashers, Tail Lights and SMV Emblem
- 2 Headlights
- Tool Box

NOTES:

- ***Specifications are Manufacturers estimates at time of publication and are subject to change without prior notification.***
- ***3-Point Backhoe Installation Voids Warranty***

IMPLEMENT FEATURES

MF L135E PIN TYPE STYLE LOADER

- One Piece Main Frame with Tapered Arms and Single Cross Member
- Quick Attach Loader Frame Mount with Pin Lock
- Built-in Parking Stands
- (2) 2.75 inch Double Acting Lift Cylinders
- (2) 2.75 inch Double Acting Bucket Cylinders
- Hydraulic Valves with Integrated Joystick Mount to Right Side Loader Subframe
- Hydraulic Lines Routed Inside Main Frame for Protection and Visibility
- Galvanized Steel Bushings with Recessed Grease Points
- Universal Skid Steer or Pin-Type Implement Attachments
- Grille Guard Standard
- Fits MF2705E and MF2706E Series Tractor Models with R1 AG R3 or R4 Industrial Tires
- Maximum Lift Height: 110.2 Inches at Pivot
- Lift Capacity to Full Height @ 19.6 inches Forward of Pivot Pin: 1770 lbs
- Breakout Force: 2870 lbs
- Rated Hydraulic Pressure: 2277 PSI

Order Code	Catalog Number	Description	Approx. Weight	List Price

ORDER TRACTOR THEN ORDER ONE CODE FROM GROUP 02 THROUGH 05 AS REQUIRED

BASE MACHINE — GROUP 01

MF2706E		**MF2706E Synchro Shuttle Tractor**	
F-S-RE3	72530431	4wd Platform Synchro Shuttle 8x8	24,779.00
F-S-V-RE3	72530435	4wd Platform Synchro Shuttle 8x8 with 1 Rear Hydraulic Remote	25,589.00
MF2706EH		**MF2706E Hydrostatic Base Tractor**	
F-H-RE3	72530430	4wd Platform HST	26,149.00
F-H-V-RE3	72530434	4wd Platform HST with 1 Rear Hydraulic Remote	26,959.00

LOADER — GROUP 02

	72533951	MF L135E Pin Type Style Loader Package Includes: Mounting Kit, Grille Guard, and Valve Kit with Hoses	4,139.00

Note: For Additional Loader Options, Refer to Implements Price List Revision

*** ALL Tractors will be charged $325 for Assembly**

TIRES & WHEELS - Required — GROUP 03

NOTE: See Dealer / Field Installed Accessories for list of Tires & Wheels available as Loose Accessory orders. Tire and wheel options ordered with the tractor and not subject to availability can be returned via RGA. Contact Dealer Central with questions.

		AG Tires Options	
	7498756M	Rear: 13.6x28 6PR R1 Adjustable Front: 9.5x16 6PR R1	2,339.00
	7498767M	Rear: 16.9x24 6PR R1 Adjustable Front: 9.5x16 6PR R1	2,379.00
		Turf Tires Options	
	7498778M	Rear: 44x18.00-20 4PR Front: 27x10.50-15 4PR	2,429.00
		Industrial Tires Options	
	7498710M	Rear: 17.5L-24 6PR R4 Adjustable. Front: 10-16.5 6PR	2,439.00

MASSEY FERGUSON®

Order Code	Catalog Number	Description	Approx. Weight	List Price
BUCKET OPTIONS - Recommended with Loader Packages				**GROUP 04**
	72533677ML	72-inch Pin Type Material Bucket	228	549.00
	72533922ML	72-inch High Volume Skid Steer Material Bucket Pre-Drilled to Accept a Bolt-on Cutting Edge (Requires 72533709M)	345	999.00
	72533680ML	72-inch Skid Steer Material Bucket (Requires 72533709M)	228	569.00
ACCESSORIES - OPTIONAL				**GROUP 05**
	72533709ML	Skid Steer Type Bucket Quick Attach Tool Carrier Kit		559.00

UTILITY TRACTOR

MASSEY FERGUSON®

WHOLEGOODS

DEALER / FIELD INSTALLED ACCESSORIES

Please Order these Items through Dealer Central on a Separate Order from the Tractor Order.

CATALOG NUMBER	DESCRIPTION	2705E 2706E	LIST PRICE
72533931M	Direct Control Hydraulc Valve with Float, for Operation of the Lift/Lower and Curl/Dump Functions (Includes Hoses to Base Loader)	X	867.00
72533710M	Grille Guard without Loader	X	159.00
72533711M	Front Weight Bracket Kit (Requires Grille Guard)	X	129.00

For the most recent product information, always reference the Sale Engineering Documents on www.OneAGCO.com

PARTS SUPPLIED

DEALER / FIELD INSTALLED ACCESSORIES

Consult your AGCO parts ordering system using oneAGCO Solutions-Online to determine current availability and pricing

CATALOG NUMBER	DESCRIPTION	2705E 2706E	FACTORY CODE
72530329	Category 1 Quick Hitch Note: Implement May Require Adapter Bushings (Not all 3- Point Implements are Compatible with Quick Hitch)	X	Contact AGCO Parts Division
6241637M91	Power Beyond Plug	X	Contact AGCO Parts Division
6241534M2	Front Bumper / Weight Bracket (without Grille Guard)	X	Contact AGCO Parts Division
4330412M91	Block Heater	X	Contact AGCO Parts Division
79018831	Rear Wheel Weights 106 lbs each, for R1 and R4 Tires on all Models (excludes 15x19.5 tire option) Weights are Stackable	X	Contact AGCO Parts Division
79023243	Rear Wheel Weights 80 lbs each, for 41x14.00-20 and 44x18.00-20 Rear R3 Turf Tires. Weights are Stackable	X	Contact AGCO Parts Division
4269010A91	Plastic Sunshade (Gray)	X	Contact AGCO Parts Division
7071419M91	Rear Remote Valve (one Valve Body)	X	Contact AGCO Parts Division
7071420M92	1st Position Rear Hydraulic Remote Valve Kit (Requires one 7071419M91)	X	Contact AGCO Parts Division
7071421M92	2nd Position Rear Hydraulic Remote Valve Kit (Requires one 7071419M91)	X	Contact AGCO Parts Division
7071422M91	3rd Position Rear Hydraulic Remote Valve Kit (Requires one 7071419M91)	X	Contact AGCO Parts Division
7071496M91	Light Guard	X	Contact AGCO Parts Division
7071401M91	Draft Control Kit	X	Contact AGCO Parts Division
4283576M2	French Operators Manual	X	Contact AGCO Parts Division
TBD	Spanish Operators Manual	X	Contact AGCO Parts Division

For the most recent product information, always reference the Sale Engineering Documents on www.OneAGCO.com

MASSEY FERGUSON®

RESERVED

MASSEY FERGUSON®

4600M Series

UTILITY

MF4607M

MASSEY FERGUSON®

(F.O.B. PORT OF ENTRY)

TRACTOR FEATURES

ENGINE SYSTEM
- Engine: AGCO Power 33AWIC 3 Cylinder (Turbocharged)
  70 Engine HP (52.2 kW) @ 2200 RPM
  56 PTO HP Est. (41.8 kW) @ 2000 RPM
- EPA Tier 4 Final Compliant, CARB Certified
- Air Cleaner: Dual Element Dry Type
- Air Cleaner Intake, Under Hood
- Vertical Exhaust, Side of Hood
- Cooling System: Antifreeze 50/50 Mix
- Cold Starting Aid: Intake Heater

FRONT AXLE
- 2wd: Adjustable
- 4wd: Center Driveline, Open Differential, Mechanical Engagement

POWER TRAIN
- Transmission:
  12 X 12 Power Shuttle with Left Hand Shuttle Lever
  6 Synchronized Gears, 2 Ranges
  Wet Multi-disc Clutch with Left Side Clutch Pedal
- Rear Axle: Inboard Planetary Final Drives, with Foot Operated Mechanical Differential Lock
- Brakes: Independent Oil Immersed Wet Disc Brakes with Independent Foot Pedal Operation
- Hook and Lever Parking Brake
- PTO: Independent 540 and 1000 RPM Speeds, 6 Spline Shaft and 21 Spline (1.375 In. Diameter), Independent Wet Disc Clutch, Electro-hydraulic Engagement

HYDRAULIC SYSTEM
- Steering: Hydrostatic, Adjustable Tilt Steering Column
- Implement System:
  Open Center System, Engine Driven Gear Pump
  17.5 GPM (66 LPM) flow to Remotes
  Optional Integrated Cable-controlled Loader Joystick with Mid Valves
- Rear Linkage:
  ASAE Category II with Telescopic Ball Ends
  Shared Pump with Implements
  Lift Capacity at 24": 3307 LBS (1500 KG)
  Adjustable Lift Rod, Turn Buckle Top Link
  Telescopic Stabilizers
- Swinging Drawbar

ELECTRICAL
- 12 Volt DC, Negative Ground
- Intake Air Pre Heater
- Wet, Maintenance Free 799 CCA Battery
  95 AMP Alternator
- Ignition: Key with Safety Start
- Keyed Engine Shutoff
- Lighting: 4 Headlights, 2 Rear Marker Light Assemblies
- 7 Pin ASAE Outlet Socket

INSTRUMENTS
- Digital and Analog Dash Display
- Digital Engine Tachometer
- Digital Fuel Gauge
- Digital Engine Temperature
- Digital Transmission Display
- Digital Hour Meter
- Operation and Service Lights

OPERATORS ENVIRONMENT (Platform Models)
- Flat Floor Platform
- Folding ROPS
- Seat: Adjustable Spring Cushion Vinyl with Armrests
- Retractable Seat Belt
- Pendant Style (Suspended) Foot Pedals
- Hand and Foot Throttle
- Left Side Foot Step

OPERATORS ENVIRONMENT (Cab Models)
- 6-post Cab With HVAC, Tinted Safety Glass, Front Windshield Wiper/Washer, Front and Rear Roof-mounted Working Lights, 2 Doors, Pre-wired for Audio System
- Right and Left Side View Mirrors
- Seat: Adjustable Spring Cushion with Armrests
- Retractable Seat Belt
- Pendant Style (Suspended) Foot Pedals
- Hand and Foot Throttle
- Left and Right Side Foot Step

OTHER STANDARD FEATURES
- Fuel Tank Under Platform, Ground Fill
  Fuel Capacity: 30.4 gallons (115 Liters)
- One-Piece Tilting Hood
- Tool Box
- SMV Emblem

LOADER FEATURES

MF921X Loader
- One Piece Main Frame with Tapered Arms and Single Cross Member
- Quick Attach Loader Frame Mount with Pin Lock
- Built-in Parking Stands
- (2) 2.6 inch Double Acting Lift Cylinders
- (2) 2.6 inch Double Acting Bucket Cylinders
- Hydraulic Lines Routed Inside Main Frame for Protection and Visibility
- Galvanized Steel Bushings with Recessed Grease Points
- Universal Skid Steer or Euro Hook Type Implement Attachments
- Grille Guard Standard
- Fits MF4607M 4wd Tractor Models
- Rated on MF4608 Tractor with 9.5-24 Front Tires and 16.9-30 Rear Tires
- Lift Capacity to Full Height @ 31.5 inches Forward of Pivot Pin: 1920 lbs
- Maximum Lift Height: 124 inches at Pivot
- Breakout Force: 3200 lbs
- Rated Hydraulic Pressure: 2828 PSI

- ***NOTE**: MF926X Mechanical Self-Leveling Loader available as Dealer Installed only. Order separately from Tractor.*

MF4607M

(F.O.B. PORT OF ENTRY)

MASSEY FERGUSON®

Order Code	Catalog Number	Description	List Price
ORDER TRACTOR THEN ORDER ONE CODE FROM GROUP 02 THROUGH 09 AS REQUIRED			
BASE MACHINE			**GROUP 01**
MF4607M	72530438	MF4607M Base Tractor	35,059.00
MF4607M-J	72530441	MF4607M Tractor with Loader Provisions **(4wd Only)** . . . Includes Loader Frame Rails, Factory Joystick, and Loader Valve **(Does not include Loader Uprights. See Loader Package below, or Implement Price pages for other Loader Options)**	37,009.00
LOADER - For use with Tractor with Loader Provision Only			**GROUP 02**
	Non Self-Leveling		
	72533825	MF921X Loader Package - Skid Steer Style . . . . . Includes: Loader Uprights, Hose Kit and Grille Guard	5,399.00
OPERATOR ENVIRONMENT			**GROUP 03**
RE3	72530444	Platform	In Base
CE3	72530445	Standard Cab	9,279.00
CDE3	72530446	Deluxe Cab . . . . . (Requires 4wd, Factory Joystick with Loader Valve, Loader Frame Rails, and Float/Kickout Valves) Includes: 3-Point Hitch Fender Controls on Left Hand Side Fender, Air Ride Seat, 2 LED Lights Front and 2 LED Lights Rear, Rear Window Defrost, Rear Window Wiper, Front Pull Down Sun Visor, Antenna, and Speakers	12,779.00
FRONT AXLE			**GROUP 04**
F	72530448	4wd Front Axle	In Base
T	72530447	2wd Front Axle	(4,115.00)
TRANSMISSION			**GROUP 05**
	72530449	12 X 12 Hydraulic Shuttle	In Base
L	72530451	12 X 12 Hydraulic Shuttle with Creeper Gear . . . . . **Requires** 4wd and 1 Float + Kickout Valve and 1 Float Hydraulic Valve **Available** on Non-Loader Ready Models for any Operator Station (Compatible with Dealer Installed Loaders)	1,239.00

NOTE: *MF926X Mechanical Self-Leveling Loader available as Dealer Installed only. Order separately from Tractor. For Additional Loader Options, Refer to Implement Price List Revision.*

ALL Tractors will be charged $325 for Assembly

MF4607M

MASSEY FERGUSON®

(F.O.B. PORT OF ENTRY)

Order Code	Catalog Number	Description	List Price
HYDRAULICS			**GROUP 06**
		4WD Hydraulic Options	
W	72530453	2 Spool Valves - Spring Return to Neutral	In Base for 4wd
K	72530455	1 Float + Kickout Valve and 1 Float Valve	339.00
		2WD Hydraulic Options0	
V	72530454	1 Spool Valve - Spring Return to Neutral	In Base for 2wd
REAR AND FRONT TIRES			**GROUP 07**
		4WD Tires	
	72530414M	R: 16.9-30 R1 . . . . . F: 11.2-24	4,161.00
	72530417M	R: 19.5L-24 R4 . . . . . F: 12.5/80-18	4,635.00
		2WD Tires	
	72530420M	R: 16.9-30 R1 . . . . . F: 9.5L-15	3,119.00
	72530421M	R: 16.9-30 R1 . . . . . F: 7.50-18	3,127.00
BUCKET OPTIONS - Recommended with Loader Packages Only			**GROUP 08**
		Skid Steer Style	
	72533683ML	72-inch Skid Steer Material Bucket 180U, 17 cu ft	599.00
	72533684ML	84-inch Skid Steer Material Bucket 210U, 19 cu ft	759.00
MISCELLANEOUS OPTIONS			**GROUP 09**
	72533731ML	Grille Guard for Tractor without Loader	119.00

MF4609M

(F.O.B. PORT OF ENTRY)

MASSEY FERGUSON®

TRACTOR FEATURES

ENGINE SYSTEM
- Engine: AGCO Power 33AWIC 3 Cylinder (Turbocharged)
  90 Engine HP (67 kW) @ 2200 RPM
  72 PTO HP (53.7 kW) @ 2000 RPM
- EPA Tier 4 Final Compliant with SCR, CARB Certified
- Air Cleaner: Dual Element Dry Type
- Air Cleaner Intake, Under Hood
- Vertical Exhaust, A Pillar
- Cooling System: Antifreeze 50/50 Mix
- Cold Starting Aid: Intake Heater

FRONT AXLE
- 2wd: Adjustable
- 4wd: Center Driveline, Open Differential, Mechanical Engagement

POWER TRAIN
- Transmission:
  12 X 12 Power Shuttle with Left Hand Shuttle Lever
  6 Synchronized Gears, 2 Ranges
  Wet Multi-disc Clutch with Left Side Clutch Pedal
- Rear Axle: Inboard Planetary Final Drives, with Foot Operated Mechanical Differential Lock
- Brakes: Independent Oil Immersed Wet Disc Brakes with Independent Foot Pedal Operation
- Hook and Lever Parking Brake
- PTO: Independent 540 and 1000 RPM Speeds, 6 Spline Shaft and 21 Spline (1.375 In. Diameter), Independent Wet Disc Clutch, Electro-hydraulic Engagement

HYDRAULIC SYSTEM
- Steering: Hydrostatic, Adjustable Tilt Steering Column
- Implement System:
  Open Center System, Engine Driven Gear Pump
  17.5 GPM (66 LPM) flow to Remotes
  Optional Integrated Cable-controlled Loader Joystick with Mid Valves
- Rear Linkage:
  ASAE Category II with Telescopic Ball Ends
  Shared Pump with Implements
  Lift Capacity at 24": 3307 LBS (1500 KG)
  Adjustable Lift Rod, Turn Buckle Top Link
  Telescopic Stabilizers
- Swinging Drawbar

ELECTRICAL
- 12 Volt DC, Negative Ground
- Intake Air Pre Heater
- Wet, Maintenance Free 799 CCA Battery
  95 AMP Alternator
- Ignition: Key with Safety Start
- Keyed Engine Shutoff
- Lighting: 4 Headlights, 2 Rear Marker Light Assemblies
- 7 Pin ASAE Outlet Socket

INSTRUMENTS
- Digital and Analog Dash Display
- Digital Engine Tachometer
- Digital Fuel Gauge
- Digital Engine Temperature
- Digital Transmission Display
- Digital Hour Meter
- Operation and Service Lights

OPERATORS ENVIRONMENT (Platform Models)
- Flat Floor Platform
- Folding ROPS
- Seat: Adjustable Spring Cushion Vinyl with Armrests
- Retractable Seat Belt
- Pendant Style (Suspended) Foot Pedals
- Hand and Foot Throttle
- Left Side Foot Step

OPERATORS ENVIRONMENT (Cab Models)
- 6-post Cab With HVAC, Tinted Safety Glass, Front Windshield Wiper/Washer, Front and Rear Roof-mounted Working Lights, 2 Doors, Pre-wired for Audio System
- Right and Left Side View Mirrors
- Seat: Adjustable Spring Cushion with Armrests
- Retractable Seat Belt
- Pendant Style (Suspended) Foot Pedals
- Hand and Foot Throttle
- Left and Right Side Foot Step

OTHER STANDARD FEATURES
- Fuel Tank Under Platform, Ground Fill
  Fuel Capacity: 30.4 gallons (115 Liters)
- One-Piece Tilting Hood
- Tool Box
- SMV Emblem

LOADER FEATURES

MF931X and MF936X Loader
- One Piece Main Frame with Tapered Arms and Single Cross Member
- Quick Attach Loader Frame Mount with Pin Lock
- Built-in Parking Stands
- **NSL:** (2) 2.8 inch Double Acting Lift Cylinders
- **MSL:** (2) 2.6 inch Double Acting Lift Cylinders
- (2) 2.8 inch Double Acting Bucket Cylinders
- Hydraulic Lines Routed Inside Main Frame for Protection and Visibility
- Galvanized Steel Bushings with Recessed Grease Points
- Universal Skid Steer or Euro Hook Type Implement Attachments
- Standard with Flat Face Couplers

Fits MF4609M and 4610M 2wd and 4wd Tractor Models
- Rated on MF4610 Tractor with 11.2-24 Front Tires and 16.9-30 Rear Tires
- **NSL:** Lift Capacity to Full Height @ 31.5 inches Forward of Pivot Pin: 3020 lbs
- **MSL:** Lift Capacity to Full Height @ 31.5 inches Forward of Pivot Pin: 3430 lbs
- Maximum Lift Height: 136 inches at Pivot
- **NSL:** Breakout Force: 3540 lbs
- **MSL:** Breakout Force: 3660 lbs
- Rated Hydraulic Pressure: 2828 PSI
- Grille Guard Standard

MF4609M

MASSEY FERGUSON®

(F.O.B. PORT OF ENTRY)

Order Code	Catalog Number	Description	List Price
		ORDER TRACTOR THEN ORDER ONE CODE FROM GROUP 02 THROUGH 09 AS REQUIRED	
BASE MACHINE			**GROUP 01**
MF4609M	72530439	MF4609M Base Tractor	42,949.00
MF4609M-J	72530442	MF4609M Tractor with Loader Provisions **(4wd Only)** . . . Includes Loader Frame Rails, Factory Joystick, and Loader Valve **(Does not include Loader Uprights. See Loader Packages below, or Implement Price pages for other Loader Options)**	44,899.00
LOADER - For use with Tractor with Loader Provision Only			**GROUP 02**
		Non Self-Leveling	
	72533831	MF931X Loader Package - Skid Steer Style . . . . . Includes: Loader Uprights, Hose Kit and Grille Guard	5,699.00
	72533832	MF931X Loader Package - Euro Style . . . . . Includes: Loader Uprights, Hose Kit and Grille Guard	6,269.00
		Mechanical Self-Leveling	
	72533835	MF936X Loader Package - Skid Steer Style . . . . . Includes: Loader Uprights, Hose Kit and Grille Guard	6,449.00
	72533836	MF936X Loader Package - Euro Style . . . . . Includes: Loader Uprights, Hose Kit and Grille Guard	7,099.00

Note: For Additional Loader Options, Refer to Implements Price List Revision

ALL Tractors will be charged $325 for Assembly

OPERATOR ENVIRONMENT			**GROUP 03**
RE3	72530444	Platform	In Base
CE3	72530445	Standard Cab	9,279.00
CDE3	72530446	Deluxe Cab . . . . . (Requires 4wd, Factory Joystick with Loader Valve, Loader Frame Rails, and Float/Kickout Valves) Includes: 3-Point Hitch Fender Controls on Left Hand Side Fender, Air Ride Seat, 2 LED Lights Front and 2 LED Lights Rear, Rear Window Defrost, Rear Window Wiper, Front Pull Down Sun Visor, Antenna, and Speakers	12,779.00
FRONT AXLE			**GROUP 04**
F	72530448	4wd Front Axle	In Base
T	72530447	2wd Front Axle	(4,115.00)
TRANSMISSION			**GROUP 05**
	72530449	12 X 12 Hydraulic Shuttle	In Base
L	72530451	12 X 12 Hydraulic Shuttle with Creeper Gear . . . . . **Requires** 4wd and 1 Float + Kickout Valve and 1 Float Hydraulic Valve **Available** on Non-Loader Ready Models for any Operator Station, and Loader Ready Models with Deluxe Cab Only (Compatible with Dealer Installed Loaders)	1,239.00

MF4609M

(F.O.B. PORT OF ENTRY)

MASSEY FERGUSON®

Order Code	Catalog Number	Description	List Price
HYDRAULICS			**GROUP 06**
		4WD Hydraulic Options	
W	72530453	2 Spool Valves - Spring Return to Neutral	In Base for 4wd
K	72530455	1 Float + Kickout Valve and 1 Float Valve	339.00
		2WD Hydraulic Options	
V	72530454	1 Spool Valve - Spring Return to Neutral	In Base for 2wd
REAR AND FRONT TIRES			**GROUP 07**
	4WD Tires		
	72530414M	R: 16.9-30 R1 F: 11.2-24	4,161.00
	72530415M	R: 18.4-30 R1 F: 12.4-24	4,492.00
	72530416M	R: 16.9-34 R1 F: 12.4-24	4,612.00
	72530417M	R: 19.5L-24 R4 F: 12.5/80-18	4,635.00
	2WD Tires		
	72530420M	R: 16.9-30 R1 F: 9.5L-15	3,119.00
	72530421M	R: 16.9-30 R1 F: 7.50-18	3,127.00
	72530422M	R: 18.4-30 R1 F: 10.00-16	3,770.00
	72530423M	R: 16.9-34 R1 F: 10.00-16	3,667.00
BUCKET OPTIONS - Recommended with Loader Packages Only			**GROUP 08**
		Skid Steer Style	
	72533683ML	72-inch Skid Steer Material Bucket 180U, 17 cu ft	599.00
	72533684ML	84-inch Skid Steer Material Bucket 210U, 19 cu ft	759.00
		Euro Style	
	72533685ML	72-inch Euro Style Material Bucket 180U, 17 cu ft	659.00
	72533686ML	84-inch Euro Style Material Bucket 210U, 19 cu ft	839.00
MISCELLANEOUS OPTIONS			**GROUP 09**
	72533731ML	Grille Guard for Tractor without Loader	119.00

MF4610M

MASSEY FERGUSON®

(F.O.B. PORT OF ENTRY)

TRACTOR FEATURES

ENGINE SYSTEM
- Engine: AGCO Power 33AWIC 3 Cylinder (Turbocharged)
  99 Engine HP (74 kW) @ 2200 RPM
  80 PTO HP (59.7 kW) @ 2000 RPM
- EPA Tier 4 Final Compliant with SCR, CARB Certified
- Air Cleaner: Dual Element Dry Type
- Air Cleaner Intake, Under Hood
- Vertical Exhaust, A Pillar
- Cooling System: Antifreeze 50/50 Mix
- Cold Starting Aid: Intake Heater

FRONT AXLE
- 2wd: Adjustable
- 4wd: Center Driveline, Open Differential, Mechanical Engagement

POWER TRAIN
- Transmission:
  12 X 12 Power Shuttle with Left Hand Shuttle Lever
  6 Synchronized Gears, 2 Ranges
  Wet Multi-disc Clutch with Left Side Clutch Pedal
- Rear Axle: Inboard Planetary Final Drives, with Foot Operated Mechanical Differential Lock
- Brakes: Independent Oil Immersed Wet Disc Brakes with Independent Foot Pedal Operation
- Hook and Lever Parking Brake
- PTO: Independent 540 and 1000 RPM Speeds, 6 Spline Shaft and 21 Spline (1.375 In. Diameter), Independent Wet Disc Clutch, Electro-hydraulic Engagement

HYDRAULIC SYSTEM
- Steering: Hydrostatic, Adjustable Tilt Steering Column
- Implement System:
  Open Center System, Engine Driven Gear Pump
  17.5 GPM (66 LPM) flow to Remotes
  Optional Integrated Cable-controlled Loader Joystick with Mid Valves
- Rear Linkage:
  ASAE Category II with Telescopic Ball Ends
  Shared Pump with Implements
  Lift Capacity at 24": 3307 lbs (1500 kg)
  Adjustable Lift Rod, Turn Buckle Top Link
  Telescopic Stabilizers
- Swinging Drawbar

ELECTRICAL
- 12 Volt DC, Negative Ground
- Intake Air Pre Heater
- Wet, Maintenance Free 799 CCA Battery
  95 AMP Alternator
- Ignition: Key with Safety Start
- Keyed Engine Shutoff
- Lighting: 4 Headlights, 2 Rear Marker Light Assemblies
- 7 Pin ASAE Outlet Socket

INSTRUMENTS
- Digital and Analog Dash Display
- Digital Engine Tachometer
- Digital Fuel Gauge
- Digital Engine Temperature
- Digital Transmission Display
- Digital Hour Meter
- Operation and Service Lights

OPERATORS ENVIRONMENT (Platform Models)
- Flat Floor Platform
- Folding ROPS
- Seat: Adjustable Spring Cushion Vinyl with Armrests
- Retractable Seat Belt
- Pendant Style (Suspended) Foot Pedals
- Hand and Foot Throttle
- Left Side Foot Step

OPERATORS ENVIRONMENT (Cab Models)
- 6-post Cab With HVAC, Tinted Safety Glass, Front Windshield Wiper/Washer, Front and Rear Roof-mounted Working Lights, 2 Doors, Pre-wired for Audio System
- Right and Left Side View Mirrors
- Seat: Adjustable Spring Cushion with Armrests
- Retractable Seat Belt
- Pendant Style (Suspended) Foot Pedals
- Hand and Foot Throttle
- Left and Right Side Foot Step

OTHER STANDARD FEATURES
- Fuel Tank Under Platform, Ground Fill
  Fuel Capacity: 30.4 gallons (115 Liters)
- One-Piece Tilting Hood
- Tool Box
- SMV Emblem

LOADER FEATURES

MF931X and MF936X Loader
- One Piece Main Frame with Tapered Arms and Single Cross Member
- Quick Attach Loader Frame Mount with Pin Lock
- Built-in Parking Stands
- **NSL:** (2) 2.8 inch Double Acting Lift Cylinders
- **MSL:** (2) 2.6 inch Double Acting Lift Cylinders
- (2) 2.8 inch Double Acting Bucket Cylinders
- Hydraulic Lines Routed Inside Main Frame for Protection and Visibility
- Galvanized Steel Bushings with Recessed Grease Points
- Universal Skid Steer or Euro Hook Type Implement Attachments
- Standard with Flat Face Couplers

Fits MF4609M and 4610M 2wd and 4wd Tractor Models
- Rated on MF4610 Tractor with 11.2-24 Front Tires and 16.9-30 Rear Tires
- **NSL:** Lift Capacity to Full Height @ 31.5 inches Forward of Pivot Pin: 3020 lbs
- **MSL:** Lift Capacity to Full Height @ 31.5 inches Forward of Pivot Pin: 3430 lbs
- Maximum Lift Height: 136 inches at Pivot
- **NSL:** Breakout Force: 3540 lbs
- **MSL:** Breakout Force: 3660 lbs
- Rated Hydraulic Pressure: 2828 PSI
- Grille Guard Standard

MF4610M

(F.O.B. PORT OF ENTRY)

MASSEY FERGUSON®

Order Code	Catalog Number	Description	List Price
		ORDER TRACTOR THEN ORDER ONE CODE FROM GROUP 02 THROUGH 09 AS REQUIRED	
BASE MACHINE			**GROUP 01**
MF4610M	72530440	MF4610M Base Tractor	45,989.00
MF4610M-J	72530443	MF4610M Tractor with Loader Provisions **(4wd Only)** Includes Loader Frame Rails and Factory Joystick, and Loader Valve **(Does not include Loader Uprights. See Loader Packages below, or Implement Price pages for other Loader Options)**	47,939.00
LOADER - For use with Tractor with Loader Provision Only			**GROUP 02**
		Non Self-Leveling	
	72533831	MF931X Loader Package - Skid Steer Style Includes: Loader Uprights, Hose Kit and Grille Guard	5,699.00
	72533832	MF931X Loader Package - Euro Style Includes: Loader Uprights, Hose Kit and Grille Guard	6,269.00
		Mechanical Self-Leveling	
	72533835	MF936X Loader Package - Skid Steer Style Includes: Loader Uprights, Hose Kit and Grille Guard	6,449.00
	72533836	MF936X Loader Package - Euro Style Includes: Loader Uprights, Hose Kit and Grille Guard	7,099.00

Note: For Additional Loader Options, Refer to Implements Price List Revision

ALL Tractors will be charged $325 for Assembly

OPERATOR ENVIRONMENT			**GROUP 03**
RE3	72530444	Platform	In Base
CE3	72530445	Standard Cab	9,279.00
CDE3	72530446	Deluxe Cab (Requires 4wd, Factory Joystick with Loader Valve, Loader Frame Rails, and Float/Kickout Valves) Includes: 3-Point Hitch Fender Controls on Left Hand Side Fender, Air Ride Seat, 2 LED Lights Front and 2 LED Lights Rear, Rear Window Defrost, Rear Window Wiper, Front Pull Down Sun Visor, Antenna, and Speakers	12,779.00
FRONT AXLE			**GROUP 04**
F	72530448	4wd Front Axle	In Base
T	72530447	2wd Front Axle	(4,115.00)
TRANSMISSION			**GROUP 05**
	72530449	12 X 12 Hydraulic Shuttle	In Base
L	72530451	12 X 12 Hydraulic Shuttle with Creeper Gear **Requires** 4wd and 1 Float + Kickout Valve and 1 Float Hydraulic Valve **Available** on Non-Loader Ready Models for any Operator Station, and Loader Ready Models with Platform or Deluxe Cab Only (Compatible with Dealer Installed Loaders)	1,239.00

Order Code	Catalog Number	Description	List Price
HYDRAULICS			**GROUP 06**
		4WD Hydraulic Options	
W	72530453	2 Spool Valves - Spring Return to Neutral	In Base for 4wd
K	72530455	1 Float + Kickout Valve and 1 Float Valve	339.00
		2WD Hydraulic Options	
V	72530454	1 Spool Valve - Spring Return to Neutral	In Base for 2wd
REAR AND FRONT TIRES			**GROUP 07**
	4WD Tires		
	72530414M	R: 16.9-30 R1 F: 11.2-24	4,161.00
	72530415M	R: 18.4-30 R1 F: 12.4-24	4,492.00
	72530416M	R: 16.9-34 R1 F: 12.4-24	4,612.00
	72530417M	R: 19.5L-24 R4 F: 12.5/80-18	4,635.00
	2WD Tires		
	72530420M	R: 16.9-30 R1 F: 9.5L-15	3,119.00
	72530421M	R: 16.9-30 R1 F: 7.50-18	3,127.00
	72530422M	R: 18.4-30 R1 F: 10.00-16	3,770.00
	72530423M	R: 16.9-34 R1 F: 10.00-16	3,667.00
BUCKET OPTIONS - Recommended with Loader Packages Only			**GROUP 08**
		Skid Steer Style	
	72533683ML	72-inch Skid Steer Material Bucket 180U, 17 cu ft	599.00
	72533684ML	84-inch Skid Steer Material Bucket 210U, 19 cu ft	759.00
		Euro Style	
	72533685ML	72-inch Euro Style Material Bucket 180U, 17 cu ft	659.00
	72533686ML	84-inch Euro Style Material Bucket 210U, 19 cu ft	839.00
MISCELLANEOUS OPTIONS			**GROUP 09**
	72533731ML	Grille Guard for Tractor without Loader	119.00

FIELD ACCESSORIES

Please order these accessories through the AGCO Parts Division.
Consult the parts ordering system using oneAGCO Solutions-Online to determine current availability and pricing.

CATALOG NUMBER	DESCRIPTION	4607M	4609M	4610M	NOTES
HYDRAULICS					
7066736M93	Auxiliary Remote Valve	X	X	X	Spring Return to Neutral (SRN)
7066737M93	Auxiliary Float Valve	X	X	X	Manual return from Float Function
7069070M93	Kickout Float Combo Valve	X	X	X	Returns to Neutral at the end of Stroke, One installed per Tractor
7066739M92	Lever Kit	X	X	X	Works for all valves. Each Valve requires a Lever Kit.
7066738M91	Couplers for Remote Valve	X	X	X	Required for each Valve
7066037M94	Assist Cylinder for Rear 3-Point	X	X	X	Increases lift capacity from 3,417 lbs to 4,409 lbs
WEIGHTS & WHEEL EQUIPMENT					
7065137M3	Front Weight Frame	X	X	X	
3784628M93	Individual Front Weight 121 lbs (55 kg)	X	X	X	Up to 8 Front Weights Maximum
79018834	4 Bolt Rear Wheel Weight	X	X	X	For 34" Wheels Single weight (125 lbs) Maximum of 8 weights can fit on front weight frame
79018837	3 Bolt Rear Wheel Weight	X	X	X	For 30" Wheels Single weight (300 lbs)
HW45C	Hardware Kit for 1st Weight for Square Hole Wheels	X	X	X	For 34" Wheels/Promo 225
HW45H	Hardware Kit for 1st Weight for Round Hole Wheels	X	X	X	For 34" Wheels/Promo 225
HW45C	Hardware Kit to Add 1 Weight to Base Weight	X	X	X	For 34" Wheels/Promo 225
HW48C2-1	Hardware Kit to Add 2 Weights to Base Weight	X	X	X	For 34" Wheels/Promo 225
HW36C	Hardware Kit for 1st Weight for Square Hole Wheels	X	X	X	For 30" Wheels/Promo 225
HW36H	Hardware Kit for 1st Weight for Round Hole Wheels	X	X	X	For 30" Wheels/Promo 225
HW39H	Hardware Kit for Add on Weights	X	X	X	For 30" Wheels/Promo 225

MASSEY FERGUSON®

FIELD ACCESSORIES

Please order these accessories through the AGCO Parts Division.
Consult the parts ordering system using oneAGCO Solutions-Online to determine current availability and pricing.

CATALOG NUMBER	DESCRIPTION	4607M	4609M	4610M	NOTES
MISCELLANEOUS					
7066676M96	Creeper Transmission Kit	X	X	X	
V836640935	Block Heater	X	X	X	
7066151M91	Clevis Drawbar Set	X	X	X	
312013903	Fiberglass Canopy	X	X	X	For Platform Tractors only, attaches to ROPS
7066708M91	High-back Seat (Platform)	X	X	X	Attached to existing seat, raises seat back height
4330410M92	Beacon Light	X	X	X	Cab Tractors Only
72530463	Front Sun Visor	X	X	X	Cab Tractors Only
4283580M1	French Operators Manual	X	X	X	Order from Parts Technical Publications
TBD	Spanish Operators Manual	X	X	X	

MASSEY FERGUSON®

MF 4700
GLOBAL SERIES

MASSEY FERGUSON®

MF 4700 PLATFORM

(F.O.B. PORT OF ENTRY)

CLASSIC TRACTOR FEATURES (See Page 4 for Deluxe Package Options)

ENGINE SYSTEM
- AGCO Power 33AWIC 3 Cylinder
  (Turbocharged) with SCR and DOC
  EPA Tier 4 Final and CARB Certified
- Air Cleaner: Dual Element Dry Type
- Air Cleaner Intake, Under Hood
- Vertical Exhaust
- Cooling System: Antifreeze 50/50 Mix
- Cold Starting Aid: Intake Heater

HORSEPOWER
(Max Engine @ 2000 RPM; Rated Engine & PTO @ 2200 RPM)

MF4707 Deluxe Powershuttle Only:
75 Max Engine HP, 70 Engine HP, 58 PTO HP

MF4708 Classic Mechanical Shuttle:
85 Max Engine HP, 80 Engine HP, 68 PTO HP

MF4708 Deluxe Powershuttle:
85 Max Engine HP, 80 Engine HP, 67 PTO HP

MF4709 Classic Mechanical Shuttle:
95 Max Engine HP, 90 Engine HP, 78 PTO HP

MF4709 Deluxe Powershuttle:
95 Max Engine HP, 90 Engine HP, 77 PTO HP

MF4710 Classic Mechanical Shuttle:
100 Max Engine HP, 99 Engine HP, 88 PTO HP

MF4710 Deluxe Powershuttle:
100 Max Engine HP, 99 Engine HP, 87 PTO HP

FRONT AXLE
- 2wd: Adjustable
- 4wd: Center Driveline, Open Differential, Standard Limited Slip Differential [Hydralock included in **4707 Deluxe**]

POWERTRAIN
- Transmission:
  MF4708-4709 - 8 X 8 Synchro Mechanical Shuttle with Left Hand Shuttle Lever, 4 Synchronized Gears, 2 Ranges
  MF4707 Deluxe - 12 X 12 Synchro Power Shuttle with Left Hand Shuttle Lever, 6 Synchronized Gears, 2 Ranges
  MF4710 - 12 X 12 Synchro Mechanical Shuttle with Left Hand Shuttle Lever, 6 Synchronized Gears, 2 Ranges
- Rear Axle: Inboard Planetary Final Drives, with Push Button Operated Differential Lock, Flanged Rear Axle
- Brakes: Independent Oil Immersed Wet Disc Brakes with Independent Foot Pedal Operation
- Hook and Lever Parking Brake
- PTO: Independent 540/1000 RPM Dual Speed with 6 & 21 Spline Flanged Shafts (1-3/8 In. Diameter), Independent Wet Disc Clutch, Electro-hydraulic Engagement

HYDRAULIC SYSTEM
- 1 Mechanically Controlled Spool Valve [2 Mechanically Controlled Spool Valves included in **4707 Deluxe]**
- Implement System:
  Open Center System, Engine Driven Gear Pump
  17.1 GPM (65 LPM) Flow
  Optional Cable-controlled Loader Joystick with Mid Valves
- Rear Linkage:
  ASAE Category II with Telescopic Ball Ends
  Lift Capacity at 24": 4850 LBS (2200 KG)
  Single Adjustable Rear Linkage Turnbuckle, Top Link Draft Sensing
  Standard Chain Link Stabilizers [Telescopic Stabilizers included in **4707 Deluxe**]
- Swing Offset Drawbar with 350/400/500mm Positions, Cat 2 Clevis

ELECTRICAL
- 12 Volt DC, Negative Ground
- Intake Air Pre Heater
- Wet, Maintenance Free SAE 775 CCA Battery
- 80 AMP Alternator
- Ignition: Key with Safety Start
- Keyed Engine Shutoff
- Lighting: 4 Headlights, 2 Rear Marker Light Assemblies
- Rear Brake Lights
- Standard 1 Rear Work Light [Mid Mounted Work Lights included in **4707 Deluxe]**
- 7 Pin ASAE Outlet Socket
- 30 Amp Auxiliary Electrical Socket included in **4707 Deluxe**

INSTRUMENTS
- Digital and Analog Dash Display [Digital & Analog Instrument Panel with Performance Monitor included in **4707 Deluxe]**
- Analog Engine Tachometer
- Analog Fuel Gauge
- Analog Engine Temperature
- Digital Transmission Display
- Digital Hour Meter
- Operation and Service Lights

OPERATOR ENVIRONMENT (PLATFORM MODELS)
- Semi-Flat Floor Platform with Rubber Floor Mat
- Hand Rails with Glass Heat Shields
- Lever Controlled 3-Point Linkage [includes Draft Control for **4707 Deluxe**]
- 2 Post Folding ROPS
- Fixed Steering Column [Tilt Steering Column for **4707 Deluxe]**
- Seat: Adjustable Spring Cushion Vinyl
  [Adjustable Spring Suspension Seat with Armrests included in **4707 Deluxe**]
- Retractable Seat Belt
- Cup Holder
- Pendant Style (Suspended) Foot Pedals
- Hand and Foot Throttle
- Left Side and Right Side Foot Step Entry
- Rear Sided Fender Extension included in **4707 Deluxe**
- External 3-Point Lift Control on Left Hand Side Fender included for **4707 Deluxe**

OTHER STANDARD FEATURES
- Fuel Tank Under Platform, Ground Fill
  Fuel Capacity: 27.7 Gallons (105 Liters)
- Fuel Tank Guard included in **4707 Deluxe**
- One-Piece Tilting Hood
- Tool Box
- SMV Sign

MF 4700 PLATFORM

MASSEY FERGUSON®

(F.O.B. PORT OF ENTRY)

LOADER FEATURES

MF931X AND MF936X LOADERS

- One Piece Main Frame with Tapered Arms and Single Cross Member
- Quick Attach Loader Frame Mount with Pin Lock
- Built-in Parking Stands
- **NSL:** (2) 2.8 inch Double Acting Lift Cylinders
- **MSL:** (2) 2.6 inch Double Acting Lift Cylinders
- (2) 2.8 inch Double Acting Bucket Cylinders
- Hydraulic Lines Routed Inside Main Frame for Protection and Visibility
- Galvanized Steel Bushings with Recessed Grease Points
- Standard with Flat Face Couplers

MF931X AND MF936X LOADERS

- One Piece Main Frame with Tapered Arms and Single Cross Member
- Quick Attach Loader Frame Mount with Pin Lock
- Built-in Parking Stands
- **NSL:** (2) 2.8 inch Double Acting Lift Cylinders
- **MSL:** (2) 2.6 inch Double Acting Lift Cylinders
- (2) 2.8 inch Double Acting Bucket Cylinders
- Hydraulic Lines Routed Inside Main Frame for Protection and Visibility
- Galvanized Steel Bushings with Recessed Grease Points
- Standard with Flat Face Couplers

MF 4700 PLATFORM

MASSEY FERGUSON®

(F.O.B. PORT OF ENTRY)

Order Code	Catalog Number	Description	Approx. Weight (lb.)	List Price

ONE ORDER CODE FROM EACH GROUP MUST BE SPECIFIED (Unless In Base Option is Desired)

Certain options will require extended lead times from factory and are so noted.

BASE MACHINE - Deluxe Edition, Platform — GROUP 01

NOTE: MF4707 is only available as Deluxe Edition at this time. Deluxe Package Options are included in base.

2wd:

MF4707~201	7296123	Massey Ferguson 4707	35,699.00

4wd:

MF4707~401	7296124	Massey Ferguson 4707	39,799.00

BASE MACHINE - Classic Edition, Platform

2wd:

MF4708~201	7296034	Massey Ferguson 4708	41,369.00
MF4709~201	7296035	Massey Ferguson 4709	43,669.00
MF4710~201	7296004	Massey Ferguson 4710	46,719.00

4wd:

MF4708~401	7296036	Massey Ferguson 4708	45,469.00
MF4709~401	7296037	Massey Ferguson 4709	47,769.00
MF4710~401	7296007	Massey Ferguson 4710	50,819.00

ALL Tractors will be charged $325 for Assembly

LOADER PROVISION — GROUP 02

350-LL000	Base	Without Loader Provision.	**In Base**
350-LL001	7296088	Front Loader Provision includes Frame Rails, Uprights, Subframe, Hydraulic Kit with Joystick and Valve and Grille Guard	2,219.00

Order Code	Catalog Number	Description	Approx. Weight (lb.)	List Price

LOADER OPTIONS - 4wd Only — GROUP 03

For Factory Non-Loader Ready Classic Tractors Only

Non Self-Leveling

72533872	MF931X Loader Package - Skid Steer Style Includes: Subframe, Hydraulic Kit and Grille Guard		6,537.00
72533873	MF931X Loader Package - Euro Style Includes: Subframe, Hydraulic Kit and Grille Guard		7,107.00

Mechanical Self-Leveling

72533877	MF936X Loader Package - Skid Steer Style Includes: Subframe, Hydraulic Kit and Grille Guard		7,287.00
72533878	MF936X Loader Package - Euro Style Includes: Subframe, Hydraulic Kit and Grille Guard		7,937.00

For Factory Loader Ready Tractors - Requires LL001

Non Self-Leveling

7296155	MF931X Loader - Skid Steer Style with Hose Extension	775	4,393.00
7296156	MF931X Loader - Euro Style with Hose Extension	760	4,963.00

Mechanical Self-Leveling

7296158	MF936X Loader - Skid Steer Style with Hose Extension	920	5,143.00
7296159	MF936X Loader - Euro Style with Hose Extension	900	5,793.00

Note: For 2wd Tractors or Additional Loader Options, Refer to Implements Price List Revision

MARKETING PACKAGE — GROUP 04

Note: MF4707 is only available as Deluxe at this time. Deluxe Package Options are included In Base.

Deluxe Package Upgrade **for all Models** Includes: 12x12 Transmission with Power Shuttle (6 gears, 2 ranges with declutch on main gear lever), Telescopic Stabilizers, Switch Controlled 3-Point Linkage with Draft Control, External 3-Point Lift Control on Left Hand Side Fender, Hydralock Differential Lock, 2 Mechanically Controlled Spool Valves (1 x DA KO FL + 1 x DA KO FL), Digital & Analog Instrument Panel with Performance Monitor, Spring Suspension Seat with Armrests, 30 Amp Auxiliary Electrical Socket, Mid Mounted Work Lights, Rear Sided Fender Extensions, Fuel Tank Guard, Tilt Steering Column

	Deluxe Package Upgrade for 4708 or 4709		2,500.00
	Deluxe Package Upgrade for 4710		1,750.00

MF 4700 PLATFORM

(F.O.B. PORT OF ENTRY)

Order Code	Catalog Number	Description	Approx. Weight (lb.)	List Price
TRANSMISSION OPTION				**GROUP 05**
25-EA702	Base	8 X 8 Synchro Mechanical Shuttle 19 MPH (30 KPH) for 4708, 4709		**In Base**
25-EA706	Base	12 X 12 Synchro Mechanical Shuttle 25 MPH (40 KPH) for 4710		**In Base**
35-EN002	7296015	Creeper Gear (13.68:1 Reduction) **(Extended Factory Lead Time Approximately 120 Days)**		1,239.00
DRAFT CONTROL				**GROUP 06**
90-GD024	Base	Lever Controlled 3-Point Linkage without Draft Control		**In Base**
90-GD025	7296017	Switch Controlled 3-Point Linkage with Draft Control. (Included in Deluxe Edition) **(Extended Factory Lead Time Approximately 120 Days)**		225.00
AUXILIARY VALVES				**GROUP 07**
50-KX021	Base	1 Mechanically Controlled Spool Valve, (1 x DA FL)		**In Base**
50-KX032	7296021	2 Mechanically Controlled Spool Valves, (1 x DA KO FL + 1 x DA KO FL) (Included in Deluxe Edition)		969.00
PTO				**GROUP 08**
100-LA110	Base	540/1000 RPM Dual Speed PTO, External Control, with 6 and 21 Spline Flange PTO Shafts		**In Base**
100-LA108	7296025	540/540E RPM PTO, External Control, 540 RPM 6 Spline Non-Flanged Shaft (Cannot be Upgraded once this Option is Chosen) **(Extended Factory Lead Time Approximately 120 Days)**		(149.00)
EXHAUST				**GROUP 09**
40-CC004	Base	Vertical Exhaust with Heat Shield		**In Base**
40-CC025	7296029	Down Exhaust with Heat Shield (Available Q4 2016) **(Extended Factory Lead Time Approximately 120 Days)**		(49.00)

Order Code	Catalog Number	Description	Approx. Weight (lb.)	List Price
TIRE BRAND SELECTION				
70-Base	Base	Trelleborg Brand		No Charge

TIRES for 4707, 4708 and 4709

NOTE: Tire Options not In Base are Subject to Extended Factory Lead Time of Approximately 120 Days

FRONT AND REAR TIRES

		2WD - Flange Axle - Set of 2	
75-Base	7296802B1 7296700B2	Rear: 420/85R30 (16.9R30) R1W Front: 9.5L-15 F2 Fixed	**In Base**
75-W1837	7296803B1 7296700B2	Rear: 460/85R30 (18.4R30) R1W Front: 9.5L-15 F2 Fixed	359.00
75-W1834	7296809B1 7296700B2	Rear: 15.5R38 R1W Front: 9.5L-15 F2 Fixed	778.00
75-W1836	7296805B1 7296700B2	Rear: 420/85R34 (16.9R34) R1W Front: 9.5L-15 F2 Fixed	591.00
		4WD - Flange Axle - Set of 2	
75-Base	7296802B1 7296706B1	Rear: 420/85R30 (16.9R30) R1W Front: 320/85R24 (12.4R24) R1W	**In Base**
75-W1841	7296803B1 7296708B1	Rear: 460/85R30 (18.4R30) R1W Front: 340/85R24 (13.6R24) R1W	525.00
75-W1838	7296809B1 7296708B1	Rear: 15.5R38 R1W Front: 340/85R24 (13.6R24) R1W	944.00
75-W1840	7296805B1 7296708B1	Rear: 420/85R34 (16.9R34) R1W Front: 340/85R24 (13.6R24) R1W	757.00

TIRES for 4710

FRONT AND REAR TIRES

		2WD - Flange Axle - Set of 2	
75-Base	7296805B2 7296700B2	Rear: 420/85R34 (16.9R34) R1W Front: 9.5L-15 F2 Fixed	**In Base**
75-W1835	7296802B2 7296700B2	Rear: 420/85R30 (16.9R30) R1W Front: 9.5L-15 F2 Fixed	(591.00)
75-W1837	7296803B2 7296700B2	Rear: 460/85R30 (18.4R30) R1W Front: 9.5L-15 F2 Fixed	(232.00)
75-W1834	7296809B2 7296700B2	Rear: 15.5R38 R1W Front: 9.5L-15 F2 Fixed	187.00
		4WD - Flange Axle - Set of 2	
75-Base	7296805B2 7296708B2	Rear: 420/85R34 (16.9R34) R1W Front: 340/85R24 (13.6R24) R1W	**In Base**
75-W1839	7296802B2 7296706B2	Rear: 420/85R30 (16.9R30) R1W Front: 320/85R24 (12.4R24) R1W	(757.00)
75-W1841	7296803B2 7296708B2	Rear: 460/85R30 (18.4R30) R1W Front: 340/85R24 (13.6R24) R1W	(232.00)
75-W1838	7296809B2 7296708B2	Rear: 15.5R38 R1W Front: 340/85R24 (13.6R24) R1W	187.00

(F.O.B. PORT OF ENTRY)

Order Code	Catalog Number	Description	Approx. Weight (lb.)	List Price
REAR WHEEL WEIGHTS				**GROUP 11**
325-RD000	Base	Without Rear Wheel Weights.		**In Base**
325-RD093	7296085	2 Sets of 3 Wheel Weights 661 Lbs (300 Kg)	661	889.00
BUCKET OPTIONS - Recommended with Loader Packages Only				**GROUP 12**
		Skid Steer Style		
	72533683ML	72-inch Skid Steer Material Bucket 180U, 17 cu ft	390	599.00
	72533684ML	84-inch Skid Steer Material Bucket 210U, 19 cu ft	437	759.00
		Euro Style		
	72533685ML	72-inch Euro Style Material Bucket 180U, 17 cu ft	390	659.00
	72533686ML	84-inch Euro Style Material Bucket 210U, 19 cu ft	437	839.00
MISCELLANEOUS				**GROUP 13**
275-TC025	Base	English Language Operator's Manual		**In Base**
275-TC005	7296086	French Language Operator's Manual		No Charge
275-TC011	7296087	Spanish Language Operator's Manual		No Charge

MF 4700 CAB

MASSEY FERGUSON®

(F.O.B. PORT OF ENTRY)

CLASSIC TRACTOR FEATURES (See Page 10 for Deluxe Package Options)

ENGINE SYSTEM
- AGCO Power 33AWIC 3 Cylinder
  (Turbocharged) with SCR and DOC
  EPA Tier 4 Final and CARB Certified
- Air Cleaner: Dual Element Dry Type
- Air Cleaner Intake, Under Hood
- Vertical Exhaust
- Cooling System: Antifreeze 50/50 Mix
- Cold Starting Aid: Intake Heater

HORSEPOWER
(Max Engine @ 2000 RPM; Rated Engine & PTO @ 2200 RPM)

MF4707 Classic Mechanical Shuttle:
75 Max Engine HP, 70 Engine HP, 58 PTO HP

MF4707 Deluxe Powershuttle:
75 Max Engine HP, 70 Engine HP, 57 PTO HP

MF4708 Classic Mechanical Shuttle:
85 Max Engine HP, 80 Engine HP, 68 PTO HP

MF4708 Deluxe Powershuttle:
85 Max Engine HP, 80 Engine HP, 67 PTO HP

MF4709 Classic Mechanical Shuttle:
95 Max Engine HP, 90 Engine HP, 78 PTO HP

MF4709 Deluxe Powershuttle:
95 Max Engine HP, 90 Engine HP, 77 PTO HP

MF4710 Classic Mechanical Shuttle:
100 Max Engine HP, 99 Engine HP, 88 PTO HP

MF4710 Deluxe Powershuttle:
100 Max Engine HP, 99 Engine HP, 87 PTO HP

FRONT AXLE
- 2wd: Adjustable
- 4wd: Center Driveline, Open Differential, Standard Limited Slip Differential

POWERTRAIN
- Transmission:
  MF4707-4709 - 8 X 8 Synchro Mechanical Shuttle with Left Hand Shuttle Lever, 4 Synchronized Gears, 2 Ranges
  MF4710 - 12 X 12 Synchro Mechanical Shuttle with Left Hand Shuttle Lever, 6 Synchronized Gears, 2 Ranges
- Rear Axle: Inboard Planetary Final Drives, with Push Button Operated Mechanical Differential Lock, Flanged Rear Axle
- Brakes: Independent Oil Immersed Wet Disc Brakes with Independent Foot Pedal Operation
- Hook and Lever Parking Brake
- PTO: Independent 540/1000 RPM Dual Speed with 6 & 21 Spline Flanged Shafts (1.375 In. Diameter), Independent Wet Disc Clutch, Electro-hydraulic Engagement

HYDRAULIC SYSTEM
- 1 Mechanically Controlled Spool Valve
- Implement System:
  Open Center System, Engine Driven Gear Pump
  17.1 GPM (65 LPM) Flow
  Optional Cable-controlled Loader Joystick with Mid Valves and 3rd Function Ready Buttons
- Rear Linkage:
  ASAE Category II with Telescopic Ball Ends
  Lift Capacity at 24": 4850 LBS (2200 KG)
  Single Adjustable Rear Linkage Turnbuckle, Top Link Draft Sensing
  Standard Chain Link Stabilizers
- Swing Offset Drawbar with 350/400/500mm Positions, Cat 2 Clevis

ELECTRICAL
- 12 Volt DC, Negative Ground
- Intake Air Pre Heater
- Wet, Maintenance Free SAE 775 CCA Battery
- 80 AMP Alternator
- Ignition: Key with Safety Start
- Keyed Engine Shutoff
- Lighting: 4 Headlights, 2 Rear Marker Light Assemblies
- Rear Brake Lights
- Standard 1 Rear Work Light
- 7 Pin ASAE Outlet Socket

INSTRUMENTS
- Digital and Analog Dash Display]
- Analog Engine Tachometer
- Analog Fuel Gauge
- Analog Engine Temperature
- Digital Transmission Display
- Digital Hour Meter
- Operation and Service Lights

OPERATOR ENVIRONMENT (CAB MODELS)
- Standard Cab Roof, HVAC with Manual Controls, 2 Low Mounted Doors, Aerial and Speakers, 2 Front and 2 Rear Roof Mounted Work Lights
- Lever Controlled 3-Point Linkage
- Rubber Floor Mat
- Right and Left Side Folding Mirrors
- Tilt Steering Column
- Seat: Mechanical Spring Suspension with Armrests
- Retractable Seat Belt
- Cup Holder
- Pendant Style (Suspended) Foot Pedals
- Hand Rails with Glass Heat Shields
- Hand and Foot Throttle
- Left Side and Right Side Foot Step Entry

OTHER STANDARD FEATURES
- Fuel Tank Under Platform, Ground Fill
  Fuel Capacity: 27.7 Gallons (105 Liters)
- One-Piece Tilting Hood
- Tool Box, SMV Sign

MASSEY FERGUSON®

MF 4700 CAB

(F.O.B. PORT OF ENTRY)

LOADER FEATURES

MF931X AND MF936X LOADERS

- One Piece Main Frame with Tapered Arms and Single Cross Member
- Quick Attach Loader Frame Mount with Pin Lock
- Built-in Parking Stands
- **NSL:** (2) 2.8 inch Double Acting Lift Cylinders
- **MSL:** (2) 2.6 inch Double Acting Lift Cylinders
- (2) 2.8 inch Double Acting Bucket Cylinders
- Hydraulic Lines Routed Inside Main Frame for Protection and Visibility
- Galvanized Steel Bushings with Recessed Grease Points
- Standard with Flat Face Couplers

FITS MF4700 TRACTOR MODELS

- **NSL:** Lift Capacity to Full Height @ 31.5 inches Forward of Pivot Pin: 3020 lbs
- **MSL:** Lift Capacity to Full Height @ 31.5 inches Forward of Pivot Pin: 3430 lbs
- Maximum Lift Height: 136 inches at Pivot
- **NSL:** Breakout Force: 3540 lbs
- **MSL:** Breakout Force: 3660 lbs
- Rated Hydraulic Pressure: 2828 PSI
- Universal Skid Steer or Euro Hook Type Implement Attachments
- Grille Guard Standard

MF 4700 CAB

MASSEY FERGUSON®

(F.O.B. PORT OF ENTRY)

Order Code	Catalog Number	Description	Approx. Weight (lb.)	List Price

ONE ORDER CODE FROM EACH GROUP MUST BE SPECIFIED (Unless In Base Option is Desired)

Certain options will require extended lead times from factory and are so noted.

BASE MACHINE - Classic Edition, Cab — GROUP 01

NOTE: Classic Edition Cab models are not currently available.

2wd:

MF4707~201	7296065	Massey Ferguson 4707		42,699.00
MF4708~201	7296066	Massey Ferguson 4708		50,869.00
MF4709~201	7296067	Massey Ferguson 4709		53,169.00
MF4710~201	7296068	Massey Ferguson 4710		56,219.00

4wd:

MF4707~401	7296069	Massey Ferguson 4707		46,799.00
MF4708~401	7296070	Massey Ferguson 4708		54,969.00
MF4709~401	7296071	Massey Ferguson 4709		57,269.00
MF4710~401	7296072	Massey Ferguson 4710		60,319.00

ALL Tractors will be charged $325 for Assembly

LOADER PROVISION — GROUP 02

350-LL000	Base	Without Loader Provision.		**In Base**
350-LL001	7296161	Front Loader Provision includes Frame Rails, Uprights, Subframe, Hydraulic Kit with Joystick with Valve and 3rd Function Ready Buttons, and Grille Guard **(Extended Factory Lead Time Approximately 120 Days for 2wd Cab)**		2,299.00

LOADER OPTIONS - 4wd Only — GROUP 03

For Loader Ready Tractors - Requires LL001

Non Self-Leveling

	7296115	MF931X Loader - Skid Steer Style	775	4,318.00
	7296116	MF931X Loader - Euro Style	760	4,888.00

Mechanical Self-Leveling

	7296118	MF936X Loader - Skid Steer Style	920	5,068.00
	7296119	MF936X Loader - Euro Style	900	5,718.00

Note: For 2wd Tractors or Additional Loader Options, Refer to Implements Price List Revision

Order Code	Catalog Number	Description	Approx. Weight (lb.)	List Price
MARKETING PACKAGE				**GROUP 04**
		Deluxe Package Upgrade **for all Models** Includes: 12x12 Transmission with Power Shuttle (6 gears, 2 ranges with declutch on main gear lever), Telescopic Stabilizers, Switch Controlled 3-Point Linkage with Draft Control, External 3-Point Lift Control on Both Sides, Hydralock Differential Lock, 2 Mechanically Controlled Spool Valves (1 x DA KO FL + 1 x DA KO FL), Digital & Analog Instrument Panel with Performance Monitor, Mechanical Swiveling Seat with Armrests, Dual Adjustment Steering Column (Tilting and Telescopic), Internal Mirror, Telescopic Large Side Mirrors, Rear Wiper/Washer, Rear Sided Fender Extensions, Mid Mounted Work Lights, Fuel Tank Guard		
		Deluxe Package Upgrade for 4707, 4708 or 4709		3,300.00
		Deluxe Package Upgrade for 4710		2,550.00
TRANSMISSION OPTION				**GROUP 05**
25-EA702	Base	8 X 8 Synchro Mechanical Shuttle 19 MPH (30 KPH) for MF4707, 4708, 4709		**In Base**
25-EA706	Base	12 X 12 Synchro Mechanical Shuttle 25 MPH (40 KPH) for MF4710		**In Base**
35-EN002	7296015	Creeper Gear (13.68:1 Reduction) **(Extended Factory Lead Time Approximately 120 Days)**		1,239.00
DRAFT CONTROL				**GROUP 06**
90-GD024	Base	Lever Controlled 3-Point Linkage without Draft Control		**In Base**
90-GD025	7296017	Switch Controlled 3-Point Linkage with Draft Control. (Included in Deluxe Edition)		225.00
AUXILIARY VALVES				**GROUP 07**
50-KX021	Base	1 Mechanically Controlled Spool Valve, (1 x DA FL)		**In Base**
50-KX032	7296021	2 Mechanically Controlled Spool Valves, (1 x DA KO FL + 1 x DA KO FL) (Included in Deluxe Edition)		969.00
PTO				**GROUP 08**
100-LA110	Base	540/1000 RPM Dual Speed PTO, External Control, with 6 and 21 Spline Flange PTO Shafts		**In Base**
100-LA108	7296025	540/540E RPM PTO, External Control, 540 RPM 6 Spline Non-Flanged Shaft (Cannot be Upgraded once this Option is Chosen) **(Extended Factory Lead Time Approximately 120 Days**)		(149.00)
SEAT				**GROUP 09**
125-AE009	Base	Mechanical Spring Suspension Seat with Armrests		**In Base**
125-AE026	7296084	Air Suspended Swivel Seat with Armrests (Available as an Option for Deluxe Only)		800.00
EXHAUST				**GROUP 10**
40-CC004	Base	Vertical Exhaust with Heat Shield		**In Base**
40-CC025	7296029	Down Exhaust with Heat Shield (Available Q4 2016) **(Extended Factory Lead Time Approximately 120 Days)**		(49.00)

(F.O.B. PORT OF ENTRY)

Order Code	Catalog Number	Description	Approx. Weight (lb.)	List Price
TIRE BRAND SELECTION				
70-Base	Base	Trelleborg Brand		No Charge

TIRES for 4707, 4708 and 4709

NOTE: Tire Options not In Base or W1841 are Subject to Extended Factory Lead Time of Approximately 120 Days

FRONT AND REAR TIRES

		2WD - Flange Axle - Set of 2		
75-Base	7296802B1 7296700B2	Rear: 420/85R30 (16.9R30) R1W Front: 9.5L-15 F2 Fixed		**In Base**
75-W1837	7296803B1 7296700B2	Rear: 460/85R30 (18.4R30) R1W Front: 9.5L-15 F2 Fixed		359.00
75-W1834	7296809B1 7296700B2	Rear: 15.5R38 R1W Front: 9.5L-15 F2 Fixed		778.00
75-W1836	7296805B1 7296700B2	Rear: 420/85R34 (16.9R34) R1W Front: 9.5L-15 F2 Fixed		591.00
		4WD - Flange Axle - Set of 2		
75-Base	7296802B1 7296706B1	Rear: 420/85R30 (16.9R30) R1W Front: 320/85R24 (12.4R24) R1W		**In Base**
75-W1841	7296803B1 7296708B1	Rear: 460/85R30 (18.4R30) R1W Front: 340/85R24 (13.6R24) R1W		525.00
75-W1838	7296809B1 7296708B1	Rear: 15.5R38 R1W Front: 340/85R24 (13.6R24) R1W		944.00
75-W1840	7296805B1 7296708B1	Rear: 420/85R34 (16.9R34) R1W Front: 340/85R24 (13.6R24) R1W		757.00

TIRES for 4710

FRONT AND REAR TIRES

		2WD - Flange Axle - Set of 2		
75-Base	7296805B2 7296700B2	Rear: 420/85R34 (16.9R34) R1W Front: 9.5L-15 F2 Fixed		**In Base**
75-W1835	7296802B2 7296700B2	Rear: 420/85R30 (16.9R30) R1W Front: 9.5L-15 F2 Fixed		(591.00)
75-W1837	7296803B2 7296700B2	Rear: 460/85R30 (18.4R30) R1W Front: 9.5L-15 F2 Fixed		(232.00)
75-W1834	7296809B2 7296700B2	Rear: 15.5R38 R1W Front: 9.5L-15 F2 Fixed		187.00
		4WD - Flange Axle - Set of 2		
75-Base	7296805B2 7296708B2	Rear: 420/85R34 (16.9R34) R1W Front: 340/85R24 (13.6R24) R1W		**In Base**
75-W1839	7296802B2 7296706B2	Rear: 420/85R30 (16.9R30) R1W Front: 320/85R24 (12.4R24) R1W		(757.00)
75-W1841	7296803B2 7296708B2	Rear: 460/85R30 (18.4R30) R1W Front: 340/85R24 (13.6R24) R1W		(232.00)
75-W1838	7296809B2 7296708B2	Rear: 15.5R38 R1W Front: 340/85R24 (13.6R24) R1W		187.00

(F.O.B. PORT OF ENTRY)

Order Code	Catalog Number	Description	Approx. Weight (lb.)	List Price
REAR WHEEL WEIGHTS				**GROUP 12**
325-RD000	Base	Without Rear Wheel Weights.		**In Base**
325-RD093	7296085	2 Sets of 3 Wheel Weights 661 Lbs (300 Kg)	661	889.00
BUCKET OPTIONS - Recommended with Loader Packages Only				**GROUP 13**
		Skid Steer Style		
	72533683ML	72-inch Skid Steer Material Bucket 180U, 17 cu ft	390	599.00
	72533684ML	84-inch Skid Steer Material Bucket 210U, 19 cu ft	437	759.00
		Euro Style		
	72533685ML	72-inch Euro Style Material Bucket 180U, 17 cu ft	390	659.00
	72533686ML	84-inch Euro Style Material Bucket 210U, 19 cu ft	437	839.00
MISCELLANEOUS				**GROUP 14**
275-TC025	Base	English Language Operator's Manual		**In Base**
275-TC005	7296086	French Language Operator's Manual		No Charge
275-TC011	7296087	Spanish Language Operator's Manual		No Charge

FIELD ACCESSORIES

MASSEY FERGUSON®

Please order these accessories through the AGCO Parts Division. Consult the parts ordering system using oneAGCO Solutions-Online to determine current availability and pricing.

CATALOG NUMBER	DESCRIPTION	4707	4708	4709	4710	NOTES
HYDRAULICS						
4393116M11	2nd Spool Valve, Double Acting Float	X	X	X	X	Requires 4392848M14
4393115M11	2nd Spool Valve, Double Acting Float with Kickout	X	X	X	X	Requires 4392848M14
4392848M14	2nd Remote Valve Control Lever	X	X	X	X	
4393120M12	3rd Remote Valve, Double Acting Float with Kickout and Flow Divider	X	X	X	X	Requires 4392850M14 Only Available from 2 to 3 Valves
4392850M14	3rd Remote Valve Control Lever	X	X	X	X	
4305981M1	Cat 2 to Cat 1 Top Link Bushing	X	X	X	X	Reference GIMA Part 4305981H1
4305971M1	Cat 2 to Cat 1 Lower Link Bushing (order two)	X	X	X	X	Reference GIMA Part 4305971M1
WEIGHTS & WHEEL EQUIPMENT						
4349427M2	55 KG Front Weight - Single Weight	X	X	X	X	
ACW002695A	Front End Weight Hardware for 55 KG	X	X	X	X	Weights ordered separately
ACW0128050	Single Rear Wheel Weight Adaptor Hub (50 KG)	X	X	X	X	Requires Hardware Kit ACW0392850 - One Kit per Adapter
ACW0392850	Single Rear Wheel Weight Adaptor Hub Hardware Kit	X	X	X	X	One Kit Required per Adapter
ACW0128080	Single Rear Wheel Weight (50 KG)	X	X	X	X	Requires ACW0392870 Hardware Kit and ACW0128050 Adapter Weight
ACW0392870	Single Rear Wheel Weight Hardware Kit	X	X	X	X	One Kit Required per Weight

FIELD ACCESSORIES

MASSEY FERGUSON®

Please order these accessories through the AGCO Parts Division. Consult the parts ordering system using oneAGCO Solutions-Online to determine current availability and pricing.

CATALOG NUMBER	DESCRIPTION	4707	4708	4709	4710	NOTES
MISCELLANEOUS						
ACW0026370	Front Tow Hitch and Front Tow Pin	X	X	X	X	
ACW0089550	Nose Grille Guard	X	X	X	X	
ACW0709820	Block Heater (110V)	X	X	X	X	
4392117M11	Fuel Tank Shield, Semi-Platform	X	X	X	X	
ACW0142450	Lockable Fuel Cap with Key	X	X	X	X	
ACW0141220	Lockable DEF Cap with Key	X	X	X	X	
ACW0142460	Fuel and DEF Cap with Key	X	X	X	X	
ACW002869B	Sun Canopy	X	X	X	X	FOPS Compliant
ACW0787760	Auxiliary Seat Kit	X	X	X	X	For Cab Models Only
ACW0038210	Armrests	X	X	X	X	
3617848M91	Cigar/Cigarette Heater Element	X	X	X	X	For Cab Models Only - Male heater element that fits into Cigar Socket
ACW0929370	355mm Plastic Front Fender	X	X	X	X	Requires Hardware Kit ACW0929490
ACW0929310	410mm Plastic Front Fender	X	X	X	X	
ACW0927320	470mm Plastic Front Fender	X	X	X	X	
ACW0929490	Pivoting Front Fenders Hardware Kit, <1200mm (47")	X	X	X	X	
ACW0929500	Pivoting Front Fenders Hardware Kit, >1200mm (47")					
ACW002806B	Rotating Beacon Light	X	X	X	X	
ACW0667950	Telemetry	X	X	X	X	

MASSEY FERGUSON®

MF 5700
GLOBAL SERIES

MASSEY FERGUSON®

MF 5700 PLATFORM

(F.O.B. PORT OF ENTRY)

CLASSIC TRACTOR FEATURES (See Page 4 for Deluxe Package Options)

ENGINE SYSTEM
- 4.4L 4-Cylinder AGCO Power
- EPA Tier 4 Final and CARB Certified
- Air Cleaner: Dual Element Dry Type
- Air Cleaner Intake, Under Hood
- Vertical Exhaust
- Cooling System: Antifreeze 50/50 Mix
- Cold Starting Aid: Intake Heater

HORSEPOWER
(Max Engine @ 2000 RPM; Rated Engine & PTO @ 2200 RPM)

MF5710 Classic Mechanical Shuttle:
100 Max Engine HP, 95 Engine HP, 83 PTO HP

MF5710 Deluxe Powershuttle:
100 Max Engine HP, 95 Engine HP, 82 PTO HP

MF5711 Classic Mechanical Shuttle:
110 Max Engine HP, 105 Engine HP, 93 PTO HP

MF5711 Deluxe Powershuttle:
110 Max Engine HP, 105 Engine HP, 92 PTO HP

FRONT AXLE
- 2wd: Adjustable
- 4wd: Center Driveline, Open Differential, Standard Hydraulically Actuated Differential Lock

POWERTRAIN
- Transmission: 24.8 mph (40 kph)
  12 X 12 Synchro Mechanical Shuttle with Left Hand Shuttle Lever, 6 Synchronized Gears, 2 Ranges
- Rear Axle: Inboard Planetary Final Drives, with Push Button Operated Mechanical Differential Lock, Flanged Rear Axle
- Brakes: Independent Oil Immersed Wet Disc Brakes with Independent Foot Pedal Operation
- Hook and Lever Parking Brake
- PTO: Independent 540 and 1000 RPM Speeds, 6 and 21 Spline Flanged Shafts standard (1.375 In. Diameter), Independent Wet Disc Clutch, Electro-hydraulic Engagement

HYDRAULIC SYSTEM
- Implement System:
  Open Center System, Engine Driven Gear Pump, 15.0 GPM (57 LPM) Flow
  Optional Cable-controlled Loader Joystick with Mid Valves
- 2 Mechanical Controlled Spool Valves (1 x DA KO FL + 1 x DA KO FL)
- Rear Linkage:
  ASAE Category II with Telescopic Ball Ends
  Lift Capacity at 24": 7716 lbs (3500 kg)
  2 Adjustable Rear Linkage Turnbuckles
  Standard Telescopic Stabilizers
- Swing Offset Drawbar with 350/400/500mm Positions, Cat 2 Clevis

ELECTRICAL
- 12 Volt DC, Negative Ground
- Intake Air Pre Heater
- Wet, Maintenance Free SAE 775 CCA Battery
  80 AMP Alternator
- Ignition: Key with Safety Start
- Keyed Engine Shutoff
- Lighting: 4 Headlights, 2 Rear Marker Light Assemblies
- Rear Brake Lights
- Standard 1 Rear Work Light
- 7 Pin ASAE Outlet Socket

INSTRUMENTS
- Digital and Analog Dash Display
- Analog Engine Tachometer
- Analog Fuel Gauge
- Analog Engine Temperature
- Digital Transmission Display
- Digital Hour Meter
- Operation and Service Lights

OPERATOR ENVIRONMENT (PLATFORM MODELS)
- Flat Floor Platform - ISO Mounted
- Rubber Floor Mat
- Hand Rails with Glass Heat Shields
- Lever Controlled 3-Point Linkage without Draft Control
- 2 Post Folding ROPS
- Tilt Steering Column
- Seat: Mechanical Spring Suspension
- Retractable Seat Belt
- Cup Holder
- Pendant Style (Suspended) Foot Pedals
- Hand and Foot Throttle
- Left Side and Right Side Foot Step Entry

OTHER STANDARD FEATURES
- One-Piece Tilting Hood
- Tool Box
- SMV Sign

MF 5700 PLATFORM

MASSEY FERGUSON®

(F.O.B. PORT OF ENTRY)

LOADER FEATURES

MF941X AND MF946X LOADERS
FITS ALL MF5700 / MF6700 GLOBAL SERIES TRACTORS

- One Piece Main Frame with Tapered Arms and Single Cross Member, Powder Painted with Corrosion Protection
- Quick Attach Loader Frame Mount with Pin Lock and Built in Parking Stands
- 5 mm High Tensile, Tapered Box Section Frame
- 70 mm Arm Profile
- 75 mm Double Acting Lift Cylinders **(MF941X)**
- 70 mm Double Acting Lift Cylinders **(MF946X)**
- 75 mm Double Acting Bucket Cylinders **(MF941X)**
- 75 mm Double Acting Bucket Cylinders, Equal Displacement **(MF946X)**
- Hydraulic Lines Routed Inside Main Frame for Protection and Visibility
- Pivots have Recessed Greasable Galvanized Steel Pins with Bushings at Key Points
- 4-Flat Face Hydraulic Tips on Boom and Bucket Circuits
- Protective Hose Cover
- Bucket Level Indicator
- **NSL:** Lift Capacity to Full Height @ 31.5 inches Forward of Pivot Pin: 2220 lbs (1010 kg)
- **MSL:** Lift Capacity to Full Height @ 31.5 inches Forward of Pivot Pin: 3500 lbs (1590 kg)
- Maximum Lift Height: 148 inches at Pivot
- Rated Hydraulic Pressure: 2828 PSI
- Maximum Roll Back Angle: 49 Degrees
- Maximum Dump Angle: 42 Degrees
- Universal Euro Hook Type Implement Attachments
- Grille Guard Standard

MF941 AND MF946 LOADERS
FITS ALL MF5700 / MF6700 GLOBAL SERIES TRACTORS

- One Piece Main Frame Arms and Compression Molded Curved Cross Member
- Quick Attach Implement Mounting with Euro Style Single Lever Locking System
- 5 mm High Tensile, Tapered Box Section Frame
- 70 mm Arm Profile
- 80 mm Double Acting Lift Cylinders **(MF941)**
- 75 mm Double Acting Lift Cylinders **(MF946)**
- 80 mm Double Acting Bucket Cylinders **(MF 941)**
- 80 mm Double Acting Bucket Cylinders, Equal Displacement **(MF 946)**
- Industrial Grade Hydraulic Fittings and Hoses, Incorporated Internally Inside Loader Boom
- Central Valve, Equalized Oil Distribution Valve with Incorporated Relief Valves
- 4-Flat Face Hydraulic Tips on Boom and Bucket Circuits
- Protective Hose Cover
- **NSL:** Lift Capacity to Full Height @ 31.5 inches Forward of Pivot Pin: 3020 lbs
- **MSL:** Lift Capacity to Full Height @ 31.5 inches Forward of Pivot Pin: 3430 lbs
- Maximum Lift Height: 136 inches at Pivot
- **NSL:** Breakout Force: 3540 lbs
- **MSL:** Breakout Force: 3660 lbs
- Rated Hydraulic Pressure: 2828 PSI
- Universal Euro Hook Type Implement Attachments
- Grille Guard Standard

MASSEY FERGUSON®

MF 5700 PLATFORM

(F.O.B. PORT OF ENTRY)

Order Code	Catalog Number	Description	Approx. Weight (lb.)	List Price

ONE *ORDER CODE* FROM EACH GROUP MUST BE SPECIFIED (Unless In Base Option is Desired)

BASE MACHINE

CLASSIC PLATFORM MODELS

2wd

MF5710~201	7296093	Massey 5710		51,702.00

4wd

MF5710~401	7296094	Massey 5710		56,863.00
MF5711~401	7296095	Massey 5711		59,363.00

ALL Tractors will be charged $325 for Assembly

LOADER PROVISION

350-LL000	Base	Without Loader Provision		**In Base**
350-LL001	7296152	Front Loader Provision includes Frame Rails, Uprights, Subframe, Hydraulic Kit with Joystick and Valve, and Grille Guard		4,260.00

LOADER OPTIONS - 4wd Only

For Factory Loader Ready Tractors - Requires LL001

Non Self-Leveling

7296139	MF941X Loader - Euro Style, with Hose Extension Kit .	794	5,175.00
7296141	MF941 Loader - Euro Style, with Hose Extension Kit . .	1135	5,742.00

Mechanical Self-Leveling

7296143	MF946X Loader - Euro Style, with Hose Extension Kit .	926	6,030.00
7296145	MF946 Loader - Euro Style, with Hose Extension Kit . .	1290	7,873.00

Note: For Additional Loader Options, Refer to Implements Price List Revision

MARKETING PACKAGE

Deluxe Package Upgrade **for all Models** Includes: 12x12 Transmission with Power Shuttle (6 gears, 2 ranges with declutch on main gear lever), Lever Controlled 3-Point Linkage with Easy Lift/Lower Option and Draft Control, External 3-Point Lift Control on Left Hand Side Fender, Hydraulic Auxiliary Flow - 26 GPM (98 L/min) High Flow Open Center System with Combined Flow, Engine RPM Memory Swith, 540/540E/1000 RPM Flanged PTO, Internal Control, 6 and 21 Spline Shafts, Digital & Analog Instrument Panel with Performance Monitor, 30 Amp Auxiliary Electrical Socket, Mid Mounted Work Lights, Rear Sided Fender Extensions, Fuel Tank Guard

Deluxe Package Upgrade 1,837.00

Note: Ordering a Deluxe Marketing Package will produce different Base Catalog numbers in eOrdering.

CREEPER GEAR

35-EN000	Base	Without Creeper Gear.	**In Base**
35-EN002	7296147	Creeper Gear (13.68:1 Reduction) . . . . . **(Extended Factory Lead Time Approximately 120 Days)**	1,368.00

(F.O.B. PORT OF ENTRY)

Order Code	Catalog Number	Description	Approx. Weight (lb.)	List Price
TIRE BRAND SELECTION				
70-TD0010	Base	Trelleborg Brand		**In Base**
FRONT AND REAR TIRES				
		NOTE: Tire Options not In Base are Subject to Extended Factory Lead Time of Approximately 120 Days		
		2WD - Flange Axle - Set of 2		
TIRES FOR 5710 ONLY				
75-Base	7296816B3 7296703B3	Rear: 460/85R34 (18.4R34) R1W . . . . . Front: 10.00-16 F2 Fixed		**In Base**
75-W1871	7296803B3 7296703B3	Rear: 460/85R30 (18.4R30) R1W . . . . . Front: 10.00-16 F2 Fixed		(161.00)
		4WD - Flange Axle - Set of 2		
TIRES FOR 5710 AND 5711				
75-Base	7296816B3 7296718B3	Rear: 460/85R34 (18.4R34) R1W . . . . . Front: 380/85R24 (14.9R24) R1W		**In Base**
75-W1841	7296803B3 7296708B3	Rear: 460/85R30 (18.4R30) R1W . . . . . Front: 340/85R24 (13.6R24) R1W		(535.00)
75-W1844	7296804B3 7296707B3	Rear: 340/85R38 (13.6R38) R1W . . . . . Front: 280/85R28 (11.2R28) R1W		(1,729.00)
75-W1840	7296805B3 7296708B3	Rear: 420/85R34 (16.9R34) R1W . . . . . Front: 340/85R24 (13.6R24) R1W		(903.00)
75-W1886	7296817B3 7296719B3	Rear: 420/85R38 (16.9R38) R1W . . . . . Front: 340/85R28 (13.6R28) R1W		(128.00)
REAR WHEEL WEIGHTS				
325-RD000	Base	Without Rear Wheel Weights		**In Base**
325-RD093	7296154	2 Sets of 3 Wheel Weights 661 Lbs (300 Kg) . . . . . **(Extended Factory Lead Time Approximately 120 Days)**	661	981.00

(F.O.B. PORT OF ENTRY)

Order Code	Catalog Number	Description	Approx. Weight (lb.)	List Price
BUCKET OPTIONS - Recommended with Loader Packages Only				
	Euro Style			
	72556223ML	83-inch Material Bucket 210S, 19 cu ft (0.70 cu yds). .	496	1,089.00
	72556038ML	83-inch Material Bucket 210H, 24 cu ft (0.89 cu yds) .	556	1,372.00
MISCELLANEOUS				
275-TC025	Base	English Language Operator's Manual		**In Base**
275-TC005	7296086	French Language Operator's Manual		No Charge
275-TC011	7296087	Spanish Language Operator's Manual		No Charge

MF 5700 CAB

MASSEY FERGUSON®

(F.O.B. PORT OF ENTRY)

CLASSIC TRACTOR FEATURES (See Page 11 for Deluxe Package Options)

ENGINE SYSTEM
- 4.4L 4-Cylinder AGCO Power
- EPA Tier 4 Final and CARB Certified
- Air Cleaner: Dual Element Dry Type
- Air Cleaner Intake, Under Hood
- A-Pillar Exhaust with Heat Shield
- Cooling System: Antifreeze 50/50 Mix
- Cold Starting Aid: Intake Heater

HORSEPOWER
(Max Engine @ 2000 RPM; Rated Engine & PTO @ 2200 RPM)

MF5710 Classic Mechanical Shuttle:
100 Max Engine HP, 95 Engine HP, 83 PTO HP

MF5710 Deluxe Powershuttle:
100 Max Engine HP, 95 Engine HP, 82 PTO HP

MF5711 Classic Mechanical Shuttle:
110 Max Engine HP, 105 Engine HP, 93 PTO HP

MF5711 Deluxe Powershuttle:
110 Max Engine HP, 105 Engine HP, 92 PTO HP

FRONT AXLE
- 2wd: Adjustable
- 4wd: Center Driveline, Open Differential, Standard Hydraulically Actuated Differential Lock

POWERTRAIN
- Transmission: 24.8 mph (40 kph)
  12 X 12 Synchro Mechanical Shuttle with Left Hand Shuttle Lever, 6 Synchronized Gears, 2 Ranges
- Rear Axle: Inboard Planetary Final Drives, with Push Button Operated Mechanical Differential Lock, Flanged Rear Axle
- Brakes: Independent Oil Immersed Wet Disc Brakes with Independent Foot Pedal Operation
- Hook and Lever Parking Brake
- PTO: Independent 540 and 1000 RPM Speeds, 6 and 21 Spline Flanged Shafts standard (1.375 In. Diameter), Independent Wet Disc Clutch, Electro-hydraulic Engagement

HYDRAULIC SYSTEM
- Implement System:
  Open Center System, Engine Driven Gear Pump, 15.0 GPM (57 LPM) Flow
  Optional Cable-controlled Loader Joystick with Mid Valves and 3rd Function Ready Buttons
- 2 Mechanical Controlled Spool Valves (1 x DA KO FL + 1 x DA KO FL)
- Rear Linkage:
  ASAE Category II with Telescopic Ball Ends
  Lift Capacity at 24": 7716 lbs (3500 kg)
  2 Adjustable Rear Linkage Turnbuckles, Standard Telescopic Stabilizers
- Swing Offset Drawbar with 350/400/500mm Positions, Cat 2 Clevis

ELECTRICAL
- 12 Volt DC, Negative Ground
- Intake Air Pre Heater
- Wet, Maintenance Free SAE 775 CCA Battery
  120 AMP Alternator
- Ignition: Key with Safety Start
- Keyed Engine Shutoff
- Lighting: 4 Headlights, 2 Rear Marker Light Assemblies
- Rear Brake Lights
- 7 Pin ASAE Outlet Socket
- 30 Amp Auxiliary Electrical Socket

INSTRUMENTS
- Digital and Analog Dash Display
- Analog Engine Tachometer
- Analog Fuel Gauge
- Analog Engine Temperature
- Digital Transmission Display
- Digital Hour Meter
- Operation and Service Lights

OPERATOR ENVIRONMENT (CAB MODELS)
- Standard Cab Roof, HVAC with Manual Controls, 2 Low Mounted Doors, Aerial and Speakers, 2 Front and 2 Rear Roof Mounted Work Lights
- Lever Controlled 3-Point Linkage without Draft Control
- Rubber Floor Mat
- Right and Left Side Folding Mirrors
- Tilt Steering Column
- Seat: Mechanical Spring Suspension with Armrests
- Retractable Seat Belt
- Cup Holder
- Pendant Style (Suspended) Foot Pedals
- Hand Rails
- Hand and Foot Throttle
- Left Side and Right Side Foot Step Entry

OTHER STANDARD FEATURES
- One-Piece Tilting Hood
- Tool Box
- SMV Sign

MASSEY FERGUSON®

MF 5700 CAB

(F.O.B. PORT OF ENTRY)

LOADER FEATURES

MF941X AND MF946X LOADERS
FITS ALL MF5700 / MF6700 GLOBAL SERIES TRACTORS

- One Piece Main Frame with Tapered Arms and Single Cross Member, Powder Painted with Corrosion Protection
- Quick Attach Loader Frame Mount with Pin Lock and Built in Parking Stands
- 5 mm High Tensile, Tapered Box Section Frame
- 70 mm Arm Profile
- 75 mm Double Acting Lift Cylinders **(MF941X)**
- 70 mm Double Acting Lift Cylinders **(MF946X)**
- 75 mm Double Acting Bucket Cylinders **(MF941X)**
- 75 mm Double Acting Bucket Cylinders, Equal Displacement **(MF946X)**
- Hydraulic Lines Routed Inside Main Frame for Protection and Visibility
- Pivots have Recessed Greasable Galvanized Steel Pins with Bushings at Key Points
- 4-Flat Face Hydraulic Tips on Boom and Bucket Circuits
- Protective Hose Cover
- Bucket Level Indicator
- **NSL:** Lift Capacity to Full Height @ 31.5 inches Forward of Pivot Pin: 2220 lbs (1010 kg)
- **MSL:** Lift Capacity to Full Height @ 31.5 inches Forward of Pivot Pin: 3500 lbs (1590 kg)
- Maximum Lift Height: 148 inches at Pivot
- Rated Hydraulic Pressure: 2828 PSI
- Maximum Roll Back Angle: 49 Degrees
- Maximum Dump Angle: 42 Degrees
- Universal Euro Hook Type Implement Attachments
- Grille Guard Standard

MF941 AND MF946 LOADERS
FITS ALL MF5700 / MF6700 GLOBAL SERIES TRACTORS

- One Piece Main Frame Arms and Compression Molded Curved Cross Member
- Quick Attach Implement Mounting with Euro Style Single Lever Locking System
- 5 mm High Tensile, Tapered Box Section Frame
- 70 mm Arm Profile
- 80 mm Double Acting Lift Cylinders **(MF941)**
- 75 mm Double Acting Lift Cylinders **(MF946)**
- 80 mm Double Acting Bucket Cylinders **(MF941)**
- 80 mm Double Acting Bucket Cylinders, Equal Displacement **(MF946)**
- Industrial Grade Hydraulic Fittings and Hoses, Incorporated Internally Inside Loader Boom
- Central Valve, Equalized Oil Distribution Valve with Incorporated Relief Valves
- 4-Flat Face Hydraulic Tips on Boom and Bucket Circuits
- Protective Hose Cover
- **NSL:** Lift Capacity to Full Height @ 31.5 inches Forward of Pivot Pin: 3020 lbs
- **MSL:** Lift Capacity to Full Height @ 31.5 inches Forward of Pivot Pin: 3430 lbs
- Maximum Lift Height: 136 inches at Pivot
- **NSL:** Breakout Force: 3540 lbs
- **MSL:** Breakout Force: 3660 lbs
- Rated Hydraulic Pressure: 2828 PSI
- Universal Euro Hook Type Implement Attachments
- Grille Guard Standard

MF 5700 CAB

MASSEY FERGUSON®

(F.O.B. PORT OF ENTRY)

Order Code	Catalog Number	Description	Approx. Weight (lb.)	List Price

ONE *ORDER CODE* FROM EACH GROUP MUST BE SPECIFIED (Unless In Base Option is Desired)

BASE MACHINE

CLASSIC CAB MODELS

2wd

MF5710~201	7296099	Massey 5710		59,558.00

4wd

MF5710~401	7296100	Massey 5710		64,719.00
MF5711~401	7296101	Massey 5711		67,219.00

ALL Tractors will be charged $325 for Assembly

LOADER PROVISION

350-LL000	Base	Without Loader Provision		**In Base**
350-LL001	7296162	Front Loader Provision includes Frame Rails, Uprights, Subframe, Hydraulic Kit with Joystick with Valve and 3rd Function Ready Buttons, and Grille Guard **(Extended Factory Lead Time Approximately 120 Days for MF5710 2wd Cab**		4,340.00

LOADER OPTIONS - 4wd Only

For Factory Loader Ready Tractors - Requires LL001

Non Self-Leveling

7296140	MF941X Loader - Euro Style		794	5,100.00
7296142	MF941 Loader - Euro Style		1135	5,667.00

Mechanical Self-Leveling

7296144	MF946X Loader - Euro Style		926	5,955.00
7296146	MF946 Loader - Euro Style		1290	7,798.00

Note: For Additional Loader Options, Refer to Implements Price List Revision

MARKETING PACKAGE

Deluxe Package Upgrade **for all Models** Includes: 12x12 Transmission with Power Shuttle (6 gears, 2 ranges with declutch on main gear lever), Electric Controlled 3-Point Linkage with Draft Control, External 3-Point Lift Control on Left and Right Hand Side Fenders, Hydraulic Auxiliary Flow -26 GPM (98 L/min) High Flow Open Center System with Combined Flow, Engine RPM Memory Switch, 540/540E/1000 RPM Flanged PTO, Internal Control, 6 and 21 Spline Shafts, Digital & Analog Instrument Panel with Performance Monitor, Mechanical Swiveling Seat with Armrests, Instructors Seat, Rear Wiper/Washer, Telescopic Large Side Mirrors, Internal Mirror, Dual Adjustment Steering Column (Tilting and Telescopic), Mid Mounted Work Lights, Rear Sided Fender Extensions, Fuel Tank Guard

Deluxe Package Upgrade 3,080.00

Note: Ordering a Deluxe Marketing Package will produce different Base Catalog numbers in eOrdering.

(F.O.B. PORT OF ENTRY)

Order Code	Catalog Number	Description	Approx. Weight (lb.)	List Price
CREEPER GEAR				
35-EN000	Base	Without Creeper Gear		**In Base**
35-EN002	7296147	Creeper Gear (13.68:1 Reduction) . . . . . **(Extended Factory Lead Time Approximately 120 Days)**		1,368.00
AUXILIARY VALVES				
50-KX032	Base	2 Mechanically Controlled Spool Valves, ... (1 x DA KO FL + 1 x DA KO FL)		**In Base**
50-KX044	7296149	3 Mechanically Controlled Spool Valves, ... (1 x DA KO FL + 1 x DA KO FL + 1 x DA FD KO FL) (For Cab Models Only) **(Extended Factory Lead Time Approximately 120 Days)**		1,212.00
SEAT				
125-AE009	Base	Mechanical Spring Suspension Seat with Armrests . . .		**In Base**
125-AE026	7296151	Air Suspended Swivel Seat with Armrests . . . . . (Only Available on Deluxe Editions) **(Extended Factory Lead Time Approximately 120 Days)**		185.00

MASSEY FERGUSON®

(F.O.B. PORT OF ENTRY)

Order Code	Catalog Number	Description	Approx. Weight (lb.)	List Price
TIRE BRAND SELECTION				
70-TD0010	Base	Trelleborg Brand		**In Base**
FRONT AND REAR TIRES				
		NOTE: Tire Options not In Base are Subject to Extended Factory Lead Time of Approximately 120 Days		
		2WD - Flange Axle - Set of 2		
TIRES FOR 5710 ONLY				
75-Base	7296816B3 7296703B3	Rear: 460/85R34 (18.4R34) R1W . . . . . Front: 10.00-16 F2 Fixed		**In Base**
75-W1871	7296803B3 7296703B3	Rear: 460/85R30 (18.4R30) R1W . . . . . Front: 10.00-16 F2 Fixed		(161.00)
		4WD - Flange Axle - Set of 2		
TIRES FOR 5710 AND 5711				
75-Base	7296816B3 7296718B3	Rear: 460/85R34 (18.4R34) R1W . . . . . Front: 380/85R24 (14.9R24) R1W		**In Base**
75-W1841	7296803B3 7296708B3	Rear: 460/85R30 (18.4R30) R1W . . . . . Front: 340/85R24 (13.6R24) R1W		(535.00)
75-W1844	7296804B3 7296707B3	Rear: 340/85R38 (13.6R38) R1W . . . . . Front: 280/85R28 (11.2R28) R1W		(1,729.00)
75-W1840	7296805B3 7296708B3	Rear: 420/85R34 (16.9R34) R1W . . . . . Front: 340/85R24 (13.6R24) R1W		(903.00)
75-W1886	7296817B3 7296719B3	Rear: 420/85R38 (16.9R38) R1W . . . . . Front: 340/85R28 (13.6R28) R1W		(128.00)
REAR WHEEL WEIGHTS				
325-RD000	Base	Without Rear Wheel Weights		**In Base**
325-RD093	7296154	2 Sets of 3 Wheel Weights 661 Lbs (300 Kg) . . . . . **(Extended Factory Lead Time Approximately 120 Days)**	661	981.00

(F.O.B. PORT OF ENTRY)

Order Code	Catalog Number	Description	Approx. Weight (lb.)	List Price
PIVOTING FRONT FENDERS				
155-WE000	Base	Without Pivoting Front Fenders		**In Base**
155-WE110	7296027	Pivoting Front Fenders - Standard Width . . . . . (4WD Cab Models Only) **(Extended Factory Lead Time Approximately 120 Days)**		650.00
BUCKET OPTIONS - Recommended with Loader Packages Only				
	Euro Style			
	72556223ML	83-inch Material Bucket 210S, 19 cu ft (0.70 cu yds). .	496	1,089.00
	72556038ML	83-inch Material Bucket 210H, 24 cu ft (0.89 cu yds) .	556	1,372.00
MISCELLANEOUS				
275-TC025	Base	English Language Operator's Manual		**In Base**
275-TC005	7296086	French Language Operator's Manual		No Charge
275-TC011	7296087	Spanish Language Operator's Manual		No Charge

MASSEY FERGUSON®

MF5700SL SERIES

MASSEY FERGUSON®

5700SL Classic

(F.O.B. PORT OF ENTRY)

CLASSIC EDITION FEATURES

ENGINE
MF5711SL: 110 Max Engine HP
MF5712SL: 120 Max Engine HP
MF5713SL: 130 Max Engine HP
AGCO POWER™ 4.4L (268 cu. in.) 4 Cylinder
- Air-to-Air Aftercooled, Common Rail Injection, Turbocharged
- Selective Catalytic Reduction (SCR) Technology
- Tier 4 Final EPA and CARB Certified

Electronic Engine Management (EEM) with Dual ERPM Settings
Electronic Controlled Viscous Fan Drive
Dual Element Dry Type Air Cleaner
Vertical Exhaust at Right Front Cab Post
Cooling System: Antifreeze to Minus 40C
Fuel Tank Capacity: 47.5 Gal (180 L)
DEF Tank Capacity: 6.6 Gal (25 L)

POWERTRAIN
Dyna-4 Transmission 25 MPH (40 KPH)
- 16F/16R Semi-Powershift, 4 Ranges with 4 Powershifts Per Range
- Transmission Control T-Handle on Right Hand Console

Multi-Disc Wet Brakes
Power Differential Lock
Independent PTO:
- 540/540E with 6 Spline Shaft

Rear Fender Mounted PTO Shut-Off
Flange Axles

FRONT WHEEL ASSIST AXLE
4 WD Power Front Axle (PFA)
- 8 Bolt Pattern

Shielded Center Drive Line with Electro-Hydraulic Control and Front Wheel Drive Differential Lock

HYDRAULICS
Open Center Load Sensing 15 GPM (57 L/min) Pump
2900 PSI (200 Bar) Maximum Pressure
Two Mechanical Valves – Lever Controlled on Right Hand Console
Hydrostatic Power Steering

HITCH
3-Point Hitch: Category 2/3 Telescopic Ball End Links
- Active Transport Control
- Lower Link Sensing
- Electronic Draft Control, Electronic Height Control, and Rate of Drop
- Variable Float Telescopic Stabilizers
- Left and Right Side External 3-Point Control

Drawbar: Category 2, Clevis and Drop Pin

ELECTRICAL SYSTEM
120 Amp Alternator
12 V Battery, 600 CCA (SAE)
7 Pin ASAE Rear Trailer Electrical Outlet
Electrical Isolator Switch and Jumpstart Point
110 V Engine Block Heater
Ignition with Neutral Start and Key Shutoff

LIGHTING
Four Front Hood Mounted Lights
Two Front Single Bulb Worklights
Two Rear Single Bulb Worklights
Taillights, Flashing Warning Lights and Turn Signals

INSTRUMENTS
Setup and Information Screen (SIS)
Tachometer: Digital and Analog
PTO Speed: Digital
Ground Speed Display: Digital
Fuel Level and Coolant Temp Gauges
Warning/Information Lights

OPERATOR AREA
6 Post Cab
Adjustable Steering Column
Front Sun Visor
Air Conditioning and Heater
Mechanical Swivel Seat with Armrest and Seatbelt
Instructor Seat Sold Separately
Front Windshield Wiper/Washer
External Side Mirrors (Non-Telescopic)
Two Audio Speakers and Antenna
One Electrical Socket in Cab
Speed Chart

WHEELS AND TIRES
Rear: 460/85R34 R1W 8 Lug Pressed Wheels
Front: 380/85R24 R1W Waffle Wheel

OTHER STANDARD FEATURES
Hi VIS Front Hood, Single Piece Raising with Lockable Front Latch
Lockable Tool Box
SMV Sign
Molded Rear Fenders
English Op Manual

NOT FOR SALE IN STATE OF NEBRASKA

5700SL Classic

MASSEY FERGUSON®

(F.O.B. PORT OF ENTRY)

Order Code	Catalog Number	Description	Approx. Weight (lb.)	List Price

ONE ORDER CODE FROM EACH GROUP MUST BE SPECIFIED. (Unless n Base Option is desired)

BASE MACHINE

MF5711SL~ES	7292224	Massey 5711SL Classic Tractor 80 PTO HP	93,654.00
MF5712SL~ES	7292225	Massey 5712SL Classic Tractor 90 PTO HP	98,111.00
MF5713SL~ES	7292226	Massey 5713SL Classic Tractor 100 PTO HP	102,570.00

TRANSMISSION OPTIONS

	Base	Dyna-4 Transmission with 16F/16R gears 25 MPH . . . (40 KPH) with Speed Matching	In Base
25-EA637	7292175	Dyna-4 Transmission with 16F/16R gears 25 MPH . . . (40 KPH) with AUTO-DRIVE	296.00
35-EN002	7292064	Creeper Gear (14:1 Reduction)	2,664.00

INSTRUMENT PANEL / CONTROL CENTER DISPLAY

	Base	Analog and Digital Instrument Panel	In Base
175-BA003	7293084	Analog and Digital Instrument Panel with Radar . . . . (For Actual Ground Speed) and Slip Control.	882.00

FUSE TECHNOLOGIES™ - TELEMETRY

160-BS003	7292233	AGCOMMAND™ Telemetry Module . . . . . (Antenna, Bracket and Harness) Includes: AGCOMMAND™ Standard Plus 1 Year Subscription	2,467.00

(F.O.B. PORT OF ENTRY)

Order Code	Catalog Number	Description	Approx. Weight (lb.)	List Price
PTO				
	Base	540/540E RPM 6 Spline with Economy PTO		In Base
		Delayed Production please contact Marketing.		
100-LA066	7292159	540/540E/1000 RPM PTO with Economy PTO		531.00
		540 RPM 6 Spline and 1000 RPM 21 Spline		
FRONT HITCH				
	Base	Less Front Hitch.		In Base
230-F1119	7292199	3,968 lbs (1800 kg) Front Hitch with Couplers		5,700.00
		Not Compatible with 2 wd Front Axle		
230-F1149	7292234	3,968 lbs (1800 kg) Front Hitch with Couplers		14,054.00
		and Front PTO (21 Spline)		
		Not Compatible with 2 wd Front Axle		
REAR 3-POINT HITCH				
	Base	Category 2/3 Hitch with Telescopic Ball End Links . . .		In Base
95-GC022	7293572	Category 3 Hitch with Hook End Links		No Charge
		and Cat 2/3 Balls and Cones		
HITCH WEIGHTS				
	Base	Less Three Point Hitch Mounted Weight		In Base
345-YB003	7294119	1873 lbs. (850 kg.) 3-Point Hitch Weight	1984	3,440.00
		For use with Front Hitch or GC022 Rear 3-Point Hitch		
LOADER PROVISION				
	Base	Less Loader Provisions		In Base
350-LL001	7293445	Front Loader Provision - Mech Joystick Loader Control,		6,403.00
		Including Hydraulics and Subframe		
		Requires - 1st/2nd Mechanical Control Valves		
		26 GPM (98 L/min) Twin Flow Open Center System (DP100) or		
		29 GPM (110 L/min) Closed Center Load Sensing(DP110)		
350-S3002	7293680	Front Loader Provisions including		10,950.00
		Hydraulic and Subframe also includes:		
		DP100 - 26 GPM (98 L/min) Twin Flow Open Center System		
		KX012 - Valves 1 and 2 Electric, with Multi-Function Joystick on the Armrest		
		MU014 - 3rd and 4th Mechanical Valve Located on right hand console		
		Requires AE026 or AE027 Air Suspended Seat		

(F.O.B. PORT OF ENTRY)

Order Code	Catalog Number	Description	Approx. Weight (lb.)	List Price

❖ AUXILIARY HYDRAULIC FLOW

370-DP057	Base	15 GPM (57 L/min) Open Center System	In Base
370-DP100	7292178	26 GPM (98 L/min) Twin Flow Open Center System . .	1,100.00
370-DP110	7292195	29 GPM (110 L/min) Closed Center Load Sensing . . . (Not compatible with 2 wd Front Axle)	4,743.00

VALID COMBINATIONS		
DP057	**DP100**	**DP110**
KX004 + MU000	KX004 + MU000	KX010 + MU000
KX006 + MU002	KX005 + MU000	KX010 + MU003
KX006 + MU011	KX006 + MU002	KX010 + MU012
	KX006 + MU011	

❖ AUXILIARY VALVE 1 & 2

50-KX004	Base	2 Mechanical Controlled Valves, ... Located on right hand console (1st - Single Acting/Double Acting, Flow Dividing and 2nd- Single Acting/Double Acting, Zero Leak, Notch Float)	In Base
50-KX005	7292192	2 Mechanical Controlled Valves, ... Located on right hand console (1st - Single Acting/Double Acting, Flow Dividing, Kickout and 2nd - Double Acting, Kickout, Float)	No Charge
50-KX006	7292193	2 Mechanical Controlled Valves, ... Located on right hand console (1st - Double Acting, Flow Dividing, Kickout, Zero Leak and 2nd - Single Acting/Double Acting, Zero Leak, Notch Float)	No Charge
50-KX010	7292300	2 Mechanical Controlled Valves, ... Located on right hand console. (1st and 2nd - Flow Dividing, Kickout, Zero Leak, Float)	No Charge

❖ AUXILIARY VALVE 3 & 4

55-MU000	Base	Less Additional Valve	In Base
55-MU002	7292194	3rd Mechanical Valve Only, ... Located on right hand console (Single Acting/Double Acting)	1,074.00
55-MU011	7292230	3rd and 4th Mechanical Valve Only,. . . . . Located on right hand console (1st - Single Acting/Double Acting 2nd - Double Acting, Kickout, Float)	2,298.00
55-MU003	7292302	3rd Valve only, Mechanically Controlled. . . . . with lever located in Right Hand Console Kickout, Zero Leak, Flow Dividing, Float	1,224.00
55-MU012	7292231	3rd and 4th Mechanical Valve Only,. . . . . Located on right hand console (1st and 2nd - Flow Dividing, Kickout, Zero Leak, Float)	2,448.00

❖ Please note that Loader Provisions S3002 includes key hydraulic components and may require this option group to be left blank

(F.O.B. PORT OF ENTRY)

Order Code	Catalog Number	Description	Approx. Weight (lb.)	List Price
SEAT OPTIONS				
	Base	Mechanical Swiveling Seat with Armrests		In Base
125-AE026	7292027	Air Suspended Seat - Manual Adjustment		921.00
125-AE027	7292189	Air Suspended Seat - Automatic Adjustment		1,168.00
130-AG003	7292235	Instructor's Seat with Seat Belt (not in Classic Base)		525.00
CAB OPTIONS				
140-AI020	7293077	Standard Cab Roof with Roof Hatch		273.00
140-E1022	7293078	Visio Roof, includes 2 Front Double Bulb and 2 Rear Double Bulb Worklights		1,586.00
115-AM084	7293559	Mechanical Cab Suspension		1,705.00
135-AK001	7292029	Rear Wiper / Washer		453.00
150-AN001	7292237	Internal Mirror		43.00
145-AL008	7292236	Telescopic Large Side Mirrors		333.00
RADIO				
365-AF009	7294248	Radio (MP3 Compatible)		670.00
365-AF011	7294227	Radio (CD Player, MP3 Compatible)		851.00
ELECTRICAL				
220-CE020	7292190	175 Amp Alternator in lieu of in base 120 Amp Alternator		228.00
215-CB000	7293593	Less Engine Block Heater		(204.00)
LIGHTING				
205-VF013	7293103	Dual Roof-Mounted Rotating Beacons, Left and Right Includes SAE SMV sign		522.00
195-VG079	7292238	4 Front Double Bulb and 4 Rear Double Bulb Worklights (Not Compatible with E1022 Visio Roof)		404.00
190-VK004	7293597	Worklights on Handrails and Rear Fenders		543.00
BRAKES				
250-GS001	7293100	Hydraulic Trailer Brakes		817.00
250-GS062	7293551	Pneumatic Trailer Brakes Not Compatible with 2wd Front Axle (NA004)		6,767.00
MISCELLANEOUS				
225-LQ001	7293553	Ecology Drain and Engine Water Separator		466.00
275-TC005	7294210	French Language OIB		No Charge
275-TC011	7294211	Spanish Language OIB		No Charge

(F.O.B. PORT OF ENTRY)

Order Code	Catalog Number	Description	Approx. Weight (lb.)	List Price
FRONT AXLE				
	Base	4 wd Power Front Axle		In Base
65-NA004	7292177	2 wd Front Axle		(8,037.00)
65-NA032	7293408	Suspended Front Axle.		7,176.00
TIRE BRAND SELECTION				
70-Blank	7294212	Factory Brand Choice		No Charge
70-T0001	7294195	Michelin (MI) Brand Required		1,615.00
70-T0007	7294197	Firestone (FI) Brand Required		1,205.00
70-T0010	7294198	Trelleborg (TR) Brand Required.		1,205.00
70-T0014	7294250	Nokian Brand Request (4 wd only)		1,205.00
FRONT AND REAR TIRES				
		2WD - 8 Lug Steel - Set of 2		
75-W1693	7292861B2 7293778B2	Rear: 18.4R30 R1W (MI) Front: 10.00-16 R1W F2 (FI)		(1,796.00)
75-W1046	7292877B2 7293778B2	Rear: 16.9R34 R1W (MI, FI, TR) Front: 10.00-16 R1W F2 (FI)		(2,152.00)
75-W1697	7292880B2 7293778B2	Rear: 14.9R38 R1W (MI, FI) Front: 10.00-16 R1W F2 (FI)		(2,080.00)
75-W1124	7292862B2 7293778B2	Rear: 18.4R34 R1W (MI, FI, TR) Front: 10.00-16 R1W F2 (FI)		(1,638.00)
75-W1177	7292863B2 7293778B2	Rear: 16.9R38 R1W (MI, FI, TR) Front: 10.00-16 R1W F2 (FI)		(1,590.00)
		4WD - 8 Lug Steel - Set of 2		
75-Base	7292862B2 7293774B2	Rear: 18.4R34 R1W (MI, FI, TR) Front: 14.9R24 R1W (MI, FI, TR)		In Base
75-W1662	7292861B2 7293760B2	Rear: 18.4R30 R1W (MI) Front: 13.6R24 R1W (MI, FI, TR)		(521.00)
75-W1694	7292877B2 7293760B2	Rear: 16.9R34 R1W (MI, FI, TR) Front: 13.6R24 R1W (MI, FI)		(877.00)
75-W1695	7292878B2 7293773B2	Rear: 480/70R34 R1W (MI, TR) Front: 380/70R24 R1W (MI, FI)		407.00
75-W1664	7292863B2 7293761B2	Rear: 16.9R38 R1W (MI, FI, TR) Front: 13.6R28 R1W (MI, FI, TR)		(124.00)
75-W1700	7292881B2 7293780B2	Rear: 480/70R38 R1W (MI, FI, TR) Front: 380/70R28 R1W (MI, FI, TR)		1,301.00
75-W1297	7292864B2 7294786B2	Rear: 460/85R38 R1W (MI, FI, TR) Front: 380/85R28 R1W (MI, FI, TR)		1,584.00

(F.O.B. PORT OF ENTRY)

Order Code	Catalog Number	Description	Approx. Weight (lb.)	List Price
FRONT AND REAR TIRES - Continued				
		Welded Steel Standard Offset with Spacers - Set of 2		
75-W1286	7292858B2 7293757B2	Rear: 540/65R38 R1W (MI, FI, TR) . . . . . . Front: 440/65R28 R1W (MI, FI, TR)		2,290.00
75-W1371	7292889B2 7292756B2	Rear: 600/60R38 R1W (MI) . . . . . . Front: 480/60R28 R1W (MI)		1,032.00
75-W1257	7292859B2 7294785B2	Rear: 600/65R38 R1W (MI, FI, TR) . . . . . . Front: 480/65R28 R1W (MI, FI, TR)		3,006.00
75-W1487	7292894B2 7293780B2	Rear: 480/70R38 R1W (MI, FI, TR) . . . . . . Front: 380/70R28 R1W (MI, FI, TR)		1,598.00
75-W1299	7292897B2 7294786B2	Rear: 460/85R38 R1W (MI, FI, TR) . . . . . . Front: 380/85R28 R1W (MI, FI, TR)		911.00
75-W1606	7292895B2 7293776B2	Rear: 520/70R38 R1W (MI, FI, TR) . . . . . . Front: 420/70R28 R1W (MI, FI, TR)		2,520.00
75-W1476	7292871B2 7293767B2	Rear: 480/80R34 R1W (Nokian Industrial) . . . . . . Front: 400/80R24 R1W (Nokian Industrial)		7,627.00
75-W1511	7292872B2 7292890B2	Rear: 480/80R38 Industrial (Nokian Industrial) . . . . . Front: 400/80R28 Industrial (Nokian Industrial)		9,772.00
REAR WHEEL WEIGHTS				
325-RD002	7293328	2 Sets of 110 LBS (50 KG) weights (4 weights total) . . Mounts Externally to Wheel Only Available on Welded Rims (Non Adjustable)	1102	600.00
325-RD004	7293330	1 Set of 110 LBS (50 KG) and1 Set of . . . . . . 440 LBS (200 KG) (4 weights total) Mounts Externally to Wheel Only Available on Welded Rims (Non Adjustable)	1100	900.00
DEALER INSTALLED FRONT WEIGHTS				
	5020186M	8 x 55 KG (121 lbs.) Front Weights	968	1,545.00
	5020187M	10 x 55 KG (121 lbs.) Front Weights	1210	1,932.00

(F.O.B. PORT OF ENTRY)

Order Code	Catalog Number	Description	Approx. Weight (lb.)	List Price
PIVOTING FRONT FENDERS				
	Base	Less Pivoting Front Fenders		In Base
155-WE110	7294204	Pivoting Front Fenders - Standard Width . . . . . Width depends on tire selection; see Chart Below Requires 4WD Front Axle		1,699.00
155-WE111	7294205	Pivoting Front Fenders - Wide Width . . . . . Width depends on tire selection; see Chart Below Requires 4WD Front Axle		2,004.00

Pivoting Front Fender Size		
Standard	**Wide**	**Tire Sizes**
320 mm	355 mm	320/70R24 320/85R24 (12.4R24)
355 mm	380 mm	340/85R24 (13.6R24) 340/85R28 (13.6R28)
380 mm	410 mm	380/70R24 380/70R28 380/85R24 (14.9R24) 380/85R28 (14.9R28) 400/80R24 400/80R28
410 mm	470 mm	420/70R24 420/70R28 440/65R24 440/65R28
470 mm	520 mm	480/65R24 480/65R28
520 mm	620 mm	VF480/60R28 VF520/60R28

REAR FENDERS			
Base		Standard Width Fenders (78 inch) LESS Rear Extensions	In Base
255-WD013	7293450	Standard Width Fenders (78 inch) w/ Rear Extensions.	1,323.00
255-WD017	7293107	Wide Fender (90.5 inches) with Rear Extensions	1,323.00

RESERVED PAGE

5700SL Deluxe

MASSEY FERGUSON®

(F.O.B. PORT OF ENTRY)

DELUXE EDITION FEATURES

ENGINE
MF5711SL: 110 Max Engine HP
MF5712SL: 120 Max Engine HP
MF5713SL: 130 Max Engine HP
AGCO POWER™ 4.4L (268 cu. in.) 4 Cylinder
- Air-to-Air Aftercooled, Common Rail Injection, Turbocharged
- Selective Catalytic Reduction (SCR) Technology
- Tier 4 Final EPA and CARB Certified

Electronic Engine Management (EEM) with Dual ERPM Settings
Electronic Controlled Viscous Fan Drive
Dual Element Dry Type Air Cleaner
Vertical Exhaust at Right Front Cab Post
Cooling System: Antifreeze to Minus 40C
Fuel Tank Capacity: 47.5 Gal (180 L)
DEF Tank Capacity: 6.6 Gal (25 L)

POWERTRAIN
Dyna-4 Transmission 25 MPH (40 KPH)
- 16F/16R Semi-Powershift, 4 Ranges with 4 Powershifts Per Range with AUTODRIVE
- Transmission Control T-Handle on Right Hand Armrest

Multi-Disc Wet Brakes
Power Differential Lock
Independent PTO:
- 540/540E/1000 with 6 and 21 Spline Shaft

Rear Fender Mounted PTO Shut-Off
Flange Axles

FRONT WHEEL ASSIST AXLE
4 WD Power Front Axle (PFA)
- 8 Bolt Pattern

Shielded Center Drive Line with Electro-Hydraulic Control and Front Wheel Drive Differential Lock

HYDRAULICS
Twin Flow Open Center System 26 GPM (98 L/min) Pump
2900 PSI (200 Bar) Maximum Pressure
Valves 1st & 2nd Electric, with Multi-Function Joystick on the Armrest
Valves 3rd & 4th Mechanical, with levers located in Right Hand Console
Hydrostatic Power Steering

HITCH
3-Point Hitch: Category 2/3 Telescopic Ball End Links
- Active Transport Control
- Lower Link Sensing
- Electronic Draft Control, Electronic Height Control, and Rate of Drop
- Variable Float Telescopic Stabilizers
- Left and Right Side External 3-Point Control

Drawbar: Category 2, Clevis and Drop Pin

ELECTRICAL SYSTEM
175 Amp Alternator
12 V Battery, 600 CCA (SAE)
7 Pin ASAE Rear Trailer Electrical Outlet
Electrical Isolator Switch and Jumpstart Point
110 V Engine Block Heater
Ignition with Neutral Start and Key Shutoff

LIGHTING
Four Front Hood Mounted Lights
Four Front Single Bulb Worklights
Four Rear Single Bulb Worklights
Worklights on Handrails and Rear Fenders
Taillights, Flashing Warning Lights and Turn Signals

INSTRUMENTS
Setup and Information Screen (SIS)
Control Center Display (CCD) with Video Input, Electric Valve Control, Radar with Slip Control and ISOBUS
Tachometer: Digital and Analog
PTO Speed: Digital
Ground Speed Display: Digital
Fuel Level and Coolant Temp Gauges
Warning/Information Lights

OPERATOR AREA
Mechanical Cab Suspension
6 Post Cab
Adjustable Steering Column
Front Sun Visor
Air Conditioning and Heater
Automatic Air Suspended Swivel Seat with Armrest and Seatbelt
Instructor Seat
Front and Rear Windshield Wiper/Washer
Dual Large Telescoping Outside Rear View Mirrors with Electric De-icing and Adjustment
Single Inside Rear View Mirror
Radio (MP3 compatible) with Two Audio Speakers and Antenna
Two Electrical Sockets in Cab
Speed Chart

WHEELS AND TIRES
Rear: 460/85R34 R1W 8 Lug Pressed Wheels
Front: 380/85R24 R1W Waffle Wheel

OTHER STANDARD FEATURES
Pivoting Front Fenders, Standard Width
AGCOMMAND™ Ready with Antenna, Bracket, and Harness
(No Module or Subscription)
(To Complete, See Technology Section)
Hi VIS Front Hood, Single Piece Raising with Lockable Front Latch
Lockable Tool Box
SMV Sign
Molded Rear Fenders
English Op Manual

NOT FOR SALE IN STATE OF NEBRASKA

5700SL Deluxe

(F.O.B. PORT OF ENTRY)

Order Code	Catalog Number	Description	Approx. Weight (lb.)	List Price
		ONE ORDER CODE FROM EACH GROUP MUST BE SPECIFIED. (Unless n Base Option is desired)		
BASE MACHINE				
MF5711SL~EF	7292227	Massey 5711SL Deluxe Tractor 80 PTO HP		108,416.00
MF5712SL~EF	7292228	Massey 5712SL Deluxe Tractor 90 PTO HP		112,874.00
MF5713SL~EF	7292229	Massey 5713SL Deluxe Tractor 100 PTO HP.		117,332.00
TRANSMISSION OPTION				
	Base	Dyna-4 Transmission with 16F/16R gears 25 MPH . . . (40 KPH) with AUTO-DRIVE		In Base
35-EN002	7292064	Creeper Gear (14:1 Reduction)		2,664.00
INSTRUMENT PANEL / CONTROL CENTER DISPLAY - LESS AUTO-STEERING READY				
175-BA008	Base	Analog and Digital Instrument Panel, Control Center . . Display (CCD) with Video Input, Electric Valve Control, Radar with Slip Control and ISOBUS Requires 175 AMP Alternator (In Base)		In Base
175-BA003	7292183	Analog and Digital Instrument Panel with Radar . . . . and Slip Control Without Control Center Display (CCD)		(5,024.00)
175-BA005	7292184	Analog and Digital Instrument Panel . . . . . Without Radar or Slip Control Without Control Center Display (CCD)		(5,840.00)
FUSE TECHNOLOGIES™ - AUTO-STEERING				
Requires 175 AMP Alternator (In Base) Requires 29 GPM Closed Center Load Sensing (DP110) Requires SpeedSteer (AD004)				
175-BA012	7292239	**Auto-Steer Ready**, Analog & Digital Instrument Panel . Control Center Display (CCD) with Video Input, Electric Valve Control, Radar with Slip Control and ISOBUS. (Includes Roof Plate and Wiring Harness) Order Auto-Guide™ 3000 TopDock Separately See Technology Section		146.00
175-BA021	7292240	**Auto-Steer Complete**, Analog & Digital Instrument Panel Control Center Display (CCD) with Video Input, Electric Valve Control, Radar with Slip Control and ISOBUS. Auto-Guide™ 3000 Sub-Meter (WAAS and OmniStar VBS) Auto Steering System. (Includes Roof Plate and Wiring Harness) Auto-Guide™ 3000 uses the Control Center Display (CCD)		6,242.00
FUSE TECHNOLOGIES™ - TELEMETRY				
160-BS003	7292233	AGCOMMAND™ Telemetry Module . . . . . (Antenna, Bracket and Harness) Includes: AGCOMMAND™ Advanced (1 Year Subscription)		2,467.00
SPEEDSTEER				
185-AD004	7292232	SpeedSteer . . . . . Requires (DP110) 29 GPM Closed Center Load Sensing Not Compatible with BA003 or BA005 Instrument Panels		1,508.00

(F.O.B. PORT OF ENTRY)

Order Code	Catalog Number	Description	Approx. Weight (lb.)	List Price
PTO				
	Base	540/540E/1000 RPM PTO with Economy PTO . . . . . 540 RPM 6 Spline and 1000 RPM 21 Spline		In Base
100-LA062	7292182	540/540E RPM 6 Spline with Economy PTO		(483.00)
FRONT HITCH				
	Base	Less Front Hitch		In Base
230-F1119	7292199	3,968 lbs (1800 kg) Front Hitch with Couplers		5,700.00
230-F1149	7292234	3,968 lbs (1800 kg) Front Hitch with Couplers . . . . . and Front PTO (21 Spline)		14,054.00
REAR 3-POINT HITCH				
	Base	Category 2/3 Hitch with Telescopic Ball End Links . . .		In Base
95-GC022	7293572	Category 3 Hitch with Hook End Links . . . . . and Cat 2/3 Balls and Cones		No Charge
HITCH WEIGHTS				
	Base	Less Three Point Hitch Mounted Weight		In Base
345-YB003	7294119	1873 lbs. (850 kg.) 3-Point Hitch Weight . . . . . For use with Front Hitch or GC022 Rear 3-Point Hitch	1984	3,440.00
LOADER PROVISION				
	Base	Less Loader Provisions		In Base
350-S3002	7293681	Front Loader Provisions including . . . . . Hydraulic and Subframe, also includes: DP100 - 26 GPM Twin Flow Open Center System KX012 - 2 Electric Valves with Multi-Function Joystick MU014 - 3rd and 4th Mechanical Valves		6,403.00
350-S3003	7293682	Front Loader Provisions including . . . . . Hydraulic and Subframe, also includes: DP110 - 29 GPM Closed Center Load Sensing KX012 - 2 Electric Valves with Multi-Function MU014 - 3rd and 4th Mechanical Valves Requires AE026 or AE027 Air Suspended Seat		10,118.00

Order Code	Catalog Number	Description	Approx. Weight (lb.)	List Price
❖ AUXILIARY HYDRAULIC FLOW				
370-DP100	Base	26 GPM (98L/min) Twin Flow Open Center System . . Requires Less Power Beyond		In Base
370-DP110	7292196	29 GPM (110 L/min) Closed Center Load Sensing . . .		3,715.00

VALID COMBINATIONS	
DP100	**DP110**
KX012 + MU014	KX012 + MU012
	KX011 + MU012

❖ AUXILIARY VALVE 1 & 2				
50-KX012	Base	2 Electrically Controlled Valves with. . . . . Multi-Function Joystick on the Armrest		In Base
50-KX011	7292301	2 Electrically Controlled Valves with Fingertip Controlled Spool Valves, Fingertips Located in Armrest		No Charge
❖ AUXILIARY VALVE 3 & 4				
55-MU014	Base	3rd and 4th Mechanically Controlled Valves with . . . . Levers Located in Right Hand Console (1st - Single Acting/Double Acting, Flow Dividing, Kickout and 2nd - Double Acting, Kickout, Float)		In Base
55-MU012	7292303	3rd and 4th Mechanically Controlled Valves with . . . . Levers located in Right Hand Console (1st and 2nd - Flow Dividing, Kickout, Zero Leak, Float)		150.00

❖ Please note that Loader Provisions S3002 and S3003 include key hydraulic components and may require this option group to be left blank

POWER BEYOND				
	Base	Less Power Beyond		In Base
90-GR010	7292197	Power Beyond Couplers P/T/LS. . . . . Requires (DP110) 29 GPM Closed Center Load Sensing		744.00

(F.O.B. PORT OF ENTRY)

Order Code	Catalog Number	Description	Approx. Weight (lb.)	List Price
SEAT OPTIONS				
	Base	Air Suspended Seat - Automatic Adjustment		In Base
125-AE042	7293546	Superluxe Grammar Seat		1,792.00
CAB OPTIONS				
140-AI020	7293077	Standard Cab Roof with Roof Hatch		273.00
140-E1022	7293078	Visio Roof, includes 2 Front Double Bulb and 2 Rear Double Bulb Worklights Requires AL008 Telescopic Large Side Mirrors		1,586.00
115-AM015	7292187	Less Cab Suspension		(1,655.00)
120-AQ004	7293082	Automatic Climate Control Not Compatible with E1022 Visio Roof		1,245.00
145-AL008	7293692	Telescopic Large Side Mirrors		(458.00)
RADIO				
	Base	Radio (MP3 Compatible)		In Base
365-AF011	7292185	Radio (CD Player, MP3 Compatible)		182.00
ELECTRICAL				
220-CE015	7292191	120 Amp Alternator (in lieu of in base 175 Amp) Requires (BA003 or BA005)		(228.00)
215-CB000	7293593	Less Engine Block Heater		(204.00)
LIGHTING				
205-VF013	7293103	Dual Roof-Mounted Rotating Beacons, Left and Right Includes SAE SMV sign		522.00
BRAKES				
250-GS001	7293100	Hydraulic Trailer Brakes		817.00
250-GS062	7293551	Pneumatic Trailer Brakes Not Compatible with 2wd Front Axle		6,767.00
MISCELLANEOUS				
225-LQ001	7293553	Ecology Drain and Engine Water Separator.		466.00
275-TC005	7294210	French Language OIB.		No Charge
275-TC011	7294211	Spanish Language OIB		No Charge

(F.O.B. PORT OF ENTRY)

Order Code	Catalog Number	Description	Approx. Weight (lb.)	List Price
FRONT AXLE				
	Base	4wd Power Front Axle		In Base
65-NA032	7293408	Suspended Front Axle		7,176.00
TIRE BRAND SELECTION				
70-Blank	7294212	Factory Brand Choice		No Charge
70-T0001	7294195	Michelin (MI) Brand Required		1,615.00
70-T0007	7294197	Firestone (FI) Brand Required		1,205.00
70-T0010	7294198	Trelleborg (TR) Brand Required		1,205.00
70-T0014	7294250	Nokian Brand Request		1,205.00
FRONT AND REAR TIRES				
		4WD - 8 Lug Steel - Set of 2		
75-Base	7292862B2 7293774B2	Rear: 18.4R34 R1W (MI, FI, TR) Front: 14.9R24 R1W (MI, FI, TR)		In Base
75-W1662	7292861B2 7293760B2	Rear: 18.4R30 R1W (MI) Front: 13.6R24 R1W (MI, FI, TR)		(521.00)
75-W1694	7292877B2 7293760B2	Rear: 16.9R34 R1W (MI, FI, TR) Front: 13.6R24 R1W (MI, FI)		(877.00)
75-W1695	7292878B2 7293773B2	Rear: 480/70R34 R1W (MI, TR) Front: 380/70R24 R1W (MI, FI)		407.00
75-W1664	7292863B2 7293761B2	Rear: 16.9R38 R1W (MI, FI, TR) Front: 13.6R28 R1W (MI, FI, TR)		(124.00)
75-W1700	7292881B2 7293780B2	Rear: 480/70R38 R1W (MI, FI, TR) Front: 380/70R28 R1W (MI, FI, TR)		1,301.00
75-W1297	7292864B2 7294786B2	Rear: 460/85R38 R1W (MI, FI, TR) Front: 380/85R28 R1W (MI, FI, TR)		1,584.00
		Welded Steel Standard Offset with Spacers - Set of 2		
75-W1286	7292858B2 7293757B2	Rear: 540/65R38 R1W (MI, FI, TR) Front: 440/65R28 R1W (MI, FI, TR)		2,290.00
75-W1371	7292889B2 7292756B2	Rear: 600/60R38 R1W (MI) Front: 480/60R28 R1W (MI)		1,032.00
75-W1257	7292859B2 7294785B2	Rear: 600/65R38 R1W (MI, FI, TR) Front: 480/65R28 R1W (MI, FI, TR)		3,006.00
75-W1487	7292894B2 7293780B2	Rear: 480/70R38 R1W (MI, FI, TR) Front: 380/70R28 R1W (MI, FI, TR)		1,598.00
75-W1299	7292897B2 7294786B2	Rear: 460/85R38 R1W (MI, FI, TR) Front: 380/85R28 R1W (MI, FI, TR)		911.00
75-W1606	7292895B2 7293776B2	Rear: 520/70R38 R1W (MI, FI, TR) Front: 420/70R28 R1W (MI, FI, TR)		2,520.00
75-W1476	7292871B2 7293767B2	Rear: 480/80R34 R1W (Nokian Industrial) Front: 400/80R24 R1W (Nokian Industrial)		7,627.00
75-W1511	7292872B2 7292890B2	Rear: 480/80R38 Industrial (Nokian Industrial) Front: 400/80R28 Industrial (Nokian Industrial)		9,772.00

(F.O.B. PORT OF ENTRY)

Order Code	Catalog Number	Description	Approx. Weight (lb.)	List Price
REAR WHEEL WEIGHTS				
325-RD002	7293328	2 Sets of 110 LBS (50 KG) weights (4 weights total) . . Mounts Externally to Wheel Only Available on Welded Rims (Non Adjustable)	1102	600.00
325-RD004	7293330	1 Set of 110 LBS (50 KG) and1 Set of . . . . . 440 LBS (200 KG) (4 weights total) Mounts Externally to Wheel Only Available on Welded Rims (Non Adjustable)	1100	900.00
DEALER INSTALLED FRONT WEIGHTS				
	5020186M	8 x 55 KG (121 lbs.) Front Weights	968	1,545.00
	5020187M	10 x 55 KG (121 lbs.) Front Weights	1210	1,932.00
PIVOTING FRONT FENDERS				
	Base	Pivoting Front Fenders - Standard Width . . . . . Width depends on tire selection; see Chart Below		In Base
155-WE111	7293598	Pivoting Front Fenders - Wide Width . . . . . Width depends on tire selection; see Chart Below		120.00

Pivoting Front Fender Size		
Standard	**Wide**	**Tire Sizes**
320 mm	355 mm	320/70R24 320/85R24 (12.4R24)
355 mm	380 mm	340/85R24 (13.6R24) 340/85R28 (13.6R28)
380 mm	410 mm	380/70R24 380/70R28 380/85R24 (14.9R24) 380/85R28 (14.9R28) 400/80R24 400/80R28
410 mm	470 mm	420/70R24 420/70R28 440/65R24 440/65R28
470 mm	520 mm	480/65R24 480/65R28
520 mm	620 mm	VF480/60R28 VF520/60R28

REAR FENDERS			
Base	7293450	Rear Fenders without Extensions, 78.74"(2.00 M) . . .	In Base
255-WD013	7293450	Rear Fenders with Extensions, 78.74"(2.00 M)	1,323.00
255-WD017	7293107	Wide Fender -90.55" (2.3 M) with Rear Extension . . .	1,323.00

RESERVED PAGE

MASSEY FERGUSON®

MF 6700
GLOBAL SERIES

MASSEY FERGUSON®

MF 6700 PLATFORM

(F.O.B. PORT OF ENTRY)

DELUXE TRACTOR FEATURES

ENGINE SYSTEM
- 4.4L 4-Cylinder AGCO Power
- EPA Tier 4 Final and CARB Certified
- Air Cleaner: Dual Element Dry Type
- Air Cleaner Intake, Under Hood
- Vertical Exhaust
- Cooling System: Antifreeze 50/50 Mix
- Cold Starting Aid: Intake Heater

HORSEPOWER
(Max Engine @ 2000 RPM; Rated Engine & PTO @ 2200 RPM)

MF6712 Deluxe Powershuttle:
120 Max Engine HP, 115 Engine HP, 99 PTO HP

MF6713 Deluxe Powershuttle:
130 Max Engine HP, 125 Engine HP, 109 PTO HP

FRONT AXLE
- 4wd: Center Driveline, Open Differential, Standard Hydraulically Actuated Differential Lock

POWERTRAIN
- Transmission: 24.8 mph (40 kph)
  12 X 12 Power Shuttle with Electro-Hydraulic Shuttle Lever, 6 Synchronized Gears, 2 Ranges
- Rear Axle: Inboard Planetary Final Drives, with Push Button Operated Mechanical Differential Lock, Flanged Rear Axle
- Brakes: Independent Oil Immersed Wet Disc Brakes with Independent Foot Pedal Operation
- Hook and Lever Parking Brake
- PTO: Independent 540/540E/1000 RPM Speeds, 6 and 21 Spline Flanged Shafts standard (1.375 In. Diameter), Independent Wet Disc Clutch, Electro-hydraulic Engagement

HYDRAULIC SYSTEM
- Implement System:
  Open Center System, Engine Driven Gear Pump, 26 GPM (98 LPM) Flow
  Optional Cable-controlled Loader Joystick with Mid Valves
- 2 Mechanical Controlled Spool Valves (1 x DA KO FL + 1 x DA KO FL)
- Rear Linkage:
  ASAE Category III / II with Telescopic Ball Ends
  Lift Capacity at 24": 9392 lbs (4260 kg)
  2 Adjustable Rear Linkage Turnbuckles, Top Linl
  Draft Sensing
  Standard Telescopic Stabilizers
- Swing Offset Drawbar with 350/400/500mm Positions, Cat 2 Clevis

ELECTRICAL
- 12 Volt DC, Negative Ground
- Intake Air Pre Heater
- Wet, Maintenance Free SAE 775 CCA Battery
  80 AMP Alternator
- Ignition: Key with Safety Start
- Keyed Engine Shutoff
- Lighting: 4 Headlights, 2 Rear Marker Light Assemblies
- 2 Mid Mounted Worklights
- Engine RPM Memory Switch
- Rear Brake Lights
- Standard 1 Rear Work Light
- 7 Pin ASAE Outlet Socket
- 30 Amp Auxiliary Electrical Socket

INSTRUMENTS
- Digital and Analog Dash Display with Performance Monitor
- Analog Engine Tachometer
- Analog Fuel Gauge
- Analog Engine Temperature
- Digital Transmission Display
- Digital Hour Meter
- Operation and Service Lights

OPERATOR ENVIRONMENT (PLATFORM MODELS)
- Flat Floor Platform - ISO Mounted
- Rubber Floor Mat
- Hand Rails with Glass Heat Shields
- Lever Controlled 3-Point Linkage with Easy Lift/Lower Option and Draft Control
- 2 Post Folding ROPS
- Tilt Steering Column
- Seat: Mechanical Spring Suspension
- Retractable Seat Belt
- Cup Holder
- Pendant Style (Suspended) Foot Pedals
- Hand and Foot Throttle
- Left Side and Right Side Foot Step Entry
- External 3-Point Lift Control on Left Hand Side Fender

OTHER STANDARD FEATURES
- One-Piece Tilting Hood
- Side Rear Fender Extensions
- Fuel Tank Guard
- Tool Box
- SMV Sign

MF6713 NOT FOR SALE IN STATE OF NEBRASKA

MF 6700 PLATFORM

MASSEY FERGUSON®

(F.O.B. PORT OF ENTRY)

LOADER FEATURES

MF941X AND MF946X LOADERS
FITS ALL MF5700 / MF6700 GLOBAL SERIES TRACTORS

- One Piece Main Frame with Tapered Arms and Single Cross Member, Powder Painted with Corrosion Protection
- Quick Attach Loader Frame Mount with Pin Lock and Built in Parking Stands
- 5 mm High Tensile, Tapered Box Section Frame
- 70 mm Arm Profile
- 75 mm Double Acting Lift Cylinders **(MF941X)**
- 70 mm Double Acting Lift Cylinders **(MF946X)**
- 75 mm Double Acting Bucket Cylinders **(MF941X)**
- 75 mm Double Acting Bucket Cylinders, Equal Displacement **(MF946X)**
- Hydraulic Lines Routed Inside Main Frame for Protection and Visibility
- Pivots have Recessed Greasable Galvanized Steel Pins with Bushings at Key Points
- 4-Flat Face Hydraulic Tips on Boom and Bucket Circuits
- Protective Hose Cover
- Bucket Level Indicator
- **NSL:** Lift Capacity to Full Height @ 31.5 inches Forward of Pivot Pin: 2220 lbs (1010 kg)
- **MSL:** Lift Capacity to Full Height @ 31.5 inches Forward of Pivot Pin: 3500 lbs (1590 kg)
- Maximum Lift Height: 148 inches at Pivot
- Rated Hydraulic Pressure: 2828 PSI
- Maximum Roll Back Angle: 49 Degrees
- Maximum Dump Angle: 42 Degrees
- Universal Euro Hook Type Implement Attachments
- Grille Guard Standard

MF941 AND MF946 LOADERS
FITS ALL MF5700 / MF6700 GLOBAL SERIES TRACTORS

- One Piece Main Frame Arms and Compression Molded Curved Cross Member
- Quick Attach Implement Mounting with Euro Style Single Lever Locking System
- 5 mm High Tensile, Tapered Box Section Frame
- 70 mm Arm Profile
- 80 mm Double Acting Lift Cylinders **(MF941)**
- 75 mm Double Acting Lift Cylinders **(MF946)**
- 80 mm Double Acting Bucket Cylinders **(MF 941)**
- 80 mm Double Acting Bucket Cylinders, Equal Displacement **(MF 946)**
- Industrial Grade Hydraulic Fittings and Hoses, Incorporated Internally Inside Loader Boom
- Central Valve, Equalized Oil Distribution Valve with Incorporated Relief Valves
- 4-Flat Face Hydraulic Tips on Boom and Bucket Circuits
- Protective Hose Cover
- **NSL:** Lift Capacity to Full Height @ 31.5 inches Forward of Pivot Pin: 3020 lbs
- **MSL:** Lift Capacity to Full Height @ 31.5 inches Forward of Pivot Pin: 3430 lbs
- Maximum Lift Height: 136 inches at Pivot
- **NSL:** Breakout Force: 3540 lbs
- **MSL:** Breakout Force: 3660 lbs
- Rated Hydraulic Pressure: 2828 PSI
- Universal Euro Hook Type Implement Attachments
- Grille Guard Standard

MASSEY FERGUSON®

MF 6700 PLATFORM

(F.O.B. PORT OF ENTRY)

Order Code	Catalog Number	Description	Approx. Weight (lb.)	List Price

ONE *ORDER CODE* FROM EACH GROUP MUST BE SPECIFIED (Unless In Base Option is Desired)

BASE MACHINE

DELUXE PLATFORM MODELS

4wd

MF6712~401	7296106	Massey 6712		67,000.00
MF6713~401	7296107	Massey 6713		69,500.00

NOT FOR SALE IN NEBRASKA

ALL Tractors will be charged $325 for Assembly

LOADER PROVISION

350-LL000	Base	Without Loader Provision		**In Base**
350-LL001	7296153	Front Loader Provision includes Frame Rails, Uprights, Subframe, Hydraulic Kit with Joystick and Valve, and Grille Guard		4,260.00

LOADER OPTIONS - 4wd Only

For Factory Loader Ready Tractors - Requires LL001

Non Self-Leveling

7296139	MF941X Loader - Euro Style, with Hose Extension Kit .	794	5,175.00
7296141	MF941 Loader - Euro Style, with Hose Extension Kit . .	1135	5,742.00

Mechanical Self-Leveling

7296143	MF946X Loader - Euro Style, with Hose Extension Kit .	926	6,030.00
7296145	MF946 Loader - Euro Style, with Hose Extension Kit . .	1290	7,873.00

Note: For Additional Loader Options, Refer to Implements Price List Revision

(F.O.B. PORT OF ENTRY)

Order Code	Catalog Number	Description	Approx. Weight (lb.)	List Price
CREEPER GEAR				
35-EN000	Base	Without Creeper Gear		**In Base**
35-EN002	7296147	Creeper Gear (13.68:1 Reduction) . . . . . **(Extended Factory Lead Time Approximately 120 Days)**		1,368.00
TIRE BRAND SELECTION				
70-TD0010	Base	Trelleborg Brand		**In Base**
FRONT AND REAR TIRES				
		NOTE: Tire Options not In Base are Subject to Extended Factory Lead Time of Approximately 120 Days		
		4WD - Flange Axle - Set of 2		
TIRES FOR 6712 AND 6713				
75-Base	7296816B3 7296718B3	Rear: 460/85R34 (18.4R34) R1W . . . . . Front: 380/85R24 (14.9R24) R1W		**In Base**
75-W1885	7296819B3 7296721B3	Rear: 380/85R38 (14.9R38) R1W . . . . . Front: 320/85R28 (12.4R28) R1W		(1,058.00)
75-W1886	7296817B3 7296719B3	Rear: 420/85R38 (16.9R38) R1W . . . . . Front: 340/85R28 (13.6R28) R1W		(128.00)
75-W1882	7296821B3 7296723B3	Rear: 460/85R38 (18.4R38) R1W . . . . . Front: 380/85R28 (14.9R28) R1W		1,582.00
REAR WHEEL WEIGHTS				
325-RD000	Base	Without Rear Wheel Weights		**In Base**
325-RD093	7296154	2 Sets of 3 Wheel Weights 661 Lbs (300 Kg) . . . . . **(Extended Factory Lead Time Approximately 120 Days)**	661	981.00

(F.O.B. PORT OF ENTRY)

Order Code	Catalog Number	Description	Approx. Weight (lb.)	List Price
BUCKET OPTIONS - Recommended with Loader Packages Only				
	Euro Style			
	72556223ML	83-inch Material Bucket 210S, 19 cu ft (0.70 cu yds). .	496	1,089.00
	72556038ML	83-inch Material Bucket 210H, 24 cu ft (0.89 cu yds) .	556	1,372.00
MISCELLANEOUS				
275-TC025	Base	English Language Operator's Manual		**In Base**
275-TC005	7296086	French Language Operator's Manual		No Charge
275-TC011	7296087	Spanish Language Operator's Manual		No Charge

MF 6700 CAB

MASSEY FERGUSON®

(F.O.B. PORT OF ENTRY)

DELUXE TRACTOR FEATURES

ENGINE SYSTEM
- 4.4L 4-Cylinder AGCO Power
- EPA Tier 4 Final and CARB Certified
- Air Cleaner: Dual Element Dry Type
- Air Cleaner Intake, Under Hood
- A-Pillar Exhaust with Heat Shield
- Cooling System: Antifreeze 50/50 Mix
- Cold Starting Aid: Intake Heater

HORSEPOWER
(Max Engine @ 2000 RPM; Rated Engine & PTO @ 2200 RPM)

MF6712 Deluxe Powershuttle:
120 Max Engine HP, 115 Engine HP, 99 PTO HP

MF6713 Deluxe Powershuttle:
130 Max Engine HP, 125 Engine HP, 109 PTO HP

FRONT AXLE
- 4wd: Center Driveline, Open Differential, Standard Hydraulically Actuated Differential Lock

POWERTRAIN
- Transmission: 24.8 mph (40 kph)
  12 X 12 Power Shuttle with Electro-Hydraulic Shuttle Lever, 6 Synchronized Gears, 2 Ranges
- Rear Axle: Inboard Planetary Final Drives, with Push Button Operated Mechanical Differential Lock, Flanged Rear Axle
- Brakes: Independent Oil Immersed Wet Disc Brakes with Independent Foot Pedal Operation
- Hook and Lever Parking Brake
- PTO: Independent 540/540E/1000 RPM Speeds, 6 and 21 Spline Flanged Shafts standard (1.375 In. Diameter), Independent Wet Disc Clutch, Electro-hydraulic Engagement

HYDRAULIC SYSTEM
- Implement System:
  Open Center System, Engine Driven Gear Pump, 26 GPM (98 LPM) Flow with Combined Flow,
  Optional Cable-controlled Loader Joystick with Mid Valves and 3rd Function Ready Buttons
- 2 Mechanical Controlled Spool Valves (1 x DA KO FL + 1 x DA KO FL)
- Rear Linkage:
  ASAE Category III / II with Telescopic Ball Ends
  Lift Capacity at 24": 9392 lbs (4260 kg)
  2 Adjustable Rear Linkage Turnbuckles, Top Link Draft Sensing
  Standard Telescopic Stabilizers
- Swing Offset Drawbar with 350/400/500mm Positions, Cat 2 Clevis

ELECTRICAL
- 12 Volt DC, Negative Ground
- Intake Air Pre Heater
- Wet, Maintenance Free SAE 775 CCA Battery
  120 AMP Alternator
- Ignition: Key with Safety Start
- Keyed Engine Shutoff
- Lighting: 4 Headlights, 2 Rear Marker Light Assemblies
- 2 Mid Mounted Worklights
- Engine RPM Memory Switch
- Rear Brake Lights
- 7 Pin ASAE Outlet Socket
- 30 Amp Auxiliary Electrical Socket

INSTRUMENTS
- Digital and Analog Dash Display with Performance Monitor
- Analog Engine Tachometer
- Analog Fuel Gauge
- Analog Engine Temperature
- Digital Transmission Display
- Digital Hour Meter
- Operation and Service Lights

OPERATOR ENVIRONMENT (CAB MODELS)
- Standard Cab Roof, HVAC with Manual Controls, 2 Low Mounted Doors, Aerial and Speakers, 2 Front and 2 Rear Roof Mounted Work Lights
- Electronic Controlled 3-Point Linkage witht Draft Control
- Rubber Floor Mat
- Telescopic Large Side Mirrors
- Internal Mirror
- Dual Adjustment Steering Column (Tilting and Telescopic)
- Seat: Mechanical Swiveling with Armrests
- Retractable Seat Belt
- Instructors Seat
- Cup Holder
- Pendant Style (Suspended) Foot Pedals
- Hand Rails
- Hand and Foot Throttle
- Left Side and Right Side Foot Step Entry
- External 3-Point Lift Control on Left/Right Hand Side Fenders
- Rear Wiper/Washer

OTHER STANDARD FEATURES
- One-Piece Tilting Hood
- Side Rear Fender Extensions
- Fuel Tank Guard
- Tool Box
- SMV Sign

MF6713 NOT FOR SALE IN STATE OF NEBRASKA

MASSEY FERGUSON®

MF 6700 CAB

(F.O.B. PORT OF ENTRY)

LOADER FEATURES

MF941X AND MF946X LOADERS
FITS ALL MF5700 / MF6700 GLOBAL SERIES TRACTORS

- One Piece Main Frame with Tapered Arms and Single Cross Member, Powder Painted with Corrosion Protection
- Quick Attach Loader Frame Mount with Pin Lock and Built in Parking Stands
- 5 mm High Tensile, Tapered Box Section Frame
- 70 mm Arm Profile
- 75 mm Double Acting Lift Cylinders **(MF941X)**
- 70 mm Double Acting Lift Cylinders **(MF946X)**
- 75 mm Double Acting Bucket Cylinders **(MF941X)**
- 75 mm Double Acting Bucket Cylinders, Equal Displacement **(MF946X)**
- Hydraulic Lines Routed Inside Main Frame for Protection and Visibility
- Pivots have Recessed Greasable Galvanized Steel Pins with Bushings at Key Points
- 4-Flat Face Hydraulic Tips on Boom and Bucket Circuits
- Protective Hose Cover
- Bucket Level Indicator
- **NSL:** Lift Capacity to Full Height @ 31.5 inches Forward of Pivot Pin: 2220 lbs (1010 kg)
- **MSL:** Lift Capacity to Full Height @ 31.5 inches Forward of Pivot Pin: 3500 lbs (1590 kg)
- Maximum Lift Height: 148 inches at Pivot
- Rated Hydraulic Pressure: 2828 PSI
- Maximum Roll Back Angle: 49 Degrees
- Maximum Dump Angle: 42 Degrees
- Universal Euro Hook Type Implement Attachments
- Grille Guard Standard

MF941 AND MF946 LOADERS
FITS ALL MF5700 / MF6700 GLOBAL SERIES TRACTORS

- One Piece Main Frame Arms and Compression Molded Curved Cross Member
- Quick Attach Implement Mounting with Euro Style Single Lever Locking System
- 5 mm High Tensile, Tapered Box Section Frame
- 70 mm Arm Profile
- 80 mm Double Acting Lift Cylinders **(MF941)**
- 75 mm Double Acting Lift Cylinders **(MF946)**
- 80 mm Double Acting Bucket Cylinders **(MF941)**
- 80 mm Double Acting Bucket Cylinders, Equal Displacement **(MF946)**
- Industrial Grade Hydraulic Fittings and Hoses, Incorporated Internally Inside Loader Boom
- Central Valve, Equalized Oil Distribution Valve with Incorporated Relief Valves
- 4-Flat Face Hydraulic Tips on Boom and Bucket Circuits
- Protective Hose Cover
- **NSL:** Lift Capacity to Full Height @ 31.5 inches Forward of Pivot Pin: 3020 lbs
- **MSL:** Lift Capacity to Full Height @ 31.5 inches Forward of Pivot Pin: 3430 lbs
- Maximum Lift Height: 136 inches at Pivot
- **NSL:** Breakout Force: 3540 lbs
- **MSL:** Breakout Force: 3660 lbs
- Rated Hydraulic Pressure: 2828 PSI
- Universal Euro Hook Type Implement Attachments
- Grille Guard Standard

MF 6700 CAB

MASSEY FERGUSON®

(F.O.B. PORT OF ENTRY)

Order Code	Catalog Number	Description	Approx. Weight (lb.)	List Price

ONE *ORDER CODE* FROM EACH GROUP MUST BE SPECIFIED (Unless In Base Option is Desired)

BASE MACHINE

DELUXE CAB MODELS

4wd

MF6712~401	7296109	Massey 6712		76,099.00
MF6713~401	7296110	Massey 6713		78,599.00

NOT FOR SALE IN NEBRASKA

ALL Tractors will be charged $325 for Assembly

LOADER PROVISION

350-LL000	Base	Without Loader Provision		**In Base**
350-LL001	7296163	Front Loader Provision includes Frame Rails, Uprights, Subframe, Hydraulic Kit with Joystick with Valve and 3rd Function Ready Buttons, and Grille Guard		4,340.00

LOADER OPTIONS - 4wd Only

For Factory Loader Ready Tractors - Requires LL001

Non Self-Leveling

	7296140	MF941X Loader - Euro Style	794	5,100.00
	7296142	MF941 Loader - Euro Style	1135	5,667.00

Mechanical Self-Leveling

	7296144	MF946X Loader - Euro Style	926	5,955.00
	7296146	MF946 Loader - Euro Style	1290	7,798.00

Note: For Additional Loader Options, Refer to Implements Price List Revision

MF 6700 CAB

(F.O.B. PORT OF ENTRY)

Order Code	Catalog Number	Description	Approx. Weight (lb.)	List Price
CREEPER GEAR				
35-EN000	Base	Without Creeper Gear		**In Base**
35-EN002	7296147	Creeper Gear (13.68:1 Reduction) . . . . . **(Extended Factory Lead Time Approximately 120 Days)**		1,368.00
AUXILIARY VALVES				
50-KX032	Base	2 Mechanically Controlled Spool Valves, ... (1 x DA KO FL + 1 x DA KO FL)		**In Base**
50-KX044	7296149	3 Mechanically Controlled Spool Valves, ... (1 x DA KO FL + 1 x DA KO FL + 1 x DA FD KO FL) (For Cab Models Only) **(Extended Factory Lead Time Approximately 120 Days)**		1,212.00
SEAT				
125-AE019	Base	Mechanical Swiveling Seat with Armrests		**In Base**
125-AE026	7296151	Air Suspended Swivel Seat with Armrests . . . . . **(Extended Factory Lead Time Approximately 120 Days)**		185.00

(F.O.B. PORT OF ENTRY)

Order Code	Catalog Number	Description	Approx. Weight (lb.)	List Price
TIRE BRAND SELECTION				
70-TD0010	Base	Trelleborg Brand		**In Base**
FRONT AND REAR TIRES				
		NOTE: Tire Options not In Base are Subject to Extended Factory Lead Time of Approximately 120 Days		
		4WD - Flange Axle - Set of 2		
TIRES FOR 6712 AND 6713				
75-Base	7296816B3 7296718B3	Rear: 460/85R34 (18.4R34) R1W . . . . . Front: 380/85R24 (14.9R24) R1W		**In Base**
75-W1885	7296819B3 7296721B3	Rear: 380/85R38 (14.9R38) R1W . . . . . Front: 320/85R28 (12.4R28) R1W		(1,058.00)
75-W1886	7296817B3 7296719B3	Rear: 420/85R38 (16.9R38) R1W . . . . . Front: 340/85R28 (13.6R28) R1W		(128.00)
75-W1882	7296821B3 7296723B3	Rear: 460/85R38 (18.4R38) R1W . . . . . Front: 380/85R28 (14.9R28) R1W		1,582.00
REAR WHEEL WEIGHTS				
325-RD000	Base	Without Rear Wheel Weights		**In Base**
325-RD093	7296154	2 Sets of 3 Wheel Weights 661 Lbs (300 Kg) . . . . . **(Extended Factory Lead Time Approximately 120 Days)**	661	981.00

(F.O.B. PORT OF ENTRY)

Order Code	Catalog Number	Description	Approx. Weight (lb.)	List Price
PIVOTING FRONT FENDERS				
155-WE000	Base	Without Pivoting Front Fenders		**In Base**
155-WE110	7296027	Pivoting Front Fenders - Standard Width . . . . . (4WD Cab Models Only) **(Extended Factory Lead Time Approximately 120 Days)**		650.00
BUCKET OPTIONS - Recommended with Loader Packages Only				
	Euro Style			
	72556223ML	83-inch Material Bucket 210S, 19 cu ft (0.70 cu yds). .	496	1,089.00
	72556038ML	83-inch Material Bucket 210H, 24 cu ft (0.89 cu yds) .	556	1,372.00
MISCELLANEOUS				
275-TC025	Base	English Language Operator's Manual		**In Base**
275-TC005	7296086	French Language Operator's Manual		No Charge
275-TC011	7296087	Spanish Language Operator's Manual		No Charge

MASSEY FERGUSON®

MF6700S SERIES

MASSEY FERGUSON®

6715S / 6716S SERIES

MID RANGE

6700S CLASSIC EDITION

MASSEY FERGUSON®

(F.O.B. PORT OF ENTRY)

CLASSIC EDITION FEATURES

ENGINE
6715S/6716S
AGCO POWER™ 4.9L (299 cu in.) 4 Cylinder, Tier 4f Compliant
- SCR Technology
- Air-to-Air Aftercooled, Common Rail Injection, Turbocharged

Electronic Engine Management (EEM) with Dual ERPM Settings
Electronic Controlled Viscous Fan Drive
Dual Element Dry Type Air Cleaner
Vertical Exhaust at Right Front Cab Post
Cooling System: Antifreeze to Minus 30F (-34C)
Fuel Tank Capacity: 59 Gal (225L)
DEF Tank Capacity: 10.8 Gal (41L)

POWERTRAIN
6715S: Dyna-4 Transmission
- 16F/16R Semi-Powershift, 4 Ranges with 4 Powershifts Per Range

6715S & 6716S: Dyna-6 Transmission
- 24F/24R Semi-Powershift, 4 Ranges with 6 Powershifts per Range

Multi-Disc Wet Brakes
Power Differential Lock
Independent PTO: 540/1000 RPM, 540 with 6 Spline Shaft, 1000 RPM with 21 Spline Shaft, Exchangeable Shafts
Rear Fender Mounted PTO Shut-Off
Flange Axles

FRONT WHEEL ASSIST AXLE
Power Front Axle (PFA)
- 8 Bolt Pattern: 6715S Dyna-4 & Dyna-6
- 10 Bolt Pattern: 6716S Dyna-6

Shielded Center Drive Line with Electro-Hydraulic Control & Front Wheel Drive Differential Lock
55 Degree Steering Angle

HYDRAULICS
26 gpm (100L/min) Twin Flow Open Center System
2900 PSI (200 Bar) Maximum Pressure
3 Mechanical Valves – Lever Controlled on Right Hand Console
Hydrostatic Power Steering

HITCH
3 Point Hitch: Category 2/3 Linkage Ball Ends
- 8,520 lbs lift capacity @ 24"
- Active Transport Control
- Lower Link Sensing
- Electronic Draft Control, Electronic Height Control, and Rate of Drop
- Variable Float Telescopic Stabilizers
- Left and Right Side External 3 Point Control

Drawbar: Category 2, Clevis and Drop Pin

ELECTRICAL SYSTEM
175 Amp Alternator
2 – 12V Batteries, 600 CCA Each (SAE)
7 Pin ASAE Rear Trailer Electrical Outlet
Electrical Isolator Switch and Jumpstart Point
110V Engine Block Heater
Ignition with Neutral Start and Key Shutoff

LIGHTING
8 Front Hood Mounted Lights
Four Front Single Bulb Worklights
Two Rear Double Bulb Worklights
Tail Lights, Flashing Warning Lights and Turn Signals

INSTRUMENTS
Tachometer: Digital and Analog
PTO Speed: Digital
Ground Speed Display: Digital
Fuel Level, DEF Level, and Coolant Temp Gauges
Warning/Information Lights

OPERATOR AREA
6 Post Cab
Transmission Control T-Handle on Right Hand Console
Adjustable Steering Column
Front Sun Visor
Air Conditioning and Heater
Air Suspended Seat - Manual Adjustment
Front and Rear Windshield Wiper/Washer
Dual Large Telescoping Outside Rear View Mirrors
Single Inside Rear View Mirror
2 Audio Speakers and Antenna
3 Pin 12V Power Outlets
12V Cigarette Lighter Style Power Outlet

WHEELS AND TIRES
Rear 460/85R38 R1W Single Wheels
Front 380/85R28 R1W Single Waffle Wheels

OTHER STANDARD FEATURES
Lockable Tool Box
SMV Sign
Molded Rear Fenders
English Literature

MF6700 models can not be sold in Nebraska

(F.O.B. PORT OF ENTRY)

Order Code	Catalog Number	Description	Approx. Weight (lb.)	List Price

ONE *ORDER CODE* FROM EACH GROUP MUST BE SPECIFIED. (Unless In Base Option is desired)

BASE MACHINE

DYNA-4 EDITIONS

MF6715S~D4~ES~01	7295221	Massey 6715S Classic Tractor 115 PTO HP		115,014.00

DYNA-6 EDITIONS

MF6715S~D6~ES~01	7295222	Massey 6715S Classic Tractor 115 PTO HP		120,154.00
MF6716S~D6~ES~01	7295223	Massey 6716S Classic Tractor 125 PTO HP		126,654.00

TRANSMISSION OPTIONS FOR DYNA-4 EDITIONS

25-EA637	Base	4x4 Dyna-4 AUTODRIVE Transmission with . . . . . 16F/16R gears. 25 MPH (40 KPH)		**In Base**
25-NA032	7295234	4x4 Dyna-4 AUTODRIVE Transmission with. . . . . 16F/16R gears. 25 MPH (40 KPH) Includes: Suspended Power Front Axle		6,898.00

TRANSMISSION OPTIONS FOR DYNA-6 EDITIONS

FOR 6715S

25-EA655	Base	6x4 Dyna-6 AUTODRIVE Transmission with . . . . . 24F/24R gears. 25 MPH (40 KPH)		**In Base**
25-NA032	7295235	6x4 Dyna-6 AUTODRIVE Transmission with . . . . . 24F/24R gears. 25 MPH (40 KPH) Includes: Suspended Power Front Axle		6,898.00
25-G1061	7295236	6X4 Dyna-6 AUTODRIVE Transmission with . . . . 24F/24R gears. 31 MPH (50 KPH) Includes: Suspended Power Front Axle Includes: High Pressure Brakes		9,881.00

FOR 6716S

25-EA655	Base	6x4 Dyna-6 AUTODRIVE Transmission with . . . . . 24F/24R gears. 25 MPH (40 KPH)		**In Base**
25-NA032	7295238	6x4 Dyna-6 AUTODRIVE Transmission with . . . . . 24F/24R gears. 25 MPH (40 KPH) Includes: Suspended Power Front Axle		6,898.00
25-G1061	7295239	6X4 Dyna-6 AUTODRIVE Transmission with . . . . 24F/24R gears. 31 MPH (50 KPH) Includes: Suspended Power Front Axle Includes: High Pressure Brakes		9,881.00

BRAKES

270-EG018	7293472	High Pressure Brakes. . . . . Dyna-6 Models Only Requires: Front Axle Suspension if DP057 or DP100 hyd system		1,350.00

MASSEY FERGUSON®

(F.O.B. PORT OF ENTRY)

Order Code	Catalog Number	Description	Approx. Weight (lb.)	List Price
AUXILIARY HYDRAULIC FLOW				
370-DP100	Base	26 gpm (100L/min) Twin Flow Open Center System . . (Requires Auxiliary Valve 1 & 2 - KX006)		**In Base**
370-DP057	7295250	15 gpm (57 L/min) Open Center System . . . . . (Requires Auxiliary Valve 1 & 2 - KX006)		(4,559.00)
370-DP110	7295251	29 gpm (110 L/min) Closed Center Load . . . . . Sensing (CCLS) (Requires Auxiliary Valve 1 & 2- KX010 In Base Option)		3,571.00
AUXILIARY VALVE 1 & 2				
50-KX006	Base	2 Mechanical Controlled Valves, ... Located on right hand console. (1st - Double Acting, Flow Dividing, Kickout, Zero Leak and 2nd - Single Acting/Double Acting, Zero Leak, Notch Float) (Requires DP057 or DP100)		In Base
50-KX010	7295243	2 Mechanical Controlled Valves, ... Located on right hand console. (1st and 2nd - Flow Dividing, Kickout, Zero Leak, Float) (Requires DP110)		No Charge
AUXILIARY VALVE 3 & 4				
55-MU002	Base	3rd Mechanical Valve Only, ... Located on right hand console. (Single Acting/Double Acting) (Requires DP057 or DP100) (Requires KX006)		**In Base**
55-MU003	7295245	3rd Mechanical Valve Only, ... Located on right hand console. (Kickout, Zero Leak, Flow Dividing, Float) (Requires DP110) (Requires KX010)		No Charge
55-MU011	7295244	3rd and 4th Mechanical Valve, ... Located on right hand console. (3rd - Single Acting/Double Acting and 4th - Double Acting, Kickout, Float) (Requires DP057 or DP100) (Requires KX006)		1,170.00
55-MU012	7295246	3rd and 4th Mechanically Controlled Valves, ... with levers located in Right Hand Console Kickout, Zero Leak, Flow Dividing, Float (Requires DP110) (Requires KX010)		1,170.00
POWER BEYOND				
90-GR000	Base	Less Power Beyond		**In Base**
90-GR010	7295153	Power Beyond Couplers P/T/LS/D . . . . . Requires DP110		737.00
Oil Catch				
380-GB020	In Base	With Oil Catch		**In Base**
380-GB000	7293664	Less Oil Catch. . . . . Required for Dyna-4 when DP057 or DP100 are ordered		No Charge

(F.O.B. PORT OF ENTRY)

Order Code	Catalog Number	Description	Approx. Weight (lb.)	List Price
REAR AXLE				
60-EE400	Base	Flange Axle		**In Base**
60-EE402	7293024	Short Bar Rear Axle, 80 in. (2028 mm) Length, 3.23 in (82 mm) Diameter		622.00
60-EE404	7293024	Long Bar Rear Axle, 105 in (2672 mm) Length, 3.23 in (82 mm) Diameter (Requires Extremity Lights VE019)		1,380.00
REAR 3-POINT HITCH				
95-GC009	Base	Category 2/3 Telescopic Ball End Links		**In Base**
95-GC022	7293572	Category 3 Hook End Links and Cat 2/3 Balls and Cones		No Charge
REAR THREE POINT STABILIZERS				
165-YG001	Base	Variable Float Telescopic Stabilizers		**In Base**
165-YG009	7293574*	Automatic Stabilizers (Requires GC022 Lower Links) ***Available with Dyna-6 Transmissions Only**		338.00
INSTRUMENT PANEL / CONTROL CENTER DISPLAY (CCD)				
175-BA005	Base	Analog and Digital Instrument Panel w/o Radar or Slip Control. No Control Center Display (CCD)		**In Base**
175-BA003	7293084	Analog and Digital Instrument Panel with Radar (For Actual Ground Speed) and Slip Control. (For No Control Center Display (CCD))		882.00

(F.O.B. PORT OF ENTRY)

Order Code	Catalog Number	Description	Approx. Weight (lb.)	List Price

TIRES for 6715S Dyna-4 and Dyna-6

TIRE BRAND SELECTION

70-Blank	7294212	Factory Brand Choice		No Charge
70-T0001	7294195	Michelin Brand Required		1,615.00
70-T0007	7294197	Firestone Brand Required		1,205.00
70-T0010	7294198	Trelleborg Brand Required		1,205.00

FRONT AND REAR TIRES

FLANGE AXLE*

Rear: Single Pressed Steel Manual Adjust - Set of 2
Front: Waffle Wheel

75-Base	7292864 7294786	Rear: 460/85R38 R1W (18.4R38) (MI, FI, TR) Front: 380/85R28 R1W (14.9R28) (MI, FI, TR)		**In Base**
75-W1309	7292865 7293763	Rear: 520/85R38 R1W (MI, FI, TR) Front: 420/85R28 R1W (MI, FI, TR)		1,398.00
75-W1662	7292861 7293760	Rear: 460/85R30 R1W (MI, FI) Front: 340/85R24 R1W (MI, FI)		(2,036.00)
75-W1663	7292862 7293761	Rear: 460/85R34 R1W (MI, FI, TR) Front: 340/85R28 R1W (MI, FI, TR)		(1,692.00)
75-W1664	7292863 7293761	Rear: 420/85R38 R1W (MI, FI, TR) Front: 340/85R28 R1W (MI, FI, TR)		(1,644.00)

Rear: Single Welded Pressed Steel - Set of 2
Front: Fixed Welded Steel Rim

75-W1476	7292871 7293767	Rear: 480/80R34 Industrial (Nokian Industrial) Front: 400/80R24 Industrial(Nokian Industrial)		5,984.00
75-W1478	7292873 7293769	Rear: 540/80R38 (Nokian Industrial) Front: 440/80R28 (Nokian Industrial)		10,362.00
75-W1286	7292858 7293757	Rear: 540/65R38 R1W (MI, FI, TR) Front: 440/65R28 R1W (MI, FI, TR)		702.00
75-W1511	7292872 7293768	Rear: 480/80R38 Industrial (Nokian Industrial) Front: 400/80R28 Industrial (Nokian Industrial)		8,109.00
75-W1257	7292859 7294785	Rear: 600/65R38 R1W (MI, FI, TR) Front: 480/65R28 R1W (MI, FI, TR)		1,410.00
75-W1258	7292860 7293759	Rear: 650/65R38 R1W (MI, FI, TR) Front: 540/65R28 R1W (MI, FI, TR)		4,373.00

BAR AXLES- SHORT AND LONG

Rear: Single Welded Pressed Steel - Set of 2
Front: Fixed Welded Steel Rim

75-W1667	7294903B5 7293767	Rear: 480/80R34 Industrial (Nokian Industrial) Front: 400/80R24 Industrial (Nokian Industrial)		6,436.00
75-W1670	7294899B5 7293757	Rear: 540/65R38 R1W (MI, FI, TR) Front: 440/65R28 R1W (MI, FI, TR)		759.00
75-W1572	7294894B5 7294785	Rear: 600/65R38 R1W (MI, FI, TR) Front: 480/65R28 R1W (MI, FI, TR)		1,340.00
75-W1673	7294905B5 7293769	Rear: 540/80R38 (Nokian Industrial) Front: 440/80R28 (Nokian Industrial)		10,372.00
75-W1262	7294895B5 7293759	Rear: 650/65R38 R1W (MI, FI, TR) Front: 540/65R28 R1W (MI, FI, TR)		4,383.00
75-W1672	7294904B5 7293768	Rear: 480/80R38 Industrial (Nokian Industrial) Front: 400/80R28 Industrial (Nokian Industrial)		7,856.00

(F.O.B. PORT OF ENTRY)

Order Code	Catalog Number	Description	Approx. Weight (lb.)	List Price

TIRES for 6715S Dyna-4 and Dyna-6

FRONT AND REAR TIRES - CONTINUED

		BAR AXLES- SHORT AND LONG		
		Rear: Single Semi Dished Cast Centers- Set of 2		
		Front: Waffle Wheel		
75-W1300	7294897B5 7294786	Rear: 460/85R38 R1W (18.4R38) (MI, FI, TR) . . . . . Front: 380/85R28 R1W (14.9R28) (MI, FI, TR)		1,436.00
75-W1318	7294883B5 7293764	Rear: 380/90R46 R1W (MI) . . . . . . Front: 380/85R30 R1W (MI)		2,865.00
75-W1409	7294884B5 7293764	Rear: 420/80R46 R1W (MI) . . . . . . Front: 380/85R30 R1W (MI)		3,562.00
75-W1388	7294884B5 7293763	Rear: 420/80R46 R1W (MI) . . . . . . Front: 420/85R28 R1W (MI)		4,202.00
75-W1377	7294882B5 7293764	Rear: 480/80R42 R1W (MI, TR) . . . . . . Front: 380/85R30 R1W (MI, TR)		2,861.00
75-W1384	7294882B5 7293763	Rear: 480/80R42 R1W (MI, TR) . . . . . . Front: 420/85R28 R1W (MI, TR)		3,501.00
75-W1533	7294893B5 7293763	Rear: 520/85R38 R1W (MI, FI, TR) . . . . . . Front: 420/85R28 R1W (MI, FI, TR)		4,178.00
		BAR AXLES- LONG		
		Rear: Dual Cast Inner / Steel Outer - Set of 4		
		Front: Waffle Wheel		
75-W1374	7294898B5 7294786	Duals: 460/85R38 R1W (18.4R38) (MI, TR, FI) . . . . . Front: 380/85R28 R1W (14.9R28) (MI, TR, FI)		8,609.00
75-W1379	7294887B5 7293764	Duals: 380/90R46 R1W (MI) . . . . . . Front: 380/85R30 R1W (MI)		10,312.00
75-W1410	7294888B5 7293764	Duals: 420/80R46 R1W (MI) . . . . . . Front: 380/85R30 R1W (MI)		11,274.00
75-W1471	7294888B5 7293763	Duals: 420/80R46 R1W (MI) . . . . . . Front: 420/85R28 R1W (MI)		11,914.00
75-W1380	7294886B5 7293764	Duals: 480/80R42 R1W (MI, TR) . . . . . . Front: 380/85R30 R1W (MI, TR)		9,583.00
75-W1386	7294886B5 7293763	Duals: 480/80R42 R1W (MI, TR) . . . . . . Front: 420/85R28 R1W (MI, TR)		10,223.00
75-W1658	7294896B5 7293763	Duals: 520/85R38 R1W (MI, TR, FI) . . . . . . Front: 420/85R28 R1W (MI, TR, FI)		10,552.00
		BAR AXLES- LONG		
		Rear: Dual Cast Inner / Cast Outer - Set of 4		
		Front: Waffle Wheel		
75-W1408	7294925B5 7293764	Duals: 380/90R46 R1W (MI) . . . . . . Front: 380/85R30 R1W (MI)		10,415.00
75-W1412	7294926B5 7293764	Duals: 420/80R46 R1W (MI) . . . . . . Front: 380/85R30 R1W (MI)		11,377.00
75-W1406	7294926B5 7293763	Duals: 420/80R46 R1W (MI) . . . . . . Front: 420/85R28 R1W (MI)		12,017.00
75-W1407	7294927B5 7293764	Duals: 480/80R42 R1W (MI, TR) . . . . . . Front: 380/85R30 R1W (MI, TR)		9,686.00
75-W1405	7294927B5 7293763	Duals: 480/80R42 R1W (MI, TR) . . . . . . Front: 420/85R28 R1W (MI, TR)		10,326.00

(F.O.B. PORT OF ENTRY)

Order Code	Catalog Number	Description	Approx. Weight (lb.)	List Price

TIRES 6716S Dyna-6

FRONT AND REAR TIRES

FLANGE AXLE*

Rear: Single Pressed Steel Manual Adjust - Set of 2
Front: Waffle Wheel

75-Base	7292864 7293762B2	Rear: 460/85R38 R1W (18.4R38) (MI, FI, TR) . . . . Front: 380/85R28 R1W (14.9R28) (MI, FI, TR)		**In Base**
75-W1309	7292865 7294762B2	Rear: 520/85R38 R1W (MI, FI, TR) . . . . . . Front: 420/85R28 R1W (MI, FI, TR)		1,398.00

Rear: Single Welded Pressed Steel - Set of 2
Front: Fixed Welded Steel Rim

75-W1478	7292873 7294791B2	Rear: 540/80R38 (Nokian Industrial) . . . . . . Front: 440/80R28 (Nokian Industrial)		10,362.00
75-W1286	7292858 7294784B2	Rear: 540/65R38 R1W (MI, FI, TR) . . . . . . Front: 440/65R28 R1W (MI, FI, TR)		702.00
75-W1257	7292859 7293758B2	Rear: 600/65R38 R1W (MI, FI, TR) . . . . . . Front: 480/65R28 R1W (MI, FI, TR)		1,410.00
75-W1258	7292860 7294783B2	Rear: 650/65R38 R1W (MI, FI, TR) . . . . . . Front: 540/65R28 R1W (MI, FI, TR)		4,373.00

BAR AXLES- SHORT AND LONG

Rear: Single Welded Pressed Steel - Set of 2
Front: Fixed Welded Steel Rim

75-W1670	7294899B5 7294784B2	Rear: 540/65R38 R1W (MI, FI, TR) . . . . . . Front: 440/65R28 R1W (MI, FI, TR)		759.00
75-W1572	7294894B5 7293758B2	Rear: 600/65R38 R1W (MI, FI, TR) . . . . . . Front: 480/65R28 R1W (MI, FI, TR)		1,340.00
75-W1673	7294905B5 7294791B2	Rear: 540/80R38 (Nokian Industrial) . . . . . . Front: 440/80R28 (Nokian Industrial)		10,372.00
75-W1262	7294895B5 7294783B2	Rear: 650/65R38 R1W (MI, FI, TR) . . . . . . Front: 540/65R28 R1W (MI, FI, TR)		4,383.00

(F.O.B. PORT OF ENTRY)

TIRES 6716S Dyna-6

FRONT AND REAR TIRES - CONTINUED

Order Code	Catalog Number	Description	Approx. Weight (lb.)	List Price
		BAR AXLES- SHORT AND LONG		
		Rear: Single Semi Dished Cast Centers- Set of 2		
		Front: Waffle Wheel		
75-W1300	7294897B5	Rear: 460/85R38 R1W (18.4R38) (MI, FI, TR)		1,436.00
	7293762B2	Front: 380/85R28 R1W (14.9R28) (MI, FI, TR)		
75-W1394	7294885B5	Rear: 320/90R50 R1W (MI)		4,050.00
	7294769B2	Front: 320/85R34 R1W (MI)		
75-W1548	7294883B5	Rear: 380/90R46 R1W (MI)		3,614.00
	7294769B2	Front: 320/85R34 R1W (MI)		
75-W1318	7294883B5	Rear: 380/90R46 R1W (MI)		2,865.00
	7294765B2	Front: 380/85R30 R1W (MI)		
75-W1624	7294884B5	Rear: 420/80R46 R1W (MI)		4,311.00
	7294769B2	Front: 320/85R34 R1W (MI)		
75-W1409	7294884B5	Rear: 420/80R46 R1W (MI)		3,562.00
	7294765B2	Front: 380/85R30 R1W (MI)		
75-W1388	7294884B5	Rear: 420/80R46 R1W (MI)		4,202.00
	7294762B2	Front: 420/85R28 R1W (MI)		
75-W1620	7294882B5	Rear: 480/80R42 R1W (MI)		3,610.00
	7294769B2	Front: 320/85R34 R1W (MI)		
75-W1377	7294882B5	Rear: 480/80R42 R1W (MI, TR)		2,861.00
	7294765B2	Front: 380/85R30 R1W (MI, TR)		
75-W1384	7294882B5	Rear: 480/80R42 R1W (MI, TR)		3,501.00
	7294762B2	Front: 420/85R28 R1W (MI, TR)		
75-W1533	7294893B5	Rear: 520/85R38 R1W (MI, FI, TR)		4,178.00
	7294762B2	Front: 420/85R28 R1W (MI, FI, TR)		

MASSEY FERGUSON®

(F.O.B. PORT OF ENTRY)

Order Code	Catalog Number	Description	Approx. Weight (lb.)	List Price

TIRES 6716S Dyna-6

BAR AXLES- LONG
Rear: Dual Cast Inner / Steel Outer - Set of 4
Front: Waffle Wheel

75-W1374	7294898B5 7293762B2	Duals: 460/85R38 R1W (18.4R38) (MI, TR, FI) Front: 380/85R28 R1W (14.9R28) (MI, TR, FI)		8,609.00
75-W1395	7294889B5 7294769B2	Duals: 320/90R50 R1W (MI) Front: 320/85R34 R1W (MI)		4,050.00
75-W1549	7294887B5 7294769B2	Duals: 380/90R46 R1W (MI) Front: 320/85R34 R1W (MI)		11,061.00
75-W1379	7294887B5 7294765B2	Duals: 380/90R46 R1W (MI) Front: 380/85R30 R1W (MI)		10,312.00
75-W1625	7294888B5 7294769B2	Duals: 420/80R46 R1W (MI) Front: 320/85R34 R1W (MI)		12,023.00
75-W1410	7294888B5 7294765B2	Duals: 420/80R46 R1W (MI) Front: 380/85R30 R1W (MI)		11,274.00
75-W1471	7294888B5 7294762B2	Duals: 420/80R46 R1W (MI) Front: 420/85R28 R1W (MI)		11,914.00
75-W1621	7294886B5 7294769B2	Duals: 480/80R42 R1W (MI) Front: 320/85R34 R1W (MI)		10,332.00
75-W1380	7294886B5 7294765B2	Duals: 480/80R42 R1W (MI, TR) Front: 380/85R30 R1W (MI, TR)		9,583.00
75-W1386	7294886B5 7294762B2	Duals: 480/80R42 R1W (MI, TR) Front: 420/85R28 R1W (MI, TR)		10,223.00
75-W1658	7294896B5 7294762B2	Duals: 520/85R38 R1W (MI, TR, FI) Front: 420/85R28 R1W (MI, TR, FI)		10,552.00

BAR AXLES- LONG
Rear: Dual Cast Inner / Cast Outer - Set of 4
Front: Waffle Wheel

75-W1408	7294925B5 7294765B2	Duals: 380/90R46 R1W (MI) Front: 380/85R30 R1W (MI)		10,415.00
75-W1412	7294926B5 7294765B2	Duals: 420/80R46 R1W (MI) Front: 380/85R30 R1W (MI)		11,377.00
75-W1406	7294926B5 7294762B2	Duals: 420/80R46 R1W (MI) Front: 420/85R28 R1W (MI)		12,017.00
75-W1407	7294927B5 7294765B2	Duals: 480/80R42 R1W (MI, TR) Front: 380/85R30 R1W (MI, TR)		9,686.00
75-W1405	7294927B5 7294762B2	Duals: 480/80R42 R1W (MI, TR) Front: 420/85R28 R1W (MI, TR)		10,326.00

(F.O.B. PORT OF ENTRY)

Order Code	Catalog Number	Description	Approx. Weight (lb.)	List Price
PTO				
100-LC001	Base	540 RPM 6 Spline and1000 RPM 21 Spline . . . . . Exchangeable Shaft with No Economy		**In Base**
100-LC002	7293068	Standard and Economy PTO Drive -2000 & 1550. . . . Engine RPM. Exchangeable Shaft PTO- 540 RPM 6 Spline + 1000 RPM 21 Spline		945.00
FRONT HITCH				
230-FA000	Base	Less Front Hitch		**In Base**
230-F1132	7293594	2800 kg (6172 lbs) Front Linkage with . . . . . 1 Set of Hydraulic Couplers		6,376.00
230-F1154	7295193	2800 kg (6172 lbs) Front Linkage with 1 Set of . . . . . Hydraulic Couplers with Belly Weight		7,231.00
230-F1155	7295194	2800 kg (6172 lbs) Front Linkage with 1 Set . . . . . of Hydraulic Couplers Cylinders with 1 Set of Hydraulic Couplers with Front PTO (21 Spline Anti-Clockwise)		13,240.00
LOADER PROVISION				
350-LL000	Base	Less Loader Provisions.		**In Base**
350-LL001	7293445	Front Loader Provision - Mech Loader Control, ... Including Hydraulics and Subframe (Not recommended with 15 gpm (57 L/min) Open Center System- DP057)		6,403.00
CAB				
365-AF009	7294248	Radio, AM/FM, MP3 Compatible		670.00
125-AE027	7293430	Air Suspended Seat - Automatic Adjustment		355.00
115-AM084	7293559	Mechanical Cab Suspension		1,705.00
140-AI020	7293077	Standard Cab Roof with Roof Hatch		273.00
140-E1022	7293078	Visio roof . . . . . Not Compatible with: Automatic Climate Control (AQ004) 2 Front and 2 Rear Xenon Work Lights (VG078) Instrument Control Panel (Auto Steering Ready) (BA012) Instrument Control Panel (Auto Steering Complete) (BA021)		1,586.00

MASSEY FERGUSON®

(F.O.B. PORT OF ENTRY)

Order Code	Catalog Number	Description	Approx. Weight (lb.)	List Price
FRONT WEIGHTS				
285-YA112	7293487	121 lbs. (55 kg.) Front Weights, Set of 12 . . . . . with Hardware - total Weight 1,455 lbs. (660 kg.)		2,295.00
REAR WHEEL WEIGHTS				
325-RD040	7294192*	551 lbs. (250 kg.) Weights, Set of 2 . . . . . Mounts Externally to Wheel	1102	1,845.00
325-RD041	7294200*	551 lbs. (250 kg.) Weights, Set of 4 . . . . . Mounts Externally to Wheel	2204	3,689.00
		***NOT COMPATIBLE WITH 30" AND 34" RIMS**		
BELLY AND HITCH WEIGHTS				
245-YD001	7293374	1 Belly Weight - 584 lbs. (265 kg.) . . . . . (For use **WITHOUT** Front 3-Point Hitch)	584	1,490.00
345-YB003*	7294119	1873 lbs. (850 kg) Monoblock Weight	1984	3,440.00
345-YB004*	7294271	3,307 lbs (1500 kg) Monoblock Weight		5,677.00
***NOT COMPATIBLE WITH FRONT WEIGHTS**				
ELECTRICAL				
215-CB002	Base	Engine Block Heater - 110 Volt		**In Base**
215-CB000	7293593	Less Engine Block Heater		(204.00)
ALTERNATOR				
220-CE020	Base	175 AMP Alternator. . . . . (Not Available with ISOBUS)		**In Base**
220-CE019	7293533	Twin 120 AMP Alternators.		391.00
TELEMETRY				
160-BS003	7295247	Telemetry Ready (Antenna, Wiring and Box)		950.00
LIGHTING				
205-VF013	7293103	Dual Roof-Mounted Rotating Beacons, Left and Right . (Includes SAE SMV sign)	1102	522.00
195-VG078	7295103	2 Xenon and 2 Single Bulb Front Worklights, ... 2 Xenon Rear Worklights (Not Compatible with Visio roof (E1022))		3,392.00
360-VE019	7293476	Extremity Lighting . . . . . (Required with Long Bar Axle)		756.00
190-VK004	7293597	Worklights on Handrails and Rear Fenders		543.00

(F.O.B. PORT OF ENTRY)

Order Code	Catalog Number	Description	Approx. Weight (lb.)	List Price

PIVOTING FRONT FENDERS

155-WE000	Base	Less Pivoting Front Fenders		**In Base**
155-WE110	7294204	Pivoting Front Fenders - Standard Width . . . . . Width depends on tire selection; see Chart Below		1,699.00

Fender Size		
Standard	**Wide**	**Tire Sizes**
12.6" (320 mm)	13.9" (355 mm)	320/85R34 (12.4R34)
13.9" (355 mm)	14.9" (380 mm)	340/85R24 (13.6R24) 340/85R28 (13.6R28)
14.9" (380 mm)	16.1" (410 mm)	380/85R28 (14.9R28) 380/85R30 (14.9R30) 400/80R24 400/80R28
16.1" (410 mm)	18.5" (470 mm)	420/85R28 (16.9R28) 440/65R28
18.5" (470 mm)	20.4" (520 mm)	440/80R28 480/65R28
20.4" (520 mm)	24.4" (620 mm)	540/65R28

REAR FENDERS

255-WD012	Base	Rear Fenders without Extensions, 78.74"(2.00 M) . . .		**In Base**
255-WD017	7293107	Wide Fender -90.55" (2.3 M) with Rear Extension . . .		1,323.00
255-WD020	7293109	Extra Wide Fender -100.4" (2.55 M) . . . . . with Rear Extension		1,464.00

(F.O.B. PORT OF ENTRY)

Order Code	Catalog Number	Description	Approx. Weight (lb.)	List Price
MISCELLANEOUS				
35-EN002	7293402	14:1 Super Creeper Reduction Gear		2,907.00
250-GS001	7293100	Hydraulic Trailer Brakes		817.00
250-GS062	7293551	Pneumatic Trailer Brakes		6,767.00
250-GS067	7293552	Pneumatic & Hydraulic Trailer Brakes		7,508.00
225-LQ001	7293553	Water Separator (Fuel Filter)		466.00
275-TC005	7294210	French Language OIB		No Charge
275-TC011	7294211	Spanish Language OIB		No Charge
DEALER INSTALLED OPTIONS				
FRONT WEIGHTS				
	5020186M	8 x 55 KG (121 lbs.) Front Weights	968	1,545.00
	5020187M	10 x 55 KG (121 lbs.) Front Weights	1210	1,932.00
	5020188M	12 x 55 KG (121 lbs.) Front Weights	1452	2,295.00
	5020189M	14 x 55 KG (121 lbs.) Front Weights	1694	2,678.00

MASSEY FERGUSON®

6700S DELUXE EDITION

(F.O.B. PORT OF ENTRY)

DELUXE EDITION FEATURES

ENGINE

6714S/6715S/6716S

AGCO POWER™ 4.9L (299 cu in.) 4 Cylinder, Tier 4f Compliant
- SCR Technology
- Air-to-Air Aftercooled, Common Rail Injection, Turbocharged

Electronic Engine Management (EEM) with Dual ERPM Settings
Electronic Controlled Viscous Fan Drive
Dual Element Dry Type Air Cleaner
Vertical Exhaust at Right Front Cab Post
Cooling System: Antifreeze to Minus 30F (-34°C)
Fuel Tank Capacity: 59 Gal (225L)
DEF Tank Capacity: 10.8 Gal (41L)

POWERTRAIN

6714S/6715S/6716S: DYNA-VT
- Continuously Variable Transmission, 60 ft/h to 25 MPH (18.2 Meters/h to 40 KPH)
- Dynamic Tractor Management (DTM) with Two Programmable Cruise Speeds
- Short Bar Rear Axle, 90 In. (2277mm) Long, 3.74 in. (95mm) Diameter

6715S/6716S: DYNA-6 TRANSMISSION
- 24F/24R Semi-Powershift, 4 Ranges with 6 Powershifts per Range, 40 KPH
- Dynamic Tractor Management (DTM) with Two Programmable Cruise Speeds
- Short Bar Rear Axle, 80 In. (2028mm) Long, 3.23 In (82mm) Diameter

Multi-Disc Wet Brakes
Power Differential Lock
Independent PTO:

DYNA-VT:
540/540E/1000 RPM Flanged Shaft, 540 with 6 Spline and 1000 with 21 Spline

DYNA-6: 540/540E/1000/1000E Exchangeable Shaft, 540 with 6 Spline and 1000 with 21 Spline with Electric Control

Rear Fender Mounted PTO Shut-Off

FRONT WHEEL ASSIST AXLE

Pivoting Front Fenders
Power Front Axle (PFA)
- 8 Bolt Pattern: 6715S Dyna-6 and 6714S Dyna-VT
- 10 Bolt Pattern: 6716S Dyna-6 and 6715S/6716S Dyna-VT

Non-Suspended Front Axle
Shielded Center Drive Line with Electro-Hydraulic Control & Front Wheel Drive Differential Lock
55 Degree Steering Angle

HYDRAULICS

Power Beyond Couplers
Closed Center Load Sensing 29 gpm (110 L/Min) Pump
2900 PSI (200 Bar) Maximum Pressure
2 Electric Valves - Fingertip Controlled on Armrest, 2 Mechanical Valves – Lever Controlled on Right Hand Console
Fast Steering

HITCH

3-Point Hitch: Category 2/3 Linkage Ball Ends
- 8,520 lbs lift capacity @ 24"
- 11,400 lbs lift capacity @ 24" for Dyna-VT
- Lower Link Sensing
- Electronic Draft Control, Electronic Height Control & Rate of Drop
- Variable Float Telescopic Stabilizers
- Left & Right Side External 3 Point Control with one Spool Valve Control

Drawbar: Category 2, Clevis and Drop Pin

ELECTRICAL SYSTEM

2 – 120 Amp Alternators
2 – 12V Batteries, 600 CCA Each (SAE)
7 Pin ASAE Rear Trailer Electrical Outlet
Electrical Isolator Switch and Jumpstart Point
110V Engine Block Heater
Ignition with Neutral Start and Key Shutoff

LIGHTING

8 Front Hood Mounted Lights
Four Front Single Bulb Worklights
Two Rear Double Bulb Worklights
Two Field Lights on Hand Rails and Rear Fenders with Tail Lights, Flashing Warning Lights, and Turn Signals

INSTRUMENTS

Control Center Display (CCD)
- Video Input
- Electric Valve Control
- ISOBUS Compliant

Radar with Slip Control
Tachometer: Digital and Analog
PTO Speed: Digital
Ground Speed Display: Digital
Fuel Level, DEF Level, and Coolant Temp Gauges
Warning/Information Lights

OPERATOR AREA

6 Post Cab
Mechanical Cab Suspension
Transmission Control T-Handle on Armrest
Adjustable Steering Column
Front Sun Visor
Air Conditioning and Heater
Air Suspended Seat - Automatic Adjustment
Front and Rear Windshield Wiper/Washer
Dual Large Telescoping Outside Rear View Mirrors
Single Inside Rear View Mirror
Radio with AM/FM/CD/MP3/Bluetooth and 2 Audio Speakers and Antenna
Two - 3 Pin 12V Power Outlet
12V Cigarette Lighter Style Power Outlet
ISO 11783 9-Pin in Cab Connector
ISO 11786 7-Pin in Cab Connector

WHEELS AND TIRES

Rear 460/85R38 R1W Single Wheels
Front 380/85R28 R1W Single Waffle Wheels

OTHER STANDARD FEATURES

Auto-Steer Ready
Lockable Tool Box
SMV Sign
Molded Rear Fenders
English Literature

MF6700 models can not be sold in Nebraska

(F.O.B. PORT OF ENTRY)

Order Code	Catalog Number	Description	Approx. Weight (lb.)	List Price

ONE *ORDER CODE* FROM EACH GROUP MUST BE SPECIFIED. (Unless In Base Option is desired)

BASE MACHINE

DYNA-6 EDITIONS

MF6715S~D6~EF~01	7295224	Massey 6715S Deluxe Tractor 115 PTO HP		139,284.00
MF6716S~D6~EF~01	7295225	Massey 6716S Deluxe Tractor 125 PTO HP		145,784.00

DYNA-VT EDITIONS

MF6714S~DV~EF~01	7295228	Massey 6714S Deluxe Tractor 105 PTO HP		140,673.00
MF6715S~DV~EF~01	7295229	Massey 6715S Deluxe Tractor 115 PTO HP		147,173.00
MF6716S~DV~EF~01	7295230	Massey 6716S Deluxe Tractor 125 PTO HP		153,673.00

TRANSMISSION OPTIONS FOR DYNA-6 EDITIONS

FOR 6715S

25-EA655	Base	6x4 Dyna-6 AUTODRIVE Transmission with . . . . . 24F/24R gears. 25 MPH (40 KPH)		**In Base**
25-NA032	7295235	6x4 Dyna-6 AUTODRIVE Transmission with . . . . . 24F/24R gears. 25 MPH (40 KPH) Includes: Suspended Power Front Axle		6,898.00
25-G1061	7295236	6X4 Dyna-6 AUTODRIVE Transmission with . . . . 24F/24R gears. 31 MPH (50 KPH) Includes: Suspended Power Front Axle Includes: High Pressure Brakes		9,881.00

FOR 6716S

25-EA655	Base	6x4 Dyna-6 AUTODRIVE Transmission with . . . . . 24F/24R gears. 25 MPH (40 KPH)		**In Base**
25-NA032	7295238	6x4 Dyna-6 AUTODRIVE Transmission with . . . . . 24F/24R gears. 25 MPH (40 KPH) Includes: Suspended Power Front Axle		6,898.00
25-G1061	7295239	6X4 Dyna-6 AUTODRIVE Transmission with . . . . 24F/24R gears. 31 MPH (50 KPH) Includes: Suspended Power Front Axle Includes: High Pressure Brakes		9,881.00

TRANSMISSION OPTIONS FOR DYNA-VT EDITIONS

FOR 6714S

25-EA621	Base	Dyna-VT Transmission - 25 MPH (40 KPH)		**In Base**
25-A7024	7295241	Dyna-VT Transmission - 31 MPH (50 KPH) . . . . . Includes: Suspended Power Front Axle		7,696.00

FOR 6715S AND 6716S

25-EA621	Base	Dyna-VT Transmission - 25 MPH (40 KPH)		**In Base**
25-A7024	7295242	Dyna-VT Transmission - 31 MPH (50 KPH) . . . . . Includes: Suspended Power Front Axle		7,696.00

BRAKES

270-EG018	7293472	High Pressure Brakes. . . . . Dyna-6 Models Only Requires: Front Axle Suspension if DP057 or DP100 hyd system		1,350.00

(F.O.B. PORT OF ENTRY)

Order Code	Catalog Number	Description	Approx. Weight (lb.)	List Price
AUXILIARY HYDRAULIC FLOW				
370-DP110	Base	29 gpm (110 L/min) Closed Center Load Sensing (CCLS)		**In Base**
370-DP190	7293697	50 gpm (190 L/min) Closed Center Load Sensing . . . (CCLS) System (Only Available for Dyna-VT Models)		1,016.00
AUXILIARY VALVE 1 & 2				
50-KX011	Base	Valves 1 and 2 Electric, Fingertip Controlled Spool Valves Fingertips Located in Armrest		**In Base**
50-KX012	7293530	Valves 1 & 2 Electric, with Multi-Function Joystick . . . on the Armrest (Required when choosing Factory Installed Loader Provisions (LL004 & LL005))		1,300.00
AUXILIARY VALVE 3 & 4				
55-MU012	Base	3rd and 4th Mechanically Controlled Valves, ... with levers located in Right Hand Console Kickout, Zero Leak, Flow Dividing, Float		**In Base**
55-MU003	7293532	3rd Valve only, Mechanically Controlled. . . . . with lever located in Right Hand Console Kickout, Zero Leak, Flow Dividing, Float		(1,136.00)
55-MU031	7293676	3rd and 4th Electric, Fingertip Controlled Valves . . . . with Fingertips located on Right Hand Console		1,358.00
POWER BEYOND				
90-GR010	Base	Power Beyond Couplers P/T/LS/D		**In Base**
90-GR000	7293665	Less Power Beyond		(716.00)
REAR AXLE				
DYNA-6				
60-EE402	Base	Short Bar Rear Axle, 80 in. (2028mm) Length, 3.23 in (82mm) Diameter		**In Base**
60-EE400	7293027	Flange Axle		(456.00)
60-EE404	7293026	Long Bar Rear Axle, 105 in (2672mm) Length, ... 3.23 in (82mm) Diameter (Requires Extremity Lights VE019)		925.00
DYNA-VT				
60-EE402	Base	Short Bar Rear Axle, 90 in. (2277mm) Long, ... 3.74 in. (95mm) Diameter		**In Base**
60-EE404	7293131	Long Bar Rear Axle, 113 in. (2869mm) Long, ... 3.74 in. (95mm) Diameter (Requires Extremity Lights VE019)		925.00
REAR 3-POINT HITCH				
95-GC009	Base	Category 2/3 Telescopic Ball End Links		**In Base**
95-GC022	7293572	Category 3 Hook End Links and Cat 2/3 Balls and Cones		No Charge
95-GC026	7293573	Category 3 Hook End Links, with Hydraulic Top Link . . and Cat 3/3 and Cat 2/3 Balls and Cones		891.00
REAR THREE POINT STABILIZERS				
165-YG001	Base	Variable Float Telescopic Stabilizers		Base
165-YG009	7293574	Automatic Stabilizers . . . . . (Requires GC022 or GC026 Lower Links)		338.00

(F.O.B. PORT OF ENTRY)

Order Code	Catalog Number	Description	Approx. Weight (lb.)	List Price
INSTRUMENT PANEL / CONTROL CENTER DISPLAY (CCD)				
LESS AUTO-STEERING READY				
175-BA003	7293556	Analog and Digital Instrument Panel with Radar . . . . (For Actual Ground Speed) and Slip Control. No Control Center Display (CCD).		(5,119.00)
175-BA005	7293557	Analog and Digital Instrument Panel w/o Radar or Slip . Control. No Control Center Display (CCD).		(5,927.00)
175-BA008	7293563	Analog and Digital Instrument Panel, Control Center . . Display (CCD) with Video Input, Electric Valve Control, Radar with Slip Control and ISOBUS.		(145.00)
AUTO-STEERING READY				
175-Base	Base*	Auto-Steer Ready, Analog and Digital Instrument Panel, Control Center Display (CCD) with Video Input, Electric Valve Control, Radar with Slip Control and ISOBUS. (Includes Roof Plate and Wiring Harness) *Order Auto-Guide™ 3000 TopDock Separately* *See Technology Section*		**In Base**
AUTO-STEERING COMPLETE				
175-BA021	7293677	Analog and Digital Instrument Panel, Control Center . . Display (CCD) with Video Input, Electric Valve Control, and ISOBUS. Radar with Slip Control. Auto-Guide™ 3000 Sub-Meter (WAAS and OmniStar VBS) Auto Steering System. (Includes Roof Plate and Wiring Harness) (Requires SpeedSteer) Auto-Guide™ 3000 uses the Control Center Display (CCD)		6,216.00
SPEEDSTEER				
185-AD004	Base	SpeedSteer Option		**In Base**
185-AD002	7293558	Less SpeedSteer . . . . . (Not Available with Base or BA021 Instrument Control Panel)		(900.00)

Order Code	Catalog Number	Description (F.O.B. PORT OF ENTRY)	Approx. Weight (lb.)	List Price

TIRES for 6715S Dyna-6

TIRE BRAND SELECTION

70-Blank	7294212	Factory Brand Choice	No Charge
70-T0001	7294195	Michelin Brand Required	1,615.00
70-T0007	7294197	Firestone Brand Required	1,205.00
70-T0010	7294198	Trelleborg Brand Required	1,205.00

FRONT AND REAR TIRES

FLANGE AXLE*

Rear: Single Pressed Steel Manual Adjust - Set of 2
Front: Waffle Wheel

75-W1297	7292864B1 7294786	Rear: 460/85R38 R1W (18.4R38) (MI, FI, TR) Front: 380/85R28 R1W (14.9R28) (MI, FI, TR)	(1,394.00)
75-W1309	7292865B1 7293763	Rear: 520/85R38 R1W (MI, FI, TR) Front: 420/85R28 R1W (MI, FI, TR)	(15.00)
75-W1662	7292861B1 7293760	Rear: 460/85R30 R1W (MI, FI) Front: 340/85R24 R1W (MI, FI)	(3,345.00)
75-W1663	7292862B1 7293761	Rear: 460/85R34 R1W (MI, FI, TR) Front: 340/85R28 R1W (MI, FI, TR)	(3,005.00)
75-W1664	7292863B1 7293761	Rear: 420/85R38 R1W (MI, FI, TR) Front: 340/85R28 R1W (MI, FI, TR)	(2,959.00)

Rear: Single Welded Pressed Steel - Set of 2
Front: Fixed Welded Steel Rim

75-W1476	7292871B1 7293767	Rear: 480/80R34 Industrial (Nokian Industrial) Front: 400/80R24 Industrial(Nokian Industrial)	4,440.00
75-W1478	7292873B1 7293769	Rear: 540/80R38 (Nokian Industrial) Front: 440/80R28 (Nokian Industrial)	8,927.00
75-W1286	7292858B1 7293757	Rear: 540/65R38 R1W (MI, FI, TR) Front: 440/65R28 R1W (MI, FI, TR)	(699.00)
75-W1511	7292872B1 7293768	Rear: 480/80R38 Industrial (Nokian Industrial) Front: 400/80R28 Industrial (Nokian Industrial)	6,503.00
75-W1257	7292859B1 7294785	Rear: 600/65R38 R1W (MI, FI, TR) Front: 480/65R28 R1W (MI, FI, TR)	(4.00)
75-W1258	7292860B1 7293759	Rear: 650/65R38 R1W (MI, FI, TR) Front: 540/65R28 R1W (MI, FI, TR)	2,937.00

Order Code	Catalog Number	Description (F.O.B. PORT OF ENTRY)	Approx. Weight (lb.)	List Price

TIRES for 6715S Dyna-6

FRONT AND REAR TIRES

BAR AXLES- SHORT AND LONG

Rear: Single Welded Pressed Steel - Set of 2
Front: Fixed Welded Steel Rim

75-W1667	7294903B4 7293767	Rear: 480/80R34 Industrial (Nokian Industrial) Front: 400/80R24 Industrial (Nokian Industrial)	5,000.00
75-W1670	7294899B4 7293757	Rear: 540/65R38 R1W (MI, FI, TR) Front: 440/65R28 R1W (MI, FI, TR)	(642.00)
75-W1572	7294894B4 7294785	Rear: 600/65R38 R1W (MI, FI, TR) Front: 480/65R28 R1W (MI, FI, TR)	(72.00)
75-W1673	7294905B4 7293769	Rear: 540/80R38 (Nokian Industrial) Front: 440/80R28 (Nokian Industrial)	8,936.00
75-W1262	7294895B4 7293759	Rear: 650/65R38 R1W (MI, FI, TR) Front: 540/65R28 R1W (MI, FI, TR)	2,948.00
75-W1672	7294904B4 7293768	Rear: 480/80R38 Industrial (Nokian Industrial) Front: 400/80R28 Industrial (Nokian Industrial)	6,421.00

BAR AXLES- SHORT AND LONG

Rear: Single Semi Dished Cast Centers- Set of 2
Front: Waffle Wheel

75-W1300	7294897B4 7294786	Rear: 460/85R38 R1W (18.4R38) (MI, FI, TR) Front: 380/85R28 R1W (14.9R28) (MI, FI, TR)	In Base
75-W1318	7294883B4 7293764	Rear: 380/90R46 R1W (MI) Front: 380/85R30 R1W (MI)	1,431.00
75-W1409	7294884B4 7293764	Rear: 420/80R46 R1W (MI) Front: 380/85R30 R1W (MI)	2,126.00
75-W1388	7294884B4 7293763	Rear: 420/80R46 R1W (MI) Front: 420/85R28 R1W (MI)	2,766.00
75-W1377	7294882B4 7293764	Rear: 480/80R42 R1W (MI, TR) Front: 380/85R30 R1W (MI, TR)	1,426.00
75-W1384	7294882B4 7293763	Rear: 480/80R42 R1W (MI, TR) Front: 420/85R28 R1W (MI, TR)	2,066.00
75-W1533	7294893B4 7293763	Rear: 520/85R38 R1W (MI, FI, TR) Front: 420/85R28 R1W (MI, FI, TR)	2,743.00

Order Code	Catalog Number	Description (F.O.B. PORT OF ENTRY)	Approx. Weight (lb.)	List Price

TIRES for 6715S Dyna-6

FRONT AND REAR TIRES

BAR AXLES- LONG

Rear: Dual Cast Inner / Steel Outer - Set of 4
Front: Waffle Wheel

75-W1374	7294898B4 7294786	Duals: 460/85R38 R1W (18.4R38) (MI, TR, FI) Front: 380/85R28 R1W (14.9R28) (MI, TR, FI)		7,174.00
75-W1379	7294887B4 7293764	Duals: 380/90R46 R1W (MI) Front: 380/85R30 R1W (MI)		8,877.00
75-W1410	7294888B4 7293764	Duals: 420/80R46 R1W (MI) Front: 380/85R30 R1W (MI)		9,839.00
75-W1471	7294888B4 7293763	Duals: 420/80R46 R1W (MI) Front: 420/85R28 R1W (MI)		10,479.00
75-W1380	7294886B4 7293764	Duals: 480/80R42 R1W (MI, TR) Front: 380/85R30 R1W (MI, TR)		8,147.00
75-W1386	7294886B4 7293763	Duals: 480/80R42 R1W (MI, TR) Front: 420/85R28 R1W (MI, TR)		8,787.00
75-W1658	7294896B4 7293763	Duals: 520/85R38 R1W (MI, TR, FI) Front: 420/85R28 R1W (MI, TR, FI)		9,117.00

BAR AXLES- LONG

Rear: Dual Cast Inner / Cast Outer - Set of 4
Front: Waffle Wheel

75-W1408	7294925B4 7293764	Duals: 380/90R46 R1W (MI) Front: 380/85R30 R1W (MI)		8,980.00
75-W1412	7294926B4 7293764	Duals: 420/80R46 R1W (MI) Front: 380/85R30 R1W (MI)		9,942.00
75-W1406	7294926B4 7293763	Duals: 420/80R46 R1W (MI) Front: 420/85R28 R1W (MI)		10,582.00
75-W1407	7294927B4 7293764	Duals: 480/80R42 R1W (MI, TR) Front: 380/85R30 R1W (MI, TR)		8,250.00
75-W1405	7294927B4 7293763	Duals: 480/80R42 R1W (MI, TR) Front: 420/85R28 R1W (MI, TR)		8,890.00

(F.O.B. PORT OF ENTRY)

Order Code	Catalog Number	Description	Approx. Weight (lb.)	List Price

TIRES for 6716S Dyna-6

TIRE BRAND SELECTION

70-Blank	7294212	Factory Brand Choice	No Charge
70-T0001	7294195	Michelin Brand Required	1,615.00
70-T0007	7294197	Firestone Brand Required	1,205.00
70-T0010	7294198	Trelleborg Brand Required	1,205.00

FRONT AND REAR TIRES

FLANGE AXLE*

Rear: Single Pressed Steel Manual Adjust - Set of 2
Front: Waffle Wheel

75-W1297	7292864B1 7293762B2	R: 460/85R38 R1W (18.4R38) (MI, FI, TR) F: 380/85R28 R1W (14.9R28) (MI, FI, TR)	(1,394.00)
75-W1309	7292865B1 7294762B2	R: 520/85R38 R1W (MI, FI, TR) F: 420/85R28 R1W (MI, FI, TR)	(15.00)

Rear: Single Welded Pressed Steel - Set of 2
Front: Fixed Welded Steel Rim

75-W1478	7292873B1 7294791B2	R: 540/80R38 (Nokian Industrial) F: 440/80R28 (Nokian Industrial)	8,927.00
75-W1286	7292858B1 7294784B2	R: 540/65R38 R1W (MI, FI, TR) F: 440/65R28 R1W (MI, FI, TR)	(699.00)
75-W1257	7292859B1 7293758B2	R: 600/65R38 R1W (MI, FI, TR) F: 480/65R28 R1W (MI, FI, TR)	(4.00)
75-W1258	7292860B1 7294783B2	R: 650/65R38 R1W (MI, FI, TR) F: 540/65R28 R1W (MI, FI, TR)	2,937.00

****Flange Axles are not compatible with Dyna-VT Transmissions***

BAR AXLES- SHORT AND LONG

Rear: Single Welded Pressed Steel - Set of 2
Front: Fixed Welded Steel Rim

75-W1670	7294899B4 7294784B2	R: 540/65R38 R1W (MI, FI, TR) F: 440/65R28 R1W (MI, FI, TR)	(642.00)
75-W1572	7294894B4 7293758B2	R: 600/65R38 R1W (MI, FI, TR) F: 480/65R28 R1W (MI, FI, TR)	(72.00)
75-W1673	7294905B4 7294791B2	R: 540/80R38 (Nokian Industrial) F: 440/80R28 (Nokian Industrial)	8,936.00
75-W1262	7294895B4 7294783B2	R: 650/65R38 R1W (MI, FI, TR) F: 540/65R28 R1W (MI, FI, TR)	2,948.00

(F.O.B. PORT OF ENTRY)

Order Code	Catalog Number	Description	Approx. Weight (lb.)	List Price

TIRES for 6716S Dyna-6

FRONT AND REAR TIRES - CONTINUED

BAR AXLES- SHORT AND LONG

Rear: Single Semi Dished Cast Centers- Set of 2
Front: Waffle Wheel

75-Base	7294897B4 7293762B2	Rear: 460/85R38 R1W (18.4R38) (MI, FI, TR) Front: 380/85R28 R1W (14.9R28) (MI, FI, TR)	**In Base**
75-W1533	7294893B4 7294762B2	Rear: 520/85R38 R1W (MI, FI, TR) Front: 420/85R28 R1W (MI, FI, TR)	2,743.00
75-W1377	7294882B4 7294765B2	Rear: 480/80R42 R1W (MI, TR) Front: 380/85R30 R1W (MI, TR)	1,426.00
75-W1620	7294882B4 7294769B2	Rear: 480/80R42 R1W (MI) Front: 320/85R34 R1W (MI)	2,175.00
75-W1548	7294883B4 7294769B2	Rear: 380/90R46 R1W (MI) Front: 320/85R34 R1W (MI)	2,180.00
75-W1388	7294884B4 7294762B2	Rear: 420/80R46 R1W (MI) Front: 420/85R28 R1W (MI)	2,766.00
75-W1409	7294884B4 7294765B2	Rear: 420/80R46 R1W (MI) Front: 380/85R30 R1W (MI)	2,126.00
75-W1624	7294884B4 7294769B2	Rear: 420/80R46 R1W (MI) Front: 320/85R34 R1W (MI)	2,875.00
75-W1318	7294883B4 7294765B2	Rear: 380/90R46 R1W (MI) Front: 380/85R30 R1W (MI)	1,431.00
75-W1394	7294885B4 7294769B2	Rear: 320/90R50 R1W (MI) Front: 320/85R34 R1W (MI)	1,594.00
75-W1384	7294882B4 7294762B2	Rear: 480/80R42 R1W (MI, TR) Front: 420/85R28 R1W (MI, TR)	2,066.00

(F.O.B. PORT OF ENTRY)

Order Code	Catalog Number	Description	Approx. Weight (lb.)	List Price

TIRES for 6716S Dyna-6

FRONT AND REAR TIRES - CONTINUED

BAR AXLES- LONG

Rear: Dual Cast Inner / Steel Outer - Set of 4
Front: Waffle Wheel

75-W1374	7294898B4 7293762B2	Duals: 460/85R38 R1W (18.4R38) (MI, TR, FI) Front: 380/85R28 R1W (14.9R28) (MI, TR, FI)	7,174.00
75-W1395	7294889B4 7294769B2	Duals: 320/90R50 R1W (MI) Front: 320/85R34 R1W (MI)	9,879.00
75-W1549	7294887B4 7294769B2	Duals: 380/90R46 R1W (MI) Front: 320/85R34 R1W (MI)	9,626.00
75-W1379	7294887B4 7294765B2	Duals: 380/90R46 R1W (MI) Front: 380/85R30 R1W (MI)	8,877.00
75-W1625	7294888B4 7294769B2	Duals: 420/80R46 R1W (MI) Front: 320/85R34 R1W (MI)	10,588.00
75-W1410	7294888B4 7294765B2	Duals: 420/80R46 R1W (MI) Front: 380/85R30 R1W (MI)	9,839.00
75-W1471	7294888B4 7294762B2	Duals: 420/80R46 R1W (MI) Front: 420/85R28 R1W (MI)	10,479.00
75-W1621	7294886B4 7294769B2	Duals: 480/80R42 R1W (MI) Front: 320/85R34 R1W (MI)	8,896.00
75-W1380	7294886B4 7294765B2	Duals: 480/80R42 R1W (MI, TR) Front: 380/85R30 R1W (MI, TR)	8,147.00
75-W1386	7294886B4 7294762B2	Duals: 480/80R42 R1W (MI, TR) Front: 420/85R28 R1W (MI, TR)	8,787.00
75-W1658	7294896B4 7294762B2	Duals: 520/85R38 R1W (MI, TR, FI) Front: 420/85R28 R1W (MI, TR, FI)	9,117.00

BAR AXLES- LONG

Rear: Dual Cast Inner / Cast Outer - Set of 4
Front: Waffle Wheel

75-W1408	7294925B4 7294765B2	Duals: 380/90R46 R1W (MI) Front: 380/85R30 R1W (MI)	8,980.00
75-W1412	7294926B4 7294765B2	Duals: 420/80R46 R1W (MI) Front: 380/85R30 R1W (MI)	9,942.00
75-W1406	7294926B4 7294762B2	Duals: 420/80R46 R1W (MI) Front: 420/85R28 R1W (MI)	10,582.00
75-W1407	7294927B4 7294765B2	Duals: 480/80R42 R1W (MI, TR) Front: 380/85R30 R1W (MI, TR)	8,250.00
75-W1405	7294927B4 7294762B2	Duals: 480/80R42 R1W (MI, TR) Front: 420/85R28 R1W (MI, TR)	8,890.00

(F.O.B. PORT OF ENTRY)

Order Code	Catalog Number	Description	Approx. Weight (lb.)	List Price

TIRES for 6714S Dyna-VT

FRONT AND REAR TIRES - CONTINUED

		BAR AXLES- SHORT AND LONG		
		Rear: Single Welded Pressed Steel - Set of 2		
		Front: Fixed Welded Steel Rim		
75-W1670	7294899B4 7293757	Rear: 540/65R38 R1W (MI, FI, TR) Front: 440/65R28 R1W (MI, FI, TR)		(642.00)
75-W1572	7294894B4 7294785	Rear: 600/65R38 R1W (MI, FI, TR) Front: 480/65R28 R1W (MI, FI, TR)		(72.00)
75-W1673	7294905B4 7293769	Rear: 540/80R38 (Nokian Industrial) Front: 440/80R28 (Nokian Industrial)		8,936.00
75-W1262	7294895B4 7293759	Rear: 650/65R38 R1W (MI, FI, TR) Front: 540/65R28 R1W (MI, FI, TR)		2,948.00
75-W1667	7294903B4 7293767	Rear: 480/80R34 Industrial (Nokian Industrial) Front: 400/80R24 Industrial (Nokian Industrial)		5,000.00
75-W1672	7294904B4 7293768	Rear: 480/80R38 Industrial (Nokian Industrial) Front: 400/80R28 Industrial (Nokian Industrial)		6,421.00
		Rear: Single Semi Dished Cast Centers- Set of 2		
		Front: Waffle Wheel		
75-Base	7294897B4 7294786	Rear: 460/85R38 R1W (18.4R38) (MI, FI, TR) Front: 380/85R28 R1W (14.9R28) (MI, FI, TR)		**In Base**
75-W1533	7294893B4 7293763	Rear: 520/85R38 R1W (MI, FI, TR) Front: 420/85R28 R1W (MI, FI, TR)		2,743.00
75-W1377	7294882B4 7293764	Rear: 480/80R42 R1W (MI, TR) Front: 380/85R30 R1W (MI, TR)		1,426.00
75-W1388	7294884B4 7293763	Rear: 420/80R46 R1W (MI) Front: 420/85R28 R1W (MI)		2,766.00
75-W1409	7294884B4 7293764	Rear: 420/80R46 R1W (MI) Front: 380/85R30 R1W (MI)		2,126.00
75-W1318	7294883B4 7293764	Rear: 380/90R46 R1W (MI) Front: 380/85R30 R1W (MI)		1,431.00
75-W1384	7294882B4 7293763	Rear: 480/80R42 R1W (MI, TR) Front: 420/85R28 R1W (MI, TR)		2,066.00
		BAR AXLES- LONG		
		Rear: Dual Cast Inner / Steel Outer - Set of 4		
		Front: Waffle Wheel		
75-W1374	7294898B4 7294786	Duals: 460/85R38 R1W (18.4R38) (MI, TR, FI) Front: 380/85R28 R1W (14.9R28) (MI, TR, FI)		7,174.00
75-W1379	7294887B4 7293764	Duals: 380/90R46 R1W (MI) Front: 380/85R30 R1W (MI)		8,877.00
75-W1410	7294888B4 7293764	Duals: 420/80R46 R1W (MI) Front: 380/85R30 R1W (MI)		9,839.00
75-W1471	7294888B4 7293763	Duals: 420/80R46 R1W (MI) Front: 420/85R28 R1W (MI)		10,479.00
75-W1380	7294886B4 7293764	Duals: 480/80R42 R1W (MI, TR) Front: 380/85R30 R1W (MI, TR)		8,147.00
75-W1386	7294886B4 7293763	Duals: 480/80R42 R1W (MI, TR, FI) Front: 420/85R28 R1W (MI, TR, FI)		8,787.00
75-W1658	7294896B4 7293763	Duals: 520/85R38 R1W (MI, FI, TR) Front: 420/85R28 R1W (MI, FI, TR)		9,117.00

(F.O.B. PORT OF ENTRY)

Order Code	Catalog Number	Description	Approx. Weight (lb.)	List Price

TIRES for 6715S & 6716S Dyna-VT

FRONT AND REAR TIRES - CONTINUED

BAR AXLES- SHORT AND LONG

Rear: Single Welded Pressed Steel - Set of 2
Front: Fixed Welded Steel Rim

75-W1670	7294899B4 7294784B2	Rear: 540/65R38 R1W (MI, FI, TR) . . . . . . Front: 440/65R28 R1W (MI, FI, TR)	(642.00)
75-W1572	7294894B4 7293758B2	Rear: 600/65R38 R1W (MI, FI, TR) . . . . . . Front: 480/65R28 R1W (MI, FI, TR)	(72.00)
75-W1673	7294905B4 7294791B2	Rear: 540/80R38 (Nokian Industrial) . . . . . . Front: 440/80R28 (Nokian Industrial)	8,936.00
75-W1262	7294895B4 7294783B2	Rear: 650/65R38 R1W (MI, FI, TR) . . . . . . Front: 540/65R28 R1W (MI, FI, TR)	2,948.00

Rear: Single Semi Dished Cast Centers- Set of 2
Front: Waffle Wheel

75-Base	7294897B4 7293762B2	Rear: 460/85R38 R1W (18.4R38) (MI, FI, TR) . . . . . Front: 380/85R28 R1W (14.9R28) (MI, FI, TR)	**In Base**
75-W1533	7294893B4 7294762B2	Rear: 520/85R38 R1W (MI, FI, TR) . . . . . . Front: 420/85R28 R1W (MI, FI, TR)	2,743.00
75-W1377	7294882B4 7294765B2	Rear: 480/80R42 R1W (MI, TR) . . . . . . Front: 380/85R30 R1W (MI, TR)	1,426.00
75-W1620	7294882B4 7294769B2	Rear: 480/80R42 R1W (MI) . . . . . . Front: 320/85R34 R1W (MI)	2,175.00
75-W1548	7294883B4 7294769B2	Rear: 380/90R46 R1W (MI) . . . . . . Front: 320/85R34 R1W (MI)	2,180.00
75-W1388	7294884B4 7294762B2	Rear: 420/80R46 R1W (MI) . . . . . . Front: 420/85R28 R1W (MI)	2,766.00
75-W1409	7294884B4 7294765B2	Rear: 420/80R46 R1W (MI) . . . . . . Front: 380/85R30 R1W (MI)	2,126.00
75-W1624	7294884B4 7294769B2	Rear: 420/80R46 R1W (MI) . . . . . . Front: 320/85R34 R1W (MI)	2,875.00
75-W1318	7294883B4 7294765B2	Rear: 380/90R46 R1W (MI) . . . . . . Front: 380/85R30 R1W (MI)	1,431.00
75-W1394	7294885B4 7294769B2	Rear: 320/90R50 R1W (MI) . . . . . . Front: 320/85R34 R1W (MI)	1,594.00
75-W1384	7294882B4 7294762B2	Rear: 480/80R42 R1W (MI, TR) . . . . . . Front: 420/85R28 R1W (MI, TR)	2,066.00

(F.O.B. PORT OF ENTRY)

TIRES for 6715S & 6716S Dyna-VT

FRONT AND REAR TIRES - CONTINUED

BAR AXLES- LONG

Rear: Dual Cast Inner / Steel Outer - Set of 4
Front: Waffle Wheel

Order Code	Catalog Number	Description	Approx. Weight (lb.)	List Price
75-W1374	7294898B4 7293762B2	Duals: 460/85R38 R1W (18.4R38) (MI, TR, FI) Front: 380/85R28 R1W (14.9R28) (MI, TR, FI)		7,174.00
75-W1395	7294889B4 7294769B2	Duals: 320/90R50 R1W (MI) Front: 320/85R34 R1W (MI)		9,879.00
75-W1549	7294887B4 7294769B2	Duals: 380/90R46 R1W (MI) Front: 320/85R34 R1W (MI)		9,626.00
75-W1379	7294887B4 7294765B2	Duals: 380/90R46 R1W (MI) Front: 380/85R30 R1W (MI)		8,877.00
75-W1625	7294888B4 7294769B2	Duals: 420/80R46 R1W (MI) Front: 320/85R34 R1W (MI)		10,588.00
75-W1410	7294888B4 7294765B2	Duals: 420/80R46 R1W (MI) Front: 380/85R30 R1W (MI)		9,839.00
75-W1471	7294888B4 7294762B2	Duals: 420/80R46 R1W (MI) Front: 420/85R28 R1W (MI)		10,479.00
75-W1621	7294886B4 7294769B2	Duals: 480/80R42 R1W (MI) Front: 320/85R34 R1W (MI)		8,896.00
75-W1380	7294886B4 7294765B2	Duals: 480/80R42 R1W (MI, TR) Front: 380/85R30 R1W (MI, TR)		8,147.00
75-W1386	7294886B4 7294762B2	Duals: 480/80R42 R1W (MI, TR) Front: 420/85R28 R1W (MI, TR)		8,787.00
75-W1658	7294896B4 7294762B2	Duals: 520/85R38 R1W (MI, TR, FI) Front: 420/85R28 R1W (MI, TR, FI)		9,117.00

MASSEY FERGUSON®

(F.O.B. PORT OF ENTRY)

Order Code	Catalog Number	Description	Approx. Weight (lb.)	List Price
PTO				
DYNA-6				
100-LC002	Base	Standard and Economy PTO Drive -2000 & 1550. . . . Engine RPM. Exchangeable Shaft PTO- 540 RPM 6 Spline + 1000 RPM 21 Spline		**In Base**
100-LC001	7293589	540 RPM 6 Spline & 1000 RPM 21 Spline . . . . . Exchangeable Shaft with No Economy		(917.00)
DYNA-VT				
100-Base	Base	540/540E/1000 RPM Flanged PTO with one 6 Spline Shaft and one 21 Spline Shaft, with In-Cab Controls		**In Base**
FRONT HITCH				
230-FA000	Base	Less Front Hitch		**In Base**
230-F1132	7293594	2800 kg (6172 lbs) Front Linkage with . . . . . 1 Set of Hydraulic Couplers		6,376.00
230-F1154	7295193	2800 kg (6172 lbs) Front Linkage with 1 Set of . . . . . Hydraulic Couplers with Belly Weight		7,231.00
230-F1155	7295194	2800 kg (6172 lbs) Front Linkage with 1 Set . . . . . of Hydraulic Couplers Cylinders with 1 Set of Hydraulic Couplers with Front PTO (21 Spline Anti-Clockwise)		13,240.00
230-F1143	7295195	2800 kg (6172 lbs) Front Linkage, Double Acting . . . Cylinders with 2 Sets of Front Hydraulic Couplers with Pressure Drain		4,953.00
230-F1156	7295196	2800 kg (6172 lbs) Front Linkage, Double Acting . . . Cylinders with 2 Sets of Front Hydraulic Couplers with Pressure Drain with Belly Weight		5,850.00
230-F1157	7295197	2800 kg (6172 lbs) Front Linkage, Double Acting . . . Cylinders with 2 Sets of Front Hydraulic Couplers with Pressure Drain with Front PTO (21 Spline Anti-Clockwise)		14,465.00
LOADER PROVISION				
350-LL000	Base	Less Loader Provisions.		**In Base**
350-LL004	7293484	Front Loader Provisions including Hydraulics, Subframe Requires: Valves 1 and 2 Electric with a Joystick (KX012) Not Compatible with 2 sets of Front Hydraulic Couplers (Front Hitch)		6,029.00
350-LL005	7295249	Front Loader Provision w/Live 3rd-SMS Loader Control Requires: Valves 1 and 2 Electric with a Joystick (KX012) & Less Front Hitch		7,500.00
CAB				
365-AF009	7294249	Radio, AM/FM, MP3 Compatible		(110.00)
125-AE042	7293546	Superluxe Grammar Seat		1,792.00
145-AL009	7293547	Telescopic Large Side Mirrors with Electric . . . . . De-Icing and Adjustment		467.00
120-AQ004	7293082	Automatic Climate Control		1,245.00
115-AM117	7295248	Mechanical Suspension - OptiRide		2,997.00
140-AI020	7293077	Standard Cab Roof with Roof Hatch		273.00
140-E1022	7293078	Visio roof . . . . . (Not Compatible with AL009 Mirrors or with Automatic Climate Control (AQ004) or with AutoGuide Ready Options (BA008/BA012). . .		1,586.00

(F.O.B. PORT OF ENTRY)

Order Code	Catalog Number	Description	Approx. Weight (lb.)	List Price
FRONT WEIGHTS				
285-YA112	7293487	121 lbs. (55 kg.) Front Weights, Set of 12 . . . . . with Hardware - total Weight 1,455 lbs. (660 kg.)		2,295.00
REAR WHEEL WEIGHTS				
325-RD040	7294192*	551 lbs. (250 kg.) Weights, Set of 2 . . . . . Mounts Externally to Wheel	1102	1,845.00
325-RD041	7294200*	551 lbs. (250 kg.) Weights, Set of 4 . . . . . Mounts Externally to Wheel	2204	3,689.00
		***NOT COMPATIBLE WITH 30" AND 34" RIMS**		
BELLY AND HITCH WEIGHTS				
245-YD001	7293374	1 Belly Weight - 584 lbs. (265 kg.) . . . . . (For use **WITHOUT** Front 3-Point Hitch)	584	1,490.00
345-YB003	7294119	1873 lbs. (850 kg.) Monoblock Weight	1984	3,440.00
345-YB004*	7294271	3,307 lbs (1500 kg) Monoblock Weight		5,677.00
		***NOT COMPATIBLE WITH FRONT WEIGHTS**		
ELECTRICAL				
215-CB002	Base	Engine Block Heater - 110 Volt		**In Base**
215-CB000	7293593	Less Engine Block Heater		(204.00)
ALTERNATOR				
220-CE019	Base	Twin 120 AMP Alternators.		**In Base**
220-CE020	7293561	175 AMP Alternator. . . . . (Not Available with ISOBUS.)		(380.00)
TELEMETRY				
160-BS003	7295247	Telemetry Ready (Antenna, Wiring and Box)		950.00
LIGHTING				
205-VF013	7293103	Dual Roof-Mounted Rotating Beacons, Left and Right . (Includes SAE SMV sign)	1102	522.00
195-VG078	7295103	2 Front and 2 Rear Xenon Work Lights.. . . . . Xenon Bulb for Brighter Lights and Longer Bulb Life		3,392.00
360-VE019	7293476	Extremity Lighting . . . . . (Required with Long Bar Axle)		756.00

(F.O.B. PORT OF ENTRY)

Order Code	Catalog Number	Description	Approx. Weight (lb.)	List Price

PIVOTING FRONT FENDERS

155-WE110	Base	Pivoting Front Fenders - Standard Width . . . . . Width depends on tire selection; see Chart Below		**In Base**
155-WE111	7293598	Pivoting Front Fenders - Wide Width . . . . . Width depends on tire selection; see Chart Below		120.00

Fender Size		
Standard	**Wide**	**Tire Sizes**
12.6" (320 mm)	13.9" (355 mm)	320/85R34 (12.4R34)
13.9" (355 mm)	14.9" (380 mm)	340/85R24 (13.6R24) 340/85R28 (13.6R28)
14.9" (380 mm)	16.1" (410 mm)	380/85R28 (14.9R28) 380/85R30 (14.9R30) 400/80R24 400/80R28
16.1" (410 mm)	18.5" (470 mm)	420/85R28 (16.9R28) 440/65R28
18.5" (470 mm)	20.4" (520 mm)	440/80R28 480/65R28
20.4" (520 mm)	24.4" (620 mm)	540/65R28

REAR FENDERS

255-WD012	Base	Rear Fenders without Extensions, 78.74"(2.00 M) . . .	**In Base**
255-WD017	7293107	Wide Fender -90.55" (2.3 M) with Rear Extension . . .	1,323.00
255-WD020	7293109	Extra Wide Fender -100.4" (2.55 M) . . . . . with Rear Extension	1,464.00

(F.O.B. PORT OF ENTRY)

Order Code	Catalog Number	Description	Approx. Weight (lb.)	List Price
MISCELLANEOUS				
35-EN002	7293402	14:1 Super Creeper Reduction Gear . . . . . (**Not Compatible with Dyna-VT)**		2,907.00
250-GS001	7293100	Hydraulic Trailer Brakes		817.00
250-GS062	7293551	Pneumatic Trailer Brakes		6,767.00
250-GS067	7293552	Pneumatic & Hydraulic Trailer Brakes.		7,508.00
225-LQ001	7293553	Water Separator (Fuel Filter)		466.00
275-TC005	7294210	French Language OIB.		No Charge
275-TC011	7294211	Spanish Language OIB		No Charge
DEALER INSTALLED OPTIONS				
FRONT WEIGHTS				
	5020186M	8 x 55 KG (121 lbs.) Front Weights	968	1,545.00
	5020187M	10 x 55 KG (121 lbs.) Front Weights	1210	1,932.00
	5020188M	12 x 55 KG (121 lbs.) Front Weights	1452	2,295.00
	5020189M	14 x 55 KG (121 lbs.) Front Weights	1694	2,678.00

6700S PREMIUM EDITION

MASSEY FERGUSON®

(F.O.B. PORT OF ENTRY)

PREMIUM EDITION FEATURES

ENGINE

6714S/6715S/6716S

AGCO POWER™ 4.9L (299 cu in.) 4 Cylinder, Tier 4f Compliant
- SCR Technology
- Air-to-Air Aftercooled, Common Rail Injection, Turbocharged

Electronic Engine Management (EEM) with Dual ERPM Settings
Electronic Controlled Viscous Fan Drive
Dual Element Dry Type Air Cleaner
Vertical Exhaust at Right Front Cab Post
Cooling System: Antifreeze to Minus 30°F(-34°C)
Fuel Tank Capacity: 59 Gal (225L)
DEF Tank Capacity: 10.8 Gal (41L)

POWERTRAIN

6714S/6715S/6716S: DYNA-VT
- Continuously Variable Transmission, 50 KPH
- Dynamic Tractor Management (DTM) with Two Programmable Cruise Speeds
- Short Bar Rear Axle, 90 In. (2277mm) Long, 3.74 in. (95mm) Diameter

6715S/6716S: DYNA-6 TRANSMISSION
- 24F/24R Semi-Powershift, 4 Ranges with 6 Powershifts per Range, 50 KPH
- Dynamic Tractor Management (DTM) with Two Programmable Cruise Speeds
- Short Bar Rear Axle, 80 in. (2028mm) Long, 3.23 in. (82mm) Diameter

Multi-Disc Wet Brakes
Power Differential Lock
Independent PTO:

DYNA-VT:

540/540E/1000 RPM Flanged Shaft, 540 with 6 Spline and 1000 with 21 Spline

DYNA-6: 540/540E/1000/1000E Exchangeable Shaft, 540 with 6 Spline and 1000 with 21 Spline with Electric Control

Rear Fender Mounted PTO Shut-Off

FRONT WHEEL ASSIST AXLE

Pivoting Front Fenders
Power Front Axle (PFA)
- 8 Bolt Pattern: 6715S Dyna-6 & 6714S Dyna-VT
- 10 Bolt Pattern: 6716S Dyna-6 and 6715S/6716S Dyna-VT

Suspended Front Axle
Shielded Center Drive Line with Electro-Hydraulic Control & Front Wheel Drive Differential Lock
55 Degree Steering Angle

HYDRAULICS

Power Beyond Couplers
Closed Center Load Sensing 29 gpm (110 L/Min) Pump
2900 PSI (200 Bar) Maximum Pressure
4 Electric Valves - Fingertip Controlled, 2 Located on Armrest, 2 Located Right Hand Console
Fast Steering

WHEELS AND TIRES

Rear 460/85R38 R1W Single Wheels
Front 380/85R28 R1W Single Waffle Wheels

HITCH

3-Point Hitch: Category 2/3 Linkage Ball Ends
- 8,520 lbs lift capacity @ 24"
- 11,400 lbs lift capacity @ 24" for Dyna-VT
- Active Transport Control
- Lower Link Sensing
- Electronic Draft Control, Electronic Height Control, & Rate of Drop
- Variable Float Telescopic Stabilizers

Left & Right Side External 3 Point Control with one Spool Control Valve
Drawbar: Category 2, Clevis and Drop Pin

ELECTRICAL SYSTEM

2 – 120 Amp Alternators
2 – 12V Batteries, 600 CCA Each (SAE)
7 Pin ASAE Rear Trailer Electrical Outlet
Electrical Isolator Switch and Jumpstart Point
110V Engine Block Heater
Ignition with Neutral Start and Key Shutoff

LIGHTING

8 Front Hood Mounted Lights
Four Front Single Bulb Worklights
Two Rear Double Bulb Worklights
Two Field Lights on Hand Rails and Rear Fenders with Tail Lights, Flashing Warning Lights, and Turn Signals

INSTRUMENTS

Control Center Display (CCD)
- Video Input
- Electric Valve Control
- ISOBUS Compliant

Radar with Slip Control
Tachometer: Digital and Analog
PTO Speed: Digital
Ground Speed Display: Digital
Fuel Level, DEF Level, and Coolant Temp Gauges
Warning/Information Lights

OPERATOR AREA

6 Post Cab
OptiRide Cab Suspension
Transmission Control Multicontroller on Armrest
Adjustable Steering Column
Front Sun Visor
Auto Air Conditioning and Climate Control
Air Suspended Seat - Automatic Adjustment
Front and Rear Windshield Wiper/Washer
Dual Large Telescoping Outside Rear View Mirrors with De-Icing.
Single Inside Rear View Mirror
Radio with AM/FM/CD/MP3/Bluetooth and 2 Audio Speakers and Antenna
Two - 3 Pin 12V Power Outlet
12V Cigarette Lighter Style Power Outlet
ISO 11783 9-Pin in Cab Connector
ISO 11786 7-Pin in Cab Connector

OTHER STANDARD FEATURES

Auto-Steer Complete: Auto-Guide™ 3000 Sub-Meter (WAAS and OmniStar VBS)
Auto Steering System using the Control Center Display (CCD)
Lockable Tool Box
SMV Sign
Molded Rear Fenders
English Literature

MF6700 models can not be sold in Nebraska

(F.O.B. PORT OF ENTRY)

Order Code	Catalog Number	Description	Approx. Weight (lb.)	List Price

ONE *ORDER CODE* FROM EACH GROUP MUST BE SPECIFIED. (Unless In Base Option is desired)

BASE MACHINE

DYNA-6 EDITIONS

MF6715S~D6~EX~02	7295226	Massey 6715S Premium Tractor 115 PTO HP	159,102.00
MF6716S~D6~EX~02	7295227	Massey 6716S Premium Tractor 125 PTO HP	165,602.00

DYNA-VT EDITIONS

MF6714S~DV~EX~02	7295231	Massey 6714S Premium Tractor 105 PTO HP	158,858.00
MF6715S~DV~EX~02	7295232	Massey 6715S Premium Tractor 115 PTO HP	165,358.00
MF6716S~DV~EX~02	7295233	Massey 6716S Premium Tractor 125 PTO HP	171,858.00

TRANSMISSION OPTIONS FOR DYNA-6 EDITIONS

6715S ONLY

25-NA032	Base	6X4 Dyna-6 AUTODRIVE Transmission with . . . . 24F/24R gears. 31 MPH (50 KPH) . Includes: High Pressure Brakes & Suspended Power Front Axle	**In Base**
25-G1064	7295237	6x4 Dyna-6 AUTODRIVE Transmission with . . . . . 24F/24R gears. 25 MPH (40 KPH) Includes: Suspended Power Front Axle	(2,983.00)

6716S ONLY

25-NA032	Base	6X4 Dyna-6 AUTODRIVE Transmission with . . . . 24F/24R gears. 31 MPH (50 KPH) . Includes: High Pressure Brakes & Suspended Power Front Axle	**In Base**
25-G1064	7295240	6x4 Dyna-6 AUTODRIVE Transmission with . . . . . 24F/24R gears. 25 MPH (40 KPH) Includes: Suspended Power Front Axle	(2,983.00)

TRANSMISSION OPTIONS FOR DYNA-VT EDITIONS

25-NA032	Base	Dyna-VT Transmission - 31 MPH (50 KPH)	**In Base**

BRAKES

270-EG018	7293472	High Pressure Brakes. . . . . Dyna-6 Models Only	1,350.00

(F.O.B. PORT OF ENTRY)

Order Code	Catalog Number	Description	Approx. Weight (lb.)	List Price
AUXILIARY HYDRAULIC FLOW				
370-DP110	Base	29 gpm (110 L/min) Closed Center Load Sensing (CCLS)		**In Base**
370-DP190	7293697	50 gpm (190 L/min) Closed Center Load Sensing . . . (CCLS) System (Only Available for Dyna-VT Models)		1,016.00
AUXILIARY VALVE 1 & 2				
50-KX011	Base	Valves 1 and 2 Electric, Fingertip Controlled Spool Valves Fingertips Located in Armrest		**In Base**
50-KX012	7293530	Valves 1 & 2 Electric, with Multi-Function Joystick . . . on the Armrest (Required when choosing Factory Installed Loader Provisions (LL004 & LL005))		1,300.00
AUXILIARY VALVE 3 & 4 & 5				
55-MU031	Base	3rd and 4th Electric, Fingertip Controlled Valves . . . . with Fingertips located on Right Hand Console		**In Base**
55-MU041	7293534	3rd, 4th & 5th Fingertip Controlled Electric Spool Valve. (Fingertips located on Right Hand Console) **DYNA-VT MODELS**		1,848.00
POWER BEYOND				
90-GR010	Base	Power Beyond Couplers P/T/LS/D		**In Base**
90-GR000	7293665	Less Power Beyond		(716.00)
REAR AXLE				
DYNA-6				
60-EE402	Base	Short Bar Rear Axle, 80 in. (2028mm) Long, ... 3.23 in (82mm) Diameter		**In Base**
60-EE400	7293027	Flange Axle		(456.00)
60-EE404	7293026	Long Bar Rear Axle, 3.23 in (82mm) Diameter, ... 105 in (2672mm) Long (Requires Extremity Lights VE019)		925.00
DYNA-VT				
60-EE402	Base	Short Bar Rear Axle, 90 in. (2277mm) Long, ... 3.74 in. (95mm) Diameter		**In Base**
60-EE404	7293131	Long Bar Rear Axle, 113 in. (2869mm) Long, ... 3.74 in. (95mm) Diameter (Requires Extremity Lights VE019)		925.00
REAR 3-POINT HITCH				
95-GC009	Base	Category 2/3 Telescopic Ball End Links		**In Base**
95-GC022	7293572	Category 3 Hook End Links and Cat 2/3 Balls and Cones		No Charge
95-GC026	7293573	Category 3 Hook End Links, with Hydraulic Top Link . . and Cat 3/3 and Cat 2/3 Balls and Cones.		891.00
REAR THREE POINT STABILIZERS				
165-Base	Base	Variable Float Telescopic Stabilizers		**In Base**
165-YG009	7293574	Automatic Stabilizers . . . . . (Requires GC022 or GC026 Lower Links)		338.00

(F.O.B. PORT OF ENTRY)

Order Code	Catalog Number	Description	Approx. Weight (lb.)	List Price

INSTRUMENT PANEL / CONTROL CENTER DISPLAY (CCD)

LESS AUTO-STEERING READY

175-BA008	7293679	Analog and Digital Instrument Panel, Control Center . . Display (CCD) with Video Input, Electric Valve Control, Radar with Slip Control and ISOBUS.	(4,973.00)

AUTO-STEERING READY

175-BA012	7293678	Auto-Steer Ready, Analog and Digital Instrument Panel, Control Center Display (CCD) with Video Input, Electric Valve Control, Radar with Slip Control and ISOBUS. (Includes Roof Plate and Wiring Harness) *Order Auto-Guide™ 3000 TopDock Separately* *See Technology Section*	(4,828.00)

Note: The Control Center Display (CCD) is required to utilize Auto-Guide™ 3000.

AUTO-STEERING COMPLETE

175-BA021	Base	Analog and Digital Instrument Panel, Control Center . . Display (CCD) with Video Input, Electric Valve Control, and ISOBUS. Radar with Slip Control. Auto-Guide™ 3000 Sub-Meter (WAAS and OmniStar VBS) Auto Steering System. (Includes Roof Plate and Wiring Harness) (Requires SpeedSteer) Auto-Guide™ 3000 uses the Control Center Display (CCD).	**In Base**

SPEEDSTEER

185-AD004	Base	SpeedSteer Option	**In Base**
185-AD002	7293558	Less SpeedSteer Option . . . . . Not Available with BA012 and Base Instrument Control Panel	(900.00)

Order Code	Catalog Number	Description (F.O.B. PORT OF ENTRY)	Approx. Weight (lb.)	List Price

TIRES for 6715S Dyna-6

TIRE BRAND SELECTION

70-Blank	7294212	Factory Brand Choice	No Charge
70-T0001	7294195	Michelin Brand Required	1,615.00
70-T0007	7294197	Firestone Brand Required	1,205.00
70-T0010	7294198	Trelleborg Brand Required	1,205.00

FRONT AND REAR TIRES

FLANGE AXLE

Rear: Single Pressed Steel Manual Adjust - Set of 2
Front: Waffle Wheel

75-W1297	7292864B1 7294786	Rear: 460/85R38 R1W (18.4R38) (MI, FI, TR) Front: 380/85R28 R1W (14.9R28) (MI, FI, TR)	(1,394.00)
75-W1309	7292865B1 7293763	Rear: 520/85R38 R1W (MI, FI, TR) Front: 420/85R28 R1W (MI, FI, TR)	(15.00)
75-W1662	7292861B1 7293760	Rear: 460/85R30 R1W (MI, FI) Front: 340/85R24 R1W (MI, FI)	(3,345.00)
75-W1663	7292862B1 7293761	Rear: 460/85R34 R1W (MI, FI, TR) Front: 340/85R28 R1W (MI, FI, TR)	(3,005.00)
75-W1664	7292863B1 7293761	Rear: 420/85R38 R1W (MI, FI, TR) Front: 340/85R28 R1W (MI, FI, TR)	(2,959.00)

Rear: Single Welded Pressed Steel - Set of 2
Front: Fixed Welded Steel Rim

75-W1476	7292871B1 7293767	Rear: 480/80R34 Industrial (Nokian Industrial) Front: 400/80R24 Industrial(Nokian Industrial)	4,440.00
75-W1478	7292873B1 7293769	Rear: 540/80R38 (Nokian Industrial) Front: 440/80R28 (Nokian Industrial)	8,927.00
75-W1286	7292858B1 7293757	Rear: 540/65R38 R1W (MI, FI, TR) Front: 440/65R28 R1W (MI, FI, TR)	(699.00)
75-W1511	7292872B1 7293768	Rear: 480/80R38 Industrial (Nokian Industrial) Front: 400/80R28 Industrial (Nokian Industrial)	6,503.00
75-W1257	7292859B1 7294785	Rear: 600/65R38 R1W (MI, FI, TR) Front: 480/65R28 R1W (MI, FI, TR)	(4.00)
75-W1258	7292860B1 7293759	Rear: 650/65R38 R1W (MI, FI, TR) Front: 540/65R28 R1W (MI, FI, TR)	2,937.00

Order Code	Catalog Number	Description (F.O.B. PORT OF ENTRY)	Approx. Weight (lb.)	List Price

TIRES for 6715S Dyna-6

FRONT AND REAR TIRES

BAR AXLES- SHORT AND LONG

Rear: Single Welded Pressed Steel - Set of 2
Front: Fixed Welded Steel Rim

75-W1667	7294903B4 7293767	Rear: 480/80R34 Industrial (Nokian Industrial) . . . . . Front: 400/80R24 Industrial (Nokian Industrial)	5,000.00
75-W1670	7294899B4 7293757	Rear: 540/65R38 R1W (MI, FI, TR) . . . . . . Front: 440/65R28 R1W (MI, FI, TR)	(642.00)
75-W1572	7294894B4 7294785	Rear: 600/65R38 R1W (MI, FI, TR) . . . . . . Front: 480/65R28 R1W (MI, FI, TR)	(72.00)
75-W1673	7294905B4 7293769	Rear: 540/80R38 (Nokian Industrial) . . . . . . Front: 440/80R28 (Nokian Industrial)	8,936.00
75-W1262	7294895B4 7293759	Rear: 650/65R38 R1W (MI, FI, TR) . . . . . . Front: 540/65R28 R1W (MI, FI, TR)	2,948.00
75-W1672	7294904B4 7293768	Rear: 480/80R38 Industrial (Nokian Industrial) . . . . . Front: 400/80R28 Industrial (Nokian Industrial)	6,421.00

BAR AXLES- SHORT AND LONG

Rear: Single Semi Dished Cast Centers- Set of 2
Front: Waffle Wheel

75-W1300	7294897B4 7294786	Rear: 460/85R38 R1W (18.4R38) (MI, FI, TR) . . . . . Front: 380/85R28 R1W (14.9R28) (MI, FI, TR)	In Base
75-W1318	7294883B4 7293764	Rear: 380/90R46 R1W (MI) . . . . . . Front: 380/85R30 R1W (MI)	1,431.00
75-W1409	7294884B4 7293764	Rear: 420/80R46 R1W (MI) . . . . . . Front: 380/85R30 R1W (MI)	2,126.00
75-W1388	7294884B4 7293763	Rear: 420/80R46 R1W (MI) . . . . . . Front: 420/85R28 R1W (MI)	2,766.00
75-W1377	7294882B4 7293764	Rear: 480/80R42 R1W (MI, TR) . . . . . . Front: 380/85R30 R1W (MI, TR)	1,426.00
75-W1384	7294882B4 7293763	Rear: 480/80R42 R1W (MI, TR) . . . . . . Front: 420/85R28 R1W (MI, TR)	2,066.00
75-W1533	7294893B4 7293763	Rear: 520/85R38 R1W (MI, FI, TR) . . . . . . Front: 420/85R28 R1W (MI, FI, TR)	2,743.00

Order Code	Catalog Number	Description (F.O.B. PORT OF ENTRY)	Approx. Weight (lb.)	List Price

TIRES for 6715S Dyna-6

FRONT AND REAR TIRES

		BAR AXLES- LONG		
		Rear: Dual Cast Inner / Steel Outer - Set of 4		
		Front: Waffle Wheel		
75-W1374	7294898B4	Duals: 460/85R38 R1W (18.4R38) (MI, TR, FI)		7,174.00
	7294786	Front: 380/85R28 R1W (14.9R28) (MI, TR, FI)		
75-W1379	7294887B4	Duals: 380/90R46 R1W (MI)		8,877.00
	7293764	Front: 380/85R30 R1W (MI)		
75-W1410	7294888B4	Duals: 420/80R46 R1W (MI)		9,839.00
	7293764	Front: 380/85R30 R1W (MI)		
75-W1471	7294888B4	Duals: 420/80R46 R1W (MI)		10,479.00
	7293763	Front: 420/85R28 R1W (MI)		
75-W1380	7294886B4	Duals: 480/80R42 R1W (MI, TR)		8,147.00
	7293764	Front: 380/85R30 R1W (MI, TR)		
75-W1386	7294886B4	Duals: 480/80R42 R1W (MI, TR)		8,787.00
	7293763	Front: 420/85R28 R1W (MI, TR)		
75-W1658	7294896B4	Duals: 520/85R38 R1W (MI, TR, FI)		9,117.00
	7293763	Front: 420/85R28 R1W (MI, TR, FI)		
		BAR AXLES- LONG		
		Rear: Dual Cast Inner / Cast Outer - Set of 4		
		Front: Waffle Wheel		
75-W1408	7294925B4	Duals: 380/90R46 R1W (MI)		8,980.00
	7293764	Front: 380/85R30 R1W (MI)		
75-W1412	7294926B4	Duals: 420/80R46 R1W (MI)		9,942.00
	7293764	Front: 380/85R30 R1W (MI)		
75-W1406	7294926B4	Duals: 420/80R46 R1W (MI)		10,582.00
	7293763	Front: 420/85R28 R1W (MI)		
75-W1407	7294927B4	Duals: 480/80R42 R1W (MI, TR)		8,250.00
	7293764	Front: 380/85R30 R1W (MI, TR)		
75-W1405	7294927B4	Duals: 480/80R42 R1W (MI, TR)		8,890.00
	7293763	Front: 420/85R28 R1W (MI, TR)		

(F.O.B. PORT OF ENTRY)

TIRES for 6716S Dyna-6

TIRE BRAND SELECTION

Order Code	Catalog Number	Description	Approx. Weight (lb.)	List Price
70-Blank	7294212	Factory Brand Choice		No Charge
70-T0001	7294195	Michelin Brand Required		1,615.00
70-T0007	7294197	Firestone Brand Required		1,205.00
70-T0010	7294198	Trelleborg Brand Required		1,205.00

FRONT AND REAR TIRES

FLANGE AXLE*

Rear: Single Pressed Steel Manual Adjust - Set of 2
Front: Waffle Wheel

75-W1297	7292864B1 7293762B2	R: 460/85R38 R1W (18.4R38) (MI, FI, TR) F: 380/85R28 R1W (14.9R28) (MI, FI, TR)		(1,394.00)
75-W1309	7292865B1 7294762B2	R: 520/85R38 R1W (MI, FI, TR) F: 420/85R28 R1W (MI, FI, TR)		(15.00)

Rear: Single Welded Pressed Steel - Set of 2
Front: Fixed Welded Steel Rim

75-W1478	7292873B1 7294791B2	R: 540/80R38 (Nokian Industrial) F: 440/80R28 (Nokian Industrial)		8,927.00
75-W1286	7292858B1 7294784B2	R: 540/65R38 R1W (MI, FI, TR) F: 440/65R28 R1W (MI, FI, TR)		(699.00)
75-W1257	7292859B1 7293758B2	R: 600/65R38 R1W (MI, FI, TR) F: 480/65R28 R1W (MI, FI, TR)		(4.00)
75-W1258	7292860B1 7294783B2	R: 650/65R38 R1W (MI, FI, TR) F: 540/65R28 R1W (MI, FI, TR)		2,937.00

****Flange Axles are not compatible with Dyna-VT Transmissions***

BAR AXLES- SHORT AND LONG

Rear: Single Welded Pressed Steel - Set of 2
Front: Fixed Welded Steel Rim

75-W1670	7294899B4 7294784B2	R: 540/65R38 R1W (MI, FI, TR) F: 440/65R28 R1W (MI, FI, TR)		(642.00)
75-W1572	7294894B4 7293758B2	R: 600/65R38 R1W (MI, FI, TR) F: 480/65R28 R1W (MI, FI, TR)		(72.00)
75-W1673	7294905B4 7294791B2	R: 540/80R38 (Nokian Industrial) F: 440/80R28 (Nokian Industrial)		8,936.00
75-W1262	7294895B4 7294783B2	R: 650/65R38 R1W (MI, FI, TR) F: 540/65R28 R1W (MI, FI, TR)		2,948.00

(F.O.B. PORT OF ENTRY)

Order Code	Catalog Number	Description	Approx. Weight (lb.)	List Price

TIRES for 6716S Dyna-6

FRONT AND REAR TIRES - CONTINUED

BAR AXLES- SHORT AND LONG

Rear: Single Semi Dished Cast Centers- Set of 2
Front: Waffle Wheel

75-Base	7294897B4 7293762B2	Rear: 460/85R38 R1W (18.4R38) (MI, FI, TR) Front: 380/85R28 R1W (14.9R28) (MI, FI, TR)		**In Base**
75-W1533	7294893B4 7294762B2	Rear: 520/85R38 R1W (MI, FI, TR) Front: 420/85R28 R1W (MI, FI, TR)		2,743.00
75-W1377	7294882B4 7294765B2	Rear: 480/80R42 R1W (MI, TR) Front: 380/85R30 R1W (MI, TR)		1,426.00
75-W1620	7294882B4 7294769B2	Rear: 480/80R42 R1W (MI) Front: 320/85R34 R1W (MI)		2,175.00
75-W1548	7294883B4 7294769B2	Rear: 380/90R46 R1W (MI) Front: 320/85R34 R1W (MI)		2,180.00
75-W1388	7294884B4 7294762B2	Rear: 420/80R46 R1W (MI) Front: 420/85R28 R1W (MI)		2,766.00
75-W1409	7294884B4 7294765B2	Rear: 420/80R46 R1W (MI) Front: 380/85R30 R1W (MI)		2,126.00
75-W1624	7294884B4 7294769B2	Rear: 420/80R46 R1W (MI) Front: 320/85R34 R1W (MI)		2,875.00
75-W1318	7294883B4 7294765B2	Rear: 380/90R46 R1W (MI) Front: 380/85R30 R1W (MI)		1,431.00
75-W1394	7294885B4 7294769B2	Rear: 320/90R50 R1W (MI) Front: 320/85R34 R1W (MI)		1,594.00
75-W1384	7294882B4 7294762B2	Rear: 480/80R42 R1W (MI, TR) Front: 420/85R28 R1W (MI, TR)		2,066.00

(F.O.B. PORT OF ENTRY)

TIRES for 6716S Dyna-6

FRONT AND REAR TIRES - CONTINUED

Order Code	Catalog Number	Description	Approx. Weight (lb.)	List Price
		BAR AXLES- LONG		
		Rear: Dual Cast Inner / Steel Outer - Set of 4		
		Front: Waffle Wheel		
75-W1374	7294898B4	Duals: 460/85R38 R1W (18.4R38) (MI, TR, FI)		7,174.00
	7293762B2	Front: 380/85R28 R1W (14.9R28) (MI, TR, FI)		
75-W1395	7294889B4	Duals: 320/90R50 R1W (MI)		9,879.00
	7294769B2	Front: 320/85R34 R1W (MI)		
75-W1549	7294887B4	Duals: 380/90R46 R1W (MI)		9,626.00
	7294769B2	Front: 320/85R34 R1W (MI)		
75-W1379	7294887B4	Duals: 380/90R46 R1W (MI)		8,877.00
	7294765B2	Front: 380/85R30 R1W (MI)		
75-W1625	7294888B4	Duals: 420/80R46 R1W (MI)		10,588.00
	7294769B2	Front: 320/85R34 R1W (MI)		
75-W1410	7294888B4	Duals: 420/80R46 R1W (MI)		9,839.00
	7294765B2	Front: 380/85R30 R1W (MI)		
75-W1471	7294888B4	Duals: 420/80R46 R1W (MI)		10,479.00
	7294762B2	Front: 420/85R28 R1W (MI)		
75-W1621	7294886B4	Duals: 480/80R42 R1W (MI)		8,896.00
	7294769B2	Front: 320/85R34 R1W (MI)		
75-W1380	7294886B4	Duals: 480/80R42 R1W (MI, TR)		8,147.00
	7294765B2	Front: 380/85R30 R1W (MI, TR)		
75-W1386	7294886B4	Duals: 480/80R42 R1W (MI, TR)		8,787.00
	7294762B2	Front: 420/85R28 R1W (MI, TR)		
75-W1658	7294896B4	Duals: 520/85R38 R1W (MI, TR, FI)		9,117.00
	7294762B2	Front: 420/85R28 R1W (MI, TR, FI)		
		BAR AXLES- LONG		
		Rear: Dual Cast Inner / Cast Outer - Set of 4		
		Front: Waffle Wheel		
75-W1408	7294925B4	Duals: 380/90R46 R1W (MI)		8,980.00
	7294765B2	Front: 380/85R30 R1W (MI)		
75-W1412	7294926B4	Duals: 420/80R46 R1W (MI)		9,942.00
	7294765B2	Front: 380/85R30 R1W (MI)		
75-W1406	7294926B4	Duals: 420/80R46 R1W (MI)		10,582.00
	7294762B2	Front: 420/85R28 R1W (MI)		
75-W1407	7294927B4	Duals: 480/80R42 R1W (MI, TR)		8,250.00
	7294765B2	Front: 380/85R30 R1W (MI, TR)		
75-W1405	7294927B4	Duals: 480/80R42 R1W (MI, TR)		8,890.00
	7294762B2	Front: 420/85R28 R1W (MI, TR)		

(F.O.B. PORT OF ENTRY)

Order Code	Catalog Number	Description	Approx. Weight (lb.)	List Price

TIRES for 6714S Dyna-VT

FRONT AND REAR TIRES - CONTINUED

		BAR AXLES- SHORT AND LONG		
		Rear: Single Welded Pressed Steel - Set of 2		
		Front: Fixed Welded Steel Rim		
75-W1670	7294899B4 7293757	Rear: 540/65R38 R1W (MI, FI, TR) Front: 440/65R28 R1W (MI, FI, TR)		(642.00)
75-W1572	7294894B4 7294785	Rear: 600/65R38 R1W (MI, FI, TR) Front: 480/65R28 R1W (MI, FI, TR)		(72.00)
75-W1673	7294905B4 7293769	Rear: 540/80R38 (Nokian Industrial) Front: 440/80R28 (Nokian Industrial)		8,936.00
75-W1262	7294895B4 7293759	Rear: 650/65R38 R1W (MI, FI, TR) Front: 540/65R28 R1W (MI, FI, TR)		2,948.00
75-W1667	7294903B4 7293767	Rear: 480/80R34 Industrial (Nokian Industrial) Front: 400/80R24 Industrial (Nokian Industrial)		5,000.00
75-W1672	7294904B4 7293768	Rear: 480/80R38 Industrial (Nokian Industrial) Front: 400/80R28 Industrial (Nokian Industrial)		6,421.00
		Rear: Single Semi Dished Cast Centers- Set of 2		
		Front: Waffle Wheel		
75-Base	7294897B4 7294786	Rear: 460/85R38 R1W (18.4R38) (MI, FI, TR) Front: 380/85R28 R1W (14.9R28) (MI, FI, TR)		**In Base**
75-W1533	7294893B4 7293763	Rear: 520/85R38 R1W (MI, FI, TR) Front: 420/85R28 R1W (MI, FI, TR)		2,743.00
75-W1377	7294882B4 7293764	Rear: 480/80R42 R1W (MI, TR) Front: 380/85R30 R1W (MI, TR)		1,426.00
75-W1388	7294884B4 7293763	Rear: 420/80R46 R1W (MI) Front: 420/85R28 R1W (MI)		2,766.00
75-W1409	7294884B4 7293764	Rear: 420/80R46 R1W (MI) Front: 380/85R30 R1W (MI)		2,126.00
75-W1318	7294883B4 7293764	Rear: 380/90R46 R1W (MI) Front: 380/85R30 R1W (MI)		1,431.00
75-W1384	7294882B4 7293763	Rear: 480/80R42 R1W (MI, TR) Front: 420/85R28 R1W (MI, TR)		2,066.00
		BAR AXLES- LONG		
		Rear: Dual Cast Inner / Steel Outer - Set of 4		
		Front: Waffle Wheel		
75-W1374	7294898B4 7294786	Duals: 460/85R38 R1W (18.4R38) (MI, TR, FI) Front: 380/85R28 R1W (14.9R28) (MI, TR, FI)		7,174.00
75-W1379	7294887B4 7293764	Duals: 380/90R46 R1W (MI) Front: 380/85R30 R1W (MI)		8,877.00
75-W1410	7294888B4 7293764	Duals: 420/80R46 R1W (MI) Front: 380/85R30 R1W (MI)		9,839.00
75-W1471	7294888B4 7293763	Duals: 420/80R46 R1W (MI) Front: 420/85R28 R1W (MI)		10,479.00
75-W1380	7294886B4 7293764	Duals: 480/80R42 R1W (MI, TR) Front: 380/85R30 R1W (MI, TR)		8,147.00
75-W1386	7294886B4 7293763	Duals: 480/80R42 R1W (MI, TR, FI) Front: 420/85R28 R1W (MI, TR, FI)		8,787.00
75-W1658	7294896B4 7293763	Duals: 520/85R38 R1W (MI, TR, FI) Front: 420/85R28 R1W (MI, TR, FI)		9,117.00

(F.O.B. PORT OF ENTRY)

TIRES for 6715S & 6716S Dyna-VT

FRONT AND REAR TIRES - CONTINUED

Order Code	Catalog Number	Description	Approx. Weight (lb.)	List Price
		BAR AXLES- SHORT AND LONG		
		Rear: Single Welded Pressed Steel - Set of 2		
		Front: Fixed Welded Steel Rim		
75-W1670	7294899B4 7294784B2	Rear: 540/65R38 R1W (MI, FI, TR) Front: 440/65R28 R1W (MI, FI, TR)		(642.00)
75-W1572	7294894B4 7293758B2	Rear: 600/65R38 R1W (MI, FI, TR) Front: 480/65R28 R1W (MI, FI, TR)		(72.00)
75-W1673	7294905B4 7294791B2	Rear: 540/80R38 (Nokian Industrial) Front: 440/80R28 (Nokian Industrial)		8,936.00
75-W1262	7294895B4 7294783B2	Rear: 650/65R38 R1W (MI, FI, TR) Front: 540/65R28 R1W (MI, FI, TR)		2,948.00
		Rear: Single Semi Dished Cast Centers- Set of 2		
		Front: Waffle Wheel		
75-Base	7294897B4 7293762B2	Rear: 460/85R38 R1W (18.4R38) (MI, FI, TR) Front: 380/85R28 R1W (14.9R28) (MI, FI, TR)		**In Base**
75-W1533	7294893B4 7294762B2	Rear: 520/85R38 R1W (MI, FI, TR) Front: 420/85R28 R1W (MI, FI, TR)		2,743.00
75-W1377	7294882B4 7294765B2	Rear: 480/80R42 R1W (MI, TR) Front: 380/85R30 R1W (MI, TR)		1,426.00
75-W1620	7294882B4 7294769B2	Rear: 480/80R42 R1W (MI) Front: 320/85R34 R1W (MI)		2,175.00
75-W1548	7294883B4 7294769B2	Rear: 380/90R46 R1W (MI) Front: 320/85R34 R1W (MI)		2,180.00
75-W1388	7294884B4 7294762B2	Rear: 420/80R46 R1W (MI) Front: 420/85R28 R1W (MI)		2,766.00
75-W1409	7294884B4 7294765B2	Rear: 420/80R46 R1W (MI) Front: 380/85R30 R1W (MI)		2,126.00
75-W1624	7294884B4 7294769B2	Rear: 420/80R46 R1W (MI) Front: 320/85R34 R1W (MI)		2,875.00
75-W1318	7294883B4 7294765B2	Rear: 380/90R46 R1W (MI, FI) Front: 380/85R30 R1W (MI, FI)		1,431.00
75-W1394	7294885B4 7294769B2	Rear: 320/90R50 R1W (MI) Front: 320/85R34 R1W (MI)		1,594.00
75-W1384	7294882B4 7294762B2	Rear: 480/80R42 R1W (MI, TR) Front: 420/85R28 R1W (MI, TR)		2,066.00

(F.O.B. PORT OF ENTRY)

TIRES for 6715S & 6716S Dyna-VT

FRONT AND REAR TIRES - CONTINUED

BAR AXLES- LONG

Rear: Dual Cast Inner / Steel Outer - Set of 4
Front: Waffle Wheel

Order Code	Catalog Number	Description	Approx. Weight (lb.)	List Price
75-W1374	7294898B4 7293762B2	Duals: 460/85R38 R1W (18.4R38) (MI, TR, FI) Front: 380/85R28 R1W (14.9R28) (MI, TR, FI)		7,174.00
75-W1395	7294889B4 7294769B2	Duals: 320/90R50 R1W (MI) Front: 320/85R34 R1W (MI)		9,879.00
75-W1549	7294887B4 7294769B2	Duals: 380/90R46 R1W (MI) Front: 320/85R34 R1W (MI)		9,626.00
75-W1379	7294887B4 7294765B2	Duals: 380/90R46 R1W (MI) Front: 380/85R30 R1W (MI)		8,877.00
75-W1625	7294888B4 7294769B2	Duals: 420/80R46 R1W (MI) Front: 320/85R34 R1W (MI)		10,588.00
75-W1410	7294888B4 7294765B2	Duals: 420/80R46 R1W (MI) Front: 380/85R30 R1W (MI)		9,839.00
75-W1471	7294888B4 7294762B2	Duals: 420/80R46 R1W (MI) Front: 420/85R28 R1W (MI)		10,479.00
75-W1621	7294886B4 7294769B2	Duals: 480/80R42 R1W (MI) Front: 320/85R34 R1W (MI)		8,896.00
75-W1380	7294886B4 7294765B2	Duals: 480/80R42 R1W (MI, TR) Front: 380/85R30 R1W (MI, TR)		8,147.00
75-W1386	7294886B4 7294762B2	Duals: 480/80R42 R1W (MI, TR) Front: 420/85R28 R1W (MI, TR)		8,787.00
75-W1658	7294896B4 7294762B2	Duals: 520/85R38 R1W (MI, TR, FI) Front: 420/85R28 R1W (MI, TR, FI)		9,117.00

(F.O.B. PORT OF ENTRY)

Order Code	Catalog Number	Description	Approx. Weight (lb.)	List Price
PTO				
DYNA-6				
100-LC002	Base	Standard and Economy PTO Drive -2000 & 1550. . . . Engine RPM. Exchangeable Shaft PTO- 540 RPM 6 Spline + 1000 RPM 21 Spline		**In Base**
100-LC001	7293589	540 RPM 6 Spline & 1000 RPM 21 Spline . . . . . Exchangeable Shaft with No Economy		(917.00)
DYNA-VT				
100-Base	Base	540/540E/1000 RPM Flanged PTO with one 6 Spline Shaft and one 21 Spline Shaft, with In-Cab Controls		**In Base**
FRONT HITCH				
230-FA000	Base	Less Front Hitch		**In Base**
230-F1132	7293594	2800 kg (6172 lbs) Front Linkage with . . . . . 1 Set of Hydraulic Couplers		6,376.00
230-F1154	7295193	2800 kg (6172 lbs) Front Linkage with 1 Set of . . . . . Hydraulic Couplers with Belly Weight		7,231.00
230-F1155	7295194	2800 kg (6172 lbs) Front Linkage with 1 Set . . . . . of Hydraulic Couplers Cylinders with 1 Set of Hydraulic Couplers with Front PTO (21 Spline Anti-Clockwise)		13,240.00
230-F1143	7295195	2800 kg (6172 lbs) Front Linkage, Double Acting . . . Cylinders with 2 Sets of Front Hydraulic Couplers with Pressure Drain		4,953.00
230-F1156	7295196	2800 kg (6172 lbs) Front Linkage, Double Acting . . . Cylinders with 2 Sets of Front Hydraulic Couplers with Pressure Drain with Belly Weight		5,850.00
230-F1157	7295197	2800 kg (6172 lbs) Front Linkage, Double Acting . . . Cylinders with 2 Sets of Front Hydraulic Couplers with Pressure Drain with Front PTO (21 Spline Anti-Clockwise)		14,465.00
LOADER PROVISION				
350-LL000	Base	Less Loader Provisions.		**In Base**
350-LL004	7293484	Front Loader Provisions including Hydraulics, Subframe Requires: Valves 1 and 2 Electric with a Joystick (KX012) Not Compatible with 2 sets of Front Hydraulic Couplers (Front Hitch)		6,029.00
350-LL005	7295249	Front Loader Provision w/Live 3rd-SMS Loader Control Requires: Valves 1 and 2 Electric with a Joystick (KX012) & Less Front Hitch		7,500.00
CAB				
365-AF009	7294249	Radio, AM/FM, MP3 Compatible		(110.00)
125-AE042	7293546	Superluxe Grammar Seat		1,792.00
140-AI020	7293077	Standard Cab Roof with Roof Hatch		273.00
140-E1022	7293078	Visio roof . . . . . Not Compatible with: Automatic Climate Control (AQ004) 2 Front and 2 Rear Xenon Work Lights (VG078) Instrument Control Panel (Auto Steering Ready) (BA012) Instrument Control Panel (Auto Steering Complete) (BA021)		1,586.00
120-AQ001	7295100	Manual AC		(1,162.00)

MASSEY FERGUSON®

(F.O.B. PORT OF ENTRY)

Order Code	Catalog Number	Description	Approx. Weight (lb.)	List Price
FRONT WEIGHTS				
285-YA112	7293487	121 lbs. (55 kg.) Front Weights, Set of 12 . . . . . with Hardware - total Weight 1,455 lbs. (660 kg.)		2,295.00
REAR WHEEL WEIGHTS				
325-RD040	7294192*	551 lbs. (250 kg.) Weights, Set of 2 . . . . . Mounts Externally to Wheel	1102	1,845.00
325-RD041	7294200*	551 lbs. (250 kg.) Weights, Set of 4 . . . . . Mounts Externally to Wheel	2204	3,689.00
		***NOT COMPATIBLE WITH 30" AND 34" RIMS**		
BELLY AND HITCH WEIGHTS				
245-YD001	7293374	1 Belly Weight - 584 lbs. (265 kg.) . . . . . (For use **WITHOUT** Front 3-Point Hitch)	584	1,490.00
345-YB003	7294119	1873 lbs. (850 kg.) Monoblock Weight	1984	3,440.00
345-YB004*	7294271	3,307 lbs (1500 kg) Monoblock Weight		5,677.00
		***NOT COMPATIBLE WITH FRONT WEIGHTS**		
ELECTRICAL				
215-CB002	Base	Engine Block Heater - 110 Volt		**In Base**
215-CB000	7293593	Less Engine Block Heater		(204.00)
		(Not Available with ISOBUS.)		
TELEMETRY				
160-BS003	7295247	Telemetry Ready (Antenna, Wiring and Box)		950.00
LIGHTING				
205-VF013	7293103	Dual Roof-Mounted Rotating Beacons, Left and Right . (Includes SAE SMV sign)	1102	522.00
195-VG078	7295103	2 Front and 2 Rear Xenon Work Lights.. . . . . Xenon Bulb for Brighter Lights and Longer Bulb Life		3,392.00
360-VE019	7293476	Extremity Lighting . . . . . (Required with Long Bar Axle)		756.00

(F.O.B. PORT OF ENTRY)

Order Code	Catalog Number	Description	Approx. Weight (lb.)	List Price
PIVOTING FRONT FENDERS				
155-WE110	Base	Pivoting Front Fenders - Standard Width . . . . . Width depends on tire selection; see Chart Below		**In Base**
155-WE111	7293598	Pivoting Front Fenders - Wide Width . . . . . Width depends on tire selection; see Chart Below		120.00

Fender Size		
Standard	**Wide**	**Tire Sizes**
12.6" (320 mm)	13.9" (355 mm)	320/85R34 (12.4R34)
13.9" (355 mm)	14.9" (380 mm)	340/85R24 (13.6R24) 340/85R28 (13.6R28)
14.9" (380 mm)	16.1" (410 mm)	380/85R28 (14.9R28) 380/85R30 (14.9R30) 400/80R24 400/80R28
16.1" (410 mm)	18.5" (470 mm)	420/85R28 (16.9R28) 440/65R28
18.5" (470 mm)	20.4" (520 mm)	440/80R28 480/65R28
20.4" (520 mm)	24.4" (620 mm)	540/65R28

REAR FENDERS				
255-WD012	Base	Rear Fenders without Extensions, 78.74"(2.00 M) . . .		**In Base**
255-WD017	7293107	Wide Fender -90.55" (2.3 M) with Rear Extension . . .		1,323.00
255-WD020	7293109	Extra Wide Fender -100.4" (2.55 M) . . . . . with Rear Extension		1,464.00

(F.O.B. PORT OF ENTRY)

Order Code	Catalog Number	Description	Approx. Weight (lb.)	List Price
MISCELLANEOUS				
35-EN002	7293402	14:1 Super Creeper Reduction Gear . . . . . **(Available on Dyna-6 Editions Only)**		2,907.00
250-GS001	7293100	Hydraulic Trailer Brakes		817.00
250-GS062	7293551	Pneumatic Trailer Brakes		6,767.00
250-GS067	7293552	Pneumatic & Hydraulic		7,508.00
225-LQ001	7293553	Water Separator (Fuel Filter)		466.00
275-TC005	7294210	French Language OIB.		No Charge
275-TC011	7294211	Spanish Language OIB		No Charge
DEALER INSTALLED OPTIONS				
FRONT WEIGHTS				
	5020186M	8 x 55 KG (121 lbs.) Front Weights	968	1,545.00
	5020187M	10 x 55 KG (121 lbs.) Front Weights	1210	1,932.00
	5020188M	12 x 55 KG (121 lbs.) Front Weights	1452	2,295.00
	5020189M	14 x 55 KG (121 lbs.) Front Weights	1694	2,678.00

RESERVED

MASSEY FERGUSON®

7700 SERIES

HIGH HORSEPOWER

Beauvais Built

Dyna-4, Dyna-6, and Small Frame Dyna-VT
Possible Order Modifications in Weeks

	>9	7-9	5-6	Scheduled Completion Date
Auto-Guide™	o	X	X	
Front Axle/Rear Axle Type	o	X	X	
Air Conditioning/Heater	o	o	X	
Cab Audio	o	o	X	
Control Center Display (CCD)	o	o	X	
Front Fenders	o	o	X	
Front Weights	o	o	X	
Hydraulic & Pneumatic Trailer Brake	o	o	X	
Hydraulic Remotes	o	o	X	
Rear Fenders	o	o	X	
Rear Linkage & PTO	o	o	X	
Seat	o	o	X	
Wheels & Tires	o	o	X	
Working Lights & Mirrors	o	o	X	

Jackson Built

Possible Order Modifications in Weeks

	> 18	16 - 18	14 - 16	10 -14	6 - 10
Auto-Guide™ 3000	o	o	o	X	X
Front Axle/Rear Axle Type	o	0	X	X	X
Air Conditioning/Heater	o	o	o	X	X
Cab Audio	o	o	o	o	o
Control Center Display (CCD)	o	o	o	X	X
Front Fenders	o	o	o	o	o
Front Weights	o	o	o	o	o
Hydraulic/Pneumatic Trailer Brake	o	o	X	X	X
Hydraulic Remotes	o	o	o	X	X
Rear Fenders	o	o	o	X	X
Rear Linkage & PTO	o	o	X	X	X
Seat	o	o	o	X	X
Wheel & Tires	o	o	X	X	X
Working Lights & Mirrors	o	o	o	X	X

o = Components can be requested to be modified.
X = Components are frozen and cannot be modified.
*Dates subject to change without notice.

Guidelines for Availability and Order Changes

These charts list the possible change requests that can be made to the listed components through e-Ordering. The information provided is built off of the Scheduled Completion Date.

***Scheduled Completion Date; Not the Planned Available To Ship (PATS) Date**

MASSEY FERGUSON®

7714 / 7715 / 7716 / 7718 SERIES

HIGH HORSEPOWER

7700 SMALL FRAME CLASSIC EDITION

MASSEY FERGUSON®

(F.O.B. PORT OF ENTRY)

CLASSIC EDITION FEATURES

ENGINE
7714/7715/7716/7718
7714: 130 Rated Engine HP, 115 PTO HP
7715: 140 Rated Engine HP, 120 PTO HP
7716: 150 Rated Engine HP, 125 PTO HP
7718: 165 Rated Engine HP, 135 PTO HP

AGCO POWER™ 6.6L (403 cu in.) 6 Cylinder, Tier 4f Compliant
- SCR Technology
- Air-to-Air Aftercooled, Common Rail Injection, Turbocharged

Electronic Engine Management (EEM) with Dual ERPM Settings
Electronic Controlled Viscous Fan Drive
Dual Element Dry Type Air Cleaner
Vertical Exhaust at Right Front Cab Post
Cooling System: Antifreeze to Minus 30F (-34C)
Fuel Tank Capacity: 82 Gal (310L)
DEF Tank Capacity: 8 Gal (30L)

POWERTRAIN
7714/7715: Dyna-4 Transmission
- 16F/16R Semi-Powershift, 4 Ranges with 4 Powershifts per Range

7715/7716/7718: Dyna-6 Transmission
- 24F/24R Semi-Powershift, 4 Ranges with 6 Powershifts per Range

Multi-Disc Wet Brakes
Power Differential Lock
Independent PTO: 540/1000 RPM, 540 with 6 Spline Shaft, 1000 RPM with 21 Spline Shaft, Exchangeable Shafts
Rear Fender Mounted PTO Shut-Off
Flange Axles
Less SV1 & SV2 Settings

FRONT WHEEL ASSIST AXLE
Power Front Axle (PFA)
- 8 Bolt Pattern: 7714/7715 Dyna-4 / 7715/7716 Dyna-6
- 10 Bolt Pattern: 7718 Dyna-6

Shielded Center Drive Line with Electro-Hydraulic Control & Front Wheel Drive Differential Lock
55 Degree Steering Angle

HYDRAULICS
Closed Center Load Sensing 29 GPM (110 L/Min) Pump
2900 PSI (200 Bar) Maximum Pressure
3 Mechanical Valves – Lever Controlled on Right Hand Console
Hydrostatic Power Steering

HITCH
3 Point Hitch: Category 2/3 Linkage Ball Ends
- Active Transport Control
- Lower Link Sensing
- Electronic Draft Control, Electronic Height Control, and Rate of Drop
- Variable Float Telescopic Stabilizers
- Left and Right Side External 3 Point Control

Drawbar: Category 2, Clevis and Drop Pin

ELECTRICAL SYSTEM
175 Amp Alternator
2 – 12V Batteries, 600 CCA Each (SAE)
7 Pin ASAE Rear Trailer Electrical Outlet
Electrical Isolator Switch and Jumpstart Point
110V Engine Block Heater
Ignition with Neutral Start and Key Shutoff

LIGHTING
8 Front Hood Mounted Lights
Four Front Single Bulb Worklights
Two Rear Double Bulb Worklights
Taillights, Flashing Warning Lights and Turn Signals

INSTRUMENTS
Tachometer: Digital and Analog
PTO Speed: Digital
Ground Speed Display: Digital
Fuel Level, DEF Level, and Coolant Temp Gauges
Warning/Information Lights

OPERATOR AREA
Instructor Seat with Seat Belt
6 Post Cab
Transmission Control T-Handle on Right Hand Console
Adjustable Steering Column
Front Sun Visor
Air Conditioning and Heater
Air Suspended Seat - Manual Adjustment
Front and Rear Windshield Wiper/Washer
Dual Large Telescoping Outside Rear View Mirrors
Single Inside Rear View Mirror
2 Audio Speakers and Antenna
3 Pin 12V Power Outlets
12V Cigarette Lighter Style Power Outlet

WHEELS AND TIRES
Rear 460/85R38 R1W Single Wheels
Front 380/85R28 R1W Single Waffle Wheels

OTHER STANDARD FEATURES
AGCOMMAND™ Equipped w/ Antenna, Bracket, Harness & Telemetry Module, Includes: AGCOMMAND™ Advanced (1 Year Subscription, Must be activated within 12 months of warranty registration)
Lockable Tool Box
SMV Sign
Molded Rear Fenders
English Literature

(F.O.B. PORT OF ENTRY)

Order Code	Catalog Number	Description	Approx. Weight (lb.)	List Price

ONE *ORDER CODE* FROM EACH GROUP MUST BE SPECIFIED. (Unless In Base Option is desired)

BASE MACHINE

DYNA-4 EDITIONS -- Beauvais Built

MF7714~D4~ES~01	7295162	Massey 7714 Classic Tractor 115 PTO HP	133,313.00
MF7715~D4~ES~01	7295163	Massey 7715 Classic Tractor 120 PTO HP	136,348.00

DYNA-6 EDITIONS -- Beauvais Built

MF7715~D6~ES~01	7295164	Massey 7715 Classic Tractor 120 PTO HP	138,812.00
MF7716~D6~ES~01	7295165	Massey 7716 Classic Tractor 125 PTO HP	141,847.00
MF7718~D6~ES~01	7295166	Massey 7718 Classic Tractor 135 PTO HP	147,918.00

TRANSMISSION OPTIONS FOR DYNA-4 EDITIONS

FOR MF 7714 AND 7715

25-EA637	Base	4x4 Dyna-4 Transmission with 16F/16R gears . . . . 25 MPH (40 KPH) with Dynamic Tractor Management (DTM) Includes: Non-Suspended Power Front Axle	**In Base**
25-NA032	7295179	4x4 Dyna-4 Transmission with 16F/16R gears . . . . 25 MPH (40 KPH) with Dynamic Tractor Management (DTM) Includes: Suspended Power Front Axle	7,105.00

TRANSMISSION OPTIONS FOR DYNA-6 EDITIONS

FOR MF7715 AND MF7716

25-EA655	Base	6x4 Dyna-6 Transmission with 24F/24R gears . . . . 25 MPH (40 KPH) with Dynamic Tractor Management (DTM) Includes: Non-Suspended Power Front Axle & Power Assisted Main Brakes	**In Base**
25-NA032	7295180	6x4 Dyna-6 Transmission with 24F/24R gears . . . . 25 MPH (40 KPH) with Dynamic Tractor Management (DTM). Includes: Suspended Power Front Axle & Power Assisted Main Brakes	7,105.00
25-G1061	7295181	6X4 Dyna-6 Transmission with 24F/24R gears . . . . 31 MPH (50 KPH) with Dynamic Tractor Management (DTM). Includes: Suspended Power Front Axle & High Capacity Power Assist Brakes	9,422.00

FOR MF7718

25-EA655	Base	6x4 Dyna-6 Transmission with 24F/24R gears . . . . 25 MPH (40 KPH) with Dynamic Tractor Management (DTM) Includes: Non-Suspended Power Front Axle & Power Assisted Main Brakes	**In Base**
25-NA032	7295182	6x4 Dyna-6 Transmission with 24F/24R gears . . . . 25 MPH (40 KPH) with Dynamic Tractor Management (DTM). Includes: Suspended Power Front Axle & Power Assisted Main Brakes	7,105.00
25-G1061	7295183	6X4 Dyna-6 Transmission with 24F/24R gears . . . . 31 MPH (50 KPH) with Dynamic Tractor Management (DTM). Includes: Suspended Power Front Axle & High Capacity Power Assist Brakes	9,422.00

(F.O.B. PORT OF ENTRY)

Order Code	Catalog Number	Description	Approx. Weight (lb.)	List Price
AUXILIARY HYDRAULIC FLOW				
370-DP110	Base	29 gpm (110 L/min) Closed Center Load Sensing (CCLS) System		**In Base**
AUXILIARY VALVE 1 & 2				
50-KX010	Base	2 Mechanical Controlled Valves, ... Located on right hand console. (1st and 2nd - Flow Dividing, Kickout, Zero Leak, Float)		**In Base**
AUXILIARY VALVE 3 & 4				
55-MU003	Base	3rd Mechanical Valve Only, ... Located on right hand console. (Kickout, Zero Leak, Flow Dividing, Float)		**In Base**
55-MU012	7293531	3rd and 4th Mechanically Controlled Valves, ... with levers located in Right Hand Console Kickout, Zero Leak, Flow Dividing, Float		1,170.00
POWER BEYOND				
90-GR000	Base	Less Power Beyond		**In Base**
90-GR010	7295153	Power Beyond Couplers P/T/LS/D		737.00
REAR AXLE				
60-EE400	Base	Flange Axle		**In Base**
60-EE402	7293024	Short Bar Rear Axle, 80 in. (2028mm) Long, ... 3.23 in (82mm) Diameter		622.00
60-EE404	7293025	Long Bar Rear Axle, 3.23 in (82mm) Diameter, ... 105 in (2672mm) Long . . . . . (Requires: Extremity Lights VE019)		1,380.00
REAR 3-POINT HITCH				
85-GC009	Base	Category 2/3 Telescopic Ball End Links.		**In Base**
85-GC025	7293405	Category 3 Hook End Links, with Hook Style Links . . . and Cat 3/3 and Cat 2/3 Balls and Cones.		115.00
INSTRUMENT PANEL / CONTROL CENTER DISPLAY (CCD)				
175-BA005	Base	Analog and Digital Instrument Panel w/o Radar or Slip . Control. No Control Center Display (CCD).		**In Base**
175-BA003	7293084	Analog and Digital Instrument Panel with Radar . . . . (For Actual Ground Speed) and Slip Control. No Control Center Display (CCD).		882.00

(F.O.B. PORT OF ENTRY)

TIRES for 7714

Order Code	Catalog Number	Description	Approx. Weight (lb.)	List Price
TIRE BRAND SELECTION				
70-Blank	7294212	Factory Brand Choice		No Charge
70-T0001	7294195	Michelin Brand Required		1,615.00
70-T0007	7294197	Firestone Brand Required		1,205.00
70-T0010	7294198	Trelleborg Brand Required		1,205.00
FRONT AND REAR TIRES				
		FLANGE AXLE*		
		Rear: Single Pressed Steel Manual Adjust - Set of 2		
		Front: Waffle Wheel		
75-Base	7292864	Rear: 460/85R38 R1W (MI, FI, TR)		**In Base**
	7294786	Front: 380/85R28 R1W (MI, FI, TR)		
75-W1309	7292865	Rear: 520/85R38 R1W (MI, FI, TR)		1,398.00
	7293763	Front: 420/85R28 R1W (MI, FI, TR)		
		Rear: Single Welded Pressed Steel - Set of 2		
		Front: Fixed Welded Steel Rim		
75-W1476	7292871	Rear: 480/80R34 Industrial (Nokian Industrial)		5,984.00
	7293767	Front: 400/80R24 Industrial(Nokian Industrial)		
75-W1511	7292872	Rear: 480/80R38 Industrial (Nokian Industrial)		8,109.00
	7293768	Front: 400/80R28 Industrial (Nokian Industrial)		
75-W1258	7292860	Rear: 650/65R38 R1W (MI, TR)		4,373.00
	7293759	Front: 540/65R28 R1W (MI, TR)		
75-W1299	7292897	Rear: 460/85R38 R1W (MI, FI, TR)		103.00
	7294786	Front: 380/85R28 R1W (MI, FI, TR)		
75-W1530	7292898	Rear: 520/85R38 R1W (MI, FI, TR)		1,398.00
	7293763	Front: 420/85R28 R1W (MI, FI, TR)		

*** FIRESTONE TREAD TYPE IS R1**

(F.O.B. PORT OF ENTRY)

TIRES for 7714

Order Code	Catalog Number	Description	Approx. Weight (lb.)	List Price
		BAR AXLES- SHORT AND LONG		
		Rear: Single Welded Pressed Steel - Set of 2		
		Front: Fixed Welded Steel Rim		
75-W1670	7294899B5	Rear: 540/65R38 R1W (MI, TR)		759.00
	7293757	Front: 440/65R28 R1W (MI, TR)		
75-W1572	7294894B5	Rear: 600/65R38 R1W (MI, TR)		1,340.00
	7294785	Front: 480/65R28 R1W (MI, TR)		
75-W1673	7294905B5	Rear: 540/80R38 (Nokian Industrial)		10,372.00
	7293769	Front: 440/80R28 (Nokian Industrial)		
75-W1262	7294895B5	Rear: 650/65R38 R1W (MI, FI, TR)		4,383.00
	7293759	Front: 540/65R28 R1W (MI, FI, TR)		
		Rear: Single Semi Dished Cast Centers- Set of 2		
		Front: Waffle Wheel		
75-W1300	7294897B5	Rear: 460/85R38 R1W (18.4R38) (MI, FI, TR)		1,436.00
	7294786	Front: 380/85R28 R1W (14.9R28) (MI, FI, TR)		
75-W1318	7294883B5	Rear: 380/90R46 R1W* (MI)		2,865.00
	7293764	Front: 380/85R30 R1W* (MI)		
75-W1409	7294884B5	Rear: 420/80R46 R1W* (MI)		3,562.00
	7293764	Front: 380/85R30 R1W* (MI)		
75-W1377	7294882B5	Rear: 480/80R42 R1W* (MI, TR)		2,861.00
	7293764	Front: 380/85R30 R1W* (MI, TR)		
75-W1384	7294882B5	Rear: 480/80R42 R1W (MI, TR)		3,501.00
	7293763	Front: 420/85R28 R1W (MI, TR)		
75-W1533	7294893B5	Rear: 520/85R38 R1W (MI, FI, TR)		4,178.00
	7293763	Front: 420/85R28 R1W (MI, FI, TR)		
		BAR AXLES- LONG		
		Rear: Dual Cast Inner / Steel Outer - Set of 4		
		Front: Waffle Wheel		
75-W1374	7294898B5	Duals: 460/85R38 R1W (MI, TR, FI)		8,609.00
	7294786	Front: 380/85R28 R1W (MI, TR, FI)		
75-W1379	7294887B5	Duals: 380/90R46 R1W (MI)		10,312.00
	7293764	Front: 380/85R30 R1W (MI)		
75-W1410	7294888B5	Duals: 420/80R46 R1W* (MI)		11,274.00
	7293764	Front: 380/85R30 R1W* (MI)		
75-W1380	7294886B5	Duals: 480/80R42 R1W* (MI, TR)		9,583.00
	7293764	Front: 380/85R30 R1W* (MI, TR)		
75-W1386	7294886B5	Duals: 480/80R42 R1W (MI, TR)		10,223.00
	7293763	Front: 420/85R28 R1W (MI, TR)		
		Rear: Dual Cast Inner / Cast Outer - Set of 4		
		Front: Waffle Wheel		
75-W1408	7294925B5	Duals: 380/90R46 R1W (MI)		10,415.00
	7293764	Front: 380/85R30 R1W (MI)		
75-W1412	7294926B5	Duals: 420/80R46 R1W* (MI)		11,377.00
	7293764	Front: 380/85R30 R1W* (MI)		
75-W1407	7294927B5	Duals: 480/80R42 R1W* (MI, TR)		9,686.00
	7293764	Front: 380/85R30 R1W* (MI, TR)		
75-W1405	7294927B5	Duals: 480/80R42 R1W (MI, TR)		10,326.00
	7293763	Front: 420/85R28 R1W (MI, TR)		

NOTE: OUTER CAST WHEEL WILL ALLOW FOR 120" TREAD SETTING ON 82MM LONG BAR AXLE

*** FIRESTONE TREAD TYPE IS R1**

(F.O.B. PORT OF ENTRY)

Order Code	Catalog Number	Description	Approx. Weight (lb.)	List Price

TIRES for 7715 and 7716

FRONT AND REAR TIRES - CONTINUED

FLANGE AXLE*

Rear: Single Pressed Steel Manual Adjust - Set of 2
Front: Waffle Wheel

75-Base	7292864 7294786	Rear: Front:	460/85R38 R1W (MI, FI, TR) 380/85R28 R1W (MI, FI, TR)	**In Base**
75-W1309	7292865 7293763	Rear: Front:	520/85R38 R1W (MI, FI, TR) 420/85R28 R1W (MI, FI, TR)	1,398.00

Rear: Single Welded Pressed Steel - Set of 2
Front: Fixed Welded Steel Rim

75-W1478	7292873 7293769	Rear: Front:	540/80R38 (Nokian Industrial) 440/80R28 (Nokian Industrial)	10,362.00
75-W1258	7292860 7293759	Rear: Front:	650/65R38 R1W (MI, TR) 540/65R28 R1W (MI, TR)	4,373.00
75-W1299	7292897 7294786	Rear: Front:	460/85R38 R1W (MI, FI, TR) 380/85R28 R1W (MI, FI, TR)	103.00
75-W1530	7292898 7293763	Rear: Front:	520/85R38 R1W (MI, FI, TR) 420/85R28 R1W (MI, FI, TR)	1,398.00

BAR AXLES- SHORT AND LONG

Rear: Single Welded Pressed Steel - Set of 2
Front: Fixed Welded Steel Rim

75-W1670	7294899B5 7293757	Rear: Front:	540/65R38 R1W (MI, TR) 440/65R28 R1W (MI, TR)	759.00
75-W1572	7294894B5 7294785	Rear: Front:	600/65R38 R1W (MI, TR) 480/65R28 R1W (MI, TR)	1,340.00
75-W1673	7294905B5 7293769	Rear: Front:	540/80R38 (Nokian Industrial) 440/80R28 (Nokian Industrial)	10,372.00
75-W1262	7294895B5 7293759	Rear: Front:	650/65R38 R1W (MI, TR) 540/65R28 R1W (MI, TR)	4,383.00

*** FIRESTONE TREAD TYPE IS R1**

(F.O.B. PORT OF ENTRY)

TIRES for 7715 and 7716

FRONT AND REAR TIRES - CONTINUED

Order Code	Catalog Number	Description	Approx. Weight (lb.)	List Price
		BAR AXLES- SHORT AND LONG		
		Rear: Single Semi Dished Cast Centers- Set of 2		
		Front: Waffle Wheel		
75-W1300	7294897B5	Rear: 460/85R38 R1W (18.4R38) (MI, FI, TR)		1,436.00
	7294786	Front: 380/85R28 R1W (14.9R28) (MI, FI, TR)		
75-W1318	7294883B5	Rear: 380/90R46 R1W* (MI)		2,865.00
	7293764	Front: 380/85R30 R1W* (MI)		
75-W1409	7294884B5	Rear: 420/80R46 R1W* (MI)		3,562.00
	7293764	Front: 380/85R30 R1W* (MI)		
75-W1377	7294882B5	Rear: 480/80R42 R1W* (MI, TR)		2,861.00
	7293764	Front: 380/85R30 R1W* (MI, TR)		
75-W1384	7294882B5	Rear: 480/80R42 R1W (MI, TR)		3,501.00
	7293763	Front: 420/85R28 R1W (MI, TR)		
75-W1533	7294893B5	Rear: 520/85R38 R1W (MI, FI, TR)		4,178.00
	7293763	Front: 420/85R28 R1W (MI, FI, TR)		
		BAR AXLES- LONG		
		Rear: Dual Cast Inner / Steel Outer - Set of 4		
		Front: Waffle Wheel		
75-W1374	7294898B5	Duals: 460/85R38 R1W (MI, TR, FI)		8,609.00
	7294786	Front: 380/85R28 R1W (MI, TR, FI)		
75-W1379	7294887B5	Duals: 380/90R46 R1W (MI)		10,312.00
	7293764	Front: 380/85R30 R1W (MI)		
75-W1410	7294888B5	Duals: 420/80R46 R1W* (MI)		11,274.00
	7293764	Front: 380/85R30 R1W* (MI)		
75-W1380	7294886B5	Duals: 480/80R42 R1W* (MI, TR)		9,583.00
	7293764	Front: 380/85R30 R1W* (MI, TR)		
75-W1386	7294886B5	Duals: 480/80R42 R1W (MI, TR)		10,223.00
	7293763	Front: 420/85R28 R1W (MI, TR)		
		Rear: Dual Cast Inner / Cast Outer - Set of 4		
		Front: Waffle Wheel		
75-W1408	7294925B5	Duals: 380/90R46 R1W (MI)		10,415.00
	7293764	Front: 380/85R30 R1W (MI)		
75-W1412	7294926B5	Duals: 420/80R46 R1W* (MI)		11,377.00
	7293764	Front: 380/85R30 R1W* (MI)		
75-W1407	7294927B5	Duals: 480/80R42 R1W* (MI, TR)		9,686.00
	7293764	Front: 380/85R30 R1W* (MI, TR)		
75-W1405	7294927B5	Duals: 480/80R42 R1W* (MI, TR)		10,326.00
	7293763	Front: 420/85R28 R1W* (MI, TR)		

NOTE: OUTER CAST WHEEL WILL ALLOW FOR 120" TREAD SETTING ON 82MM LONG BAR AXLE

*** FIRESTONE TREAD TYPE IS R1**

(F.O.B. PORT OF ENTRY)

Order Code	Catalog Number	Description	Approx. Weight (lb.)	List Price

TIRES for 7718

FRONT AND REAR TIRES

FLANGE AXLE*

Rear: Single Pressed Steel Manual Adjust - Set of 2
Front: Waffle Wheel

75-Base	7292864 7293762B2	Rear: Front:	460/85R38 R1W (MI, FI, TR) . . . . . . 380/85R28 R1W (MI, FI, TR)	**In Base**
75-W1309	7292865 7294762B2	Rear: Front:	520/85R38 R1W (MI, FI, TR) . . . . . . 420/85R28 R1W (MI, FI, TR)	1,398.00

Rear: Single Welded Pressed Steel - Set of 2
Front: Fixed Welded Steel Rim

75-W1478	7292873 7294791B2	Rear: Front:	540/80R38 (Nokian Industrial) . . . . . . 440/80R28 (Nokian Industrial)	10,362.00
75-W1258	7292860 7294783B2	Rear: Front:	650/65R38 R1W (MI, TR). . . . . . 540/65R28 R1W (MI, TR)	4,373.00
75-W1299	7292897 7293762B2	Rear: Front:	460/85R38 R1W (MI, FI, TR) . . . . . . 380/85R28 R1W (MI, FI, TR)	103.00
75-W1530	7292898 7294762B2	Rear: Front:	520/85R38 R1W (MI, FI, TR) . . . . . . 420/85R28 R1W (MI, FI, TR)	1,398.00

BAR AXLES- SHORT AND LONG

Rear: Single Welded Pressed Steel - Set of 2
Front: Fixed Welded Steel Rim

75-W1670	7294899B5 7294784B2	Rear: Front:	540/65R38 R1W (MI,TR) . . . . . . 440/65R28 R1W (MI, TR)	759.00
75-W1572	7294894B5 7293758B2	Rear: Front:	600/65R38 R1W (MI, TR). . . . . . 480/65R28 R1W (MI, TR)	1,340.00
75-W1673	7294905B5 7294791B2	Rear: Front:	540/80R38 (Nokian Industrial) . . . . . . 440/80R28 (Nokian Industrial)	10,372.00
75-W1262	7294895B5 7294783B2	Rear: Front:	650/65R38 R1W (MI, TR). . . . . . 540/65R28 R1W (MI, TR)	4,383.00

*** FIRESTONE TREAD TYPE IS R1**

(F.O.B. PORT OF ENTRY)

Order Code	Catalog Number	Description	Approx. Weight (lb.)	List Price

TIRES for 7718

BAR AXLES- SHORT AND LONG

Rear: Single Semi Dished Cast Centers- Set of 2
Front: Waffle Wheel

75-W1300	7294897B5 7293762B2	Rear: Front:	460/85R38 R1W (18.4R38) (MI, FI, TR) 380/85R28 R1W (14.9R28) (MI, FI, TR)	1,436.00
75-W1394	7294885B5 7294769B2	Rear: Front:	320/90R50 R1W (MI) 320/85R34 R1W (MI)	4,050.00
75-W1318	7294883B5 7294765B2	Rear: Front:	380/90R46 R1W* (MI) 380/85R30 R1W* (MI)	2,865.00
75-W1409	7294884B5 7294765B2	Rear: Front:	420/80R46 R1W* (MI) 380/85R30 R1W* (MI)	3,562.00
75-W1377	7294882B5 7294765B2	Rear: Front:	480/80R42 R1W* (MI, TR) 380/85R30 R1W* (MI, TR)	2,861.00
75-W1384	7294882B5 7294762B2	Rear: Front:	480/80R42 R1W (MI, TR) 420/85R28 R1W (MI, TR)	3,501.00
75-W1533	7294893B5 7294762B2	Rear: Front:	520/85R38 R1W (MI, FI, TR) 420/85R28 R1W (MI, FI, TR)	4,178.00

BAR AXLES- LONG

Rear: Dual Cast Inner / Steel Outer - Set of 4
Front: Waffle Wheel

75-W1374	7294898B5 7293762B2	Duals: Front:	460/85R38 R1W (MI, TR) 380/85R28 R1W (MI, TR)	8,609.00
75-W1395	7294889B5 7294769B2	Duals: Front:	320/90R50 R1W (MI) 320/85R34 R1W (MI)	4,050.00
75-W1379	7294887B5 7294765B2	Duals: Front:	380/90R46 R1W (MI) 380/85R30 R1W (MI)	10,312.00
75-W1410	7294888B5 7294765B2	Duals: Front:	420/80R46 R1W* (MI, FI) 380/85R30 R1W* (MI, FI)	11,274.00
75-W1380	7294886B5 7294765B2	Duals: Front:	480/80R42 R1W* (MI, TR, FI) 380/85R30 R1W* (MI, TR, FI)	9,583.00
75-W1386	7294886B5 7294762B2	Duals: Front:	480/80R42 R1W (MI, TR) 420/85R28 R1W (MI, TR)	10,223.00

Rear: Dual Cast Inner / Cast Outer - Set of 4
Front: Waffle Wheel

75-W1408	7294925B5 7294765B2	Duals: Front:	380/90R46 R1W (MI) 380/85R30 R1W (MI)	10,415.00
75-W1412	7294926B5 7294765B2	Duals: Front:	420/80R46 R1W* (MI) 380/85R30 R1W* (MI)	11,377.00
75-W1407	7294927B5 7294765B2	Duals: Front:	480/80R42 R1W* (MI, TR) 380/85R30 R1W* (MI, TR)	9,686.00
75-W1405	7294927B5 7294762B2	Duals: Front:	480/80R42 R1W* (MI, TR) 420/85R28 R1W* (MI, TR)	10,326.00

NOTE: OUTER CAST WHEEL WILL ALLOW FOR 120" TREAD SETTING ON 82MM LONG BAR AXLE

*** FIRESTONE TREAD TYPE IS R1**

(F.O.B. PORT OF ENTRY)

Order Code	Catalog Number	Description	Approx. Weight (lb.)	List Price
PTO				
100-LC001	Base	540 RPM 6 Spline and1000 RPM 21 Spline . . . . . Exchangeable Shaft with No Economy		**In Base**
100-LC002	7293068	540/540E/1000/1000E Exchangeable Shaft . . . . . 540 RPM 6 Spline and 1000 RPM 21 Spline with Economy PTO		945.00
FRONT HITCH				
7714 / 7715 DYNA-4	**7715 / 7716 / 7718 DYNA-6**			
230-FA000	Base	Less Front Hitch		**In Base**
230-F1132	7293594	2800 kg Front Linkage w/ 1 Set of Hydraulic Couplers .		6,376.00
230-F1154	7295193	2800 kg Front Linkage w/ 1 Set of Hydraulic Couplers . with Belly Weight		7,231.00
230-F1155	7295194	2800 kg Front Linkage w/ 1 Set of Hydraulic Couplers . Cylinders with 1 Set of Hydraulic Couplers with Front PTO (21 Spline Anti-Clockwise)		13,240.00
LOADER PROVISION				
350-LL000	Base	Less Loader Provisions.		**In Base**
350-LL001	7293445	Front Loader Provision - Mech Loader Control, ... Including Hydraulics and Subframe		6,403.00
CAB				
365-AF001	7295159	Antenna and Speakers (Less Radio)		(602.00)
125-AE027	7293430	Air Suspended Seat - Automatic Adjustment		355.00
140-AI020	7293077	Standard Cab Roof with Roof Hatch		273.00
140-E1022	7293078	Visio roof . . . . . Not Compatible with 2 Xenon and 2 Single Bulb Front Worklights, 2 Xenon Rear Worklights (VG078)		1,586.00
115-AM084	7293559	Mechanical Cab Suspension		1,705.00

(F.O.B. PORT OF ENTRY)

Order Code	Catalog Number	Description	Approx. Weight (lb.)	List Price
FRONT WEIGHTS				
285-YA112	7293487	121 LBS (55 KGS) Front Weights, Set of 12 . . . . . with Hardware - total Weight 1,455 LBS (660 KGS)		2,295.00
REAR WHEEL WEIGHTS				
325-RD040	7294192*	551 LBS (250 KGS) Weights, Set of 2 . . . . . Mounts Externally to Wheel	1102	1,845.00
325-RD041	7294200*	551 LBS (250 KGS) Weights, Set of 4 . . . . . Mounts Externally to Wheel	2204	3,689.00
		***NOT COMPATIBLE WITH MANUAL ADJUST FLANGE AXLE RIMS**		
BELLY AND HITCH WEIGHTS				
245-YD001	7293374	1 Belly Weight - 584 lbs. (265 kgs.) . . . . . (For use **WITHOUT** Front 3-Point Hitch)	584	1,490.00
345-YB003*	7294270	1,874 lbs (850 kg) Monoblock Weight		3,406.00
345-YB004*	7294271	3,307 lbs (1500 kg) Monoblock Weight		5,677.00
***NOT COMPATIBLE WITH FRONT WEIGHTS**				
ELECTRICAL				
215-CB002	Base	Engine Block Heater - 110 Volt		**In Base**
215-CB000	7293593	Less Engine Block Heater		(204.00)
ALTERNATOR				
220-CE020	Base	175 AMP Alternator . . . . . (Not Available with ISOBUS)		**In Base**
220-CE019	7293533	Twin 120 AMP Alternators		391.00
LIGHTING				
205-VF013	7293103	Dual Roof-Mounted Rotating Beacons, Left and Right . (Includes SAE SMV sign)		522.00
195-VG078	7295103	2 Xenon and 2 Single Bulb Front Worklights, ... 2 Xenon Rear Worklights		3,392.00
360-VE019	7293476	Extremity Lighting		756.00
190-VK004	7293597	Worklights on Handrails and Rear Fenders		543.00

(F.O.B. PORT OF ENTRY)

Order Code	Catalog Number	Description	Approx. Weight (lb.)	List Price
PIVOTING FRONT FENDERS				
155-WE000	Base	Less Pivoting Front Fenders		**In Base**
155-WE110	7294204	Pivoting Front Fenders - Standard Width . . . . . Width depends on tire selection; see Chart Below		1,699.00

Fender Size		
Standard	**Wide**	**Tire Sizes**
12.6" (320) mm	13.9" (355) mm	320/85R34 (12.4R34)
13.9" (355) mm	14.9" (380) mm	340/85R24 (13.6R24) 340/85R28 (13.6R28)
14.9" (380) mm	16.1" (410) mm	380/85R28 (14.9R28) 380/85R30 (14.9R30) 400/80R24 400/80R28
16.1" (410) mm	18.5" (470) mm	420/85R28 (16.9R28) 440/65R28
18.5" (470) mm	20.4" (520) mm	440/80R28 480/65R28
20.4" (520) mm	24.4" (620) mm	540/65R28

REAR FENDERS				
255-WD012	Base	Rear Fenders without Extensions, 78.74"(2.00 M) . . .		**In Base**
255-WD017	7293107	Wide Fender- 90.55" (2.3 M) with Rear Extension . . .		1,323.00
255-WD020	7293109	Extra Wide Fender -100.4" (2.55 M) . . . . . with Rear Extension		1,464.00

(F.O.B. PORT OF ENTRY)

Order Code	Catalog Number	Description	Approx. Weight (lb.)	List Price
MISCELLANEOUS				
35-EN002	7293402	14:1:1 Super Creeper Reduction Gear		2,907.00
250-GS001	7293100	Hydraulic Trailer Brakes		817.00
250-GS067	7293552	Pneumatic & Hydraulic Trailer Brakes		7,508.00
225-LQ001	7293553	Water Separator (Fuel Filter)		466.00
275-TC005	7294210	French Language OIB		No Charge
275-TC011	7294211	Spanish Language OIB		No Charge
DEALER INSTALLED OPTIONS				
FRONT WEIGHTS				
	5020186M	8 x 55kg (121 lbs.) Front Weights	968	1,545.00
	5020187M	10 x 55kg (121 lbs.) Front Weights	1210	1,913.00
	5020188M	12 x 55kg (121 lbs.) Front Weights	1452	2,295.00
	5020189M	14 x 55kg (121 lbs.) Front Weights	1694	2,678.00
	5020190M	16 x 55kg (121 lbs.) Front Weights	1936	3,060.00
REAR WEIGHT PACKAGE				
	5020202M	Additional Rear Wheel Weight Package - set of 2 x 250kg (550 lbs) 250kg Weight Weight can be mounted onto Cast Center or previously installed 250kg Cast Weight		2,029.00

RESERVED PAGE

7700 SMALL FRAME DELUXE EDITION

MASSEY FERGUSON®

(F.O.B. PORT OF ENTRY)

DELUXE EDITION FEATURES

ENGINE
7715/7716/7718
7715: 140 Rated Engine HP, 120 PTO HP
7716: 150 Rated Engine HP, 125 PTO HP
7718: 165 Rated Engine HP, 135 PTO HP

AGCO POWER™ 6.6L (403 cu in.) 6 Cylinder, Tier 4f Compliant
- SCR Technology
- Air-to-Air Aftercooled, Common Rail Injection, Turbocharged

Electronic Engine Management (EEM) with Dual ERPM Settings
Electronic Controlled Viscous Fan Drive
Dual Element Dry Type Air Cleaner
Vertical Exhaust at Right Front Cab Post
Cooling System: Antifreeze to Minus 30F (-34°C)
Fuel Tank Capacity: 82 Gal (310L)
DEF Tank Capacity: 8 Gal (30L)

POWERTRAIN
7715/7716/7718: Dyna-VT
- Continuously Variable Transmission, 60 ft/h to 31 MPH (18.2 Meters/h to 50 KPH)
- Dynamic Tractor Management (DTM) with Two Programmable Cruise Speeds
- Short Bar Rear Axle, 90 In. (2277mm) Long, 3.74 in. (95mm) Diameter

7715/7716/7718: Dyna-6 Transmission
- 24F/24R Semi-Powershift, 4 Ranges with 6 Powershifts per Range

  40 kph (25 mph) Max Speed
- Dynamic Tractor Management (DTM) with Two Programmable Cruise Speeds
- Short Bar Rear Axle, 80 In. (2028mm) Long, 3.23 In (82mm) Diameter

Multi-Disc Wet Brakes
Power Differential Lock
Independent PTO:
Dyna-VT: 540/540E/1000/1000E RPM Flanged Shaft, 540 with 6 Spline and 1000 with 21 Spline
Dyna-6: 540/540E/1000/1000E Exchangeable Shaft, 540 with 6 Spline and 1000 with 21 Spline with Electric Control
Rear Fender Mounted PTO Shut-Off
SV1 & SV2 Settings

FRONT WHEEL ASSIST AXLE
Power Front Axle (PFA)
- 8 Bolt Pattern: 7715/7716 Dyna-6 and Dyna-VT
- 10 Bolt Pattern: 7718 Dyna-6 and Dyna-VT

Suspended Front Axle
Shielded Center Drive Line with Electro-Hydraulic Control & Front Wheel Drive Differential Lock
55 Degree Steering Angle
SpeedSteer

HYDRAULICS
Closed Center Load Sensing 29 gpm (110 L/Min) Pump
2900 PSI (200 Bar) Maximum Pressure
2 Electric Valves - Fingertip Controlled on Armrest, 2 Mechanical Valves – Lever Controlled on Right Hand Console
Hydrostatic Power Steering
Fender Control for One Valve
Power Beyond

HITCH
3 Point Hitch: Category 2/3 Linkage Ball Ends
- Active Transport Control
- Lower Link Sensing
- Electronic Draft Control, Electronic Height Control and Rate of Drop
- Variable Float Telescopic Stabilizers
- Left and Right Side External 3 Point Control

Drawbar: Category 2, Clevis and Drop Pin

ELECTRICAL SYSTEM
2 – 120 Amp Alternators
2 – 12V Batteries, 600 CCA Each (SAE)
7 Pin ASAE Rear Trailer Electrical Outlet
Electrical Isolator Switch and Jumpstart Point
110V Engine Block Heater
Ignition with Neutral Start and Key Shutoff

LIGHTING
8 Front Hood Mounted Lights
Four Front Single Bulb Worklights
Two Rear Double Bulb Worklights
Two Field Lights on Hand Rails and Rear Fenders with Taillights, Flashing Warning Lights, and Turn Signals

INSTRUMENTS
Control Center Display (CCD)
- Video Input
- Electric Valve Control
- ISOBUS Compliant

Radar with Slip Control
Tachometer: Digital and Analog
PTO Speed: Digital
Ground Speed Display: Digital
Fuel Level, DEF Level, and Coolant Temp Gauges
Warning/Information Lights

OPERATOR AREA
Instructor Seat with Seat Belt
Mechanical Cab Suspension
6 Post Cab
Transmission Control T-Handle on Armrest
Adjustable Steering Column
Front Sun Visor
Air Conditioning and Heater
Air Suspended Seat - Automatic Adjustment
Front and Rear Windshield Wiper/Washer
Dual Large Telescoping Outside Rear View Mirrors
Single Inside Rear View Mirror
Radio with AM/FM/CD/MP3/Bluetooth and 2 Audio Speakers and Antenna
3 Pin 12V Power Outlet
12V Cigarette Lighter Style Power Outlet
ISO 11783 9-Pin in Cab Connector
ISO 11786 7-Pin in Cab Connector

WHEELS AND TIRES
Rear 460/85R38 R1W Single Wheels
Front 380/85R28 R1W Single Waffle Wheels

OTHER STANDARD FEATURES
Auto-Steer Ready
AGCOMMAND™ Equipped w/ Antenna, Bracket, Harness & Telemetry Module, Includes: AGCOMMAND™ Advanced (1 Year Subscription, Must be activated within 12 months of warranty registration)
Lockable Tool Box
SMV Sign
Molded Rear Fenders
English Literature

(F.O.B. PORT OF ENTRY)

Order Code	Catalog Number	Description	Approx. Weight (lb.)	List Price

ONE *ORDER CODE* FROM EACH GROUP MUST BE SPECIFIED. (Unless In Base Option is desired)

BASE MACHINE

DYNA-6 EDITIONS-- Beauvais Built

MF7715~D6~EF~01	7295167	Massey 7715 Deluxe Tractor 120 PTO HP		155,521.00
MF7716~D6~EF~01	7295168	Massey 7716 Deluxe Tractor 125 PTO HP		161,591.00
MF7718~D6~EF~01	7295169	Massey 7718 Deluxe Tractor 135 PTO HP		167,661.00

DYNA-VT EDITIONS-- Beauvais Built

MF7715~DV~EF~01	7295173	Massey 7715 Deluxe Tractor 120 PTO HP		167,445.00
MF7716~DV~EF~01	7295174	Massey 7716 Deluxe Tractor 125 PTO HP		173,515.00
MF7718~DV~EF~01	7295175	Massey 7718 Deluxe Tractor 135 PTO HP		179,585.00

TRANSMISSION OPTIONS FOR DYNA-6 EDITIONS

FOR MF7715 AND MF7716

25-EA655	Base	6x4 Dyna-6 Transmission with 24F/24R gears . . . . 25 MPH (40 KPH) with Dynamic Tractor Management (DTM) Includes: Suspended Power Front Axle & Power Assisted Main Brakes	**In Base**
25-NA030	7295184	6x4 Dyna-6 Transmission with 24F/24R gears . . . . 25 MPH (40 KPH) with Dynamic Tractor Management (DTM) Includes: Non-Suspended Power Front Axle & Power Assisted Main Brakes	(4,877.00)
25-G1063	7295185	6X4 Dyna-6 Transmission with 24F/24R gears. . . . 31 MPH (50 KPH) with Dynamic Tractor Management (DTM). Includes: Suspended Power Front Axle & High Capacity Power Assist Brakes	2,318.00

FOR MF7718

25-EA655	Base	6x4 Dyna-6 Transmission with 24F/24R gears. . . . 25 MPH (40 KPH) with Dynamic Tractor Management (DTM) Includes: Suspended Power Front Axle & Power Assisted Main Brakes	**In Base**
25-NA030	7295186	6x4 Dyna-6 Transmission with 24F/24R gears . . . . 25 MPH (40 KPH) with Dynamic Tractor Management (DTM) Includes: Non-Suspended Power Front Axle & Power Assisted Main Brakes	(4,877.00)
25-G1063	7295187	6X4 Dyna-6 Transmission with 24F/24R gears . . . . 31 MPH (50 KPH) with Dynamic Tractor Management (DTM). Includes: Suspended Power Front Axle & High Capacity Power Assist Brakes	2,318.00

TRANSMISSION OPTIONS FOR DYNA-VT EDITIONS

FOR MF7715 AND MF7716

25-EA622	Base	Dyna-VT Transmission - 31 MPH (50 KPH) . . . . . Includes: Suspended Power Front Axle & High Capacity Power Assist Brakes	**In Base**
25-A7027	7295190	Dyna-VT Transmission - 25 MPH (40 KPH) . . . . . Includes: Non-Suspended Power Front Axle & Power Assisted Main Brakes	(6,204.00)

FOR MF7718

25-EA622	Base	Dyna-VT Transmission - 31 MPH (50 KPH) . . . . . Includes: Suspended Power Front Axle & High Capacity Power Assist Brakes	**In Base**
25-A7027	7295191	Dyna-VT Transmission - 25 MPH (40 KPH) . . . . . Includes: Non-Suspended Power Front Axle & Power Assisted Main Brakes	(6,204.00)

(F.O.B. PORT OF ENTRY)

Order Code	Catalog Number	Description	Approx. Weight (lb.)	List Price
AUXILIARY HYDRAULIC FLOW				
370-DP110	Base	29 gpm (110 L/min) Closed Center Load Sensing (CCLS) System		**In Base**
370-DP190	7293697	50 gpm (190 L/min) Closed Center Load Sensing . . . (CCLS) System (Only Available for Dyna-VT Models)		1,016.00
AUXILIARY VALVE 1 & 2				
50-KX011	Base	Valves 1 and 2 Electric, Fingertip Controlled Spool Valves Fingertips Located in Armrest		**In Base**
50-KX012	7293530	Valves 1 & 2 Electric with Multifunction . . . . . Joystick on the Armrest (Required when Choosing Factory Installed Loader Provisions (LL004 & LL005))		1,300.00
TO UTILIZE THE FACTORY INSTALLED MULTIFUNCTION JOYSTICK WITH A LOADER, THE TRACTOR MUST BE EQUIPPED WITH THE LOADER PROVISIONS FROM THE FACTORY.				
AUXILIARY VALVE 3 & 4				
55-MU012	Base	3rd and 4th Mechanically Controlled Valves, ... with levers located in Right Hand Console Kickout, Zero Leak, Flow Dividing, Float		**In Base**
55-MU003	7293532	3rd Valve only, Mechanically Controlled. . . . . with lever located in Right Hand Console Kickout, Zero Leak, Flow Dividing, Float		(1,136.00)
55-MU031	7293676	3rd and 4th Electric, Fingertip Controlled Valves . . . . with Fingertips located on Right Hand Console		1,358.00
POWER BEYOND				
90-GR010	Base	Power Beyond Couplers P/T/LS/D		**In Base**
90-GR000	7293665	Less Power Beyond		(716.00)
REAR AXLE				
DYNA-6				
60-EE402	Base	Short Bar Rear Axle, 80 in. (2028mm) Long, 3.23 in (82mm) Diameter		**In Base**
60-EE400	7293027	Flange Axle		(456.00)
60-EE404	7293026	Long Bar Rear Axle, 3.23 in (82mm) Diameter, ... 105 in (2672mm) Long (Requires Extremity Lights VE019)		925.00
DYNA-VT				
60-EE402	Base	Short Bar Rear Axle, 90 in. (2277mm) Long, ... 3.74 in. (95mm) Diameter		**In Base**
60-EE404	7293131	Long Bar Rear Axle, 118 in. (2997mm) long, ... 3.74 in. (95mm) Diameter (Requires Extremity Lights VE019)		925.00
REAR 3-POINT HITCH				
85-GC009	Base	Category 2/3 Telescopic Ball End Links		**In Base**
85-GC025	7293405	Category 3 Hook End Links, with Hook Style Links . . . and Cat 3/3 and Cat 2/3 Balls and Cones.		115.00

(F.O.B. PORT OF ENTRY)

Order Code	Catalog Number	Description	Approx. Weight (lb.)	List Price
INSTRUMENT PANEL / CONTROL CENTER DISPLAY (CCD)				
LESS AUTO-STEERING READY				
175-BA003	7293556	Analog and Digital Instrument Panel with Radar . . . . (For Actual Ground Speed) and Slip Control. No Control Center Display (CCD).		(5,119.00)
175-BA005	7293557	Analog and Digital Instrument Panel w/o Radar or Slip . Control. No Control Center Display (CCD).		(5,927.00)
175-BA008	7293563	Analog and Digital Instrument Panel, Control Center . . Display (CCD) with Video Input, Electric Valve Control, Radar with Slip Control and ISOBUS.		(145.00)
AUTO-STEERING READY				
175-Base	Base	Auto-Steer Ready, Analog and Digital Instrument Panel, Control Center Display (CCD) with Video Input, Electric Valve Control, Radar with Slip Control and ISOBUS. (Includes Roof Plate and Harness) *Order Auto-Guide™ 3000 TopDock Separately* *See Technology Section*		**In Base**
		Note: The Control Center Display (CCD) is required to utilize Auto-Guide™ 3000.		
AUTO-STEERING COMPLETE				
175-BA021	7293677	Analog and Digital Instrument Panel, Control Center . . Display (CCD) with Video Input, Electric Valve Control, and ISOBUS. Radar with Slip Control. Auto-Guide™ 3000 Sub-Meter (WAAS and OmniStar VBS) Auto Steering System. (Includes Roof Plate and Harness) (Requires SpeedSteer) Auto-Guide™ 3000 uses the Control Center Display (CCD).		6,216.00
SPEEDSTEER				
185-AD004	Base	SpeedSteer Option		**In Base**
185-AD002	7293558	Less SpeedSteer . . . . . (Not Available with Base or BA021 Instrument Control Panel)		(900.00)
TELEMETRY				
160-BS003	Base	AGCOMMAND™ Telemetry Module . . . . . (Antenna, Bracket and Harness) Includes: AGCOMMAND™ Advanced (1 Year Subscription)		**In Base**

(F.O.B. PORT OF ENTRY)

Order Code	Catalog Number	Description	Approx. Weight (lb.)	List Price

TIRES for 7715 and 7716

TIRE BRAND SELECTION

70-Blank	7294212	Factory Brand Choice	No Charge
70-T0001	7294195	Michelin Brand Required	1,615.00
70-T0007	7294197	Firestone Brand Required	1,205.00
70-T0010	7294198	Trelleborg Brand Required	1,205.00

FRONT AND REAR TIRES

FLANGE AXLE*

Rear: Single Pressed Steel Manual Adjust - Set of 2
Front: Waffle Wheel

75-W1297	7292864B1	Rear:	460/85R38 R1W (MI, FI, TR)	(1,394.00)
	7294786	Front:	380/85R28 R1W (MI, FI, TR)	
75-W1309	7292865B1	Rear:	520/85R38 R1W (MI, FI, TR)	(15.00)
	7293763	Front:	420/85R28 R1W (MI, FI, TR)	

Rear: Single Welded Pressed Steel - Set of 2
Front: Fixed Welded Steel Rim

75-W1478	7292873B1	Rear:	540/80R38 (Nokian Industrial)	8,927.00
	7293769	Front:	440/80R34 (Nokian Industrial)	
75-W1258	7292860B1	Rear:	650/65R38 R1W (MI, TR)	2,937.00
	7293759	Front:	540/65R28 R1W (MI, TR)	
75-W1299	7292897B1	Rear:	460/85R38 R1W (MI, FI, TR)	(1,394.00)
	7294786	Front:	380/85R28 R1W (MI, FI, TR)	
75-W1530	7292898B1	Rear:	520/85R38 R1W (MI, FI, TR)	(15.00)
	7293763	Front:	420/85R28 R1W (MI, FI, TR)	

****Flange Axles are not compatible with Dyna-VT Transmissions***

BAR AXLES- SHORT AND LONG

Rear: Single Welded Pressed Steel - Set of 2
Front: Fixed Welded Steel Rim

75-W1670	7294899B4	Rear:	540/65R38 R1W (MI, TR)	(642.00)
	7293757	Front:	440/65R28 R1W (MI, TR)	
75-W1572	7294894B4	Rear:	600/65R38 R1W (MI, TR)	(72.00)
	7294785	Front:	480/65R28 R1W (MI, TR)	
75-W1673	7294905B4	Rear:	540/80R38 (Nokian Industrial)	8,936.00
	7293769	Front:	440/80R28 (Nokian Industrial)	
75-W1262	7294895B4	Rear:	650/65R38 R1W (MI, TR)	2,948.00
	7293759	Front:	540/65R28 R1W (MI, TR)	

(F.O.B. PORT OF ENTRY)

TIRES for 7715 and 7716

FRONT AND REAR TIRES - CONTINUED

Order Code	Catalog Number	Description	Approx. Weight (lb.)	List Price
		BAR AXLES- SHORT AND LONG		
		Rear: Single Semi Dished Cast Centers- Set of 2		
		Front: Waffle Wheel		
75-Base	7294897B4	Rear: 460/85R38 R1W (18.4R38) (MI, FI, TR)		**In Base**
	7294786	Front: 380/85R28 R1W (14.9R28) (MI, FI, TR)		
75-W1533	7294893B4	Rear: 520/85R38 R1W (MI, FI, TR)		2,743.00
	7293763	Front: 420/85R28 R1W (MI, FI, TR)		
75-W1377	7294882B4	Rear: 480/80R42 R1W* (MI, TR)		1,426.00
	7293764	Front: 380/85R30 R1W* (MI, TR)		
75-W1318	7294883B4	Rear: 380/90R46 R1W* (MI)		1,431.00
	7293764	Front: 380/85R30 R1W* (MI)		
75-W1384	7294882B4	Rear: 480/80R42 R1W (MI, TR)		2,066.00
	7293763	Front: 420/85R28 R1W (MI, TR)		
75-W1409	7294884B4	Rear: 420/80R46 R1W* (MI)		2,126.00
	7293764	Front: 380/85R30 R1W* (MI)		
		BAR AXLES- LONG		
		Rear: Dual Cast Inner / Steel Outer - Set of 4		
		Front: Waffle Wheel		
75-W1374	7294898B4	Duals: 460/85R38 R1W (MI, TR, FI)		7,174.00
	7294786	Front: 380/85R28 R1W (MI, TR, FI)		
75-W1379	7294887B4	Duals: 380/90R46 R1W (MI)		8,877.00
	7293764	Front: 380/85R30 R1W (MI)		
75-W1380	7294886B4	Duals: 480/80R42 R1W* (MI, TR)		8,147.00
	7293764	Front: 380/85R30 R1W* (MI, TR)		
75-W1386	7294886B4	Duals: 480/80R42 R1W (MI, TR)		8,787.00
	7293763	Front: 420/85R28 R1W (MI, TR)		
75-W1410	7294888B4	Duals: 420/80R46 R1W* (MI)		9,839.00
	7293764	Front: 380/85R30 R1W* (MI)		
		Rear: Dual Cast Inner / Cast Outer - Set of 4		
		Front: Waffle Wheel		
75-W1408	7294925B4	Duals: 380/90R46 R1W (MI)		8,980.00
	7293764	Front: 380/85R30 R1W (MI)		
75-W1412	7294926B4	Duals: 420/80R46 R1W* (MI)		9,942.00
	7293764	Front: 380/85R30 R1W* (MI)		
75-W1407	7294927B4	Duals: 480/80R42 R1W* (MI, TR)		8,250.00
	7293764	Front: 380/85R30 R1W* (MI, TR)		
75-W1405	7294927B4	Duals: 480/80R42 R1W (MI, TR)		8,890.00
	7293763	Front: 420/85R28 R1W (MI, TR)		

NOTE: OUTER CAST WHEEL WILL ALLOW FOR 120" TREAD SETTING ON 82MM LONG BAR AXLE

*** FIRESTONE TREAD TYPE IS R1**

(F.O.B. PORT OF ENTRY)

Order Code	Catalog Number	Description	Approx. Weight (lb.)	List Price

TIRES for 7718

TIRE BRAND SELECTION

70-Blank	7294212	Factory Brand Choice	No Charge
70-T0001	7294195	Michelin Brand Required	1,615.00
70-T0007	7294197	Firestone Brand Required	1,205.00
70-T0010	7294198	Trelleborg Brand Required	1,205.00

FRONT AND REAR TIRES

FLANGE AXLE*

Rear: Single Pressed Steel Manual Adjust - Set of 2
Front: Waffle Wheel

75-W1297	7292864B1	Rear:	460/85R38 R1W (MI, FI, TR)	(1,394.00)
	7293762B2	Front:	380/85R28 R1W (MI, FI, TR)	
75-W1309	7292865B1	Rear:	520/85R38 R1W (MI, FI, TR)	(15.00)
	7294762B2	Front:	420/85R28 R1W (MI, FI, TR)	

Rear: Single Welded Pressed Steel - Set of 2
Front: Fixed Welded Steel Rim

75-W1478	7292873B1	Rear:	540/80R38 (Nokian Industrial)	8,927.00
	7294791B2	Front:	440/80R28 (Nokian Industrial)	
75-W1258	7292860B1	Rear:	650/65R38 R1W (MI, TR)	2,937.00
	7294783B2	Front:	540/65R28 R1W (MI, TR)	
75-W1299	7292897B1	Rear:	460/85R38 R1W (MI, FI, TR)	(1,394.00)
	7293762B2	Front:	380/85R28 R1W (MI, FI, TR)	
75-W1530	7292898B1	Rear:	520/85R38 R1W (MI, FI, TR)	(15.00)
	7294762B2	Front:	420/85R28 R1W (MI, FI, TR)	

****Flange Axles are not compatible with Dyna-VT Transmissions***

BAR AXLES- SHORT AND LONG

Rear: Single Welded Pressed Steel - Set of 2
Front: Fixed Welded Steel Rim

75-W1670	7294899B4	Rear:	540/65R38 R1W (MI, TR)	(642.00)
	7294784B2	Front:	440/65R28 R1W (MI, TR)	
75-W1572	7294894B4	Rear:	600/65R38 R1W (MI, FI, TR)	(72.00)
	7293758B2	Front:	480/65R28 R1W (MI, FI, TR)	
75-W1673	7294905B4	Rear:	540/80R38 (Nokian Industrial)	8,936.00
	7294791B2	Front:	440/80R28 (Nokian Industrial)	
75-W1262	7294895B4	Rear:	650/65R38 R1W (MI, TR)	2,948.00
	7294783B2	Front:	540/65R28 R1W (MI, TR)	

(F.O.B. PORT OF ENTRY)

TIRES for 7718

FRONT AND REAR TIRES - CONTINUED

Order Code	Catalog Number	Description	Approx. Weight (lb.)	List Price
		BAR AXLES- SHORT AND LONG		
		Rear: Single Semi Dished Cast Centers- Set of 2		
		Front: Waffle Wheel		
75-Base	7294897B4	Rear: 460/85R38 R1W (18.4R38) (MI, FI, TR)		**In Base**
	7293762B2	Front: 380/85R28 R1W (14.9R28) (MI, FI, TR)		
75-W1533	7294893B4	Rear: 520/85R38 R1W (MI, FI, TR)		2,743.00
	7294762B2	Front: 380/85R28 R1W (MI, FI, TR)		
75-W1394	7294885B4	Rear: 320/90R50 R1W (MI)		1,594.00
	7294769B2	Front: 320/85R34 R1W (MI)		
75-W1377	7294882B4	Rear: 480/80R42 R1W* (MI, TR)		1,426.00
	7293764B2	Front: 380/85R30 R1W* (MI, TR)		
75-W1318	7294883B4	Rear: 380/90R46 R1W* (MI)		1,431.00
	7293764B2	Front: 380/85R30 R1W* (MI)		
75-W1384	7294882B4	Rear: 480/80R42 R1W (MI, TR)		2,066.00
	7294762B2	Front: 420/85R28 R1W (MI, TR)		
75-W1409	7294884B4	Rear: 420/80R46 R1W* (MI)		2,126.00
	7294765B2	Front: 380/85R30 R1W* (MI)		
		BAR AXLES- LONG		
		Rear: Dual Cast Inner / Steel Outer - Set of 4		
		Front: Waffle Wheel		
75-W1374	7294898B4	Duals: 460/85R38 R1W (MI, TR, FI)		7,174.00
	7293762B2	Front: 380/85R28 R1W (MI, TR, FI)		
75-W1379	7294887B4	Duals: 380/90R46 R1W (MI)		8,877.00
	7293764B2	Front: 380/85R30 R1W (MI)		
75-W1380	7294886B4	Duals: 480/80R42 R1W* (MI, TR)		8,147.00
	7293764B2	Front: 380/85R30 R1W* (MI, TR)		
75-W1386	7294886B4	Duals: 480/80R42 R1W (MI, TR)		8,787.00
	7294762B2	Front: 420/85R28 R1W (MI, TR)		
75-W1410	7294888B4	Duals: 420/80R46 R1W* (MI)		9,839.00
	7294765B2	Front: 380/85R30 R1W* (MI)		
75-W1395	7294889B4	Duals: 320/90R50 R1W (MI)		9,879.00
	7294769B2	Front: 320/85R34 R1W (MI)		
		Rear: Dual Cast Inner / Cast Outer - Set of 4		
		Front: Waffle Wheel		
75-W1408	7294925B4	Duals: 380/90R46 R1W (MI)		8,980.00
	7294765B2	Front: 380/85R30 R1W (MI)		
75-W1412	7294926B4	Duals: 420/80R46 R1W* (MI)		9,942.00
	7294765B2	Front: 380/85R30 R1W* (MI)		
75-W1407	7294927B4	Duals: 480/80R42 R1W* (MI, TR)		8,250.00
	7294765B2	Front: 380/85R30 R1W* (MI, TR)		
75-W1405	7294927B4	Duals: 480/80R42 R1W (MI, TR)		8,890.00
	7294762B2	Front: 420/85R28 R1W (MI, TR)		

NOTE: OUTER CAST WHEEL WILL ALLOW FOR 120" TREAD SETTING ON 82MM LONG BAR AXLE

*** FIRESTONE TREAD TYPE IS R1**

(F.O.B. PORT OF ENTRY)

Order Code	Catalog Number	Description	Approx. Weight (lb.)	List Price
PTO				
DYNA-6				
100-LC002	Base	540/540E/1000/1000E Exchangeable Shaft . . . . . 540 RPM 6 Spline and 1000 RPM 21 Spline with Economy PTO		**In Base**
DYNA-VT				
100-Base	Base	540/540E/1000/1000E RPM Flanged PTO with one 6 Spline Shaft and one 21 Spline Shaft, with In-Cab Controls		**In Base**
FRONT HITCH				
230-FA000	Base	Less Front Hitch		**In Base**
230-F1132	7293594	2800 kg Front Linkage w/ 1 Set of Hydraulic Couplers .		6,376.00
230-F1154	7295193	2800 kg Front Linkage w/ 1 Set of Hydraulic Couplers . with Belly Weight		7,231.00
230-F1155	7295194	2800 kg Front Linkage w/ 1 Set of Hydraulic Couplers . Cylinders with 1 Set of Hydraulic Couplers with Front PTO (21 Spline Anti-Clockwise)		13,240.00
230-F1143	7295195	2800 kg Front Linkage, Double Acting Cylinders . . . . with 2 Sets of Front Hydraulic Couplers with Pressure Drain		4,953.00
230-F1156	7295196	2800 kg Front Linkage, Double Acting Cylinders . . . . with 2 Sets of Front Hydraulic Couplers with Pressure Drain with Belly Weight		5,850.00
230-F1157	7295197	2800 kg Front Linkage, Double Acting Cylinders . . . . with 2 Sets of Front Hydraulic Couplers with Pressure Drain with Front PTO (21 Spline Anti-Clockwise)		14,465.00
LOADER PROVISION				
350-LL000	Base	Less Loader Provisions.		**In Base**
350-LL004	7293484	Front Loader Provisions including Hydraulics, Subframe **Requires: Valves 1 and 2 Electric with a Joystick (KX012)**		6,029.00
350-LL005	7295249	Front Loader Provision w/ Live 3rd-SMS Loader Control **Requires: Valves 1 and 2 Electric with a Joystick (KX012) and Less Front Hitch**		7,500.00

TO UTILIZE THE FACTORY INSTALLED MULTIFUNCTION JOYSTICK WITH A LOADER, THE TRACTOR MUST BE EQUIPPED WITH THE LOADER PROVISIONS FROM THE FACTORY.

RADIO				
365-AF011	Base	Radio (CD Player, MP3 compatible), Antenna and Speakers		**In Base**
365-AF009	7294249	Radio, AM/FM, MP3 Compatible		(110.00)
365-AF001	7295157	Antenna and Speakers		(195.00)
CAB				
125-AE042	7293546	Superluxe Grammar Seat		1,792.00
145-AL009	7293547	Telescopic Large Side Mirrors with Electric . . . . . De-Icing and Adjustment (Not for with Visio Roof, E1022)		467.00
120-AQ004	7293082	Automatic Climate Control . . . . . (Not for use with Visio Roof, E1022)		1,245.00
140-AI020	7293077	Standard Cab Roof with Roof Hatch		273.00
140-E1022	7293078	Visio roof . . . . . Not Compatible with: Mirrors (AL009) Automatic Climate Control (AQ004) 2 Front and 2 Rear Xenon Work Lights (VG078) Instrument Control Panel (Auto Steering Ready) (**In Base**) Instrument Control Panel (Auto Steering Complete) (BA021)		1,586.00

(F.O.B. PORT OF ENTRY)

Order Code	Catalog Number	Description	Approx. Weight (lb.)	List Price
FRONT WEIGHTS				
285-YA112	7293487	121 LBS (55 KGS) Front Weights, Set of 12 . . . . . with Hardware - total Weight 1,455 LBS (660 KGS)		2,295.00
REAR WHEEL WEIGHTS				
325-RD040	7294192*	551 LBS (250 KGS) Weights, Set of 2 . . . . . Mounts Externally to Wheel	1102	1,845.00
325-RD041	7294200*	551 LBS (250 KGS) Weights, Set of 4 . . . . . Mounts Externally to Wheel	2204	3,689.00
		***NOT COMPATIBLE WITH MANUAL ADJUST FLANGE AXLE RIMS**		
BELLY AND HITCH WEIGHTS				
245-YD001	7293374	1 Belly Weight - 584 LBS (265 KGS) . . . . . (For use **WITHOUT** Front 3-Point Hitch)	584	1,490.00
345-YB003*	7294270	1,874 lbs (850 kg) Monoblock Weight.		3,406.00
345-YB004*	7294271	3,307 lbs (1500 kg) Monoblock Weight		5,677.00
***NOT COMPATIBLE WITH FRONT WEIGHTS**				
ELECTRICAL				
215-CB002	Base	Engine Block Heater - 110 Volt		**In Base**
215-CB000	7293593	Less Engine Block Heater.		(204.00)
ALTERNATOR				
220-CE019	Base	Twin 120 AMP Alternators.		**In Base**
220-CE020	7293561	175 AMP Alternator. . . . . (Not Available with ISOBUS)		(380.00)
LIGHTING				
205-VF013	7293103	Dual Roof-Mounted Rotating Beacons, Left and Right . (Includes SAE SMV sign)		522.00
195-VG078	7295103	2 Front and 2 Rear Xenon Work Lights.. . . . . Xenon Bulb for Brighter Lights and Longer Bulb Life		3,392.00
360-VE019	7293476	Extremity Lighting		756.00

(F.O.B. PORT OF ENTRY)

Order Code	Catalog Number	Description	Approx. Weight (lb.)	List Price
PIVOTING FRONT FENDERS				
155-WE110	Base	Pivoting Front Fenders - Standard Width . . . . . Width depends on tire selection; see Chart Below		**In Base**
155-WE000	7294247	Less Front Fenders		(95.00)
155-WE111	7293598	Pivoting Front Fenders - Wide Width . . . . . Width depends on tire selection; see Chart Below		120.00

Fender Size		
Standard	**Wide**	**Tire Sizes**
12.6" (320) mm	13.9" (355) mm	320/85R34 (12.4R34)
13.9" (355) mm	14.9" (380) mm	340/85R24 (13.6R24) 340/85R28 (13.6R28)
14.9" (380) mm	16.1" (410) mm	380/85R28 (14.9R28) 380/85R30 (14.9R30) 400/80R24 400/80R28
16.1" (410) mm	18.5" (470) mm	420/85R28 (16.9R28) 440/65R28
18.5" (470) mm	20.4" (520) mm	440/80R28 480/65R28
20.4" (520) mm	24.4" (620) mm	540/65R28

REAR FENDERS				
255-WD012	Base	Rear Fenders without Extensions, 78.74"(2.00 M) . . .		**In Base**
255-WD017	7293107	Wide Fender -90.55" (2.3 M) with Rear Extension . . .		1,323.00
255-WD020	7293109	Extra Wide Fender -100.4" (2.55 M) . . . . . with Rear Extension		1,464.00

(F.O.B. PORT OF ENTRY)

Order Code	Catalog Number	Description	Approx. Weight (lb.)	List Price
MISCELLANEOUS				
35-EN002	7293402	14:1:1 Super Creeper Reduction Gear . . . . . (**Available on Dyna-6 Editions Only)** Requires: Less Front Hitch (FA000) and Suspended Front Axle		2,907.00
250-GS001	7293100	Hydraulic Trailer Brakes		817.00
250-GS067	7293552	Pneumatic & Hydraulic Trailer Brakes.		7,508.00
225-LQ001	7293553	Water Separator (Fuel Filter)		466.00
275-TC005	7294210	French Language OIB.		No Charge
275-TC011	7294211	Spanish Language OIB		No Charge
DEALER INSTALLED OPTIONS				
FRONT WEIGHTS				
	5020186M	8 x 55kg (121 lbs.) Front Weights	968	1,545.00
	5020187M	10 x 55kg (121 lbs.) Front Weights	1210	1,913.00
	5020188M	12 x 55kg (121 lbs.) Front Weights	1452	2,295.00
	5020189M	14 x 55kg (121 lbs.) Front Weights	1694	2,678.00
	5020190M	16 x 55 kg (121 lbs.) Front Weights	1936	3,060.00
REAR WEIGHT PACKAGE				
	5020202M	Additional Rear Wheel Weight Package - . . . . . set of 2 x 250kg (550 lbs) 250kg Weight Weight can be mounted onto Cast Center or previously installed 250kg Cast Weight		2,029.00

7700 SMALL FRAME PREMIUM EDITION

MASSEY FERGUSON®

(F.O.B. PORT OF ENTRY)

PREMIUM EDITION FEATURES

ENGINE
7715/7716/7718
7715: 140 Rated Engine HP, 120 PTO HP
7716: 150 Rated Engine HP, 125 PTO HP
7718: 165 Rated Engine HP, 135 PTO HP

AGCO POWER™ 6.6L (403 cu in.) 6 Cylinder, Tier 4f Compliant
- SCR Technology
- Air-to-Air Aftercooled, Common Rail Injection, Turbocharged

Electronic Engine Management (EEM) with Dual ERPM Settings
Electronic Controlled Viscous Fan Drive
Dual Element Dry Type Air Cleaner
Vertical Exhaust at Right Front Cab Post
Cooling System: Antifreeze to Minus 30°F(-34°C)
Fuel Tank Capacity: 82 Gal (310L)
DEF Tank Capacity: 8 Gal (30L)

POWERTRAIN
7715/7716/7718: Dyna-VT
- Continuously Variable Transmission, 60 ft/h to 31 MPH (18.2 Meters/h to 50 KPH)
- Dynamic Tractor Management (DTM) with Two Programmable Cruise Speeds
- Short Bar Rear Axle, 90 In. (2277mm) Long, 3.74 in. (95mm) Diameter

7715/7716/7718: Dyna-6 Transmission
- 24F/24R Semi-Powershift, 4 Ranges with 6 Powershifts per Range 50 kph (31 mph) max speed
- Dynamic Tractor Management (DTM) with Two Programmable Cruise Speeds
- Short Bar Rear Axle, 80 in. (2028mm) Long, 3.23 in. (82mm) Diameter

Multi-Disc Wet Brakes
Power Differential Lock
Independent PTO:
Dyna-VT: 540/540E/1000/1000E RPM Flanged Shaft, 540 with 6 Spline and 1000 with 21 Spline
Dyna-6: 540/540E/1000/1000E Exchangeable Shaft, 540 with 6 Spline and 1000 with 21 Spline with Electric Control
Rear Fender Mounted PTO Shut-Off
SV1 & SV2 Settings

FRONT WHEEL ASSIST AXLE
Power Front Axle (PFA)
8 Bolt Pattern: 7715 / 7716 Dyna-6 and Dyna-VT
10 Bolt Pattern: 7718 Dyna-6 and Dyna-VT
Suspended Front Axle
Shielded Center Drive Line with Electro-Hydraulic Control & Front Wheel Drive Differential Lock
55 Degree Steering Angle
SpeedSteer
Pivoting Front Fenders

HYDRAULICS
Closed Center Load Sensing 29 gpm (110 L/Min) Pump
2900 PSI (200 Bar) Maximum Pressure
4 Electric Valves - Fingertip Controlled, 2 Located on Armrest, 2 Located Right Hand Console
Hydrostatic Power Steering
Power Beyond
Fender Control for One Valve

HITCH
3 Point Hitch: Category 2/3 Linkage Ball Ends
Active Transport Control
Lower Link Sensing
Electronic Draft Control, Electronic Height Control, & Rate of Drop
Variable Float Telescopic Stabilizers
Left and Right Side External 3 Point Control
Drawbar: Category 2, Clevis and Drop Pin

ELECTRICAL SYSTEM
2 – 120 Amp Alternators
2 – 12V Batteries, 600 CCA Each (SAE)
7 Pin ASAE Rear Trailer Electrical Outlet
Electrical Isolator Switch and Jumpstart Point
110V Engine Block Heater
Ignition with Neutral Start and Key Shutoff

LIGHTING
8 Front Hood Mounted Lights
Four Front Single Bulb Worklights
Two Rear Double Bulb Worklights
Two Field Lights on Hand Rails and Rear Fenders with Taillights, Flashing Warning Lights, and Turn Signals

INSTRUMENTS
Control Center Display (CCD)
- Video Input
- Electric Valve Control
- ISOBUS Compliant

Radar with Slip Control
Tachometer: Digital and Analog
PTO Speed: Digital
Ground Speed Display: Digital
Fuel Level, DEF Level, and Coolant Temp Gauges
Warning/Information Lights

OPERATOR AREA
Instructor Seat with Seat Belt
Mechanical Cab Suspension
6 Post Cab
Transmission Control Multi-controller on Armrest
Adjustable Steering Column
Front Sun Visor
Automatic Climate Control
Air Suspended Seat - Automatic Adjustment
Front and Rear Windshield Wiper/Washer
Dual Large Telescoping Outside Rear View Mirrors with De-Icing.
Single Inside Rear View Mirror
Radio with AM/FM/CD/MP3/Bluetooth and 2 Audio Speakers and Antenna
3 Pin 12V Power Outlet
12V Cigarette Lighter Style Power Outlet
ISO 11783 9-Pin in Cab Connector
ISO 11786 7-Pin in Cab Connector

WHEELS AND TIRES
Rear 460/85R38 R1W Single Wheels
Front 380/85R28 R1W Single Waffle Wheels

OTHER STANDARD FEATURES
Auto-Steer Complete: Auto-Guide™ 3000 Sub-Meter (WAAS and OmniStar VBS)
Auto Steering System using the Control Center Display (CCD)
AGCOMMAND™ Equipped w/ Antenna, Bracket, Harness & Telemetry Module, Includes: AGCOMMAND™ Advanced (1 Year Subscription, Must be activated within 12 months of warranty registration)
Lockable Tool Box
SMV Sign
Molded Rear Fenders
English Literature

(F.O.B. PORT OF ENTRY)

Order Code	Catalog Number	Description	Approx. Weight (lb.)	List Price

ONE *ORDER CODE* FROM EACH GROUP MUST BE SPECIFIED. (Unless In Base Option is desired)

BASE MACHINE

DYNA-6 EDITIONS-- Beauvais Built

MF7715~D6~EX~02	7295170	Massey 7715 Premium Tractor 120 PTO HP	166,651.00
MF7716~D6~EX~02	7295171	Massey 7716 Premium Tractor 125 PTO HP	172,721.00
MF7718~D6~EX~02	7295172	Massey 7718 Premium Tractor 135 PTO HP	178,791.00

DYNA-VT EDITIONS-- Beauvais Built

MF7715~DV~EX~02	7295176	Massey 7715 Premium Tractor 110 PTO HP	178,001.00
MF7716~DV~EX~02	7295177	Massey 7716 Premium Tractor 125 PTO HP	184,071.00
MF7718~DV~EX~02	7295178	Massey 7718 Premium Tractor 135 PTO HP	190,142.00

TRANSMISSION OPTIONS FOR DYNA-6 EDITIONS

FOR MF7715 AND MF7716

25-EA656	Base	6x4 Dyna-6 Transmission with 24F/24R gears . . . . 31 MPH (50 KPH) with Dynamic Tractor Management (DTM) Includes: Suspended Power Front Axle & High Capacity Power Assist Brakes	**In Base**
25-G1064	7295188	6X4 Dyna-6 Transmission with 24F/24R gears . . . . 25 MPH (40 KPH) with Dynamic Tractor Management (DTM). Includes: Suspended Power Front Axle & Power Assisted Main Brakes	(1,327.00)

FOR MF7718

25-EA656	Base	6x4 Dyna-6 Transmission with 24F/24R gears. . . . 31 MPH (50 KPH) with Dynamic Tractor Management (DTM) Includes: Suspended Power Front Axle & High Capacity Power Assist Brakes	**In Base**
25-G1064	7295189	6X4 Dyna-6 Transmission with 24F/24R gears. . . . 25 MPH (40 KPH) with Dynamic Tractor Management (DTM). Includes: Suspended Power Front Axle & Power Assisted Main Brakes	(1,327.00)

TRANSMISSION OPTIONS FOR DYNA-VT EDITIONS

25-EA622	Base	Dyna-VT Transmission - 31 MPH (50 KPH) . . . . . Includes: Suspended Power Front Axle & High Capacity Power Assist Brakes	**In Base**

(F.O.B. PORT OF ENTRY)

Order Code	Catalog Number	Description	Approx. Weight (lb.)	List Price
AUXILIARY HYDRAULIC FLOW				
370-DP110	Base	29 gpm (110 L/min) Closed Center Load Sensing (CCLS) System		**In Base**
370-DP190	7293697	50 gpm (190 L/min) Closed Center Load Sensing . . . (CCLS) System (Only Available for Dyna-VT Models)		1,016.00
AUXILIARY VALVE 1 & 2				
50-KX011	Base	Valves 1 and 2 Electric, Fingertip Controlled Spool Valves Fingertips Located in Armrest		**In Base**
50-KX012	7293530	Valves 1 & 2 Electric with Multifunction . . . . . Joystick on the Armrest (Required when Choosing Factory Installed Loader Provisions (LL004))		1,300.00
TO UTILIZE THE FACTORY INSTALLED MULTIFUNCTION JOYSTICK WITH A LOADER, THE TRACTOR MUST BE EQUIPPED WITH THE LOADER PROVISIONS FROM THE FACTORY.				
AUXILIARY VALVE 3 & 4				
55-MU031	Base	3rd and 4th Electric, Fingertip Controlled Valves . . . . with Fingertips located on Right Hand Console		**In Base**
55-MU041	7293534	3rd, 4th & 5th Fingertip Controlled Electric Spool Valve. (Fingertips located on Right Hand Console)		1,848.00
POWER BEYOND				
90-GR010	Base	Power Beyond Couplers P/T/LS/D		**In Base**
90-GR000	7293665	Less Power Beyond		(716.00)
REAR AXLE				
DYNA-6				
60-EE402	Base	Short Bar Rear Axle, 80 in. (2028mm) Long, 3.23 in (82mm) Diameter		**In Base**
60-EE400	7293027	Flange Axle		(456.00)
60-EE404	7293026	Long Bar Rear Axle, 3.23 in (82mm) Diameter, ... 105 in (2672mm) Long (Requires Extremity Lights VE019)		925.00
DYNA-VT				
60-EE402	Base	Short Bar Rear Axle, 90 in. (2277mm) Long, ... 3.74 in. (95mm) Diameter		**In Base**
60-EE404	7293131	Long Bar Rear Axle, 118 in. (2997mm) long, ... 3.74 in. (95mm) Diameter (Requires Extremity Lights VE019)		925.00
REAR 3-POINT HITCH				
85-GC009	Base	Category 2/3 Telescopic Ball End Links		**In Base**
85-GC025	7293405	Category 3 Hook End Links, with Hook Style Links . . . and Cat 3/3 and Cat 2/3 Balls and Cones.		115.00
REAR THREE POINT STABILIZERS				
165-Base	Base	Variable Float Telescopic Stabilizers		**In Base**

(F.O.B. PORT OF ENTRY)

Order Code	Catalog Number	Description	Approx. Weight (lb.)	List Price
INSTRUMENT PANEL / CONTROL CENTER DISPLAY (CCD)				
LESS AUTO-STEERING READY				
175-BA008	7293679	Analog and Digital Instrument Panel, Control Center . . Display (CCD) with Video Input, Electric Valve Control, Radar with Slip Control and ISOBUS.		(4,973.00)
AUTO-STEERING READY				
175-BA012	7293678	Auto-Steer Ready, Analog & Digital Instrument Panel . Control Center Display (CCD) with Video Input, Electric Valve Control, Radar with Slip Control and ISOBUS. (Includes Roof Plate and Wiring Harness) *Order Auto-Guide™ 3000 TopDock Separately* *See Technology Section*		(4,828.00)
		Note: The Control Center Display (CCD) is required to utilize Auto-Guide™ 3000.		
AUTO-STEERING COMPLETE				
175-BA021	Base	Analog and Digital Instrument Panel, Control Center . . Display (CCD) with Video Input, Electric Valve Control, and ISOBUS. Radar with Slip Control. Auto-Guide™ 3000 Sub-Meter (WAAS and OmniStar VBS) Auto Steering System. (Includes Roof Plate and Wiring Harness) (Requires SpeedSteer) Auto-Guide™ 3000 uses the Control Center Display (CCD).		**In Base**
SPEEDSTEER				
185-AD004	Base	SpeedSteer Option		**In Base**
185-AD002	7293558	Less SpeedSteer Option . . . . . (Not Available with BA012 and Base Instrument Control Panel)		(900.00)
TELEMETRY				
160-BS003	Base	AGCOMMAND™ Telemetry Module . . . . . (Antenna, Bracket and Harness) Includes: AGCOMMAND™ Advanced (1 Year Subscription)		**In Base**

(F.O.B. PORT OF ENTRY)

TIRES for 7715 and 7716

TIRE BRAND SELECTION

Order Code	Catalog Number	Description	Approx. Weight (lb.)	List Price
70-Blank	7294212	Factory Brand Choice		No Charge
70-T0001	7294195	Michelin Brand Required		1,615.00
70-T0007	7294197	Firestone Brand Required		1,205.00
70-T0010	7294198	Trelleborg Brand Required		1,205.00

FRONT AND REAR TIRES

FLANGE AXLE*

Rear: Single Pressed Steel Manual Adjust - Set of 2
Front: Waffle Wheel

75-W1297	7292864B1	Rear:	460/85R38 R1W (MI, FI, TR)	(1,394.00)
	7294786	Front:	380/85R28 R1W (MI, FI, TR)	
75-W1309	7292865B1	Rear:	520/85R38 R1W (MI, FI, TR)	(15.00)
	7293763	Front:	420/85R28 R1W (MI, FI, TR)	

Rear: Single Welded Pressed Steel - Set of 2
Front: Fixed Welded Steel Rim

75-W1478	7292871B1	Rear:	540/80R38 (Nokian Industrial)	8,927.00
	7293769	Front:	440/80R34 (Nokian Industrial)	
75-W1258	7292860B1	Rear:	650/65R38 R1W (MI, TR)	2,937.00
	7293759	Front:	540/65R28 R1W (MI, TR)	
75-W1299	7292864B1	Rear:	460/85R38 R1W (MI, FI, TR)	(1,394.00)
	7294786	Front:	380/85R28 R1W (MI, FI, TR)	
75-W1530	7292898B1	Rear:	520/85R38 R1W (MI, FI, TR)	(15.00)
	7293763	Front:	420/85R28 R1W (MI, FI, TR)	

***Flange Axles are not compatible with Dyna-VT Transmissions**

BAR AXLES- SHORT AND LONG

Rear: Single Welded Pressed Steel - Set of 2
Front: Fixed Welded Steel Rim

75-W1670	7294899B4	Rear:	540/65R38 R1W (MI, TR)	(642.00)
	7293757	Front:	440/65R28 R1W (MI, TR)	
75-W1572	7294894B4	Rear:	600/65R38 R1W (MI, TR)	(72.00)
	7294785	Front:	480/65R28 R1W (MI, TR)	
75-W1673	7294905B4	Rear:	540/80R38 (Nokian Industrial)	8,936.00
	7293769	Front:	440/80R28 (Nokian Industrial)	
75-W1262	7294895B4	Rear:	650/65R38 R1W (MI, TR)	2,948.00
	7293759	Front:	540/65R28 R1W (MI, TR)	

(F.O.B. PORT OF ENTRY)

Order Code	Catalog Number	Description	Approx. Weight (lb.)	List Price

TIRES for 7715 and 7716

FRONT AND REAR TIRES - CONTINUED

BAR AXLES- SHORT AND LONG

Rear: Single Semi Dished Cast Centers- Set of 2
Front: Waffle Wheel

75-Base	7294897B4 7294786	Rear: Front:	460/85R38 R1W (18.4R38) (MI, FI, TR) 380/85R28 R1W (14.9R28) (MI, FI, TR)	**In Base**
75-W1533	7294893B4 7293763	Rear: Front:	520/85R38 R1W (MI, FI, TR) 420/85R28 R1W (MI, FI, TR)	2,743.00
75-W1377	7294882B4 7293764	Rear: Front:	480/80R42 R1W* (MI, TR) 380/85R30 R1W* (MI, TR)	1,426.00
75-W1318	7294883B4 7293764	Rear: Front:	380/90R46 R1W* (MI) 380/85R30 R1W* (MI)	1,431.00
75-W1384	7294882B4 7293763	Rear: Front:	480/80R42 R1W (MI, TR) 420/85R28 R1W (MI, TR)	2,066.00
75-W1409	7294884B4 7293764	Rear: Front:	420/80R46 R1W* (MI) 380/85R30 R1W* (MI)	2,126.00

BAR AXLES- LONG

Rear: Dual Cast Inner / Steel Outer - Set of 4
Front: Waffle Wheel

75-W1374	7294898B4 7294786	Duals: Front:	460/85R38 R1W (MI, TR, FI) 380/85R28 R1W (MI, TR, FI)	7,174.00
75-W1379	7294887B4 7293764	Duals: Front:	380/90R46 R1W (MI) 380/85R30 R1W (MI)	8,877.00
75-W1380	7294886B4 7293764	Duals: Front:	480/80R42 R1W* (MI, TR) 380/85R30 R1W* (MI, TR)	8,147.00
75-W1386	7294886B4 7293763	Duals: Front:	480/80R42 R1W (MI, TR) 420/85R28 R1W (MI, TR)	8,787.00
75-W1410	7294888B4 7293764	Duals: Front:	420/80R46 R1W* (MI) 380/85R30 R1W* (MI)	9,839.00

Rear: Dual Cast Inner / Cast Outer - Set of 4
Front: Waffle Wheel

75-W1408	7294925B4 7293764	Duals: Front:	380/90R46 R1W (MI) 380/85R30 R1W (MI)	8,980.00
75-W1412	7294926B4 7293764	Duals: Front:	420/80R46 R1W* (MI) 380/85R30 R1W* (MI)	9,942.00
75-W1407	7294927B4 7293764	Duals: Front:	480/80R42 R1W* (MI, TR) 380/85R30 R1W* (MI, TR)	8,250.00
75-W1405	7294927B4 7293763	Duals: Front:	480/80R42 R1W (MI, TR) 420/85R28 R1W (MI, TR)	8,890.00

NOTE: OUTER CAST WHEEL WILL ALLOW FOR 120" TREAD SETTING ON 82MM LONG BAR AXLE

*** FIRESTONE TREAD TYPE IS R1**

(F.O.B. PORT OF ENTRY)

TIRES for 7718

TIRE BRAND SELECTION

Order Code	Catalog Number	Description	Approx. Weight (lb.)	List Price
70-Blank	7294212	Factory Brand Choice		No Charge
70-T0001	7294195	Michelin Brand Required		1,615.00
70-T0007	7294197	Firestone Brand Required		1,205.00
70-T0010	7294198	Trelleborg Brand Required		1,205.00

FRONT AND REAR TIRES

FLANGE AXLE*

Rear: Single Pressed Steel Manual Adjust - Set of 2
Front: Waffle Wheel

75-W1297	7292864B1	Rear:	460/85R38 R1W (MI, FI, TR)	(1,394.00)
	7293762B2	Front:	380/85R28 R1W (MI, FI, TR)	
75-W1309	7292865B1	Rear:	520/85R38 R1W (MI, FI, TR)	(15.00)
	7294762B2	Front:	420/85R28 R1W (MI, FI, TR)	

Rear: Single Welded Pressed Steel - Set of 2
Front: Fixed Welded Steel Rim

75-W1478	7292873B1	Rear:	540/80R38 (Nokian Industrial)	8,927.00
	7294791B2	Front:	440/80R28 (Nokian Industrial)	
75-W1258	7292860B1	Rear:	650/65R38 R1W (MI, TR)	2,937.00
	7294783B2	Front:	540/65R28 R1W (MI, TR)	
75-W1299	7292897B1	Rear:	460/85R38 R1W (MI, FI, TR)	(1,394.00)
	7293762B2	Front:	380/85R28 R1W (MI, FI, TR)	
75-W1530	7292898B1	Rear:	520/85R38 R1W (MI, FI, TR)	(15.00)
	7294762B2	Front:	420/85R28 R1W (MI, FI, TR)	

****Flange Axles are not compatible with Dyna-VT Transmissions***

BAR AXLES- SHORT AND LONG

Rear: Single Welded Pressed Steel - Set of 2
Front: Fixed Welded Steel Rim

75-W1670	7294899B4	Rear:	540/65R38 R1W (MI, TR)	(642.00)
	7294784B2	Front:	440/65R28 R1W (MI, TR)	
75-W1572	7294894B4	Rear:	600/65R38 R1W (MI, FI, TR)	(72.00)
	7293758B2	Front:	480/65R28 R1W (MI, FI, TR)	
75-W1673	7294905B4	Rear:	540/80R38 (Nokian Industrial)	8,936.00
	7294791B2	Front:	440/80R28 (Nokian Industrial)	
75-W1262	7294895B4	Rear:	650/65R38 R1W (MI, TR)	2,948.00
	7294783B2	Front:	540/65R28 R1W (MI, TR)	

(F.O.B. PORT OF ENTRY)

TIRES for 7718

FRONT AND REAR TIRES - CONTINUED

Order Code	Catalog Number	Description	Approx. Weight (lb.)	List Price
		BAR AXLES- SHORT AND LONG		
		Rear: Single Semi Dished Cast Centers- Set of 2		
		Front: Waffle Wheel		
75-Base	7294897B4	Rear: 460/85R38 R1W (18.4R38) (MI, FI, TR)		**In Base**
	7293762B2	Front: 380/85R28 R1W (14.9R28) (MI, FI, TR)		
75-W1533	7294893B4	Rear: 520/85R38 R1W (MI, FI, TR)		2,743.00
	7294762B2	Front: 380/85R28 R1W (MI, FI, TR)		
75-W1394	7294885B4	Rear: 320/90R50 R1W (MI)		1,594.00
	7294769B2	Front: 320/85R34 R1W (MI)		
75-W1377	7294882B4	Rear: 480/80R42 R1W* (MI, TR)		1,426.00
	7293764B2	Front: 380/85R30 R1W* (MI, TR)		
75-W1318	7294883B4	Rear: 380/90R46 R1W* (MI)		1,431.00
	7293764B2	Front: 380/85R30 R1W* (MI)		
75-W1384	7294882B4	Rear: 480/80R42 R1W (MI, TR)		2,066.00
	7294762B2	Front: 420/85R28 R1W (MI, TR)		
75-W1409	7294884B4	Rear: 420/80R46 R1W* (MI)		2,126.00
	7294765B2	Front: 380/85R30 R1W* (MI)		
		BAR AXLES- LONG		
		Rear: Dual Cast Inner / Steel Outer - Set of 4		
		Front: Waffle Wheel		
75-W1374	7294898B4	Duals: 460/85R38 R1W (MI, TR, FI)		7,174.00
	7293762B2	Front: 380/85R28 R1W (MI, TR, FI)		
75-W1379	7294887B4	Duals: 380/90R46 R1W (MI)		8,877.00
	7293764B2	Front: 380/85R30 R1W (MI)		
75-W1380	7294886B4	Duals: 480/80R42 R1W* (MI, TR)		8,147.00
	7293764B2	Front: 380/85R30 R1W* (MI, TR)		
75-W1386	7294886B4	Duals: 480/80R42 R1W (MI, TR)		8,787.00
	7294762B2	Front: 420/85R28 R1W (MI, TR)		
75-W1410	7294888B4	Duals: 420/80R46 R1W* (MI)		9,839.00
	7294765B2	Front: 380/85R30 R1W* (MI)		
75-W1395	7294889B4	Duals: 320/90R50 R1W (MI)		9,879.00
	7294769B2	Front: 320/85R34 R1W (MI)		
		Rear: Dual Cast Inner / Cast Outer - Set of 4		
		Front: Waffle Wheel		
75-W1408	7294925B4	Duals: 380/90R46 R1W (MI)		8,980.00
	7294765B2	Front: 380/85R30 R1W (MI)		
75-W1412	7294926B4	Duals: 420/80R46 R1W* (MI)		9,942.00
	7294765B2	Front: 380/85R30 R1W* (MI)		
75-W1407	7294927B4	Duals: 480/80R42 R1W* (MI, TR)		8,250.00
	7294765B2	Front: 380/85R30 R1W* (MI, TR)		
75-W1405	7294927B4	Duals: 480/80R42 R1W (MI, TR)		8,890.00
	7294762B2	Front: 420/85R28 R1W (MI, TR)		

NOTE: OUTER CAST WHEEL WILL ALLOW FOR 120" TREAD SETTING ON 82MM LONG BAR AXLE

*** FIRESTONE TREAD TYPE IS R1**

(F.O.B. PORT OF ENTRY)

Order Code	Catalog Number	Description	Approx. Weight (lb.)	List Price
PTO				
DYNA-6				
100-LC002	Base	540/540E/1000/1000E Exchangeable Shaft . . . . . 540 RPM 6 Spline and 1000 RPM 21 Spline with Economy PTO		**In Base**
DYNA-VT				
100-Base	Base	540/540E/1000/1000E RPM Flanged PTO with one 6 Spline Shaft and one 21 Spline Shaft, with In-Cab Controls		**In Base**
FRONT HITCH				
230-FA000	Base	Less Front Hitch		**In Base**
230-F1132	7293594	2800 kg Front Linkage w/ 1 Set of Hydraulic Couplers .		6,376.00
230-F1154	7295193	2800 kg Front Linkage w/ 1 Set of Hydraulic Couplers . with Belly Weight		7,231.00
230-F1155	7295194	2800 kg Front Linkage w/ 1 Set of Hydraulic Couplers . Cylinders with 1 Set of Hydraulic Couplers with Front PTO (21 Spline Anti-Clockwise)		13,240.00
230-F1143	7295195	2800 kg Front Linkage, Double Acting Cylinders . . . . with 2 Sets of Front Hydraulic Couplers with Pressure Drain		4,953.00
230-F1156	7295196	2800 kg Front Linkage, Double Acting Cylinders . . . . with 2 Sets of Front Hydraulic Couplers with Pressure Drain with Belly Weight		5,850.00
230-F1157	7295197	2800 kg Front Linkage, Double Acting Cylinders . . . . with 2 Sets of Front Hydraulic Couplers with Pressure Drain with Front PTO (21 Spline Anti-Clockwise)		14,465.00
LOADER PROVISION				
350-LL000	Base	Less Loader Provisions.		**In Base**
350-LL004	7293484	Front Loader Provisions including Hydraulics, Subframe **Requires: Valves 1 and 2 Electric with a Joystick (KX012)**		6,029.00
350-LL005	7295249	Front Loader Provision w/ Live 3rd-SMS Loader Control **Requires: Valves 1 and 2 Electric with a Joystick (KX012) and Less Front Hitch**		7,500.00

TO UTILIZE THE FACTORY INSTALLED MULTIFUNCTION JOYSTICK WITH A LOADER, THE TRACTOR MUST BE EQUIPPED WITH THE LOADER PROVISIONS FROM THE FACTORY.

RADIO				
365- AF011	Base	Radio (CD Player, MP3 compatible), Antenna & Speakers		**In Base**
365-AF009	7294249	Radio, AM/FM, MP3 Compatible		(110.00)
365-AF001	7295157	Antenna and Speakers		(195.00)
CAB				
125-AE042	7293546	Superluxe Grammar Seat		1,792.00
140-AI020	7293077	Standard Cab Roof with Roof Hatch		273.00
140-E1022	7293078	Visio roof . . . . . Not Compatible with: Mirrors (AL009) Automatic Climate Control (AQ004) 2 Front and 2 Rear Xenon Work Lights (VG078) Instrument Control Panel (Auto Steering Ready) (**In Base**) Instrument Control Panel (Auto Steering Complete) (BA021)		1,586.00
145-AL008	7295198	Telescopic Large Side Mirrors . . . . . Requires Visio Roof (E1022)		(181.00)
120-AQ001	7295100	Manual AC		(1,162.00)

(F.O.B. PORT OF ENTRY)

Order Code	Catalog Number	Description	Approx. Weight (lb.)	List Price
FRONT WEIGHTS				
285-YA112	7293487	121 LBS (55 KGS) Front Weights, Set of 12 . . . . . with Hardware - total Weight 1,455 LBS (660 KGS)		2,295.00
REAR WHEEL WEIGHTS				
325-RD040	7294192*	551 LBS (250 KGS) Weights, Set of 2 . . . . . Mounts Externally to Wheel	1102	1,845.00
325-RD041	7294200*	551 LBS (250 KGS) Weights, Set of 4 . . . . . Mounts Externally to Wheel	2204	3,689.00
		***NOT COMPATIBLE WITH MANUAL ADJUST FLANGE AXLE RIMS**		
BELLY AND HITCH WEIGHTS				
245-YD001	7293374	1 Belly Weight - 584 LBS (265 KGS) . . . . . (For use **WITHOUT** Front 3-Point Hitch)	584	1,490.00
345-YB003*	7294270	1,874 lbs (850 kg) Monoblock Weight.		3,406.00
345-YB004*	7294271	3,307 lbs (1500 kg) Monoblock Weight		5,677.00
***NOT COMPATIBLE WITH FRONT WEIGHTS**				
ELECTRICAL				
215-CB002	Base	Engine Block Heater - 110 Volt		**In Base**
215-CB000	7293593	Less Engine Block Heater.		(204.00)
LIGHTING				
205-VF013	7293103	Dual Roof-Mounted Rotating Beacons, Left and Right . (Includes SAE SMV sign)		522.00
195-VG078	7295103	2 Front and 2 Rear Xenon Work Lights.. . . . . Xenon Bulb for Brighter Lights and Longer Bulb Life		3,392.00
360-VE019	7293476	Extremity Lighting		756.00

(F.O.B. PORT OF ENTRY)

Order Code	Catalog Number	Description	Approx. Weight (lb.)	List Price
PIVOTING FRONT FENDERS				
155-WE110	Base	Pivoting Front Fenders - Standard Width . . . . . Width depends on tire selection; see Chart Below		**In Base**
155-WE000	7294247	Less Front Fenders		(95.00)
155-WE111	7293598	Pivoting Front Fenders - Wide Width . . . . . Width depends on tire selection; see Chart Below		120.00

Fender Size		
Standard	**Wide**	**Tire Sizes**
12.6" (320) mm	13.9" (355) mm	320/85R34 (12.4R34)
13.9" (355) mm	14.9" (380) mm	340/85R24 (13.6R24) 340/85R28 (13.6R28)
14.9" (380) mm	16.1" (410) mm	380/85R28 (14.9R28) 380/85R30 (14.9R30) 400/80R24 400/80R28
16.1" (410) mm	18.5" (470) mm	420/85R28 (16.9R28) 440/65R28
18.5" (470) mm	20.4" (520) mm	440/80R28 480/65R28
20.4" (520) mm	24.4" (620) mm	540/65R28

REAR FENDERS				
255-WD012	Base	Rear Fenders without Extensions, 78.74"(2.00 M) . . .		**In Base**
255-WD017	7293107	Wide Fender -90.55" (2.3 M) with Rear Extension . . .		1,323.00
255-WD020	7293109	Extra Wide Fender -100.4" (2.55 M) . . . . . with Rear Extension		1,464.00

(F.O.B. PORT OF ENTRY)

Order Code	Catalog Number	Description	Approx. Weight (lb.)	List Price
MISCELLANEOUS				
35-EN002	7293402	14:1:1 Super Creeper Reduction Gear . . . . . (**Available on Dyna-6 Editions Only)** Requires: Less Front Hitch (FA000) and Suspended Front Axle		2,907.00
250-GS001	7293100	Hydraulic Trailer Brakes		817.00
250-GS067	7293552	Pneumatic & Hydraulic		7,508.00
225-LQ001	7293553	Water Separator (Fuel Filter)		466.00
275-TC005	7294210	French Language OIB.		No Charge
275-TC011	7294211	Spanish Language OIB		No Charge
DEALER INSTALLED OPTIONS				
FRONT WEIGHTS				
	5020186M	8 x 55kg (121 lbs.) Front Weights	968	1,545.00
	5020187M	10 x 55kg (121 lbs.) Front Weights	1210	1,913.00
	5020188M	12 x 55kg (121 lbs.) Front Weights	1452	2,295.00
	5020189M	14 x 55kg (121 lbs.) Front Weights	1694	2,678.00
	5020190M	16 x 55 kg (121 lbs.) Front Weights	1936	3,060.00
REAR WEIGHT PACKAGE				
	5020202M	Additional Rear Wheel Weight Package - . . . . . set of 2 x 250kg (550 lbs) 250kg Weight Weight can be mounted onto Cast Center or previously installed 250kg Cast Weight		2,029.00

MASSEY FERGUSON®

7719 / 7720 / 7722 / 7724 / 7726 SERIES

HIGH HORSEPOWER

MASSEY FERGUSON®

(F.O.B. PORT OF ENTRY)

CLASSIC EDITION FEATURES

ENGINE
7719 / 7720
AP66-4: AGCO POWER™ 6.6L (403 cu in.) 6 Cylinder, Tier 4f Compliant
- SCR Technology
- Air-to-Air Aftercooled, Common Rail Injection eWastegate Turbocharged

7722 / 7724 / 7726
AP74-4: AGCO POWER™ 7.4L (452 cu in.) 6 Cylinder, Tier 4f Compliant
- SCR Technology
- Air-to-Air Aftercooled, Common Rail Injection, Turbocharged

Electronic Engine Management (EEM) EPM (Engine Power Management) and 2 Engine RPM Pre-sets
Electronic Controlled Viscous Fan Drive
Dual Element Dry Type Air Cleaner
Vertical Exhaust at Right Front Cab Post
Cooling System: Antifreeze to Minus 30F (-34C)
Fuel Tank Capacity: 114 Gal (430)
DEF Tank Capacity: 11 Gal (40L)
Engine Block Heater (110V)

POWERTRAIN
Dyna-6 Transmission:
- 24F/24R Semi-Powershift, 4 Ranges with 6 Powershifts per Range

7719 / 7720 / 7722: Long Bar Rear Axle 112 in. (2847mm) Long, 3.74 in. (95mm) Diameter
7724 / 7726: Long Bar Rear Axle 118.2 in. (3002mm) Long, 4.33 in. (110mm) Diameter
Multi-Disc Wet Brakes
Power Differential Lock
Independent PTO:
Dyna-6: 540/1000 RPM, 540 with 6 Spline Shaft, 1000 RPM with 21 Spline Shaft, Flanged Shaft
Rear Fender Mounted PTO Shut-Off
Less SV1 & SV2 Settings

FRONT WHEEL ASSIST AXLE
Power Front Axle (PFA)
Shielded Center Drive Line with Electro-Hydraulic Control & Front Wheel Drive Differential Lock
55 Degree Steering Angle

HYDRAULICS
Closed Center Load Sensing 29 GPM (110 L/Min) Pump
2900 PSI (200 Bar) Maximum Pressure
3 Mechanical Valves – Lever Controlled on Right Hand Console
Hydrostatic Power Steering

HITCH
3 Point Hitch: Category 3 Linkage Ball Ends with Quick Hitch
- Active Transport Control
- Lower Link Sensing
- Electronic Draft Control, Electronic Height Control and Rate of Drop
- Rub Block Stabilizers
- Left and Right Side External 3 Point Control

7719 / 7720 / 7722: Swinging Category II Drawbar w/ Clevis & Drop Pin
7724 / 7726: Swinging Category III Drawbar w/ Clevis & Drop Pin

ELECTRICAL SYSTEM
175 Amp Alternator
2 – 12V Batteries, 600 CCA Each (SAE)
7 Pin ASAE Rear Trailer Electrical Outlet
Electrical Isolator Switch and Jumpstart Point
Ignition with Neutral Start and Key Shutoff

LIGHTING
8 Front Hood Mounted Lights
Four Front Single Bulb Worklights
Two Rear Double Bulb Worklights
Taillights, Flashing Warning Lights and Turn Signals

INSTRUMENTS
Tachometer: Digital and Analog
PTO Speed: Digital
Ground Speed Display: Digital
Fuel Level, DEF Level, and Coolant Temp Gauges
Warning/Information Lights

OPERATOR AREA
Instructor Seat with Seat Belt
6 Post Cab
Transmission Control T-Handle on Right Hand Console
Adjustable Steering Column
Front Sun Visor
Air Conditioning and Heater
Air Suspended Seat - Automatic Adjustment
Front and Rear Windshield Wiper/Washer
Dual Large Telescoping Outside Rear View Mirrors
Single Inside Rear View Mirror
Radio with Antenna & Speakers (MP3 Compatible)

3 Pin 12V Power Outlets
12V Cigarette Lighter Style Power Outlet

WHEELS AND TIRES
7719 / 7720 / 7722
Rear: 480/80R42 R1W Single Semi-Dished Cast Center Wheels
Front: 420/85R28 R1W Single Waffle Wheels
7724 / 7726
Rear: 480/80R46 R1W Single Semi-Dished Cast Center Wheels
Front: 420/90R30 R1W Single Waffle Wheels

OTHER STANDARD FEATURES
AGCOMMAND™ Equipped w/ Antenna, Bracket, Harness & Telemetry Module, Includes: AGCOMMAND™ Advanced (1 Year Subscription, Must be activated within 12 months of warranty registration)
Lockable Tool Box
SMV Sign
Molded Rear Fenders
English Literature

(F.O.B. PORT OF ENTRY)

Order Code	Catalog Number	Description	Approx. Weight (lb.)	List Price

ONE *ORDER CODE* FROM EACH GROUP MUST BE SPECIFIED. (Unless In Base Option is desired)

BASE MACHINE

DYNA-6 EDITIONS-- Beauvais Built

MF7719~D6~ES~02	7295134	Massey 7719 Classic Tractor 145 PTO HP	153,697.00
MF7720~D6~ES~02	7295135	Massey 7720 Classic Tractor 155 PTO HP	159,965.00
MF7722~D6~ES~02	7295136	Massey 7722 Classic Tractor 165 PTO HP	169,368.00
MF7724~D6~ES~02	7295137	Massey 7724 Classic Tractor 180 PTO HP	180,149.00
MF7726~D6~ES~02	7295138	Massey 7726 Classic Tractor 200 PTO HP	189,277.00

TRANSMISSION OPTIONS

FOR MF7719 & MF7720

25-NA030	Base	6x4 Dyna-6 Transmission with 24F/24R gears . . . . 25 MPH (40 KPH) with Dynamic Tractor Management (DTM) Includes: Non-Suspended Power Front Axle	**In Base**
25-NA032	7295149	6x4 Dyna-6 Transmission with 24F/24R gears. . . . 25 MPH (40 KPH) with Dynamic Tractor Management (DTM) Includes: Suspended Power Front Axle and Power Assist Brakes	7,105.00
25-G1061	7295150	6X4 Dyna-6 Transmission with 24F/24R gears. . . . 31 MPH (50 KPH) with Dynamic Tractor Management (DTM) Includes: Suspended Power Front Axle and High Capacity Power Assist Brakes	9,422.00

FOR MF7722 - MF7726

25-NA030	Base	6x4 Dyna-6 Transmission with 24F/24R gears . . . . 25 MPH (40 KPH) with Dynamic Tractor Management (DTM) Includes: Non-Suspended Power Front Axle	**In Base**
25-G1061	7295150	6X4 Dyna-6 Transmission with 24F/24R gears. . . . 31 MPH (50 KPH) with Dynamic Tractor Management (DTM) Includes: Suspended Power Front Axle & High Capacity Power Assist Brakes	9,422.00

BRAKES

FOR MF7722 - MF7726

270-EG018	7295015	High Capacity Power Assist Brakes . . . . . . Required with In Base 6x4 Transmission (NA030)	No Charge

AUXILIARY HYDRAULIC FLOW

370-DP110	Base	29 GPM (110 L/min) Closed Center Load Sensing . .	**In Base**
370-DP150	7293529	39 GPM (150 L/min) Closed Center Load Sensing. .	1,367.00

AUXILIARY VALVE 1 & 2

50-KX010	Base	2 Mechanical Controlled Valves, Located on Right Hand Console. 1st and 2nd - Flow Dividing, Kickout, Zero Leak, Float	**In Base**

AUXILIARY VALVE 3 & 4

55-MU003	Base	3rd Mechanical Valve Only, Located on Right Hand Console. Kickout, Zero Leak, Flow Dividing, Float	**In Base**
55-MU012	7293531	3rd and 4th Mechanically Controlled Valves, ... Located on Right Hand Console. Kickout, Zero Leak, Flow Dividing, Float	1,170.00

(F.O.B. PORT OF ENTRY)

Order Code	Catalog Number	Description	Approx. Weight (lb.)	List Price
POWER BEYOND				
90-GR000	Base	Less Power Beyond		**In Base**
90-GR010	7295153	Power Beyond Couplers P/T/LS/D		737.00
REAR AXLE				
FOR 7719 - 7722				
60-EE404	Base	Long Bar Rear Axle, 112 in. (2847mm) long . . . . . 3.74 in. (95mm) diameter		**In Base**
60-EE402	7293527	Short Bar Rear Axle, 84.4 in. (2144mm) long . . . . . 3.74 in. (95mm) diameter		(591.00)
FOR 7724 / 7726				
60-EE405	Base	Long Bar Rear Axle, 118.2 in. (3002mm) long . . . . . 4.33 in. (110mm) diameter		**In Base**
60-EE403	7293528	Short Bar Rear Axle, 86.7 in. (2202mm) long . . . . . 4.33 in. (110mm) diameter		(591.00)
REAR 3-POINT HITCH				
85-Base	Base	Category 3 Fixed Ball End Links with Category 3/3N Quick Hitch		**In Base**
85-GC009	7293694	Category 3 Fixed Ball End Links		(1,307.00)
DRAWBAR				
FOR 7719 - 7722				
95-YM027	Base	Swinging Category II Drawbar w/ Clevis & Drop Pin . .		**In Base**
95-YM242	7293695	Swinging Category III Drawbar w/ Clevis & Drop Pin . .		893.00
FOR 7724 - 7726				
95-YM242	Base	Swinging Category III Drawbar w/ Clevis & Drop Pin . .		**In Base**
95-YM027	7293696	Swinging Category II Drawbar w/ Clevis & Drop Pin . .		(320.00)
INSTRUMENT PANEL / CONTROL CENTER DISPLAY (CCD)				
175-BA005	Base	Analog and Digital Instrument Panel w/o Radar or Slip . Control. No Control Center Display (CCD).		**In Base**
175-BA003	7293084	Analog and Digital Instrument Panel with Radar . . . . (For Actual Ground Speed) and Slip Control. No Control Center Display (CCD).		882.00

(F.O.B. PORT OF ENTRY)

TIRES for 7719, 7720 and 7722

TIRE BRAND SELECTION

Order Code	Catalog Number	Description	Approx. Weight (lb.)	List Price
70-Blank	7294212	Factory Brand Choice		No Charge
70-T0001	7294195	Michelin Brand Required		1,615.00
70-T0007	7294197	Firestone Brand Required		1,205.00
70-T0010	7294198	Trelleborg Brand Required		1,205.00

FRONT AND REAR TIRES

		Rear:	***Single Welded Pressed Steel - Set of 2***		
		Front:	***Fixed Welded Steel Rim***		
75-W1585	7294857B3	Rear:	710/70R38 R1W (MI, TR)		4,264.00
	7294793B1	Front:	600/65R28 R1W (MI, TR)		
75-W1716	7294858B3	Rear:	620/70R42 R1W (TR)		3,655.00
	7294793B1	Front:	600/65R28 R1W (TR)		
		Rear:	***Single Semi Dished Cast Centers- Set of 2***		
		Front:	***Waffle Wheel***		
75-Base	7294882B3	Rear:	480/80R42 R1W (18.4R42 R1W) (MI, TR)		**In Base**
	7294762B1	Front:	420/85R28 R1W (16.9R28 R1W) (MI, TR)		
75-W1377	7294882B3	Rear:	480/80R42 R1W (18.4R42 R1W) (MI, TR)		(621.00)
	7294765B1	Front:	380/85R30 R1W (14.9R30 R1W) (MI, TR)		
75-W1485	7294870B3	Rear:	520/85R42 R1W (20.8R42 R1W) (MI, TR)		902.00
	7294766B1	Front:	420/85R30 R1W (16.9R30 R1W) (MI, TR)		
75-W1325	7294870B3	Rear:	520/85R42 R1W (20.8R42 R1W) (MI)		1,354.00
	7294767B1	Front:	420/90R30 R1W (MI)		
75-W1398	7294870B3	Rear:	520/85R42 R1W (20.8R42 R1W) (MI, TR)		1,100.00
	7294770B1	Front:	380/85R34 R1W (14.9R34 R1W) (MI, TR)		
75-W1626	7294871B3	Rear:	480/80R46 R1W (18.4R46 R1W) (MI, TR)		582.00
	7294766B1	Front:	420/85R30 R1W (16.9R30 R1W) (MI, TR)		
75-W1413	7294871B3	Rear:	480/80R46 R1W (18.4R46 R1W) (MI)		1,034.00
	7294767B1	Front:	420/90R30 R1W (MI)		
75-W1349	7294871B3	Rear:	480/80R46 R1W (18.4R46 R1W) (MI, TR)		780.00
	7294770B1	Front:	380/85R34 R1W (14.9R34 R1W) (MI, TR)		
75-W1802	7294911B3	Rear:	380/90R50 R1W (FI)		1,550.00
	7294770B1	Front:	380/85R34 R1W (14.9R34 R1W) (FI)		
75-W1354	7294875B3	Rear:	320/90R54 R1W (MI)		3,334.00
	7294773B1	Front:	320/85R38 R1W (MI)		

(F.O.B. PORT OF ENTRY)

TIRES for 7719, 7720 and 7722

FRONT AND REAR TIRES - CONTINUED

Order Code	Catalog Number		Description	Approx. Weight (lb.)	List Price
		Rear:	***Dual Cast Inner / Steel Outer - Set of 4***		
		Front:	***Waffle Wheel***		
75-W1386	7294886B3	Duals:	480/80R42 R1W (18.4R42 R1W) (MI, TR) . . .		6,722.00
	7294762B1	Front:	420/85R28 R1W (16.9R28 R1W) (MI, TR)		
75-W1380	7294886B3	Duals:	480/80R42 R1W (18.4R42 R1W) (MI, TR) . . .		6,101.00
	7294765B1	Front:	380/85R30 R1W (MI, TR)		
75-W1596	7294863B3	Duals:	520/85R42 R1W (20.8R42 R1W) (MI, TR) . . .		9,348.00
	7294766B1	Front:	420/85R30 R1W (16.9R30 R1W) (MI, TR)		
75-W1391	7294863B3	Duals:	520/85R42 R1W (20.8R42 R1W) (MI)		9,800.00
	7294767B1	Front:	420/90R30 R1W (MI)		
75-W1399	7294863B3	Duals:	520/85R42 R1W (20.8R42 R1W) (MI, TR) . . .		9,546.00
	7294770B1	Front:	380/85R34 R1W (14.9R34 R1W) (MI, TR)		
75-W1627	7294864B3	Duals:	480/80R46 R1W (18.4R46 R1W) (MI, TR) . . .		8,797.00
	7294766B1	Front:	420/85R30 R1W (16.9R30 R1W) (MI, TR)		
75-W1414	7294864B3	Duals:	480/80R46 R1W (18.4R46 R1W) (MI)		9,249.00
	7294767B1	Front:	420/90R30 R1W (MI)		
75-W1401	7294864B3	Duals:	480/80R46 R1W (18.4R46 R1W) (MI, TR) . . .		8,995.00
	7294770B1	Front:	380/85R34 R1W (14.9R34 R1W) (MI, TR)		
75-W1745	7294866B3	Duals:	380/90R50 R1W (14.9R50 R1W) (FI)		8,259.00
	7294770B1	Front:	380/85R34 R1W (14.9R34 R1W) (FI)		
75-W1404	7294868B3	Duals:	320/90R54 R1W (MI)		9,581.00
	7294773B1	Front:	320/85R38 R1W (MI)		
		Rear:	***Dual Cast Inner / Steel Outer - Set of 4***		
		Front:	***Welded Wheel***		
75-W1821	7294863B3	Duals:	520/85R42 R1W (20.8R42 R1W) (MI, TR) . . .		12,080.00
	7294793B1	Front:	600/65R28 R1W (MI, TR)		

(F.O.B. PORT OF ENTRY)

TIRES for 7724 and 7726

TIRE BRAND SELECTION

Order Code	Catalog Number	Description	Approx. Weight (lb.)	List Price
70-Blank	7294212	Factory Brand Choice		No Charge
70-T0001	7294195	Michelin Brand Required		1,615.00
70-T0007	7294197	Firestone Brand Required		1,205.00
70-T0010	7294198	Trelleborg Brand Required		1,205.00

FRONT AND REAR TIRES

		Rear:	***Single Welded Pressed Steel - Set of 2***	
		Front:	***Fixed Welded Steel Rim***	
75-W1585	7294857B2	Rear:	710/70R38 R1W (MI, TR)	3,229.00
	7294793	Front:	600/65R28 R1W (MI, TR)	
75-W1716	7294858B2	Rear:	620/70R42 R1W (TR)	2,620.00
	7294793	Front:	600/65R28 R1W (TR)	
		Rear:	***Single Semi Dished Cast Centers- Set of 2***	
		Front:	***Waffle Wheel***	
75-Base	7294871B2	Rear:	480/80R46 R1W (18.4R46 R1W) (MI)	**In Base**
	7294767	Front:	420/90R30 R1W (MI)	
75-W1485	7294870B2	Rear:	520/85R42 R1W (20.8R42 R1W) (MI, TR)	(120.00)
	7294766	Front:	420/85R30 R1W (16.9R30 R1W) (MI, TR)	
75-W1398	7294870B2	Rear:	520/85R42 R1W (20.8R42 R1W) (MI, TR)	73.00
	7294770	Front:	380/85R34 R1W (14.9R34 R1W) (MI, TR)	
75-W1384	7294882B2	Rear:	480/80R42 R1W (18.4R42 R1W) (MI, TR)	(1,004.00)
	7294762	Front:	420/85R28 (16.9R28 R1W) R1W (MI, TR)	
75-W1325	7294870B2	Rear:	520/85R42 R1W (20.8R42 R1W) (MI)	320.00
	7294767	Front:	420/90R30 R1W (MI)	
75-W1377	7294882B2	Rear:	480/80R42 R1W (18.4R42 R1W) (MI, TR)	(1,625.00)
	7294765	Front:	380/85R30 (14.9R30) R1W (MI, TR)	
75-W1626	7294871B2	Rear:	480/80R46 R1W (18.4R46 R1W) (MI, TR)	(440.00)
	7294766	Front:	420/85R30 (16.9R30) R1W (MI, TR)	
75-W1349	7294871B2	Rear:	480/80R46 R1W (18.4R46 R1W) (MI, TR)	(247.00)
	7294770	Front:	380/85R34 (14.9R34) R1W (MI, TR)	

(F.O.B. PORT OF ENTRY)

TIRES for 7724 and 7726

FRONT AND REAR TIRES - CONTINUED

Order Code	Catalog Number		Description	Approx. Weight (lb.)	List Price
		Rear:	***Dual Cast Inner / Steel Outer - Set of 4***		
		Front:	***Waffle Wheel***		
75-W1386	7294886B2	Duals:	480/80R42 R1W (18.4R42 R1W) (MI, TR) . . .		5,700.00
	7294762	Front:	420/85R28 R1W (16.9R28 R1W) (MI, TR)		
75-W1380	7294886B2	Duals:	480/80R42 R1W (18.4R42 R1W) (MI, TR) . . .		5,079.00
	7294765	Front:	380/85R30 R1W (MI, TR)		
75-W1596	7294863B2	Duals:	520/85R42 R1W (20.8R42 R1W) (MI, TR) . . .		8,326.00
	7294766	Front:	420/85R30 R1W (16.9R30 R1W) (MI, TR)		
75-W1391	7294863B2	Duals:	520/85R42 R1W (20.8R42 R1W) (MI)		8,766.00
	7294767	Front:	420/90R30 R1W (MI)		
75-W1399	7294863B2	Duals:	520/85R42 R1W (20.8R42 R1W) (MI, TR) . . .		8,519.00
	7294770	Front:	380/85R34 R1W (14.9R34 R1W) (MI, TR)		
75-W1627	7294864B2	Duals:	480/80R46 R1W (18.4R46 R1W) (MI, TR) . . .		7,774.00
	7294766	Front:	420/85R30 R1W (16.9R30 R1W) (MI, TR)		
75-W1414	7294864B2	Duals:	480/80R46 R1W (18.4R46 R1W) (MI)		8,214.00
	7294767	Front:	420/90R30 R1W (MI)		
75-W1401	7294864B2	Duals:	480/80R46 R1W (18.4R46 R1W) (MI, TR) . . .		7,967.00
	7294770	Front:	380/85R34 R1W (14.9R34 R1W) (MI, TR)		
75-W1404	7294868B2	Duals:	320/90R54 R1W (MI)		8,546.00
	7294773	Front:	320/85R38 R1W (MI)		
75-W1745	7294866B2	Duals:	380/90R50 R1W (14.9R50 R1W) (FI).		7,231.00
	7294770	Front:	380/85R34 R1W (14.9R34 R1W) (FI)		
		Rear:	***Dual Cast Inner / Steel Outer - Set of 4***		
		Front:	***Welded Wheel***		
75-W1821	7294863B2	Duals:	520/85R42 R1W (20.8R42 R1W) (MI, TR) . . .		11,045.00
	7294793	Front:	600/65R28 R1W (MI, TR)		

(F.O.B. PORT OF ENTRY)

Order Code	Catalog Number	Description	Approx. Weight (lb.)	List Price
PTO				
100-LA032	Base	2000 Engine RPM with 540/1000RPM flanged PTO, in Cab Control - 6/21 spline studs		**In Base**
100-LA045	7295154	2000 Engine RPM w/ 540/540e/1000RPM flanged PTO, in Cab Control - 6 & 21 spline studs		258.00
100-LA100	7295155	2000 Engine RPM w/ 540e/1000e/1000RPM flanged PTO, in Cab Control - 6 & 21 spline studs		345.00
FRONT HITCH				
230-FA000	Base	Less Front Hitch, Less Front Hydraulic Couplers		**In Base**
230-F1120*	7293366	8,818 lbs. (4000 kg) Front Linkage Double Acting Cylinders with 1 Set of Front Hydraulic Couplers with Pressure Drain		7,253.00
230-F1145*	7295160	8,818 lbs. (4000 kg) Front Linkage Double Acting Cylinders with 1 Set of Hydraulic Couplers with Belly Weight		8,318.00
230-F1153*	7295161	8,818 lbs. (4000 kg) Front Linkage Double Acting Cylinders with 1 Set of Hydraulic Couplers with Front PTO (21 Spline Anti-Clockwise)		14,327.00
RADIO				
365-AF009	Base	Radio with Antenna & Speakers (MP3 Compatible)		**In Base**
365-AF001	7295159	Antenna and Speakers		(602.00)
CAB				
115-AM015	Base	Standard Cab Isolation		**In Base**
115-AM084	7293559	Mechanical Cab Suspension		1,705.00
FRONT WEIGHTS				
285-YA000	Base	Front Weight Carrier		**In Base**
285-YA112	7293487	121 LBS (55 kgs.) Front Weights, Set of 12 with Hardware - total Weight 1,455 lbs. (660 kgs.) Not compatible with Monoblock Weights (YB003 & YB004) or Front Hitch (F1120, F1145, or F1153)		2,295.00
REAR WHEEL WEIGHTS				
325-RD040	7294192	551 lbs. (250 kgs.) Weights, Set of 2 Mounts Externally to Wheel	1102	1,845.00
325-RD041	7294200	551 lbs. (250 kgs.) Weights, Set of 4 Mounts Externally to Wheel	2204	3,689.00
BELLY AND HITCH WEIGHTS				
245-YD001	7293374	1 Belly Weight - 584 lbs. (265 kgs.) (For use **WITHOUT** Front 3-Point Hitch)	584	1,490.00
345-YB003*	7294270	1,875 lbs (850 kg) Monoblock Weight		3,406.00
345-YB004*	7294271	3,307 lbs (1500 kg) Monoblock Weight		5,677.00

***REQUIRES: SUSPENDED FRONT AXLE**

***NOT COMPATIBLE WITH FRONT WEIGHTS**

(F.O.B. PORT OF ENTRY)

Order Code	Catalog Number	Description	Approx. Weight (lb.)	List Price
ELECTRICAL				
215-CB002	Base	Engine Block Heater - 110 Volt		**In Base**
215-CB000	7293593	Less Engine Block Heater		(204.00)
ALTERNATOR				
220-CE020	Base	175 AMP Alternator.		**In Base**
220-CE019	7293533	Twin 120 AMP Alternators.		391.00
LIGHTING				
205-VF013	7293103	Dual Roof-Mounted Rotating Beacons, Left and Right (Includes SAE SMV sign)		522.00
195-VG078	7295103	2 Xenon and 2 Single Bulb Front Worklights, 2 Xenon Rear Worklights		3,392.00
190-VK004	7293597	Worklights on Handrails and Rear Fenders		543.00
PIVOTING FRONT FENDERS				
155-WE110	Base	Pivoting Front Fenders - Standard Width Width depends on tire selection; see Chart Below		**In Base**
155-WE111	7293598	Pivoting Front Fenders - Wide Width Width depends on tire selection; see Chart Below		120.00

Fender Size		
Standard	**Wide**	**Tire Sizes**
12.6" (320 mm)	13.9" (355 mm)	320/85R34 (12.4R34) 320/85R38 (12.4R38)
14.9" (380 mm)	16.1" (410 mm)	380/85R30 (14.9R30) 380/85R34 (14.9R34) 400/80R28
16.1" (410 mm)	18.5" (470 mm)	420/85R28 (16.9R28) 420/85R30 (16.9R30) 420/90R30
18.5" (470 mm)	20.4" (520 mm)	480/70R30
20.4" (520 mm)	24.4" (620 mm)	540/65R28 540/65R30
24.4" (620 mm)	27.5" (700 mm)	600/65R28 710/55R30

REAR FENDERS				
255-WD012	Base	Rear Fenders without Extensions, 78.74" (2.00 M)		**In Base**
255-WD017	7293107	Wide Fender -90.55" (2.3 M) with Rear Extension		1,323.00
255-WD020	7293109	Extra Wide Fender -100.4" (2.55 M) with Rear Extension		1,464.00

(F.O.B. PORT OF ENTRY)

Order Code	Catalog Number	Description	Approx. Weight (lb.)	List Price
MISCELLANEOUS				
35-EN001	7293092	Creeper Gear (4:1 Reduction)		2,366.00
250-GS001	7293100	Hydraulic Trailer Brakes		817.00
250-GS067	7293552	Pneumatic & Hydraulic Trailer Brakes		7,508.00
225-LQ001	7293553	Water Separator (Fuel Filter)		466.00
275-TC005	7294210	French Language OIB		No Charge
275-TC011	7294211	Spanish Language OIB		No Charge

DEALER INSTALLED OPTIONS

FRONT WEIGHTS

BEAUVAIS BUILT

	5020186M	8 x 55 kg (121 lbs.) Front Weights	968	1,545.00
	5020187M	10 x 55 kg (121 lbs.) Front Weights	1210	1,913.00
	5020188M	12 x 55 kg (121 lbs.) Front Weights	1452	2,295.00
	5020189M	14 x 55 kg (121 lbs.) Front Weights	1694	2,678.00
	5020190M	16 x 55 kg (121 lbs.) Front Weights	1936	3,060.00

REAR WEIGHT PACKAGE

	5020202M	Additional Rear Wheel Weight Package - set of 2 x 250kg (550 lbs) 250kg Weight Adapter for 10 Bolt Hub (order weights separately)		2,029.00

7700 LARGE FRAME DELUXE EDITION

MASSEY FERGUSON®

(F.O.B. PORT OF ENTRY)

DELUXE EDITION FEATURES

ENGINE

7719 / 7720 Dyna-6, 7719 / 7720 Dyna-VT:
AP66-4: AGCO POWER™ 6.6L (402 cu in.) 6 Cylinder, Tier 4f Compliant
- SCR Technology
- Air-to-Air Aftercooled, Common Rail Injection, eWastegate Turbocharged

7722 / 7724 / 7726 Dyna-6, 7722 / 7724 / 7726Dyna-VT:
AP74-4: AGCO POWER™ 7.4L (452 cu in.) 6 Cylinder, Tier 4f Compliant
- SCR Technology
- Air-to-Air Aftercooled, Common Rail Injection, Turbocharged

Electronic Engine Management (EEM) with Dual ERPM Settings
Electronic Controlled Viscous Fan Drive
Dual Element Dry Type Air Cleaner
Vertical Exhaust at Right Front Cab Post
Cooling System: Antifreeze to Minus 30°F (-34°C)
Fuel Tank Capacity: 114 Gal (430)
DEF Tank Capacity: 11 Gal (40L)
Engine Block Heater (110V)

POWERTRAIN

Dyna-VT Transmission:
- Continuously Variable Transmission, 60 ft/h to 25 MPH (18.2 Meters/h to 40 KPH)
- Dynamic Tractor Management (DTM) with Two Programmable Cruise Speeds
- Long Bar Rear Axle 118.2 in. (3002mm) Long, 3.74 in. (95mm) Diameter

Dyna-6 Transmission:
- 24F/24R Semi-Powershift, 4 Ranges with 6 Powershifts per Range
- Dynamic Tractor Management (DTM) with Two Programmable Cruise Speeds

7719 / 7720 / 7722: Long Bar Rear Axle 112 in. (2847mm) Long, 3.74 in. (95mm) Diameter
7724 / 7726: Long Bar Rear Axle 118.2 in. (3002mm) Long, 4.33 in. (110mm) Diameter
Multi-Disc Wet Brakes
Power Differential Lock
Independent PTO
Dyna-VT: 540/540E/1000/1000E RPM Flanged Shaft, 540 with 6 Spline and 1000 with 21 Spline
Dyna-6: 540/540E/1000 RPM Flanged Shaft, 540 with 6 Spline and 1000 with 21 Spline
Rear Fender Mounted PTO Shut-Off
SV1 & SV2 Settings

FRONT WHEEL ASSIST AXLE

Power Front Axle (PFA)
Suspended Front Axle
Shielded Center Drive Line with Electro-Hydraulic Control & Front Wheel Drive Differential Lock
55 Degree Steering Angle
SpeedSteer

HYDRAULICS

Closed Center Load Sensing 29 gpm (110 L/Min) Pump
2900 PSI (200 Bar) Maximum Pressure
2 Electric Valves - Fingertip Controlled on Armrest, 2 Mechanical Valves – Lever Controlled on Right Hand Console
Hydrostatic Power Steering
Power Beyond
Fender Control Spool Valve Control

ELECTRICAL SYSTEM

2 – 120 Amp Alternators
2 – 12V Batteries, 600 CCA Each (SAE)
7 Pin ASAE Rear Trailer Electrical Outlet
Electrical Isolator Switch and Jumpstart Point
Ignition with Neutral Start and Key Shutoff

HITCH

3 Point Hitch: Category 3 Linkage Ball Ends with Quick Hitch
- Active Transport Control
- Lower Link Sensing
- Electronic Draft Control, Electronic Height Control and Rate of Drop
- Rub Block Stabilizers
- Left and Right Side External 3 Point Control

7719/7720/7722: Swinging Category II Drawbar w/ Clevis & Drop Pin
7724 / 7726: Swinging Category III Drawbar w/ Clevis & Drop Pin

LIGHTING

8 Front Hood Mounted Lights
Four Front Single Bulb Worklights
Two Rear Double Bulb Worklights
Two Field Lights on Hand Rails and Rear Fenders with Taillights, Flashing Warning Lights, and Turn Signals

INSTRUMENTS

Control Center Display (CCD)
- Video Input
- Electric Valve Control
- ISOBUS Compliant

Radar with Slip Control
Tachometer: Digital and Analog
PTO Speed: Digital
Ground Speed Display: Digital
Fuel Level, DEF Level, and Coolant Temp Gauges
Warning/Information Lights

OPERATOR AREA

Instructors Seat with Seat Belt
2 Electrical Sockets
Mechanical Cab Suspension
6 Post Cab
Transmission Control T-Handle on Armrest
Adjustable Steering Column
Front Sun Visor
Air Conditioning and Heater
Air Suspended Seat - Automatic Adjustment
Front and Rear Windshield Wiper/Washer
Dual Large Telescoping Outside Rear View Mirrors
Single Inside Rear View Mirror
CD Player, Bluetooth, Radio with Antenna & Speakers (MP3 Compatible)
3 Pin 12V Power Outlet
12V Cigarette Lighter Style Power Outlet
ISO 11783 9-Pin in Cab Connector
ISO 11786 7-Pin in Cab Connector

WHEELS AND TIRES

7719 / 7720 / 7722
Rear 480/80R42 R1W Single Semi-Dished Cast Center Wheels
Front 420/85R28 R1W Single Waffle Wheels
7724 / 7726
Rear 480/80R46 R1W Single Semi-Dished Cast Center Wheels
Front 420/90R30 R1W Single Waffle Wheels

OTHER STANDARD FEATURES

Auto-Steer Ready
AGCOMMAND™ Equipped w/ Antenna, Bracket, Harness & Telemetry Module, Includes: AGCOMMAND™ Advanced (1 Year Subscription, Must be activated within 12 months of warranty registration)
Lockable Tool Box
SMV Sign
Molded Rear Fenders
English Literature

(F.O.B. PORT OF ENTRY)

Order Code	Catalog Number	Description	Approx.List Weight (lb.)	Price

ONE *ORDER CODE* FROM EACH GROUP MUST BE SPECIFIED. (Unless In Base Option is desired)

BASE MACHINE

DYNA-6 EDITIONS-- Beauvais Built

MF7719~D6~EF~02	7295200	Massey 7719 Deluxe Tractor 145 PTO HP	176,503.00
MF7720~D6~EF~02	7295201	Massey 7720 Deluxe Tractor 155 PTO HP	182,772.00
MF7722~D6~EF~02	7295202	Massey 7722 Deluxe Tractor 165 PTO HP	192,174.00
MF7724~D6~EF~02	7295203	Massey 7724 Deluxe Tractor 180 PTO HP	202,954.00
MF7726~D6~EF~02	7295204	Massey 7726 Deluxe Tractor 200 PTO HP	212,084.00

DYNA-VT EDITIONS-- Jackson Built

MF7719~DV~EF~02	7295210	Massey 7719 Deluxe Tractor 145 PTO HP	188,426.00
MF7720~DV~EF~02	7295211	Massey 7720 Deluxe Tractor 155 PTO HP	194,695.00
MF7722~DV~EF~02	7295212	Massey 7722 Deluxe Tractor 165 PTO HP	204,098.00
MF7724~DV~EF~02	7295213	Massey 7724 Deluxe Tractor 180 PTO HP	214,879.00
MF7726~DV~EF~02	7295214	Massey 7726 Deluxe Tractor 200 PTO HP	224,007.00

***16 weeks out for changes on Jackson Built Models**

TRANSMISSION OPTIONS FOR DYNA-6 EDITIONS

FOR MF7719 - MF7720

25-EA655	Base	6x4 Dyna-6 Transmission with 24F/24R gears. . . . 25 MPH (40 KPH) with Dynamic Tractor Management (DTM) Includes: Suspended Power Front Axle	**In Base**
25-NA030	7295151	6X4 Dyna-6 Transmission with 24F/24R gears . . . . 25 MPH (40 KPH) with Dynamic Tractor Management (DTM) Includes: Non-suspended Front Axle and Power Assist Brakes	(4,877.00)
25-G1063	7295152	6X4 Dyna-6 Transmission with 24F/24R gears. . . . 31 MPH (50 KPH) with Dynamic Tractor Management (DTM) Includes: Suspended Front Axle and High Capacity Power Assist Brakes	2,318.00

FOR MF7722 - MF7726

25-EA655	Base	6x4 Dyna-6 Transmission with 24F/24R gears. . . . 25 MPH (40 KPH) with Dynamic Tractor Management (DTM) Includes: Suspended Power Front Axle	**In Base**
25-G1063	7295152	6X4 Dyna-6 Transmission with 24F/24R gears. . . . 31 MPH (50 KPH) with Dynamic Tractor Management (DTM) Includes: Suspended Power Front Axle & High Capacity Power Assist Brakes	2,318.00

BRAKES

FOR MF7722 - MF7726

270-EG018	7295015	High Capacity Power Assist Brakes . . . . . . Required with In Base 6x4 Transmission (EA655)	No Charge

TRANSMISSION OPTIONS FOR DYNA-VT EDITIONS

25-EA621	BASE	Dyna-VT Transmission - 31 MPH (50 KPH) . . . . . Includes: Suspended Power Front Axle & High Capacity Power Assist Brakes	**In Base**
25-A7027	7293693	Dyna-VT Transmission - 25 MPH (40 KPH) . . . . . Includes: Non-Suspended Power Front Axle & Power Assisted Main Brakes	(6,204.00)

(F.O.B. PORT OF ENTRY)

Order Code	Catalog Number	Description	Approx. Weight (lb.)	List Price
AUXILIARY HYDRAULIC FLOW				
DYNA-6				
370-DP110	Base	29 GPM (110 L/min) Closed Center Load Sensing . . .		**In Base**
370-DP150	7293529	39 GPM (150 L/min) Closed Center Load Sensing . . .		1,367.00
DYNA-VT				
370-DP110	Base	29 GPM (110 L/min) Closed Center Load Sensing . . .		**In Base**
370-DP190	7293697	50 GPM (190 L/min) Closed Center Load Sensing . . .		1,016.00
AUXILIARY VALVE 1 & 2				
50-KX011	Base	Valves 1 and 2 Electric, Fingertip Controlled Spool Valves Fingertips Located in Armrest		**In Base**
50-KX012	7293530	Valves 1 & 2 Electric with Multifunction . . . . . Joystick on the Armrest (Required when Choosing Factory Installed Loader Provisions (LL004))		1,300.00
TO UTILIZE THE FACTORY INSTALLED MULTIFUNCTION JOYSTICK WITH A LOADER, THE TRACTOR MUST BE EQUIPPED WITH THE LOADER PROVISIONS FROM THE FACTORY.				
AUXILIARY VALVE 3 & 4				
55-MU012	Base	3rd and 4th Mechanically Controlled Valves, ... with levers located in Right Hand Console Kickout, Zero Leak, Flow Dividing, Float		**In Base**
55-MU031	7293676	3rd and 4th Electric, Fingertip Controlled Valves . . . . with Fingertips located on Right Hand Console		1,358.00
POWER BEYOND				
90-GR010	Base	Power Beyond Couplers P/T/LS/D		**In Base**
90-GR000	7293665	Less Power Beyond		(716.00)
REAR AXLE				
DYNA-6				
FOR 7719 - 7722				
60-EE404	Base	Long Bar Rear Axle, 112 in. (2847 mm) long . . . . . 3.74 in. (95 mm) diameter		**In Base**
60-EE402	7293527	Short Bar Rear Axle, 84.4 in. (2144 mm) long . . . . . 3.74 in. (95 mm) diameter		(591.00)
FOR 7724 / 7726				
60-EE405	Base	Long Bar Rear Axle, 118.2 in. (3002 mm) long . . . . . 4.33 in. (110 mm) diameter		**In Base**
60-EE403	7293528	Short Bar Rear Axle, 86.7 in. (2202 mm) long . . . . . 4.33 in. (110 mm) diameter		(591.00)
DYNA-VT				
60-EE404	Base	Long Bar Rear Axle, 118.2 in. (3002mm) long, ... 3.74 in. (95 mm) diameter		**In Base**
60-EE402	7293527	Short Bar Rear Axle, 97.2 in. (2469mm) long. . . . . 3.74 in. (95 mm) diameter		(591.00)

(F.O.B. PORT OF ENTRY)

Order Code	Catalog Number	Description	Approx. Weight (lb.)	List Price
DRAWBAR				
FOR 7719 - 7722				
95-YM027	Base	Swinging Category II Drawbar w/ Clevis & Drop Pin . .		**In Base**
95-YM242	7293695	Swinging Category III Drawbar w/ Clevis & Drop Pin . .		893.00
FOR 7724 - 7726				
95-YM242	Base	Swinging Category III Drawbar w/ Clevis & Drop Pin . .		**In Base**
95-YM027	7293696	Swinging Category II Drawbar w/ Clevis & Drop Pin . .		(320.00)
REAR 3-POINT HITCH				
85-Base	Base	Category 3 Fixed Ball End Links with Category 3/3N Quick Hitch		**In Base**
85-GC009	7293694	Category 3 Fixed Ball End Links		(1,307.00)
INSTRUMENT PANEL / CONTROL CENTER DISPLAY (CCD)				
LESS AUTO-STEERING READY				
175-BA003	7293556	Analog and Digital Instrument Panel with Radar (for . . Actual Ground Speed) and Slip Control. No Control Center Display (CCD).		(5,119.00)
175-BA005	7293557	Analog and Digital Instrument Panel w/o Radar or Slip . Control. No Control Center Display (CCD).		(5,927.00)
175-BA008	7293563	Analog and Digital Instrument Panel, Control Center . . Display (CCD) with Video Input, Electric Valve Control, Radar with Slip Control and ISOBUS.		(145.00)
AUTO-STEERING READY				
175-BA012	Base	Auto-Steer Ready, Analog & Digital Instrument Panel, . Control Center Display (CCD) with Video Input, Electric Valve Control, Radar with Slip Control and ISOBUS. (Includes Roof Plate and Harness) *Order Auto-Guide™ 3000 TopDock Separately* *See Technology Section*		**In Base**
Note: The Control Center Display (CCD) is required to utilize Auto-Guide™ 3000.				
AUTO-STEERING COMPLETE				
175-BA021	7293677	Analog and Digital Instrument Panel, Control Center . . Display (CCD) with Video Input, Electric Valve Control, and ISOBUS. Radar with Slip Control. Auto-Guide™ 3000 Sub-Meter (WAAS and OmniStar VBS) Auto Steering System. (Includes Roof Plate and Harness) (Requires SpeedSteer) Auto-Guide™ 3000 uses the Control Center Display (CCD).		6,216.00
SPEEDSTEER				
185-AD004	Base	SpeedSteer Option		**In Base**
185-AD002	7293558	Less SpeedSteer . . . . . (Not Available with **In Base** and BA021 Instrument Control Panel)		(900.00)

(F.O.B. PORT OF ENTRY)

Order Code	Catalog Number	Description	Approx. Weight (lb.)	List Price

TIRES for 7719, 7720 and 7722 with Dyna-6 Transmission

TIRE BRAND SELECTION

70-Blank	7294212	Factory Brand Choice	No Charge
70-T0001	7294195	Michelin Brand Required	1,615.00
70-T0007	7294197	Firestone Brand Required	1,205.00
70-T0010	7294198	Trelleborg Brand Required	1,205.00

FRONT AND REAR TIRES

		Rear:	***Single Welded Pressed Steel - Set of 2***	
		Front:	***Fixed Welded Steel Rim***	
75-W1585	7294857B3	Rear:	710/70R38 R1W (MI, TR)	4,264.00
	7294793B1	Front:	600/65R28 R1W (MI, TR)	
75-W1716	7294858B3	Rear:	620/70R42 R1W (TR)	3,655.00
	7294793B1	Front:	600/65R28 R1W (TR)	
		Rear:	***Single Semi Dished Cast Centers- Set of 2***	
		Front:	***Waffle Wheel***	
75-Base	7294882B3	Rear:	480/80R42 R1W (18.4R42 R1W) (MI, TR)	**In Base**
	7294762B1	Front:	420/85R28 R1W (16.9R28 R1W) (MI, TR)	
75-W1377	7294882B3	Rear:	480/80R42 R1W (18.4R42 R1W) (MI, TR)	(621.00)
	7294765B1	Front:	380/85R30 R1W (14.9R30 R1W) (MI, TR)	
75-W1485	7294870B3	Rear:	520/85R42 R1W (20.8R42 R1W) (MI, TR)	902.00
	7294766B1	Front:	420/85R30 R1W (16.9R30 R1W) (MI, TR)	
75-W1325	7294870B3	Rear:	520/85R42 R1W (20.8R42 R1W) (MI)	1,354.00
	7294767B1	Front:	420/90R30 R1W (MI)	
75-W1398	7294870B3	Rear:	520/85R42 R1W (20.8R42 R1W) (MI, TR)	1,100.00
	7294770B1	Front:	380/85R34 R1W (14.9R34 R1W) (MI, TR)	
75-W1626	7294871B3	Rear:	480/80R46 R1W (18.4R46 R1W) (MI, TR)	582.00
	7294766B1	Front:	420/85R30 R1W (16.9R30 R1W) (MI, TR)	
75-W1413	7294871B3	Rear:	480/80R46 R1W (18.4R46 R1W) (MI)	1,034.00
	7294767B1	Front:	420/90R30 R1W (MI)	
75-W1349	7294871B3	Rear:	480/80R46 R1W (18.4R46 R1W) (MI, TR)	780.00
	7294770B1	Front:	380/85R34 R1W (14.9R34 R1W) (MI, TR)	
75-W1802	7294911B3	Rear:	380/90R50 R1W (FI)	1,550.00
	7294770B1	Front:	380/85R34 R1W (14.9R34 R1W) FI	
75-W1354	7294875B3	Rear:	320/90R54 R1W (MI)	3,334.00
	7294773B1	Front:	320/85R38 R1W (MI)	

(F.O.B. PORT OF ENTRY)

TIRES for 7719, 7720 and 7722 with Dyna-6 Transmission

FRONT AND REAR TIRES - CONTINUED

Order Code	Catalog Number		Description	Approx. Weight (lb.)	List Price
		Rear:	***Dual Cast Inner / Steel Outer - Set of 4***		
		Front:	***Waffle Wheel***		
75-W1386	7294886B3	Duals:	480/80R42 R1W (18.4R42 R1W) (MI, TR) . . .		6,722.00
	7294762B1	Front:	420/85R28 R1W (16.9R28 R1W) (MI, TR)		
75-W1380	7294886B3	Duals:	480/80R42 R1W (18.4R42 R1W) (MI, TR) . . .		6,101.00
	7294765B1	Front:	380/85R30 R1W (MI, TR)		
75-W1596	7294863B3	Duals:	520/85R42 R1W (20.8R42 R1W) (MI, TR) . . .		9,348.00
	7294766B1	Front:	420/85R30 R1W (16.9R30 R1W) (MI, TR)		
75-W1391	7294863B3	Duals:	520/85R42 R1W (20.8R42 R1W) (MI)		9,800.00
	7294767B1	Front:	420/90R30 R1W (MI)		
75-W1399	7294863B3	Duals:	520/85R42 R1W (20.8R42 R1W) (MI, TR) . . .		9,546.00
	7294770B1	Front:	380/85R34 R1W (14.9R34 R1W) (MI, TR)		
75-W1627	7294864B3	Duals:	480/80R46 R1W (18.4R46 R1W) (MI, TR) . . .		8,797.00
	7294766B1	Front:	420/85R30 R1W (16.9R30 R1W) (MI, TR)		
75-W1414	7294864B3	Duals:	480/80R46 R1W (18.4R46 R1W) (MI)		9,249.00
	7294767B1	Front:	420/90R30 R1W (MI)		
75-W1401	7294864B3	Duals:	480/80R46 R1W (18.4R46 R1W) (MI, TR) . . .		8,995.00
	7294770B1	Front:	380/85R34 R1W (14.9R34 R1W) (MI, TR)		
75-W1745	7294866B3	Duals:	380/90R50 R1W (14.9R50 R1W) (FI)		8,259.00
	7294770B1	Front:	380/85R34 R1W (14.9R34 R1W) (FI)		
75-W1404	7294868B3	Duals:	320/90R54 R1W (MI)		9,581.00
	7294773B1	Front:	320/85R38 R1W (MI)		
		Rear:	***Dual Cast Inner / Steel Outer - Set of 4***		
		Front:	***Welded Wheel***		
75-W1821	7294863B3	Duals:	520/85R42 R1W (20.8R42 R1W) (MI, TR) . . .		12,080.00
	7294793B1	Front:	600/65R28 R1W (MI, TR)		

(F.O.B. PORT OF ENTRY)

Order Code	Catalog Number	Description	Approx. Weight (lb.)	List Price

TIRES for 7724 and 7726 with Dyna-6 Transmission

TIRE BRAND SELECTION

70-Blank	7294212	Factory Brand Choice		No Charge
70-T0001	7294195	Michelin Brand Required		1,615.00
70-T0007	7294197	Firestone Brand Required		1,205.00
70-T0010	7294198	Trelleborg Brand Required		1,205.00

FRONT AND REAR TIRES

		Rear: ***Single Welded Pressed Steel - Set of 2*** ***Front:*** ***Fixed Welded Steel Rim***		
75-W1585	7294857B2 7294793	Rear: Front:	710/70R38 R1W (MI, TR) 600/65R28 R1W (MI, TR)	3,229.00
75-W1716	7294858B2 7294793	Rear: Front:	620/70R42 R1W (TR) 600/65R28 R1W (TR)	2,620.00
		Rear: ***Single Semi Dished Cast Centers- Set of 2*** ***Front:*** ***Waffle Wheel***		
75-Base	7294871B2 7294767	Rear: Front:	480/80R46 R1W (18.4R46 R1W) (MI) 420/90R30 R1W (MI)	**In Base**
75-W1485	7294870B2 7294766	Rear: Front:	520/85R42 R1W (20.8R42 R1W) (MI, TR) 420/85R30 R1W (16.9R30 R1W) (MI, TR)	(120.00)
75-W1398	7294870B2 7294770	Rear: Front:	520/85R42 R1W (20.8R42 R1W) (MI, TR) 380/85R34 R1W (14.9R34 R1W) (MI, TR)	73.00
75-W1384	7294882B2 7294762	Rear: Front:	480/80R42 R1W (18.4R42 R1W) (MI, TR) 420/85R28 (16.9R28 R1W) R1W (MI, TR)	(1,004.00)
75-W1325	7294870B2 7294767	Rear: Front:	520/85R42 R1W (20.8R42 R1W) (MI) 420/90R30 R1W (MI)	320.00
75-W1377	7294882B2 7294765	Rear: Front:	480/80R42 R1W (18.4R42 R1W) (MI, TR) 380/85R30 (14.9R30) R1W (MI, TR)	(1,625.00)
75-W1626	7294871B2 7294766	Rear: Front:	480/80R46 R1W (18.4R46 R1W) (MI, TR) 420/85R30 (16.9R30) R1W (MI, TR)	(440.00)
75-W1349	7294871B2 7294770	Rear: Front:	480/80R46 R1W (18.4R46 R1W) (MI, TR) 380/85R34 (14.9R34) R1W (MI, TR)	(247.00)

(F.O.B. PORT OF ENTRY)

TIRES for 7724 and 7726 with Dyna-6 Transmission

FRONT AND REAR TIRES - CONTINUED

Order Code	Catalog Number	Description	Approx. Weight (lb.)	List Price
		Rear: Dual Cast Inner / Steel Outer - Set of 4		
		Front: Waffle Wheel		
75-W1386	7294886B2	Duals: 480/80R42 R1W (18.4R42 R1W) (MI, TR) . . .		5,700.00
	7294762	Front: 420/85R28 R1W (16.9R28 R1W) (MI, TR)		
75-W1380	7294886B2	Duals: 480/80R42 R1W (18.4R42 R1W) (MI, TR) . . .		5,079.00
	7294765	Front: 380/85R30 R1W (MI, TR)		
75-W1596	7294863B2	Duals: 520/85R42 R1W (20.8R42 R1W) (MI, TR) . . .		8,326.00
	7294766	Front: 420/85R30 R1W (16.9R30 R1W) (MI, TR)		
75-W1399	7294863B2	Duals: 520/85R42 R1W (20.8R42 R1W) (MI, TR) . . .		8,519.00
	7294770	Front: 380/85R34 R1W (14.9R34 R1W) (MI, TR)		
75-W1627	7294864B2	Duals: 480/80R46 R1W (18.4R46 R1W) (MI, TR) . . .		7,774.00
	7294766	Front: 420/85R30 R1W (16.9R30 R1W) (MI, TR)		
75-W1414	7294864B2	Duals: 480/80R46 R1W (18.4R46 R1W) (MI)		8,214.00
	7294767	Front: 420/90R30 R1W (MI)		
75-W1401	7294864B2	Duals: 480/80R46 R1W (18.4R46 R1W) (MI, TR) . . .		7,967.00
	7294770	Front: 380/85R34 R1W (14.9R34 R1W) (MI, TR)		
75-W1404	7294868B2	Duals: 320/90R54 R1W (MI)		8,546.00
	7294773	Front: 320/85R38 R1W (MI)		
75-W1745	7294866B2	Duals: 380/90R50 R1W (14.9R50 R1W) (FI).		7,231.00
	7294770	Front: 380/85R34 R1W (14.9R34 R1W) (FI)		
75-W1391	7294863B2	Duals: 520/85R42 R1W (20.8R42 R1W) (MI)		8,766.00
	7294767	Front: 420/90R30 R1W (MI)		
		Rear: Dual Cast Inner / Steel Outer - Set of 4		
		Front: Welded Wheel		
75-W1821	7294863B2	Duals: 520/85R42 R1W (20.8R42 R1W) (MI, TR) . . .		11,045.00
	7294793	Front: 600/65R28 R1W (MI, TR)		

(F.O.B. PORT OF ENTRY)

Order Code	Catalog Number	Description	Approx. Weight (lb.)	List Price

TIRES for 7719, 7720 and 7722 with Dyna-VT Transmission

TIRE BRAND SELECTION

70-Blank	7294212	Factory Brand Choice	No Charge
70-T0001	7294195	Michelin Brand Required	1,615.00
70-T0002	7294196	Goodyear Brand Required	1,205.00
70-T0007	7294197	Firestone Brand Required	1,205.00
70-T0010	7294198	Trelleborg Brand Required	1,205.00

FRONT AND REAR TIRES*

***11 weeks out for changes on Jackson Built Models**

		Rear:	***Single Welded Pressed Steel - Set of 2***	
		Front:	***Fixed Welded Steel Rim***	
75-W1585	7294857B3	Rear:	710/70R38 R1W (MI, FI, GY, TR)	4,264.00
	7294793B1	Front:	600/65R28 R1W (MI, FI, GY, TR)	
75-W1716	7294858B3	Rear:	620/70R42 R1W (FI, GY, TR)	3,655.00
	7294793B1	Front:	600/65R28 R1W (FI, GY, TR)	
		Rear:	***Single Semi Dished Cast Centers- Set of 2***	
		Front:	***Waffle Wheel***	
75-Base	7294882B3	Rear:	480/80R42 R1W (18.4R42 R1W) (MI, FI, TR) .	**In Base**
	7294762B1	Front:	420/85R28 R1W (16.9R28 R1W) (MI, FI, TR)	
75-W1377	7294882B3	Rear:	480/80R42 R1W (18.4R42 R1W) (MI, FI, TR) .	(621.00)
	7294765B1	Front:	380/85R30 R1W (MI, FI, TR)	
75-W1485	7294870B3	Rear:	520/85R42 R1W (20.8R42 R1W) (MI, GY, TR).	902.00
	7294766B1	Front:	420/85R30 R1W (16.9R30 R1W) (MI, GY, TR)	
75-W1325	7294870B3	Rear:	520/85R42 R1W (20.8R42 R1W) (FI, GY) . . .	1,354.00
	7294767B1	Front:	420/90R30 R1W (FI, GY)	
75-W1398	7294870B3	Rear:	520/85R42 R1W (20.8R42 R1W) (MI, GY, TR).	1,100.00
	7294770B1	Front:	380/85R34 R1W (14.9R34 R1W) (MI, GY, TR)	
75-W1626	7294871B3	Rear:	480/80R46 R1W (18.4R46 R1W) (MI, GY, TR).	582.00
	7294766B1	Front:	420/85R30 R1W (16.9R30 R1W) (MI, GY, TR)	
75-W1413	7294871B3	Rear:	480/80R46 R1W (18.4R46 R1W) (MI, FI, GY) .	1,034.00
	7294767B1	Front:	420/90R30 R1W (MI, FI, GY)	
75-W1349	7294871B3	Rear:	480/80R46 R1W(18.4R46 R1W)(MI,FI,GY,TR).	780.00
	7294770B1	Front:	380/85R34 R1W (14.9R34 R1W) (MI, FI, GY, TR)	
75-W1862	7294921B3	Rear:	VF480/80R46 (MI)	3,870.00
	7294924B1	Front:	VF380/85R34 (MI)	
75-W1802	7294911B3	Rear:	380/90R50 R1W (FI, GY)	1,550.00
	7294770B1	Front:	380/85R34 R1W (14.9R34 R1W) (FI, GY)	
75-W1354	7294875B3	Rear:	320/90R54 R1W (MI, FI, GY)	3,334.00
	7294773B1	Front:	320/85R38 R1W (MI, FI, GY)	

(F.O.B. PORT OF ENTRY)

TIRES for 7719, 7720 and 7722 with Dyna-VT Transmission

FRONT AND REAR TIRES - CONTINUED*

***11 weeks out for changes on Jackson Built Models**

Order Code	Catalog Number		Description	Approx. Weight (lb.)	List Price
		Rear:	***Dual Cast Inner / Steel Outer - Set of 4***		
		Front:	***Waffle Wheel***		
75-W1386	7294886B3	Duals:	480/80R42 R1W (18.4R42 R1W) (MI, FI, TR) .		6,722.00
	7294762B1	Front:	420/85R28 R1W (16.9R28 R1W) (MI, FI, TR)		
75-W1380	7294886B3	Duals:	480/80R42 R1W (18.4R42 R1W) (MI, FI, TR) .		6,101.00
	7294765B1	Front:	380/85R30 R1W (MI, FI, TR)		
75-W1596	7294863B3	Duals:	520/85R42 R1W (20.8R42 R1W) (MI, GY, TR)		9,348.00
	7294766B1	Front:	420/85R30 R1W (16.9R30 R1W) (MI, GY, TR)		
75-W1391	7294863B3	Duals:	520/85R42 R1W (20.8R42 R1W) (FI, GY) . . .		9,800.00
	7294767B1	Front:	420/90R30 R1W (FI, GY)		
75-W1399	7294863B3	Duals:	520/85R42 R1W (20.8R42 R1W) (MI, GY, TR)		9,546.00
	7294770B1	Front:	380/85R34 R1W (14.9R34 R1W) (MI, GY, TR)		
75-W1627	7294864B3	Duals:	480/80R46 R1W (18.4R46 R1W) (MI, GY, TR).		8,797.00
	7294766B1	Front:	420/85R30 R1W (16.9R30 R1W) (MI, GY, TR)		
75-W1414	7294864B3	Duals:	480/80R46 R1W (18.4R46 R1W) (MI, FI, GY) .		9,249.00
	7294767B1	Front:	420/90R30 R1W (MI, FI, GY)		
75-W1401	7294864B3	Duals:	480/80R46 R1W (18.4R46 R1W) (MI,FI,GY,TR)		8,995.00
	7294770B1	Front:	380/85R34 R1W (14.9R34 R1W) (MI, FI, GY, TR)		
75-W1864	7294919B3	Duals:	VF480/80R46 R1W (MI)		13,630.00
	7294924B1	Front:	VF380/85R34 R1W (MI)		
75-W1745	7294866B3	Duals:	380/90R50 R1W (14.9R50 R1W) (FI, GY) . . .		8,259.00
	7294770B1	Front:	380/85R34 R1W (14.9R34 R1W) (FI, GY)		
75-W1404	7294868B3	Duals:	320/90R54 R1W (MI, FI, GY)		9,581.00
	7294773B1	Front:	320/85R38 R1W (MI, FI, GY)		
		Rear:	***Dual Cast Inner / Steel Outer - Set of 4***		
		Front:	***Welded Wheel***		
75-W1821	7294863B3	Duals:	520/85R42 R1W (20.8R42 R1W)(MI,FI,GY,TR)		12,080.00
	7294793B1	Front:	600/65R28 R1W (MI, FI, GY, TR)		

(F.O.B. PORT OF ENTRY)

Order Code	Catalog Number	Description	Approx. Weight (lb.)	List Price

TIRES for 7724 and 7726 with Dyna-VT Transmission

TIRE BRAND SELECTION

70-Blank	7294212	Factory Brand Choice	No Charge
70-T0001	7294195	Michelin Brand Required	1,615.00
70-T0002	7294196	Goodyear Brand Required	1,205.00
70-T0007	7294197	Firestone Brand Required	1,205.00
70-T0010	7294198	Trelleborg Brand Required	1,205.00

FRONT AND REAR TIRES

***11 weeks out for changes on Jackson Built Models**

		Rear:	***Single Welded Pressed Steel - Set of 2***	
		Front:	***Fixed Welded Steel Rim***	
75-W1585	7294857B2	Rear:	710/70R38 R1W (MI, FI, GY, TR)	3,229.00
	7294793	Front:	600/65R28 R1W (MI, FI, GY, TR)	
75-W1716	7294858B2	Rear:	620/70R42 R1W (FI, GY, TR)	2,620.00
	7294793	Front:	600/65R28 R1W (FI, GY, TR)	
		Rear:	***Single Semi Dished Cast Centers- Set of 2***	
		Front:	***Waffle Wheel***	
75-Base	7294871B2	Rear:	480/80R46 R1W (18.4R46 R1W) (MI, FI, GY) .	**In Base**
	7294767	Front:	420/90R30 R1W (MI, FI, GY)	
75-W1384	7294882B2	Rear:	480/80R42 R1W (18.4R42 R1W) (MI, FI, TR) .	(1,004.00)
	7294762	Front:	420/85R28 (16.9R28 R1W) R1W (MI, FI, TR)	
75-W1377	7294882B2	Rear:	480/80R42 R1W (18.4R42 R1W) (MI, FI, TR) .	(1,625.00)
	7294765	Front:	380/85R30 (14.9R30) R1W (MI, FI, TR)	
75-W1485	7294870B2	Rear:	520/85R42 R1W (20.8R42 R1W) (MI, GY, TR).	(120.00)
	7294766	Front:	420/85R30 R1W (16.9R30 R1W) (MI, GY, TR)	
75-W1325	7294870B2	Rear:	520/85R42 R1W (20.8R42 R1W) (FI, GY) . . .	320.00
	7294767	Front:	420/90R30 R1W (FI, GY)	
75-W1398	7294870B2	Rear:	520/85R42 R1W (20.8R42 R1W) (MI, GY, TR).	73.00
	7294770	Front:	380/85R34 (14.9R34) R1W (MI, GY, TR)	
75-W1626	7294871B2	Rear:	480/80R46 R1W (18.4R46 R1W) (MI, GY, TR).	(440.00)
	7294766	Front:	420/85R30 (16.9R30) R1W (MI, GY, TR)	
75-W1349	7294871B2	Rear:	480/80R46 R1W (18.4R46 R1W) (MI,FI,GY,TR)	(247.00)
	7294770	Front:	380/85R34 (14.9R34) R1W (MI, FI, GY, TR)	
75-W1862	7294921B2	Rear:	VF480/80R46 (MI)	2,836.00
	7294924	Front:	VF380/85R34 (MI)	

(F.O.B. PORT OF ENTRY)

TIRES for 7724 and 7726 with Dyna-VT Transmission

FRONT AND REAR TIRES - CONTINUED

***11 weeks out for changes on Jackson Built Models**

Order Code	Catalog Number		Description	Approx. Weight (lb.)	List Price
		Rear:	***Dual Cast Inner / Steel Outer - Set of 4***		
		Front:	***Waffle Wheel***		
75-W1386	7294886B2	Duals:	480/80R42 R1W (18.4R42 R1W) (MI, FI, TR) .		5,700.00
	7294762	Front:	420/85R28 R1W (16.9R28 R1W) (MI, FI, TR)		
75-W1380	7294886B2	Duals:	480/80R42 R1W (18.4R42 R1W) (MI, FI, TR) .		5,079.00
	7294765	Front:	380/85R30 R1W (MI, FI, TR)		
75-W1596	7294863B2	Duals:	520/85R42 R1W (20.8R42 R1W) (MI, GY, TR)		8,326.00
	7294766	Front:	420/85R30 R1W (16.9R30 R1W) (MI, GY, TR)		
75-W1391	7294863B2	Duals:	520/85R42 R1W (20.8R42 R1W) (FI, GY) . . .		8,766.00
	7294767	Front:	420/90R30 R1W (FI, GY)		
75-W1399	7294863B2	Duals:	520/85R42 R1W (20.8R42 R1W) (MI, GY, TR)		8,519.00
	7294770	Front:	380/85R34 R1W (14.9R34 R1W) (MI, GY, TR)		
75-W1627	7294864B2	Duals:	480/80R46 R1W (18.4R46 R1W) (MI, GY, TR).		7,774.00
	7294766	Front:	42085R30 R1W (16.9R30 R1W) (MI, GY, TR)		
75-W1414	7294864B2	Duals:	480/80R46 R1W (18.4R46 R1W) (MI, FI, GY) .		8,214.00
	7294767	Front:	420/90R30 R1W (MI, FI, GY)		
75-W1401	7294864B2	Duals:	480/80R46 R1W (18.4R46 R1W) (MI,FI,GY,TR)		7,967.00
	7294770	Front:	380/85R34 R1W (14.9R34 R1W) (MI, FI, GY, TR)		
75-W1864	7294919B2	Duals:	VF480/80R46 R1W (MI)		12,595.00
	7294924	Front:	VF380/85R34 R1W (MI)		
75-W1745	7294866B2	Duals:	380/90R50 R1W (14.9R50 R1W) (FI, GY) . . .		7,231.00
	7294770	Front:	380/85R34 R1W (14.9R34 R1W) (FI, GY)		
75-W1404	7294868B2	Duals:	320/90R54 R1W (MI, FI, GY)		8,546.00
	7294773	Front:	320/85R38 R1W (MI, FI, GY)		
		Rear:	***Dual Cast Inner / Steel Outer - Set of 4***		
		Front:	***Welded Wheel***		
75-W1821	7294863B2	Duals:	520/85R42 R1W (20.8R42 R1W) (MI,FI,GY,TR)		11,045.00
	7294793	Front:	600/65R28 R1W (MI, FI, GY, TR)		

(F.O.B. PORT OF ENTRY)

Order Code	Catalog Number	Description	Approx. Weight (lb.)	List Price
PTO				
DYNA-6 ONLY				
100-LA045	Base	2000 Engine RPM with 540/540e/1000RPM flanged PTO in Cab Control - 6 & 21 spline studs		**In Base**
100-LA100	7295156	2000 Engine RPM w/ 540e/1000e/1000RPM . . . . . flanged PTO in Cab Control - 6 & 21 spline studs		258.00
FRONT HITCH				
230-FA000	Base	Less Front Hitch		**In Base**
230-F1150*	7295131	8,818 lbs. (4000 kg) Front Linkage, Double Acting . . . Cylinder with 2 Sets of Hydraulic Couplers with Pressure Drain		6,041.00
230-F1151*	7295132	8,818 lbs. (4000 kg) Front Linkage, Double Acting . . . Cylinder with 2 Sets of Hydraulic Couplers with Pressure Drain and Belly Weight		6,938.00
230-F1152*	7295133	8,818 lbs. (4000 kg) Front Linkage, Double Acting . . . Cylinder with 2 Sets of Hydraulic Couplers with Pressure Drain and Front PTO (21 Spline Anti-Clockwise)		15,553.00
***REQUIRES: SUSPENDED FRONT AXLE AND IS NOT COMPATIBLE WITH CREEPER**				
LOADER PROVISION				
350-LL000	Base	Less Loader Provisions.		**In Base**
350-LL004	7293484	Front Loader Provisions including Hydraulics, ... Subframe. **Requires: Valves 1 and 2 Electric with a Joystick (KX012) Not Compatible with Creeper**		6,029.00
350-LL005	7295220	Front Loader Provision w/ Live 3rd-SMS Loader Control **Requires: Valves 1 and 2 Electric with a Joystick (KX012) and Less Front Hitch**		7,500.00
RADIO				
DYNA-6				
365-AF011	Base	CD Player, Bluetooth, Radio with Antenna & . . . . . Speakers (MP3 Compatible)		**In Base**
365-AF009	7294249	Radio with Antenna & Speakers (MP3 Compatible). . .		(110.00)
365-AF001	7295157	Antenna and Speakers		(195.00)
DYNA-VT				
	5020425JM	CD Player, Bluetooth, Radio with Antenna & . . . . . Speakers (MP3 Compatible)		**In Base**
	5020428JM	Radio with Antenna and Speakers (MP3 Compatible) .		(110.00)
	5020424JM	Antenna and Speakers		(190.00)

(F.O.B. PORT OF ENTRY)

Order Code	Catalog Number	Description	Approx. Weight (lb.)	List Price
CAB				
125-AE042	7293546	Superluxe Grammar Seat		1,792.00
145-AL009	7293547	Telescopic Large Side Mirrors with Electric De-Icing and Adjustment		467.00
120-AQ004	7293082	Automatic Climate Control		1,245.00
280-GZ001	7293129	Park Lock, Electronic Activated Park Brake Mounted on Shuttle Lever		2,700.00
FRONT WEIGHTS				
285-YA000	Base	Front Weight Carrier		**In Base**
285-YA112	7293487	121 lbs. (55 kgs.) Front Weights, Set of 12 with Hardware - total Weight 1,455 lbs. (660 kgs.) Not compatible with Monoblock Weights (YB003 and YB004) or Front Hitch (F1150, F1151, or F1152)		2,295.00
REAR WHEEL WEIGHTS				
325-RD040	7294192	551 lbs. (250 kgs.) Weights, Set of 2 Mounts Externally to Wheel	1102	1,845.00
325-RD041	7294200	551 lbs. (250 kgs.) Weights, Set of 4 Mounts Externally to Wheel	2204	3,689.00
BELLY AND HITCH WEIGHTS				
245-YD001	7293374	1 Belly Weight - 584 lbs. (265 kgs.) (For use **WITHOUT** Front 3-Point Hitch)	584	1,490.00
345-YB003*	7294270	1,875 lbs (850 kg) Monoblock Weight		3,406.00
345-YB004*	7294271	3,307 lbs (1500 kg) Monoblock Weight		5,677.00
***NOT COMPATIBLE WITH FRONT WEIGHTS**				
ELECTRICAL				
215-CB002	Base	Engine Block Heater - 110 Volt		**In Base**
215-CB000	7293593	Less Engine Block Heater		(204.00)
ALTERNATOR				
220-CE019	Base	Twin 120 AMP Alternators.		**In Base**
220-CE020	7293561	175 AMP Alternator. (Not Available with ISOBUS)		(380.00)
LIGHTING				
205-VF013	7293103	Dual Roof-Mounted Rotating Beacons, Left and Right (Includes SAE SMV sign)		522.00
195-VG078	7295103	2 Xenon and 2 Single Bulb Front Worklights, 2 Xenon Rear Worklights		3,392.00

(F.O.B. PORT OF ENTRY)

Order Code	Catalog Number	Description	Approx. Weight (lb.)	List Price
PIVOTING FRONT FENDERS				
155-WE110	Base	Pivoting Front Fenders - Standard Width . . . . . Width depends on tire selection; see Chart Below		**In Base**
155-WE111	7293598	Pivoting Front Fenders - Wide Width . . . . . Width depends on tire selection; see Chart Below		120.00

Fender Size		
Standard	**Wide**	**Tire Sizes**
12.6" (320 mm)	13.9" (355 mm)	320/85R34 (12.4R34) 320/85R38 (12.4R38)
14.9" (380 mm)	16.1" (410 mm)	380/85R30 (14.9R30) 380/85R34 (14.9R34) 400/80R28
16.1" (410 mm)	18.5" (470 mm)	420/85R28 (16.9R28) 420/85R30 (16.9R30) 420/90R30
18.5" (470 mm)	20.4" (520 mm)	480/70R30
20.4" (520 mm)	24.4" (620 mm)	540/65R28 540/65R30
24.4" (620 mm)	27.5" (700 mm)	600/65R28 710/55R30

REAR FENDERS				
255-WD012	Base	Rear Fenders without Extensions, 78.74"(2.00 M) . . .		**In Base**
255-WD017	7293107	Wide Fender -90.55" (2.3 M) with Rear Extension . . .		1,323.00
255-WD020	7293109	Extra Wide Fender -100.4" (2.55 M) . . . . . with Rear Extension		1,464.00

(F.O.B. PORT OF ENTRY)

Order Code	Catalog Number	Description	Approx. Weight (lb.)	List Price
MISCELLANEOUS				
35-EN001	7293092	Creeper Gear (4:1 Reduction). . . . . **(Available on Dyna-6 Editions Only)** (Not compatible with Loader Provision and/or Front Hitch)		2,366.00
250-GS001	7293100	Hydraulic Trailer Brakes		817.00
250-GS067	7293552	Pneumatic and Hydraulic Trailer Brakes		7,508.00
225-LQ001	7293553	Water Separator (Fuel Filter)		466.00
275-TC005	7294210	French Language OIB.		No Charge
275-TC011	7294211	Spanish Language OIB		No Charge

DEALER INSTALLED OPTIONS

FRONT WEIGHTS

BEAUVAIS BUILT

5020186M	8 x 55 kg (121 lbs.) Front Weights	968	1,545.00
5020187M	10 x 55 kg (121 lbs.) Front Weights	1210	1,913.00
5020188M	12 x 55 kg (121 lbs.) Front Weights	1452	2,295.00
5020189M	14 x 55 kg (121 lbs.) Front Weights	1694	2,678.00
5020190M	16 x 55 kg (121 lbs.) Front Weights	1936	3,060.00

JACKSON BUILT

5020186JM	8 x 55 kg (121 lbs.) Front Weights	968	1,545.00
5020187JM	10 x 55 kg (121 lbs.) Front Weights	1210	1,913.00
5020188JM	12 x 55 kg (121 lbs.) Front Weights	1452	2,295.00
5020189JM	14 x 55 kg (121 lbs.) Front Weights	1694	2,678.00
5020190JM	16 x 55 kg (121 lbs.) Front Weights	1936	3,060.00

REAR WEIGHT PACKAGE

BEAUVAIS BUILT

5020202M	Additional Rear Wheel Weight Package - . . . . . set of 2 x 250kg (550 lbs) 250kg Weight Adapter for 10 Bolt Hub (order weights separately)	2,029.00

JACKSON BUILT

5020202JM	Additional Rear Wheel Weight Package - . . . . . set of 2 x 250kg (550 lbs) 250kg Weight Adapter for 10 Bolt Hub (order weights separately)	2,029.00

7700 LARGE FRAME PREMIUM EDITION

MASSEY FERGUSON®

(F.O.B. PORT OF ENTRY)

PREMIUM EDITION FEATURES

ENGINE

7719 / 7720 Dyna-6, 7719 / 7720 Dyna-VT:
AP66-4: AGCO POWER™ 6.6L (402 cu in.) 6 Cylinder, Tier 4f Compliant
- SCR Technology
- Air-to-Air Aftercooled, Common Rail Injection, Turbocharged

7722 / 7724 / 7726 Dyna-6, 7722 / 7724 / 7726 Dyna-VT:
AP74-4: AGCO POWER™ 7.4L (452 cu in.) 6 Cylinder, Tier 4f Compliant
- SCR Technology
- Air-to-Air Aftercooled, Common Rail Injection, Turbocharged

Electronic Engine Management (EEM) with Dual ERPM Settings
Electronic Controlled Viscous Fan Drive
Dual Element Dry Type Air Cleaner
Vertical Exhaust at Right Front Cab Post
Cooling System: Antifreeze to Minus 30°F (-34°C)
Fuel Tank Capacity: 114 Gal (430)
DEF Tank Capacity: 11 Gal (40L)
Engine Block Heater (110V)

POWERTRAIN

Dyna-VT:
- Continuously Variable Transmission, 31 MPH (50 KPH)
- Dynamic Tractor Management (DTM) with Two Programmable Cruise Speeds
- Long Bar Rear Axle 118 in. (3002mm) Long, 3.74 in. (95mm) Diameter

Dyna-6:
- 24F/24R Semi-Powershift, 4 Ranges with 6 Powershifts per Range
- Dynamic Tractor Management (DTM) with Two Programmable Cruise Speeds

7719 / 7720 / 7722: Long Bar Rear Axle 112 in. (2847mm) Long, 3.74 in (95mm) Diameter
7724 / 7726: Long Bar Rear Axle 118.2 in. (3002mm) Long, 4.33 in. (110mm) Diameter
Multi-Disc Wet Brakes
Power Differential Lock
Independent PTO
Park Lock
Dyna-VT: 540/540E/1000/1000E RPM Flanged Shaft, 540 with 6 Spline and 1000 with 21 Spline with Electric Control
Dyna-6: 540/540E/1000 RPM Flanged Shaft, 540 with 6 Spline and 1000 with 21 Spline with Electric Control
Rear Fender Mounted PTO Shut-Off
SV1 & SV2 Settings

FRONT WHEEL ASSIST AXLE

Power Front Axle (PFA)
Suspended Front Axle
Shielded Center Drive Line with Electro-Hydraulic Control & Front Wheel Drive Differential Lock
55 Degree Steering Angle
SpeedSteer

HYDRAULICS

Closed Center Load Sensing 29 gpm (110 L/Min) Pump
2900 PSI (200 Bar) Maximum Pressure
4 Electric Valves - Fingertip Controlled, 2 Located on Armrest, 2 Located Right Hand Console
Hydrostatic Power Steering
Power Beyond
Fender Control Spool Valve Control

ELECTRICAL SYSTEM

2 – 120 Amp Alternators
2 – 12V Batteries, 600 CCA Each (SAE)
7 Pin ASAE Rear Trailer Electrical Outlet
Electrical Isolator Switch and Jumpstart Point
Ignition with Neutral Start and Key Shutoff

HITCH

3 Point Hitch: Category 3 Linkage Ball Ends with Quick Hitch
- Active Transport Control
- Lower Link Sensing
- Electronic Draft Control, Electronic Height Control, and Rate of Drop
- Rub Block Stabilizers
- Left and Right Side External 3 Point Control

7719 / 7720 / 7722: Swinging Category II Drawbar w/ Clevis & Drop Pin
7724 / 7726: Swinging Category III Drawbar w/ Clevis & Drop Pin

LIGHTING

8 Front Hood Mounted Lights
Four Front Single Bulb Worklights
Two Rear Double Bulb Worklights
Two Field Lights on Hand Rails and Rear Fenders with Taillights, Flashing Warning Lights, and Turn Signals

INSTRUMENTS

Control Center Display (CCD)
- Video Input
- Electric Valve Control
- ISOBUS Compliant

Radar with Slip Control
Tachometer: Digital and Analog
PTO Speed: Digital
Ground Speed Display: Digital
Fuel Level, DEF Level, and Coolant Temp Gauges
Warning/Information Lights

OPERATOR AREA

Instructors Seat with Seat Belt
2 Electrical Sockets
Mechanical Cab Suspension
6 Post Cab
Power Control Shuttle- Multi Pad on Armrest
Adjustable Steering Column
Front Sun Visor
Automatic Climate Control
Air Suspended Seat - Automatic Adjustment
Front and Rear Windshield Wiper/Washer
Dual Large Telescoping Outside Rear View Mirrors with De-Icing
Single Inside Rear View Mirror
CD Player, Bluetooth, Radio with Antenna & Speakers (MP3 Compatible)
3 Pin 12V Power Outlet
12V Cigarette Lighter Style Power Outlet
ISO 11783 9-Pin in Cab Connector
ISO 11786 7-Pin in Cab Connector

WHEELS AND TIRES

7719 / 7720 / 7722
Rear 480/80R42 R1W Single Semi-Dished Cast Center Wheels
Front 420/85R28 R1W Single Waffle Wheels
7724 / 7726
Rear 480/80R46 R1W Single Semi-Dished Cast Center Wheels
Front 420/90R30 R1W Single Waffle Wheels

OTHER STANDARD FEATURES

Auto-Steer Complete: Auto-Guide™ 3000 Sub-Meter (WAAS and OmniStar VBS)
Auto Steering System using the Control Center Display (CCD)
AGCOMMAND™ Equipped w/ Antenna, Bracket, Harness & Telemetry Module, Includes: AGCOMMAND™ Advanced (1 Year Subscription, Must be activated within 12 months of warranty registration)
Lockable Tool Box
SMV Sign
Molded Rear Fenders
English Literature

(F.O.B. PORT OF ENTRY)

Order Code	Catalog Number	Description	Approx. Weight (lb.)	List Price

ONE *ORDER CODE* FROM EACH GROUP MUST BE SPECIFIED. (Unless In Base Option is desired)

BASE MACHINE

DYNA-6 EDITIONS-- Beauvais Built

MF7719~D6~EX~02	7295205	Massey 7719 Premium Tractor 145 PTO HP	187,657.00
MF7720~D6~EX~02	7295206	Massey 7720 Premium Tractor 155 PTO HP	193,925.00
MF7722~D6~EX~02	7295207	Massey 7722 Premium Tractor 165 PTO HP	203,328.00
MF7724~D6~EX~02	7295208	Massey 7724 Premium Tractor 180 PTO HP	214,109.00
MF7726~D6~EX~02	7295209	Massey 7726 Premium Tractor 200 PTO HP	223,237.00

DYNA-VT EDITIONS-- Jackson Built

MF7719~DV~EX~02	7295215	Massey 7719 Premium Tractor 145 PTO HP	199,580.00
MF7720~DV~EX~02	7295216	Massey 7720 Premium Tractor 155 PTO HP	205,849.00
MF7722~DV~EX~02	7295217	Massey 7722 Premium Tractor 165 PTO HP	215,251.00
MF7724~DV~EX~02	7295218	Massey 7724 Premium Tractor 180 PTO HP	226,032.00
MF7726~DV~EX~02	7295219	Massey 7726 Premium Tractor 200 PTO HP	235,161.00

TRANSMISSION OPTIONS FOR DYNA-6 EDITIONS

FOR MF7719 - MF7720

25-EA656	Base	6x4 Dyna-6 Transmission with 24F/24R gears. . . . 31 MPH (50 KPH) with Dynamic Tractor Management (DTM). Includes Suspended Front Axle and High Capacity Power Assist Brakes	**In Base**
25-G1064	7295158	6X4 Dyna-6 Transmission with 24F/24R gears . . . . 25 MPH (40 KPH) with Dynamic Tractor Management (DTM) Includes: Suspended Front Axle and Power Assist Brakes	(1,327.00)

FOR MF7722 - MF7726

25-EA656	Base	6x4 Dyna-6 Transmission with 24F/24R gears. . . . 31 MPH (50 KPH) with Dynamic Tractor Management (DTM). Includes: Suspended Power Front Axle & High Capacity Power Assist Brakes	**In Base**

TRANSMISSION OPTIONS FOR DYNA-VT EDITIONS

25-EA622	BASE	Dyna-VT Transmission - 31 MPH (50 KPH) . . . . . Includes: Suspended Power Front Axle & High Capacity Power Assist Brakes	**In Base**

(F.O.B. PORT OF ENTRY)

Order Code	Catalog Number	Description	Approx. Weight (lb.)	List Price
AUXILIARY HYDRAULIC FLOW				
DYNA-6				
370-DP110	Base	29 GPM (110 L/min) Closed Center Load Sensing . . .		**In Base**
370-DP150	7293529	39 GPM (150 L/min) Closed Center Load Sensing . . .		1,367.00
DYNA-VT				
370-DP110	Base	29 GPM (110 L/min) Closed Center Load Sensing . . .		**In Base**
370-DP190	7293697	50 GPM (150 L/min) Closed Center Load Sensing . . .		1,016.00
AUXILIARY VALVE 1 & 2				
50-KX011	Base	Valves 1 and 2 Electric, Fingertip Controlled Spool Valves Fingertips Located in Armrest		**In Base**
50-KX012	7293530	Valves 1 & 2 Electric with Multifunction . . . . . Joystick on the Armrest (Required when Choosing Factory Installed Loader Provisions (LL004))		1,300.00
TO UTILIZE THE FACTORY INSTALLED MULTIFUNCTION JOYSTICK WITH A LOADER, THE TRACTOR MUST BE EQUIPPED WITH THE LOADER PROVISIONS FROM THE FACTORY.				
AUXILIARY VALVE 3, 4 & 5				
55-MU031	Base	3rd and 4th Electric, Fingertip Controlled Valves . . . . with Fingertips located on Right Hand Console		**In Base**
55-MU041	7293534	3rd, 4th, and 5th Electric, Controlled Valves . . . . . with 3 and 4 Fingertips located on Right Hand Console and the 5th Control located on the Multicontroller Control		1,848.00
POWER BEYOND				
90-GR010	Base	Power Beyond Couplers P/T/LS/D		**In Base**
90-GR000	7293665	Less Power Beyond		(716.00)
REAR AXLE				
DYNA-6				
FOR 7719 - 7722				
60-EE404	Base	Long Bar Rear Axle, 112 in. (2847 mm) long . . . . . 3.74 in. (95 mm) diameter		**In Base**
60-EE402	7293527	Short Bar Rear Axle, 84.4 in. (2144 mm) long . . . . . 3.74 in. (95 mm) diameter		(591.00)
FOR 7724 / 7726				
60-EE405	Base	Long Bar Rear Axle, 118.2 in. (3002 mm) long . . . . . 4.33 in. (110 mm) diameter		**In Base**
60-EE403	7293528	Short Bar Rear Axle, 86.7 in. (2202 mm) long . . . . . 4.33 in. (110 mm) diameter		(591.00)
DYNA-VT				
60-EE404	Base	Long Bar Rear Axle, 118 in. (3002 mm) long, ... 3.74 in. (95 mm) diameter		**In Base**
60-EE402	7293527	Short Bar Rear Axle, 97.2 in. (2469 mm) long. . . . . 3.74 in. (95 mm) diameter		(591.00)

(F.O.B. PORT OF ENTRY)

Order Code	Catalog Number	Description	Approx. Weight (lb.)	List Price
DRAWBAR				
FOR 7719 - 7722				
95-YM027	Base	Swinging Category II Drawbar w/ Clevis & Drop Pin . .		**In Base**
95-YM242	7293695	Swinging Category III Drawbar w/ Clevis & Drop Pin . .		893.00
FOR 7724 - 7726				
95-YM242	Base	Swinging Category III Drawbar w/ Clevis & Drop Pin . .		**In Base**
95-YM027	7293696	Swinging Category II Drawbar w/ Clevis & Drop Pin . .		(320.00)
REAR 3-POINT HITCH				
85-Base	Base	Category 3 Fixed Ball End Links with Category 3/3N Quick Hitch		**In Base**
85-GC009	7293694	Category 3 Fixed Ball End Links		(1,307.00)
INSTRUMENT PANEL / CONTROL CENTER DISPLAY (CCD)				
LESS AUTO-STEERING READY				
175-BA008	7293679	Analog and Digital Instrument Panel, Control Center . . Display (CCD) with Video Input, Electric Valve Control, Radar with Slip Control and ISOBUS.		(4,973.00)
AUTO-STEERING READY				
175-BA012	7293678	Analog and Digital Instrument Panel, Control Center . . Display (CCD) with Video Input, Electric Valve Control, Radar with Slip Control and ISOBUS. (Includes Roof Plate and Wiring Harness) *Order Auto-Guide™ 3000 TopDock Separately* *See Technology Section*		(4,828.00)
		Note: The Control Center Display (CCD) is required to utilize Auto-Guide™ 3000.		
AUTO-STEERING COMPLETE				
175-BA021	Base	Auto- Steer Ready, Analog & Digital Instrument Panel, Control Center Display (CCD) with Video Input, Electric Valve Control, and ISOBUS. Radar with Slip Control. Auto-Guide™ 3000 Sub-Meter (WAAS and OmniStar VBS) Auto Steering System. (Includes Roof Plate and Wiring Harness) (Requires SpeedSteer) Auto-Guide™ 3000 uses the Control Center Display (CCD).		**In Base**
SPEEDSTEER				
185-AD004	Base	SpeedSteer Option		**In Base**

(F.O.B. PORT OF ENTRY)

Order Code	Catalog Number	Description	Approx. Weight (lb.)	List Price

TIRES for 7719, 7720 and 7722 with Dyna-6 Transmission

TIRE BRAND SELECTION

70-Blank	7294212	Factory Brand Choice	No Charge
70-T0001	7294195	Michelin Brand Required	1,615.00
70-T0007	7294197	Firestone Brand Required	1,205.00
70-T0010	7294198	Trelleborg Brand Required	1,205.00

FRONT AND REAR TIRES

		Rear:	***Single Welded Pressed Steel - Set of 2***	
		Front:	***Fixed Welded Steel Rim***	
75-W1585	7294857B3	Rear:	710/70R38 R1W (MI, TR)	4,264.00
	7294793B1	Front:	600/65R28 R1W (MI, TR)	
75-W1716	7294858B3	Rear:	620/70R42 R1W (TR)	3,655.00
	7294793B1	Front:	600/65R28 R1W (TR)	
		Rear:	***Single Semi Dished Cast Centers- Set of 2***	
		Front:	***Waffle Wheel***	
75-Base	7294882B3	Rear:	480/80R42 R1W (18.4R42 R1W) (MI, TR)	**In Base**
	7294762B1	Front:	420/85R28 R1W (16.9R28 R1W) (MI, TR)	
75-W1377	7294882B3	Rear:	480/80R42 R1W (18.4R42 R1W) (MI, TR)	(621.00)
	7294765B1	Front:	380/85R30 R1W (14.9R30 R1W) (MI, TR)	
75-W1485	7294870B3	Rear:	520/85R42 R1W (20.8R42 R1W) (MI, TR)	902.00
	7294766B1	Front:	420/85R30 R1W (16.9R30 R1W) (MI, TR)	
75-W1325	7294870B3	Rear:	520/85R42 R1W (20.8R42 R1W) (MI)	1,354.00
	7294767B1	Front:	420/90R30 R1W (MI)	
75-W1398	7294870B3	Rear:	520/85R42 R1W (20.8R42 R1W) (MI, TR)	1,100.00
	7294770B1	Front:	380/85R34 R1W (14.9R34 R1W) (MI, TR)	
75-W1626	7294871B3	Rear:	480/80R46 R1W (18.4R46 R1W) (MI, TR)	582.00
	7294766B1	Front:	420/85R30 R1W (16.9R30 R1W) (MI, TR)	
75-W1413	7294871B3	Rear:	480/80R46 R1W (18.4R46 R1W) (MI)	1,034.00
	7294767B1	Front:	420/90R30 R1W (MI)	
75-W1349	7294871B3	Rear:	480/80R46 R1W (18.4R46 R1W) (MI, TR)	780.00
	7294770B1	Front:	380/85R34 R1W (14.9R34 R1W) (MI, TR)	
75-W1802	7294911B3	Rear:	380/90R50 R1W (FI)	1,550.00
	7294770B1	Front:	380/85R34 R1W (14.9R34 R1W) (FI)	
75-W1354	7294875B3	Rear:	320/90R54 R1W (MI)	3,334.00
	7294773B1	Front:	320/85R38 R1W (MI)	

(F.O.B. PORT OF ENTRY)

TIRES for 7719, 7720 and 7722 with Dyna-6 Transmission

FRONT AND REAR TIRES - CONTINUED

Order Code	Catalog Number		Description	Approx. Weight (lb.)	List Price
		Rear:	***Dual Cast Inner / Steel Outer - Set of 4***		
		Front:	***Waffle Wheel***		
75-W1386	7294886B3	Duals:	480/80R42 R1W (18.4R42 R1W) (MI, TR) . . .		6,722.00
	7294762B1	Front:	420/85R28 R1W (16.9R28 R1W) (MI, TR)		
75-W1380	7294886B3	Duals:	480/80R42 R1W (18.4R42 R1W) (MI, TR) . . .		6,101.00
	7294765B1	Front:	380/85R30 R1W (MI, TR)		
75-W1596	7294863B3	Duals:	520/85R42 R1W (20.8R42 R1W) (MI, TR) . . .		9,348.00
	7294766B1	Front:	420/85R30 R1W (16.9R30 R1W) (MI, TR)		
75-W1391	7294863B3	Duals:	520/85R42 R1W (20.8R42 R1W) (MI)		9,800.00
	7294767B1	Front:	420/90R30 R1W (MI)		
75-W1399	7294863B3	Duals:	520/85R42 R1W (20.8R42 R1W) (MI, TR) . . .		9,546.00
	7294770B1	Front:	380/85R34 R1W (14.9R34 R1W) (MI, TR)		
75-W1627	7294864B3	Duals:	480/80R46 R1W (18.4R46 R1W) (MI, TR) . . .		8,797.00
	7294766B1	Front:	420/85R30 R1W (16.9R30 R1W) (MI, TR)		
75-W1414	7294864B3	Duals:	480/80R46 R1W (18.4R46 R1W) (MI)		9,249.00
	7294767B1	Front:	420/90R30 R1W (MI)		
75-W1401	7294864B3	Duals:	480/80R46 R1W (18.4R46 R1W) (MI, TR) . . .		8,995.00
	7294770B1	Front:	380/85R34 R1W (14.9R34 R1W) (MI, TR)		
75-W1745	7294866B3	Duals:	380/90R50 R1W (14.9R50 R1W) (FI)		8,259.00
	7294770B1	Front:	380/85R34 R1W (14.9R34 R1W) (FI)		
75-W1404	7294868B3	Duals:	320/90R54 R1W (MI)		9,581.00
	7294773B1	Front:	320/85R38 R1W (MI)		
		Rear:	***Dual Cast Inner / Steel Outer - Set of 4***		
		Front:	***Welded Wheel***		
75-W1821	7294863B3	Duals:	520/85R42 R1W (20.8R42 R1W) (MI, TR) . . .		12,080.00
	7294793B1	Front:	600/65R28 R1W (MI, TR)		

(F.O.B. PORT OF ENTRY)

Order Code	Catalog Number	Description	Approx. Weight (lb.)	List Price

TIRES for 7724 and 7726 with Dyna-6 Transmission

TIRE BRAND SELECTION

70-Blank	7294212	Factory Brand Choice		No Charge
70-T0001	7294195	Michelin Brand Required		1,615.00
70-T0007	7294197	Firestone Brand Required		1,205.00
70-T0010	7294198	Trelleborg Brand Required		1,205.00

FRONT AND REAR TIRES

		Rear: ***Front:***	***Single Welded Pressed Steel - Set of 2*** ***Fixed Welded Steel Rim***	
75-W1585	7294857B2 7294793	Rear: Front:	710/70R38 R1W (MI, TR) 600/65R28 R1W (MI, TR)	3,229.00
75-W1716	7294858B2 7294793	Rear: Front:	620/70R42 R1W (TR) 600/65R28 R1W (TR)	2,620.00
		Rear: ***Front:***	***Single Semi Dished Cast Centers- Set of 2*** ***Waffle Wheel***	
75-Base	7294871B2 7294767	Rear: Front:	480/80R46 R1W (18.4R46 R1W) (MI) 420/90R30 R1W (MI)	**In Base**
75-W1485	7294870B2 7294766	Rear: Front:	520/85R42 R1W (20.8R42 R1W) (MI, TR) 420/85R30 R1W (16.9R30 R1W) (MI, TR)	(120.00)
75-W1398	7294870B2 7294770	Rear: Front:	520/85R42 R1W (20.8R42 R1W) (MI, TR) 380/85R34 R1W (14.9R34 R1W) (MI, TR)	73.00
75-W1384	7294882B2 7294762	Rear: Front:	480/80R42 R1W (18.4R42 R1W) (MI, TR) 420/85R28 (16.9R28 R1W) R1W (MI, TR)	(1,004.00)
75-W1325	7294870B2 7294767	Rear: Front:	520/85R42 R1W (20.8R42 R1W) (MI) 420/90R30 R1W (MI)	320.00
75-W1377	7294882B2 7294765	Rear: Front:	480/80R42 R1W (18.4R42 R1W) (MI, TR) 380/85R30 (14.9R30) R1W (MI, TR)	(1,625.00)
75-W1626	7294871B2 7294766	Rear: Front:	480/80R46 R1W (18.4R46 R1W) (MI, TR) 420/85R30 (16.9R30) R1W (MI, TR)	(440.00)
75-W1349	7294871B2 7294770	Rear: Front:	480/80R46 R1W (18.4R46 R1W) (MI, TR) 380/85R34 (14.9R34) R1W (MI, TR)	(247.00)

(F.O.B. PORT OF ENTRY)

TIRES for 7724 and 7726 with Dyna-6 Transmission

FRONT AND REAR TIRES - CONTINUED

Order Code	Catalog Number	Description	Approx. Weight (lb.)	List Price
		Rear: Dual Cast Inner / Steel Outer - Set of 4		
		Front: Waffle Wheel		
75-W1386	7294886B2	Duals: 480/80R42 R1W (18.4R42 R1W) (MI, TR) . . .		5,700.00
	7294762	Front: 420/85R28 R1W (16.9R28 R1W) (MI, TR)		
75-W1380	7294886B2	Duals: 480/80R42 R1W (18.4R42 R1W) (MI, TR) . . .		5,079.00
	7294765	Front: 380/85R30 R1W (MI, TR)		
75-W1596	7294863B2	Duals: 520/85R42 R1W (20.8R42 R1W) (MI, TR) . . .		8,326.00
	7294766	Front: 420/85R30 R1W (16.9R30 R1W) (MI, TR)		
75-W1391	7294863B2	Duals: 520/85R42 R1W (20.8R42 R1W) (MI, TR) . . .		8,766.00
	7294767	Front: 420/90R30 R1W (MI, TR)		
75-W1399	7294863B2	Duals: 520/85R42 R1W (20.8R42 R1W) (MI, TR) . . .		8,519.00
	7294770	Front: 380/85R34 R1W (14.9R34 R1W) (MI, TR)		
75-W1627	7294864B2	Duals: 480/80R46 R1W (18.4R46 R1W) (MI, TR) . . .		7,774.00
	7294766	Front: 420/85R30 R1W (16.9R30 R1W) (MI, TR)		
75-W1414	7294864B2	Duals: 480/80R46 R1W (18.4R46 R1W) (MI)		8,214.00
	7294767	Front: 420/90R30 R1W (MI)		
75-W1401	7294864B2	Duals: 480/80R46 R1W (18.4R46 R1W) (MI, TR) . . .		7,967.00
	7294770	Front: 380/85R34 R1W (14.9R34 R1W) (MI, TR)		
75-W1404	7294868B2	Duals: 320/90R54 R1W (MI)		8,546.00
	7294773	Front: 320/85R38 R1W (MI)		
75-W1745	7294866B2	Duals: 380/90R50 R1W (14.9R50 R1W) (FI).		7,231.00
	7294770	Front: 380/85R34 R1W (14.9R34 R1W) (FI)		
		Rear: Dual Cast Inner / Steel Outer - Set of 4		
		Front: Welded Wheel		
75-W1821	7294863B2	Duals: 520/85R42 R1W (20.8R42 R1W) (MI, TR) . . .		11,045.00
	7294793	Front: 600/65R28 R1W (MI, TR)		

(F.O.B. PORT OF ENTRY)

Order Code	Catalog Number	Description	Approx. Weight (lb.)	List Price

TIRES for 7719, 7720 and 7722 with Dyna-VT Transmission

TIRE BRAND SELECTION

70-Blank	7294212	Factory Brand Choice	No Charge
70-T0001	7294195	Michelin Brand Required	1,615.00
70-T0002	7294196	Goodyear Brand Required	1,205.00
70-T0007	7294197	Firestone Brand Required	1,205.00
70-T0010	7294198	Trelleborg Brand Required	1,205.00

FRONT AND REAR TIRES*

***11 weeks out for changes on Jackson Built Models**

		Rear:	***Single Welded Pressed Steel - Set of 2***	
		Front:	***Fixed Welded Steel Rim***	
75-W1585	7294857B3	Rear:	710/70R38 R1W (MI, FI, GY, TR)	4,264.00
	7294793B1	Front:	600/65R28 R1W (MI, FI, GY, TR)	
75-W1716	7294858B3	Rear:	620/70R42 R1W (FI, GY, TR)	3,655.00
	7294793B1	Front:	600/65R28 R1W (FI, GY, TR)	
		Rear:	***Single Semi Dished Cast Centers- Set of 2***	
		Front:	***Waffle Wheel***	
75-Base	7294882B3	Rear:	480/80R42 R1W (18.4R42 R1W) (MI, FI, TR)	**In Base**
	7294762B1	Front:	420/85R28 R1W (16.9R28 R1W) (MI, FI, TR)	
75-W1377	7294882B3	Rear:	480/80R42 R1W (18.4R42 R1W) (MI, FI, TR)	(621.00)
	7294765B1	Front:	380/85R30 R1W (MI, FI, TR)	
75-W1485	7294870B3	Rear:	520/85R42 R1W (20.8R42 R1W) (MI, GY, TR)	902.00
	7294766B1	Front:	420/85R30 R1W (16.9R30 R1W) (MI, GY, TR)	
75-W1325	7294870B3	Rear:	520/85R42 R1W (20.8R42 R1W) (FI, GY)	1,354.00
	7294767B1	Front:	420/90R30 R1W (FI, GY)	
75-W1398	7294870B3	Rear:	520/85R42 R1W (20.8R42 R1W) (MI, GY, TR)	1,100.00
	7294770B1	Front:	380/85R34 R1W (14.9R34 R1W) (MI, GY, TR)	
75-W1626	7294871B3	Rear:	480/80R46 R1W (18.4R46 R1W) (MI, GY, TR)	582.00
	7294766B1	Front:	420/85R30 R1W (16.9R30 R1W) (MI, GY, TR)	
75-W1413	7294871B3	Rear:	480/80R46 R1W (18.4R46 R1W) (MI, FI, GY)	1,034.00
	7294767B1	Front:	420/90R30 R1W (MI, FI, GY)	
75-W1349	7294871B3	Rear:	480/80R46 R1W(18.4R46 R1W)(MI,FI,GY,TR)	780.00
	7294770B1	Front:	380/85R34 R1W (14.9R34 R1W) (MI, FI, GY, TR)	
75-W1862	7294921B3	Rear:	VF480/80R46 (MI)	3,870.00
	7294924B1	Front:	VF380/85R34 (MI)	
75-W1802	7294911B3	Rear:	380/90R50 R1W (FI, GY)	1,550.00
	7294770B1	Front:	380/85R34 R1W (14.9R34 R1W) (FI, GY)	
75-W1354	7294875B3	Rear:	320/90R54 R1W (MI, FI, GY)	3,334.00
	7294773B1	Front:	320/85R38 R1W (MI, FI, GY)	

(F.O.B. PORT OF ENTRY)

TIRES for 7719, 7720 and 7722 with Dyna-VT Transmission

FRONT AND REAR TIRES - CONTINUED*

***11 weeks out for changes on Jackson Built Models**

Order Code	Catalog Number		Description	Approx. Weight (lb.)	List Price
		Rear:	***Dual Cast Inner / Steel Outer - Set of 4***		
		Front:	***Waffle Wheel***		
75-W1386	7294886B3	Duals:	480/80R42 R1W (18.4R42 R1W) (MI, FI, TR) .		6,722.00
	7294762B1	Front:	420/85R28 R1W (16.9R28 R1W) (MI, FI, TR)		
75-W1380	7294886B3	Duals:	480/80R42 R1W (18.4R42 R1W) (MI, FI, TR) .		6,101.00
	7294765B1	Front:	380/85R30 R1W (MI, FI, TR)		
75-W1596	7294863B3	Duals:	520/85R42 R1W (20.8R42 R1W) (MI, GY, TR)		9,348.00
	7294766B1	Front:	420/85R30 R1W (16.9R30 R1W) (MI, GY, TR)		
75-W1391	7294863B3	Duals:	520/85R42 R1W (20.8R42 R1W) (FI, GY) . . .		9,800.00
	7294767B1	Front:	420/90R30 R1W (FI, GY)		
75-W1399	7294863B3	Duals:	520/85R42 R1W (20.8R42 R1W) (MI, GY, TR)		9,546.00
	7294770B1	Front:	380/85R34 R1W (14.9R34 R1W) (MI, GY, TR)		
75-W1627	7294864B3	Duals:	480/80R46 R1W (18.4R46 R1W) (MI, GY, TR).		8,797.00
	7294766B1	Front:	420/85R30 R1W (16.9R30 R1W) (MI, GY, TR)		
75-W1414	7294864B3	Duals:	480/80R46 R1W (18.4R46 R1W) (MI, FI, GY) .		9,249.00
	7294767B1	Front:	420/90R30 R1W (MI, FI, GY)		
75-W1401	7294864B3	Duals:	480/80R46 R1W (18.4R46 R1W) (MI,FI,GY,TR)		8,995.00
	7294770B1	Front:	380/85R34 R1W (14.9R34 R1W) (MI, FI, GY, TR)		
75-W1864	7294919B3	Duals:	VF480/80R46 R1W (MI)		13,630.00
	7294924B1	Front:	VF380/85R34 R1W (MI)		
75-W1745	7294866B3	Duals:	380/90R50 R1W (14.9R50 R1W) (FI, GY) . . .		8,259.00
	7294770B1	Front:	380/85R34 R1W (14.9R34 R1W) (FI, GY)		
75-W1404	7294868B3	Duals:	320/90R54 R1W (MI, FI, GY)		9,581.00
	7294773B1	Front:	320/85R38 R1W (MI, FI, GY)		
		Rear:	***Dual Cast Inner / Steel Outer - Set of 4***		
		Front:	***Welded Wheel***		
75-W1821	7294863B3	Duals:	520/85R42 R1W (20.8R42 R1W)(MI,FI,GY,TR)		12,080.00
	7294793B1	Front:	600/65R28 R1W (MI, FI, GY, TR)		

(F.O.B. PORT OF ENTRY)

TIRES for 7724 and 7726 with Dyna-VT Transmission

TIRE BRAND SELECTION

Order Code	Catalog Number	Description	Approx. Weight (lb.)	List Price
70-Blank	7294212	Factory Brand Choice		No Charge
70-T0001	7294195	Michelin Brand Required		1,615.00
70-T0002	7294196	Goodyear Brand Required		1,205.00
70-T0007	7294197	Firestone Brand Required		1,205.00
70-T0010	7294198	Trelleborg Brand Required		1,205.00

FRONT AND REAR TIRES

***11 weeks out for changes on Jackson Built Models**

		Rear:	***Single Welded Pressed Steel - Set of 2***	
		Front:	***Fixed Welded Steel Rim***	
75-W1585	7294857B2	Rear:	710/70R38 R1W (MI, FI, GY, TR)	3,229.00
	7294793	Front:	600/65R28 R1W (MI, FI, GY , TR)	
75-W1716	7294858B2	Rear:	620/70R42 R1W (FI, GY, TR)	2,620.00
	7294793	Front:	600/65R28 R1W (FI, GY, TR)	
		Rear:	***Single Semi Dished Cast Centers- Set of 2***	
		Front:	***Waffle Wheel***	
75-Base	7294871B2	Rear:	480/80R46 R1W (18.4R46 R1W) (MI, FI, GY)	**In Base**
	7294767	Front:	420/90R30 R1W (MI, FI, GY)	
75-W1384	7294882B2	Rear:	480/80R42 R1W (18.4R42 R1W) (MI, FI, TR)	(1,004.00)
	7294762	Front:	420/85R28 (16.9R28 R1W) R1W (MI, FI, TR)	
75-W1377	7294882B2	Rear:	480/80R42 R1W (18.4R42 R1W) (MI, FI, TR)	(1,625.00)
	7294765	Front:	380/85R30 (14.9R30) R1W (MI, FI, TR)	
75-W1485	7294870B2	Rear:	520/85R42 R1W (20.8R42 R1W) (MI, GY, TR)	(120.00)
	7294766	Front:	420/85R30 R1W (16.9R30 R1W) (MI, GY, TR)	
75-W1325	7294870B2	Rear:	520/85R42 R1W (20.8R42 R1W) (FI, GY)	320.00
	7294767	Front:	420/90R30 R1W (FI, GY)	
75-W1398	7294870B2	Rear:	520/85R42 R1W (20.8R42 R1W) (MI, GY, TR)	73.00
	7294770	Front:	380/85R34 (14.9R34) R1W (MI, GY, TR)	
75-W1626	7294871B2	Rear:	480/80R46 R1W (18.4R46 R1W) (MI, GY, TR)	(440.00)
	7294766	Front:	420/85R30 (16.9R30) R1W (MI, GY, TR)	
75-W1349	7294871B2	Rear:	480/80R46 R1W (18.4R46 R1W) (MI,FI,GY,TR)	(247.00)
	7294770	Front:	380/85R34 (14.9R34) R1W (MI, FI, GY, TR)	
75-W1862	7294921B2	Rear:	VF480/80R46 (MI)	2,836.00
	7294924	Front:	VF380/85R34 (MI)	

(F.O.B. PORT OF ENTRY)

TIRES for 7724 and 7726 with Dyna-VT Transmission

FRONT AND REAR TIRES - CONTINUED

***11 weeks out for changes on Jackson Built Models**

Order Code	Catalog Number		Description	Approx. Weight (lb.)	List Price
		Rear:	***Dual Cast Inner / Steel Outer - Set of 4***		
		Front:	***Waffle Wheel***		
75-W1386	7294886B2	Duals:	480/80R42 R1W (18.4R42 R1W) (MI, FI, TR) .		5,700.00
	7294762	Front:	420/85R28 R1W (16.9R28 R1W) (MI, FI, TR)		
75-W1380	7294886B2	Duals:	480/80R42 R1W (18.4R42 R1W) (MI, FI, TR) .		5,079.00
	7294765	Front:	380/85R30 R1W (MI, FI, TR)		
75-W1596	7294863B2	Duals:	520/85R42 R1W (20.8R42 R1W) (MI, GY, TR)		8,326.00
	7294766	Front:	420/85R30 R1W (16.9R30 R1W) (MI, GY, TR)		
75-W1391	7294863B2	Duals:	520/85R42 R1W (20.8R42 R1W) (FI, GY) . . .		8,766.00
	7294767	Front:	420/90R30 R1W (FI, GY)		
75-W1399	7294863B2	Duals:	520/85R42 R1W (20.8R42 R1W) (MI, GY, TR)		8,519.00
	7294770	Front:	380/85R34 R1W (14.9R34 R1W) (MI, GY, TR)		
75-W1627	7294864B2	Duals:	480/80R46 R1W (18.4R46 R1W) (MI, GY, TR).		7,774.00
	7294766	Front:	42085R30 R1W (16.9R30 R1W) (MI, GY, TR)		
75-W1414	7294864B2	Duals:	480/80R46 R1W (18.4R46 R1W) (MI, FI, GY) .		8,214.00
	7294767	Front:	420/90R30 R1W (MI, FI, GY)		
75-W1401	7294864B2	Duals:	480/80R46 R1W (18.4R46 R1W) (MI,FI,GY,TR)		7,967.00
	7294770	Front:	380/85R34 R1W (14.9R34 R1W) (MI, FI, GY, TR)		
75-W1864	7294919B2	Duals:	VF480/80R46 R1W (MI)		12,595.00
	7294924	Front:	VF380/85R34 R1W (MI)		
75-W1745	7294866B2	Duals:	380/90R50 R1W (14.9R50 R1W) (FI, GY) . . .		7,231.00
	7294770	Front:	380/85R34 R1W (14.9R34 R1W) (FI, GY)		
75-W1404	7294868B2	Duals:	320/90R54 R1W (MI, FI, GY)		8,546.00
	7294773	Front:	320/85R38 R1W (MI, FI, GY)		
		Rear:	***Dual Cast Inner / Steel Outer - Set of 4***		
		Front:	***Welded Wheel***		
75-W1821	7294863B2	Duals:	520/85R42 R1W (20.8R42 R1W) (MI,FI,GY,TR)		11,045.00
	7294793	Front:	600/65R28 R1W (MI, FI, GY, TR)		

(F.O.B. PORT OF ENTRY)

Order Code	Catalog Number	Description	Approx. Weight (lb.)	List Price
PTO				
DYNA-6 ONLY				
100-LA045	Base	2000 Engine RPM with 540/540e/1000RPM flanged PTO in Cab Control - 6 & 21 spline studs		**In Base**
100-LA100	7295156	2000 Engine RPM with 540e/1000e/1000RPM . . . . . flanged PTO, in Cab Control - 6 & 21 spline studs		258.00
FRONT HITCH				
230-FA000	Base	Less Front Hitch		**In Base**
230-F1150*	7295131	8,818 lbs. (4000 kg) Front Linkage, Double Acting . . . Cylinder with 2 Sets of Hydraulic Couplers with Pressure Drain		6,041.00
230-F1151*	7295132	8,818 lbs. (4000 kg) Front Linkage, Double Acting . . . Cylinder with 2 Sets of Hydraulic Couplers with Pressure Drain and Belly Weight		6,938.00
230-F1152*	7295133	8,818 lbs. (4000 kg) Front Linkage, Double Acting . . . Cylinder with 2 Sets of Hydraulic Couplers with Pressure Drain and Front PTO (21 Spline Anti-Clockwise)		15,553.00
***REQUIRES: SUSPENDED FRONT AXLE AND IS NOT COMPATIBLE WITH CREEPER**				
LOADER PROVISION				
350-LL000	Base	Less Loader Provisions . . . . . (**Requires In Base Power Beyond)**		**In Base**
350-LL004	7293484	Front Loader Provisions including Hydraulics, ... Subframe. **Requires: Valves 1 and 2 Electric with a Joystick (KX012) Not Compatible with Creeper**		6,029.00
350-LL005	7295220	Front Loader Provision w/ Live 3rd-SMS Loader Control **Requires: Valves 1 and 2 Electric with a Joystick (KX012) and Less Front Hitch**		7,500.00
RADIO				
DYNA-6				
365-AF011	Base	CD Player, Bluetooth, Radio with Antenna & . . . . . Speakers (MP3 Compatible)		**In Base**
365-AF009	7294249	Radio with Antenna & Speakers (MP3 Compatible). . .		(110.00)
365-AF001	7295157	Antenna and Speakers		(195.00)
DYNA-VT				
	5020425JM	CD Player, Bluetooth, Radio with Antenna & . . . . . Speakers (MP3 Compatible)		**In Base**
	5020428JM	Radio with Antenna and Speakers (MP3 Compatible) .		(110.00)
	5020424JM	Antenna and Speakers		(190.00)
CAB				
125-AE042	7293546	Superluxe Grammar Seat		1,792.00

(F.O.B. PORT OF ENTRY)

Order Code	Catalog Number	Description	Approx. Weight (lb.)	List Price
FRONT WEIGHTS				
285-YA000	Base	Front Weight Carrier		**In Base**
285-YA112	7293487	121 lbs. (55 kgs.) Front Weights, Set of 12 with Hardware - total Weight 1,455 lbs. (660 kgs.) Not compatible with Monoblock Weights (YB003 and YB004) or Front Hitch (F1150, F1151, or F1152)		2,295.00
REAR WHEEL WEIGHTS				
325-RD040	7294192	551 lbs. (250 kgs.) Weights, Set of 2 Mounts Externally to Wheel	1102	1,845.00
325-RD041	7294200	551 lbs. (250 kgs.) Weights, Set of 4 Mounts Externally to Wheel	2204	3,689.00
BELLY AND HITCH WEIGHTS				
245-YD001	7293374	1 Belly Weight - 584 lbs. (265 kgs.) (For use **WITHOUT** Front 3-Point Hitch)	584	1,490.00
345-YB003*	7294270	1,875 lbs (850 kg) Monoblock Weight		3,406.00
345-YB004*	7294271	3,307 lbs (1500 kg) Monoblock Weight		5,677.00
ELECTRICAL				
215-CB002	Base	Engine Block Heater - 110 Volt		**In Base**
215-CB000	7293593	Less Engine Block Heater		(204.00)
LIGHTING				
205-VF013	7293103	Dual Roof-Mounted Rotating Beacons, Left and Right (Includes SAE SMV sign)		522.00
195-VG078	7295103	2 Xenon and 2 Single Bulb Front Worklights, 2 Xenon Rear Worklights		3,392.00

***NOT COMPATIBLE WITH FRONT WEIGHTS**

(F.O.B. PORT OF ENTRY)

Order Code	Catalog Number	Description	Approx. Weight (lb.)	List Price
PIVOTING FRONT FENDERS				
155-WE110	Base	Pivoting Front Fenders - Standard Width . . . . . Width depends on tire selection; see Chart Below		**In Base**
155-WE111	7293598	Pivoting Front Fenders - Wide Width . . . . . Width depends on tire selection; see Chart Below		120.00

Fender Size		
Standard	**Wide**	**Tire Sizes**
12.6" (320 mm)	13.9" (355 mm)	320/85R34 (12.4R34) 320/85R38 (12.4R38)
14.9" (380 mm)	16.1" (410 mm)	380/85R30 (14.9R30) 380/85R34 (14.9R34) 400/80R28
16.1" (410 mm)	18.5" (470 mm)	420/85R28 (16.9R28) 420/85R30 (16.9R30) 420/90R30
18.5" (470 mm)	20.4" (520 mm)	480/70R30
20.4" (520 mm)	24.4" (620 mm)	540/65R28 540/65R30
24.4" (620 mm)	27.5" (700 mm)	600/65R28 710/55R30

REAR FENDERS			
255-WD012	Base	Rear Fenders without Extensions, 78.74"(2.00 M) . . .	**In Base**
255-WD017	7293107	Wide Fender -90.55" (2.3 M) with Rear Extension . . .	1,323.00
255-WD020	7293109	Extra Wide Fender -100.4" (2.55 M) . . . . . with Rear Extension	1,464.00

(F.O.B. PORT OF ENTRY)

Order Code	Catalog Number	Description	Approx. Weight (lb.)	List Price
MISCELLANEOUS				
35-EN001	7293092	Creeper Gear (4:1 Reduction). . . . . (**Available on Dyna-6 Editions Only)** (Not compatible with Loader Provision and/or Front Hitch)		2,366.00
250-GS001	7293100	Hydraulic Trailer Brakes		817.00
250-GS067	7293552	Pneumatic & Hydraulic		7,508.00
225-LQ001	7293553	Water Separator (Fuel Filter)		466.00
275-TC005	7294210	French Language OIB.		No Charge
275-TC011	7294211	Spanish Language OIB		No Charge
DEALER INSTALLED OPTIONS				
FRONT WEIGHTS				
BEAUVAIS BUILT				
	5020186M	8 x 55 kg (121 lbs.) Front Weights	968	1,545.00
	5020187M	10 x 55 kg (121 lbs.) Front Weights	1210	1,913.00
	5020188M	12 x 55 kg (121 lbs.) Front Weights	1452	2,295.00
	5020189M	14 x 55 kg (121 lbs.) Front Weights	1694	2,678.00
	5020190M	16 x 55 kg (121 lbs.) Front Weights	1936	3,060.00
JACKSON BUILT				
	5020186JM	8 x 55 kg (121 lbs.) Front Weights	968	1,545.00
	5020187JM	10 x 55 kg (121 lbs.) Front Weights	1210	1,913.00
	5020188JM	12 x 55 kg (121 lbs.) Front Weights	1452	2,295.00
	5020189JM	14 x 55 kg (121 lbs.) Front Weights	1694	2,678.00
	5020190JM	16 x 55 kg (121 lbs.) Front Weights	1936	3,060.00
REAR WEIGHT PACKAGE				
BEAUVAIS BUILT				
	5020202M	Additional Rear Wheel Weight Package - . . . . . set of 2 x 250kg (550 lbs) 250kg Weight Adapter for 10 Bolt Hub (order weights separately)		2,029.00
JACKSON BUILT				
	5020202JM	Additional Rear Wheel Weight Package - . . . . . set of 2 x 250kg (550 lbs) 250kg Weight Adapter for 10 Bolt Hub (order weights separately)		2,029.00

MASSEY FERGUSON®

MF8700 SERIES

Jackson Built
Possible Order Modifications in Weeks

	> 18	16 - 18	14 - 16	10 -14	6 - 10
Auto-Guide™ 3000	o	o	o	X	X
Front Axle/Rear Axle Type	o	0	X	X	X
Air Conditioning/Heater	o	o	X	X	X
Cab Audio	o	o	o	o	o
Front Fenders	o	o	o	o	o
Front Weights	o	o	o	o	o
Hydraulic/Pneumatic Trailer Brake	o	o	X	X	X
Hydraulic Remotes	o	o	o	X	X
Rear Fenders	o	o	o	X	X
Rear Linkage & PTO	o	o	X	X	X
Seat	o	o	o	X	X
Wheel & Tires	o	o	X	X	X
Working Lights & Mirrors	o	o	o	X	X

o = Components can be requested to be modified.

X = Components are frozen and cannot be modified.

*Dates subject to change without notice.

Guidelines for Availability and Order Changes

These charts list the possible change requests that can be made to the listed components through e-Ordering. The information provided is built off of the Scheduled Completion Date.

***Scheduled Completion Date; Not the Planned Available To Ship (PATS) Date**

Serial Number Reference For Determining Model Year Code

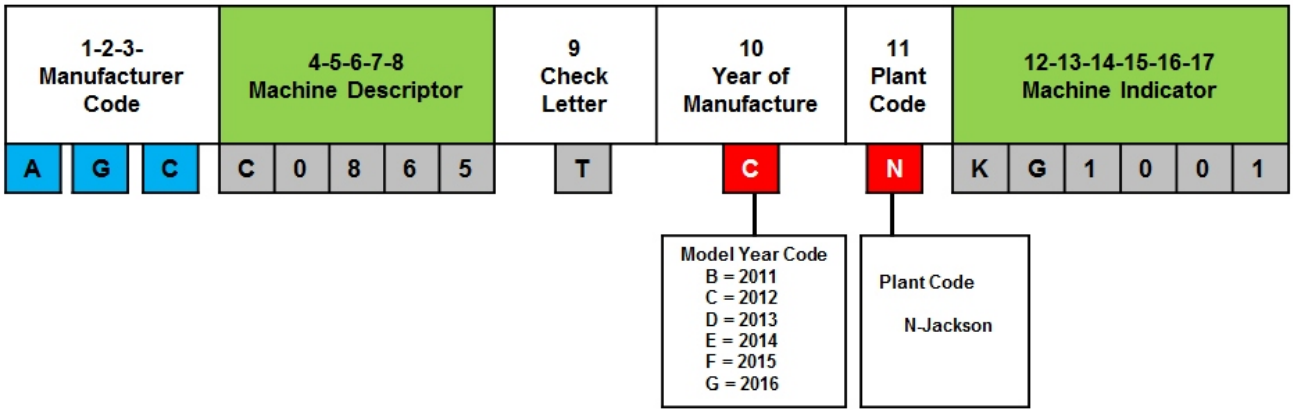

RESERVED

MF8700 SERIES

MASSEY FERGUSON®

STANDARD EQUIPMENT

F.O.B. JACKSON, MN

MODEL

MF8727: 270 Max Engine HP, 240 Rated Engine HP, 205 PTO HP
MF8730: 295 Max Engine HP, 265 Rated Engine HP, 225 PTO HP
MF8732: 320 Max Engine HP, 290 Rated Engine HP, 250 PTO HP
MF8735: 350 Max Engine HP, 320 Rated Engine HP, 275 PTO HP
MF8737: 370 Max Engine HP, 340 Rated Engine HP, 290 PTO HP

AP84-4: AGCO POWER™ 8.4L Tier 4F, 6 Cylinder Engine
Air-To-Air Aftercooled, Common Rail Injection, ⋆Twin Turbocharged
Electronic Engine Management (EEM4F) with Dual ERPM Settings
Suction Type Viscous Fan
Venturi-Type Engine Air Pre-Cleaner
Two-Stage Cassette-Type Engine Air Filter
Side Mounted Muffler with Integrated SCR Catalyst
(Mounted on Right Hand Corner of Cab)
Fuel Tank Capacity: 167 Gal (630L)
DEF Tank Capacity: 16 Gal (60L)
Two Fuel Filters
Automatic Starting Aid, Intake Grid Heater
CYCLAIR Cooling Package

POWERTRAIN

Dyna-VT Transmission 31 MPH (50 KPH), 60 ft/h (18.2 meter/hour)
Dynamic Tractor Management (DTM) with
Two Programmable Cruise Speeds
10” Multi-Disc Wet Brakes
- High Pressure Power Assisted
- Electro Hydraulic Park Brake (Park Lock)

Power Differential Lock
1000E/1000 RPM PTO, 1 ¾" 20 Spline Shaft
Rear Fender Mounted PTO Engage/Disengage
118" (2997mm) long, 4.33" (110mm) Diameter Rear Bar Axle

FRONT WHEEL ASSIST AXLE

Suspended Reinforced Power Front Axle (PFA)
Shielded Center Drive Line with Electro-Hydraulic Control
& Front Wheel Drive Differential Lock
55 Degree Steering Angle
SpeedSteer Quick Steering

HYDRAULICS

Closed Center 54 GPM (205L/Min) Pump
2900 PSI (200 Bar) Maximum Pressure
4 Electro-Hydraulic Valves, 2 Fingertip Controlled, 2 Joystick Controlled,
Flow And Timing Controlled Through Center Display Display (CCD)
Hydrostatic Power Steering

3-POINT HITCH & DRAWBAR

3-Point Hitch: with Category III/IVN Quick Hitch
Drawbar: Category III with Clevis and Drop Pin
Sway Block Stabilizers

ELECTRICAL SYSTEM

Two 12V, 120 amp Alternators
Two 12 Volt Batteries, 775 CCA each (SAE)
7-Pin Trailer Connector
Electrical Isolator Switch and Jumpstart Point
Solar Panel Trickle Charger on Cab Roof
Automatic Battery Shutoff (30 Minutes)
Two 3 Pin 12V Power Outlets
One 12V Single Pole Power Outlet
ISO 11783 9-Pin and ISO 11786 7-Pin in Cab Connector

LIGHTING

6 Front Hood Mounted Single Bulb Worklights
4 Headlights
4 Cab Mounted Single Bulb Front Worklights,
2 Cab Mounted Double Bulb Rear Worklights
Fold-Out Extremity Warning Lights
2 Roof Mounted Rotating Beacons

INSTRUMENTS

Control Center Display (CCD)
Video Input
Electric Valve Control
ISOBUS Compliant
Color & Digital Dash Display
SIS (Setup & Information Screen)
Tachometer: Digital and Analog
PTO Speed: Digital
Ground Speed Display: Digital
Fuel Level, DEF Level, and Coolant Temp Gauges
Warning/Information Lights

OPERATOR AREA

4-Post Panorama Cab
T-Handle Transmission Control on Armrest
OptiRide Plus Cab Suspension
Adjustable Steering Column
Front Sun Visor
Air Conditioning and Heater - Manual
Superluxe Grammar Seat - Air Suspended, Heated Seat
Front And Rear Windshield Wiper/Washer
Dual Large Telescoping Electric Adjustable Side Mirrors
with Electric De-icing
Single Inside Rear View Mirror
4 Audio Speakers
AM/FM, Bluetooth, Radio with CD Player, Antenna & Speakers
(MP3 Compatible)
(Requires Extra Microphone for Bluetooth Mobile Phone Calls.)
Magnetic Ashtray
Control Panel & 3-Point Hitch Controls on Right Hand Pillar

WHEELS AND TIRES

MF8727 / MF8730
Rear 480/80R46 R1W Dual Wheels, Cast Inner/Steel Outer
Front 420/90R30 R1W Single Waffle Wheels
MF8732 / MF8735 / MF8737
Rear 480/80R50 R1W Dual Wheels, Cast Inner/Steel Outer
Front 420/85R34 R1W Single Waffle Wheels

OTHER STANDARD FEATURES

Auto-Guide™ 3000, Auto Steering System using the
Tractor Management Center Display (TMC)
AGCOMMAND™ Equipped with Antenna, Bracket, Harness
and Module. Includes: AGCOMMAND™ Advanced
(1 Year Subscription, Must be activated within 12 months of
warranty registration)
Lockable Tool Box
SMV & SIS Sign
Molded Rear Fenders 2.10m
Integrated Belly Weight with Front Weight Carrier
Fender Mounted External Lift Control on Both Sides with External
Spool Valve Control
English Literature

MASSEY FERGUSON®

Order Code	Catalog Number	Description	Approx. Weight (lb.)	List Price
BASE MACHINE				
MF8727	7294620	Massey Ferguson 8727 - 205 PTO HP 4WD Tractor		283,017.00
MF8730	7294621	Massey Ferguson 8730 - 225 PTO HP 4WD Tractor		298,867.00
MF8732	7294622	Massey Ferguson 8732 - 250 PTO HP 4WD Tractor		320,755.00
MF8735	7294623	Massey Ferguson 8735 - 275 PTO HP 4WD Tractor		342,716.00
MF8737	7294624	Massey Ferguson 8737 - 290 PTO HP 4WD Tractor		352,930.00
PACKAGES				
315-MPP8004	7294275	Performance Bundle Includes: YM243 Category III Heavy Duty Drawbar & Clevis MU051 3rd, 4th, 5th, & 6th Electric, Fingertip Controlled Valves LA036 540E/1000 RPM Flanged PTO, 6, 20 & 21 spline CB002 Engine Block Heater LQ001 Water Separator (Fuel Filter)		5,092.00
315-MPP8005	7294276	Performance Bundle Includes: YM243 Category III Heavy Duty Drawbar & Clevis MU051 3rd, 4th, 5th, & 6th Electric, Fingertip Controlled Valves LA105 1000E/1000 RPM Flanged PTO, 20 & 21 spline CB002 Engine Block Heater LQ001 Water Separator (Fuel Filter)		5,092.00
320-MLP8003	7294277	Luxury Bundle Includes: AQ004 Automatic Climate Control VG078 NightBlaze (Xenon) Cab Worklights - 2 Front & 2 Rear AE065 Maximo Evolution Grammar Seat		7,233.00
TRANSMISSION*				
25-EA622	Base	Dyna-VT Transmission- 31 mph (50 KPH) with Heavy Duty Suspended Front Axle		**In Base**
25-A7035	7294255	Dyna-VT Transmission - 25 mph (40 KPH) with Heavy Duty Fixed Front Axle		(15,625.00)
TRANSMISSION CONTROL				
30-EC008	Base	"T" Lever Control on Armrest		**In Base**
30-EC022	7294256	MultiPad Joystick		1,956.00
CAB SUSPENSION				
115-AM045	Base	OptiRide Plus Suspension		**In Base**
115-AM015	7294244	No Cab Suspension		(5,066.00)
CAB SEAT				
125-AE042	Base	Superluxe Grammar Seat		**In Base**
125-AE065	7294261	Maximo Evolution Grammar Seat		2,922.00
125-AE087	7294278	Maximo Evolution Premium Leather Package, Includes: Leather Operator Seat Leather Instructor Seat Leather Wrapped Steering Wheel		3,950.00

***Heavy Duty Fixed / Suspended Front Axles are not compatible with 28" and 30" Waffle Rims with 60" and 64" tread settings when ordering Pivoting Front Fenders.**

Order Code	Catalog Number	Description	Approx. Weight (lb.)	List Price
INSTRUMENT PANEL / CONTROL CENTER DISPLAY (CCD)				
	5020419JM	Control Center Display (CCD) with Radar, Video Input & ISOBUS, Auto-Guide™ 3000 Sub-Meter (WAAS and OmniStar VBS) Auto Steering System- **English Language**. Auto-Guide™ 3000 uses the Control Center Display (CCD).		**In Base**
	5020420JM	Control Center Display (CCD) with Radar, Video Input & ISOBUS, Auto-Guide™ 3000 Sub-Meter (WAAS and OmniStar VBS) Auto Steering System- **French Language**. Auto-Guide™ 3000 uses the Control Center Display (CCD).		No Charge
	5020421JM	Control Center Display (CCD) with Radar, Video Input, . . . ISOBUS, and Auto Steering Ready. (Includes Roof Plate and Wiring Harness)		(4,828.00)
AUXILIARY VALES 1 & 2				
50-KX012	Base	Valves 1 and 2 Electric, with Multi-Function Joystick on the Armrest		**In Base**
AUXILIARY VALVE 3, 4, 5 & 6				
55-MU031	Base	3rd and 4th Electric, Fingertip Controlled Valves . . . . . with Fingertips located on Right Hand Console		**In Base**
55-MU051	7294258	3rd, 4th, 5th, & 6th Electric, Fingertip Controlled Valves . . with Fingertips located on Right Hand Console		3,701.00
PTO- WITH IN CAB CONTROL				
100-LA104	Base	1000E/1000 RPM Flanged PTO, 20 Spline Shaft Included.		**In Base**
100-LA098	7294213	540E/1000 RPM Flanged PTO, 20 Spline Shaft Included. .		No Charge
100-LA105*	7294214	1000E/1000 RPM Flanged PTO, ... 20 & 21 Spline Shaft Included		284.00
100-LA036*	7294215	540E/1000 RPM Flanged PTO, ... 6, 20 & 21 Spline Shaft Included		284.00

***(Not offered with Factory Installed Cat 4 Drawbar. Order additional shafts from Parts)**

MASSEY FERGUSON®

Order Code	Catalog Number	Description	Approx. Weight (lb.)	List Price

TIRES FOR MF 8727

TIRE BRAND SELECTION- REQUIRED

70-Blank	7294212	Factory Brand Choice	No Charge
70-T0001	7294195	Michelin Brand Required	1,615.00
70-T0002	7294196	Goodyear Brand Required	1,193.00
70-T0007	7294197	Firestone Brand Required	1,193.00
70-T0010	7294198	Trelleborg Brand Required	1,193.00

Note: Tire brand subject to change without notice unless a Brand is specified in Segment 70 Tire Brand Availability is listed after each tire size.

FRONT AND REAR TIRES - REQUIRED*

***11 weeks out for changes on Jackson Built Models**

Rear: Single Steel Welded Wheel
Front: Welded Wheel

75-W1583	7294856B1	Rear:	650/85R38 R1W (MI, TR)	
	7294796B1	Front:	600/70R28 R1W (MI, TR)	(5,158.00)
75-W1585	7294857B1	Rear:	710/70R38 R1W (MI, GY, FI, TR)	
	7294795B1	Front:	600/65R28 R1W (MI, GY, FI, TR)	(4,774.00)
75-W1587	7294859B1	Rear:	710/70R42 R1W (MI, GY, TR)	
	7294796B1	Front:	600/70R28 R1W (MI, GY, TR)	(415.00)

Rear: Single Steel Welded Wheel
Front: Waffle Wheel

75-W1525	7294859B1	Rear:	710/70R42 R1W (MI, GY, FI, TR)	
	7294756B1	Front:	480/70R34 R1W (MI, GY, FI, TR)	(1,549.00)

TIRES FOR MF 8727

FRONT AND REAR TIRES - REQUIRED - (CONTINUED)

Rear: Dual Row Crop Single Cast
Front: Waffle Wheel

Order Code	Catalog Number	Description	Approx. Weight (lb.)	List Price
75-Base	7294864B1	Duals: 480/80R46 R1W (MI, FI)		
	7294750B1	Front: 420/90R30 R1W (MI, FI		**In Base**
75-W1391	7294863B1	Duals: 520/85R42 R1W (MI, GY, FI)		
	7294750B1	Front: 420/90R30 R1W (MI, GY, FI)		552.00
75-W1744	7294869B1	Duals: 380/90R54 R1W (GY, FI, TR)		
	7294758B1	Front: 380/80R38 R1W (GY, FI, TR)		1,494.00
75-W1526	7294867B1	Duals: 480/80R50 R1W (MI, GY, FI, TR)		
	7294755B1	Front: 420/85R34 R1W (MI, GY, FI, TR)		1,684.00
75-W1598	7294867B1	Duals: 480/80R50 R1W (MI, GY, FI, TR)		
	7294756B1	Front: 480/70R34 R1W (MI, GY, FI, TR)		2,882.00
75-W1722	7294867B1	Duals: 480/80R50 R1W (MI, GY, FI, TR)		
	7294758B1	Front: 380/80R38 R1W (MI, GY, FI, TR)		2,594.00
75-W1597	7294865B1	Duals: 520/85R46 R1W (MI, GY, FI, TR)		
	7294755B1	Front: 420/85R34 R1W (MI, GY, FI, TR)		2,174.00
75-W1418	7294865B1	Duals: 520/85R46 R1W (MI, GY, FI, TR)		
	7294756B1	Front: 480/70R34 R1W (MI, GY, FI, TR)		3,372.00
75-W1721	7294865B1	Duals: 520/85R46 R1W (MI, GY, FI, TR)		
	7294758B1	Front: 380/80R38 R1W (MI, GY, FI, TR)		3,084.00
75-W1404	7294868B1	Duals: 320/90R54 R1W (MI, GY, FI)		
	7294757B1	Front: 320/85R38 R1W (MI, GY, FI)		386.00
75-W1864	7294919B1	Duals: VF480/80R46 R1W (MI)		
	7294917B1	Front: VF380/85R34 R1W (MI)		4,692.00
75-W1865	7294920B1	Duals: VF480/80R50 R1W (MI)		
	7294918B1	Front: VF420/85R34 R1W (MI)		5,612.00
75-W1865	7294923B1	Duals: IF480/80R50 R1W (FI)		
	7294922B1	Front: IF420/85R34 R1W (FI)		5,356.00
*75-W1401	7294864B1	Duals: 480/80R46 R1W (MI, GY, FI, TR)		
	7294754B1	Front: 380/85R34 R1W (MI, GY, FI, TR)		(247.00)
*75-W1399	7294863B1	Duals: 520/85R42 R1W (MI, GY, FI, TR)		
	7294754B1	Front: 380/85R34 R1W (MI, GY, FI, TR)		305.00
*75-W1596	7294863B1	Duals: 520/85R42 R1W (MI, GY, TR)		
	7294749B1	Front: 420/85R30 R1W (MI, GY, TR)		516.00

***Requires Dealer Installed Front Duals ordered from Loose Accessories**

Rear: Dual Row Crop Single Cast
Front: Welded Steel

75-W1733	7294867B1	Duals: 480/80R50 R1W (MI, GY, TR)		
	7294796B1	Front: 600/70R28 R1W (MI, GY, TR)		4,016.00
75-W1746	7294865B1	Duals: 520/85R46 R1W (MI, GY, TR)		
	7294796B1	Front: 600/70R28 R1W (MI, GY, TR)		4,506.00

Field Installed Spacer Kit - Rear Wheels

	72517687JM	Dual Wheel Spacer Kit - 240mm		2,593.00

MASSEY FERGUSON®

TIRES FOR MF 8730

TIRE BRAND SELECTION- REQUIRED

Order Code	Catalog Number	Description	Approx. Weight (lb.)	List Price
70-Blank	7294212	Factory Brand Choice		No Charge
70-T0001	7294195	Michelin Brand Required		1,615.00
70-T0002	7294196	Goodyear Brand Required		1,193.00
70-T0007	7294197	Firestone Brand Required		1,193.00
70-T0010	7294198	Trelleborg Brand Required		1,193.00

Note: Tire brand subject to change without notice unless a Brand is specified in Segment 70.
Tire Brand Availability is listed after each tire size.

FRONT AND REAR TIRES - REQUIRED*

***11 weeks out for changes on Jackson Built Models**

Rear: Single Steel Welded Wheel
Front: Welded Wheel

75-W1583	7294856B1	Rear:	650/85R38 R1W (MI, TR)	
	7294796B1	Front:	600/70R28 R1W (MI, TR)	(5,158.00)
75-W1585	7294857B1	Rear:	710/70R38 R1W (MI, GY, FI, TR)	
	7294795B1	Front:	600/65R28 R1W (MI, GY, FI, TR)	(4,774.00)
75-W1587	7294859B1	Rear:	710/70R42 R1W (MI, GY, TR)	
	7294796B1	Front:	600/70R28 R1W (MI, GY, TR)	(415.00)
75-W1561	7294878B1	Rear:	710/75R42 R1W (TR)	
	7294799B1	Front:	600/65R34 R1W (TR)	2,602.00
75-W1739	7294878B1	Rear:	710/75R42 R1W (TR)	
	7294914B1	Front:	650/60R34 R1W (TR)	2,924.00
75-W1714	7294881B1	Rear:	900/60R42 R1W (TR)	
	7294799B1	Front:	600/65R34 R1W (TR)	7,012.00
75-W1743	7294881B1	Rear:	900/60R42 R1W (TR)	
	7294914B1	Front:	650/60R34 R1W (TR)	7,334.00

Rear: Single Steel Welded Wheel
Front: Waffle Wheel

75-W1525	7294859B1	Rear:	710/70R42 R1W (MI, GY, FI, TR)	
	7294756B1	Front:	480/70R34 R1W (MI, GY, FI, TR)	(1,549.00)

TIRES FOR MF 8730

FRONT AND REAR TIRES - REQUIRED - (CONTINUED)

Rear: Dual Row Crop Single Cast
Front: Waffle Wheel

Order Code	Catalog Number	Description	Approx. Weight (lb.)	List Price
75-Base	7294864B1	Duals: 480/80R46 R1W (MI, FI)		
	7294750B1	Front: 420/90R30 R1W (MI, FI		**In Base**
75-W1391	7294863B1	Duals: 520/85R42 R1W (MI, GY, FI)		
	7294750B1	Front: 420/90R30 R1W (MI, GY, FI)		552.00
75-W1744	7294869B1	Duals: 380/90R54 R1W (GY, FI, TR)		
	7294758B1	Front: 380/80R38 R1W (GY, FI, TR)		1,494.00
75-W1526	7294867B1	Duals: 480/80R50 R1W (MI, GY, FI, TR)		
	7294755B1	Front: 420/85R34 R1W (MI, GY, FI, TR)		1,684.00
75-W1598	7294867B1	Duals: 480/80R50 R1W (MI, GY, FI, TR)		
	7294756B1	Front: 480/70R34 R1W (MI, GY, FI, TR)		2,882.00
75-W1722	7294867B1	Duals: 480/80R50 R1W (MI, GY, FI, TR)		
	7294758B1	Front: 380/80R38 R1W (MI, GY, FI, TR)		2,594.00
75-W1597	7294865B1	Duals: 520/85R46 R1W (MI, GY, FI, TR)		
	7294755B1	Front: 420/85R34 R1W (MI, GY, FI, TR)		2,174.00
75-W1418	7294865B1	Duals: 520/85R46 R1W (MI, GY, FI, TR)		
	7294756B1	Front: 480/70R34 R1W (MI, GY, FI, TR)		3,372.00
75-W1721	7294865B1	Duals: 520/85R46 R1W (MI, GY, FI, TR)		
	7294758B1	Front: 380/80R38 R1W (MI, GY, FI, TR)		3,084.00
75-W1404	7294868B1	Duals: 320/90R54 R1W (MI, GY, FI)		
	7294757B1	Front: 320/85R38 R1W (MI, GY, FI)		386.00
75-W1864	7294919B1	Duals: VF480/80R46 R1W (MI)		
	7294917B1	Front: VF380/85R34 R1W (MI)		4,692.00
75-W1865	7294920B1	Duals: VF480/80R50 R1W (MI)		
	7294918B1	Front: VF420/85R34 R1W (MI)		5,612.00
75-W1865	7294923B1	Duals: IF480/80R50 R1W (FI)		
	7294922B1	Front: IF420/85R34 R1W (FI)		5,356.00
*75-W1401	7294864B1	Duals: 480/80R46 R1W (MI, GY, FI, TR)		
	7294754B1	Front: 380/85R34 R1W (MI, GY, FI, TR)		(247.00)
*75-W1399	7294863B1	Duals: 520/85R42 R1W (MI, GY, FI, TR)		
	7294754B1	Front: 380/85R34 R1W (MI, GY, FI, TR)		305.00
*75-W1596	7294863B1	Duals: 520/85R42 R1W (MI, GY, TR)		
	7294749B1	Front: 420/85R30 R1W (MI, GY, TR)		516.00

***Requires Dealer Installed Front Duals ordered from Loose Accessories**

Rear: Dual Row Crop Single Cast
Front: Welded Steel

75-W1733	7294867B1	Duals: 480/80R50 R1W (MI, GY, TR)		
	7294796B1	Front: 600/70R28 R1W (MI, GY, TR)		4,016.00
75-W1746	7294865B1	Duals: 520/85R46 R1W (MI, GY, TR)		
	7294796B1	Front: 600/70R28 R1W (MI, GY, TR)		4,506.00

Field Installed Spacer Kit - Rear Wheels

	72517687JM	Dual Wheel Spacer Kit - 240mm		2,593.00

MASSEY FERGUSON®

Order Code	Catalog Number	Description	Approx. Weight (lb.)	List Price

TIRES FOR MF 8732

TIRE BRAND SELECTION- REQUIRED

70-Blank	7294212	Factory Brand Choice	No Charge
70-T0001	7294195	Michelin Brand Required	1,615.00
70-T0002	7294196	Goodyear Brand Required	1,193.00
70-T0007	7294197	Firestone Brand Required	1,193.00
70-T0010	7294198	Trelleborg Brand Required	1,193.00

Note: Tire brand subject to change without notice unless a Brand is specified in Segment 70.
Tire Brand Availability is listed after each tire size.

FRONT AND REAR TIRES - REQUIRED*

***11 weeks out for changes on Jackson Built Models**

Rear: Single Steel Welded Wheel
Front: Welded Wheel

75-W1583	7294856	Rear:	650/85R38 R1W (MI, TR)	
	7294796	Front:	600/70R28 R1W (MI, TR)	(8,821.00)
75-W1585	7294857	Rear:	710/70R38 R1W (MI, GY, FI, TR)	
	7294795	Front:	600/65R28 R1W (MI, GY, FI, TR)	(6,439.00)
75-W1587	7294859	Rear:	710/70R42 R1W (MI, GY, TR)	
	7294796	Front:	600/70R28 R1W (MI, GY, TR)	(2,082.00)
75-W1561	7294878	Rear:	710/75R42 R1W (TR)	
	7294799	Front:	600/65R34 R1W (TR)	935.00
75-W1739	7294878	Rear:	710/75R42 R1W (TR)	
	7294914	Front:	650/60R34 R1W (TR)	1,257.00
75-W1714	7294881	Rear:	900/60R42 R1W (TR)	
	7294799	Front:	600/65R34 R1W (TR)	5,328.00
75-W1743	7294881	Rear:	900/60R42 R1W (TR)	
	7294914	Front:	650/60R34 R1W (TR)	5,650.00

Rear: Single Steel Welded Wheel
Front: Waffle Wheel

75-W1525	7294859	Rear:	710/70R42 R1W (MI, GY, FI, TR)	
	7294756	Front:	480/70R34 R1W (MI, GY, FI, TR)	(3,216.00)

TIRES FOR MF 8732

FRONT AND REAR TIRES - REQUIRED - (CONTINUED)

Rear: Dual Row Crop Single Cast
Front: Waffle Wheel

Order Code	Catalog Number	Description	Approx. Weight (lb.)	List Price
75-Base	7294867	Duals: 480/80R50 R1W (MI, GY, FI, TR)		
	7294755	Front: 420/85R34 R1W (MI, GY, FI, TR)		**In Base**
75-W1414	7294864	Duals: 480/80R46 R1W (MI, GY, FI)		
	7294750	Front: 420/90R30 R1W (MI, GY, FI)		(1,635.00)
75-W1391	7294863	Duals: 520/85R42 R1W (MI, GY, FI)		
	7294750	Front: 420/90R30 R1W (MI, GY, FI)		(1,099.00)
75-W1744	7294869	Duals: 380/90R54 R1W (GY, FI, TR)		
	7294758	Front: 380/80R38 R1W (GY, FI, TR)		(172.00)
75-W1598	7294867	Duals: 480/80R50 R1W (MI, GY, FI, TR)		
	7294756	Front: 480/70R34 R1W (MI, GY, FI, TR)		1,198.00
75-W1722	7294867	Duals: 480/80R50 R1W (MI, GY, FI, TR)		
	7294758	Front: 380/80R38 R1W (MI, GY, FI, TR)		911.00
75-W1597	7294865	Duals: 520/85R46 R1W (MI, GY, FI, TR)		
	7294755	Front: 420/85R34 R1W (MI, GY, FI, TR)		489.00
75-W1418	7294865	Duals: 520/85R46 R1W (MI, GY, FI, TR)		
	7294756	Front: 480/70R34 R1W (MI, GY, FI, TR)		1,687.00
75-W1721	7294865	Duals: 520/85R46 R1W (MI, GY, FI, TR)		
	7294758	Front: 380/80R38 R1W (MI, GY, FI, TR)		1,400.00
75-W1404	7294868	Duals: 320/90R54 R1W (MI, GY, FI)		
	7294757	Front: 320/85R38 R1W (MI, GY, FI)		(1,282.00)
75-W1864	7294919	Duals: VF480/80R46 R1W (MI)		
	7294917	Front: VF380/85R34 R1W (MI)		3,044.00
75-W1865	7294920	Duals: VF480/80R50 R1W (MI)		
	7294918	Front: VF420/85R34 R1W (MI)		3,961.00
75-W1865	7294923	Duals: IF480/80R50 R1W (FI)		
	7294922	Front: IF420/85R34 R1W (FI)		3,708.00
*75-W1401	7294864	Duals: 480/80R46 R1W (MI, GY, FI, TR)		
	7294754	Front: 380/85R34 R1W (MI, GY, FI, TR)		(1,882.00)
*75-W1399	7294863	Duals: 520/85R42 R1W (MI, GY, FI, TR)		
	7294754	Front: 380/85R34 R1W (MI, GY, FI, TR)		(1,346.00)
*75-W1596	7294863	Duals: 520/85R42 R1W (MI, GY, TR)		
	7294749	Front: 420/85R30 R1W (MI, GY, TR)		(476.00)

***Requires Dealer Installed Front Duals ordered from Loose Accessories**

Rear: Dual Row Crop Single Cast
Front: Welded Steel

75-W1733	7294867	Duals: 480/80R50 R1W (MI, GY, TR)		
	7294796	Front: 600/70R28 R1W (MI, GY, TR)		2,332.00
75-W1746	7294865	Duals: 520/85R46 R1W (MI, GY, TR)		
	7294796	Front: 600/70R28 R1W (MI, GY, TR)		2,821.00

Field Installed Spacer Kit - Rear Wheels

	72517687JM	Dual Wheel Spacer Kit - 240mm		2,593.00

MASSEY FERGUSON®

TIRES FOR MF 8735

TIRE BRAND SELECTION- REQUIRED

Order Code	Catalog Number	Description	Approx. Weight (lb.)	List Price
70-Blank	7294212	Factory Brand Choice		No Charge
70-T0001	7294195	Michelin Brand Required		1,615.00
70-T0002	7294196	Goodyear Brand Required		1,193.00
70-T0007	7294197	Firestone Brand Required		1,193.00
70-T0010	7294198	Trelleborg Brand Required		1,193.00

Note: Tire brand subject to change without notice unless a Brand is specified in Segment 70.
Tire Brand Availability is listed after each tire size.

FRONT AND REAR TIRES - REQUIRED*

***11 weeks out for changes on Jackson Built Models**

Rear: Single Steel Welded Wheel
Front: Welded Wheel

75-W1583	7294856	Rear:	650/85R38 R1W (MI, TR)	
	7294796	Front:	600/70R28 R1W (MI, TR)	(8,821.00)
75-W1585	7294857	Rear:	710/70R38 R1W (MI, GY, FI, TR)	
	7294795	Front:	600/65R28 R1W (MI, GY, FI, TR)	(6,439.00)
75-W1587	7294859	Rear:	710/70R42 R1W (MI, GY, TR)	
	7294796	Front:	600/70R28 R1W (MI, GY, TR)	(2,082.00)
75-W1561	7294878	Rear:	710/75R42 R1W (TR)	
	7294799	Front:	600/65R34 R1W (TR)	935.00
75-W1739	7294878	Rear:	710/75R42 R1W (TR)	
	7294914	Front:	650/60R34 R1W (TR)	1,257.00
75-W1714	7294881	Rear:	900/60R42 R1W (TR)	
	7294799	Front:	600/65R34 R1W (TR)	5,328.00
75-W1743	7294881	Rear:	900/60R42 R1W (TR)	
	7294914	Front:	650/60R34 R1W (TR)	5,650.00

Rear: Single Steel Welded Wheel
Front: Waffle Wheel

75-W1525	7294859	Rear:	710/70R42 R1W (MI, GY, FI, TR)	
	7294756	Front:	480/70R34 R1W (MI, GY, FI, TR)	(3,216.00)

TIRES FOR MF 8735

FRONT AND REAR TIRES - REQUIRED - (CONTINUED)

Rear: Dual Row Crop Single Cast
Front: Waffle Wheel

Order Code	Catalog Number	Description	Approx. Weight (lb.)	List Price
75-Base	7294867	Duals: 480/80R50 R1W (MI, GY, FI, TR)		
	7294755	Front: 420/85R34 R1W (MI, GY, FI, TR)		**In Base**
75-W1414	7294864	Duals: 480/80R46 R1W (MI, GY, FI)		
	7294750	Front: 420/90R30 R1W (MI, GY, FI)		(1,635.00)
75-W1391	7294863	Duals: 520/85R42 R1W (MI, GY, FI)		
	7294750	Front: 420/90R30 R1W (MI, GY, FI)		(1,099.00)
75-W1744	7294869	Duals: 380/90R54 R1W (GY, FI, TR)		
	7294758	Front: 380/80R38 R1W (GY, FI, TR)		(172.00)
75-W1598	7294867	Duals: 480/80R50 R1W (MI, GY, FI, TR)		
	7294756	Front: 480/70R34 R1W (MI, GY, FI, TR)		1,198.00
75-W1722	7294867	Duals: 480/80R50 R1W (MI, GY, FI, TR)		
	7294758	Front: 380/80R38 R1W (MI, GY, FI, TR)		911.00
75-W1597	7294865	Duals: 520/85R46 R1W (MI, GY, FI, TR)		
	7294755	Front: 420/85R34 R1W (MI, GY, FI, TR)		489.00
75-W1418	7294865	Duals: 520/85R46 R1W (MI, GY, FI, TR)		
	7294756	Front: 480/70R34 R1W (MI, GY, FI, TR)		1,687.00
75-W1721	7294865	Duals: 520/85R46 R1W (MI, GY, FI, TR)		
	7294758	Front: 380/80R38 R1W (MI, GY, FI, TR)		1,400.00
75-W1864	7294919	Duals: VF480/80R46 R1W (MI)		
	7294917	Front: VF380/85R34 R1W (MI)		3,044.00
75-W1865	7294920	Duals: VF480/80R50 R1W (MI)		
	7294918	Front: VF420/85R34 R1W (MI)		3,961.00
75-W1865	7294923	Duals: IF480/80R50 R1W (FI)		
	7294922	Front: IF420/85R34 R1W (FI)		3,708.00

Rear: Dual Row Crop Single Cast
Front: Welded Steel

75-W1733	7294867	Duals: 480/80R50 R1W (MI, GY, TR)		
	7294796	Front: 600/70R28 R1W (MI, GY, TR)		2,332.00
75-W1746	7294865	Duals: 520/85R46 R1W (MI, GY, TR)		
	7294796	Front: 600/70R28 R1W (MI, GY, TR)		2,821.00

Field Installed Spacer Kit - Rear Wheels

	72517687JM	Dual Wheel Spacer Kit - 240mm		2,593.00

MASSEY FERGUSON®

TIRES FOR MF 8737

TIRE BRAND SELECTION- REQUIRED

Order Code	Catalog Number	Description	Approx. Weight (lb.)	List Price
70-Blank	7294212	Factory Brand Choice		No Charge
70-T0001	7294195	Michelin Brand Required		1,615.00
70-T0002	7294196	Goodyear Brand Required		1,193.00
70-T0007	7294197	Firestone Brand Required		1,193.00
70-T0010	7294198	Trelleborg Brand Required		1,193.00

Note: Tire brand subject to change without notice unless a Brand is specified in Segment 70.
Tire Brand Availability is listed after each tire size.

FRONT AND REAR TIRES - REQUIRED*

***11 weeks out for changes on Jackson Built Models**

Rear: Single Steel Welded Wheel
Front: Welded Wheel

75-W1583	7294856	Rear:	650/85R38 R1W (MI, TR)	
	7294796	Front:	600/70R28 R1W (MI, TR)	(8,821.00)
75-W1587	7294859	Rear:	710/70R42 R1W (MI, GY, TR)	
	7294796	Front:	600/70R28 R1W (MI, GY, TR)	(2,082.00)
75-W1561	7294878	Rear:	710/75R42 R1W (TR)	
	7294799	Front:	600/65R34 R1W (TR)	935.00
75-W1739	7294878	Rear:	710/75R42 R1W (TR)	
	7294914	Front:	650/60R34 R1W (TR)	1,257.00
75-W1714	7294881	Rear:	900/60R42 R1W (TR)	
	7294799	Front:	600/65R34 R1W (TR)	5,328.00
75-W1743	7294881	Rear:	900/60R42 R1W (TR)	
	7294914	Front:	650/60R34 R1W (TR)	5,650.00

Rear: Single Steel Welded Wheel
Front: Waffle Wheel

75-W1525	7294859	Rear:	710/70R42 R1W (MI, GY, FI, TR)	
	7294756	Front:	480/70R34 R1W (MI, GY, FI, TR)	(3,216.00)

TIRES FOR MF 8737

FRONT AND REAR TIRES - REQUIRED - (CONTINUED)

Rear: Dual Row Crop Single Cast
Front: Waffle Wheel

Order Code	Catalog Number	Description	Approx. Weight (lb.)	List Price
75-Base	7294867	Duals: 480/80R50 R1W (MI, GY, FI, TR)		
	7294755	Front: 420/85R34 R1W (MI, GY, FI, TR)		**In Base**
75-W1414	7294864	Duals: 480/80R46 R1W (MI, GY, FI)		
	7294750	Front: 420/90R30 R1W (MI, GY, FI)		(1,635.00)
75-W1391	7294863	Duals: 520/85R42 R1W (MI, GY, FI)		
	7294750	Front: 420/90R30 R1W (MI, GY, FI)		(1,099.00)
75-W1744	7294869	Duals: 380/90R54 R1W (GY, FI, TR)		
	7294758	Front: 380/80R38 R1W (GY, FI, TR)		(172.00)
75-W1598	7294867	Duals: 480/80R50 R1W (MI, GY, FI, TR)		
	7294756	Front: 480/70R34 R1W (MI, GY, FI, TR)		1,198.00
75-W1722	7294867	Duals: 480/80R50 R1W (MI, GY, FI, TR)		
	7294758	Front: 380/80R38 R1W (MI, GY, FI, TR)		911.00
75-W1597	7294865	Duals: 520/85R46 R1W (MI, GY, FI, TR)		
	7294755	Front: 420/85R34 R1W (MI, GY, FI, TR)		489.00
75-W1418	7294865	Duals: 520/85R46 R1W (MI, GY, FI, TR)		
	7294756	Front: 480/70R34 R1W (MI, GY, FI, TR)		1,687.00
75-W1721	7294865	Duals: 520/85R46 R1W (MI, GY, FI, TR)		
	7294758	Front: 380/80R38 R1W (MI, GY, FI, TR)		1,400.00
75-W1864	7294919	Duals: VF480/80R46 R1W (MI)		
	7294917	Front: VF380/85R34 R1W (MI)		3,044.00
75-W1865	7294920	Duals: VF480/80R50 R1W (MI)		
	7294918	Front: VF420/85R34 R1W (MI)		3,961.00
75-W1865	7294923	Duals: IF480/80R50 R1W (FI)		
	7294922	Front: IF420/85R34 R1W (FI)		3,708.00

Rear: Dual Row Crop Single Cast
Front: Welded Steel

75-W1733	7294867	Duals: 480/80R50 R1W (MI, GY, TR)		
	7294796	Front: 600/70R28 R1W (MI, GY, TR)		2,332.00
75-W1746	7294865	Duals: 520/85R46 R1W (MI, GY, TR)		
	7294796	Front: 600/70R28 R1W (MI, GY, TR)		2,821.00

Field Installed Spacer Kit - Rear Wheels

	72517687JM	Dual Wheel Spacer Kit - 240mm		2,593.00

Order Code	Catalog Number	Description	Approx. Weight (lb.)	List Price
FACTORY INSTALLED OPTIONS				
OPERATORS AREA				
120-AQ004	7294167	Automatic Climate Control		1,104.00
ELECTRICAL				
195-VG078	7295103	NightBlaze (Xenon) Cab Worklights -2 Front & 2 Rear		3,392.00
PIVOTING ADJUSTABLE FRONT FENDERS				
155-WE110	7294204*	Standard Pivoting Front Fenders		1,699.00
155-WE111	7294205*	Wide Pivoting Front Fenders		2,004.00

***Heavy Duty Fixed / Suspended Front Axles are not compatible with 28" and 30" Waffle Rims with 60" and 64" tread settings when ordering Pivoting Front Fenders.**

INTEGRATED FRONT LINKAGE SYSTEM (IFLS)			
230-FA000	Base	Integrated Belly Weight, Front Weight Carrier, Less Front Hitch	**In Base**
230-F1136	7294262	5000 kg. (11,023 lbs.) Front Linkage, Two Sets of Hydraulic Couplers and Free Return Coupler	10,149.00
230-F1137	7294263	5000 kg. (11,023 lbs.) Front Linkage, Two Sets of Hydraulic Couplers and Free Return Coupler with 345kg Front Belly Weight	12,088.00
230-F1313	7294264	5000 kg. (11,023 lbs.) Front Linkage, Two Sets of Hydraulic Couplers and Free Return Coupler with Front PTO Anti-Clockwise rotation and 21 spline shaft (1000 rpm)	18,666.00
THREE POINT HITCH			
85-GC210*	Base	Category III Fixed Top & Lower Links with Category III/IVN Quick Hitch	**In Base**
85-GC209	7294146	Category III Fixed Top and Lower Links	(1,544.00)

***Quick Hitch should be removed if using the 6 or 21 spline PTO shaft so that proper PTO to Hitch position is maintained. Not Compatible with Rear Fender Extensions (2M10 & 2M55 Fenders).**

DRAWBAR			
95-YM242	Base	Category III Drawbar & Clevis	**In Base**
95-YM243	7294257	Category III Heavy Duty Drawbar & Clevis	626.00
95-YM246*	7294136	Category IV Drawbar & Clevis	920.00

***Category IV Drawbar only offered with 20 Spline PTO Shaft Option from the factory.**
Drawbar position for 6 & 21 spline shafts are not achievable with the Category IV Drawbar.
The 6 & 21 spline PTO shafts and Category III Drawbar can be ordered from Parts if required.

Order Code	Catalog Number	Description	Approx. Weight (lb.)	List Price

FACTORY INSTALLED OPTIONS- CONTINUED

MISCELLANEOUS OPTIONS

	5020425JM	CD Player, Bluetooth, Radio with Antenna & Speakers (MP3 Compatible)	**In Base**
	5020424JM	Antenna and Speakers	(190.00)
215-CB002	7294181	Engine Block Heater	150.00
90-GR000	7294259	Less Power Beyond	(716.00)
225-LQ001	7294191	Water Separator (Fuel Filter)	461.00
250-GS001	7294185	Hydraulic Trailer Brakes	1,067.00
250-GS067	7294187	Hydraulic & Pneumatic Trailer Brakes	8,044.00
275-TC005	7294210	French Language OIB and Decals	No Charge
275-TC011	7294211	Spanish Language OIB and Decals	No Charge

FACTORY INSTALLED WEIGHTS

345-YB003	7294270*	850 kg. (1,875 lbs.) Monoblock Weight	3,406.00
345-YB004	7294271*	1500 kg. (3,306 lbs.) Monoblock Weight	5,677.00
345-YB005	7294272*	2300 kg. (5,070 lbs.) Monoblock Weight	8,711.00

***Not Compatible with Front Weight Package**

325-RD040	7294192	Rear Wheel Weights, 2 x 250 kg. (550 lbs.)	1,845.00
325-RD041	7294200	Rear Wheel Weights, 4 x 250 kg. (550 lbs.)	3,689.00
325-RD042	7294201	Rear Wheel Weights, 6 x 250 kg. (550 lbs.)	3,803.00

REAR FENDER OPTIONS

255-WD210	Base	2.10M (78.75") Wide Rear Fenders	**In Base**
255-WD012	7294265	2.00M Wide Rear Fenders	(177.00)
255-WD344*	7294266	2.10M Wide Rear Fenders with Rear 70+100mm Side Extensions	310.00
255-WD365*	7294267	2.45M Wide Rear Fenders with Rear 100mm Side Extensions	820.00
255-WD374*	7294268	2.45M Wide Rear Fenders with Rear 45+100mm Side Extensions	902.00
255-WD379*	7294269	2.45M Wide Rear Fenders with Rear 70+100mm Side Extensions	948.00

*** Not Compatible with Quick Hitch**

MASSEY FERGUSON®

Catalog Number	Description	Approx. Weight (lb.)	List Price
DEALER INSTALLED WEIGHTS			
5020186JM	Front Weight Package, 8 x 55 kg (121 lbs.)	968	1,530.00
5020187JM	Front Weight Package, 10 x 55 kg (121 lbs.)	1210	1,913.00
5020188JM	Front Weight Package, 12 x 55 kg (121 lbs.)	1452	2,295.00
5020189JM	Front Weight Package, 14 x 55 kg (121 lbs.)	1694	2,678.00
5020190JM	Front Weight Package, 16 x 55 kg (121 lbs.)	1936	3,060.00
5020191JM	Front Weight Package, 18 x 55 kg (121 lbs.)	2178	3,442.00
5020192JM	Front Weight Package, 24 x 55 kg (121 lbs.)	2904	4,590.00
5020426JM	Rear Wheel Weights, 2 x 250 kg (551 lbs.) Includes Adapters and Hardware to mount weight to the 10 bolt hub (Steel Center Rim)		2,029.00
5020427JM	Rear Wheel Weights, 4 x 250 kg (551 lbs.) Includes Adapters and Hardware to mount one weight to the 10 bolt hub and one weight to the rim (opposite side) (Steel center rim)		4,058.00
5020202JM	Rear Wheel Weights, 2 x 250 kg (551 lbs.) Includes Hardware to mount weight to Cast Center Wheel or to previously mounted 250kg weight; Up to three weights can be mounted together.		2,029.00

DEALER INSTALLED FRONT OUTER TIRE AND WHEELS

It is required that T0001 -- Michelin Brand, T0002 -- Goodyear Brand, T0007 -- Firestone, T0010 -- Trelleborg, be ordered for the factory to guarantee the correct tire brand is supplied on the tractor.

5020360JM	320/85R38 R1W Michelin Agribib R.C. (143A8/143B) Waffle Rim	7,105.00
5020381JM	380/80R38 R1W Firestone Radial (142A8/142B) All Traction DT	7,168.00
5020396JM	380/80R38 R1W Goodyear DT800 (142A8/142B)	7,017.00
5020363JM	380/80R38 R1W Michelin Agribib (142A8/142B) Waffle Rim	7,460.00
5020378JM	420/85R34 R1W Firestone Radial (147A/147B) All Traction DT	7,111.00
5020393JM	420/85R34 R1W Goodyear Super Traction Radial (147A8/147B)	7,238.00
5020414JM	420/85R34 R1W Trelleborg TM600 (142A8/139B)	6,961.00
5020354JM	420/85R34 R1W Michelin Agribib (142A8/142B) Waffle Rim	7,383.00
5020399JM	420/90R30 R1W Goodyear DT800 (147A8/147B)	6,304.00
5020405JM	420/90R30 R1W Firestone Radial (145A8/145B) All Traction DT	6,380.00
5020345JM	420/90R30 R1W Michelin Agribib (147A8/147B) Waffle Rim	6,783.00
5020408JM	480/70R34 R1W Firestone Radial 9000 (155A8/155B)	7,632.00
5020402JM	480/70R34 R1W Goodyear DT812 (146A8/146B)	6,937.00
5020411JM	480/70R34 R1W Trelleborg TM700 (143A8/143B)	6,937.00
5020357JM	480/70R34 R1W Michelin Omnibib (143D) Waffle Rim	7,740.00
5020375JM	380/85R34 R1W Firestone Radial (137A8/137B) All Traction DT	6,046.00
5020390JM	380/85R34 R1W Goodyear DT800 (137A/137B)	6,787.00
5020372JM	380/85R34 R1W Trelleborg TM600 (137A8/137B)	7,380.00
5020351JM	380/85R34 R1W Michelin Agribib (137A8/137B) Waffle Rim	6,991.00
5020384JM	420/85R30 R1W Goodyear Super Traction Radial (144A/144B)	6,023.00
5020366JM	420/85R30 R1W Trelleborg TM600 (140A8/137B)	5,853.00
5020342JM	420/85R30 R1W Michelin Agribib (137A8/134B) Waffle Rim	6,151.00

SPACER KITS ARE REQUIRED TO INSTALL FRONT OUTERS

72517923JM	15.5” Spacer Kit (To achieve 120" tread setting)	1,753.00
72517922JM	22.0” Spacer Kit	2,453.00

WHEEL TREAD SETTINGS

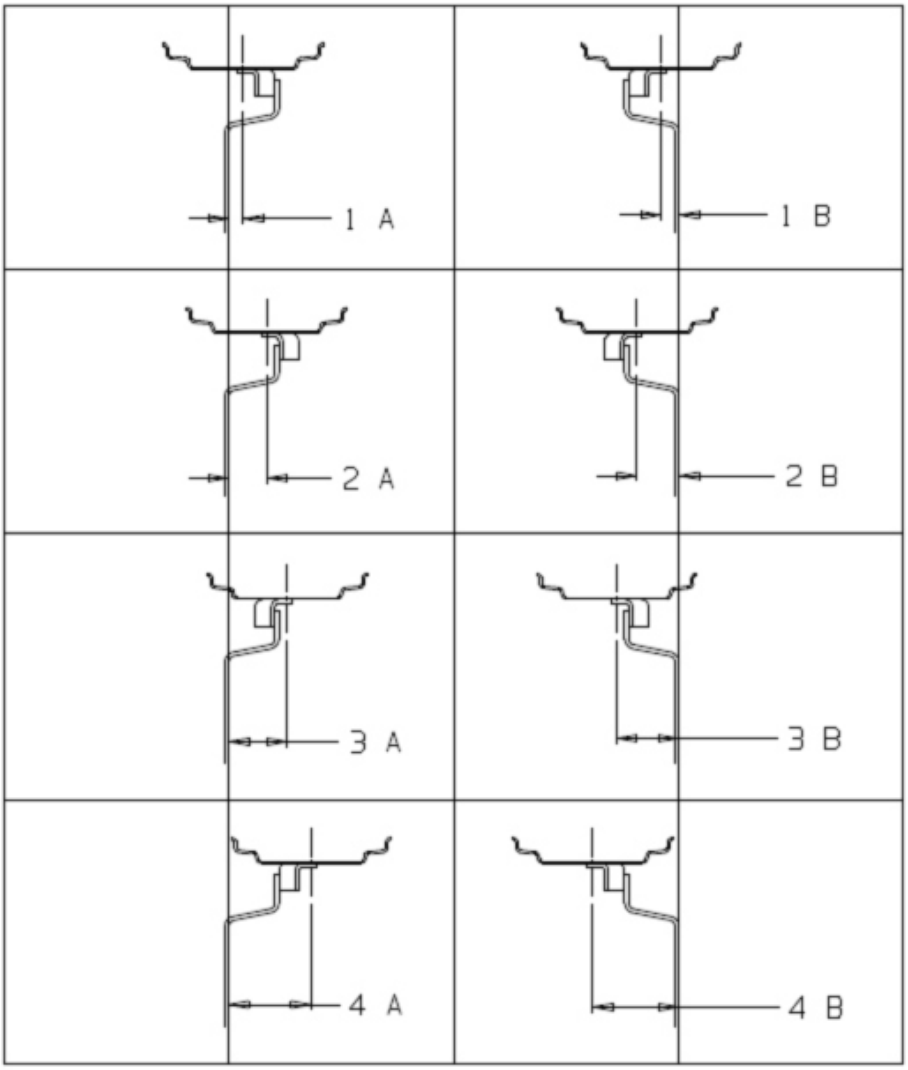

Position	Rims with Adjustable Disc	Track Width Reinforced Axle
Wheel Disc Facing Inwards	4A	61.4" (1560mm)
	3A	65.5" (1664mm)
	2A	69.4" (1764mm)
	1A	73.5" (1868mm)
Wheel Disc Facing Outward	1B	77.2" (1960mm)
	2B	81.3" (2064mm)
	3B	85.2" (2164mm)
	4B	89.3" (2268mm)

WHEEL TREAD SETTINGS

FRONT RIMS WITH WELDED DISKS:

Position	Rims with Welded Disc	Track Width Reinf. Axle
Wheel Disc Facing Inwards	1A	67.7" (1720mm)
Wheel Disc Facing Outward	1B	81.3" (2064mm)

WHEEL TREAD SETTINGS

REAR RIMS - SINGLE:

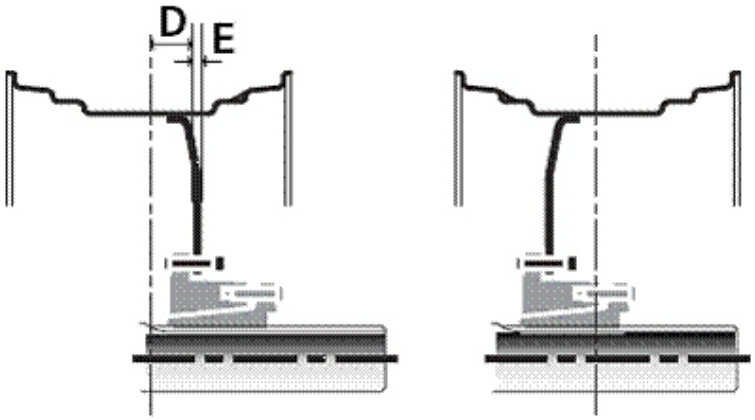

D = Rim offset 2.95" (75mm), E = Rim Disk thickness. 59" (15mm)		
	Disc Facing Inward (min/max)	**Disc Facing Outward (min/max)**
HA260 Short Bar Axle	70.1" (1780 mm) / 83.1" (2112 mm)	82.9" (2106 mm) / 96.0" (2438 mm)
HA260 Long Bar Axle	68.6" (1743 mm) / 112.7" (2862 mm)	81.5" (2069 mm) / 125.5" (3188 mm)

REAR RIMS - SINGLE:

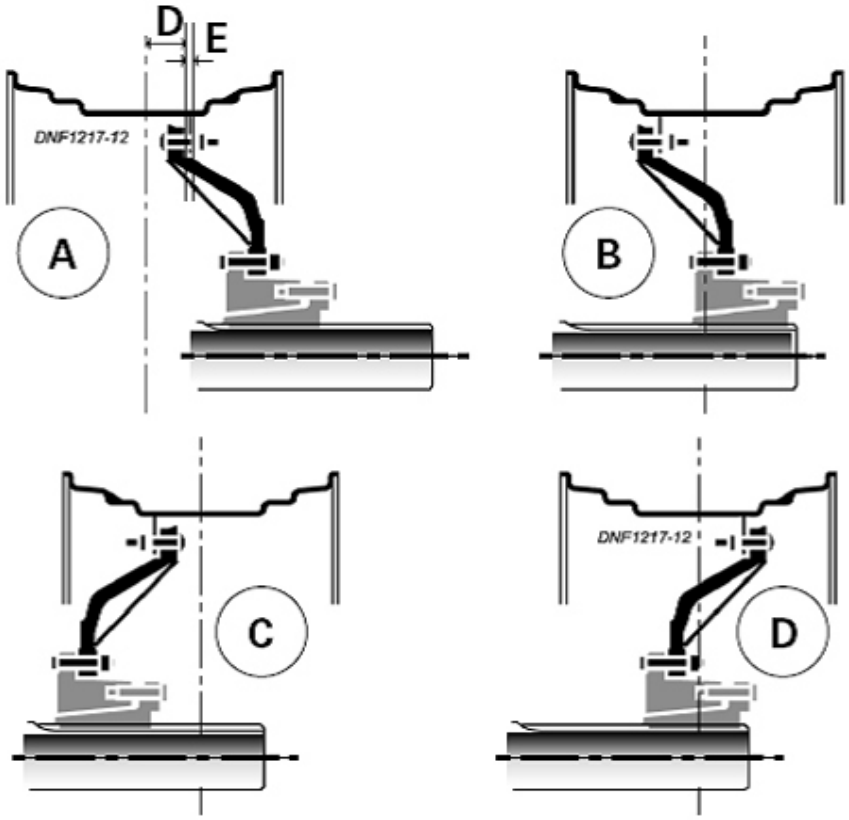

D = Rim offset 2.95" (75mm), E = Rim Disk thickness. 59" (15mm)		
	Disc Facing Inward (min/max)	**Disc Facing Outward (min/max)**
HA260 Short Bar Axle	A - 61.6" (1566 mm) / 74.7" (1898 mm)	D - 81.5" (2070 mm) / 94.6" (2402 mm)
	B - 74.5" (1892 mm) / 87.5" (2224 mm)	C - 94.3" (2396 mm) / 107.4" (2728 mm)
HA260 Long Bar Axle	A - 60.2" (1529 mm) / 104.2" (2648 mm)	D - 80.1" (2033 mm) / 124.1" (3152 mm)
	B - 73.0" (1855 mm) / 117.1" (2974 mm)	C - 92.9" (2359 mm) / 136.9" (3478 mm)

WHEEL TREAD SETTINGS

REAR RIMS - OUTER DUALS:

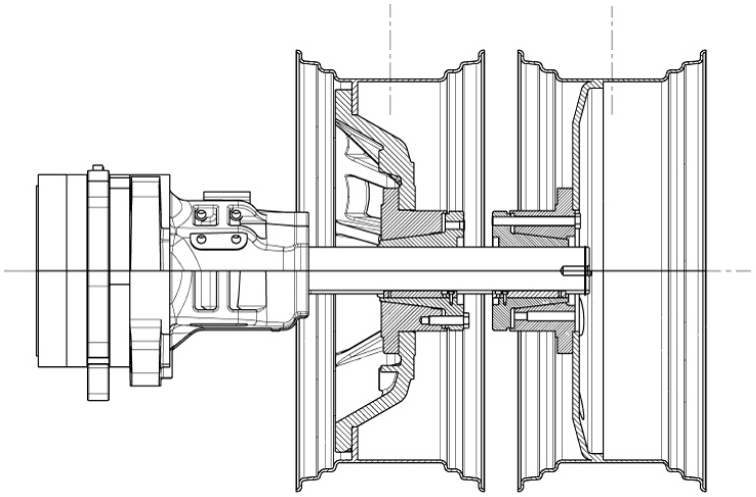

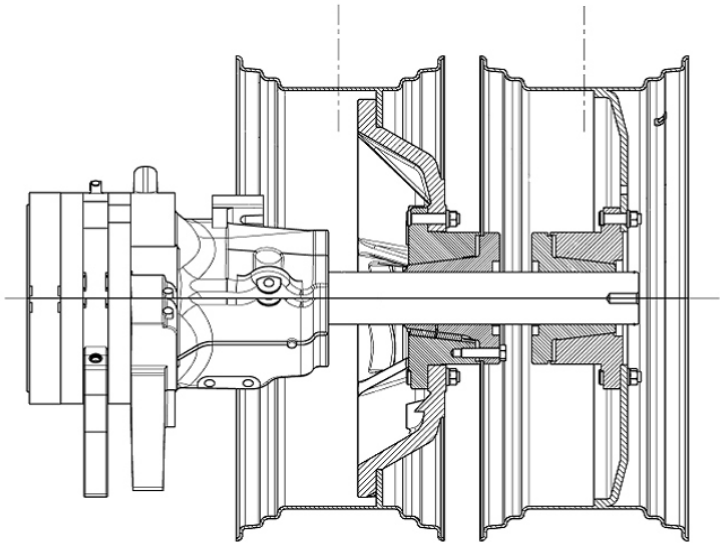

D = Rim offset 2.95" (75mm), E = Rim Disk thickness. 59" (15mm)		
	Disc Facing Inward (max)	**Disc Facing Outward (max)**
HA260 Long Bar Axle	112.7" (2862 mm)	125.5" (3188 mm)

MASSEY FERGUSON®

IMPLEMENTS

MASSEY FERGUSON®

IMPLEMENTS INDEX

PAGE

LOADERS 5
LOADER APPLICATION GUIDE 6

Loaders for Compact and Utility Tractors
MF DL95 COMPACT LOADER 8
MF L100E COMPACT LOADER 9
MF L105E COMPACT LOADER 10
MF DL125 COMPACT LOADER 11
MF DL135 COMPACT LOADER 13
MF L135E UTILITY LOADER 15
MF 911X UTILITY LOADER 17
MF 921X UTILITY LOADER 19
MF 926X UTILITY LOADER 21
MF 931X UTILITY LOADER 25
MF 936X UTILITY LOADER 27
MF 931 / MF 936 LOADER 31

Loaders for Mid-Range and High Horse Power Tractors
MF 931 / MF 936 LOADER 31
MF 941X / MF946X LOADER 35
MF 941 / MF 946 LOADER 38
MF 951 / MF 958 LOADER 42
MF 961 / MF 968 LOADER 46
MF 978 LOADER 50
MF 988 LOADER 54
FIELD INSTALLED LOADER OPTIONS 57

IMPLEMENTS INDEX

PAGE

MOWERS 60

MOWER APPLICATION CHART 61
MF2315, MF2320, MF2326 MOWER 62
MF1505 MID-MOUNT MOWER 64
MF1705 MID-MOUNT MOWER 66

BACKHOES 68

BACKHOE APPLICATION CHART 69
MF CB75 BACKHOE 70
MF CB85 BACKHOE 72

FRONT MOUNTED 74

FRONT MOUNTED APPLICATION CHART 75
MF 2335 AND 2340 BLADE 76
MF 1405 FRONT DOZER BLADE 77
MF 1545 FRONT DOZER BLADE 78
MF 1550 FRONT DOZER BLADE 79
MF 2360 SNOW BLOWER 80
MF 1410 SNOW BLOWER 81
MF 1507 SNOW BLOWER 82
MF 2330 ROTARY BROOM 83
MF 1415 ROTARY BROOM 84
MF 1535 ROTARY BROOM 85

3-POINT REAR MOUNTED 86

3-POINT REAR MOUNTED APPLICATION CHART 87
MF 1680 SNOW BLOWER 88
MF 1692 SNOW BLOWER 89

MASSEY FERGUSON®

RESERVED

MASSEY FERGUSON®

LOADERS

MASSEY FERGUSON®

LOADER APPLICATION CHART

Note: For specific tractor/loader applications and loader attachment/accessories, refer to loader price pages.

TRACTOR MODEL	DL95 Loader	L100E Loader	L105E Loader	DL125 Loader	DL135 Loader
GC1705, 1710, 1715, 1720	X				
1526		X			
1726E, 1734E, 1739E			X		
1736, 1742				X	
1749, 1754, 1758, 1759					X

TRACTOR MODEL	L135E Loader	MF 911X Loader	MF 921X Loader Non Self-Leveling	MF 926X Loader Mechanical Self-Leveling	MF 931X Loader Non Self-Leveling	MF 936X Loader Mechanical Self-Leveling	MF931 Loader Non Self-Leveling	MF936 Loader Mechanical Self-Leveling
2600H Series 2605, 2615, 2635	2WD ONLY	4WD ONLY						
2700E	X							
4607M, 4608			X	X				
4609, 4610					X	X		
4609M, 4610M					X	X	X	X
4700					X	X	X	X
5609, 5610							X	X

LOADER APPLICATION CHART

MASSEY FERGUSON®

Note: For specific tractor/loader applications and loader attachment/accessories, refer to loader price pages.

TRACTOR MODEL	MF941X Loader	MF946X Loader	MF941 Loader	MF946 Loader	MF951 Loader	MF958 Loader	MF961 Loader	MF968 Loader	MF978 Loader	MF988 Loader
MF5609 MF5610			X	X						
MF5611 MF5612 MF5613			X	X						
MF5710 MF5711	X	X	X	X						
MF5711SL MF5712SL MF5713SL			X	X						
MF6712 MF6713	X	X	X	X						
MF6614 MF6615 MF6616					X	X				
MF7614 MF7615 MF7616 MF7618 MF7714 MF7715 MF7716 MF7718							X	X		
MF7619 MF7620 MF7622 MF7719 MF7720 MF7722									X	
MF7624 MF7626 MF7724 MF7726 MF8600 Series MF8700 Series										X

MF DL95 COMPACT LOADER

QUICK ATTACH MOUNT LOADER

MASSEY FERGUSON®

(F.O.B. TELFORD, TN)

FEATURES

- One Piece Main Frame with Tapered Arms and Single Cross Member
- Quick Attach Loader Frame Mount with Pin Lock
- Built-in Parking Stands
- (2) 1.6 inch Double Acting Lift Cylinders
- (2) 1.75 inch Double Acting Bucket Cylinders
- Regenerative Hydraulics for Simultaneous Operation of Lift/Lower and Curl/Dump Functions
- Hydraulic Lines Routed Inside Main Frame for Protection and Visibility
- Galvanized Steel Pins with Bushings at Key Points
- Recessed Grease Zerk Points
- 48-inch Standard Duty Pin-Type Bucket
- Grille Guard Standard
- Fits all GC1700 Series Tractors
- Maximum Lift Height: 72.8 Inches
- Lift Capacity to Full Height @ 19.6 inches Forward of Pivot Pin: 580 lbs
- Breakout Force: 920 lbs
- Rated Hydraulic Pressure: 1914 PSI

Note: Tractors must be properly ballasted for loader operation. See Operator's Manual for information.

Note: Specifications may vary between tractor models, tires and hydraulic options.

Order Code	Catalog Number	Description	Approx. Weight (lb.)	List Price
For a Complete Loader, Select One Order Code from Group 01 though Group 03				
For Buckets and Accessories Order as Required From Groups 04 and 05				
BASE MACHINE				**Group 01**
ZL09A1E 0L000M	72533625	MF DL95 Base Loader - Pin Type Style, Includes Hoses	275	1,909.00
SUBFRAME MOUNTING KIT				**Group 02**
	72533646M	Subframe Kit and Grille Guard for GC1700 Series Tractors	115	510.00
HYDRAULICS				**Group 03**
	72533661M	Hydraulic Valve Kit for GC1705 Non-Factory Valves (Includes Hoses to Base Loader) (Requires Qty 1 - 6259420M1 Flange and Qty 2 - 3702462M1 "O" Ring from AGCO Parts, Batavia)	60	789.00
BUCKETS - OPTIONAL				**Group 04**
	72533674M	48-inch Pin Type Material Bucket	135	460.00
	72533916M	54-inch Pin Type Material Bucket		399.00
ACCESSORIES - OPTIONAL				**Group 05**
	72533918M	Quick Attach Tool Carrier for 48-inch or 54 inch Pin Type Bucket		269.00
	72533706M	Front Weight Bracket Kit (Requires Grille Guard)		119.00

MF L100E COMPACT LOADER

QUICK ATTACH MOUNT LOADER

(F.O.B. TELFORD, TN)

MASSEY FERGUSON®

FEATURES

- One Piece Main Frame with Tapered Arms and Single Cross Member
- Quick Attach Loader Frame Mount with Pin Lock
- Built-in Parking Stands
- (2) 1.78 inch Double Acting Lift Cylinders
- (2) 1.78 inch Double Acting Bucket Cylinders
- Regenerative Hydraulics for Simultaneous Operation of Lift/Lower and Curl/Dump Functions
- Hydraulic Lines Routed Inside Main Frame for Protection and Visibility
- Galvanized Steel Pins with Bushings at Key Points
- Recessed Grease Zerk Points
- 54-inch Standard Duty Pin-Type Bucket
- Grille Guard Standard
- Fits MF1526 Tractors
- Maximum Lift Height: 83 Inches @ Pivot Pin
- Lift Capacity to Full Height @ 19.5 inches Forward of Pivot Pin: 820 lbs
- Breakout Force: 1750 lbs @ Pivot Pin
- Rated Hydraulic Pressure: 2132 PSI
- Maximum Roll Back Angle: 32 degrees
- Dump Angle: 42 degrees
- **NOTE:** Compatible with MF1505 Mid-Mount Mower

Note: Tractors must be properly ballasted for loader operation. See Operator's Manual for information.

Note: Specifications may vary between tractor models, tires and hydraulic options.

Order Code	Catalog Number	Description	Approx. Weight (lb.)	List Price
For a Complete Loader, Select One Order Code from Group 01 through Group 03				
For Buckets and Accessories Order as Required From Groups 04 and 05				
BASE MACHINE				**Group 01**
CL12A6E 0L000M	72533912	MF L100E Base Loader - Pin Type Style, Includes Hoses	295	1,845.00
SUBFRAME MOUNTING KIT				**Group 02**
	72533914M	Subframe Kit and Grille Guard for MF1526 Tractors	145	618.00
HYDRAULICS				**Group 03**
	72533929M	Direct Control Valve Kit for MF1526, Direct Control Valve with Float, for Operation of the Lift/Lower and Curl/Dump Functions (Includes Hoses to Base Loader)	28	716.00
BUCKETS - OPTIONAL				**Group 04**
	72533916M	54-inch Pin Type Material Bucket	146	399.00
ACCESSORIES - OPTIONAL				**Group 05**
	72533918M	Quick Attach Tool Carrier for 54-inch Pin Type Bucket	41	269.00

MF L105E COMPACT LOADER

QUICK ATTACH MOUNT LOADER

MASSEY FERGUSON®

(F.O.B. TELFORD, TN)

FEATURES

- One Piece Main Frame with Tapered Arms and Single Cross Member
- Quick Attach Loader Frame Mount with Pin Lock
- Built-in Parking Stands
- Bucket Level Indicator
- (2) 2.0 inch Double Acting Lift Cylinders
- (2) 2.2 inch Double Acting Bucket Cylinders
- Hydraulic Lines Routed Inside Main Frame for Protection and Visibility
- Galvanized Steel Pins with Bushings at Key Points
- Recessed Grease Zerk Points
- Skid Steer or Pin-Type Implement Attachments
- Grille Guard Standard
- Fits all MF1700E Series Economy Compact Tractor Models with R1 AG, R3 Turf or R4 Industrial Tires
- Maximum Lift Height: 95.7 inches at Pivot
- Lift Capacity to Full Height @ 19.6 inches Forward of Pivot Pin: 830 lbs
- Breakout Force: 1460 lbs
- Rated Hydraulic Pressure: 2132 PSI

Note: Tractors must be properly ballasted for loader operation. See Operator's Manual for information.

Note: Specifications may vary between tractor models, tires and hydraulic options.

Order Code	Catalog Number	Description	Approx. Weight (lb.)	List Price
		For a Complete Loader, Select One Order Code from Group 01 through Group 03		
		For Buckets and Accessories Order as Required From Groups 04 through 06		
BASE MACHINE				**Group 01**
ZL13A1E 0W000M	72533627	MF L105E Base Loader - Pin Type Style		2,154.00
SUBFRAME MOUNTING KIT				**Group 02**
	72533647M	Subframe Kit and Grille Guard for MF1726E, MF1734E and MF1739E Tractors	200	992.00
HYDRAULICS				**Group 03**
	72533930M	Direct Control Valve Kit for MF1700E Tractors, Direct Control Valve with Float, for Operation of the Lift/Lower and Curl/Dump Functions (Includes Hoses to Base Loader)	60	833.00
BUCKETS - OPTIONAL				**Group 04**
	72533678M	60-inch Skid Steer Material Bucket (Requires 72533709M)	195	549.00
	72533675M	60-inch Pin Type Material Bucket	195	669.00
ATTACHMENTS - OPTIONAL				**Group 05**
	72533690M	38-inch Skid Steer Pallet Fork (Requires 72533709M) 2,205 lbs (1000 kg) Capacity	350	1,009.00
ACCESSORIES - OPTIONAL				**Group 06**
	72533709M	Skid Steer Type Bucket Quick Attach Tool Carrier Kit		559.00
	72533711M	Front Weight Bracket Kit (Requires Grille Guard)		129.00
	72533837M	Bucket Level Indicator Kit		69.00

MF DL125 COMPACT LOADER

QUICK ATTACH MOUNT LOADER

(F.O.B. TELFORD, TN)

MASSEY FERGUSON®

FEATURES

- One Piece Main Frame with Tapered Arms and Single Cross Member
- Quick Attach Loader Frame Mount with Pin Lock
- Built-in Parking Stands
- Bucket Level Indicator
- (2) 2.4 inch Double Acting Lift Cylinders
- (2) 2.4 inch Double Acting Bucket Cylinders
- Hydraulic Lines Routed Inside Main Frame for Protection and Visibility
- 3rd Function Capable, Soft-Drive Capable
- Galvanized Steel Pins with Bushings at Key Points
- Recessed Grease Zerk Points
- Universal Skid Steer or Alo-exclusive Compact Quick Attach Implement Attachment Designs
- Grille Guard Standard
- Fits MF1736 and MF1742 Compact Tractor Models with R1 AG, R3 Turf, or R4 Industrial Tires
- Maximum Lift Height: 102.4 Inches at Pivot
- Lift Capacity to Full Height @ 19.6 inches Forward of Pivot Pin: 1300 lbs
- Breakout Force: 2190 lbs
- Rated Hydraulic Pressure: 2277 PSI

Note: Tractors must be properly ballasted for loader operation. See Operator's Manual for information.

Note: Specifications may vary between tractor models, tires and hydraulic options.

Order Code	Catalog Number	Description	Approx. Weight (lb.)	List Price
		For a Complete Loader, Select One Order Code from Group 01 through Group 03		
		For Additional Hydraulics, Buckets and Accessories Order as Required From Groups 04 through 07		
BASE MACHINE				**Group 01**
ZL16N1E 1W000M	72533629	MF DL125 Base Loader - Skid Steer Style	500	2,963.00
ZL16N1E 2W000M	72533630	MF DL125 Base Loader - Compact Quick Attach Style	470	2,589.00
SUBFRAME MOUNTING KIT				**Group 02**
	72533648M	Subframe Kit with Grille Guard for MF1736 / 1742 Tractors	235	729.00
HYDRAULICS				**Group 03**
	72533663M	Mid-Mount Hose Kit for MF1700 Series Tractors (Required to connect loader steel lines to factory installed tractor mid-valves)	10	227.00
ADDITIONAL HYDRAULIC OPTIONS				**Group 04**
	72533665M	Soft Drive Ride Control System	20	579.00
	72533934M	Third Function Valve with Deutsch Connector (Requires Wiring Harness)	20	769.00
	72533667M	Wiring Harness for Third Function (with Knob)	2	189.00

MF DL125 COMPACT LOADER

QUICK ATTACH MOUNT LOADER

MASSEY FERGUSON®

Order Code	Catalog Number	Description	Approx. Weight (lb.)	List Price
BUCKETS - OPTIONAL				**Group 05**
	72533679M	66-inch Skid Steer Material Bucket	212	529.00
	72533680M	72-inch Skid Steer Material Bucket	228	569.00
	72533922M	72-inch High Volume HD Skid Steer Material Bucket Pre-Drilled to Accept a Bolt-on Cutting Edge	345	999.00
	72533681M	66-inch Compact Quick Attach Material Bucket	212	639.00
	72533682M	72-inch Compact Quick Attach Material Bucket	228	669.00
ATTACHMENTS - OPTIONAL				**Group 06**
	72533690M	38-inch Skid Steer Pallet Fork 2,205 lbs (1000 kg) Capacity	350	1,009.00
	72533691M	38-inch Compact Quick Attach Pallet Fork 2,205 lbs (1000 kg) Capacity	325	909.00
	72533696M	Round Bale Spike for Compact Quick Attach	144	639.00
ACCESSORIES - OPTIONAL				**Group 07**
	72533937M	72-inch Bolt-On Cutting Edge (Bucket will Require Drilling Unless Noted in Bucket Description)		210.00
	72533732M	Weld-On Hook Kit for Compact Quick Attach		169.00
	72533711M	Front Weight Bracket Kit (Requires Grille Guard)		129.00
	72533838M	Bucket Level Indicator Kit		69.00

MF DL135 COMPACT LOADER

QUICK ATTACH MOUNT LOADER

(F.O.B. TELFORD, TN)

MASSEY FERGUSON®

FEATURES

- One Piece Main Frame with Tapered Arms and Single Cross Member
- Quick Attach Loader Frame Mount with Pin Lock
- Built-in Parking Stands
- Bucket Level Indicator
- (2) 2.75 inch Double Acting Lift Cylinders
- (2) 2.75 inch Double Acting Bucket Cylinders
- Hydraulic Lines Routed Inside Main Frame for Protection and Visibility
- 3rd Function Capable, Soft-Drive Capable
- Galvanized Steel Pins with Bushings at Key Points
- Recessed Grease Zerk Points
- Universal Skid Steer or Alo-exclusive Compact Quick Attach Implement Attachment Designs
- Grille Guard Standard
- Fits MF1749, 1754, 1758, 1759 Compact Tractor Models with R1 AG, R3 Turf, or R4 Industrial Tires
- Maximum Lift Height: 110.2 Inches at Pivot
- Lift Capacity to Full Height @ 19.6 inches Forward of Pivot Pin: 1760 lbs
- Breakout Force: 2870 lbs
- Rated Hydraulic Pressure: 2277 PSI

Note: Tractors must be properly ballasted for loader operation. See Operator's Manual for information.

Note: Specifications may vary between tractor models, tires and hydraulic options

Order Code	Catalog Number	Description	Approx. Weight (lb.)	List Price
For a Complete Loader, Select One Order Code from Group 01 through Group 03				
For Additional Hydraulics, Buckets and Accessories Order as Required From Groups 04 through 07				
BASE MACHINE				**Group 01**
ZL18N1E 1W000M	72533632	MF DL135 Base Loader - Skid Steer Style	670	3,303.00
ZL18N1E 2W000M	72533633	MF DL135 Base Loader - Compact Quick Attach Style	655	3,139.00
SUBFRAME MOUNTING KITS				**Group 02**
	72533854M	Subframe Kit for MF1749 Tractors	295	749.00
	72533851M	Subframe Kit for MF1754 and 1758 with Shuttle Transmission	295	749.00
	72533852M	Subframe Kit for MF1754 and 1758 with Hydro Transmission	295	749.00
	72533853M	Subframe Kit for MF1759	295	749.00
HYDRAULICS				**Group 03**
	72533663M	Mid-Mount Hose Kit for MF1700 Series Tractors (Required to connect loader steel lines to factory installed tractor mid-valves)	10	227.00
ADDITIONAL HYDRAULIC OPTIONS				**Group 04**
	72533665M	Soft Drive Ride Control System	20	579.00
	72533934M	Third Function Valve with Deutsch Connector (Requires Wiring Harness)	20	769.00
	72533667M	Wiring Harness for Third Function (with Knob)	2	189.00

MF DL135 COMPACT LOADER

QUICK ATTACH MOUNT LOADER

MASSEY FERGUSON®

Order Code	Catalog Number	Description	Approx. Weight (lb.)	List Price
BUCKETS - OPTIONAL				**Group 05**
	72533680M	72-inch Skid Steer Material Bucket	228	569.00
	72533922M	72-inch High Volume HD Skid Steer Material Bucket Pre-Drilled to Accept a Bolt-on Cutting Edge	345	999.00
	72533682M	72-inch Compact Quick Attach Material Bucket	228	669.00
ATTACHMENTS - OPTIONAL				**Group 06**
	72533690M	38-inch Skid Steer Pallet Fork 2,205 lbs (1000 kg) Capacity	350	1,009.00
	72533695M	Round Bale Spike for Skid Steer	144	699.00
	72533691M	38-inch Compact Quick Attach Pallet Fork 2,205 lbs (1000 kg) Capacity	325	909.00
	72533696M	Round Bale Spike for Compact Quick Attach	144	639.00
ACCESSORIES - OPTIONAL				**Group 07**
	72533937M	72-inch Bolt-On Cutting Edge (Bucket will Require Drilling Unless Noted in Bucket Description)		210.00
	72533732M	Weld-On Hook Kit for Compact Quick Attach		169.00
	72533711M	Front Weight Bracket Kit (Requires Grille Guard)		129.00
	72533838M	Bucket Level Indicator Kit		69.00

MF L135E UTILITY LOADER

QUICK ATTACH MOUNT LOADER

(F.O.B. TELFORD, TN)

MASSEY FERGUSON®

FEATURES

- One Piece Main Frame with Tapered Arms and Single Cross Member
- Quick Attach Loader Frame Mount with Pin Lock
- Built-in Parking Stands
- Bucket Level Indicator
- (2) 2.75 inch Double Acting Lift Cylinders
- (2) 2.75 inch Double Acting Bucket Cylinders
- Hydraulic Valves with Integrated Joystick Mount to Right Side Loader Subframe
- Hydraulic Lines Routed Inside Main Frame for Protection and Visibility
- Galvanized Steel Pins with Bushings at Key Points
- Recessed Grease Zerk Points
- Universal Skid Steer or Pin-Type Implement Attachments
- Grille Guard Standard
- Fits all MF2600H T4F Series 2wd Tractor Models
- Fits all MF2700E Series Tractor Models
- Fits all MF2600 T4i Series 2wd Tractor Models with R1 AG or R4 Industrial Tires
- Maximum Lift Height: 110.2 Inches at Pivot
- Lift Capacity to Full Height @ 19.6 inches Forward of Pivot Pin: 1770 lbs
- Breakout Force: 2870 lbs
- Rated Hydraulic Pressure: 2277 PSI

Note: Tractors must be properly ballasted for loader operation. See Operator's Manual for information.

Note: Specifications may vary between tractor models, tires and hydraulic options.

Order Code	Catalog Number	Description	Approx. Weight (lb.)	List Price
For a Complete Loader, Select One Order Code from Group 01 through Group 03				
For Buckets and Accessories Order as Required From Groups 04 through 06				
BASE MACHINE				**Group 01**
ZL18A1E 0W000M	72533631	MF L135E Base Loader - Pin Type Style	570	2,523.00
SUBFRAME MOUNTING KITS				**Group 02**
	72533839M	Subframe Kit for MF2600H T4F Series 2wd Tractors		749.00
	72533852M	Subframe Kit for MF2700E Series Tractors	295	749.00
	72533655M	Subframe Kit for MF2605 and MF2615 - 3 Cylinder 2wd with Grille Guard	405	819.00
	72533656M	Subframe Kit for MF2635 - 4 Cylinder 2wd with Grille Guard	475	779.00
HYDRAULICS				**Group 03**
	72533844M	Direct Control Valve Kit for MF2600H T4F Series 2wd, Direct Control Valve with Float, for Operation of the Lift/Lower and Curl/Dump Functions (Includes Hoses to Base Loader)		867.00
	72533931M	Direct Control Valve Kit for MF2700E Series, Direct Control Valve with Float, for Operation of the Lift/Lower and Curl/Dump Functions (Includes Hoses to Base Loader)	60	867.00
	72533668M	Direct Control Valve Kit for MF2600 T4i Series 2wd, Direct Control Valve with Float, for Operation of the Lift/Lower and Curl/Dump Functions (Includes Intermediate Hoses to Base Loader)	60	959.00

MF L135E UTILITY LOADER

QUICK ATTACH MOUNT LOADER

MASSEY FERGUSON®

Order Code	Catalog Number	Description	Approx. Weight (lb.)	List Price
BUCKETS - OPTIONAL				**Group 04**
	72533680M	72-inch Skid Steer Material Bucket (Requires 72533709M)	228	569.00
	72533922M	72-inch High Volume HD Skid Steer Material Bucket Pre-Drilled to Accept a Bolt-on Cutting Edge	345	999.00
	72533677M	72-inch Pin Type Material Bucket	230	549.00
ATTACHMENTS - OPTIONAL				**Group 05**
	72533690M	38-inch Skid Steer Pallet Fork 2,205 lbs (1000 kg) Capacity	350	1,009.00
	72533695M	Round Bale Spike for Skid Steer	144	699.00
ACCESSORIES - OPTIONAL				**Group 06**
	72533937M	72-inch Bolt-On Cutting Edge (Bucket will Require Drilling Unless Noted in Bucket Description)		210.00
	72533709M	Skid Steer Type Bucket Quick Attach Tool Carrier Kit		559.00
	72533711M	Front Weight Bracket Kit (Requires Grille Guard)		129.00
	72533838M	Bucket Level Indicator Kit		69.00

MF 911X LOADER

NON SELF-LEVELING

(F.O.B. TELFORD, TN)

MASSEY FERGUSON®

FEATURES

- One Piece Main Frame with Tapered Arms and Single Cross Member
- Quick Attach Loader Frame Mount with Pin Lock
- Built-in Parking Stands
- (2) 2.4 inch (60mm) Double Acting Lift Cylinders
- (2) 2.4 inch (60mm) Double Acting Bucket Cylinders
- Hydraulic Lines Routed Inside Main Frame for Protection and Visibility
- Galvanized Steel Pins with Bushings at Key Points
- Recessed Grease Zerk Points
- Universal Skid Steer or Euro Hook Type Implement Attachments
- Grille Guard Standard
- Fits all MF2600H T4F and MF2600 T4i Series 4wd Tractors
- Rated on MF2635 Tractor with 9.5-24 Front Tires and 16.9-28 Rear Tires
- Powder Painted with Corrosion Protection
- Bucket Level Indicator
- Lift Capacity to Full Height @ 31.5 inches Forward of Pivot Pin: 1510 lbs
- Maximum Lift Height: 115 inches at Pivot
- Breakout Force: 2750 lbs
- Rated Hydraulic Pressure: 2755 PSI

Note: Tractors must be properly ballasted for loader operation. See Operator's Manual for information.

Note: Specifications may vary between tractor models, tires and hydraulic options.

Order Code	Catalog Number	Description	Approx. Weight (lb.)	List Price
		For a Complete Loader, Select One Order Code from Group 01 through Group 03		
		For Additional Hydraulics, Buckets and Accessories Order as Required From Groups 04 through 07		
BASE MACHINE				**Group 01**
XL11N1D 1200M	72533634	MF 911X Base Loader - Skid Steer Style	660	3,809.00
XL11N1D 8200M	72533635	MF 911X Loader - Euro Style	650	3,999.00
SUBFRAME MOUNTING KIT				**Group 02**
	72533840M	Subframe Kit for MF2600H T4F Series 4wd Tractors		1,499.00
	72533657M	Subframe Kit for MF2600 T4i Series 4wd Tractors	510	1,499.00
HYDRAULICS				**Group 03**
	72533845M	Direct Control Valve Kit for MF2600H T4F Series 4wd , Direct Control Valve with Float, for Operation of the Lift/Lower and Curl/Dump Functions (Includes Hoses to Base Loader)		1,059.00
	72533669M	Direct Control Valve Kit for MF2600 T4i Series 4wd, Direct Control Valve with Float, for Operation of the Lift/Lower and Curl/Dump Functions (Includes Intermediate Hoses to Base Loader)	60	1,059.00
ADDITIONAL HYDRAULIC OPTIONS				**Group 04**
	72533672M	Third Function Valve with Deutsch Connector (Requires Wiring Harness 72533729M)	20	869.00
	72533729M	Wiring Harness for Third Function (with Buttons)	2	129.00

MF 911X LOADER

NON SELF-LEVELING

MASSEY FERGUSON®

Order Code	Catalog Number	Description	Approx. Weight (lb.)	List Price
BUCKETS - OPTIONAL				**Group 05**
		Skid Steer Style		
	72533683M	72-inch Skid Steer Material Bucket 180U, 17 cu ft	381	599.00
	72533684M	84-inch Skid Steer Material Bucket 210U, 19 cu ft	432	759.00
		Euro Style		
	72533685M	72-inch Euro Style Material Bucket 180U, 17 cu ft	381	659.00
	72533686M	84-inch Euro Style Material Bucket 210U, 19 cu ft	432	839.00
ATTACHMENTS - OPTIONAL				**Group 06**
		Skid Steer Style		
	72533692M	48-inch Pallet Fork - 3,520 lbs (1,600 kg) Capacity	425	1,189.00
	72533695M	Round Bale Spike	144	699.00
		Euro Style		
	72556283M	48-inch Pallet Fork - 3,520 lbs (1,600 kg) Capacity	403	1,029.00
	72556073M	Round Bale Spike	144	683.00
ACCESSORIES - OPTIONAL				**Group 07**
	72533937M	72-inch Bolt-On Cutting Edge (Bucket will Require Drilling Unless Noted in Bucket Description, for Use with 180U Buckets)		210.00
	72533693M	Log Grab (Requires 48-inch Pallet Fork)	185	1,847.00
	72556070M	Weld-On Hook Kit for Euro Tool Carrier	30	231.00

MF 921X LOADER

NON SELF-LEVELING

(F.O.B. Telford, TN)

MASSEY FERGUSON®

FEATURES

- One Piece Main Frame with Tapered Arms and Single Cross Member
- Quick Attach Loader Frame Mount with Pin Lock
- Built-in Parking Stands
- (2) 2.6 inch (65mm) Double Acting Lift Cylinders
- (2) 2.6 inch (65mm) Double Acting Bucket Cylinders
- Hydraulic Lines Routed Inside Main Frame for Protection and Visibility
- Galvanized Steel Pins with Bushings at Key Points
- Recessed Grease Zerk Points
- Universal Skid Steer or Euro Hook Type Implement Attachments
- Grille Guard Standard
- Fits MF4607M T4F and MF4608 T4i 2wd and 4wd Tractor Models
- Rated on MF4608 Tractor with 9.5-24 Front Tires and 16.9-30 Rear Tires
- Powder Painted with Corrosion Protection
- Bucket Level Indicator
- Lift Capacity to Full Height @ 31.5 inches Forward of Pivot Pin: 1920 lbs
- Maximum Lift Height: 124 inches at Pivot
- Breakout Force: 3200 lbs
- Rated Hydraulic Pressure: 2828 PSI

Note: Tractors must be properly ballasted for loader operation. See Operator's Manual for information.

Note: Specifications may vary between tractor models, tires and hydraulic options.

Order Code	Catalog Number	Description	Approx. Weight (lb.)	List Price
For a Complete Loader, Select One Order Code from Group 01 through Group 04				
For Additional Hydraulics, Buckets and Accessories Order as Required From Groups 05 through 08				
BASE MACHINE				**Group 01**
XL21N1D 1A00M	72533823	MF921X Base Loader - Skid Steer Style for MF4600M T4F	810	4,018.00
XL21N1D 8A00M	72533824	MF921X Base Loader - Euro Style for MF4600M T4F	800	4,399.00
XL21N1D 1200M	72533638	MF921X Base Loader - Skid Steer Style for MF4600 T4i	810	4,018.00
XL21N1D 8200M	72533639	MF921X Base Loader - Euro Style for MF4600 T4i	800	4,399.00
SUBFRAME MOUNTING KIT				**Group 02**
	72533842M	Loader Uprights, Side Rails and Grille Guard for MF4600M **Non-Loader Provision** Tractors		1,990.00
	72533841M	Loader Uprights and Grille Guard for MF4600M **Loader Provision** Tractors		1,080.00
	72533658M	Subframe Kit for MF4608 Tier 4i Tractors	375	1,990.00
LIGHT RELOCATION KIT				**Group 03**
	72533750M	Light Relocation Kit for MF4600 Tier 4i **Cab** Tractors (**Required for ALL Cabs**)	15	30.00
HYDRAULICS				**Group 04**
	72533846M	Mid-Mount Hose Kit for MF4600M Tractors		301.00
	TBD	Joystick and Valve Kit required with Non-Loader Provision MF4600M Series Tractors		Order From Parts
	72533847M	Mid-Mount Hose Kit for MF4610LP Tractors (Includes Joystick Controller Support for Dealer Installed Valve Set)		331.00
	72533670M	Mid-Mount Hose Kit for MF4600 T4i Tractors	15	357.00

MF 921X LOADER

NON SELF-LEVELING

MASSEY FERGUSON®

Order Code	Catalog Number	Description	Approx. Weight (lb.)	List Price
ADDITIONAL HYDRAULIC OPTIONS				**Group 05**
	72533671M	Soft Drive Ride Control System	10	579.00
	72533672M	Third Function Valve with Deutsch Connector (Requires Wiring Harness 72533673M)	20	869.00
	72533673M	Wiring Harness for Third Function for MF4600	1	169.00
	72533848M	Four Coupler Kit to Convert 3/8-inch ISO A to 3/8-inch Flat Face (Dealer Installed Only)		No Charge
	72533849M	Four Coupler Kit to Convert 3/8-inch Flat Face to 3/8-inch ISO A (Dealer Installed Only)		No Charge
BUCKETS - OPTIONAL				**Group 06**
	72533683M	72-inch Skid Steer Material Bucket 180U, 17 cu ft	381	599.00
	72533684M	84-inch Skid Steer Material Bucket 210U, 19 cu ft	432	759.00
	72533688M	72-inch Skid Steer Material Bucket 185S, 17 cu ft	401	739.00
	72533689M	84-inch Skid Steer Material Bucket 210S, 19 cu ft	496	989.00
	72533685M	72-inch Euro Style Material Bucket 180U, 17 cu ft	381	659.00
	72533686M	84-inch Euro Style Material Bucket 210U, 19 cu ft	432	839.00
	72556222M	72-inch Euro Style Material Bucket 185S, 17 cu ft	401	819.00
	72556223M	84-inch Euro Style Material Bucket 210S, 19 cu ft	496	1,089.00
ATTACHMENTS - OPTIONAL				**Group 07**
		Skid Steer Style		
	72533692M	48-inch Pallet Fork - 3,520 lbs (1,600 kg) Capacity	425	1,189.00
	72533695M	Round Bale Spike	144	699.00
	72533697M	Big Bale Fork with Extension	288	1,029.00
		Euro Style		
	72556283M	48-inch Pallet Fork - 3,520 lbs (1,600 kg) Capacity	403	1,029.00
	72556073M	Round Bale Spike	144	683.00
	72556285M	Big Bale Fork with Extension	271	966.00
		Euro Style - Requires Third Function		
	72533698M	Uni-Grip 160	530	2,569.00
	72556264M	63-inch FlexiGrip 160 with Extension (for Round Bales)	610	2,741.00
ACCESSORIES - OPTIONAL				**Group 08**
	72533937M	72-inch Bolt-On Cutting Edge (Bucket will Require Drilling Unless Noted in Bucket Description, for Use with 180U Buckets)		210.00
	72533693M	Log Grab (Requires 48-inch Pallet Fork)	185	1,847.00
	72533694M	Hydraulic Fork Shift Kit for 48-inch Pallet Forks (Requires Third Function)	150	1,181.00
	72556121M	Bolt-On Utility Grapple (Only Compatible with 185S/210S Buckets, Bucket Requires Drilling)	440	2,189.00
	72556070M	Weld-On Hook Kit for Euro Tool Carrier	30	231.00

Note: 72530394M Dealer Installed Joystick and Mid Valves for use with MF4600 Series Tractors WITHOUT Factory Joystick and Mid Valves should now be sourced through Batavia Parts #7066112M98 **(Order separately from Loader)**

MF 926X LOADER

MECHANICAL SELF-LEVELING

(F.O.B. Telford, TN)

MASSEY FERGUSON®

FEATURES

- One Piece Main Frame with Tapered Arms and Single Cross Member
- Quick Attach Loader Frame Mount with Pin Lock
- Built-in Parking Stands
- (2) 2.4 inch (60mm) Double Acting Lift Cylinders
- (2) 2.6 inch (65mm) Double Acting, Equal Displacement Bucket Cylinders
- Hydraulic Lines Routed Inside Main Frame for Protection and Visibility
- Galvanized Steel Pins with Bushings at Key Points
- Recessed Grease Zerk Points
- Universal Skid Steer or Euro Hook Type Implement Attachments
- Grille Guard Standard
- Fits MF4607M T4F and MF4608 T4i 2wd and 4wd Tractor Models
- Rated on MF4608 Tractor with 9.5-24 Front Tires and 16.9-30 Rear Tires
- Powder Painted with Corrosion Protection
- Bucket Level Indicator
- Lift Capacity to Full Height @ 31.5 inches Forward of Pivot Pin: 2680 lbs
- Maximum Lift Height: 124 inches at Pivot
- Breakout Force: 3480 lbs
- Rated Hydraulic Pressure: 2828 PSI

Note: Tractors must be properly ballasted for loader operation. See Operator's Manual for information.

Note: Specifications may vary between tractor models, tires and hydraulic options.

Order Code	Catalog Number	Description	Approx. Weight (lb.)	List Price
For a Complete Loader, Select One Order Code from Group 01 through Group 04				
For Additional Hydraulics, Buckets and Accessories Order as Required From Groups 05 through 08				
BASE MACHINE				**Group 01**
XL26P1D 1A00MM	72533827	MF926X Base Loader - Skid Steer Style for MF4600M T4F	800	5,049.00
XL26P1D 8A00MM	72533828	MF926X Base Loader - Euro Style for MF4600M T4F	790	5,559.00
XL26P1D 1200MM	72533640	MF926X Base Loader - Skid Steer Style for MF4600 T4i	800	5,049.00
XL26P1D 8200MM	72533641	MF926X Base Loader - Euro Style for MF4600 T4i	790	5,559.00
SUBFRAME MOUNTING KIT				**Group 02**
	72533842M	Loader Uprights, Side Rails and Grille Guard for MF4600M **Non-Loader Provision** Tractors		1,990.00
	72533841M	Loader Uprights and Grille Guard for MF4600M **Loader Provision** Tractors		1,080.00
	72533658M	Subframe Kit for MF4608 Tier 4i Tractors	375	1,990.00
LIGHT RELOCATION KIT				**Group 03**
	72533750M	Light Relocation Kit for MF4600 Tier 4i **Cab** Tractors (**Required for ALL Cabs**)	15	30.00
HYDRAULICS				**Group 04**
	72533846M	Mid-Mount Hose Kit for MF4600M Tractors		301.00
	TBD	Joystick and Valve Kit required with Non-Loader Provision MF4600M Series Tractors		Order From Parts
	72533847M	Mid-Mount Hose Kit for MF4610LP Tractors (Includes Joystick Controller Support for Dealer Installed Valve Set)		331.00
	72533670M	Mid-Mount Hose Kit for MF4600 T4i Tractors	15	357.00

MF 926X LOADER

MECHANICAL SELF-LEVELING

Order Code	Catalog Number	Description	Approx. Weight (lb.)	List Price
ADDITIONAL HYDRAULIC OPTIONS				**Group 05**
	72533671M	Soft Drive Ride Control System	10	579.00
	72533672M	Third Function Valve with Deutsch Connector (Requires Wiring Harness 72533673M)	20	869.00
	72533673M	Wiring Harness for Third Function for MF4600	1	169.00
	72533848M	Four Coupler Kit to Convert 3/8-inch ISO A to 3/8-inch Flat Face (Dealer Installed Only)		No Charge
	72533849M	Four Coupler Kit to Convert 3/8-inch Flat Face to 3/8-inch ISO A (Dealer Installed Only)		No Charge

Note: 72530394M Dealer Installed Joystick and Mid Valves for use with MF4600 Series Tractors WITHOUT Factory Joystick and Mid Valves should now be sourced through Batavia Parts #7066112M98 **(Order separately from Loader)**

BUCKETS - OPTIONAL				**Group 06**
	72533683M	72-inch Skid Steer Material Bucket 180U, 17 cu ft	381	599.00
	72533684M	84-inch Skid Steer Material Bucket 210U, 19 cu ft	432	759.00
	72533688M	72-inch Skid Steer Material Bucket 185S, 17 cu ft	401	739.00
	72533689M	84-inch Skid Steer Material Bucket 210S, 19 cu ft	496	989.00
	72533685M	72-inch Euro Style Material Bucket 180U, 17 cu ft	381	659.00
	72533686M	84-inch Euro Style Material Bucket 210U, 19 cu ft	432	839.00
	72556222M	72-inch Euro Style Material Bucket 185S, 17 cu ft	401	819.00
	72556223M	84-inch Euro Style Material Bucket 210S, 19 cu ft	496	1,089.00
ATTACHMENTS - OPTIONAL				**Group 07**
		Skid Steer Style		
	72533692M	48-inch Pallet Fork - 3,520 lbs (1,600 kg) Capacity	425	1,189.00
	72533695M	Round Bale Spike	144	699.00
	72533697M	Big Bale Fork with Extension	288	1,029.00
		Euro Style		
	72556283M	48-inch Pallet Fork - 3,520 lbs (1,600 kg) Capacity	403	1,029.00
	72556073M	Round Bale Spike	144	683.00
	72556285M	Big Bale Fork with Extension	271	966.00
		Euro Style - Requires Third Function		
	72533698M	Uni-Grip 160	530	2,569.00
	72556264M	63-inch FlexiGrip 160 with Extension (for Round Bales)	610	2,741.00
ACCESSORIES - OPTIONAL				**Group 08**
	72533937M	72-inch Bolt-On Cutting Edge (Bucket will Require Drilling Unless Noted in Bucket Description, for Use with 180U Buckets)		210.00
	72533693M	Log Grab (Requires 48-inch Pallet Fork)	185	1,847.00
	72533694M	Hydraulic Fork Shift Kit for 48-inch Pallet Forks (Requires Third Function)	150	1,181.00
	72556121M	Bolt-On Utility Grapple (Only Compatible with 185S/210S Buckets, Bucket Requires Drilling)	440	2,189.00
	72556070M	Weld-On Hook Kit for Euro Tool Carrier	30	231.00

MF 931X LOADER

NON SELF-LEVELING

(F.O.B. Telford, TN)

MASSEY FERGUSON®

FEATURES

- One Piece Main Frame with Tapered Arms and Single Cross Member
- Quick Attach Loader Frame Mount with Pin Lock
- Built-in Parking Stands
- (2) 2.8 inch (70mm) Double Acting Lift Cylinders
- (2) 2.8 inch (70mm) Double Acting Bucket Cylinders
- Hydraulic Lines Routed Inside Main Frame for Protection and Visibility
- Galvanized Steel Pins with Bushings at Key Points
- Recessed Grease Zerk Points
- Universal Skid Steer or Euro Hook Type Implement Attachments
- Grille Guard Standard
- Fits MF4609M & MF4610M T4F; MF4609, MF4610, 4610LP T4i; and MF4700 Tractor Models
- Rated on MF4610 Tractor with 11.2-24 Front Tires and 16.9-30 Rear Tires
- Powder Painted with Corrosion Protection
- Bucket Level Indicator
- Lift Capacity to Full Height @ 31.5 inches Forward of Pivot Pin: 3020 lbs
- Maximum Lift Height: 136 inches at Pivot
- Breakout Force @ 31.5 inches Forward of Pivot Pin: 3540 lbs
- Rated Hydraulic Pressure: 2828 PSI
- Maximum Roll Back Angle: 50 Degrees
- Maximum Dump Angle: 44 Degrees

Note: Tractors must be properly ballasted for loader operation. See Operator's Manual for information.

Note: Specifications may vary between tractor models, tires and hydraulic options.

Order Code	Catalog Number	Description	Approx. Weight (lb.)	List Price
		For a Complete Loader, Select One Order Code from Group 01 through Group 04		
		For Additional Hydraulics, Buckets and Accessories Order as Required From Groups 05 through 09		
BASE MACHINE				**Group 01**
XL31N1D 1A00M	72533829	MF931X Base Loader - Skid Steer Style for MF4600M T4F and MF4700	775	4,318.00
XL31N1D 8A00M	72533830	MF931X Base Loader - Euro Style for MF4600M T4F and MF4700	760	4,888.00
XL31N1D 1200M	72533642	MF931X Base Loader - Skid Steer Style for MF4600 T4i	775	4,318.00
XL31N1D 8200M	72533643	MF931X Base Loader - Euro Style for MF4600 T4i	760	4,888.00
		Loader Provisioned 4700 Series Tractors Include the Factory Installed Loader Subframe Mounting Kit and Loader Joystick for the MF900 Series Loader. ◈ **Requires Hose Extension Kit to Complete.**		
		Loader Provisioned 4600M Series Tractors Include the Factory Installed Loader Side Rails, Joystick, and Mid-Mount Hose Kit. ◈ **Requires Loader Upright Kit to Complete.**		
SUBFRAME MOUNTING KIT				**Group 02**
	72533881M	Subframe and Grille Guard for MF4707 - 4710 Tractors (not for use on MF4707 Classic Platform)		1,320.00
	72533842M	Loader Uprights, Side Rails and Grille Guard for MF4600M **Non-Loader Provision** Tractors		1,990.00
	72533841M	Loader Uprights and Grille Guard for MF4600M **Loader Provision** Tractors		1,080.00
	72533658M	Subframe Kit for MF4609 and 4610 Tier 4i Tractors	375	1,990.00
LIGHT RELOCATION KIT				**Group 03**
	72533750M	Light Relocation Kit for MF4600 Tier 4i **Cab** Tractors (**Required for ALL Cabs**)	15	30.00

MF 931X LOADER

NON SELF-LEVELING

Order Code	Catalog Number	Description	Approx. Weight (lb.)	List Price
HYDRAULICS				**Group 04**
Non Loader Provisioned Tractors				
	72533882M	2 Function Mechanical Hydraulic Kit with Joystick for MF4700 Platform (Does Not Include 3rd Function Wiring Harness)		899.00
	72533940M	2 Function Mechanical Hydraulic Kit with Joystick for MF4700 Cab Tractors (Includes 3rd Function Wiring Harness)		1,129.00
	See Note	Joystick and Valve Kit for MF4600 Tier 4i, MF4600M T4F, . . for Tractors Without the Factory Installed Joystick		Order From Parts
		Note: 72530394M Dealer Installed Joystick and Mid Valves for use with MF4600 Series Tractors WITHOUT Factory Joystick and Mid Valves should now be sourced through Batavia, Part # 7066112M98		
	72533846M	Mid-Mount Hose Kit for MF4600M Tractors		301.00
	72533670M	Mid-Mount Hose Kit for MF4600 Tier 4i Tractors	15	357.00
	72533847M	Mid-Mount Hose Kit for MF4610LP Tractors (Includes Joystick Controller Support for Dealer Installed Valve Set)		331.00
Loader Provisioned Tractors				
	72533944M	Hose Extension Kit for MF4700 Series Platform Tractors with LL001		75.00
3RD FUNCTION OPTIONS				**Group 05**
	72533672M	Third Function Valve with Deutsch Connector (Requires a Wiring Harness below)	20	869.00
	72533885M	Wiring Harness and Button Kit for MF4700 Platform Tractors		230.00
	72533673M	Wiring Harness for Third Function for MF4600M	1	169.00
ADDITIONAL HYDRAULIC OPTIONS				**Group 06**
	72533671M	Soft Drive Ride Control System	10	579.00
	72533343M	4 Coupler Quick Release Single Lever for Loader Ready Factory Installed 2 Function Hydraulic Set		638.00
	72533848M	Four Coupler Kit to Convert 3/8-inch ISO A to 3/8-inch Flat Face (Dealer Installed Only)		No Charge
	72533849M	Four Coupler Kit to Convert 3/8-inch Flat Face to 3/8-inch ISO A (Dealer Installed Only)		No Charge

MF 931X LOADER

NON SELF-LEVELING

MASSEY FERGUSON®

Order Code	Catalog Number	Description	Approx. Weight (lb.)	List Price
BUCKETS - OPTIONAL				**Group 07**
	72533683M	72-inch Skid Steer Material Bucket 180U, 17 cu ft	381	599.00
	72533684M	84-inch Skid Steer Material Bucket 210U, 19 cu ft	432	759.00
	72533688M	72-inch Skid Steer Material Bucket 185S, 17 cu ft	401	739.00
	72533689M	84-inch Skid Steer Material Bucket 210S, 19 cu ft	496	989.00
	72533685M	72-inch Euro Style Material Bucket 180U, 17 cu ft	381	659.00
	72533686M	84-inch Euro Style Material Bucket 210U, 19 cu ft	432	839.00
	72556222M	72-inch Euro Style Material Bucket 185S, 17 cu ft	401	819.00
	72556223M	84-inch Euro Style Material Bucket 210S, 19 cu ft	496	1,089.00
ATTACHMENTS - OPTIONAL				**Group 08**
		Skid Steer Style		
	72533692M	48-inch Pallet Fork - 3,520 lbs (1,600 kg) Capacity	425	1,189.00
	72533695M	Round Bale Spike	144	699.00
	72533697M	Big Bale Fork with Extension	288	1,029.00
		Euro Style		
	72556283M	48-inch Pallet Fork - 3,520 lbs (1,600 kg) Capacity	403	1,029.00
	72556073M	Round Bale Spike	144	683.00
	72556285M	Big Bale Fork with Extension	271	966.00
		Euro Style - Requires Third Function		
	72533698M	Uni-Grip 160	530	2,569.00
	72556264M	63-inch FlexiGrip 160 with Extension (for Round Bales)	610	2,741.00
	72556265M	79" FlexiGrip 200 (for Round Bales)	686	2,974.00
ACCESSORIES - OPTIONAL				**Group 09**
	72533937M	72-inch Bolt-On Cutting Edge (Bucket will Require Drilling Unless Noted in Bucket Description, for Use with 180U Buckets)		210.00
	72533693M	Log Grab (Requires 48-inch Pallet Fork)	185	1,847.00
	72533694M	Hydraulic Fork Shift Kit for 48-inch Pallet Forks. (Requires Third Function)	150	1,181.00
	72556121M	Bolt-On Utility Grapple (Only Compatible with 185S/210S Buckets, Bucket Requires Drilling)	440	2,189.00
	72556070M	Weld-On Hook Kit for Euro Tool Carrier	30	231.00

MASSEY FERGUSON®

RESERVED

MF 936X LOADER

MECHANICAL SELF-LEVELING

(F.O.B. Telford, TN)

MASSEY FERGUSON®

FEATURES

- One Piece Main Frame with Tapered Arms and Single Cross Member
- Quick Attach Loader Frame Mount with Pin Lock
- Built-in Parking Stands
- (2) 2.6 inch (65mm) Double Acting Lift Cylinders
- (2) 2.8 inch (70mm) Double Acting, Equal Displacement Bucket Cylinders
- Hydraulic Lines Routed Inside Main Frame for Protection and Visibility
- Galvanized Steel Pins with Bushings at Key Points
- Recessed Grease Zerk Points
- Universal Skid Steer or Euro Hook Type Implement Attachments
- Grille Guard Standard)
- Fits MF4609M & MF4610M T4F; MF4609, MF4610, 4610LP T4i; and MF4700 Tractor Models
- Rated on MF4610 Tractor with 11.2-24 Front Tires and 16.9-30 Rear Tires
- Powder Painted with Corrosion Protection
- Bucket Level Indicator
- Lift Capacity to Full Height @ 31.5 inches Forward of Pivot Pin: 3430 lbs
- Maximum Lift Height: 136 inches at Pivot
- Breakout Force @ 31.5 inches Forward of Pivot Pin: : 3660 lbs
- Rated Hydraulic Pressure: 2828 PSI
- Maximum Roll Back Angle: 50 Degrees
- Maximum Dump Angle: 44 Degrees

Note: Tractors must be properly ballasted for loader operation. See Operator's Manual for information.

Note: Specifications may vary between tractor models, tires and hydraulic options.

Order Code	Catalog Number	Description	Approx. Weight (lb.)	List Price
		For a Complete Loader, Select One Order Code from Group 01 through Group 04		
		For Additional Hydraulics, Buckets and Accessories Order as Required From Groups 05 through 09		
BASE MACHINE				**Group 01**
XL36P1D 1A00MM	72533833	MF936X Base Loader - Skid Steer Style for MF4600M T4F and MF4700	920	5,068.00
XL36P1D 8A00MM	72533834	MF936X Base Loader - Euro Style for MF4600M T4F and MF4700	900	5,718.00
XL36P1D 1200MM	72533644	MF936X Base Loader - Skid Steer Style for MF4600 T4i	920	5,068.00
XL36P1D 8200MM	72533645	MF936X Base Loader - Euro Style for MF4600 T4i	900	5,718.00
		Loader Provisioned 4700 Series Tractors Include the Factory Installed Loader Subframe Mounting Kit and Loader Joystick for the MF900 Series Loader. ◈ **Requires Hose Extension Kit to Complete.**		
		Loader Provisioned 4600M Series Tractors Include the Factory Installed Loader Side Rails, Joystick, and Mid-Mount Hose Kit. ◈ **Requires Loader Upright Kit to Complete.**		
SUBFRAME MOUNTING KIT				**Group 02**
	72533881M	Subframe and Grille Guard for MF4707 - 4710 Tractors (not for use on MF4707 Classic Platform)		1,320.00
	72533842M	Loader Uprights, Side Rails and Grille Guard for MF4600M **Non-Loader Provision** Tractors		1,990.00
	72533841M	Loader Uprights and Grille Guard for MF4600M **Loader Provision** Tractors		1,080.00
	72533658M	Subframe Kit for MF4609 and 4610 Tier 4i Tractors	375	1,990.00

MF 936X LOADER

MECHANICAL SELF-LEVELING

Order Code	Catalog Number	Description	Approx. Weight (lb.)	List Price
LIGHT RELOCATION KIT				**Group 03**
	72533750M	Light Relocation Kit for MF4600 Tier 4i **Cab** Tractors (**Required for ALL Cabs**)	15	30.00
HYDRAULICS				**Group 04**
Non Loader Provisioned Tractors				
	72533882M	2 Function Mechanical Hydraulic Kit with Joystick for MF4700 Platform (Does Not Include 3rd Function Wiring Harness)		899.00
	72533940M	2 Function Mechanical Hydraulic Kit with Joystick for MF4700 Cab Tractors (Includes 3rd Function Wiring Harness)		1,129.00
	See Note	Joystick and Valve Kit for MF4600 Tier 4i, MF4600M T4F, . . for Tractors Without the Factory Installed Joystick		Order From Parts
		Note: 72530394M Dealer Installed Joystick and Mid Valves for use with MF4600 Series Tractors WITHOUT Factory Joystick and Mid Valves should now be sourced through Batavia, Part # 7066112M98		
	72533846M	Mid-Mount Hose Kit for MF4600M Tractors		301.00
	72533670M	Mid-Mount Hose Kit for MF4600 Tier 4i Tractors	15	357.00
	72533847M	Mid-Mount Hose Kit for MF4610LP Tractors (Includes Joystick Controller Support for Dealer Installed Valve Set)		331.00
Loader Provisioned Tractors				
	72533944M	Hose Extension Kit for MF4700 Series Platform Tractors with LL001		75.00
3RD FUNCTION OPTIONS				**Group 05**
	72533730M	Third Function Valve with Deutsch Connector (Requires a Wiring Harness below)	20	869.00
	72533885M	Wiring Harness and Button Kit for MF4700 Platform Tractors		230.00
	72533673M	Wiring Harness for Third Function for MF4600M	1	169.00
ADDITIONAL HYDRAULIC OPTIONS				**Group 06**
	72533671M	Soft Drive Ride Control System	10	579.00
	72533343M	4 Coupler Quick Release Single Lever for Loader Ready Factory Installed 2 Function Hydraulic Set		638.00
	72533848M	Four Coupler Kit to Convert 3/8-inch ISO A to 3/8-inch Flat Face (Dealer Installed Only)		No Charge
	72533849M	Four Coupler Kit to Convert 3/8-inch Flat Face to 3/8-inch ISO A (Dealer Installed Only)		No Charge

MF 936X LOADER

MECHANICAL SELF-LEVELING

MASSEY FERGUSON®

Order Code	Catalog Number	Description	Approx. Weight (lb.)	List Price
BUCKETS - OPTIONAL				**Group 07**
	72533683M	72-inch Skid Steer Material Bucket 180U, 17 cu ft	381	599.00
	72533684M	84-inch Skid Steer Material Bucket 210U, 19 cu ft	432	759.00
	72533688M	72-inch Skid Steer Material Bucket 185S, 17 cu ft	401	739.00
	72533689M	84-inch Skid Steer Material Bucket 210S, 19 cu ft	496	989.00
	72533685M	72-inch Euro Style Material Bucket 180U, 17 cu ft	381	659.00
	72533686M	84-inch Euro Style Material Bucket 210U, 19 cu ft	432	839.00
	72556222M	72-inch Euro Style Material Bucket 185S, 17 cu ft	401	819.00
	72556223M	84-inch Euro Style Material Bucket 210S, 19 cu ft	496	1,089.00
ATTACHMENTS - OPTIONAL				**Group 08**
		Skid Steer Style		
	72533692M	48-inch Pallet Fork - 3,520 lbs (1,600 kg) Capacity	425	1,189.00
	72533695M	Round Bale Spike	144	699.00
	72533697M	Big Bale Fork with Extension	288	1,029.00
		Euro Style		
	72556283M	48-inch Pallet Fork - 3,520 lbs (1,600 kg) Capacity	403	1,029.00
	72556073M	Round Bale Spike	144	683.00
	72556285M	Big Bale Fork with Extension	271	966.00
		Euro Style - Requires Third Function		
	72533698M	Uni-Grip 160	530	2,569.00
	72556264M	63-inch FlexiGrip 160 with Extension (for Round Bales)	610	2,741.00
ACCESSORIES - OPTIONAL				**Group 09**
	72533937M	72-inch Bolt-On Cutting Edge (Bucket will Require Drilling Unless Noted in Bucket Description, for Use with 180U Buckets)		210.00
	72533693M	Log Grab (Requires 48-inch Pallet Fork)	185	1,847.00
	72533694M	Hydraulic Fork Shift Kit for 48-inch Pallet Forks (Requires Third Function)	150	1,181.00
	72556121M	Bolt-On Utility Grapple (Only Compatible with 185S/210S Buckets, Bucket Requires Drilling)	440	2,189.00
	72556070M	Weld-On Hook Kit for Euro Tool Carrier	30	231.00

MASSEY FERGUSON®

RESERVED

MF 931 / MF 936 LOADERS

NON SELF-LEVELING / MECHANICAL SELF-LEVELING

MASSEY FERGUSON®

(F.O.B. Alliston, Ontario or Telford, Tennessee)

FEATURES

- One Piece Main Frame Arms and Compression Molded Curved Cross Member
- Quick Attach Implement Mounting with Euro Style Single Lever Locking System
- 4 mm High Tensile, Tapered Box Section Frame
- 70 mm Arm Profile
- 70 mm Double Acting Lift Cylinders **(MF931)**
- 65 mm Double Acting Lift Cylinders **(MF936)**
- 75 mm Double Acting Bucket Cylinders **(MF 931)**
- 75 mm Double Acting, Equal Displacement Bucket Cylinders **(MF 936)**
- Industrial Grade Hydraulic Fittings and Hoses, Incorporated Internally Inside Loader Boom
- Central Valve, Equalized Oil Distribution Valve with Incorporated Relief Valves
- 4-Flat Face Hydraulic Tips on Boom and Bucket Circuits
- Protective Hose Cover
- Compatible with 4700 Global Series
- Compatible with 5609, 5610
- Lock and Go Loader/Subframe Connection System
- Pivots Are Greasable and Include Industrial Grade Pins and Bushings
- Powder Painted with Corrosion Protection
- Bucket Level Indicator
- Front Bumper Guard (With Subframe Set)
- Buckets Have Heavy Duty, Welded-On Cutting Edge, Box Beam Section for Stiffness and Torsional Rigidity and Lateral Reinforcing Bars
- 138" (3.50 m) Lift Height to Pivot Pin
- **MF 931:** 2690 lb. (1220 kg) Lift Capacity to Full Height, 31.5" (800 mm) Forward of Pivot Pin per ASABE 301.3 @ 2828 PSI
- **MF 936:** 2888 lb. (1310 kg) Lift Capacity to Full Height, 31.5" (800 mm) Forward of Pivot Pin per ASABE 301.3 @ 2828 PSI
- Maximum Roll Back Angle: 44 Degrees
- Maximum Dump Angle: 58 Degrees

TRACTORS MUST BE PROPERLY BALLASTED FOR LOADER OPERATION. SEE OPERATOR'S MANUAL

NOTE: SPECIFICATIONS MAY VARY BETWEEN MODELS, TIRE EQUIPMENT AND HYDRAULIC OPTIONS

IMPORTANT NOTE: Field Installed LCS Joystick is very different from the factory installed multi-function loader joystick, and will have limited capabilities comparably.

FOR MORE INFORMATION ON FIELD INSTALLED LOADER OPTIONS SEE PAGE 57

Order Code	Catalog Number	Description	Approx. Weight (lb.)	List Price
BASE MACHINE - REQUIRED				**Group 01**
MF931	72533509	MF931 Base Loader	992	4,435.00
MF936	72533876	MF936 Base Loader	860	5,185.00
		Loader Ready or Loader Provisioned Tractors Include the Factory Installed Loader Subframe Mounting Kit and Loader Joystick for the MF900 Series Loader. Order the Base Loader Above (with Hose Extension Kit for Platform) and Buckets or Attachments to Complete the Loader.		
DEALER INSTALLED SUBFRAME MOUNTING KITS				**Group 02**
	72533881M	Subframe and Grille Guard for MF4707 - 4710 Global Series Tractors (not for use on MF4707 Classic Platform)		1,320.00
	72533520M	Subframe Kit For MF5609, 5610 Dyna-4, Classic Edition (Tractors without Front Hitch)	925	2,154.00

Order Code	Catalog Number	Description	Approx. Weight (lb.)	List Price
DEALER INSTALLED 2 FUNCTION OPTIONS				**Group 03**
Non Loader Provisioned Tractors				
	72533882M	2 Function Mechanical Hydraulic Kit with Joystick for **MF4700 Platform** Global Series Tractors (Does Not Include 3rd Function Wiring Harness)		899.00
	72533940M	2 Function Mechanical Hydraulic Kit with Joystick for **MF4700 Cab** Global Series Tractors (Includes 3rd Function Wiring Harness)		1,129.00
	72533596M	2 Function LCS Mechanical Cable Controlled Joystick, Open Center, for **MF5609, MF5610** Classic Edition		1,450.00
	72533549M	Standard Hose Set for **MF5609, MF5610** (No Joystick, Uses Tractor Remotes)		515.00
Non Loader Provisioned Tractors				
	72533944M	Hose Extension Kit for **MF4700 Platform** Global Series Tractors with LL001		75.00
3RD FUNCTION OPTIONS				**Group 04**
	72556254M	3rd Function Electric Diverter Valve for Dealer Installed Loader Hydraulics or Loader Ready Tractors (Does not require Live 3rd Function Hose Kit) (for use with **MF4700 and MF5600** Series)		823.00
	72533885M	Wiring Harness and Button Kit for **MF4700 Platform** Global Series Tractors (Required for 3rd Function)		230.00
HYDRAULIC OPTIONS				**Group 05**
		Only Compatible with Factory Installed Loader Ready Hydraulic Service Sets		
	72533343M	4 Coupler Quick Release Single Lever for Loader Ready Factory Installed 2 Function Hydraulic Set (for use with **MF4700 and MF5600** Series)		638.00
		Compatible with Dealer Installed LCS Hydraulic Service Sets		
	72533573M	MC4 Multicoupler, 4 Coupler Quick Release for Dealer Installed LCS Hydraulic Sets (for use with **MF5600** Series)		618.00
ADDITIONAL HYDRAULIC OPTIONS				**Group 06**
		Compatible with Factory and Dealer Installed Hydraulic Service Sets		
	72533566M	Soft Drive Ride Control System		729.00
	72533570M	Soft Drive Electric Shutoff Kit Compatible with Soft Drive Control System above		420.00
	72533571M	Hydraulic Implement Locking Set (Requires 3rd Function to Operate)		597.00
	72533576M	Selecto Fix Loader Part Flat Face Quick Release System for Hydraulic Implements (Requires 3rd Function)		551.00
	72533577M	Selecto Fix Implement Part Flat Face Quick Release System for Hydraulic Implements One Required with each Hydraulic Implement (Required with Selecto Fix Loader Part)		313.00

Order Code	Catalog Number	Description	Approx. Weight (lb.)	List Price
BUCKETS - OPTIONAL				**Group 07**
	72556223M	83-inch Material Bucket 210S, 19 cu ft (0.70 cu yd)	496	1,089.00
	72556037M	73" Material Bucket 185H, 25 cu ft (0.92 cu yd)	452	1,221.00
	72556038M	83" Material Bucket 210H, 24 cu ft (0.89 cu yd)	556	1,372.00
	72556041M	73" Heavy Duty Material Bucket 185HD, 25 cu ft (0.92 cu yd)	518	1,444.00
	72556042M	83" Heavy Duty Material Bucket 210HD, 29 cu ft (1.07 cu yds)	628	1,639.00
	72556046M	63" Construction Tooth Bucket 160HT, 23 cu ft (0.85 cu yd)	379	1,374.00
	72556047M	73" Construction Tooth Bucket 185HT, 25 cu ft (0.92 cu yd)	465	1,517.00
	72556049M	79" Light Material High Volume Bucket 200HV, 40 cu ft (1.48 cu yds)	602	1,545.00
	72556050M	87" Light Material High Volume Bucket 220HV, 44 cu ft (1.63 cu yds)	648	1,930.00
	72556261M	83" Heavy Duty High Volume Bucket 210HDV, 53 cu ft (1.96 cu yds)	917	2,218.00
ATTACHMENTS - OPTIONAL				**Group 08**
	72556073M	Round Bale Spike	132	683.00
	72556285M	Big Bale Fork with Extension	273	966.00
	72556283M	48-inch Pallet Fork - 3,520 lbs (1,600 kg) Capacity	353	1,029.00
	72556284M	48-inch Pallet Fork - 5,500 lbs (2,500 kg) Capacity	375	1,208.00
	72556114M	59-inch Wide (150 cm) Stone Fork	475	2,244.00
	72556115M	79-inch Wide (200 cm) Stone Fork	589	2,838.00
		Requires Third Function		
	72556264M	63-inch FlexiGrip 160 with Extension (for Round Bales)	610	2,741.00
	72556058M	92-inch QuadroGrip 200 (for Round or Square Bales)	916	4,542.00
ACCESSORIES - OPTIONAL				**Group 09**
	72533693M	Log Grab (Requires 48-inch Pallet Fork) (Requires 3rd Function)	187	1,847.00
	72533694M	Hydraulic Fork Shift Kit for 48-inch Pallet Forks (Requires 3rd Function)	165	1,181.00
	72556070M	Weld-On Hook Set - (to Adapt Attachments)	30	231.00
	72556069M	Counterweight - 3-Point Hitch (Empty)	276	1,018.00
	72533580M	French Language Package (Manual and Decal Kit)		No Charge

MASSEY FERGUSON®

RESERVED

MF 941X / MF 946X LOADERS

NON SELF-LEVELING / MECHANICAL SELF-LEVELING

MASSEY FERGUSON®

(F.O.B. Telford, TN)

FEATURES

- One Piece Main Frame with Tapered Arms and Single Cross Member
- Quick Attach Loader Frame Mount with Pin Lock and Built in Parking Stands
- Quick Attach Implement Mounting with Euro Style Single Lever Locking System
- 75 mm Double Acting Lift Cylinders **(MF941X)**
- 70 mm Double Acting Lift Cylinders **(MF946X)**
- 75 mm Double Acting Bucket Cylinders **(MF941X)**
- 75 mm Double Acting Bucket Cylinders, Equal Displacement **(MF946X)**
- Hydraulic Lines Routed Inside Main Frame for Protection and Visibility
- Pivots have Recessed Greasable Galvanized Steel Pins with Bushings at Key Points
- 4-Flat Face Hydraulic Tips on Boom and Bucket Circuits
- Protective Hose Sheath
- Compatible with MF5700 and MF6700 Global Series Tractors
- Powder Painted with Corrosion Protection
- Bucket Level Indicator
- Maximum Lift Height 148" (3.75 m) at Pivot Pin
- **MF941X**: 2220 lb. (1010 kg) Lift Capacity to Full Height, 31.5",(800 mm) Forward of Pivot Pin per ASABE 301.3 @ 2828 PSI
- **MF946X**: 3500 lb. (1590 kg) Lift Capacity to Full Height, 31.5", (800 mm) Forward of Pivot Pin per ASABE 301.3 @ 2828 PSI
- Maximum Roll Back Angle: 49 Degrees
- Maximum Dump Angle: 42 Degrees
- Grille Guard Standard

TRACTORS MUST BE PROPERLY BALLASTED FOR LOADER OPERATION. SEE OPERATOR'S MANUAL

NOTE: SPECIFICATIONS MAY VARY BETWEEN MODELS, TIRE EQUIPMENT AND HYDRAULIC OPTIONS

FOR MORE INFORMATION ON FIELD INSTALLED LOADER OPTIONS SEE PAGE 57

Order Code	Catalog Number	Description	Approx. Weight (lb.)	List Price
BASE MACHINE - REQUIRED				**Group 01**
MF941X	72533899	MF941X Base Loader, Non Self-Leveling	1135	5,100.00
MF946X	72533892	MF946X Base Loader, Mechanical Self-Leveling	1290	5,955.00
		Loader Ready Tractors Include the Factory Installed Loader Subframe Mounting Kit and Loader Joystick and Valve for the MF900X Series Loader. Order the Base Loader Above and Options and Attachments to Complete the Loader.		
DEALER INSTALLED SUBFRAME MOUNTING KITS				**Group 02**
	72533895M	Subframe Kit for MF6700 Global Series Tractors Includes Grille Guard		2,580.00
	72533941M	Subframe Kit for MF5700 Global Series Tractors Includes Grille Guard		2,580.00

Order Code	Catalog Number	Description	Approx. Weight (lb.)	List Price
DEALER INSTALLED 2 FUNCTION OPTIONS				**Group 03**
Non Loader Provisioned Tractors				
	72533942M	2 Function Mechanical Hydraulic Kit with Joystick and Valve for MF5700 and MF6700 Global Series **Platform** (Does Not Include 3rd Function Wiring Harness)		1,680.00
	72533943M	2 Function Mechanical Hydraulic Kit with Joystick and Valve for MF5700 and MF6700 Global Series **Cab** (Includes 3rd Function Wiring Harness)		1,760.00
Loader Provisioned Tractors				
	72533944M	Hose Extension Kit for MF5700 and MF6700 Global Series Required for Platform Tractors with LL001		75.00
3RD FUNCTION OPTIONS				**Group 04**
	72533672M	Third Function Valve with Deutsch Connector (Requires Wiring Harness below) **(MF941X)**	20	869.00
	72533730M	Third Function Valve with Deutsch Connector (Requires Wiring Harness below) **(MF946X)**	20	869.00
	72533885M	Wiring Harness and Button Kit for **MF5700 and MF6700 Platform** Global Series Tractors (Required for 3rd Function)		230.00
HYDRAULIC OPTIONS				**Group 05**
	Only Compatible with Factory Installed Loader Ready Hydraulic Service Sets			
	72533343M	4 Coupler Quick Release Single Lever for Loader Ready Factory Installed 2 Function Hydraulic Set		638.00
ADDITIONAL HYDRAULIC OPTIONS				**Group 06**
	Compatible with Factory and Dealer Installed Hydraulic Service Sets			
	72533671M	Soft Drive Ride Control System	10	579.00

MF 941X / MF 946X LOADERS

NON SELF-LEVELING / MECHANICAL SELF-LEVELING

MASSEY FERGUSON®

Order Code	Catalog Number	Description	Approx. Weight (lb.)	List Price
BUCKETS - OPTIONAL				**Group 07**
		Euro Style		
	72556223M	83-inch Material Bucket 210S, 19 cu ft (0.70 cu yds)	496	1,089.00
	72556038M	83-inch Material Bucket 210H, 24 cu ft (0.89 cu yds)	556	1,372.00
	72556039M	95-inch Material Bucket 240H, 28 cu ft (1.04 cu yds)	648	1,851.00
ATTACHMENTS - OPTIONAL				**Group 08**
		Euro Style		
	72556073M	Round Bale Spike	144	683.00
	72556285M	Big Bale Fork with Extension	271	966.00
	72556283M	48-inch Pallet Fork - 3,520 lbs (1,600 kg) Capacity	403	1,029.00
	72556114M	59-inch Wide (150 cm) Stone Fork	475	2,244.00
	72556115M	79-inch Wide (200 cm) Stone Fork	589	2,838.00
		Euro Style - Requires Third Function		
	72533698M	Uni-Grip 160	530	2,569.00
	72556264M	63-inch FlexiGrip 160 with Extension (for Round Bales)	610	2,741.00
	72533693M	Log Grab (Requires 48-inch Pallet Fork)	187	1,847.00
	72533694M	Hydraulic Fork Shift Kit for 48-inch Pallet Forks	165	1,181.00
ACCESSORIES - OPTIONAL				
	72556121M	Bolt-On Utility Grapple (Only Compatible with 185S/210S Buckets, Bucket Requires Drilling)	440	2,189.00
	72556070M	Weld-On Hook Set - (to Adapt Attachments)	30	231.00
	72556069M	Counterweight - 3-Point Hitch (Empty)	276	1,018.00
	TBD	French Language Package (Manual and Decal Kit)		No Charge

MF 941 / MF 946 LOADERS

NON SELF-LEVELING / MECHANICAL SELF-LEVELING

MASSEY FERGUSON®

(F.O.B. Telford, TN with Distribution Center in Alliston, Ontario)

FEATURES

- One Piece Main Frame Arms and Compression Molded Curved Cross Member
- Quick Attach Implement Mounting with Euro Style Single Lever Locking System
- 5 mm High Tensile, Tapered Box Section Frame
- 70 mm Arm Profile
- 80 mm Double Acting Lift Cylinders **(MF941)**
- 75 mm Double Acting Lift Cylinders **(MF946)**
- 80 mm Double Acting Bucket Cylinders **(MF 941)**
- 80 mm Double Acting, Equal Displacement Bucket Cylinders **(MF 946)**
- Industrial Grade Hydraulic Fittings and Hoses, Incorporated Internally Inside Loader Boom
- Central Valve, Equalized Oil Distribution Valve with Incorporated Relief Valves
- 4-Flat Face Hydraulic Tips on Boom and Bucket Circuits
- Protective Hose Cover
- Compatible with MF5700SL Series, MF5600 Series, MF5700 and MF6700 Global Series Tractors
- Lock and Go Loader / Subframe Connection System
- Pivots Are Greasable and Include Industrial Grade Pins and Bushings
- Powder Painted with Corrosion Protection
- Bucket Level Indicator
- Front Bumper Guard (With Subframe Set)
- Buckets Have Heavy Duty, Welded-On Cutting Edge, Box Beam Section for Stiffness and Torsional Rigidity and Lateral Reinforcing Bars
- 148" (3.75 m) Lift Height to Pivot Pin
- **MF 941**: 3307 lb. (1500 kg) Lift Capacity to Full Height, 31.5",(800 mm) Forward of Pivot Pin per ASABE 301.3 @ 2828 PSI
- **MF 946**: 3593 lb. (1630 kg) Lift Capacity to Full Height, 31.5", (800 mm) Forward of Pivot Pin per ASABE 301.3 @ 2828 PSI
- Maximum Roll Back Angle: 43 Degrees
- Maximum Dump Angle: 60 Degrees

TRACTORS MUST BE PROPERLY BALLASTED FOR LOADER OPERATION. SEE OPERATOR'S MANUAL

NOTE: SPECIFICATIONS MAY VARY BETWEEN MODELS, TIRE EQUIPMENT AND HYDRAULIC OPTIONS

IMPORTANT NOTE: Field Installed LCS Joystick is very different from the factory installed multi-function loader joystick, and will have limited capabilities comparably.

FOR MORE INFORMATION ON FIELD INSTALLED LOADER OPTIONS SEE PAGE 57

Order Code	Catalog Number	Description	Approx. Weight (lb.)	List Price
BASE MACHINE - REQUIRED				**Group 01**
MF941	72533501	MF941 Base Loader, Non Self-Leveling	1135	5,667.00
MF946	72533504	MF946 Base Loader, Mechanical Self-Leveling	1290	7,798.00
		Loader Ready Tractors Include the Factory Installed Loader Subframe Mounting Kit and Loader Joystick for the MF900 Series Loader. Order the Base Loader Above, Options and Attachments to Complete the Loader.		
DEALER INSTALLED SUBFRAME MOUNTING KITS				**Group 02**
	72533895M	Subframe Kit for MF6700 Global Series Tractors Includes Grille Guard		2,580.00
	72533941M	Subframe Kit for MF5700 Global Series Tractors Includes Grille Guard		2,580.00
	72533919M	Subframe Kit for MF5700SL Series Tractors and MF5611, 5612, 5613 Large Frame Editions Only Compatible without Front 3-Point Hitch		3,242.00
	72533520M	Subframe Kit for MF5609, 5610 Small Frame Editions Only Compatible without Front 3-Point Hitch	925	2,154.00

Order Code	Catalog Number	Description	Approx. Weight (lb.)	List Price
DEALER INSTALLED 2 FUNCTION OPTIONS				**Group 03**
	72533596M	2 Function **LCS** Mechanical Cable Controlled Joystick,. . . . . **Open Center**, for 5609, 5610 Classic Edition		1,450.00
	72533721M	2 Function **LCS** Mechanical Cable Controlled Joystick,. . . . . **Open Center**, for 5711SL, 5712SL, 5713SL and for 5611, 5612, 5613 Classic Editions		1,450.00
	72533723M	2 Function **LCS** Mechanical Cable Controlled Joystick,. . . . . **Closed Center** Load Sensing, for 5711SL, 5712SL, 5713SL and for 5611, 5612, 5613 Classic Editions		1,450.00
	72533725M	2 Function **LCS** Electric Controlled Joystick, ... **Open Center**, for 5711SL, 5712SL, 5713SL and for MF5600 Series Deluxe Editions		3,349.00
	72533727M	2 Function **LCS** Electric Controlled Joystick, ... **Closed Center** Load Sensing, for 5711SL, 5712SL, 5713SL and for MF5600 Series Deluxe Editions		3,349.00
	72533549M	Standard Hose Set (No Joystick, Uses Tractor Remotes)		515.00
Non Loader Provisioned Tractors				
	72533942M	2 Function Mechanical Hydraulic Kit with Joystick . . . . . and Valve for MF5700 and MF6700 **Platform** Global Series (Does Not Include 3rd Function Wiring Harness)		1,680.00
	72533943M	2 Function Mechanical Hydraulic Kit with Joystick . . . . . and Valve for MF5700 and MF6700 **Cab** Global Series Tractors (Includes 3rd Function Wiring Harness)		1,760.00
Loader Provisioned Tractors				
	72533944M	Hose Extension Kit for MF5700 andMF6700 Global Series . . . . . Required for Platform Tractors with LL001		75.00
3RD FUNCTION OPTIONS				**Group 04**
	72533622M	Live 3rd Function for use with Dealer Installed . . . . . 2 Function **LCS** Mechanical Cable Controlled Joystick (Requires Live 3rd Function Hose Kit for Loader Boom)		960.00
	72533621M	Live 3rd Function for use with Dealer Installed . . . . . 2 Function **LCS** Electric Controlled Joystick (Requires Live 3rd Function Hose Kit for Loader Boom)		960.00
	72556254M	3rd Function Electric Diverter Valve for Dealer . . . . . Installed Loader Hydraulics or Loader Ready Tractors (Does not require Live 3rd Function Hose Kit)		823.00
	72533558M	Live 3rd Function Hose Kit for use with 72533622M . . . . . or 72533621M for Loader Boom with Flat Face Couplers		320.00
	72533885M	Wiring Harness and Button Kit for **MF5700 . . . . . and MF6700 Platform** Global Series Tractors (Required for 3rd Function)		230.00

MF 941 / MF 946 LOADERS

NON SELF-LEVELING / MECHANICAL SELF-LEVELING

Order Code	Catalog Number	Description	Approx. Weight (lb.)	List Price
HYDRAULIC OPTIONS				**Group 06**
		Only Compatible with Factory Installed Loader Ready Hydraulic Service Sets		
	72533343M	4 Coupler Quick Release Single Lever for Loader Ready Factory Installed 2 Function Hydraulic Set		638.00
		Compatible with Dealer Installed LCS Hydraulic Service Sets		
	72533573M	MC4 Multicoupler, 4 Coupler Quick Release for Dealer Installed LCS Hydraulic Sets		618.00
	72533575M	MC2 Multicoupler, 2 Coupler Quick Release for LCS Live 3rd Hydraulic Sets (Requires MC4 Multicoupler)		526.00
ADDITIONAL HYDRAULIC OPTIONS				**Group 07**
		Compatible with Factory and Dealer Installed Hydraulic Service Sets		
	72533566M	Soft Drive Ride Control System		729.00
	72533570M	Soft Drive Electric Shutoff Kit Compatible with Soft Drive Control System above		420.00
	72533571M	Hydraulic Implement Locking Set (Requires 3rd Function to Operate)		597.00
	72533576M	Selecto Fix Loader Part Flat Face Quick Release System for Hydraulic Implements (Requires 3rd Function)		551.00
	72533577M	Selecto Fix Implement Part Flat Face Quick Release System for Hydraulic Implements One Required with each Hydraulic Implement (Required with Selecto Fix Loader Part)		313.00
BUCKETS - OPTIONAL				**Group 05**
	72556223M	83" Material Bucket 210S, 19 cu ft (0.70 cu yds)	496	1,089.00
	72556037M	73" Material Bucket 185H, 25 cu ft (0.92 cu yd)	452	1,221.00
	72556038M	83" Material Bucket 210H, 24 cu ft (0.89 cu yds)	556	1,372.00
	72556039M	95" Material Bucket 240H, 28 cu ft (1.04 cu yds)	648	1,851.00
	72556041M	73" Heavy Duty Material Bucket 185HD, 25 cu ft (0.92 cu yd)	518	1,444.00
	72556042M	83" Heavy Duty Material Bucket 210HD, 29 cu ft (1.07 cu yds)	628	1,639.00
	72556043M	95" Heavy Duty Material Bucket 240HD, 34 cu ft (1.26 cu yds)	750	2,269.00
	72556046M	63" Construction Tooth Bucket 160HT, 23 cu ft (0.85 cu yd)	379	1,374.00
	72556047M	73" Construction Tooth Bucket 185HT, 25 cu ft (0.92 cu yd)	465	1,517.00
	72556048M	83" Construction Tooth Bucket 210HT, 29 cu ft (1.07 cu yds)	571	1,743.00
	72556049M	79" Light Material High Volume Bucket 200HV, 40 cu ft (1.48 cu yds)	602	1,545.00
	72556050M	87" Light Material High Volume Bucket 220HV, 44 cu ft (1.63 cu yds)	648	1,930.00
	72556261M	83" Heavy Duty High Volume Bucket 210HDV, 53 cu ft (1.96 cu yds)	917	2,218.00

MF 941 / MF 946 LOADERS

NON SELF-LEVELING / MECHANICAL SELF-LEVELING

MASSEY FERGUSON®

Order Code	Catalog Number	Description	Approx. Weight (lb.)	List Price
ATTACHMENTS - OPTIONAL				
	72556073M	Round Bale Spike	132	683.00
	72556285M	Big Bale Fork with Extension	273	966.00
	72556108M	83" Maxi-Grapple -210T (Tine Bucket)	1367	5,578.00
	72556111M	83" Maxi-Grapple -210 (Standard Bucket)	1334	5,422.00
	72556284M	48” Pallet Fork - 5,500 lbs (2,500 kg) Capacity	375	1,208.00
	72556114M	59" Wide (150 cm) Stone Fork	475	2,244.00
	72556115M	79" Wide (200 cm) Stone Fork	589	2,838.00
	72556264M	63" FlexiGrip 160 (for Round Bales) (Requires 3rd Function)	607	2,741.00
	72556265M	79" FlexiGrip 200 (for Round Bales) (Requires 3rd Function)	686	2,974.00
	72556058M	92" QuadroGrip 200 (for Round or Square Bales) (Requires 3rd Function)	916	4,542.00
	72533698M	Uni-Grip 160 (Requires 3rd Function)	530	2,569.00
	72533693M	Log Grab (Requires 48-inch Pallet Fork) (Requires 3rd Function)	187	1,847.00
	72533694M	Hydraulic Fork Shift Kit for 48-inch Pallet Forks (Requires 3rd Function)	165	1,181.00
ACCESSORIES - OPTIONAL				
	72556118M	Back Screen for Maxi Grapple	45	328.00
	72556121M	Bolt-On Utility Grapple (Only Compatible with 185S/210S Buckets, Bucket Requires Drilling)	440	2,189.00
	72556070M	Weld-On Hook Set - (to Adapt Attachments)	30	231.00
	72556069M	Counterweight - 3-Point Hitch (Empty)	276	1,018.00
	72533580M	French Language Package (Manual and Decal Kit)		No Charge

MF 951 / MF 958 LOADERS

NON SELF-LEVELING / MECHANICAL SELF-LEVELING

MASSEY FERGUSON®

(F.O.B. Telford, TN with Distribution Center in Alliston, Ontario)

FEATURES

- One Piece Main Frame Arms and Compression Molded Curved Cross Member
- Quick Attach Implement Mounting with Euro Style Single Lever Locking System
- 5 mm High Tensile, Tapered Box Section Frame
- 70 mm Arm Profile
- 85 mm Double Acting Lift Cylinders **(MF951)**
- 85 mm Double Acting Lift Cylinders **(MF958)**
- 80 mm Double Acting Bucket Cylinders **(MF951)**
- 90 mm Double Acting, Equal Displacement Bucket Cylinders **(MF958)**
- Industrial Grade Hydraulic Fittings and Hoses, Incorporated Internally Inside Loader Boom
- Central Valve, Equalized Oil Distribution Valve with Incorporated Relief Valves
- 4-Flat Face Hydraulic Tips on Boom and Bucket Circuits
- Protective Hose Cover
- Pivots are Greaseable and Include Industrial Grade Pins and Bushings
- Compatible with MF6614, 6615 and 6616
- Lock and Go Loader / Subframe Connection System
- Powder Painted with Corrosion Protection
- Bucket Level Indicator
- Front Bumper Guard (with Subframe Set)
- Buckets Have Heavy Duty, Welded-On Cutting Edge, Box Beam Section for Stiffness and Torsional Rigidity and Lateral Reinforcing Bars
- 157" (4.0 m) Lift Height to Pivot Pin
- **MF951**: 3616 lb. (1640 kg) Lift Capacity to Full Height, 31.5" (800 mm) Forward of Pivot Pin per ASABE 301.3 @ 2828 PSI
- **MF958**: 4431 lb. (2010 kg) Lift Capacity to Full Height, 31.5" (800 mm) Forward of Pivot Pin per ASABE 301.3 @ 2828 PSI
- **MF951:**
- Maximum Roll Back Angle: 46 Degrees
- Maximum Dump Angle: 56 Degrees
- **MF958:**
- Maximum Roll Back Angle: 45 Degrees
- Maximum Dump Angle: 55 Degrees

TRACTORS MUST BE PROPERLY BALLASTED FOR LOADER OPERATION. SEE OPERATOR'S MANUAL

NOTE: SPECIFICATIONS MAY VARY BETWEEN MODELS, TIRE EQUIPMENT AND HYDRAULIC OPTIONS

IMPORTANT NOTE: Field Installed LCS Joystick is very different from the factory installed multi-function loader joystick, and will have limited capabilities comparably.

NOTE: Front Fenders Positioned at Narrow Tread Settings may Interfere with the Loader Lift Cylinders

FOR MORE INFORMATION ON FIELD INSTALLED LOADER OPTIONS SEE PAGE 57

Order Code	Catalog Number	Description	Approx. Weight (lb.)	List Price
BASE MACHINE - REQUIRED				**Group 01**
MF951	72533502	MF951 Base Loader, Non Self-Leveling	1221	6,390.00
MF958	72533917	MF958 Base Loader, Mechanical Self-Leveling	1369	9,545.00
		Loader Ready Tractors Include the Factory Installed Loader Subframe Mounting Kit and Loader Joystick for the MF900 Series Loader. Order the Base Loader Above, Options and Attachments to Complete the Loader.		
DEALER INSTALLED SUBFRAME MOUNTING KITS				**Group 02**
Choose One	72533920M	Subframe Kit for MF6614, 6615, 6616 Dyna-4 or Dyna-6, Classic, Deluxe or Premium Editions (Tractors without Front Hitch)		3,242.00
	72533921M	Subframe Kit for MF6615, 6616. Dyna-VT, Deluxe or Premium Editions (Tractors without Front Hitch)		3,242.00

Order Code	Catalog Number	Description	Approx. Weight (lb.)	List Price
DEALER INSTALLED 2 FUNCTION OPTIONS				**Group 03**
	72533601M	2 Function LCS Mechanical Cable Controlled Joystick, **Open Center**, for MF6615, 6616, Dyna-4 or Dyna-6, Classic Edition		1,450.00
	◆72533603M	2 Function LCS Mechanical Cable Controlled Joystick, **Closed Center** Load Sensing, for MF6615, 6616, Dyna-4 or Dyna-6, Classic Edition		1,450.00
	◆72533605M	2 Function LCS Electric Controlled Joystick, **Closed Center** Load Sensing, for MF6614, 6615, 6616, Dyna-6, Deluxe or Premium Editions		3,349.00
	72533549M	Standard 2 Function Hose Set (No Joystick, Uses Tractor Remotes)		515.00

◆ **Requires 4313756M91 and 3796801M1 from AGCO Parts to complete hydraulic connection only for Dyna-4 or Dyna-6 with Closed Center Load Sensing**

3RD FUNCTION OPTIONS				**Group 04**
	72533622M	Live 3rd Function for use with Dealer Installed 2 Function LCS Mechanical Cable Controlled Joystick (Requires Live 3rd Function Hose Kit for Loader Boom)		960.00
	72533621M	Live 3rd Function for use with Dealer Installed 2 Function LCS Electric Controlled Joystick (Requires Live 3rd Function Hose Kit for Loader Boom)		960.00
	72533359M	Dealer Installed Live 3rd Set for use with Loader Ready Tractors with 2 Function Load Sensing Cable Operated Hydraulic Set (for Classic Editions MF6600 and MF7600) (Requires Live 3rd Function Hose Kit for Loader Boom)		1,048.00
	72556254M	3rd Function Electric Diverter Valve for Dealer Installed Loader Hydraulics or Loader Ready Tractors (Does not require Live 3rd Function Hose Kit)		823.00
	72533558M	Live 3rd Function Hose Kit for use with 72533622M, 72533621M, or 72533359M, for Loader Boom with Flat Face Couplers		320.00

Order Code	Catalog Number	Description	Approx. Weight (lb.)	List Price
HYDRAULIC OPTIONS				**Group 06**
		Only Compatible with Factory Installed Loader Ready Hydraulic Service Sets		
	72533343M	4 Coupler Quick Release Single Lever for Loader Ready Factory Installed 2 Function Hydraulic Set		638.00
	72533344M	6 Coupler Quick Release Single Lever Compatible when adding a Dealer Installed Live 3rd (72533359M) to Factory Installed 2 Function Cable Operated Valve		911.00
		Compatible with Dealer Installed LCS Hydraulic Service Sets		
	72533573M	MC4 Multicoupler, 4 Coupler Quick Release for Dealer Installed LCS Hydraulic Sets		618.00
	72533575M	MC2 Multicoupler, 2 Coupler Quick Release for LCS Live 3rd Hydraulic Sets (Requires MC4 Multicoupler)		526.00
ADDITIONAL HYDRAULIC OPTIONS				**Group 07**
		Compatible with Factory and Dealer Installed Hydraulic Service Sets		
	72533567M	Soft Drive Ride Control System		907.00
	72533570M	Soft Drive Electric Shutoff Kit Compatible with Soft Drive Control System above		420.00
	72533571M	Hydraulic Implement Locking Set (Requires 3rd Function to Operate)		597.00
	72533576M	Selecto Fix Loader Part Flat Face Quick Release System for Hydraulic Implements (Requires 3rd Function)		551.00
	72533577M	Selecto Fix Implement Part Flat Face Quick Release System for Hydraulic Implements One Required with each Hydraulic Implement (Required with Selecto Fix Loader Part)		313.00

Order Code	Catalog Number	Description	Approx. Weight (lb.)	List Price
BUCKETS - OPTIONAL				**Group 08**
	72556037M	73" Material Bucket 185H, 25 cu ft (0.92 cu yd)	452	1,221.00
	72556038M	83" Material Bucket 210H, 24 cu ft (0.89 cu yds)	556	1,372.00
	72556039M	95" Material Bucket 240H, 28 cu ft (1.04 cu yds)	648	1,851.00
	72556041M	73" Heavy Duty Material Bucket 185HD, 25 cu ft (0.92 cu yd)	518	1,444.00
	72556042M	83" Heavy Duty Material Bucket 210HD, 29 cu ft (1.07 cu yds)	628	1,639.00
	72556043M	95" Heavy Duty Material Bucket 240HD, 34 cu ft (1.26 cu yds)	750	2,269.00
	72556046M	63" Construction Tooth Bucket 160HT, 23 cu ft (0.85 cu yd)	379	1,374.00
	72556047M	73" Construction Tooth Bucket 185HT, 25 cu ft (0.92 cu yd)	465	1,517.00
	72556048M	83" Construction Tooth Bucket 210HT, 29 cu ft (1.07 cu yds)	571	1,743.00
	72556049M	79" Light Material High Volume Bucket 200HV, 40 cu ft (1.48 cu yds)	602	1,545.00
	72556050M	87" Light Material High Volume Bucket 220HV, 44 cu ft (1.63 cu yds)	648	1,930.00
	72556261M	83" Heavy Duty High Volume Bucket 210HDV, 53 cu ft (1.96 cu yds)	917	2,218.00
	72556262M	95" Heavy Duty High Volume Bucket 240HDV, 60 cu ft (2.22 cu yds)	955	2,602.00
ATTACHMENTS - OPTIONAL				**Group 09**
	72556073M	Round Bale Spike	132	683.00
	72556285M	Big Bale Fork with Extension	273	966.00
	72556108M	83" Maxi-Grapple -210T (Tine Bucket)	1367	5,578.00
	72556109M	95" Maxi-Grapple -240T (Tine Bucket)	1444	5,925.00
	72556111M	83" Maxi-Grapple -210 (Standard Bucket)	1334	5,422.00
	72556112M	95" Maxi-Grapple -240 (Standard Bucket)	1411	5,771.00
	72556284M	48” Pallet Fork - 5,500 lbs (2,500 kg) Capacity	375	1,208.00
	72556114M	59" Wide (150 cm) Stone Fork	475	2,244.00
	72556115M	79" Wide (200 cm) Stone Fork	589	2,838.00
	72556264M	63" FlexiGrip 160 (for Round Bales) (Requires 3rd Function)	607	2,741.00
	72556265M	79" FlexiGrip 200 (for Round Bales) (Requires 3rd Function)	686	2,974.00
	72556058M	92" QuadroGrip 200 (for Round or Square Bales) (Requires 3rd Function)	916	4,542.00
	72533693M	Log Grab (Requires 48" Pallet Fork) (Requires 3rd Function)	187	1,847.00
	72533694M	Hydraulic Fork Shift Kit for 48-inch Pallet Forks (Requires 3rd Function)	165	1,181.00
ACCESSORIES - OPTIONAL				**Group 10**
	72556118M	Back Screen for Maxi Grapple	45	328.00
	72556070M	Weld-On Hook Set - (to Adapt Attachments)	30	231.00
	72556069M	Counterweight - 3-Point Hitch (Empty)	276	1,018.00
	72533580M	French Language Package (Manual and Decal Kit)		No Charge

MF 961 / MF 968 LOADERS

NON SELF-LEVELING / MECHANICAL SELF-LEVELING

MASSEY FERGUSON®

(F.O.B. Telford, TN with Distribution Center in Alliston, Ontario)

FEATURES

- One Piece Main Frame Arms and Compression Molded Curved Cross Member
- Quick Attach Implement Mounting with Euro Style Single Lever Locking System
- 6 mm High Tensile, Tapered Box Section Frame
- 70 mm Arm Profile
- 90 mm Double Acting Lift Cylinders
- 85 mm Double Acting, Bucket Cylinders **(MF 961)**
- 95 mm Double Acting, Equal Displacement Bucket Cylinders **(MF 968)**
- Industrial Grade Hydraulic Fittings and Hoses, Incorporated Internally Inside Loader Boom
- Central Valve, Equalized Oil Distribution Valve with Incorporated Relief Valves
- 4-Flat Face Hydraulic Tips on Boom and Bucket Circuits
- Protective Hose Cover
- Compatible with MF7714, 7715, 7716, 7718, 7614, 7615, 7616, and 7618
- Lock and Go Loader / Subframe Connection System
- Pivots are Greaseable and Include Industrial Grade Pins and Bushings
- Powder Painted with Corrosion Protection
- Bucket Level Indicator
- Front Bumper Guard (with Subframe Set)
- Buckets Have Heavy Duty, Welded-On Cutting Edge, Box Beam Section for Stiffness and Torsional Rigidity and Lateral Reinforcing Bars
- 167" (4.25 m) Lift Height to Pivot Pin
- **MF 961**: 4343 lb. (1970 kg) Lift Capacity to Full Height, 31.5" (800 mm) Forward of Pivot Pin per ASABE 301.3 @ 2828 PSI
- **MF 968**: 5401 lb. (2450 kg) Lift Capacity to Full Height, 31.5" (800 mm) Forward of Pivot Pin per ASABE 301.3 @ 2828 PSI

TRACTORS MUST BE PROPERLY BALLASTED FOR LOADER OPERATION. SEE OPERATOR'S MANUAL

NOTE: SPECIFICATIONS MAY VARY BETWEEN MODELS, TIRE EQUIPMENT AND HYDRAULIC OPTIONS

IMPORTANT NOTE: Field Installed LCS Joystick is very different from the factory installed multi-function loader joystick, and will have limited capabilities comparably.

NOTE: Front Fenders Positioned at Narrow Tread Settings may Interfere with the Loader Lift Cylinders

FOR MORE INFORMATION ON FIELD INSTALLED LOADER OPTIONS SEE PAGE 57

Order Code	Catalog Number	Description	Approx. Weight (lb.)	List Price
BASE MACHINE - REQUIRED				**Group 01**
MF961	72533503	MF961 Base Loader, Non Self-Leveling	1385	8,006.00
MF968	72533506	MF968 Base Loader, Mechanical Self-Leveling	1612	9,948.00
		Loader Ready Tractors Include the Factory Installed Loader Subframe Mounting Kit and Loader Joystick for the MF900 Series Loader. Order the Base Loader Above, Options and Attachments to Complete the Loader.		
DEALER INSTALLED SUBFRAME MOUNTING KITS				**Group 02**
Choose One	72533886M	Subframe Kit for MF7714, 7715, 7716, and 7718 Dyna-4 or Dyna-6, Classic, Deluxe or Premium Editions		2,520.00
	72533887M	Subframe Kit for MF7715, 7716, and 7718 Dyna-VT, Deluxe or Premium Editions		2,520.00
	72533594M	Subframe Kit for MF7614, 7615, 7616, 7618 Dyna-4 or Dyna-6, Classic, Deluxe or Premium Editions		2,520.00
	72533595M	Subframe Kit for MF7615, 7616, and 7618 Dyna-VT, Deluxe or Premium Editions		2,520.00

Order Code	Catalog Number	Description	Approx. Weight (lb.)	List Price
DEALER INSTALLED 2 FUNCTION OPTIONS				**Group 03**
	◆72533888M	2 Function LCS Mechanical Cable Controlled Joystick, **Closed Center** Load Sensing, for MF7714, 7715, 7716, 7718, Dyna-4 or Dyna-6, Classic Edition		1,450.00
	72533890M	2 Function LCS Electric Controlled Joystick, **Closed Center** Load Sensing, for MF7715, 7716, 7718, Dyna-6 or Dyna-VT, Deluxe or Premium Editions		3,349.00
	72533585M	2 Function LCS Mechanical Cable Controlled Joystick, **Open Center**, for MF7614, 7615, 7616, 7618, Dyna-4 or Dyna-6, Classic Edition		1,450.00
	◆72533589M	2 Function LCS Mechanical Cable Controlled Joystick, **Closed Center** Load Sensing, for MF7614, 7615, 7616, 7618, Dyna-4 or Dyna-6, Classic Edition		1,450.00
	72533618M	2 Function LCS Electric Controlled Joystick, **Closed Center** Load Sensing, for MF7615, 7616, 7618, Dyna-6 or Dyna-VT, Deluxe or Premium Editions		3,349.00
	72533549M	Standard 2 Function Hose Set (No Joystick, Uses Tractor Remotes)		515.00

◆ **Requires 4313756M91 and 3796801M1 from AGCO Parts to complete hydraulic connection only for Dyna-4 or Dyna-6 with Closed Center Load Sensing**

3RD FUNCTION OPTIONS				**Group 04**
	72533622M	Live 3rd Function for use with Dealer Installed 2 Function LCS Mechanical Cable Controlled Joystick (Requires Live 3rd Function Hose Kit for Loader Boom)		960.00
	72533621M	Live 3rd Function for use with Dealer Installed 2 Function LCS Electric Controlled Joystick (Requires Live 3rd Function Hose Kit for Loader Boom)		960.00
	72533359M	Dealer Installed Live 3rd Set for use with Loader Ready Tractors with 2 Function Load Sensing Cable Operated Hydraulic Set (for Classic Editions MF6600 and MF7600) (Requires Live 3rd Function Hose Kit for Loader Boom)		1,048.00
	72556254M	3rd Function Electric Diverter Valve for Dealer Installed Loader Hydraulics or Loader Ready Tractors (Does not require Live 3rd Function Hose Kit)		823.00
	72533560M	Live 3rd Function Hose Kit for use with 72533622M, 72533621M, or 72533359M, for Loader Boom with Flat Face Couplers		320.00

Order Code	Catalog Number	Description	Approx. Weight (lb.)	List Price
HYDRAULIC OPTIONS				**Group 06**
		Only Compatible with Factory Installed Loader Ready Hydraulic Service Sets		
	72533343M	4 Coupler Quick Release Single Lever for Loader Ready Factory Installed 2 Function Hydraulic Set		638.00
	72533344M	6 Coupler Quick Release Single Lever Compatible when adding a Dealer Installed Live 3rd (72533359M) to Factory Installed 2 Function Cable Operated Valve		911.00
		Compatible with Dealer Installed LCS Hydraulic Service Sets		
	72533573M	MC4 Multicoupler, 4 Coupler Quick Release for Dealer Installed LCS Hydraulic Sets		618.00
	72533575M	MC2 Multicoupler, 2 Coupler Quick Release for LCS Live 3rd Hydraulic Sets (Requires MC4 Multicoupler)		526.00
ADDITIONAL HYDRAULIC OPTIONS				**Group 07**
		Compatible with Factory and Dealer Installed Hydraulic Service Sets		
	72533567M	Soft Drive Ride Control System		907.00
	72533570M	Soft Drive Electric Shutoff Kit Compatible with Soft Drive Control System above		420.00
	72533571M	Hydraulic Implement Locking Set (Requires 3rd Function to Operate)		597.00
	72533576M	Selecto Fix Loader Part Flat Face Quick Release System for Hydraulic Implements (Requires 3rd Function)		551.00
	72533577M	Selecto Fix Implement Part Flat Face Quick Release System for Hydraulic Implements One Required with each Hydraulic Implement (Required with Selecto Fix Loader Part)		313.00

MF 961 / MF 968 LOADERS

NON SELF-LEVELING / MECHANICAL SELF-LEVELING

MASSEY FERGUSON®

Order Code	Catalog Number	Description	Approx. Weight (lb.)	List Price
BUCKETS - OPTIONAL				**Group 08**
	72556038M	83" Material Bucket 210H, 24 cu ft (0.89 cu yds)	556	1,372.00
	72556039M	95" Material Bucket 240H, 28 cu ft (1.04 cu yds)	648	1,851.00
	72556041M	73" Heavy Duty Material Bucket 185HD, 25 cu ft (0.92 cu yd)	518	1,444.00
	72556042M	83" Heavy Duty Material Bucket 210HD, 29 cu ft (1.07 cu yds)	628	1,639.00
	72556043M	95" Heavy Duty Material Bucket 240HD, 34 cu ft (1.26 cu yds)	750	2,269.00
	72556044M	102" Heavy Duty Material Bucket 260HD, 36 cu ft (1.33 cu yds)	805	2,747.00
	72556047M	73" Construction Tooth Bucket 185HT, 25 cu ft (0.92 cu yd)	465	1,517.00
	72556048M	83" Construction Tooth Bucket 210HT, 29 cu ft (1.07 cu yds)	571	1,743.00
	72556261M	83" Heavy Duty High Volume Bucket 210HDV, 53 cu ft (1.96 cu yds)	917	2,218.00
	72556262M	95" Heavy Duty High Volume Bucket 240HDV, 60 cu ft (2.22 cu yds)	955	2,602.00
	72556263M	102" Heavy Duty High Volume Bucket 260HDV, 65 cu ft (2.4 cu yds)	1036	3,230.00
ATTACHMENTS - OPTIONAL				**Group 09**
	72556073M	Round Bale Spike	132	683.00
	72556285M	Big Bale Fork with Extension	273	966.00
	72556108M	83" Maxi-Grapple -210T (Tine Bucket)	1367	5,578.00
	72556109M	95" Maxi-Grapple -240T (Tine Bucket)	1444	5,925.00
	72556110M	102" Maxi-Grapple -260T (Tine Bucket)	1610	6,393.00
	72556111M	83" Maxi-Grapple -210 (Standard Bucket)	1334	5,422.00
	72556112M	95" Maxi-Grapple -240 (Standard Bucket)	1411	5,771.00
	72556113M	102" Maxi-Grapple -260 (Standard Bucket)	1567	6,113.00
	72556284M	48” Pallet Fork - 5,500 lbs (2,500 kg) Capacity	375	1,208.00
	72556115M	79" Wide (200 cm) Stone Fork	589	2,838.00
	72556264M	63" FlexiGrip 160 (for Round Bales) (Requires 3rd Function)	607	2,741.00
	72556265M	79" FlexiGrip 200 (for Round Bales) (Requires 3rd Function)	686	2,974.00
	72556058M	92" QuadroGrip 200 (for Round or Square Bales) (Requires 3rd Function)	916	4,542.00
	72533693M	Log Grab (Requires 48" Pallet Fork) (Requires 3rd Function)	187	1,847.00
	72533694M	Hydraulic Fork Shift Kit for 48-inch Pallet Forks (Requires 3rd Function)	165	1,181.00
ACCESSORIES - OPTIONAL				**Group 10**
	72556118M	Back Screen for Maxi Grapple	45	328.00
	72556070M	Weld-On Hook Set - (to Adapt Attachments)	30	231.00
	72556069M	Counterweight - 3-Point Hitch (Empty)	276	1,018.00
	72533580M	French Language Package (Manual and Decal Kit).		No Charge

MF 978 LOADER

MECHANICAL SELF-LEVELING

MASSEY FERGUSON®

(F.O.B. Telford, TN with Distribution Center in Alliston, Ontario)

FEATURES

- One Piece Main Frame Arms and Compression Molded Curved Cross Member
- Quick Attach Implement Mounting with Euro Style Single Lever Locking System
- 6 mm High Tensile, Tapered Box Section Frame
- 70 mm Arm Profile
- 95 mm Double Acting Lift Cylinders
- 100 mm Double Acting, Equal Displacement Bucket Cylinders
- Industrial Grade Hydraulic Fittings and Hoses, Incorporated Internally Inside Loader Boom
- Central Valve, Equalized Oil Distribution Valve with Incorporated Relief Valves
- 4-Flat Face Hydraulic Tips on Boom and Bucket Circuits
- Protective Hose Cover
- Compatible with MF7719, 7720, 7722 and MF7619, 7620, 7622
- Lock and Go Loader / Subframe Connection System
- Pivots are Greaseable and Include Industrial Grade Pins and Bushings
- Powder Painted with Corrosion Protection
- Bucket Level Indicator
- Front Bumper Guard (with Subframe Set)
- Buckets Have Heavy Duty, Welded-On Cutting Edge, Box Beam Section for Stiffness and Torsional Rigidity and Lateral Reinforcing Bars
- 177" (4.50 m) Lift Height to Pivot Pin
- 5357 lb. (2430 kg) Lift Capacity to Full Height, 31.5" (800 mm) Forward of Pivot Pin per ASABE 301.3 @ 2828 PSI

TRACTORS MUST BE PROPERLY BALLASTED FOR LOADER OPERATION. SEE OPERATOR'S MANUAL

NOTE: SPECIFICATIONS MAY VARY BETWEEN MODELS, TIRE EQUIPMENT AND HYDRAULIC OPTIONS

IMPORTANT NOTE: Field Installed LCS Joystick is very different from the factory installed multi-function loader joystick, and will have limited capabilities comparably.

FOR MORE INFORMATION ON FIELD INSTALLED LOADER OPTIONS SEE PAGE 57

Order Code	Catalog Number	Description	Approx. Weight (lb.)	List Price
BASE MACHINE - REQUIRED				**Group 01**
MF978	72533507	MF978 Base Loader	1709	10,581.00
		Loader Ready Tractors Include the Factory Installed Loader Subframe Mounting Kit and Loader Joystick for the MF900 Series Loader. Order the Base Loader Above, Options and Attachments to Complete the Loader.		
DEALER INSTALLED SUBFRAME MOUNTING KITS				**Group 02**
Choose One	72533861M	Subframe Kit for MF7719, 7720 and 7722 Dyna-6 or Dyna-VT, Classic, Deluxe or Premium Editions		2,959.00
	7633206M	Subframe Kit for MF7619, 7620, 7622 Dyna-6, Classic, Deluxe or Premium Editions		2,959.00
	72533521M	Subframe Kit for MF7619, 7620, 7622 Dyna-VT, Deluxe or Premium Editions		2,959.00

MF 978 LOADER

MECHANICAL SELF-LEVELING

MASSEY FERGUSON®

Order Code	Catalog Number	Description	Approx. Weight (lb.)	List Price
DEALER INSTALLED 2 FUNCTION OPTIONS				**Group 03**
Closed Center Load Sensing				
	◆72533888M	2 Function LCS Mechanical Cable Controlled Joystick, for MF7719, 7720, 7722, Dyna-6, Classic Edition		1,450.00
	72533890M	2 Function LCS Electric Controlled Joystick, for MF7719, 7720, 7722, Dyna-6 or Dyna-VT, Deluxe or Premium Editions		3,349.00
	◆72533589M	2 Function LCS Mechanical Cable Controlled Joystick, for MF7619, 7620, 7622, Dyna-6, Classic Edition		1,450.00
	72533618M	2 Function LCS Electric Controlled Joystick, for MF7619, 7620, 7622, Dyna-6 or Dyna-VT, Deluxe or Premium Editions		3,349.00

◆ **Requires 4313756M91 and 3796801M1 from AGCO Parts to complete hydraulic connection only for Dyna-6 with Closed Center Load Sensing**

3RD FUNCTION OPTIONS				**Group 04**
	72533622M	Live 3rd Function for use with Dealer Installed 2 Function LCS Mechanical Cable Controlled Joystick (Requires Live 3rd Function Hose Kit for Loader Boom)		960.00
	72533621M	Live 3rd Function for use with Dealer Installed 2 Function LCS Electric Controlled Joystick (Requires Live 3rd Function Hose Kit for Loader Boom)		960.00
	72533359M	Dealer Installed Live 3rd Set for use with Loader Ready Tractors with 2 Function Load Sensing Cable Operated Hydraulic Set (for Classic Editions MF6600 and MF7600) (Requires Live 3rd Function Hose Kit for Loader Boom)		1,048.00
	72556254M	3rd Function Electric Diverter Valve for Dealer Installed Loader Hydraulics or Loader Ready Tractors (Does not require Live 3rd Function Hose Kit)		823.00
	72533562M	Live 3rd Function Hose Kit for use with 72533622M, 72533621M, or 72533359M, for Loader Boom with Flat Face Couplers		320.00

MF 978 LOADER

MECHANICAL SELF-LEVELING

Order Code	Catalog Number	Description	Approx. Weight (lb.)	List Price
HYDRAULIC OPTIONS				**Group 06**
		Only Compatible with Factory Installed Loader Ready Hydraulic Service Sets		
	72533343M	4 Coupler Quick Release Single Lever for Loader Ready Factory Installed 2 Function Hydraulic Set		638.00
	72533344M	6 Coupler Quick Release Single Lever Compatible when adding a Dealer Installed Live 3rd (72533359M) to Factory Installed 2 Function Cable Operated Valve		911.00
		Compatible with Dealer Installed Hydraulic LCS Service Sets		
	72533573M	MC4 Multicoupler, 4 Coupler Quick Release for Dealer Installed LCS Hydraulic Sets		618.00
	72533575M	MC2 Multicoupler, 2 Coupler Quick Release for LCS Live 3rd Hydraulic Sets (Requires MC4 Multicoupler)		526.00
ADDITIONAL HYDRAULIC OPTIONS				**Group 07**
		Compatible with Factory and Dealer Installed Hydraulic Service Sets		
	72533568M	Soft Drive Ride Control System		907.00
	72533570M	Soft Drive Electric Shutoff Kit Compatible with Soft Drive Control System above		420.00
	72533571M	Hydraulic Implement Locking Set (Requires 3rd Function to Operate)		597.00
	72533576M	Selecto Fix Loader Part Flat Face Quick Release System for Hydraulic Implements (Requires 3rd Function)		551.00
	72533577M	Selecto Fix Implement Part Flat Face Quick Release System for Hydraulic Implements One Required with each Hydraulic Implement (Required with Selecto Fix Loader Part)		313.00

MF 978 LOADER

MECHANICAL SELF-LEVELING

MASSEY FERGUSON®

Order Code	Catalog Number	Description	Approx. Weight (lb.)	List Price
BUCKETS - OPTIONAL				**Group 08**
	72556038M	83" Material Bucket 210H, 24 cu ft (0.89 cu yds)	556	1,372.00
	72556039M	95" Material Bucket 240H, 28 cu ft (1.04 cu yds)	648	1,851.00
	72556042M	83" Heavy Duty Material Bucket 210HD, 29 cu ft (1.07 cu yds)	628	1,639.00
	72556043M	95" Heavy Duty Material Bucket 240HD, 34 cu ft (1.26 cu yds)	750	2,269.00
	72556044M	102" Heavy Duty Material Bucket 260HD, 36 cu ft (1.33 cu yds)	805	2,747.00
	72556048M	83" Construction Tooth Bucket 210HT, 29 cu ft (1.07 cu yds)	571	1,743.00
	72556261M	83" Heavy Duty High Volume Bucket 210HDV, 53 cu ft (1.96 cu yds)	917	2,218.00
	72556262M	95" Heavy Duty High Volume Bucket 240HDV, 60 cu ft (2.22 cu yds)	955	2,602.00
	72556263M	102" Heavy Duty High Volume Bucket 260HDV, 65 cu ft (2.4 cu yds)	1036	3,230.00
ATTACHMENTS - OPTIONAL				**Group 09**
	72556073M	Round Bale Spike	132	683.00
	72556285M	Big Bale Fork with Extension	273	966.00
	72556109M	95" Maxi-Grapple -240T (Tine Bucket)	1444	5,925.00
	72556110M	102" Maxi-Grapple -260T (Tine Bucket)	1610	6,393.00
	72556112M	95" Maxi-Grapple -240 (Standard Bucket)	1411	5,771.00
	72556113M	102" Maxi-Grapple -260 (Standard Bucket)	1567	6,113.00
	72556284M	48” Pallet Fork - 5,500 lbs (2,500 kg) Capacity	375	1,208.00
	72556115M	79" Wide (200 cm) Stone Fork	589	2,838.00
	72556264M	63" FlexiGrip 160 (for Round Bales) (Requires 3rd Function)	607	2,741.00
	72556265M	79" FlexiGrip 200 (for Round Bales) (Requires 3rd Function)	686	2,974.00
	72556058M	92" QuadroGrip 200 (for Round or Square Bales) (Requires 3rd Function)	916	4,542.00
	72533693M	Log Grab (Requires 48" Pallet Fork) (Requires 3rd Function)	187	1,847.00
	72533694M	Hydraulic Fork Shift Kit for 48-inch Pallet Forks (Requires 3rd Function)	165	1,181.00
ACCESSORIES - OPTIONAL				**Group 10**
	72556118M	Back Screen for Maxi Grapple	45	328.00
	72556070M	Weld-On Hook Set - (to Adapt Attachments)	30	231.00
	72556069M	Counterweight - 3-Point Hitch (Empty)	276	1,018.00
	72533580M	French Language Package (Manual and Decal Kit)		No Charge

MF 988 LOADER

MECHANICAL SELF-LEVELING

MASSEY FERGUSON®

(F.O.B. Telford, TN with Distribution Center in Alliston, Ontario)

FEATURES

- One Piece Main Frame Arms and Compression Molded Curved Cross Member
- Quick Attach Implement Mounting with Euro Style Single Lever Locking System
- 6 mm High Tensile, Tapered Box Section Frame
- 70 mm Arm Profile
- 95 mm Double Acting Lift Cylinders
- 100 mm Double Acting, Equal Displacement Bucket Cylinders
- Industrial Grade Hydraulic Fittings and Hoses, Incorporated Internally Inside Loader Boom
- Central Valve, Equalized Oil Distribution Valve with Incorporated Relief Valves
- 4-Flat Face Hydraulic Tips on Boom and Bucket Circuits
- Protective Hose Cover
- Compatible with MF7724, 7726, MF8700 Series, and MF7624, 7626, MF8600 Series
- Lock and Go Loader / Subframe Connection System
- Pivots are Greaseable and Include Industrial Grade Pins and Bushings
- Powder Painted with Corrosion Protection
- Bucket Level Indicator
- Front Bumper Guard (with Subframe Set)
- Buckets Have Heavy Duty, Welded-On Cutting Edge, Box Beam Section for Stiffness and Torsional Rigidity and Lateral Reinforcing Bars
- 195" (4.95 m) Lift Height to Pivot Pin
- 6107 lb. (2770 kg) Lift Capacity to Full Height, 31.5" (800 mm) Forward of Pivot Pin per ASABE 301.3 @ 2828 PSI

TRACTORS MUST BE PROPERLY BALLASTED FOR LOADER OPERATION. SEE OPERATOR'S MANUAL

NOTE: SPECIFICATIONS MAY VARY BETWEEN MODELS, TIRE EQUIPMENT AND HYDRAULIC OPTIONS

IMPORTANT NOTE: Field Installed LCS Joystick is very different from the factory installed multi-function loader joystick, and will have limited capabilities comparably.

FOR MORE INFORMATION ON FIELD INSTALLED LOADER OPTIONS SEE PAGE 57

Order Code	Catalog Number	Description	Approx. Weight (lb.)	List Price
BASE MACHINE - REQUIRED				**Group 01**
MF988	72533508	MF988 Base Loader	1847	13,799.00
		Loader Ready Tractors Include the Factory Installed Loader Subframe Mounting Kit and Loader Joystick for the MF900 Series Loader. Order the Base Loader Above, Options and Attachments to Complete the Loader.		
DEALER INSTALLED SUBFRAME MOUNTING KITS				**Group 02**
Choose One	72533862M	Subframe Kit for MF7724, 7726, Dyna-6 or Dyna-VT, Classic, Deluxe or Premium Editions		3,536.00
	72533796M	Subframe Kit for MF7624, 7626, Dyna-6, Deluxe or Premium Editions		3,536.00
	72533522M	Subframe Kit for MF7624, Dyna-VT, Deluxe or Premium Editions		3,536.00
	72533358M	Subframe Kit for MF8700 Series and MF8600 Series, Dyna-VT	924	3,536.00
DEALER INSTALLED 2 FUNCTION OPTIONS				**Group 03**
Closed Center Load Sensing				
	◆72533888M	2 Function LCS Mechanical Cable Controlled Joystick, for MF7724 and 7726, Dyna-6, Classic Edition		1,450.00
	72533890M	2 Function LCS Electric Controlled Joystick, for MF7724 and 7726, Dyna-6 or Dyna-VT, Deluxe or Premium Editions		3,349.00
	72533618M	2 Function LCS Electric Controlled Joystick, for MF7624, 7626, Dyna-6 or Dyna-VT, Deluxe or Premium Editions		3,349.00
	72533620M	2 Function LCS Electric Controlled Joystick, for MF8700 Series and MF8600 Series, Dyna-VT		3,349.00

◆ **Requires 4313756M91 and 3796801M1 from AGCO Parts to complete hydraulic connection for Dyna-6**

Order Code	Catalog Number	Description	Approx. Weight (lb.)	List Price
3RD FUNCTION OPTIONS				**Group 04**
	72533622M	Live 3rd Function for use with Dealer Installed 2 Function LCS Mechanical Cable Controlled Joystick (Requires Live 3rd Function Hose Kit for Loader Boom)		960.00
	72533621M	Live 3rd Function for use with Dealer Installed 2 Function LCS Electric Controlled Joystick (Requires Live 3rd Function Hose Kit for Loader Boom)		960.00
	72556255M	3rd Function Electric Diverter Valve for Dealer Installed Loader Hydraulics or Loader Ready Tractors (Does not require Live 3rd Function Hose Kit)		823.00
	72533564M	Live 3rd Function Hose Kit for use with 72533622M or 72533621M, for Loader Boom with Flat Face Couplers		320.00
HYDRAULIC OPTIONS				**Group 06**
		Only Compatible with Factory Installed Loader Ready Hydraulic Service Sets		
	72533343M	4 Coupler Quick Release Single Lever for Loader Ready Factory Installed 2 Function Hydraulic Set		638.00
	72533344M	6 Coupler Quick Release Single Lever Compatible when adding a Dealer Installed Live 3rd to Factory Installed 2 Function Cable Operated Valve		911.00
		Compatible with Dealer Installed LCS Hydraulic Service Sets		
	72533573M	MC4 Multicoupler, 4 Coupler Quick Release for Dealer Installed LCS Hydraulic Sets		618.00
	72533575M	MC2 Multicoupler, 2 Coupler Quick Release for LCS Live 3rd Hydraulic Sets (Requires MC4 Multicoupler)		526.00
ADDITIONAL HYDRAULIC OPTIONS				**Group 07**
		Compatible with Factory and Dealer Installed Hydraulic Service Sets		
	72533569M	Soft Drive Ride Control System		907.00
	72533570M	Soft Drive Electric Shutoff Kit Compatible with Soft Drive Control System above		420.00
	72533572M	Hydraulic Implement Locking Set (Requires 3rd Function to Operate)		597.00
	72533576M	Selecto Fix Loader Part Flat Face Quick Release System for Hydraulic Implements (Requires 3rd Function)		551.00
	72533577M	Selecto Fix Implement Part Flat Face Quick Release System for Hydraulic Implements One Required with each Hydraulic Implement (Required with Selecto Fix Loader Part)		313.00

MF 988 LOADER

MECHANICAL SELF-LEVELING

MASSEY FERGUSON®

Order Code	Catalog Number	Description	Approx. Weight (lb.)	List Price
BUCKETS - OPTIONAL				**Group 08**
	72556038M	83" Material Bucket 210H, 24 cu ft (0.89 cu yds)	556	1,372.00
	72556039M	95" Material Bucket 240H, 28 cu ft (1.04 cu yds)	648	1,851.00
	72556043M	95" Heavy Duty Material Bucket 240HD, 34 cu ft (1.26 cu yds)	750	2,269.00
	72556044M	102" Heavy Duty Material Bucket 260HD, 36 cu ft (1.33 cu yds)	805	2,747.00
	72556261M	83" Heavy Duty High Volume Bucket 210HDV, 53 cu ft (1.96 cu yds)	917	2,218.00
	72556262M	95" Heavy Duty High Volume Bucket 240HDV, 60 cu ft (2.22 cu yds)	955	2,602.00
	72556263M	102" Heavy Duty High Volume Bucket 260HDV, 65 cu ft (2.4 cu yds)	1036	3,230.00
ATTACHMENTS - OPTIONAL				**Group 09**
	72556073M	Round Bale Spike	132	683.00
	72556285M	Big Bale Fork with Extension	273	966.00
	72556109M	95" Maxi-Grapple -240T (Tine Bucket)	1444	5,925.00
	72556110M	102" Maxi-Grapple -260T (Tine Bucket)	1610	6,393.00
	72556112M	95" Maxi-Grapple -240 (Standard Bucket)	1411	5,771.00
	72556113M	102" Maxi-Grapple -260 (Standard Bucket)	1567	6,113.00
	72556284M	48” Pallet Fork - 5,500 lbs (2,500 kg) Capacity	375	1,208.00
	72556115M	79" Wide (200 cm) Stone Fork	589	2,838.00
	72556264M	63" FlexiGrip 160 (for Round Bales) (Requires 3rd Function)	607	2,741.00
	72556265M	79" FlexiGrip 200 (for Round Bales) (Requires 3rd Function)	686	2,974.00
	72556058M	92" QuadroGrip 200 (for Round or Square Bales) (Requires 3rd Function)	916	4,542.00
	72533693M	Log Grab (Requires 48" Pallet Fork) (Requires 3rd Function)	187	1,847.00
	72533694M	Hydraulic Fork Shift Kit for 48-inch Pallet Forks (Requires 3rd Function)	165	1,181.00
ACCESSORIES - OPTIONAL				**Group 10**
	72556118M	Back Screen for Maxi Grapple	45	328.00
	72556070M	Weld-On Hook Set - (to Adapt Attachments)	30	231.00
	72556069M	Counterweight - 3-Point Hitch (Empty)	276	1,018.00
	72533580M	French Language Package (Manual and Decal Kit).		No Charge

Field Installed Loader Options

MASSEY FERGUSON®

ITEM	CATALOG #	DESCRIPTION	WEIGHT
4 Coupler Quick Release 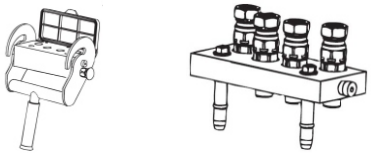	72533343M	4 Coupler Quick Release Compatible with Factory Installed Loader Valve	
6 Couple Quick Release 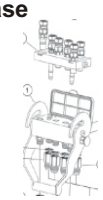	72533344M	6 Coupler Quick Release Single Lever Compatible When Adding a Field Installed Live 3rd to Factory Installed Two Function Cable Operated Valve	
Material Bucket	72556037M 72556038M 72556039M	73" Material Bucket, 25 cu ft 83" Material Bucket 210H, 24 cu ft 95" Material Bucket 240H, 28 cu ft	205kg 452lb 252kg 556lb 294kg 648lb
Heavy Duty Material Bucket	72556041M 72556042M 72556043M 72556044M	73" Heavy Duty Material Bucket 185HD, 25 cu ft 83" Heavy Duty Material Bucket 210HD, 29 cu ft 95" Heavy Duty Material Bucket 240HD, 34 cu ft 102" Heavy Duty Material Bucket 260HD, 36 cu ft	235kg 518lb 285kg 628lb 340kg 750lb 365kg 805lb
Heavy Duty High Volume Bucket	72556261M 72556262M 72556263M	83" Heavy Duty Volume Bucket 210HDV, 53 cu ft 95" Heavy Duty Volume Bucket 240HDV, 60 cu ft 102" Heavy Duty Volume Bucket 260HDV, 65.3 cu ft	917lb 955lb 1,036lb
Construction Tooth Bucket	72556046M 72556047M 72556048M	63" Construction Tooth Bucket 160HT, 23 cu ft 73" Construction Tooth Bucket 185HT, 25 cu ft 83" Construction Tooth Bucket 210HT, 29 cu ft	172kg 379lb 211kg 465lb 259kg 571lb
Light Material/Snow Bucket	72556049M 72556050M	79" Light Material / Snow Bucket, 41 cu ft 87" Light Material / Snow Bucket, 44 cu ft	273kg 602lb 294kg 648lb
Pallet Fork	72556284M	48” Pallet Fork - 5,500 lbs (2,500 kg) Capacity	170kg 375lb
Stone Fork	72556114M 72556115M	59" (150 cm) Stone Fork 79" (200 cm) Stone Fork	216kg 475lb 368kg 589lb
Bale Spike	72556073M	Round Bale Spike	60kg 132lb

Field Installed Loader Options

MASSEY FERGUSON®

ITEM	CATALOG #	DESCRIPTION	WEIGHT
Big Bale Fork	72556285M	Big Bale Fork with Extension	124kg 273lb
Log Grab For all Pallet Fork Attachments	72533693M	Log Grab (Requires 48" Pallet Fork) (Requires 3rd Function)	85kg 187lb
Hydraulic Fork Shift Kit for 48-inch Pallet Forks	72533694M	Hydraulic Fork Shift Kit (Requires 3rd Function)	75kg 165lb
Flexigrip with Backstop	72556264M 72556265M	63" FlexiGrip 160 (for Round Bales) 79" FlexiGrip 200 (for Round Bales)	276kg 607lb 312kg 686lb
Quadrogrip with Backstop	72556058M	QuadroGrip (Round or Square Bales)	416kg 916lb
Maxi-Grapple **(BACK SCREEN NOT INCLUDED)** **GRAPPLE ASSEMBLY WITH BUCKET AND TINES** 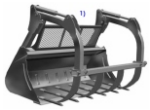	72556108M 72556109M 72556110M	83" Maxi-Grapple MK2 - T210 (Tine Bucket) 95" Maxi-Grapple MK2 - T 240 (Tine Bucket) 102" Maxi-Grapple MK2 - T 260 (Tine Bucket)	620kg 1367lb 655kg 1444lb 730kg 1610lb
Maxi-Grapple **(BACK SCREEN NOT INCLUDED) GRAPPLE ASSEMBLY COMPLETE (NO TINES)**	72556111M 72556112M 72556113M	83" Maxi-Grapple MK2 - 210 (Standard Bucket) 95" Maxi-Grapple MK2 - 240 (Standard Bucket) 102" Maxi-Grapple MK2 - 260 (Standard Bucket)	605kg 1334lb 640kg 1411lb 710kg 1567lb
Back Screen - For Maxi-Grapple	72556118M	Back Screen for Maxi-Grapple Assembly	
Counterweight Three Point Hitch (Empty)	72556069M	Counterweight - 3-Point Hitch (Empty)	125kg 276lb
Weld-On Hook Set	72556070M	Weld-On Hook Set (to Adapt Customers Attachments)	

Field Installed Loader Options

ITEM	CATALOG #	DESCRIPTION	WEIGHT
Selecto Fix Loader Part 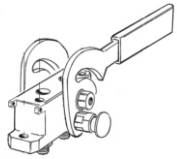	72533576M	Selecto Fix Loader Part (Flat Face Quick Release System for Hydraulic Implements) Requires 3rd Function	
Selecto Fix Implement Part 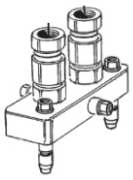	72533577M	Selecto Fix Implement Part (Flat Face Quick Release System for Hydraulic Implements) One Required with each Hydraulic Implement (Required with Selecto Fix Loader Part)	
Implement Lock 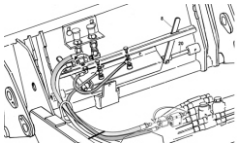	72533571M	Hydraulic Implement Locking Set, Requires Third Function to operate	
MC4 Multicoupler	72533573M	MC4 Multicoupler, 4 Coupler Quick Release for Field Installed LCS Hydraulic Service Sets	
MC2 Multicoupler	72533575M	MC2 Multicoupler, 2 Coupler Quick Release for Field Installed LCS "LIVE 3rd" hydraulic Service Sets, When ordering also order MC4 Multicoupler	

MASSEY FERGUSON®

MOWERS

MOWER APPLICATION CHART

MASSEY FERGUSON®

TRACTOR MODEL	2315 Mower (54")	2320 Mower (54")	2326 Mower (60")	1505 Mower (60")	1505 Mower (72")	1705 Mower (72")
GC1705 GC1715	X	X	X			
GC2400 GC2600	X	X	X			
GC1710 TLB GC1720 TLB	X	X	X			
GC2410 TLB GC2610 TLB	X	X	X			
1533, 1540					X	
1528, 1531				X	X	
1529, 1532				X	X	
1523, 1526				X		
1635					X	
1736						4WD Platform Only

MF 2300 SERIES MOWER

MASSEY FERGUSON®

(F.O.B. Port of Entry)

FEATURES

- Mid-Mounted Stamped Tunnel Deck
- Right Hand Discharge (only on MF2320 and 2326)
- Cutting Width:
  MF2315: 54 inch
  MF2320: 54 inch
  MF2326: 60 inch
- Six (6) Overlapping Offset Blades on MF2315
  Three (3) Overlapping Offset Blades on MF2320 and MF2326
- Cutting Height:
  MF2315: 1.3 - 4.9 inches
  MF2320: 1.2 - 4.7 inches
  MF2326: 1.2 - 4.7 inches
- Lift: Parallel Linkage, Hydraulic
- Transport Height: 5.9 inches
- Lock-up Kit Standard. Allows use of 3-Point
- Quick Disconnect
- Compatible with DL95 Loader
- Compatible with MF CB65 Backhoe on GC1705/1715 and GC1710/1720
  3-Point Linkage must be Removed
- Mid PTO Driveshaft to Mower Gear Box
- Blade Tip Speed:
  MF2315: 16,200 FPM
  MF2320: 17,200 FPM
  MF2326: 17,600 FPM
- Two (2) Front Hard Rubber Gauge Wheels with Bearings, Castering Regreasable
- Two (2) Rear Hard Rubber Gauge Wheels with Bearings, Regreasable
- One (1) Front Roller and Two (2) Rear Rollers
- **Note! Backhoe must be removed on TLB versions in order to install mower**

Order Code	Catalog Number	Description	Approx. Weight (lb.)	List Price
MF2300 Series		**MF2300 Series Base Mower**		
MF2315-SSM54	7492001	MF2315 54-inch Mower Deck (Mulching) - Non-Drive Over . . . . . For GC2400, GC2410 TLB, GC2600 and GC2610 TLB and all GC1700 Series		2,459.00
MF2320-SSM54	7491001	MF2320 54-inch Mower Deck - Non-Drive Over . . . . . For GC2400, GC2410 TLB, GC2600 and GC2610 TLB and all GC1700 Series		2,229.00
MF2326-SSM60	72530409	MF2326 60-inch Mower Deck - Drive Over . . . . . For all GC1700 Series Tractors	275	2,469.00

MASSEY FERGUSON®

RESERVED

MF 1505 MID-MOUNT MOWER

MASSEY FERGUSON®

(F.O.B. Port of Entry)

FEATURES

- Mid-Mount Stamped Tunnel Deck
- 60" Cutting Width
- Three (3) Overlapping Offset Blades
- Cutting Height: 2 To 4 Inches
- Lift:
  Parallel Lift Connected to Left Hand 3-Point Lift Arm
  Lift Height Approximately 6”
  Lift Lockup Allows Use of 3pt with Mower Raised
- Right Hand Hinged Discharge Chute
- Quick Disconnect with Single Handle Front Latch and Two Spring Loaded Pins at Rear
- Compatible with MFL100E Loader
- Mower Fits MF1526
- Mid PTO Shaft Drive To Mower Gearbox
- One Center Mounted Front Anti-Scalp Roller
- Two Adjustable Non-Caster Rear Outboard Anti-Scalp Wheels
- Two Adjustable, Castering Front Gauge Wheels with Greaseable Bearings
- Two Adjustable Non Castering Rear Inner Gauge Wheels with Greaseable Bearings
- For older Heritage Models, contact AGCO.
- **Note! If Tractor is equipped with backhoe it must be removed in order to operate mid mount mower**

Order Code	Catalog Number	Description	Approx. Weight (lb.)	List Price
MF1505		**MF1505 BASE MID MOUNT MOWER**		
SSM60 RMF1526ME3	72530243	60" Mower Deck for MF1526 Hydro. . . . . . Includes Mid PTO Kit)		2,849.00

MASSEY FERGUSON®

RESERVED

MF 1705 MID-MOUNT MOWER

MASSEY FERGUSON®

(F.O.B. Port of Entry)

FEATURES

- Mid-Mount Stamped Tunnel Deck
- 72” Cutting Width
- Three (3) Overlapping Offset Blades
- Cutting Height: 2 To 4 Inches
- Lift:
  Parallel Lift Connected to Left Hand 3-Point Lift Arm
  Lift Height Approximately 6”
  Lift Lockup Allows Use of 3-Point with Mower Raised
- Right Hand Hinged Discharge Chute
- Quick Disconnect with Single Handle Front Latch and Two Spring Loaded Pins at Rear
- **Not Compatible with MFDL120 Loader - is Compatible with MFDL125 Loader**
- Mower Fits 1736 4wd Platform Only
- Mid PTO Shaft Drive To Mower Gearbox
- One Center Mounted Front Anti-Scalp Roller
- Two Adjustable Non-Caster Rear Outboard Anti-Scalp Wheels
- Two Adjustable, Castering Front Gauge Wheels with Greaseable Bearings
- Two Adjustable Non Castering Rear Inner Gauge Wheels with Greaseable Bearings
- **Note: If Tractor is equipped with backhoe it must be removed in order to operate mid mount mower**

Order Code	Catalog Number	Description	Approx. Weight (lb.)	List Price
MF1705		**MF1705 BASE MID MOUNT MOWER**		
SSM72 RMF1736ME3	72530399	72" Mower Deck for MF1736 4WD Platform . . . . . (Includes Mid PTO Kit)	492	3,949.00

MASSEY FERGUSON®

RESERVED

MASSEY FERGUSON®

BACKHOES

BACKHOE APPLICATION CHART

MASSEY FERGUSON®

TRACTOR MODEL	CB75 BACKHOE	CB85 BACKHOE
1726E, 1734E, 1739E	Equipped with L105E Loader	
1736 and 1742	Equipped with DL125 Loader	
1749, 1754, 1758, 1759		Equipped with DL135 Loader
2705E and 2706E		Equipped with L135E Loader

COMPATIBILITY CHART

Catalog Number	Description	CB65	CB75	CB85
72533783M	10-inch Bucket with 2 Replaceable Teeth (.57 cu ft)	X	X	
72533784M	12-inch Bucket with 3 Replaceable Teeth (.71 cu ft)	X	X	
72533785M	16-inch Bucket with 3 Replaceable Teeth (.95 cu ft)	X	X	
72533786M	10-inch Bucket with 2 Replaceable Teeth (.81 cu ft)		X	X
72533787M	12-inch Bucket with 3 Replaceable Teeth (1.02 cu ft)		X*	X
72533788M	16-inch Bucket with 3 Replaceable Teeth (1.38 cu ft)		X*	X
72533789M	18-inch Bucket with 3 Replaceable Teeth (1.57 cu ft)		X*	X
72533790M	24-inch Bucket with 4 Replaceable Teeth (2.13 cu ft)		X*	X
72533791M	Stabilizer Rubber Street Pads	X	X	X
72533792M	Mechanical Thumb Kit	X		
72533793M	Mechanical Thumb Kit		X	
72533794M	Mechanical Thumb Kit			X
72533795M	Big Foot Stabilizer Pads	X	X	X

*** Buckets can be mounted on the CB75, but please note that the teeth can contact the boom when curling in the bucket due to the larger capacity.**

MFCB75 BACKHOE

MASSEY FERGUSON®

(F.O.B. TELFORD, TENNESSEE)

FEATURES

- Curved Boom
- 4-Point Subframe Mount
- Easy to Remove Quick Attach Backhoe Frame
- 170 Degree Boom Swing with Rubber Cushion Stops
- Two-Lever Four Way Dig Control
- Twin Cylinder Boom Swing with Hydraulic Cushion
- Cast Iron Bucket Linkage
- Independent Hydraulically Controlled Stabilizers with Transport Locking Pins
- Adjustable Operator's Seat
- Recessed Grease Zerks
- Galvanized Positive Locking Pins
- For MF1726E, 1734E, 1739E, 1736, and 1742 Tractors
- Bolt on Construction Grade Bucket Teeth
- Boom Lock For Transport
- Boom Float Control
- Max Reach: 119.7 inch (3.04 m)
- Stabilizer Spread - Transport: 48.4 inch (1.23 m)
- Stabilizer Spread - Operating: 99.2 inch (2.52 m)
- Angle of Departure: 18 Degrees
- Swing Arc: 170 Degrees
- Bucket Rotation: 174 Degrees
- Shipping Weight: 812 lbs (327 kg)

MODEL	Digging Depth	Transport Height	Loading Height	Digging Force Using Bucket Cylinder	Digging Force Using Dipper Cylinder
1726E/1734E/1739E	95 inches (2.41 m)	73.6 inches (1.87 m)	67.3 inches (1.71 m)	3086 lb (1400 kg)	2017 lb (915 kg)
1736 / 1742	92 inches (2.34 m)	76.4 inches (1.94 m)	70 inches (1.78 m)	3148 lb (1428 kg)	2057 lb (933 kg)

NOTE:

- ***When installing CB75 Backhoe on MF1700 Premium Cab Tractor, the operator may experience limited head room due to cab roof design.***
- *Tractor must be equipped with a front-end loader for stable and satisfactory backhoe operation.*
- *Not intended for industrial use.*
- *Specifications will vary according to tractor and tire sizes used.*
- *Not for 3-Point Hitch use on compact tractor.*
- *Backhoe Mounts are not Compatible with Top and Tilt Kits.*
- *Backhoe must be removed to operate mid mount mower.*

Order Code	Catalog Number	Description	Approx. Weight (lb.)	List Price

For a Complete Backhoe, Select One Order Code from Group 01 and One Catalog Number from Group 02, 03 & 04

BASE MACHINE — Group 01

MFCB75	72533772	Backhoe with Control Valve.	733	6,529.00

SUBFRAME MOUNTING KITS — Group 02

	72533775M	Mounting Kit for CB75 on MF1726E, 1734E, and 1739E Economy Model Tractors with MFL105E Loader	351	1,089.00
	72533776M	Mounting Kit for CB75 on MF1736 and 1742 Premium Model Tractors with MFDL125 Loader	351	1,339.00

HYDRAULICS — Group 03

	72533780M	Power Beyond Kit to Connect CB75 to MF1726E, MF1734E, and MF1739E Economy Model Tractors	9	279.00
	72533781M	Power Beyond Kit to Connect CB75 to MF1736 and MF1742 Premium Model Tractors with Factory Joystick	9	399.00

NOT FOR SALE IN QUEBEC

MFCB75 BACKHOE

MASSEY FERGUSON®

Order Code	Catalog Number	Description	Approx. Weight (lb.)	List Price
BACKHOE BUCKETS				**Group 04**
	72533783M	10-inch Bucket with 2 Replaceable Teeth (.57 cu ft)	56	359.00
	72533784M	12-inch Bucket with 3 Replaceable Teeth (.71 cu ft)	66	409.00
	72533785M	16-inch Bucket with 3 Replaceable Teeth (.95 cu ft)	75	459.00
	MKT0321	Without Backhoe Bucket		No Charge
ACCESSORIES				**Group 05**
	72533791M	Stabilizer Rubber Street Pads	18	139.00
	72533795M	Big Foot Stabilizer Pads	39	129.00
	72533793M	Mechanical Thumb Kit	36	499.00

NOT FOR SALE IN QUEBEC

MFCB85 BACKHOE

MASSEY FERGUSON®

(F.O.B. TELFORD, TENNESSEE)

FEATURES

- Curved Boom
- 4-Point Subframe Mount
- Easy to Remove Quick Attach Backhoe Frame
- 180 Degree Boom Swing with Rubber Cushion Stops
- Two-Lever Four Way Dig Control
- Twin Cylinder Boom Swing with Hydraulic Cushion
- Cast Iron Bucket Linkage
- Independent Hydraulically Controlled Stabilizers with Transport Locking Pins
- Adjustable Operator's Seat
- Recessed Grease Zerks
- Galvanized Positive Locking Pins
- Bolt on Construction Grade Bucket Teeth
- Boom Lock For Transport
- Boom Float Control
- For MF1749, MF1754, MF1758 and MF1759; MF2705E and MF2706E
- Digging Depth: 101.6 inch (2.58 m)
- Max Reach: 130 inches (3.3 m)
- Transport Height: 85.4 inches (2.17 m)
- Stabilizer Spread - Transport: 56 inches (1.42 m)
- Stabilizer Spread - Operating: 119 inches (3.02 m)
- Loading Height: 74 inches (1.88 m)
- Angle of Departure: 20 Degrees
- Swing Arc: 170 Degrees
- Bucket Rotation: 180 Degrees
- Shipping Weight: 853 lbs (387 kg)
- Digging Force Using Bucket Cylinder: 3893 lb (1766 kg)
- Digging Force Using Dipper Cylinder: 2507 lb (1137 kg)

MODEL	Digging Depth	Transport Height	Loading Height	Digging Force Using Bucket Cylinder	Digging Force Using Dipper Cylinder
1749/1754/1758/1759	101.6 inches (2.58 m)	85.4 inches (2.17 m)	74 inches (1.88 m)	3893 lb (1766 kg)	2507 lb (1137 kg)

NOTE:

- ***Category 2 Implements not compatible when the backhoe subframe is installed (impacts these models: 1758/ 1759/ 2705E/ 2706E)***
- ***When installing CB85 Backhoe on MF1700 Premium Cab Tractor, the operator may experience limited head room due to cab roof design.***
- *Tractor must be equipped with a front-end loader for stable and satisfactory backhoe operation.*
- *Not intended for industrial use.*
- *Specifications will vary according to tractor and tire sizes used.*
- *Not for 3-Point Hitch use on compact tractor.*
- *Backhoe Mounts are not Compatible with Top and Tilt Kits.*

Order Code	Catalog Number	Description	Approx. Weight (lb.)	List Price

For a Complete Backhoe, Select One Order Code from Group 01 and One Catalog Number from Group 02, 03 & 04

BASE MACHINE — Group 01

MFCB85	72533773	Backhoe with Control Valve.	1183	7,129.00

SUBFRAME MOUNTING KITS — Group 02

	72533923M	Mounting Kit for CB85 on MF1749, MF1754, and MF1758 Model Tractors with MFDL135 Loader, and MF2700E Model Tractors with MFL135E Loader		1,449.00
	72533924M	Mounting Kit for CB85 on MF1759 Model Tractors with MFDL135 Loader		1,449.00

HYDRAULICS — Group 03

	72533910M	Hydraulic Hose Kit to Connect CB85 to MF2700E Model Tractors		399.00
	72533781M	Power Beyond Kit to Connect CB85 to MF1749/1754/1758 Model Tractors with Factory Joystick or Pedestal Mounted Joystick	13	399.00
	72533782M	Power Beyond Kit to Connect CB85 to MF1759 Model Tractors with Factory Joystick or Pedestal Mounted Joystick	13	399.00

NOT FOR SALE IN QUEBEC

MFCB85 BACKHOE

MASSEY FERGUSON®

Order Code	Catalog Number	Description	Approx. Weight (lb.)	List Price
BACKHOE BUCKETS				**Group 04**
	72533786M	10-inch Bucket with 2 Replaceable Teeth (.81 cu ft)	71	429.00
	72533787M	12-inch Bucket with 3 Replaceable Teeth (1.02 cu ft)	81	459.00
	72533788M	16-inch Bucket with 3 Replaceable Teeth (1.38 cu ft)	94	519.00
	72533789M	18-inch Bucket with 3 Replaceable Teeth (1.57 cu ft)	100	569.00
	72533790M	24-inch Bucket with 4 Replaceable Teeth (2.13 cu ft)	120	769.00
	MKT0321	Without Backhoe Bucket		No Charge
ACCESSORIES				**Group 05**
	72533791M	Stabilizer Rubber Street Pads	18	139.00
	72533795M	Big Foot Stabilizer Pads	39	129.00
	72533794M	Mechanical Thumb Kit	36	829.00

MASSEY FERGUSON®

FRONT MOUNTED

FRONT MOUNTED APPLICATION CHART

MASSEY FERGUSON®

TRACTOR MODEL	2335 2340	1405	1545 1550	2360	1507	1410	2330	1535	1415
	BLADE	FRONT DOZER BLADE		SNOW BLOWER			ROTARY BROOM		
GC1705 GC1715	X			X			X		
GC2400 GC2600	X			X			X		
GC1710 GC1720	X			X			X		
GC2410 TLB GC2610 TLB	X			X			X		
1526, 1528, 1529H, 1531, 1532H 1533, 1540		X				X			X
1547, 1552			X		X			X	
1635, 1736		X				X			X
1643,1648, 1652, 1742, 1749, 1754, 1758			X		X			X	

MF 2335 & 2340 BLADE

MASSEY FERGUSON®

(F.O.B. Port of Entry)

FEATURES

- **MF 2335 Blade (54"):**
- **Fits all GC Series Tractors**
- Quick Hitch System
- Overall width 54", overall height 17.5"
- Length with female hitch 16"
- Blade thickness 11 Ga with security spring
- Reinforcement braces thickness 3/8"
- Reversible cutting edge but not adjustable
- Cutting edge thickness: 3/8"
- Manual angling 0-15-30
- Hydraulic angling not available
- Adjustable skid shoes
- Hydraulic Lift Mechanism Standard

- **MF 2340 Blade (60"):**
- **Fits all GC Series Tractors**
- Quick Hitch System
- Overall width 60", overall height 19"
- Length with female hitch 23"
- Blade thickness 3/16" with security spring
- Reinforcement braces thickness 1/4"
- Reversible cutting edge but not adjustable
- Cutting edge thickness: 1/2"
- Manual angling 0-15-30
- Adjustable skid shoes
- Optional Hydraulic angling (0 to 30 degrees)
- Hydraulic Lift Mechanism Standard

Order Code	Catalog Number	Description	Approx. Weight (lb.)	List Price

For a Complete Blade, Select One Order Code from Group 01 and Catalog Number(s) from Group 02

BASE MACHINE — Group 01

MF2335	8301003	MF2335 54" Std Duty Front Blade **(Requires 8300102M)**	126	579.00
MF2340	8302003	MF2340 60" Heavy Duty Front Blade **(Requires 8300102M)**	303	1,009.00

HYDRAULICS — Group 02

	8302203M	Hydraulic Angle Kit for HD 60" (MF2340) Blade	16	469.00
		See Compact Tractor Section for Hydraulic Valves		
		Note: Tractor must be equipped with hydraulic valve		

ACCESSORIES:

	8300102M	Front Quick Hitch for GC1700 Series Tractors, Includes Male Hitch, Cylinder Hoses and Couplers	81	759.00
	8302202	Rubber Cutting Edge for HD 60" Blade	50	259.00
	8301901	French Operator Manual for 54" Blade		No Charge
	8302901	French Operator Manual for 60" Blade		No Charge

1405 FRONT DOZER BLADE

MASSEY FERGUSON®

(F.O.B. Port of Entry)

FEATURES

- Patented Quick Hitch, Cat B
- Overall Width 66”
- Overall Height 22.5”
- Moldboard Height 21.75”
- Moldboard Thickness .25”
- Cutting Edge: High Carbon Steel, Heat Treated, Double Bevel
- Lifting Mechanism: Hydraulic
- Angling: Mechanical
- Optional Hydraulic Blade Angling
- Front Mount To Fit: MF1526, 1528, 1529, 1531, 1532, 1533, 1540, 1635 and 1736
- **NOTE:**
  To Operate MF1405 Dozer Blade with Manual Angling, Tractor Must have Minimum of One Spool Valve or Auxiliary Joystick.

  To Operate MF1405 Dozer Blade with Hydraulic Angling, Tractor must be Equipped with Two Spool Valve or Auxiliary Valve.
- **To Connect and Operate Loader, Subframe Must be Removed**

Order Code	Catalog Number	Description	Approx. Weight (lb.)	List Price
For a Complete Dozer Blade, Select One Order Code from Group 01 and Catalog Number(s) from Group 02				
BASE MACHINE				**Group 01**
MF1405	4251003	MF1405 Front Dozer Blade With Manual Angling, HD Double Bevel Heat-treated Cutting Edge, HD Skid Shoes, Female Hitch, Trip Springs (**Requires Subframe)**	390	1,189.00
SUBFRAME				**Group 02**
	72530364M	Subframe for MF1736 (Not Compatible with R1 Tires)		1,989.00
	7092102M	Subframe for MF1528H and 1531H	427	1,869.00
	72530245M	Subframe Quick Hitch for MF1526 with L90 Loader Only **(Subject to Availability)**	351	1,289.00
	7092103M	Subframe Front Quick Hitch For all MF1529, 1532, 1533, 1540, and 1635 Tractors **(Subject to Availability)**		1,949.00
ACCESSORIES:				
	4251201M	Hydraulic Angling Kit includes: 1 cylinder, Hoses and Male Quick Couplers	25	569.00
	4251901	French Manual and Decals		No Charge
	7092903M	French Manual (Subframe)		No Charge

*** See Compact Tractor Section for Hydraulic Valves**

MF1545 FRONT DOZER BLADE

MASSEY FERGUSON®

(F.O.B. Port of Entry)

FEATURES

- Patented Quick Hitch, Cat C
- Overall Width 72”
- Overall Height 22 3/8”
- Moldboard Thickness 1/4”
- Cutting Edge: High Carbon Steel, Heat Treated, Double Bevel
- Lifting Mechanism: Hydraulic
- Angling: Hydraulic
- Front Mount To Fit: 1547, 1552, 1643, 1648, 1652, 1742, 1749, 1754, 1758 and 1759
- **NOTE:**

  To Operate MF1545 Dozer Blade Tractor Must be Equipped with Two Spool Valve or Auxiliary Valve.

Order Code	Catalog Number	Description	Approx. Weight (lb.)	List Price
For a Complete Dozer Blade, Select One Order Code from Group 01 and Catalog Number(s) from Group 02				
BASE MACHINE				**Group 01**
MF1545	7582001	MF1545 Front Dozer Blade with Hydraulic Angling. **(Requires a Subframe below)**	540	2,239.00
SUBFRAME				**Group 02**
	72530368M	Subframe for MF1742, 1749, 1754, 1758 and 1759		2,489.00
	7581101M	Subframe for MF1547, 1552, 1643, 1648, and 1652	427	2,139.00
ACCESSORIES:				
	7582901	French Manual		No Charge
	7092904M	French Manual (Subframe)		No Charge

*** See Compact Tractor Section for Hydraulic Valves**

MF 1550 FRONT DOZER BLADE

MASSEY FERGUSON®

(F.O.B. Port of Entry)

FEATURES

- Patented Quick Hitch, Cat C
- Overall Width 84”
- Overall Height 22 3/8”
- Moldboard Thickness 1/4”
- Cutting Edge: High Carbon Steel, Heat Treated, Double Bevel
- Lifting Mechanism: Hydraulic
- Angling: Hydraulic
- Front Mount To Fit: 1547, 1552, 1643, 1648, 1652, 1742, 1749, 1754, 1758 and 1759
- **NOTE:**

  To Operate MF1550 Dozer Blade Tractor Must be Equipped with Two Spool Valve or Auxiliary Valve.

Order Code	Catalog Number	Description	Approx. Weight (lb.)	List Price
For a Complete Dozer Blade, Select One Order Code from Group 01 and Catalog Number(s) from Group 02				
BASE MACHINE				**Group 01**
MF1550	7583001	MF1550 Front Dozer Blade with Hydraulic Angling. (**Requires a subframe below**)	570	2,659.00
SUBFRAME				**Group 02**
	72530368M	Subframe for MF1742, 1749, 1754, 1758 and 1759		2,489.00
	7581101M	Subframe for MF1547, 1552, 1643, 1648, and 1652	427	2,139.00
ACCESSORIES:				
	7583901	French Manual		No Charge
	7092904M	French Manual (Subframe)		No Charge

*** See Compact Tractor Section for Hydraulic Valves**

MF 2360 SNOW BLOWER

MASSEY FERGUSON®

(F.O.B. Port of Entry)

FEATURES

- Fits all GC Series Tractors
- Patented Quick Hitch System
- Overall width 50 3/16" ; Overall height w/o chute 20.5"
- Overall length with female hitch 30.5" (approx.)
- Cutting width 50"/ Cutting height 19 1/8"
- Clockwise rotation
- Auger drive: worm gear box ratio 5:1. Auger Diameter 12 7/8"
- Impeller drive: No.40 chain. Impeller Diameter 15 5/8"
- 2 Shear bolts on auger / 1 shear bolt and 3 blades on impeller
- Adjustable deflector and rear skid shoes
- Two Stage
- Chute position: left / Chute rotation: manual
- Frame thickness: 14 Ga / Side thickness: 11 Ga
- PTO Drive
- Lifting Mechanism - Hydraulic

Order Code	Catalog Number	Description	Approx. Weight (lb.)	List Price

For a Complete Snow Blower, Select One Order Code from Group 01 and Catalog Number(s) from Group 02 and 03

BASE MACHINE — Group 01

MF2360	8300004	MF2360 50" Snow Blower. . . . . 288 Includes Female Hitch, Half Driveline, Chute, Manual Rotation and Reduction **(Requires catalog # 8300102M and 8300201M)** Note: Tractors with Soft Side Cab are not Compatible with Manual Rotation; Catalog # 8300202M Must be Ordered		2,309.00

HYDRAULICS — Group 02

See Compact Tractor Section for Hydraulic Valves

Note: Tractor must be equipped with hydraulic valve

MID PTO DRIVELINE — Group 03

	8300201M	Mid PTO Drive kit. Includes Mid PTO Driveline . . . . . 19 and Half Driveline for Implements and Hardware		619.00

ACCESSORIES:

	8300102M	Front Quick Hitch for GC1700 Series Tractors, ... 81 Includes Male Hitch, Cylinder Hoses and Couplers		759.00
	8302204M	Hydraulic Chute Rotation Kit 8		719.00
	8300202M	Electric Chute Rotation Kit 8		429.00
	8300203M	Electric Chute Deflector Kit. 8		569.00
	8300901	French Manual		No Charge

MF 1410 SNOW BLOWER

MASSEY FERGUSON®

(F.O.B. Port of Entry)

FEATURES

- Patented Quick Hitch, Cat B
- Overall width 63”
- Overall height 53.125”
- Overall height without chute 23.8”
- Drive system: 1885 - 2000 RPM Gearbox in oil
- Driveline Protection: Shear bolt
- 14” diameter auger
- 4 blade blower fan
- Hydraulic lifting mechanism
- Hydraulic Main chute left / right
- Front Mount To Fit: MF1526, 1528, 1529, 1531, 1532, 1533, 1540, 1635 and 1736
- **NOTE:**
  To Operate MF 1410 Snow Blower, Tractor Must Be Equipped with Two Spool Valve or Auxiliary Joystick Valve.

  To Mount MF1410 to Tractor, the Subframe Mounting Kit and Mid PTO Driveline Must Be Ordered. Tractor Must be Equipped with Mid PTO
- **To Connect and Operate Loader, Subframe Must be Removed**

Order Code	Catalog Number	Description		Approx. Weight (lb.)	List Price
For a Complete Snow Blower, Select One Order Code from Group 01 and Order Codes from Group 02 and 03 as Required					
BASE MACHINE					**Group 01**
MF1410	72530257	MF1410 63" Snow Blower. Complete with Oilbath Gear Boxes, 4 Blade Fan, Skid Shoes, Half Driveline, Female Hitch, 2-Part Chute with High Torque Hydraulic Motor, Hoses, and Couplers, Operator Manual. (**Requires Subframe and Mid PTO Driveline)**	547		3,909.00
SUBFRAME					**Group 02**
	72530364M	Subframe for MF1736 (Not Compatible with R1 Tires)			1,989.00
	7092102M	Subframe for MF1528H and 1531H	427		1,869.00
	72530245M	Subframe Quick Hitch for MF1526 **(Subject to Availability)**	351		1,289.00
	7092103M	Subframe Front Quick Hitch For all MF1529, 1532, 1533, 1540, and 1635 Tractors **(Subject to Availability)**			1,949.00
MID PTO DRIVELINE					**Group 03**
	7092207M	Mid PTO Driveline for MF1529, 1532, 1533, 1540, 1635 and 1736 Tractors (No Mid PTO available on MF1532 with 9 x 3 Transmission)	37		799.00
	7092201M	Mid PTO Driveline for MF1528 and 1531 **(Subject to Availability)**	35		759.00
	72530246M	Mid PTO Driveline for MF1526	21		749.00
ACCESSORIES:					
	8300204M	Side Extensions			100.00
	72530259M	3 Part Chute for Blower	40		349.00
	72530260M	Hydraulic Chute Deflector (**Requires 3 Spool Tractor Mount Valve)**	14		329.00
	72530261M	Electric Chute Deflector	8		549.00
	7092901	French Manual			No Charge
	7092903M	French Manual (Subframe)			No Charge

*** See Compact Tractor Section for Hydraulic Valves and Mid PTO kits**

MF 1507 SNOW BLOWER

MASSEY FERGUSON®

(F.O.B. Port of Entry)

FEATURES

- Patented Quick Hitch, Cat BC
- Overall width 74”
- Overall height 27-1/2”
- Driveline Protection: Shear bolt
- 14-3/4” Diameter Auger
- 4 Blade blower fan
- Lifting mechanism: Hydraulic
- Hydraulic Main chute left / right
- Replacement cutting edge and ski shoes
- 2 Part Chute Standard
- Front Mount To Fit: MF1643, 1648, 1652, 1742, 1749, 1754, 1758 and 1759
- **NOTE:**
  To Operate MF 1507 Snow Blower, Tractor Must Be Equipped with Two Spool Valve or Auxiliary Joystick Valve. Tractor must be equipped with Mid PTO.

Order Code	Catalog Number	Description	Approx. Weight (lb.)	List Price
For a Complete Snow Blower, Select One Order Code from Group 01 and Order Codes from Group 02 and 03 as Required				
BASE MACHINE				**Group 01**
MF1507	72530258	MF1507 74" Snow Blower (**Requires Subframe and Mid PTO Driveline)**	586	5,199.00
SUBFRAME				**Group 02**
	72530368M	Subframe for MF1742, 1749, 1754, 1758 and 1759		2,489.00
	7581101M	Subframe for MF1643, 1648, and 1652	427	2,139.00
MID PTO DRIVELINE				**Group 03**
	7581102M	Mid PTO Driveline for MF1643, 1648, 1652, 1742, 1749, 1754, and 1758	37	809.00
ACCESSORIES:				
	8300205M	Side Extensions		100.00
	72530259M	3 Part Chute For Blower	40	349.00
	72530260M	Hydraulic Chute Deflector (**Requires 3 Spool Tractor Mount Valve)**	14	329.00
	72530261M	Electric Chute Deflector	8	549.00
	7581901	French Manual		No Charge
	7092904M	French Manual (Subframe)		No Charge

*** See Compact Tractor Section for Hydraulic Valves**

MF 2330 ROTARY BROOM

MASSEY FERGUSON®

(F.O.B. Port of Entry)

FEATURES

- Fits all GC Series Tractors
- Patented Quick Hitch System
- Overall width: 47-3/8"
- Height without broom: 11-3/8". Height with broom: 18-3/8"
- Length with female hitch: 42" (approx.)
- Broom Diameter: 18". Broom Length: 43.25"
- Manual angling, 0-12, 5-25 degrees
- Working width at maximum angle (39-3/16")
- PTO Drive
- Reduction ratio 2.78:1
- Broom Drive - No. 40 chain
- Frame thickness: 14 Ga
- Lift Mechanism - Hydraulic

Order Code	Catalog Number	Description	Approx. Weight (lb.)	List Price
For a Complete Rotary Broom, Select One Order Code from Group 01 and Catalog Number(s) from Group 02 and 03				
BASE MACHINE				**Group 01**
MF2330	8303003	MF2330 47" Rotary Broom Includes Female Hitch, Half Driveline, Manual Angling, Polypropylene Brush and Parking Stands. **(Requires catalog # 8300102M and 8300201M)**	310	2,739.00
HYDRAULICS				**Group 02**
		See Compact Tractor Section for Hydraulic Valves *Note: Tractor must be equipped with hydraulic valve*		
MID PTO DRIVELINE				**Group 03**
	8300201M	Mid PTO Drive Kit. Includes Mid PTO Driveline and Half Driveline for Implements and Hardware	19	619.00
ACCESSORIES:				
	8300102M	Front Quick Hitch for GC1700 Series Tractors, Includes Male Hitch, Cylinder Hoses and Couplers	81	759.00
	8303202	Dethatching Wheel Kit (For use on S/N: RP252001 and up)	30	319.00
	8303901	French Operator Manual		No Charge

MF 1415 ROTARY BROOM

MASSEY FERGUSON®

(F.O.B. Port of Entry)

FEATURES

- Patented Quick Hitch, Cat B
- Overall Width 61”
- Overall Height 23.5”
- Rotation 194 - 206 RPM
- Brush Diameter 22”
- Sweeping Width - Straight 54.5”
- Sweeping Width - @ 25 Degrees 49”
- Drive System Gearbox in oil
- Lifting Mechanism: Hydraulic
- Angling: Mechanical
- Optional Hydraulic Angling
- Frame Thickness 14 Gauge
- Polypropylene Brush
- Front Mount To Fit: MF1526, 1528, 1529, 1531, 1532, 1533, 1540, 1635 and 1736
- **NOTE:**
  To Operate MF 1415 Rotary Broom Tractor Must Be Equipped with Two Spool Valve or Auxiliary Joystick Valve.

  To Mount MF1415 to Tractor, the Sub Frame Mounting Kit and Mid PTO Driveline Must Be Ordered.
- **Tractor Must be Equipped with Mid PTO**
- **To Connect and Operate Loader, Sub Frame Must be Removed**

Order Code	Catalog Number	Description	Approx. Weight (lb.)	List Price
For a Complete Rotary Broom, Select One Order Code from Group 01 and Catalog Number(s) from Group 02 and 03				
BASE MACHINE				**Group 01**
MF1415	4252003	MF1415 61" Rotary Broom Hydraulic Lift, Manual Angle, Female Hitch, 1/2" Driveline. (**Requires Subframe and PTO Driveline)**	494	3,469.00
SUBFRAME				**Group 02**
	72530364M	Subframe for MF1736 (Not Compatible with R1 Tires)		1,989.00
	7092102M	Subframe for MF1528H and 1531H	427	1,869.00
	72530245M	Subframe Quick Hitch for MF1526 with L90 Loader Only **(Subject to Availability)**	351	1,289.00
	7092103M	Subframe Front Quick Hitch For all MF1529, 1532, 1533, 1540, and 1635 Tractors **(Subject to Availability)**		1,949.00
MID PTO DRIVELINE				**Group 03**
	7092207M	Mid PTO Driveline for MF1529, 1532, 1533, 1540, 1635 and 1736 Tractors (No Mid PTO available on MF1532 with 9 x 3 Transmission)	37	799.00
	7092201M	Mid PTO Driveline for MF1528 and 1531 **(Subject to Availability)**	35	759.00
	72530246M	Mid PTO Driveline for MF1526 with L90 Loader Only	21	749.00
ACCESSORIES:				
	4252201M	Hydraulic Angling Kit	11	529.00
	4252102M	6” X 2” Side Caster Wheel	48	449.00
	4252101M	50/50 Wire / Poly Broom	126	659.00
	4252901	French Manual		No Charge
	7092903M	French Manual (Subframe)		No Charge

***See Compact Tractor section for Hydraulic Valves and MID PTO kits.**

MF 1535 ROTARY BROOM

MASSEY FERGUSON®

(F.O.B. Port of Entry)

FEATURES

- Patented Quick Hitch, Cat C
- Overall Width 72”
- Overall Height 31”
- Rotation Counterclockwise
- Brush Diameter 22”

- Sweeping Width - 66-1/2”
- Drive System Gearbox in oil
- Polypropylene Brush
- 1 Front Mounted, 12x3 support wheel
- Lifting Mechanism: Hydraulic
- Hydraulic Angling

- Front Mount To Fit: MF1547, 1552, 1643, 1648, 1652, 1742, 1749, 1754, 1758 and 1759

- **NOTE:**
  To Operate MF 1535 Rotary Broom, Tractor Must Be Equipped with Two Spool Valve or Auxiliary Valve.

  To Mount to the tractor, the Mid PTO Driveline must be ordered and tractor must be equipped with MID PTO.

Order Code	Catalog Number	Description	Approx. Weight (lb.)	List Price
For a Complete Rotary Broom, Select One Order Code from Group 01 and Catalog Number(s) Group 02 and 03				
BASE MACHINE				**Group 01**
MF1535	7584002	MF1535 72" Rotary Broom (**Requires Subframe and PTO Driveline)**	537	4,239.00
SUBFRAME				**Group 02**
	72530368M	Subframe for MF1742, 1749, 1754, 1758 and 1759		2,489.00
	7581101M	Subframe for MF1547, 1552, 1643, 1648, and 1652	427	2,139.00
MID PTO DRIVELINE				**Group 03**
	7581102M	Mid PTO Driveline for MF1547, 1552, 1643, 1648, 1652, 1742, 1749, 1754, and 1758	37	809.00
ACCESSORIES:				
	4252102M	6” X 2” Side Caster Wheel	48	449.00
	7584902M	50/50 Wire / Poly Broom	65	659.00
	7584901	French Manual		No Charge
	7092904M	French Manual (Subframe)		No Charge

*** See Compact Tractor Section for Hydraulic Valves**

MASSEY FERGUSON®

3-POINT REAR MOUNTED

3-PT REAR MOUNTED APPLICATION CHART

MASSEY FERGUSON®

TRACTOR MODEL	Rated PTO HP	1680 - 80"	1692 - 92"
	SNOW BLOWER		
MF4607M	72 (53.7)	X	
MF4609M	89.8 (66.9)	X	
MF4610M	80 (59.7)	X	X
MF4707	57	X	
MF4708	68 (50.7)	X	
MF4709	78 (58.1)	X	
MF4710	88 (65.6)	X	X
MF5711SL	110		X
MF5712SL	120		X
MF5713SL	130		X
MF5710	100		X
MF5711	110		X
MF6712	120		X
MF6713	130		X

MF 1680 SNOW BLOWER

MASSEY FERGUSON®

(F.O.B. Port of Entry)

FEATURES

- Tractor Compatibility:
  - All MF4600M Series Models
  - All MF4700 Series Models
- Overall Dimensions:
  - Working Width: 80.5 inches (205 cm)
  - Working Height: 31 inches (76 cm)
  - Working Length: 49 inches (125 cm)
- Auger:
  - Single
  - Diameter - 20 inches (51 cm)
- Impeller
  - 4 Blades
  - 540 RPM
  - Diameter - 26 inches (66 cm)
  - Width - 10.5 inches (27 cm)
- Skid Shoes:
  - High-Carbon Steel
  - Adjustable
  - Replaceable
- Cutting Edge:
  - High-Carbon Steel
  - Replaceable
  - Reversible
  - Dimensions - 1/2 in x 3 in (1.3 cm x 7.6 cm)
- Chute:
  - Position - Left
  - 3-Part Chute
  - Hydraulic Chute Rotation
  - Hydraulic Chute Deflector

Order Code	Catalog Number	Description	Approx. Weight (lb.)	List Price
For a Complete Snow Blower, Select One Order Code from Group 01 and Options from Group 02				
BASE MACHINE				**Group 01**
MF1680	72530472	MF1680 80-inch Commercial Snow Blower	1250	6,300.00
ACCESSORIES				**Group 02**
	72530476M	Drift Cutter	27	125.00
	72530477M	Hardened Steel Cutting Edge	31	239.00
	72530480M	Hardened Steel Skid Shoes	19	264.00

MF 1692 SNOW BLOWER

MASSEY FERGUSON®

(F.O.B. Port of Entry)

FEATURES

- Tractor Compatibility:
  MF4610M, 4710
  All MF5700 & 6700 Global Series Models
  All 5700SL Series Models
- Overall Dimensions:
  Working Width: 92.5 inches (236 cm)
  Working Height: 41 inches (104 cm)
  Working Length: 61 inches (155 cm)
- Auger:
  Single
  Diameter - 23 inches (58 cm)
- Impeller
  4 Blades
  540 RPM
  Diameter - 30 inches (76 cm)
  Width - 12 inches (31 cm)
- Skid Shoes:
  High-Carbon Steel
  Reversible
  Replaceable
- Cutting Edge:
  Hardened Steel
  Reversible
  Replaceable
  Dimensions - 1/2 in x 5 in (1.3 cm x 12.7 cm)
- Chute:
  Position - Right
  3-Part Chute
  Hydraulic Chute Rotation
  Hydraulic Chute Deflector

Order Code	Catalog Number	Description	Approx. Weight (lb.)	List Price
For a Complete Snow Blower, Select One Order Code from Group 01 and Options from Group 02				
BASE MACHINE				**Group 01**
MF1692	72530473	MF1692 92-inch Commercial Snow Blower	2255	9,065.00
ACCESSORIES				**Group 02**
	72530482M	Drift Cutter	50	270.00
	72530484M	Secondary Auger Kit, Includes 14-inch Diameter Auger and Hardware	208	1,080.00
	72530486M	Serrated Main Auger Kit	280	2,065.00

MASSEY FERGUSON®

RESERVED

MASSEY FERGUSON®

HARVEST

MASSEY FERGUSON TABLE OF CONTENTS

COMBINES

MF9545 T4F 4
MF9545 T4F Field Installed 11

MF9565 T4F 14
MF9565 T4F Field Installed 21

HEADERS

MF3300 Corn Head (Non-Chopping) 24

MF3300 Corn Head (Chopping) 25

MF4300 Pick-Up Head 28

MF8200 Flex Head 30

MF9255 Dynaflex® Draper Head 29

MASSEY FERGUSON®

MF9545 T4F Combines

MF 9545

MASSEY FERGUSON®

STANDARD EQUIPMENT
F.O.B. Hesston, Kansas
Serial No. From AGCM95450HHC07101

FEEDING SYSTEM
- Grain Model - Fixed Speed Header Drive
- Corn/Soybean Model - Variable Speed Header Drive
- Smartrac™ Lateral Tilt System
- Single Point Multi-Coupler Hydraulic/Electric Connection
- Quick Attach Header Hook-Up with One Point Latching System
- 4 Strand Feed Conveyor with Offset Slats and Premium Chain
- Electric Header Drive Clutch
- Electro Hydraulic Feed Conveyor and Header Reverser
- Full Width, Dump Style Stone Trap
- Multi-Zone Feed Housing
- Single Speed Feed Drum

THRESHING AND SEPARATING SYSTEM
- Single Rotor Design
- Rotor: 31.5 in. (800 mm) Diameter; 140 in. (3,566 mm) Length
- Intake - Two sets of Intake Flighting
- Threshing - Four Overlapping Helical Rows of Segmented Threshing Elements (28 Elements)
- Separation - Two overlapping Helical Rows of Aggressive Threshing Elements (10 Elements) Two Overlapping Helical Rows of Interchangeable Separator Tines and Separator Paddles (14 Tines and 4 Paddles)
- Discharge - Two Discharge Paddles
- Mechanical Driven Rotor with 2 Speed Gearbox
- Rotor Speed Infinitely Variable:
- Low 264 - 709 rpm, High 460 to 1235 rpm
- Separator Reverser Operated from C2100 Terminal
- Four Concave Cover Plates Including Attaching Hardware
- Threshing and Separator System with Removable Concave and Separator Grate Deflectors
- 61.8 in. (1,570 mm) Wide Reciprocating Return Pan
- Upper Separator Cover Doors
- Concave Area: 2,115 in² (1.36 m²)
- Separating Area: 3420 in² (2.2 m²)
- **Grain Model** - Small Wire Grain Concave, Set of 10 Smooth Rasp Bars in Toolbox, 0.41 in.(10.4 mm) Wire Spacing and 6 Removable Concave Interrupter Plates
- **Corn/Soybean Model** – Round Bar Concave, 0.63 in (16 mm) Bar Spacing, 2 Large Wire Concaves Included in Toolbox on Corn Machines with Round Bars

CLEANING SYSTEM
- 61.8 in. (1,570 mm) Wide Cleaning System with Hydraulically Driven Variable Fan Speed and Fan Housing Shield
- Fan Speeds: 100 rpm – 1350 rpm
- Pneumatic Cleaning Area: 9,455 in2 (6.10 m2)
- 61 in. (1,560 mm) Wide Counterbalanced Cleaning Shoe
- **Grain Model**
  Chaffer - 1 1/8 in. (29 mm) Spacing, 7/8 in. (22 mm) Vane
  Sieve - 1 1/8 in. (29 mm) Spacing, 7/16 in. (11 mm) Vane
- **Corn/Soybean Model**
  Chaffer -1 5/8 in. (41 mm) Spacing, 1 1/4 in. (32 mm) Vane
  Sieve - 1 5/8 in. (41 mm) Spacing, 7/8 in. (22 mm) Vane
- Electric Chaffer and Sieve Adjustment
- Transmission Leaf Screens
- Rolling Leaf Screen Under Feeder House

GRAIN HANDLING SYSTEM
- 350 Bushel (12,334L) Hopper Style Center-Fill Grain Tank with Solid Flip-Up Extensions
- Proportional Electro-Hydraulic Swing Unloader Tube
- 21 ft Auger with Replaceable end Tube and Auger Section
- Clean Grain Elevator with Roller Chain
- Cross Auger Clean Out Doors
- Tailings Volume Sensor
- Grain Sample Inspection Door
- Chrome Augers Including Clean Grain, Tailings, Grain Tank Cross, and Unloading Auger

POWER SYSTEM
- AGCO POWER™ 98 AWF Seven Cylinder, Dual Stage Wastegate, Turbo Charged and Inter-Cooled Diesel Engine
- **Tier 4F Compliant** - SCR Emissions Technology, Cooled External EGR
- **9545**
  Rated: 375 HP (280 kW) @ 2100 rpm
  Max Boost: 451 HP (336 kW) @ 1,950 rpm
- Belt driven Aspirated Pre-Cleaner
- 230 gal (870 L) Fuel Tank
- 24 gal (91 L) DEF Tank
- Battery Disconnect Switch

MASSEY FERGUSON®

MF 9545

STANDARD EQUIPMENT
F.O.B. Hesston, Kansas
Serial No. From AGCM95450HHC07101

HYDRAULIC SYSTEM
- Closed Center Load Sensing Hydraulic System with Variable Displacement Pump, 33.8 gpm (128 Lpm)
- Electric over Hydraulic Control of Header Raise and Lower Reel Raise and Lower, Unloader System
- Feeder and Header Reverser Including Reel Reversing (Variable Header Drive, if Equipped)
- Two 3.5 in. (89 mm) Diameter Header Lift Cylinder
- Header Suspension Accumulator
- Additional Hydraulic Outlet

DRIVE/PROPULSION SYSTEM
- Two-Speed Hydrostatic Drive with Four Speed Transmission, 0 to 22.7 mph (0-36.5 km/h)
- Individual, Hydraulic Actuated, Inboard Drum Type Brakes
- Adjustable Steering Axle with Dual Steering Cylinders
- S42 Final Drives

OPERATOR STATION
- Easy Access Cab Platform with Protective Railing and Power Swivel Ladder
- Automatic Climate Control
- Three High Capacity Air Filters
- Tilt and Telescope Hydrostatic Power Steering Column
- Operator Foot Rests
- Automatic Header Height Control (AHHC) with Return to Cut Feature
- Electric Concave Adjustment
- Hydraulic Reel or Pick-Up Drive with Electronic Speed Controller with Manual and Automatic Modes
- Ergonomic Arm Rest and Controls
- Enhanced Cab Interior
- Two Electronically Adjustable Rear View Mirrors, Two Adjustable Wide Angle Mirrors
- High-Back Air Ride Seat with Armrests, Adjustable Backrest, Lumbar Support, Fore and Aft Seat, Height Adjustment and Weight Adjustment
- Large Cushioned Instructor Seat and Storage Compartment
- C2100 12.1" Color Touch Screen Terminal
- AM/FM, CD, MP3, Weatherband Radio with In-Cab Speakers (Satellite Ready)
- Hand Operated Parking Brake
- Right Hand Service Platform
- Operator's Manual

LIGHTS
- Interior Cab Lights
- Left Row Finder/Cab Egress Light
- Eight Adjustable Halogen Headlights
- Two LED Extremity and After-Cut Lights
- LED Unload Auger Light
- Two LED Grain Tank Lights
- Service Lights
- Four Flashing Amber Warning Lights
- Two Rotary Beacon Lights
- Two LED Brake and Tail Lights
- Right Row Finder Light
- LED Shoe Light

PRECISION AG SYSTEM
- Fieldstar® II Yield Monitoring System with 1 Hz WAAS DGPS Receiver
- FarmWorks™ View Software
- Grain Loss Monitor System
- AGCOMMAND™ Advanced (1 Year Subscription) Must be Activated within 12 months of Warranty Registration
- Auto-Steering Ready – Includes Steering Valve, Roof Mounting Plate and Integrated Steering Angle Sensor
- C2100 12.1" Touch Screen Terminal

MISCELLANEOUS
- E-Coat Primer with Powder Paint
- Safety Shielding and SMV Emblem
- Lubrication Decals
- Back-Up Alarm
- Truck Tie Down
- Greaseless Idlers
- Tool Storage Box
- New Paint Scheme and Decals

Class 7 & 8 Axial Recommended Configurations		
Option Category	**Corn Version** **Order Code and Description**	**Grain Version** **Order Code and Description**
Header Drive	(C702) Variable Speed Header Drive	(C701) Fixed Speed Header Drive
Chaffer	(C103) Corn Adjustable Chaffer	(C102) Grain Adjustable Chaffer
Concaves	(3C04) Round Bar Concaves	(3C03) Small Wire Concaves
Sieve	(9C02) Corn Sieve 1.62" Shallow Tooth (.875"/22 mm vane)	(9C01) Grain Sieve
Grain Bin	(HP03) 350 Bushel (12.3L) Powerfold Grain Bin	(HP03) 350 Bushel (12.3L) Powerfold Grain Bin
Unloading Tube	(C221) 24 ft (7.3M) Unloading Tube	(C221) 24 ft (7.3M) Unloading Tube
Powered Grain Saver	(UR02) Powered Grain Saver for 24' Unloading Tube	(UR02) Powered Grain Saver for 24' Unloading Tube
Straw Disposal System	(C403) MAV Straw Chopper	(C403) MAV Straw Chopper
Operator Seat	(AE13) Deluxe Seat	(AE13) Deluxe Seat
Radio	(A504) AM/FM CD, MP3, Bluetooth, Weatherband Radio	(A504) AM/FM CD, MP3, Bluetooth, Weatherband Radio
Video Option	(BA022) 4 Camera Ready with AgCam 9" Quad Monitor & Bracket	(BA022) 4 Camera Ready with AgCam 9" Quad Monitor & Bracket
Lighting Option	(VL01) NightBlaze Lighting Package	(VL01) NightBlaze Lighting Package
Front Ladder	(A401) Power Swivel Front Ladder	(A401) Power Swivel Front Ladder
Steer Tires (Adj Axle)	(P102-C157 or P104-C134) 600/70R30 R1W Firestone or 620/75R26 R1W Michelin	(P102-C146 or P104-C146) 750/65R26 (28L-R26) R1W (Firestone or Michelin)
Steer Tires (RWA)	(P102-C148 or P104-C141) 600/70R30 R1W Firestone or 620/75R26 R1W Michelin	(P102-C147 or P104-C147) 750/65R26 (28L-R26) R1W (Firestone or Michelin)
Drive Tires	(P102-C015) 520/85R42 (20.8R42) R1W (Firestone or Michelin)	(P102-C015) 520/85R42 (20.8R42) R1W (Firestone or Michelin)
Auto-Steering	(TX06) Auto-Guide™ 3000 Sub-Meter Auto-Steering	(TX06) Auto-Guide™ 3000 Sub-Meter Auto-Steering
Field Installed Kits	(700960060) Large Wire Concaves (Qty: 6)	(700960060) Large Wire Concaves (Qty: 6)
AGCO Parts	TBD Perforated Concave Overlap Panel	(700744451) Reverse Bar (1 pair)

Order Code	Catalog Number	Description	Approx. Weight (lb.)	List Price

ONE ORDER CODE FROM EACH BOX MUST BE SPECIFIED (except as noted)

COMBINE MODEL - REQUIRED — **BLOCK 01**

A103	71475411	MF9545G Grain Model	38693	433,342.00
A104	71475413	MF9545C Corn/Soybean Model.	38693	433,509.00

HEADER DRIVE - REQUIRED — **BLOCK 140**

Corn/Soybean				
C702	71474023	Variable Speed Header Drive	420	In Base
C701	71472714	Fixed Speed Header Drive	336	(1,845.00)
Grain				
C701	71472714	Fixed Speed Header Drive.	336	In Base
C702	71474023	Variable Speed Header Drive	420	1,863.00

FACTORY INSTALLED CONCAVES - REQUIRED — **BLOCK 180**

Corn/Soybean			
3C04	71473029	Round Bar Concaves. (Option Includes 2 Large Wire Concaves Shipped Loose)	In Base
3C05	71473026	Large Wire Concaves	No Charge
Grain			
3C03	71473027	Small Wire Concaves.	In Base
3C05	71473026	Large Wire Concaves	No Charge

CHAFFER - REQUIRED — **BLOCK 55**

C102	C0814023	Grain Adjustable Chaffer	In Base
C103	C0814033	Corn/Soybean Adjustable Chaffer	No Charge

SIEVES - REQUIRED — **BLOCK 175**

9C01	C0814024	Grain Sieve (Standard on Grain Version)	In Base
9C02	C0814037	Corn Sieve 1.62" Shallow Tooth (.875"/22 mm vane) (Standard on Corn Version)	In Base
9C03	C0814035	Corn Sieve 1.12"	No Charge

SIEVE AND CHAFFER ADJUSTMENT - REQUIRED — **BLOCK 40**

E401	C0814011	Electric Sieve and Chaffer Adjustment.	In Base
E400	C0814012	Manual Sieve and Chaffer Adjustment.	(1,245.00)

SEGMENTED FEED DRUM — **BLOCK 215**

BR01	71476050	Single Speed Feed Drum. For use in High MOG Crops such as Wheat or Canola	In Base
BR02	71476075	2-Speed Feed Drum For use in Low MOG, Delicate Grain Crops for Improved Grain Quality such as Edible Beans or Corn	5,299.00

GRAIN BIN - REQUIRED — **BLOCK 100**

HP02	71484442	350 Bushel (12.334L) Grain Bin.	In Base
HP03	C0862430	350 Bushel (12.334L) Powerfold Grain Bin	5,549.00

UNLOADING TUBE - REQUIRED — **BLOCK 110**

C220	C0864303	21 Ft. Unloading Tube	In Base
C221	C0864304	24 Ft. Unloading Tube	551.00

UNLOADING SPOUT - OPTIONAL — **BLOCK 205**

UR01	71473099	Powered Grain Saver for 21' Unloading Tube	886.00
UR02	71473092	Powered Grain Saver for 24' Unloading Tube	886.00

MASSEY FERGUSON®

Order Code	Catalog Number	Description	Approx. Weight (lb.)	List Price
STRAW DISPOSAL SYSTEM - REQUIRED				**BLOCK 240**
C403	71440351	MAV Straw Chopper	970	In Base
C402	71440355	Straw Spreader - Dual Mechanical	500	(3,040.00)
WINDROW ATTACHMENT				**BLOCK 255**
BM01	71455377	Windrow Kit		598.00
CHAFF DISPOSAL SYSTEM - OPTIONAL				**BLOCK 250**
BP01	71455378	Chaff Spreader - Dual Hydraulic (Recommended for Soybeans)	265	5,326.00
OPERATOR SEAT - REQUIRED				**BLOCK 25**
AE10	71449515	Standard Seat		In Base
AE13	71460433	Deluxe Seat, Gray Fabric with Leather Side Bolsters, Heating and Cooling		1,550.00
RADIO - REQUIRED				**BLOCK 50**
A504	71448062	AM/FM, CD, MP3, Bluetooth, Weatherband Radio (Satellite Ready)	15	In Base
A501	71393289	Less Radio		(366.00)
VIDEO OPTIONS - OPTIONAL				**BLOCK 160**
BA021	71451041	2 Camera Ready, USB Converter for Display on C2100		465.00
BA022	71471742	4 Camera Ready with AgCam® 9" Quad Monitor and Mounting Bracket		810.00
		Cameras and Extension Cables are not included - Order BC2K (2 Camera & Cable Kit) or BC4K (4 Camera & Cable kit) from AGCO Parts		
		Note: With factory installed option, cameras and cables will not be routed through the machine, this must be done after cameras are purchased through AGCO Parts		
LIGHTING - OPTIONAL				**BLOCK 170**
VL01	71465462	NightBlaze™ Lighting Package Includes Upgrade of 4 HID Cab Roof Lights, LED Row Finder Light (Right Hand) Plus 2 additional LED Header Extremity Lights		3,413.00
FRONT LADDER - REQUIRED				**BLOCK 30**
A401	C0855114	Power Swivel Front Ladder		In Base
A403	C0855212	Powerfold Front Ladder		No Charge
STEERING AXLE - REQUIRED				**BLOCK 10**
A201	C0885420	Adjustable Axle		In Base
A202	C0885410	Rear Wheel Assist Axle	600	25,220.00

Order Code	Catalog Number	Description	Approx. Weight (lb.)	List Price
STEERING TIRES - REQUIRED				**BLOCK 65 & 70**
P997-C997	71398237	Less Steering Tires		(5,001.00)
For Heavy Duty Adjustable Axle				
P102-C159	71445529	23.1R26 R1 Firestone®		In Base
P102-C157	71445527	600/70R30 162 A8 R1W Firestone®		1,122.00
P104-C134	71419366	620/75R26 (23.1-R26) 166 A8 R1W MICHELIN® Megaxbib™	1148	577.00
P102-C146	71440290	750/65R26 (28L-R26) 166 R1W Firestone®		890.00
P104-C146	71419360	750/65R26 (28L-R26) 166 A8 R1W MICHELIN® Megaxbib™	1420	1,179.00
For Rear Wheel Assist Axle				
P102-C160	71445530	23.1R26 R1 Firestone®		In Base
P102-C158	71445528	600/70R30 162 A8 R1W Firestone®		1,122.00
P104-C141	71419369	620/75R26 (23.1-R26) 166 A8 R1W MICHELIN® Megaxbib™	1142	577.00
P102-C147	71440291	750/65R26 (28L-R26) 166 R1W Firestone®		890.00
P104-C147	71419363	750/65R26 (28L-R26) 166 A8 R1W MICHELIN® Megaxbib™	1418	1,179.00

DRIVE TIRES - REQUIRED				**BLOCK 75 & 80**
P997-C997	71398236	Less Drive Tires		(11,614.00)
Single Drive Tires - Includes 4 in. (100mm) Deck Extension				
P102-C071	71477463	900/60R32 176 A8 R1 Firestone®		In Base
P104-C058	71477459	900/60R32 176 A8 R1W MICHELIN® Megaxbib™	2464	1,345.00
Dual Drive Tires - Includes 25 in. (635mm) Deck Extension				
P102-C008	71402113	20.8R42 ** R1 Firestone®		5,660.00
P102-C015	71440287	520/85R42 (20.8R42) 157 R1W Firestone®		6,289.00
P104-C015	71419378	520/85R42 (20.8R42) 157 A8 R1W MICHELIN® Agribib™	3804	8,450.00
P102-C004	71400261	20.8R38 R1 Firestone®		7,549.00
P104-C013	71419075	620/70R38 MICHELIN®		13,543.00
P102-C077	71478764	620/70R42 (23.1R42) 160 R1W Firestone®		10,995.00
P104-C077	71426085	620/70R42 (23.1R42) 166 A8 R1W MICHELIN® Magaxbib™		14,683.00

Note: 71478764 or 71426085 Duals Recommended for Grain Headers Larger than 35' and Corn Heads Larger than 8 Row

Order Code	Catalog Number	Description	Approx. Weight (lb.)	List Price
SHIPPING WHEELS - REQUIRED				**BLOCK 85**
C997	71373046M	Less Shipping Wheels		In Base
P102-C999	71394027M	Shipping Wheels . . . . . (Returnable for Full Credit)	920	4,371.00
AUTO-GUIDE™ 3000 AUTO-STEERING - OPTIONAL				**BLOCK 60**
TX06	71482384	Auto-Guide™ 3000 Sub-Meter Auto-Steering . . . . . (Includes: Roof Plate, Remote Antenna, and Pigtail Harness) Displays in Existing C2100 Terminal		6,095.00
NAME PLATE - OPTIONAL				**BLOCK 35**
Z101	71402198	Personalized Name Plate		274.00
YIELD MONITOR - OPTIONAL				**BLOCK 195**
GH01	71473097	Standard Yield Monitor Ready		In Base
GH02	71473098	Yield Monitor, AG Leader.		3,156.00

Note: AG Leader Ready option includes moisture sensor, yield sensor, moisture module, speed module, and cables installed from the factory. It DOES NOT include the AG Leader Display.
The display will need to be purchased from an AG Leader dealer.
Please visit this link to identify AG Leader Dealers http://www.agleader.com/dealers/

OPTIONS INSTALLED AT FACTORY - PRIOR TO SHIPMENT

71427860M	Ship Safe Preservative Coating . . . . . (Mandatory for Shipments November 15 - April 1)		604.00
C0850010M	Auto Lubrication System		6,542.00

Order Code	Catalog Number	Description	Approx. Weight (lb.)	List Price

IF MARKED 'ORDER FROM PARTS' PLEASE ORDER FIELD INSTALLED ACCESSORIES THROUGH THE AGCO PARTS DIVISION. CONSULT THE PARTS ORDERING SYSTEM USING ONEAGCO SOLUTIONS-ONLINE TO DETERMINE CURRENT AVAILABILITY AND PRICING. FOR TECHNICAL ASSISTANCE CALL THE AGCO PARTS GROUP.

THRESHING AND SEPARATING SYSTEM

700959255M	Separator Paddle Kit (Qty 4)		190.00
700960059M	Small Wire Concaves Kit (Qty 6)		1,478.00
700960060M	Large Wire Concaves Kit (Qty 6)		1,200.00
700960061M	Round Bar Concaves Kit (Qty 6)		1,381.00
700960063M	Separator Finger Grate Kit (Qty 6)		1,651.00
700960064M	Separator Bar and Wire Grates Kit (Qty 6)		1,930.00
700960726M	Concave Interruptor Bars (Qty 6)		141.00

CLEANING SYSTEM

700962441M	Perforated Elevator Doors	12	404.00
700959183M	Grain Chaffer/Sieve Package	188	2,126.00
700959188M	Corn/Soybean Chaffer 1.12" Sieve Package		2,040.00
700959187M	Corn Chaffer/1.62" Deep Tooth (32 mm) Sieve Package	183	2,126.00
71378013	Air Foil Chaffer Divider Kit		194.00
71486087M	Electric Sieve and Chaffer Adjustment		1,256.00
700950616M	Airfoil Chaffer		1,531.00
700962442M	Edible Bean Cleaning Kit		604.00
700959556M	Return Pan Extension.		177.00
700962866M	Risers, Side Hill - Chaffer	24	315.00

GRAIN HANDLING SYSTEM

700959195M	Unloading Tube Extension (For Conversion for 21-24 Ft. Unloading Tube Only)		1,183.00
700963068M	350 Bushel Powerfold Grain Bin Extension		8,475.00

CROP RESIDUE DISPOSAL SYSTEM

700959539M	MAV Straw Chopper	835	7,907.00
700959538M	Straw Spreader	450	4,842.00
700959541M	Chaff Spreader (Recommended for Soybeans).	265	6,889.00
700959540M	Windrow Kit		663.00

STEERING AXLE

71485362M	Rear Wheel Assist Axle		33,384.00

FEEDING SYSTEM

700962519M	2-Speed Segmented Feed Drum Compatible with Model Year 2013 and Newer Combines		5,999.00

MF 9545 FIELD INSTALLED

MASSEY FERGUSON®

Order Code	Catalog Number	Description	Approx. Weight (lb.)	List Price

IF MARKED 'ORDER FROM PARTS' PLEASE ORDER FIELD INSTALLED ACCESSORIES THROUGH THE AGCO PARTS DIVISION. CONSULT THE PARTS ORDERING SYSTEM USING ONEAGCO SOLUTIONS-ONLINE TO DETERMINE CURRENT AVAILABILITY AND PRICING. FOR TECHNICAL ASSISTANCE CALL THE AGCO PARTS GROUP.

OPERATOR STATION

	Ladder Deck Extension		
71402014	4 in. (100 mm) Deck Extension	30	420.00
700957915M	12 in. (305 mm) Deck Extension	75	834.00
700957914M	25 in. (635 mm) Deck Extension	154	1,183.00
	Accessories		
71465455M	High Definition Lighting (Includes 2 HID Cab Roof Lights and Ballast)		1,517.00
71471027M	NightBlaze™ Lighting Package (Includes 4 HID Cab Roof Lights, LED Row Finder Light (Right Hand), 2 LED Header Extremity Lights and Brackets Fits 2009 and Newer 9005 and 9500 Series)		3,927.00
700959069M	AM/FM, CD, MP3, Weatherband Radio. (Satellite Ready)		798.00

TECHNOLOGY OPTIONS & UPGRADES

For Technology options and upgrades, see the Technology section.

VIDEO AND CAMERA OPTIONS

	Video Options – Cameras For Use with 2012 and Newer Machines with C2100 Terminal	
BQC9K-C2A	Axial Field Installed 2 Camera Kit. Includes 2 Cameras, AgCam® 9" Quad Monitor Kit, Splitter and Extension Cables	Order From Parts
BQC9K-C4A	Axial Field Installed 4 Camera Kit. Includes 4 Cameras, AgCam® 9" Quad Monitor Kit, Splitter and Extension Cables	Order From Parts
BUSBK-C2	Axial C2100 Field Installed 2 Camera Kit Includes 2 Cameras, C2100 Terminal Adaptor Harness, Splitter and Extension Cables	Order From Parts
	Cameras - For Use with 2011 and Prior Machines with C2000 Terminal	
AC-C1	AgCam® Video Camera with Extension Cables (Requires AC-A2C to Connect to C2000 Terminal)	Order From Parts
AC-A2C	Connection Cable for C2000 Terminal (Required)	Order From Parts

Note: *Refer to Parts for additional AgCam® components*

OPERATOR'S MANUAL

700736125	French Operator's Manual and Decals	Order From Parts
700736126	Spanish Operator's Manual and Decals	Order From Parts

MASSEY FERGUSON®

MF9565 T4F
Combines

MF 9565

MASSEY FERGUSON®

STANDARD EQUIPMENT
F.O.B. Hesston, Kansas
Serial No. From AGCM95650HHC08101

FEEDING SYSTEM
- Grain Model - Fixed Speed Header Drive
- Corn/Soybean Model - Variable Speed Header Drive
- Smartrac™ Lateral Tilt System
- Single Point Multi-Coupler Hydraulic/Electric Connection
- Quick Attach Header Hook-Up with One Point Latching System
- 4 Strand Feed Conveyor with Offset Slats and Premium Chain
- Electric Header Drive Clutch
- Electro Hydraulic Feed Conveyor and Header Reverser
- Full Width, Dump Style Stone Trap
- Multi-Zone Feed Housing
- Single Speed Feed Drum

THRESHING AND SEPARATING SYSTEM
- Single Rotor Design
- Rotor: 31.5 in. (800 mm) Diameter; 140 in. (3,566 mm) Length
- Intake - Two sets of Intake Flighting
- Threshing - Four Overlapping Helical Rows of Segmented Threshing Elements (28 Elements)
- Separation - Two overlapping Helical Rows of Aggressive Threshing Elements (10 Elements) Two Overlapping Helical Rows of Interchangeable Separator Tines and Separator Paddles (14 Tines and 4 Paddles)
- Discharge - Two Discharge Paddles
- Mechanical Driven Rotor with 2 Speed Gearbox
- Rotor Speed Infinitely Variable:
- Low 264 - 709 rpm, High 460 to 1235 rpm
- Separator Reverser Operated from C2100 Terminal
- Four Concave Cover Plates Including Attaching Hardware
- Threshing and Separator System with Removable Concave and Separator Grate Deflectors
- 61.8 in. (1,570 mm) Wide Reciprocating Return Pan
- Upper Separator Cover Doors
- Concave Area: 2,115 in² (1.36 m²)
- Separating Area: 3420 in² (2.2 m²)
- **Grain Model** - Small Wire Grain Concave, Set of 10 Smooth Rasp Bars in Toolbox, 0.41 in.(10.4 mm) Wire Spacing and 6 Removable Concave Interrupter Plates
- **Corn/Soybean Model** – Round Bar Concave, 0.63 in (16 mm) Bar Spacing, 2 Large Wire Concaves Included in Toolbox on Corn Machines with Round Bars

CLEANING SYSTEM
- 61.8 in. (1,570 mm) Wide Cleaning System with Hydraulically Driven Variable Fan Speed and Fan Housing Shield
- Fan Speeds: 100 rpm – 1350 rpm
- Pneumatic Cleaning Area: 9,455 in2 (6.10 m2)
- 61 in. (1,560 mm) Wide Counterbalanced Cleaning Shoe
- **Grain Model**
  Chaffer - 1 1/8 in. (29 mm) Spacing, 7/8 in. (22 mm) vane
  Sieve - 1 1/8 in. (29 mm) Spacing, 7/16 in. (11 mm) vane
- **Corn/Soybean Model**
  Chaffer -1 5/8 in. (41 mm) Spacing, 1 1/4 in. (32 mm) vane
  Sieve - 1 5/8 in. (41 mm) Spacing, 7/8 in. (22 mm) vane
- Electric Chaffer and Sieve Adjustment
- Transmission Leaf Screens
- Rolling Leaf Screen Under Feeder House

GRAIN HANDLING SYSTEM
- 350 Bushel (12,334L) Hopper Style Center-Fill Grain Tank with Solid Flip-Up Extensions
- Proportional Electro-Hydraulic Swing Unloader Tube
- 21 ft Auger with Replaceable End Tube and Auger Section
- Clean Grain Elevator with Roller Chain
- Cross Auger Clean Out Doors
- Tailings Volume Sensor
- Grain Sample Inspection Door
- Chrome Augers Including Clean Grain, Tailings, Grain Tank Cross, and Unloading Auger

POWER SYSTEM
- AGCO POWER™ 98 AWF Seven Cylinder, Dual Stage Wastegate, Turbo Charged and Inter-Cooled Diesel Engine
- **Tier 4F Compliant** - SCR Emissions Technology, Cooled External EGR
- **MF9565**
  Rated: 460 HP (343 kW) @ 2,100 rpm
  Max Boost: 490 HP (365 kW) @ 1,950 rpm
- Belt driven Aspirated Pre-Cleaner
- 230 gal (870 L) Fuel Tank
- 24 gal (91 L) DEF Tank
- Battery Disconnect Switch

MASSEY FERGUSON®

MF 9565

STANDARD EQUIPMENT
F.O.B. Hesston, Kansas
Serial No. From AGCM95650HHC08101

HYDRAULIC SYSTEM
- Closed Center Load Sensing Hydraulic System with Variable Displacement Pump, 33.8 gpm (128 Lpm)
- Electric over Hydraulic Control of Header Raise and Lower Reel Raise and Lower, Unloader System
- Feeder and Header Reverser Including Reel Reversing (Variable Header Drive, if Equipped)
- Two 3.5 in. (89 mm) Diameter Header Lift Cylinder
- Header Suspension Accumulator
- Additional Hydraulic Outlet

DRIVE/PROPULSION SYSTEM
- Two-Speed Hydrostatic Drive with Four Speed Transmission, 0 to 22.7 mph (0-36.5 km/h)
- Individual, Hydraulic Actuated, Inboard Drum Type Brakes
- Adjustable Steering Axle with Dual Steering Cylinders
- S42 Final Drives

OPERATOR STATION
- Easy Access Cab Platform with Protective Railing and Power Swivel Ladder
- Automatic Climate Control
- Three High Capacity Air Filters
- Tilt and Telescope Hydrostatic Power Steering Column
- Operator Foot Rests
- Automatic Header Height Control (AHHC) with Return to Cut Feature
- Electric Concave Adjustment
- Hydraulic Reel or Pick-Up Drive with Electronic Speed Controller with Manual and Automatic Modes
- Ergonomic Arm Rest and Controls
- Enhanced Cab Interior
- Two Electronically Adjustable Rear View Mirrors, Two Adjustable Wide Angle Mirrors
- Air Ride Seat with Armrests, Adjustable
- High-Back Air Ride Seat with Armrests, Adjustable Backrest, Lumbar Support, Fore and Aft Seat, Height Adjustment and Weight Adjustment
- Large Cushioned Instructor Seat and Storage Compartment
- C2100 12.1" Color Touch Screen Terminal
- AM/FM, CD, MP3, Weatherband Radio with In-Cab Speakers (Satellite Ready)
- Hand Operated Parking Brake
- Right Hand Service Platform
- Operator's Manual

LIGHTS
- Interior Cab Lights
- Left Row Finder/Cab Egress Light
- Eight Adjustable Halogen Headlights
- Two LED Extremity and After-Cut Lights
- LED Unload Auger Light
- Two LED Grain Tank Lights
- Service Lights
- Four Flashing Amber Warning Lights
- Two Rotary Beacon Lights
- Two LED Brake and Tail Lights
- Right Row Finder Light
- LED Shoe Light

PRECISION AG SYSTEM
- Fieldstar® II Yield Monitoring System with 1 Hz WAAS DGPS Receiver
- FarmWorks™ View Software
- Grain Loss Monitor System
- AGCOMMAND™ Advanced (1 Year Subscription) Must be Activated within 12 months of Warranty Registration
- Auto-Steering Ready – Includes Steering Valve, Roof Mounting Plate and Integrated Steering Angle Sensor
- C2100 12.1" Touch Screen Terminal

MISCELLANEOUS
- E-Coat Primer with Powder Paint
- Safety Shielding and SMV Emblem
- Lubrication Decals
- Back-Up Alarm
- Truck Tie Down
- Greaseless Idlers
- Tool Storage Box
- New Paint Scheme and Decals

Class 7 & 8 Axial Recommended Configurations		
Option Category	**Corn Version** **Order Code and Description**	**Grain Version** **Order Code and Description**
Header Drive	(C702) Variable Speed Header Drive	(C701) Fixed Speed Header Drive
Concaves	(3C04) Round Bar Concaves	(3C03) Small Wire Concaves
Chaffer	(C103) Corn Adjustable Chaffer	(C102) Grain Adjustable Chaffer
Sieve	(9C02) Corn Sieve 1.62" Shallow Tooth (.875"/22 mm vane)	(9C01) Grain Sieve
Grain Bin	(HP03) 350 Bushel (12.3L) Powerfold Grain Bin	(HP03) 350 Bushel (12.3L) Powerfold Grain Bin
Unloading Tube	(C221) 24 ft (7.3M) Unloading Tube	(C221) 24 ft (7.3M) Unloading Tube
Powered Grain Saver	Powered Grain Saver for 24' Unloading Tube	Powered Grain Saver for 24' Unloading Tube
Straw Disposal System	(C403) MAV Straw Chopper	(C403) MAV Straw Chopper
Operator Seat	(AE13) Deluxe Seat	(AE13) Deluxe Seat
Radio	(A504) AM/FM CD, MP3, Bluetooth, Weatherband Radio	(A504) AM/FM CD, MP3, Bluetooth, Weatherband Radio
Video Option	(BA022) 4 Camera Ready with AgCam 9" Quad Monitor & Bracket	(BA022) 4 Camera Ready with AgCam 9" Quad Monitor & Bracket
Lighting Option	(VL01) NightBlaze Lighting Package	(VL01) NightBlaze Lighting Package
Front Ladder	(A401) Power Swivel Front Ladder	(A401) Power Swivel Front Ladder
Steer Tires (Adj Axle)	(P102-C157 or P104-C134) 600/70R30 R1W Firestone or 620/75R26 R1W Michelin	(P102-C146 or P104-C146) 750/65R26 (28L-R26) R1W (Firestone or Michelin)
Steer Tires (RWA)	(P102-C148 or P104-C141) 600/70R30 R1W Firestone or 620/75R26 R1W Michelin	(P102-C147 or P104-C147) 750/65R26 (28L-R26) R1W (Firestone or Michelin)
Drive Tires	(P102-C015) 520/85R42 (20.8R42) R1W (Firestone or Michelin)	(P102-C015) 520/85R42 (20.8R42) R1W (Firestone or Michelin)
Auto-Steering	(TX06) Auto-Guide™ 3000 Sub-Meter Auto-Steering	(TX06) Auto-Guide™ 3000 Sub-Meter Auto-Steering
Field Installed Kits	(700960060) Large Wire Concaves (Qty: 6)	(700960060) Large Wire Concaves (Qty: 6)
AGCO Parts	TBD Perforated Concave Overlap Panel	(700744451) Reverse Bar (1 pair)

Order Code	Catalog Number	Description	Approx. Weight (lb.)	List Price

ONE ORDER CODE FROM EACH BOX MUST BE SPECIFIED (except as noted)

COMBINE MODEL - REQUIRED — **BLOCK 01**

A103	71475415	MF9565G Grain Model	38693	465,275.00
A104	71475417	MF9565C Corn/Soybean Model	38693	465,455.00

HEADER DRIVE - REQUIRED — **BLOCK 140**

Corn/Soybean				
C702	71474023	Variable Speed Header Drive	420	In Base
C701	71472714	Fixed Speed Header Drive	336	(1,845.00)
Grain				
C701	71472714	Fixed Speed Header Drive		In Base
C702	71474023	Variable Speed Header Drive		1,863.00

FACTORY INSTALLED CONCAVES - REQUIRED — **BLOCK 180**

Corn/Soybean			
3C04	71473029	Round Bar Concaves (Option Includes 2 Large Wire Concaves Shipped Loose)	In Base
3C05	71473026	Large Wire Concaves	No Charge
Grain			
3C03	71473027	Small Wire Concaves	In Base
3C05	71473026	Large Wire Concaves	No Charge

CHAFFER - REQUIRED — **BLOCK 55**

C103	C0814033	Corn/Soybean Adjustable Chaffer	In Base
C102	C0814023	Grain Adjustable Chaffer	No Charge

SIEVES - REQUIRED — **BLOCK 175**

9C01	C0814024	Grain Sieve (Standard on Grain Version)	In Base
9C02	C0814037	Corn Sieve 1.62" Shallow Tooth (.875"/22 mm vane) (Standard on Corn Version)	In Base
9C03	C0814035	Corn Sieve 1.12"	No Charge

SIEVE AND CHAFFER ADJUSTMENT - OPTIONAL — **BLOCK 40**

E401	C0814011	Electric Sieve and Chaffer Adjustment	In Base
E400	C0814012	Manual Sieve and Chaffer Adjustment	(1,245.00)

GRAIN BIN - REQUIRED — **BLOCK 100**

HP02	71484442	350 Bushel (12.334L) Grain Bin	In Base
HP03	C0862430	350 Bushel (12.334L) Powerfold Grain Bin	5,549.00

SEGMENTED FEED DRUM — **BLOCK 215**

BR01	71476050	Single Speed Feed Drum For use in High MOG Crops such as Wheat or Canola	In Base
BR02	71476075	2-Speed Feed Drum For use in Low MOG, Delicate Grain Crops for Improved Grain Quality such as Edible Beans or Corn	5,299.00

UNLOADING TUBE - REQUIRED — **BLOCK 110**

C220	C0864303	21 Ft. Unloading Tube	In Base
C221	C0864304	24 Ft. Unloading Tube	551.00

UNLOADING SPOUT - OPTIONAL — **BLOCK 205**

UR01	71473099	Powered Grain Saver for 21' Unloading Tube	886.00
UR02	71473092	Powered Grain Saver for 24' Unloading Tube	886.00

Order Code	Catalog Number	Description	Approx. Weight (lb.)	List Price
STRAW DISPOSAL SYSTEM - REQUIRED				**BLOCK 240**
C403	71440351	MAV Straw Chopper	967	In Base
C402	71440355	Straw Spreader - Dual Mechanical	520	(3,040.00)
WINDROW ATTACHMENT - OPTIONAL				**BLOCK 255**
BM01	71455377	Windrow Kit		598.00
CHAFF DISPOSAL SYSTEM - OPTIONAL				**BLOCK 250**
BP01	71455378	Chaff Spreader - Dual Hydraulic (Recommended for Soybeans)	80	5,326.00
OPERATOR SEAT - REQUIRED				**BLOCK 25**
AE10	71449515	Standard Seat		In Base
AE13	71460433	Deluxe Seat, Gray Fabric with Leather Side Bolsters, Heating and Cooling		1,550.00
RADIO - REQUIRED				**BLOCK 50**
A504	71448062	AM/FM, CD, MP3, Bluetooth, Weatherband Radio (Satellite Ready)	15	In Base
A501	71393289	Less Radio		(366.00)
VIDEO OPTIONS - OPTIONAL				**BLOCK 160**
BA021	71451041	2 Camera Ready, USB converter for Display on C2100		465.00
BA022	71471742	4 Camera Ready with AgCam® 9" Quad Monitor and Mounting Bracket		810.00
Cameras and Extension Cables are not included - Order BC2K (2 Camera & Cable Kit) or BC4K (4 Camera & Cable Kit) from AGCO Parts				
Note: With factory installed option, cameras and cables will not be routed through the machine, this must be done after cameras are purchased through AGCO Parts				
LIGHTING - OPTIONAL				**BLOCK 170**
VL01	71465462	NightBlaze™ Lighting Package Includes Upgrade of 4 HID Cab Roof Lights, LED Row Finder Light (Right hand) Plus 2 additional LED Header Extremity Lights		3,413.00
FRONT LADDER - REQUIRED				**BLOCK 30**
A401	C0855114	Power Swivel Front Ladder		In Base
A403	C0855212	Powerfold Front Ladder		No Charge
STEERING AXLES - REQUIRED				**BLOCK 10**
A201	C0885420	Adjustable Axle		In Base
A202	C0885410	Rear Wheel Assist Axle	600	25,220.00

Order Code	Catalog Number	Description	Approx. Weight (lb.)	List Price
STEERING TIRES - REQUIRED				**BLOCK 65 & 70**
P997-C997	71398237	Less Steering Tires		(5,001.00)
For Adjustable Axle (A201 - C0885020)				
P102-C159	71445529	23.1R26 R1 Firestone®		In Base
P102-C157	71445527	600/70R30 162 A8 R1W Firestone®		1,122.00
P104-C134	71419366	620/75R26 (23.1-R26) 166 A8 R1W MICHELIN® Megaxbib™	1148	577.00
P102-C146	71440290	750/65R26 (28L-R26) 166 R1W Firestone®		890.00
P104-C146	71419360	750/65R26 (28L-R26) 166 A8 R1W MICHELIN® Megaxbib™	1420	1,179.00
For Rear Wheel Assist Axle (A202 - C0885010)				
P102-C160	71445530	23.1R26 R1 Firestone®		In Base
P102-C158	71445528	600/70R30 162 A8 R1W Firestone®		1,122.00
P104-C141	71419369	620/75R26 (23.1-R26) 166 A8 R1W MICHELIN® Megaxbib™	1142	577.00
P102-C147	71440291	750/65R26 (28L-R26) 166 R1W Firestone®		890.00
P104-C147	71419363	750/65R26 (28L-R26) 166 A8 R1W MICHELIN® Megaxbib™	1418	1,179.00

Order Code	Catalog Number	Description	Approx. Weight (lb.)	List Price
DRIVE TIRES - REQUIRED				**BLOCK 75 & 80**
P997-C997	71398236	Less Drive Tires		(11,614.00)
Single Drive Tires - Includes 4 in. (100 mm) Deck Extension				
P102-C071	71477463	900/60R32 176 A8 R1 Firestone®		In Base
P104-C058	71477459	900/60R32 176 A8 R1W MICHELIN® Megaxbib™	2464	1,345.00
Dual Drive Tires - Includes 25 in. (635 mm) Deck Extension				
P102-C008	71402113	20.8R42 ** R1 Firestone®		5,660.00
P102-C015	71440287	520/85R42 (20.8R42) 157 R1W Firestone®		6,289.00
P104-C015	71419378	520/85R42 (20.8R42) 157 A8 R1W MICHELIN® Agribib™	3804	8,450.00
P102-C077	71478764	620/70R42 (23.1R42) 160 R1W Firestone®		10,995.00
P104-C077	71426085	620/70R42 (23.1R42) 166 A8 R1W MICHELIN® Magaxbib™		14,683.00
P102-C004	71400261	20.8R38 R1 Firestone®		7,549.00
P104-C013	71419075	620/70R38 MICHELIN®		13,543.00
Note: 71478764 or 71426085 Duals Recommended for Grain Headers Larger than 35' and Corn Heads Larger than 8 Row				

Order Code	Catalog Number	Description	Approx. Weight (lb.)	List Price
SHIPPING WHEELS - REQUIRED				**BLOCK 85**
C997	71373046M	Less Shipping Wheels		In Base
P102-C999	71394027M	Shipping Wheels (Returnable for Full Credit)	920	4,371.00

Order Code	Catalog Number	Description	Approx. Weight (lb.)	List Price
AUTO-GUIDE™ 3000 AUTO-STEERING - OPTIONAL				**BLOCK 60**
TX06	71482384	Auto-Guide™ 3000 Sub-Meter Auto-Steering . . . . . (Includes: Roof Plate, Remote Antenna, and Pigtail Harness) Displays in Existing C2100 Terminal		6,095.00
NAME PLATE - OPTIONAL				**BLOCK 35**
Z101	71402198	Personalized Name Plate		274.00
YIELD MONITOR - OPTIONAL				**BLOCK 195**
GH01	71473097	Standard Yield Monitor Ready		In Base
GH02	71473098	Yield Monitor, AG Leader.		3,156.00

Note: AG Leader Ready option includes moisture sensor, yield sensor, moisture module, speed module, and cables installed from the factory. It DOES NOT include the AG Leader Display.
The display will need to be purchased from an AG Leader dealer.
Please visit this link to identify AG Leader Dealers http://www.agleader.com/dealers/

OPTIONS INSTALLED AT FACTORY - PRIOR TO SHIPMENT

71427860M	Ship Safe Preservative Coating . . . . . (Mandatory for Shipments November 15 - April 1)		604.00
C0850010M	Auto Lubrication System		6,542.00

Order Code	Catalog Number	Description	Approx. Weight (lb.)	List Price

FIELD INSTALLED ACCESSORIES (order as desired)

IF MARKED 'ORDER FROM PARTS' PLEASE ORDER FIELD INSTALLED ACCESSORIES THROUGH THE AGCO PARTS DIVISION. CONSULT THE PARTS ORDERING SYSTEM USING ONEAGCO SOLUTIONS-ONLINE TO DETERMINE CURRENT AVAILABILITY AND PRICING. FOR TECHNICAL ASSISTANCE CALL THE AGCO PARTS GROUP.

THRESHING AND SEPARATING SYSTEM

700959255M	Separator Paddle Kit (Qty 4)		190.00
700960059M	Small Wire Concaves Kit (Qty 6)		1,478.00
700960060M	Large Wire Concaves Kit (Qty 6)		1,200.00
700960061M	Round Bar Concaves Kit (Qty 6)		1,381.00
700960063M	Separator Finger Grate Kit (Qty 6)		1,651.00
700960064M	Separator Bar and Wire Grates Kit (Qty 6)		1,930.00
700960726M	Concave Interruptor Bars (Qty 6)		141.00

CLEANING SYSTEM

700962441M	Perforated Elevator Doors	125	404.00
700959183M	Grain Chaffer/Sieve Package	188	2,126.00
700959188M	Corn/Soybean Chaffer 1.12" Sieve Package		2,040.00
700959187M	Corn Chaffer/1.62" Deep Tooth (32 mm) Sieve Package	183	2,126.00
71378013	Air Foil Chaffer Divider Kit		194.00
71486087M	Electric Sieve and Chaffer Adjustment		1,256.00
700950616M	Airfoil Chaffer		1,531.00
700962442M	Edible Bean Cleaning Kit		604.00
700959556M	Return Pan Extension.		177.00
700962866M	Risers, Hill Side - Chaffer	24	315.00

GRAIN HANDLING SYSTEM

700959195M	Unloading Tube Extension (For Conversion for 21-24 Ft. Unloading Tube Only)		1,183.00
700963068M	350 Bushel Powerfold Grain Bin Extension		8,475.00

CROP RESIDUE DISPOSAL SYSTEM

700959539M	MAV Straw Chopper	835	7,907.00
700959538M	Straw Spreader	450	4,842.00
700959541M	Chaff Spreader (Recommended for Soybeans).	265	6,889.00
700959540M	Windrow Kit		663.00

STEERING AXLE

71440192M	Rear Wheel Assist Axle		33,384.00

FEEDING SYSTEM

700962519M	2-Speed Segmented Feed Drum (Compatible with Model Year 2013 and Newer Combines)		5,999.00

MF 9565 FIELD INSTALLED

MASSEY FERGUSON®

Order Code	Catalog Number	Description	Approx. Weight (lb.)	List Price

IF MARKED 'ORDER FROM PARTS' PLEASE ORDER FIELD INSTALLED ACCESSORIES THROUGH THE AGCO PARTS DIVISION. CONSULT THE PARTS ORDERING SYSTEM USING ONEAGCO SOLUTIONS-ONLINE TO DETERMINE CURRENT AVAILABILITY AND PRICING. FOR TECHNICAL ASSISTANCE CALL THE AGCO PARTS GROUP.

OPERATORS STATION

	Ladder Deck Extension		
71402014	4 in. (100 mm) Deck Extension	30	420.00
700957915M	12 in. (305 mm) Deck Extension	75	834.00
700957914M	25 in. (635 mm) Deck Extension	154	1,183.00
	Accessories		
71465455M	High Definition Lighting (Includes 2 HID Cab Roof Lights and Ballast)		1,517.00
71471027M	NightBlaze™ Lighting Package (Includes 4 HID Cab Roof Lights, LED Row Finder Light (Right Hand), 2 LED Header Extremity Lights and Brackets Fits 2009 and Newer 9005 and 9500 Series)		3,927.00
700959069M	AM/FM, CD, MP3, Weatherband Radio. (Satellite Ready)		798.00

TECHNOLOGY OPTIONS & UPGRADES

For Technology options and upgrades, see the Technology section.

VIDEO AND CAMERA OPTIONS

	Video Options – Cameras For Use with 2012 and Newer Machines with C2100 Terminal	
BQC9K-C2A	Axial Field Installed 2 Camera Kit. Includes 2 Cameras, AgCam® 9" Quad Monitor Kit, Splitter and Extension Cables	Order From Parts
BQC9K-C4A	Axial Field Installed 4 Camera Kit. Includes 4 Cameras, AgCam® 9" Quad Monitor Kit, Splitter and Extension Cables	Order From Parts
BUSBK-C2	Axial C2100 Field Installed 2 Camera Kit Includes 2 Cameras, C2100 Terminal Adaptor Harness, Splitter and Extension Cables	Order From Parts
	Cameras - For Use with 2011 and Prior Machines with C2000 Terminal	
AC-C1	AgCam® Video Camera with Extension Cables (Requires AC-A2C to Connect to C2000 Terminal)	Order From Parts
AC-A2C	Connection Cable for C2000 Terminal (Required)	Order From Parts

Note: *Refer to Parts for additional AgCam® components*

OPERATOR'S MANUAL

700736125	French Operator's Manual and Decals	Order From Parts
700737126	Spanish Operator's Manual and Decals	Order From Parts

MASSEY FERGUSON®

HEADERS

MF 3300 CORN HEAD (NON-CHOPPING)

MASSEY FERGUSON®

STANDARD EQUIPMENT
F.O.B. Hesston, Kansas
Serial No. From AGCMXXXX0GHCH1101

- Individual Self-Contained Row Unit with Enclosed Gear Box Drive
- Low Profile Design, Adjustable Entry Angle
- Hydraulic Fore/Aft Pitch, 12 Degrees of in Cab Adjustment
- Hydraulic Accumulator Tilt Protection
- Adjustable Gathering Chain Guides
- Electric Adjustable Stripper Plates with Position Indicator
- Single Point Multi-Coupler Hydraulic/Electrical Connection
- Aggressive Point to Point Snapping Rolls with Replaceable Blades
- 20 in. (508 mm) Diameter and 30 in. (762 mm) Pitch Cross Auger
- Over Reaching Auger Geometry
- Robust Heavy Duty Frame
- Quick Hook-Up
- Cove Shaped Low Density Polyethylene Points, Snouts and Gatherers
- Optimized Gathering Chain to Stalk Roll Speed
- Ear Saving Gathering Chain Design
- Extremity Lights
- Reichhardt Row Guidance Ready
- Headsight Auto Header Height Control Ready
- Greaseless Idlers
- Conveyor Auger Hood
- Smooth Beveled Deck Plates

Order Code	Catalog Number	Description	Approx. Weight (lb.)	List Price

ONE ORDER CODE FROM EACH BOX MUST BE SPECIFIED (except as noted)

BASE MACHINE - REQUIRED

Non-Chopping				
30INCH	71482007	MF3308 Transverse . . . . . (8 Row Non-Chopping Corn Head)	5625	66,502.00
30INCH	71482008	MF3312 Transverse . . . . . (12 Row Non-Chopping Corn Head)	5625	102,444.00

FIELD INSTALLED MISCELLANEOUS

If marked 'order from parts' Please order field installed accessories through the AGCO Parts Division. Consult the parts ordering system using oneAGCO Solutions-Online to determine current availability and pricing. For technical assistance call THE AGCO PARTS group.

700962793M	Conversion Kit (Axial to Transverse) . . . . . (Includes Feed Opening Filler Panels and Transverse Length Drive Shaft)	911.00
700962792M	Transverse to Axial Conversion.	911.00
700962393M	Ground Sensing- Headsight (Qty 4) . . . . . (Only Compatible with 12 Row Heads)	1,972.00
700962392M	Ground Sensing - Headsight (Qty 2) . . . . . Note: 8 Row Heads can Accommodate 1 of Kit# 700962392M 12 Row Heads can Accommodate up to 2 of Kit# 700962392M	986.00
700962366M	Snout Skids (8 Row) . . . . . (Recommended in ALL Conditions on all Headers)	283.00
700962367M	Snout Skids (12 Row). . . . . (Recommended in ALL Conditions on all Headers)	424.00
700962791M	Walk Platform.	352.00
700960732M	Reichhardt Row Guidance Completing Package . . . (Contact Reichhardt for Installation Instructions on Combines other than the Gleaner S9)	1,207.00

PRESERVATIVE COATING

71428520M	Ship Safe Preservative Coating. . . . . (Mandatory for Shipments November 15 - March 31)	604.00

MF 3300 CORN HEAD (CHOPPING)

STANDARD EQUIPMENT
F.O.B. Hesston, Kansas
Serial No. From AGCMXXXX0GHCH1101

- Individual Self-Contained Row Unit with Enclosed Gear Box Drive
- Low Profile Design, Adjustable Entry Angle
- Hydraulic Fore/Aft Pitch, 12 Degrees of in Cab Adjustment
- Hydraulic Accumulator Tilt Protection
- Adjustable Gathering Chain Guides
- Electric Adjustable Stripper Plates with Position Indicator
- Single Point Multi-Coupler Hydraulic/Electrical Connection
- Aggressive Point to Point Snapping Rolls with Replaceable Blades
- 20 in. (508 mm) Diameter and 30 in. (762 mm) Pitch Cross Auger
- Over Reaching Auger Geometry
- Robust Heavy Duty Frame
- Quick Hook-Up
- Conveyor Auger Hood
- Cove Shaped Low Density Polyethylene Points, Snouts and Gatherers
- Optimized Gathering Chain to Stalk Roll Speed
- Ear Saving Gathering Chain Design
- Extremity Lights
- Reichhardt Row Guidance Ready
- Headsight Auto Header Height Control Ready
- Greaseless Idlers
- Smooth Beveled Deck Plates

- **Chopping Features**
- Lawn Mower Style Blades
- 2 Blades per Row Unit
- Reversible Chopper Blades
- Blade Position Optimized to Eliminate Head Loss When Chopping
- Individual Row Unit Choppers can be Disengaged
- Low Drive Power Requirements

Order Code	Catalog Number	Description	Approx. Weight (lb.)	List Price

ONE ORDER CODE FROM EACH BOX MUST BE SPECIFIED (except as noted)

BASE MACHINE - REQUIRED

Chopping			
30INCH	71482005	MF3308C Transverse. . . . . (8 Row Chopping Corn Head)	90,535.00
30INCH	71482006	MF3312C Transverse. . . . . (12 Row Chopping Corn Head)	137,062.00

FIELD INSTALLED MISCELLANEOUS

If marked 'order from parts' Please order field installed accessories through the AGCO Parts Division. Consult the parts ordering system using oneAGCO Solutions-Online to determine current availability and pricing. For technical assistance call THE AGCO PARTS group.

700962793M	Conversion Kit (Axial to Transverse) . . . . . (Includes Feed Opening Filler Panels and Transverse Length Drive Shaft)	911.00
700962792M	Transverse to Axial Conversion.	911.00
700960731M	Stalk Stomper Kit (4 Rows) . . . . . Note: Suggested quantity of 2 Kits for 8 Row Heads and quantity of 3 Kits for 12 Row Heads	960.00
700962393M	Ground Sensing- Headsight (Qty 4) . . . . . (Only Compatible with 12 Row Heads)	1,972.00
700962392M	Ground Sensing - Headsight (Qty 2) . . . . . Note: 8 Row Heads can Accommodate 1 of Kit# 700962392M 12 Row Heads can Accommodate up to 2 of Kit# 700962392M	986.00
700962366M	Snout Skids (8 Row) . . . . . (Recommended in ALL Conditions on all Headers)	283.00
700962367M	Snout Skids (12 Row). . . . . (Recommended in ALL Conditions on all Headers)	424.00
700962791M	Walk Platform.	352.00
700960732M	Reichhardt Row Guidance Completing Package . . . (Contact Reichhardt for Installation Instructions on Combines other than the Gleaner S9)	1,207.00

PRESERVATIVE COATING

71428520M	Ship Safe Preservative Coating. . . . . (Mandatory for Shipments November 15 - March 31)	604.00

MF 4300 PICK-UP HEAD

MASSEY FERGUSON®

STANDARD EQUIPMENT
F.O.B. REGINA, CANADA
Serial No. From AGCM4300G

Pick-up Head

- 24 in. (610 mm) Auger for High Capacity Feeding
- Heavy Duty, Fully Shielded Driveshaft with Built-In Clutch
- Single Point Multi-Coupler Hydraulic/Electrical Connection
- Auto Header Height Control

Pick-Up Attachment

- Swathmaster - Conventional Belt Pickup
- Large Front and Rear 26 in. (660 mm) Drapers Assures Smooth Feeding
- 18 x 8.50 Flotation Tires
- Front and Rear Drapers Driven Independently By 2 Hydraulic Drive Motors
- Tracking Groove Design On Drapers
- 5" Front and Rear Drum For Draper Rollers
- Draper Belt Connector Bars
- 4 Draper Belts

Order Code	Catalog Number	Description	Approx. Weight (lb)	List Price

ONE ORDER CODE FROM EACH BOX MUST BE SPECIFIED (except as noted)

MF 4300 PICK-UP HEADER - REQUIRED **BLOCK 01**

MF4300-15	71482752	15 ft. Pick-Up Head with 16 ft. Swathmaster	32,162.00

FIELD INSTALLED ACCESSORIES (order as desired)

71482759M	Transverse Combine Completing Package (Field Conversion from Axial)	4,240.00
71482760M	Hold Down Bars for Extreme Light Crops.	1,177.00

MASSEY FERGUSON®

MF 8200 FLEX HEAD

STANDARD EQUIPMENT
F.O.B. Hesston, Kansas
Serial No. From AGCM82XX0FHW08101

- ¾ in. (19 mm) Diameter Hi-Strength Conveyor Fingers with Urethane Guides
- SCH Epicyclical Drive
- Electro-Hydraulic Reel Lift
- Power (Electric) Fore and Aft Reel Adjust
- Angle Retarders
- Extremity Lights
- Plastic Skid Plates
- Stainless Steel Feather Sheets
- Hydrostatic Reel Drive, 0-58 rpm
- Right-Hand Reel Drive
- Bolt-On Sickle Sections
- Adjustable SCH Sickle Head
- SCH Sickle and Guards with Roller Guides
- Header Height Control
- Balanced 30 in. (762 mm) Diameter Full Finger Auger with 27 in. (686 mm) Pitch Flighting
- Single Sickle @ 470 rpm
- Independent Floating Dividers
- Flexible Drive Shaft
- Reel Torque Limiter
- Quick Attach Header Hook-Up
- Single Multi-Coupler for Electrical and Hydraulic Connections
- Welded Frame Construction
- Chain Drive Conveyor with 6 Bolt Hub and Friction Disc Slip Clutch
- Reel Lift Ram Stops
- Fine Reel Height Adjustment

ONE ORDER CODE FROM EACH GROUP MUST BE SPECIFIED (except as noted)

MF 8200 FLEX HEADER - REQUIRED — BLOCK 01

Order Code	Catalog Number	Description	Approx. Weight (lb.)	List Price
MF8200-20	71466568YH	20 ft. (6.1 m)		32,043.00
MF8200-25	71466569YH	25 ft. (7.6 m)		33,811.00
MF8200-30	71466570YH	30 ft. (9.1 m)		38,241.00
MF8200-35	71466571YH	35 ft. (10.7 m)		44,778.00

SICKLE - REQUIRED — BLOCK 05

Schumacher (SCH) Sickle and Guard (With Roller Guides)				
H506	71428419	20 ft. (6.1 m)		In Base
H506	71428420	25 ft. (7.6 m)		In Base
H506	71428421	30 ft. (9.1 m)		In Base
H506	71428422	35 ft. (10.7 m)		In Base

REELS - REQUIRED — BLOCK 15

Less Reel				
H704	71468401	Less Reel		No Charge
Pick-Up Reel (HCC Level 2)				
H705	71408065	20 ft. (6.0 m)		4,992.00
H705	71408064	25 ft. (7.6 m)		6,240.00
H705	71408063	30 ft. (9.1 m)		7,490.00
H705	71408020	35 ft. (10.6 m)		8,738.00

MF 8200 FIELD INSTALLED

MASSEY FERGUSON®

Order Code	Catalog Number	Description	Approx. Weight (lb)	List Price
FIELD INSTALLED ACCESSORIES (order as desired)				
RAISED FEATHER SHEETS				
	700957979M	20 ft. (6.1 m)		818.00
	700957980M	25 ft. (7.6 m)		964.00
	700957981M	30 ft. (9.1 m)		1,109.00
	700957585M	35 ft. (10.7 m)		1,254.00
MISCELLANEOUS				
	71408024	Long Wing Dividers	62	667.00
	700958715M	25' - 35' Orbit Reel Kit.		3,839.00
	700958714M	20' Orbit Reel Kit		2,003.00
	71430156	External Skid Shoe Kit		130.00
	71428520M	Ship Safe Preservative Coating. (Mandatory for Shipments November 15 - April 1)		604.00

MASSEY FERGUSON®

MF9255 DYNAFLEX® DRAPER HEAD

STANDARD EQUIPMENT
F.O.B. Hesston, Kansas
Serial No. From AGCM92550GHD01101

- Header Frame Structure with Upper and Lower Tubes
- 12 Degree Header Tilt Hydraulic Adjust on Interface
- Feeder House Platform
- Flexible Cutterbar – Independent Dampened Tilt Arms Every 30”, Sectioned Float Pads
- 8 in. Hydraulic Cutterbar Flotation with Accumulator and Adjustment from Cab
- Heavy Duty Fly Wheel Sickle Drive
- Narrow Profile End Shields
- Dampened Sickle Drive PTO Shaft
- Synchronous Belt Drive for Auger and Center Draper
- V-guide on Center and Side Drapers for Consistent Tracking
- Mechanical Side and Center Draper Drives
- Rubberized Draper Canvas 41" Wide Moving at 502 ft/min (2.5 m/sec)
- Spring Loaded Side Draper Tension with Indicator and Extended Adjustment Range
- Updated End Skid Geometry Over 9250
- Single Height Skid Design
- Adjustable Height Parking Stands
- Central Canvas 48.5" Wide Moving at 572 ft/min (2.7 m/sec)
- 21” Auger Diameter, 46.3” Wide Rotating at 200 rpm
- Auger Flighting Filler (in box)
- Stainless Steel Auger Pan
- Forward Auger Position
- Clutch Protection for Center Draper and Auger
- Stainless Steel Front Belt Guards
- Hydraulic Variable Speed Reel Drive with Pressure Relief Valve
- Electric Reel Fore/Aft Adjustable from Cab
- Single Point Hook Up
- Plastic Dividers and End Shields
- Quick Attach Shields
- Auto Header Control System
- Long Divider Rod
- Adjustable Tine Pitch

***Note: The combine has to be equipped with lateral tilt and additional hydraulic outlet.**

Order Code	Catalog Number	Description	Approx. Weight (lb.)	List Price
ONE ORDER CODE FROM EACH BOX MUST BE SPECIFIED (except as noted)				
BASE MACHINE - REQUIRED				**BLOCK 01**
MF9255-25	71482013	25 ft (7.6m)		71,963.00
MF9255-30	71482014	30 ft. (9.1m)		85,417.00
MF9255-35	71482015	35 ft. (10.6m)		89,710.00
MF9255-40	71482016	40 ft. (12.1m)		98,097.00
REEL - REQUIRED				**BLOCK 15**
H706	71481525	Heavy Duty Single Piece Reel 25 ft.		2,805.00
	71481524	Heavy Duty Single Piece Reel 30 ft.		3,010.00
	71481523	Heavy Duty Single Piece Reel 35 ft.		3,517.00
	71481522	Heavy Duty Single Piece Reel 40 ft.		4,070.00
H704	71483577	Remove Reel		No Charge

MF9255 DYNAFLEX® DRAPER HEAD

MASSEY FERGUSON®

Order Code	Catalog Number	Description	List Price
SICKLE - REQUIRED (High Capacity Recommended for Best Cutting Performance)			**BLOCK 05**
H508	71424607	High Capacity Row Crop 25 ft.	In Base
	71424606	High Capacity Row Crop 30 ft.	In Base
	71424605	High Capacity Row Crop 35 ft.	In Base
	71423628	High Capacity Row Crop 40 ft.	In Base
H503	71420433	High Capacity Small Grain 25 ft.	No Charge
	71420432	High Capacity Small Grain 30 ft.	No Charge
	71420431	High Capacity Small Grain 35 ft.	No Charge
	71420442	High Capacity Small Grain 40 ft.	No Charge
H509	71420437	SCH Row Crop 25 ft.	564.00
	71420436	SCH Row Crop 30 ft.	676.00
	71420435	SCH Row Crop 35 ft.	789.00
	71420443	SCH Row Crop 40 ft.	901.00
AHHC DRAG RODS - OPTIONAL			**BLOCK 35**
C503	71424616	AHHC Drag Rods	498.00
SPARE SICKLE - OPTIONAL			**BLOCK 45**
H601	71424594	High Capacity Row Crop 25 ft.	819.00
	71424593	High Capacity Row Crop 30 ft.	978.00
	71424592	High Capacity Row Crop 35 ft.	1,134.00
	71424591	High Capacity Row Crop 40 ft.	1,288.00
H602	71424589	High Capacity Small Grain 25 ft.	819.00
	71424588	High Capacity Small Grain 30 ft.	978.00
	71424587	High Capacity Small Grain 35 ft.	1,134.00
	71424586	High Capacity Small Grain 40 ft.	1,288.00
H603	71424604	SCH Row Crop 25 ft	819.00
	71424603	SCH Row Crop 30 ft	978.00
	71424602	SCH Row Crop 35 ft	1,134.00
	71424601	SCH Row Crop 40 ft.	1,288.00
H604	71424599	SCH Small Grain 25 ft.	819.00
	71424598	SCH Small Grain 30 ft.	978.00
	71424597	SCH Small Grain 35 ft.	1,134.00
	71424596	SCH Small Grain 40 ft.	1,288.00

FIELD INSTALLED ACCESSORIES (order as desired)

700961058M	AHHC Drag Rods – For use as Rigid Header.	498.00
700958053M	Reel Speed Increase Kit	214.00
71427873M	Ship Safe Preservative Coating. . . . . (Mandatory for Shipments November 15 - April 1)	604.00
700956337M	Axial to Transverse Conversion. . . . . (Axial Header Adapter to Install on Transverse Combine) (Includes Feed Opening Filler Panels and Transverse Drive Shafts)	911.00
700957015M	Transverse to Axial Conversion. . . . . (Transverse Header Adapter to Install on Axial Combine) (Includes Axial Length Drive Shafts)	911.00
700956893M	Slow Speed Transport Kit (25' to 40' headers)	6,320.00
700962401M	Long Dividers	201.00
700962402M	Reel Arm and Divider Rods.	361.00
700962404M	Stainless Steel End Skids.	152.00

HESSTON by MASSEY FERGUSON

HAY EQUIPMENT

TABLE OF CONTENTS

PAGE

Warranty 4

Self Propelled Windrowers 5

WR9800 Series Self Propelled Windrower Product Information . . . 6
WR9870 Self Propelled Windrower . . . 7
WR9860 Self Propelled Windrower . . . 10
WR9840 Self Propelled Windrower . . . 13
WR9740 Self Propelled Windrower **SUBJECT TO AVAILABILITY** . . . 16

Headers 19

9196 Rotary Header for WR9770, WR9760, WR9870, WR9860 . . . 20
9195 Rotary Header for WR9770, WR9760, WR9870, WR9860 . . . 21
9186 Rotary Header for WR9770, WR9760, WR9870, WR9860 . . . 22
9183 Rotary Header for WR9770, WR9760, WR9870, WR9860 . . . 23
9146 Dual Sickle Auger Headers . . . 24
for WR9770, WR9760, WR9740, WR9735, WR9725, WR9870, WR9860, WR9840
9126 Dual Sickle Auger Headers . . . 25
for WR9770, WR9760, WR9740, WR9735, WR9725, WR9870, WR9860, WR9840
5300 Center Delivery & Shiftable Draper Headers . . . 26
for WR9770, WR9760, WR9740, WR9735, WR9725, WR9870, WR9860, WR9840

Mowers 29

Disc Mower and Conditioner Product Information . . . 30
1386 Disc Mower Conditioner . . . 31
1383 Disc Mower Conditioner . . . 32
1366 Disc Mower Conditioner . . . 33
1363 Disc Mower Conditioner . . . 34
1359 Disc Mower Conditioner . . . 35

Front and Rear Mower Conditioner Product Information . . . 36
DM9314 Disc Mower Conditioner . . . 37
DM306 Disc Mower Conditioner . . . 38

Farmer and Professional Disc Mower Product Information . . . 39
DM357 / DM306 / DM255 Professional Series Disc Mower . . . 40
DM287 / DM246 / DM205 / DM164 Farmer Series Disc Mower . . . 41

Rakes and Tedders 42

V Wheel Rakes - 1512 / 1512S / 1510 / 1510S / 1508 . . . 43
Y Wheel Rake - SV415 . . . 44
Hi-Capacity Bi-Fold Wheel Rakes - 3986 / 3983 . . . 45
5130 Heavy Duty Wheel Rake . . . 46
RK Series Rotary Rakes - RK702 / RK662 / RK451T / RK451 / RK361 . . . 47
RK Series Rotary Rakes - RK1254 PRO / RK802 PRO / RK772 . . . 48
TD Series Hi- Capacity Tedders - TD1310 / TD1310 / TD1008 / TD1008 . . . 49
TD Series Hi- Capacity Tedders - TD776 / TD776T / TD676 / TD524 / TD524 / TD252 . . . 50

HESSTON by MASSEY FERGUSON

TABLE OF CONTENTS

PAGE

Round Balers **51**
- Round Baler Product Information . . . 52
- 2956A Round Baler . . . 53
- 2956 Round Baler . . . 55
- 2946A Round Baler . . . 57
- 2946 Round Baler . . . 59
- 1745 Round Baler . . . 61
- 1734 Round Baler . . . 62
- AGCO Hay Preservative and Application Equipment. . . . 83

Small / Medium Rectangular Balers **63**
- Small / Medium Rectangular Baler Product Information . . . 64
- 1844S / 1844N Medium Rectangular Baler . . . 65
- 1842 Medium Rectangular Baler . . . 66
- 1840 Small Rectangular Baler . . . 67
- 1838 Small Rectangular Baler . . . 68
- 1836 Small Rectangular Baler . . . 69
- AGCO Hay Preservative and Application Equipment. . . . 83

Large Rectangular Balers **71**
- Large Rectangular Baler Product Information . . . 72
- 2290 Large Rectangular Baler . . . 73
- 2270 Large Rectangular Baler . . . 75
- 2270XD Large Rectangular Baler . . . 77
- 2250 Large Rectangular Baler . . . 79
- AC25 Bale Accumulator for 2290, 2270 and 2270XD . . . 81
- AC20 Bale Accumulator for 2250 . . . 82
- AGCO Hay Preservative and Application Equipment. . . . 83

Forage **85**
- 7515 Forage Blower . . . 86

Waste Handling **87**

Heavy Duty Manure Spreaders
- SP3748 / SP3735 Manure Spreader . . . 88
- SP3728 / SP3724 / SP3719 Manure Spreader . . . 89
- SP3717 / SP3714 / SP3710 Manure Spreader . . . 90

Hydra-Push Spreaders
- HY3744 / HY3730 Manure Spreader . . . 91

Top Shot Spreaders
- VB3755 / VB3744 / VB3734 / VB3726 Manure Spreader . . . 92

Non-Current **94**
- DM1398 Disc Mower Conditioner. . . . 96
- DM1340 Disc Mower Conditioner. . . . 97
- DM1358 / DM1340 / DM1362 Professional Series Disc Mower . . . 99
- DM1309 / DM1308 / DM1306 / DM1305 Farmer Series Disc Mower . . . 100
- RK Series Rotary Rakes - RK3835 / RK3845 / RK3814 / RK3814H / RK3802 . . . 101
- RK Series Rotary Rakes - RK3891 / RK3879 PRO / RK3855 . . . 102
- TD Series Hi- Capacity Tedders - TD1665 / TD1663 / TD1661 / TD1655 / TD1658. . . . 103
- TD Series Hi- Capacity Tedders - TD1638 / TD1648 / TD1636 / TD1635 / TD1635H / TD1620 . . . 104
- Non-Current Kits . . . 105

Referral Attachments **106**

HESSTON by MASSEY FERGUSON

NEW FARM EQUIPMENT WARRANTY

Product	Warranty Terms
Hay and Forage	**Basic Warranty** : 12 Months, Hours Unlimited
Round Balers	**Basic Warranty :** 24 Months, Hours Unlimited
SP Windrowers	**Engine Warranty:**
	AGCO Power™ - 2 years or 2000 Hours
SP Windrower Headers	**Auger, Disc and Draper Header Warranty:** 1 year, Hours Unlimited
Coverage: Parts and labor at servicing dealer locations	

Product	Warranty Terms
All Hesston Built Disc Headers and Disc Mower Conditioners	**RazorGuard Warranty :** 3 years, Hours Unlimited, Parts Only Items covered: Module Casting, Idler Bearings & Idler Gears, Gear Spindles & Assembly, Spindle Bearings, Seals

HESSTON
by MASSEY FERGUSON

SELF-PROPELLED WINDROWERS

9800 SERIES SELF-PROPELLED WINDROWER

FOB Hesston, KS

PRODUCT INFORMATION

TRACTOR	WR9870	WR9860	WR9840
Rated Horsepower Maximum Horsepower	225 (168 KW) 240 (179 KW)	197 (145 KW) 208 (155 KW)	137 (102 KW) 148 (110 KW)
Header Option	All	All	Draper or Sickle
Drive Tires (STD) Tread	23.1R26 Turf Radial 23.1 x 26 Turf 620/75R26 Bar	23.1R26 Turf Radial 23.1 x 26 Turf 620/75R26 Bar	18.4 x 26 Turf 18.4R26 Bar 23.1 x 26 Turf 23.1R26 Turf 620/75R26 Bar
Fuel Capacity	130 Gal (492 L)	130 Gal (492 L)	130 Gal (492 L)
Cab	Deluxe	Deluxe	Deluxe
HEADER			
Drive	Hydraulic	Hydraulic	Hydraulic
Flotation	Hydraulic	Hydraulic	Hydraulic

HEADER APPLICATIONS

Hay Headers:			
9183 Disc (13 ft)	X	X	
9186 Disc (13 ft)	X	X	
9195 Disc (16 ft)	X	X	
9196 Disc (16 ft)	X	X	
9146 Sickle (14 ft)	X	X	X
9146 Sickle (16 ft)	X	X	X
9126 Sickle (14 ft)	X	X	X
9126 Sickle (16 ft)	X	X	X
9126 Sickle (18 ft)	X	X	X
Draper Headers:			
5300 Center Delivery (20', 25', 30', 35', 40')	X	X	X
5300 Shiftable (25', 30', 35', 40')	X	X	X

NOTE: This is a general sales guide; for further product details and official specifications refer to product information guides and product literature.

HESSTON by MASSEY FERGUSON

WR9870 SELF-PROPELLED WINDROWER

FOB Hesston, KS

STANDARD EQUIPMENT

AGCO Power™ Turbo-Charged and Intercooled Diesel 6.6 CTA
SCR Emission Control System
6.6 Liter 6 Cylinder Engine
Rated Horsepower: 225 at 2100 RPM
Maximum Horsepower: 240 at 1900 RPM
Variable Speed Ground Drive Motors
Electronically Actuated Parking Lock
High Capacity Electronically Controlled Header Drive Pump with Reverser
Automatic Header Safety Lock
Hydraulic Header Tilt
Precision Auto-Guide™ Ready
Electro-Hydraulic Steering
Adjustable Steering Sensitivity
Adjustable Rear Axle Casters
GlideRider™ Suspended Rear Axle
22 mph High Speed Ground Drive
Tinted Rear Window
V-Cool™ Hydraulic Auto-Cleaning and Cooling Package
Integrated C1000 Color Monitor
Two Large External Rear View Mirrors
Large Deluxe Cab with Air Conditioner and Heater
Tilt and Telescoping Adjustable Steering Column
High Back Air Suspension Seat
Instructor Seat
Ground Level Maintenance
12-Volt Electrical System
130 Gallon Fuel Tank
Integrated Horn
AM/FM, CD, MP3 with Weatherband Radio (Satellite Ready) (Antenna Not Included)

Order Code	Catalog Number	Description	Approx. Weight(lb)	List Price
		ONE ITEM FROM EACH GROUP MUST BE SPECIFIED UNLESS NOTED OTHERWISE		
BASE MACHINE				**GROUP 01**
MFWR9870	700963373	WR9870 Self Propelled Windrower		138,478.00
UPGRADE PACKAGE				**GROUP 02**
	MKT0310	Deluxe Hay Package Includes: Deluxe Wide Air Suspended Cab Automatic Climate Control Semi-Active Seat, Gray Fabric with Stitching; Leather Side Bolsters, Heating and Cooling		4,349.00
	MKT0370	Premium Grain Package Includes: Deluxe Wide Air Suspended Cab Automatic Climate Control Semi-Active Seat, Gray Fabric with Stitching; Leather Side Bolsters, Heating and Cooling Windshield Wiper Reel Fore/Aft Rear End Counterbalance Weight Quick Connect Coupler- Single Point (Required for 5300 Header) Adapter Kit Draper/Auger Header		8,094.00
STEERING				**GROUP 03**
50-D023	700962827	High Speed Transport, Standard Steering - 22 MPH		**In Base**
50-D024	700962816	RearSteer High Speed Transport - 24.5 MPH		5,424.00
REAR HITCH				**GROUP 04**
80-S702	700961638	Pivoting Hitch(Available w/ Rear Wheel Steer option only).		1,124.00
80-S701	700959624	Rear Hitch for Rollers		132.00
CAB OPTIONS				**GROUP 05**
20-UC03	700963368	Deluxe Rigid Mount Cab		**In Base**
20-UC02	700963367	Deluxe Wide Air Suspended Cab		1,642.00
CAB CLIMATE CONTROLS				**GROUP 06**
30-AQ02	700957385	Manual Climate Control		**In Base**
30-AQ04	700956913	Automatic Climate Control		828.00
QUICK COUPLERS				**GROUP 07**
60-GC01	700962037	Less Quick Couplers		**In Base**
60-GC03	700962039	Quick Connect Coupler- Single Point (Required for 5300 Header - Adaptable for Rotary Headers)		670.00

Dealers are Required to have EDT Tool Before ordering WR Windrowers.

WR9870 SELF-PROPELLED WINDROWER

Order Code	Catalog Number	Description	Approx. Weight(lb)	List Price
TIRE OPTIONS				**GROUP 10**
75-S106	700956981	23.1 x 26 Bias Turf Tires with 14L x 16.1 Rear		5,669.00
75-S116	700958655	23.1 x 26 Bias Turf Tires with 16.5L x 16.1 Rear		6,703.00
75-S117	700958066	23.1R26 Turf Radial Tires with 16.5L x 16.1 Rear		8,533.00
75-S119	700960032	620/75R26 Radial Bar (Alliance) with 16.5L x 16.1 Rear		8,554.00
75-S118	700960033	620/75R26 Radial Bar (Michelin) with 16.5L x 16.1 Rear		9,410.00
SEAT				**GROUP 11**
35-AE10	700960838	High Back Air Suspension Seat, Gray Fabric with Stitching		**In Base**
35-AE14	700960840	Semi-Active Seat, Gray Fabric with Stitching, Leather Side Bolsters, Heating and Cooling		1,879.00
RADIO				**GROUP 12**
	Base	AM/FM, CD, MP3 with Weatherband Radio. (Satellite Ready - Requires Parts Kit # 700960620 Satellite Radio Antenna to utilize Satellite Radio)		**In Base**
FACTORY INSTALLED VIRTUAL TERMINAL (OPTIONAL)				**GROUP 13**
115-TX07	700963370	C1000 - 7" Color Monitor, Mounted on Seat Armrest. Windrower Functions and Auto-Guide™ Capable		**In Base**
115-TX08	700963371	C2100- 12.1" Color Touch Screen Monitor, Mounted on Cab A Pillar, Windrower Functions and Auto-Guide™ Capable		1,516.00
FACTORY INSTALLED AUTO-GUIDE™3000 AUTO-STEERING (OPTIONAL)				**GROUP 14**
70-XR21	700961339	Auto-Guide™3000 **Decimeter** Accuracy Auto-Steering System (Includes: Roof Plate, Antenna, and Pigtail Harness) Displays in Existing C1000 Monitor or C3000 Monitor - OmniStar™ HP or XP Ready		8,715.00
15-VP01	700961318	C3000 Monitor Upgrade for Auto-Guide™ 3000 System 12.1" Color Touch Screen Monitor for Auto-Guide™ Functions Includes: Monitor, Harness and Mount		5,158.00

*Windrower must be factory ordered with an Auto-Guide™ 3000 Guidance System to upgrade to a C3000 monitor.

FACTORY INSTALLED TELEMETRY (OPTIONAL)				**GROUP 15**
65-TE01	700962850	AGCOMMAND™ with Antenna, Bracket, Harness and (1 year Advanced Subscription, Must be activated within 12 months of warranty registration)		2,492.00

WR9870 SELF-PROPELLED WINDROWER

Order Code	Catalog Number	Description	Approx. Weight(lb)	List Price
FIELD INSTALLED KITS - (order as desired)				**GROUP 99**
	700959233M	Windshield Wiper Kit		935.00
	700960626M	Beacon Light Kit		349.00
	700958144M	Tractor Coupler Kit		525.00
	700958145M	Header Coupler Kit		525.00
	700961624M	Tractor Single Point Quick Coupler Kit		707.00
	700961622M	Header Single Point Quick Coupler Kit		617.00
	700958054M*	Double Windrow Attachment Kit (Requires Auxiliary Hydraulic Kit - 700962488M) (Not Compatible with RearSteer equipped machines) *SUBJECT TO AVAILABILITY		11,358.00
	700962488M	Auxiliary Hydraulic Kit		2,286.00
	700961695M	Auxiliary Hose Kit (For BioMass Auger) (Requires Auxiliary Hydraulic Kit (700962488M) to install)		320.00
	700959625M	Rear Hitch Kit for Rollers		136.00
	700958068M*	DWA Tripler Kit *SUBJECT TO AVAILABILITY		3,665.00
	700962490M	Triple Windrow Attachment (Requires Auxiliary Hydraulic Kit - 700962488M) Rear Steer Units also Require Rear Steer/ Auxiliary Pump Combination Adapter Kit- 700962826M		13,487.00
	700958061M*	Offset Tail Wheel Kit *SUBJECT TO AVAILABILITY		4,553.00
	700959300M	Cab Suspension Air Compressor		600.00
	700959707M	Reel - Fore/Aft Tractor		204.00
	700959709M	Adapter Kit Draper/Auger Header		1,009.00
	700961626M	Rear End Counterbalance Weight Kit		960.00
	700962826M	Rear Steer/Auxiliary Pump Combination Adapter Kit (For use with Models equipped with RearSteer)		307.00
	700962858M	High Header Lift Kit for Draper Headers (3" Additional Lift Height)		327.00
	71428520M	Ship Safe Preservative Coating (Factory Applied) (Recommended for shipments occurring in November through March 31ST)		604.00
TECHNOLOGY KITS - (order as desired)				**GROUP 100**
	700744710M	C3000 Monitor Mounting Kit		153.00
	700746176M	C3000 Monitor Kit		5,158.00
	700960387M	Auto-Guide™ 3000 Mounting Kit		374.00
	700962851M	Telemetry Kit		3,189.00
		See Technology Section for Additional Options		
ORDER FROM PARTS				
	700959626	Field Light Kit		ORDER FROM PARTS
	700960620	Satellite Radio Antenna		ORDER FROM PARTS
	700962841	French Operators Manual and Decal Kit	2	No Charge
	700962839	Spanish Operators Manual and Decal Kit	2	No Charge

WR9860 SELF-PROPELLED WINDROWER

FOB Hesston, KS

STANDARD EQUIPMENT

AGCO Power™ Turbo-charged and Intercooled Diesel 4.9 CTA
SCR & Cooled EGR Emission Control System
4.9L 4 Cylinder Quadboost
Rated Horsepower: 197 at 2100 RPM
Maximum Horsepower: 208 at 1900 RPM
Variable Speed Ground Drive Motors
Electronically Actuated Parking Lock
High Capacity Electronically Controlled Header Drive Pump with Reverser
Automatic Header Safety Lock
Hydraulic Header Tilt
Precision Auto-Guide™ Ready
Electro-Hydraulic Steering
Adjustable Steering Sensitivity
Adjustable Rear Axle Casters
22 mph High Speed Ground Drive
Tinted Rear Window
V-Cool™ Hydraulic Auto-Cleaning and Cooling Package
Integrated C1000 Color Monitor
Two Large External Rear View Mirrors
Large Deluxe Cab with Air Conditioner and Heater
Tilt and telescoping Adjustable Steering Column
High Back Air Suspension Seat
Instructor Seat
Ground Level Maintenance
12-Volt Electrical System
130 Gallon Fuel Tank
Integrated Horn
AM/FM, CD, MP3 with Weatherband Radio (Satellite Ready) (Antenna Not Included)

Order Code	Catalog Number	Description	Approx. Weight(lb)	List Price

ONE ITEM FROM EACH GROUP MUST BE SPECIFIED UNLESS NOTED OTHERWISE

BASE MACHINE — GROUP 01

MFWR9860	700963377	WR9860 Self Propelled Windrower	127,310.00

UPGRADE PACKAGE — GROUP 02

	MKT0311	Deluxe Hay Package Includes: Deluxe Wide Air Suspended Cab Automatic Climate Control GlideRider™ Suspended Axle Semi-Active Seat, Gray Fabric with Stitching; Leather Side Bolsters, Heating and Cooling	6,715.00
	MKT0371	Premium Grain Package Includes: Deluxe Wide Air Suspended Cab Automatic Climate Control GlideRider™ Suspended Axle Semi-Active Seat, Gray Fabric with Stitching; Leather Side Bolsters, Heating and Cooling Windshield Wiper Reel Fore/Aft Rear End Counterbalance Weight Quick Connect Coupler- Single Point (Required for 5300 Header) Adapter Kit Draper/Auger Header	10,460.00

STEERING — GROUP 03

50-D023	700962828	High Speed Transport, Standard Steering - 22 MPH	**In Base**
50-D024	700962825	RearSteer High Speed Transport - 24.5 MPH	5,424.00

REAR HITCH — GROUP 04

80-S702	700961638	Pivoting Hitch(Available with RearSteer option only)	1,124.00
80-S701	700959624	Rear Hitch for Rollers	132.00

CAB OPTIONS — GROUP 05

20-UC03	700963368Y	Deluxe Rigid Mount Cab	**In Base**
20-UC02	700963367Y	Deluxe Wide Air Suspended Cab	1,642.00

CAB CLIMATE CONTROLS — GROUP 06

30-AQ02	700957385	Manual Climate Control	**In Base**
30-AQ04	700956913	Automatic Climate Control	828.00

REAR AXLE — GROUP 07

55-EE01	700961640	Rigid Axle	**In Base**
55-EE02	700961639	GlideRider™ Suspended Axle	2,366.00

Dealers are Required to have EDT Tool Before ordering WR Windrowers.

HESSTON by MASSEY FERGUSON

WR9860 SELF-PROPELLED WINDROWER

Order Code	Catalog Number	Description	Approx. Weight(lb)	List Price
QUICK COUPLERS				**GROUP 08**
60-GC01	700962037	Less Quick Couplers		**In Base**
60-GC03	700962039	Quick Connect Coupler- Single Point (Required for 5300 Header - Adaptable for Rotary Headers)		670.00
TIRE OPTIONS				**GROUP 09**
75-S106	700956981	23.1 x 26 Bias Turf Tires with 14L x 16.1 Rear		5,669.00
75-S116	700958655	23.1 x 26 Bias Turf Tires with 16.5L x 16.1 Rear		6,703.00
75-S117	700958066	23.1R26 Turf Radial Tires with 16.5L x 16.1 Rear		8,533.00
75-S119	700960032	620/75R26 Radial Bar (Alliance) with 16.5L x 16.1 Rear		8,554.00
75-S118	700960033	620/75R26 Radial Bar (Michelin) with 16.5L x 16.1 Rear		9,410.00
SEAT				**GROUP 10**
35-AE10	700960838	High Back Air Suspension Seat, Gray Fabric with Stitching		**In Base**
35-AE14	700960840	Semi-Active Seat, Gray Fabric with Stitching, Leather Side Bolsters, Heating and Cooling		1,879.00
RADIO				**GROUP 11**
	Base	AM/FM, CD, MP3 with Weatherband Radio. (Satellite Ready - Requires Parts Kit # 700960620 Satellite Radio Antenna to utilize Satellite Radio)		**In Base**
FACTORY INSTALLED VIRTUAL TERMINAL (OPTIONAL)				**GROUP 13**
115-TX07	700963370	C1000 - 7" Color Monitor, Mounted on Seat Armrest. Windrower Functions and Auto-Guide™ Capable		**In Base**
115-TX08	700963371	C2100- 12.1" Color Touch Screen Monitor, Mounted on Cab A Pillar, Windrower Functions and Auto-Guide™ Capable		1,516.00
FACTORY INSTALLED Auto-Guide™3000 AUTO-STEERING (OPTIONAL)				**GROUP 12**
70-XR21	700961339	Auto-Guide™ 3000 **Decimeter** Accuracy Auto-Steering System (Includes: Roof Plate, Antenna, and Pigtail Harness) Displays in Existing C1000 Monitor OmniStar™ HP or XP Ready		8,715.00
15-VP01	700961318	C3000 Monitor Upgrade for Auto-Guide™ 3000 System 12.1" Color Touch Screen Monitor for Auto-Guide™ Functions Includes: Monitor, Harness and Mount		5,158.00

*Windrower must be factory ordered with an Auto-Guide™ 3000 Guidance System to upgrade to a C3000 monitor.

FACTORY INSTALLED TELEMETRY - OPTIONAL				**GROUP 13**
65-TE01	700962850	AGCOMMAND™ with Antenna, Bracket, Harness and (1 year Advanced Subscription, Must be activated within 12 months of warranty registration)		2,492.00

WR9860 SELF-PROPELLED WINDROWER

Order Code	Catalog Number	Description	Approx. Weight(lb)	List Price
FIELD INSTALLED KITS - (order as desired)				**GROUP 99**
	700959233M	Windshield Wiper Kit		935.00
	700960626M	Beacon Light Kit		349.00
	700958144M	Tractor Coupler Kit		525.00
	700958145M	Header Coupler Kit		525.00
	700961624M	Tractor Single Point Quick Coupler Kit		707.00
	700961622M	Header Single Point Quick Coupler Kit		617.00
	700958054M*	Double Windrow Attachment Kit (Requires Auxiliary Hydraulic Kit - 700962488M) (Not Compatible with RearSteer equipped machines) *SUBJECT TO AVAILABILITY		11,358.00
	700962488M	Auxiliary Hydraulic Kit		2,286.00
	700961695M	Auxiliary Hose Kit (For BioMass Auger) (Requires Auxiliary Hydraulic Kit (700962488M) to install)		320.00
	700959625M	Rear Hitch Kit for Rollers		136.00
	700958068M*	DWA Tripler Kit *SUBJECT TO AVAILABILITY		3,665.00
	700962490M	Triple Windrow Attachment (Requires Auxiliary Hydraulic Kit - 700962488M) Rear Steer Units also Require Rear Steer/ Auxiliary Pump Combination Adapter Kit- 700962826M		13,487.00
	700958061M*	Offset Tail Wheel Kit *SUBJECT TO AVAILABILITY		4,553.00
	700959300M	Cab Suspension Air Compressor		600.00
	700959707M	Reel - Fore/Aft Tractor		204.00
	700959709M	Adapter Kit Draper/Auger Header		1,009.00
	700961626M	Rear End Counterbalance Weight Kit		960.00
	700962826M	Rear Steer/Auxiliary Pump Combination Adapter Kit (For use with Models equipped with RearSteer)		307.00
	700962858M	High Header Lift Kit for Draper Headers (3" Additional Lift Height)		327.00
	71428520M	Ship Safe Preservative Coating (Factory Applied) (Recommended for shipments occurring in November through March 31ST)		604.00
TECHNOLOGY KITS - (order as desired)				**GROUP 100**
	700744710M	C3000 Monitor Mounting Kit		153.00
	700746176M	C3000 Monitor Kit		5,158.00
	700960387M	Auto-Guide™ 3000 Mounting Kit		374.00
	700962851M	Telemetry Kit		3,189.00
		See Technology Section for Additional Options		
ORDER FROM PARTS				
	700959626	Field Light Kit		ORDER FROM PARTS
	700960620	Satellite Radio Antenna		ORDER FROM PARTS
	700962841	French Operators Manual and Decal Kit	2	No Charge
	700962839	Spanish Operators Manual and Decal Kit	2	No Charge

NOTE: Coupler Kits And Easy Attach Header Angle Kits Are Not Required, But Make Header Attachment Easier.

HESSTON by MASSEY FERGUSON

WR9840 SELF-PROPELLED WINDROWER

FOB Hesston, KS

STANDARD EQUIPMENT

AGCO Power™ Turbo-charged and Intercooled Diesel 4.4 CTA
SCR Emission Control System
4.4 Cylinder Engine
Rated Horsepower: 137 at 2100 RPM
Maximum Horsepower: 148 at 1900 RPM
Electronically Actuated Parking Lock
High Capacity Electronically Controlled Header Drive Pump with Reverser
Automatic Header Safety Lock
Hydraulic Header Tilt
Precision Auto-Guide™ Ready
Electro-Hydraulic Steering
Adjustable Steering Sensitivity
Adjustable Rear Axle Casters
Variable Speed Ground Drive Motors
Hydraulic Wheel Motor Shields
High Lift Links
Tinted Rear Window
V-Cool™ Hydraulic Auto-Cleaning and Cooling Package
Integrated C1000 Color Monitor
Two Large External Rear View Mirrors
Large Deluxe Cab with Air Conditioner and Heater
Tilt and Telescoping Adjustable Steering Column
High Back Air Suspension Seat
Instructor Seat
Ground Level Maintenance
12-Volt Electrical System
130 Gallon Fuel Tank
AM/FM, CD, MP3 with Weatherband Radio (Satellite Ready) (Antenna Not Included)

Order Code	Catalog Number	Description	Approx. Weight(lb)	List Price
		ONE ITEM FROM EACH GROUP MUST BE SPECIFIED UNLESS NOTED OTHERWISE		
BASE MACHINE				**GROUP 01**
MFWR9840	700963382	WR9840 Self Propelled Windrower		109,462.00
UPGRADE PACKAGE				**GROUP 02**
	MKT0352	Deluxe Hay Package Includes: Deluxe Wide Air Suspended Cab Automatic Climate Control GlideRider™ Suspended Axle Semi-Active Seat, Gray Fabric with Stitching, Leather Side Bolsters, Heating and Cooling		6,715.00
	MKT0353	Premium Grain Package Includes: Deluxe Wide Air Suspended Cab Automatic Climate Control GlideRider™ Suspended Axle Semi-Active Seat, Gray Fabric with Stitching, Leather Side Bolsters, Heating and Cooling Quick Connect Coupler- Single Point (Required for 5300 Header) Windshield Wiper Rear Hitch for Rollers Rear End Counterbalance Weight Reel Fore/Aft		9,583.00
STEERING				**GROUP 03**
50-D023	700962828	High Speed Transport, Standard Steering - 22 MPH		**In Base**
50-D024	700962825	RearSteer High Speed Transport - 24.5 MPH		5,424.00
REAR HITCH				**GROUP 04**
80-S702	700961638	Pivoting Hitch(Available with RearSteer option only)		1,124.00
80-S701	700959624	Rear Hitch for Rollers		132.00

Dealers are Required to have EDT Tool Before ordering WR Windrowers.

WR9840 SELF-PROPELLED WINDROWER

Order Code	Catalog Number	Description	Approx. Weight(lb)	List Price
TIRE OPTIONS				**GROUP 05**
75-S109	700958380	18.4 x 26 Bias Turf Tires with 14L x 16.1 Rear		3,923.00
75-S111	700958075	18.4R26 Bar with 14L x 16.1 Rear		5,181.00
75-S106	700956981	23.1 x 26 Bias Turf Tires with 14L x 16.1 Rear		5,669.00
75-S116	700958655	23.1 x 26 Turf Tires with 16.5L x 16.1 Rear		6,703.00
75-S117	700958066	23.1R26 Turf Radial Tires with 16.5L x 16.1 Rear		8,533.00
75-S119	700960032	620/75R26 Radial Bar (Alliance) with 16.5L x 16.1 Rear		8,554.00
75-S118	700960033	620/75R26 Radial Bar (Michelin) with 16.5L x 16.1 Rear		9,410.00
RADIO				**GROUP 07**
	Base	AM/FM, CD, MP3 with Weatherband Radio. (Satellite Ready - Requires Parts Kit # 700960620 Satellite Radio Antenna to utilize Satellite Radio)		**In Base**
FACTORY INSTALLED VIRTUAL TERMINAL (OPTIONAL)				**GROUP 13**
115-TX07	700963370	C1000 - 7" Color Monitor, Mounted on Seat Armrest. Windrower Functions and Auto-Guide™ Capable		**In Base**
115-TX08	700963371	C2100- 12.1" Color Touch Screen Monitor, Mounted on Cab A Pillar, Windrower Functions and Auto-Guide™ Capable		1,516.00
FACTORY INSTALLED Auto-Guide™3000 AUTO-STEERING (OPTIONAL)				**GROUP 08**
70-XR21	700961339	Auto-Guide™ 3000 **Decimeter** Accuracy Auto-Steering System (Includes: Roof Plate, Antenna, and Pigtail Harness) Displays in Existing C1000 Monitor OmniStar™ HP or XP Ready		8,715.00
15-VP01	700961318	C3000 Monitor Upgrade for Auto-Guide™ 3000 System 12.1" Color Touch Screen Monitor for Auto-Guide™ Functions Includes: Monitor, Harness and Mount		5,158.00

*Windrower must be factory ordered with an Auto-Guide™ 3000 Guidance System to upgrade to a C3000 monitor.

FACTORY INSTALLED TELEMETRY (OPTIONAL)				**GROUP 09**
65-TE01	700962850	AGCOMMAND™ with Antenna, Bracket, Harness and (1 year Advanced Subscription, Must be activated within 12 months of warranty registration)		2,492.00

WR9840 SELF-PROPELLED WINDROWER

Order Code	Catalog Number	Description	Approx. Weight(lb)	List Price
FIELD INSTALLED KITS - (order as desired)				**GROUP 99**
	700959233M	Windshield Wiper Kit		935.00
	700960626M	Beacon Light Kit		349.00
	700958144M	Tractor Coupler Kit		525.00
	700958145M	Header Coupler Kit		525.00
	700961624M	Tractor Single Point Quick Coupler Kit		707.00
	700961622M	Header Single Point Quick Coupler Kit		617.00
	700958054M*	Double Windrow Attachment Kit (Requires Auxiliary Hydraulic Kit - 700962488M) (Not Compatible with RearSteer equipped machines) *SUBJECT TO AVAILABILITY		11,358.00
	700962488M	Auxiliary Hydraulic Kit		2,286.00
	700961695M	Auxiliary Hose Kit (For BioMass Auger) (Requires Auxiliary Hydraulic Kit (700962488M) to install)		320.00
	700959625M	Rear Hitch Kit for Rollers		136.00
	700958068M*	DWA Tripler Kit *SUBJECT TO AVAILABILITY		3,665.00
	700962490M	Triple Windrow Attachment (Requires Auxiliary Hydraulic Kit - 700962488M) Rear Steer Units also Require Rear Steer/ Auxiliary Pump Combination Adapter Kit- 700962826M		13,487.00
	700958061M*	Offset Tail Wheel Kit *SUBJECT TO AVAILABILITY		4,553.00
	700959300M	Cab Suspension Air Compressor		600.00
	700959707M	Reel - Fore/Aft Tractor		204.00
	700961626M	Rear End Counterbalance Weight Kit		960.00
	700962826M	Rear Steer/Auxiliary Pump Combination Adapter Kit (For use with Models equipped with RearSteer)		307.00
	71428520M	Ship Safe Preservative Coating (Factory Applied) (Recommended for shipments occurring in November through March 31ST)		604.00
TECHNOLOGY KITS - (order as desired)				**GROUP 100**
	700744710M	C3000 Monitor Mounting Kit		153.00
	700746176M	C3000 Monitor Kit		5,158.00
	700960387M	Auto-Guide™ 3000 Mounting Kit		374.00
	700962851M	Telemetry Kit		3,189.00
		See Technology Section for Additional Options		
ORDER FROM PARTS				
	700959626	Field Light Kit		ORDER FROM PARTS
	700960620	Satellite Radio Antenna		ORDER FROM PARTS
	700962841	French Operators Manual and Decal Kit	2	No Charge
	700962839	Spanish Operators Manual and Decal Kit	2	No Charge

WR9740 SELF-PROPELLED WINDROWER

FOB Hesston, KS

STANDARD EQUIPMENT

AGCO Power™ Turbo-charged and Intercooled Diesel 4.9 CTA
SCR Emissions Control System
4.9 Liter. – 137 HP 4 Cylinder Engine
2-Speed Ground Drive Motors
Electronically Actuated Parking Lock
High Capacity Electronically Controlled Header Drive Pump with Reverser
Automatic Header Safety Lock
Hydraulic Header Tilt
Precision Auto-Guide™ Ready
Electro-Hydraulic Steering
Adjustable Steering Sensitivity
Adjustable Rear Axle Casters
V-Cool™ Hydraulic Auto-Cleaning and Cooling Package
Integrated C1000 Color Monitor
Two Large External Rear View Mirrors
Large Deluxe Cab with Air Conditioner and Heater
Tilt and Telescoping Adjustable Steering Column
High Back Air Suspension Seat
Instructor Seat
Ground Level Maintenance
12-Volt Electrical System
130 Gallon Fuel Tank
AM/FM, CD, MP3 with Weatherband Radio (Satellite Ready) (Antenna Not Included)

Order Code	Catalog Number	Description	Approx. Weight(lb)	List Price
ONE ITEM FROM EACH GROUP MUST BE SPECIFIED UNLESS NOTED OTHERWISE				
BASE MACHINE				**GROUP 01**
MFWR9740	700960554YF	WR9740 Self Propelled Windrower (Model Year 2015) . . .		98,214.00
UPGRADE PACKAGE				**GROUP 02**
	MKT0312	Upgrade Package Includes: . . . . . Deluxe Wide Air Suspended Cab Automatic Climate Control High Speed Transport GlideRider™ Suspended Axle Semi-Active Seat, Gray Fabric with Stitching; Leather Side Bolsters, Heating and Cooling		9,277.00
	MKT0315	Grain Swathing Package Includes: . . . . . Windshield Wiper Kit Tractor Coupler Kit Reel- Fore/Aft Tractor Kit		1,646.00
CAB OPTIONS				**GROUP 03**
20-UC03	700961337	Deluxe Rigid Mount Cab		**In Base**
20-UC02	700961336	Deluxe Wide Air Suspended Cab		1,563.00
CAB CLIMATE CONTROLS				**GROUP 04**
30-AQ02	700957385	Manual Climate Control		**In Base**
30-AQ04	700956913	Automatic Climate Control		828.00
GROUND DRIVE				**GROUP 05**
50-D013	700958095	Standard Speed Transport		**In Base**
50-D014	700958096	High Speed Transport		2,732.00
REAR AXLE				**GROUP 06**
55-EE01	700956978	Rigid Axle		**In Base**
55-EE02	700956977	GlideRider™ Suspended Axle		2,366.00

SUBJECT TO AVAILABILITY

Dealers are Required to have EDT Tool Before ordering WR Windrowers.

WR9740 SELF-PROPELLED WINDROWER

Order Code	Catalog Number	Description	Approx. Weight(lb)	List Price
TIRE OPTIONS				**GROUP 07**
75-S109	700958380	18.4 x 26 Bias Turf Tires with 14L x 16.1 Rear		3,923.00
75-S111	700958075	18.4R26 Bar with 14L x 16.1 Rear		5,181.00
75-S106	700956981	23.1 x 26 Bias Turf Tires with 14L x 16.1 Rear		5,669.00
75-S116	700958655	23.1R26 Turf Tires with 16.5L x 16.1 Rear		6,703.00
75-S117	700958066	23.1R26 Turf Radial Tires with 16.5L x 16.1 Rear		8,533.00
75-S119	700960032	620/75R26 Radial Bar (Alliance) with 16.5L x 16.1 Rear		8,554.00
75-S118	700960033	620/75R26 Radial Bar (Michelin) with 16.5L x 16.1 Rear		9,410.00
SEAT				**GROUP 08**
35-AE10	700958091	High Back Air Suspension Seat, Gray Fabric with Stitching		**In Base**
35-AE14	700958093	Semi-Active Seat, Gray Fabric with Stitching, Leather Side Bolsters, Heating and Cooling		1,788.00
FACTORY INSTALLED Auto-Guide™ 3000 AUTO-STEERING (OPTIONAL)				**GROUP 09**
70-XR21	700961339	Auto-Guide™ 3000 **Decimeter** Accuracy Auto-Steering System (Includes: Roof Plate, Antenna, and Pigtail Harness) Displays in Existing C1000 Monitor		8,715.00
15-VP01	700961318	C3000 Monitor Upgrade for Auto-Guide™ 3000 System Includes: Monitor, Harness and Mount		5,158.00
FACTORY INSTALLED TELEMETRY (OPTIONAL)				**GROUP 10**
65-TE01	700958139	AGCOMMAND™ with Antenna, Bracket, Harness and (1 year Advanced Subscription, Must be activated within 12 months of warranty registration)		2,492.00

*Windrower must be factory ordered with an Auto-Guide™ 3000 Guidance System to upgrade to a C3000 monitor.

SUBJECT TO AVAILABILITY

WR9740 SELF-PROPELLED WINDROWER

Order Code	Catalog Number	Description	Approx. Weight(lb)	List Price
FIELD INSTALLED KITS - (order as desired)				**GROUP 99**
	700959233M	Windshield Wiper Kit		935.00
	700960626M	Beacon Light Kit		349.00
	700958144M	Tractor Coupler Kit		525.00
	700958145M	Header Coupler Kit		525.00
	700958054M	Double Windrow Attachment Kit (Requires Auxiliary Hydraulic Kit - 700962488M) (Not Compatible with RearSteer equipped machines)		11,358.00
	700959625M	Rear Hitch Kit for Rollers		136.00
	700958059M	Auxiliary Hydraulic Kit		2,286.00
	700958061M	Offset Tail Wheel Kit		4,553.00
	700959300M	Cab Suspension Air Compressor		600.00
	700959065M	Easy Attach Header Angle Kit		83.00
	700959707M	Reel - Fore/Aft Tractor		204.00
	700958138M	AGCOMMAND Standard Plus Installation Kit		2,946.00
	700958068M	DWA Tripler Kit		3,665.00
	700961621M	Single Point Quick Coupler Kit (Requires Update Package 700961620M)		709.00
	700960387M	Auto-Guide™ 3000 Mounting Kit - For Wide Cab		374.00
	71428520M	Ship Safe Preservative Coating (Factory Applied) (Recommended for shipments occurring in November through March 31ST)		604.00

ORDER FROM PARTS

	700959626	Field Light Kit		ORDER FROM PARTS
	700960051	Horn Kit		ORDER FROM PARTS
	700960620	Satellite Radio Antenna		ORDER FROM PARTS
	700960129	French Operators Manual and Decal Kit	2	No Charge
	700960130	Spanish Operators Manual and Decal Kit	2	No Charge

SUBJECT TO AVAILABILITY

The Following Items are Required to Mount a 5300 Draper Header to a WR9700 Windrower:

- WR9700 Main Controller Software Verison 1.4.0 and VT Software 1.3.0 or later.
- Single Point Quick Coupler Kit (700961621M)
- Update Package (700961620M)
- High Pressure Auxiliary Manifold Relief Valve (700748026 from parts)
- Rear End Counterbalance Weight Kit (700961626M)

HEADERS

9196 ROTARY HEADER

for WR9770, WR9760, WR9870, WR9860

FOB Hesston, KS

STANDARD EQUIPMENT

16' (4.9m) Twin Max™ Conditioner Disc Header
10 Discs (2500 RPM)
20 Knives (2 per disc), Swing-away, Reversible
¾" to 3" (0m to .1m) Cutting Height
RazorBar™ Cast Modular Cutterbar
Modular Spur Gear Cutterbed Design
Turbulence Reduction Roll with Incorporated Augers
Dual Hydraulic Drive Motors
Hydraulic Roll Tension
Hay Conditioner Rolls:
  4 Herringbone Steel on Steel Conditioning Rolls
  Conditioner Roll Length – 110" (2.8m)
  Roll Speed – 1290 RPM
Two Adjustable Skid Shoes
Smooth Center Split Rock Guards
Top Shield Protector

Order Code	Catalog Number	Description	Approx. Weight(lb)	List Price
ONE ITEM FROM EACH GROUP MUST BE SPECIFIED UNLESS NOTED OTHERWISE				
BASE MACHINE				**GROUP 01**
MF9196	700959172YH	9196 16' (4.9m) Rotary Header	4535	50,155.00
FIELD INSTALLED KITS - (order as desired)				**GROUP 99**
	MK11284	Electric Swathboard Actuator Kit . . . . . Recommended for use with TWA- Kit # 700962490M	35	869.00
	MK11285	Steel Gauge Wheels (For use with 16' Rotary Headers) . .	140	880.00
	700958746M	Filler Pan Kit . . . . . For use with DWA to Close the Gap between the Cutterbar and the Front "Helper" Roll		144.00
.	700958144M	Tractor Coupler Kit	30	525.00
	700958145M	Header Coupler Kit*	30	525.00
	700961622M	Header Single Point Quick Coupler Kit		617.00
	700961692M	Hydraulic Assist Kit . . . . . (For increased performance in Biomass or heavy crop conditions)		886.00
	71428520M	Ship Safe Preservative Coating (Factory Applied) . . . . . (Recommended for shipments occurring in November through March 31ST)		604.00
ORDER FROM PARTS				
	700207149	Crop Dividers		Order From Parts
	700736450	French Operators Manual and Decal Kit.	2	No Charge
	700736451	Spanish Operators Manual and Decal Kit.	2	No Charge

***NOTE: Header Coupler Kits Are Not Required, But Make Header Attachment Easier.**

HESSTON by MASSEY FERGUSON

9195 ROTARY HEADER

for WR9770, WR9760, WR9870, WR9860

FOB Hesston, KS

STANDARD EQUIPMENT

16' (4.9m) Single Conditioner Disc Header
10 Discs (2500 RPM)
20 Knives (2 per disc), Swing-away, Reversible
¾" to 3" (0m to .1m) Cutting Height
RazorBar™ Cast Modular Cutterbar
Modular Spur Gear Cutterbed Design
Turbulence Reduction Roll with Incorporated Augers
Dual Hydraulic Drive Motors
Hydraulic Roll Tension
Hay Conditioner Rolls:
- 2 Herringbone Steel on Steel Conditioning Rolls
- Conditioner Roll Length – 110" (2.8m)
- Roll Speed – 1290 RPM

Two Adjustable Skid Shoes
Smooth Center Split Rock Guards
Top Shield Protector

Order Code	Catalog Number	Description	Approx. Weight(lb)	List Price
ONE ITEM FROM EACH GROUP MUST BE SPECIFIED UNLESS NOTED OTHERWISE				
BASE MACHINE				**GROUP 01**
MF9195	700959166YH	9195 16' (4.9m) Rotary Header		40,493.00
FIELD INSTALLED KITS - (order as desired)				**GROUP 99**
	MK11284	Electric Swathboard Actuator Kit Recommended for use with TWA- Kit # 700962490M	35	869.00
	MK11285	Steel Gauge Wheels	140	880.00
	700958746M	Filler Pan Kit For use with DWA to close the gap between the Cutterbar and the Front "Helper" Roll.		144.00
	700958144M	Tractor Coupler Kit	30	525.00
	700958145M	Header Coupler Kit *	30	525.00
	700961622M	Header Single Point Quick Coupler Kit		617.00
	700961692M	Hydraulic Assist Kit (For increased performance in Biomass or heavy crop conditions)		886.00
	71428520M	Ship Safe Preservative Coating (Factory Applied) (Recommended for shipments occurring in November through March 31ST)		604.00
ORDER FROM PARTS				
	700207149	Crop Dividers		Order From Parts
	700736450	French Operators Manual and Decal Kit	2	No Charge
	700736451	Spanish Operators Manual and Decal Kit	2	No Charge

***NOTE: Header Coupler Kits Are Not Required, But Make Header Attachment Easier.**

9186 ROTARY HEADER

for WR9770, WR9760, WR9870, WR9860

FOB Hesston, KS

STANDARD EQUIPMENT

13' (4.9m) Twin Max™ Conditioner Disc Header
8 Discs (2500 RPM)
16 Knives (2 per disc), Swing-away, Reversible
¾" to 3" (0m to .1m) Cutting Height
RazorBar™ Cast Modular Cutterbar
Modular Spur Gear Cutterbed Design
Turbulence Reduction Roll with Incorporated Augers
Dual Hydraulic Drive Motors
Hydraulic Roll Tension
Hay Conditioner Rolls:
  4 Herringbone Steel on Steel Conditioning Rolls
  Conditioner Roll Length – 110" (2.8m)
  Roll Speed – 1290 RPM
Two Adjustable Skid Shoes
Smooth Center Split Rock Guards
Top Shield Protector

Order Code	Catalog Number	Description	Approx. Weight(lb)	List Price
ONE ITEM FROM EACH GROUP MUST BE SPECIFIED UNLESS NOTED OTHERWISE				
BASE MACHINE				**GROUP 01**
MF9186	700960291YH	9186 13' (4.0m) Rotary Header		38,580.00
OPTIONAL FIELD ACCESSORIES				**GROUP 99**
	MK11284	Swathboard Actuator Kit Recommended for use with TWA- Kit # 700962490M	35	869.00
	700961693M	Hydraulic Assist Kit		964.00
	700958144M	Tractor Coupler Kit		525.00
	700958145M	Header Coupler Kit		525.00
	700961622M	Header Single Point Quick Coupler Kit		617.00
	700961694M	Bio Auger Kit (Double Conditioner Only) ***9186 Rotary Header Requires:*** Bio Auger Kit (700961694M) Hydraulic Assist Kit (700961693M) Filler Pan (700963050M) ***WR9770, WR9760, WR98760, WR9860 Windrowers Requires:*** Aux Hose Kit (700961695M) Aux Pump Kit (700962488M)		2,464.00
	700963050M	Filler Pan		237.00
	71428520M	Ship Safe Preservative Coating (Factory Applied) (Recommended for shipments occurring in November through March 31ST)		604.00
ORDER FROM PARTS				
	700207149	Crop Dividers		Order From Parts
	700741014	French Operators Manual and Decal Kit	2	No Charge
	700741012	Spanish Operators Manual and Decal Kit	2	No Charge

HESSTON by MASSEY FERGUSON

9183 ROTARY HEADER

for WR9770, WR9760, WR9870, WR9860

FOB Hesston, KS

STANDARD EQUIPMENT

13' (4.9m) Single Conditioner Disc Header
8 Discs (2500 RPM)
16 Knives (2 per disc), Swing-away, Reversible
¾" to 3" (0m to .1m) Cutting Height
RazorBar™ Cast Modular Cutterbar
Modular Spur Gear Cutterbed Design
Turbulence Reduction Roll with Incorporated Augers
Dual Hydraulic Drive Motors
Hydraulic Roll Tension
Hay Conditioner Rolls:
  2 Herringbone Steel on Steel Conditioning Rolls
  Conditioner Roll Length – 110" (2.8m)
  Roll Speed – 1290 RPM
Two Adjustable Skid Shoes
Smooth Center Split Rock Guards
Top Shield Protector

Order Code	Catalog Number	Description	Approx. Weight(lb)	List Price
ONE ITEM FROM EACH GROUP MUST BE SPECIFIED UNLESS NOTED OTHERWISE				
BASE MACHINE				**GROUP 01**
MF9183	700960197YH	9183 13' (4.0m) Rotary Header		31,300.00
FIELD INSTALLED KITS - (order as desired)				**GROUP 99**
	MK11284	Electric Swathboard Actuator Kit Recommended for use with TWA- Kit # 700962490M	35	869.00
	700958144M	Tractor Coupler Kit	30	525.00
	700958145M	Header Coupler Kit	30	525.00
	700961622M	Header Single Point Quick Coupler Kit		617.00
	700963050M	Filler Pan		237.00
	71428520M	Ship Safe Preservative Coating (Factory Applied) (Recommended for shipments occurring in November through March 31ST)		604.00
ORDER FROM PARTS				
	700207149	Crop Dividers		Order From Parts
	700741014	French Operators Manual and Decal Kit	2	No Charge
	700741012	Spanish Operators Manual and Decal Kit	2	No Charge

9146 TWINMAX AUGER HEADER

for WR9770, WR9760, WR9740, WR9735, WR9870, WR9860, WR9840

FOB Hesston, KS

STANDARD EQUIPMENT

14' (4.3m) and 16' (4.9m) TwinMax™ Double Sickle Auger Headers
Five Bat Reel
Pivoting Top Auger- 9” (.2m) Bottom Auger- 10” (.3m)
Hay Conditioners:
  4 Herringbone Steel on Steel Hay Conditioners
  Length: 110" (2.8m)
Hydraulic Tension on Front and Rear Rolls
Swath and Windrow Forming Shields
Adjustable Speed 42" (1.1m) Diameter Reel
Heavy Duty Segmented Tine Bar
Ball Bearings on Reel Tine Tubes
Auger Slip Clutch
Spare Sickle Storage
Vertical Wear Bar Guards
Adjustable Sickle Hold-Downs
Adjustable Forming Shields
Adjustable Lean Bar
Heavy Crop Reel Spiders

Order Code	Catalog Number	Description	Approx. Weight(lb)	List Price
ONE ITEM FROM EACH GROUP MUST BE SPECIFIED UNLESS NOTED OTHERWISE				
BASE MACHINE				**GROUP 01**
MF9146	700960285YH	9146 TwinMax™ Double Sickle Auger Headers		**In Base**
WORKING WIDTH				**GROUP 02**
1-14FOOT	700958985	14' (4.3m) TwinMax™ Double Conditioner Sickle Header	4100	37,421.00
1-16FOOT	700958986	16' (4.9m) TwinMax™ Double Conditioner Sickle Header	4100	39,297.00
HAY CONDITIONER				**GROUP 03**
15-H203	700958944	Steel on Steel Conditioner Rollers		**In Base**
FIELD INSTALLED KITS - (order as desired)				**GROUP 99**
	MK61139	Crop Divider Kit	50	282.00
	MK61158	Electric Swathboard Actuator Kit	14	825.00
	700958145M	Header Coupler Kit*	30	525.00
	700958144M	Tractor Coupler Kit	30	525.00
	700961622M	Header Single Point Quick Coupler Kit		617.00
	71428520M	Ship Safe Preservative Coating (Factory Applied) (Recommended for shipments occurring in November through March 31ST)		604.00
ORDER FROM PARTS				
	700730477	French Operators Manual and Decal Kit	2	No Charge
	700730478	Spanish Operators Manual and Decal Kit	2	No Charge

***NOTE: Header Coupler Kits Are Not Required, But Make Header Attachment Easier.**

HESSTON by MASSEY FERGUSON

9126 DUAL SICKLE AUGER HEADER

for WR9770, WR9760, WR9740, WR9735, WR9725, WR9870, WR9860, WR9840

FOB Hesston, KS

STANDARD EQUIPMENT

Pivoting Top Auger - 9” (.2m) Bottom Auger- 10” (.3m)
110" (2.8m) Fully Engaging Hay Conditioner
Rubber on Steel or Herringbone Steel on Steel
Hydraulic Roll Tension
Swath and Windrow Forming Shields
Adjustable Speed 42" (1.1m) Diameter Reel
Heavy Duty Segmented Tine Bar
Sealed Ball Bearings on Reel Tine Tubes
Auger Slip Clutch
Spare Sickle Storage
Vertical Wear Bar Guards
Adjustable Sickle Hold-Downs
Non-Metallic End Shields
Adjustable Lean Bar
Heavy Duty Reel
Hydraulic Drive Motor

Order Code	Catalog Number	Description	Approx. Weight(lb)	List Price
ONE ITEM FROM EACH GROUP MUST BE SPECIFIED UNLESS NOTED OTHERWISE				
BASE MACHINE				**GROUP 01**
MF9126	700960280YH	9126 Double Sickle Auger Header	4100	30,865.00
WORKING WIDTH				**GROUP 02**
1-14FOOT	700955205	14' (4.3m) Auger Header with Reel	4100	No Charge
1-16FOOT	700955206	16' (4.3m) Auger Header with Reel	4350	1,093.00
1-18FOOT	700955207	18' (5.5m) Auger Header with Reel	4615	1,422.00
HAY CONDITIONER				**GROUP 03**
10-H203	700953198	Steel on Steel Conditioner Rollers		**In Base**
10-H201	700953197	Rubber on Steel Conditioner Rollers		No Charge
FIELD INSTALLED KITS - (order as desired)				**GROUP 99**
	MK61139	Crop Divider Kit	50	282.00
	MK61158	Electric Swathboard Actuator Kit	14	825.00
	700958145M	Header Coupler Kit*	30	525.00
	700958144M	Tractor Coupler Kit	30	525.00
	700961622M	Header Single Point Quick Coupler Kit		617.00
	71428520M	Ship Safe Preservative Coating (Factory Applied) (Recommended for shipments occurring in November through March 31ST)		604.00
ORDER FROM PARTS				
	700737185	French Operators Manual and Decal Kit	2	No Charge
	700737186	Spanish Operators Manual and Decal Kit	2	No Charge

***NOTE: Header Coupler Kits Are Not Required, But Make Header Attachment Easier.**

5300 DRAPER HEADER

for WR9770, WR9760, WR9740, WR9735, WR9725, WR9870, WR9860, WR9840

Primary Color; Grey

FOB Hesston, KS

STANDARD EQUIPMENT

Center Delivery Sizes: 20 ft., 25 ft., 30 ft., 35 ft., 40 ft.
Shiftable Sizes: 25 ft., 30 ft., 35 ft., 40 ft.
(Self Cleaning Slide Rails)
Schumacher Hydrostatic Double Knife Drive
Gearbox 1460 Strokes per Minute (730 rpm)
Rubberized Drapers with Reinforcing Slats
Drapers: Hydrostatically Driven with In-Cab Speed Control
Swath Opening: 78.5“ (2.0m) Center and Side Delivery Position
Double Heat Treated, Extended Tang Sickle Guard
Heavy Duty Knife Guards and Adjustable Hold Downs
Reel and Draper Belts Installed from Factory
Header Single Point Quick Connect Kit
Heavy Duty Single Piece Reel with Longer HD tines
Reel Drive: Auto Reel Speed Feature
Rubber Coated Drive Rolls with V-Guide Belt Slot
Electric Reel Fore/Aft Control
Reel Drive Gearbox (Chain-less drive)
Cutterbar Poly Skids Standard
Hydraulic Deck Shift, Inside Cab Controlled
Adjustable Draper Belt Tension

Order Code	Catalog Number	Description	Approx. Weight(lb)	List Price

ONE ITEM FROM EACH GROUP MUST BE SPECIFIED UNLESS NOTED OTHERWISE

BASE MACHINE			**GROUP 01**
MF5300-20	700962016YH	20' (6.1m) Draper Header	**In Base**
MF5300-25	700962020YH	25' (7.6m) Draper Header	**In Base**
MF5300-30	700962024YH	30' (9.1m) Draper Header	**In Base**
MF5300-35	700962028YH	35' (10.7m) Draper Header	**In Base**
MF5300-40	700962032YH	40' (12.2m) Draper Header (Single Piece Reel)	**In Base**

SINGLE / DOUBLE KNIFE (CENTER DELIVERY / DOUBLE SWATH)			**GROUP 02**
H118	700961166	20' (6.1m) Double Knife / Center Delivery	50,909.00
H117	700961347	25' (7.6m) Single Knife / Center Delivery	46,111.00
H119	700961348	25' (7.6m) Single Knife / Double Swath	47,490.00
H118	700961346	25' (7.6m) Double Knife / Center Delivery	52,546.00
H120	700961168	25' (7.6m) Double Knife / Double Swath	58,096.00
H117	700961350	30' (9.1m) Single Knife / Center Delivery	50,544.00
H119	700961351	30' (9.1m) Single Knife / Double Swath	52,626.00
H118	700961349	30' (9.1m) Double Knife / Center Delivery	54,326.00
H120	700961140	30' (9.1m) Double Knife / Double Swath	63,831.00
H118	700961352	35' (10.7m) Double Knife / Center Delivery	63,971.00
H120	700961171	35' (10.7m) Double Knife / Double Swath	68,535.00
H118	700961353	40' (12.2m) Double Knife / Center Delivery	64,080.00
H120	700961172	40' (12.2m) Double Knife / Double Swath	68,904.00

MASSEY FERGUSON®

5300 DRAPER HEADER

Order Code	Catalog Number	Description	Approx. Weight(lb)	List Price
SICKLE AND GUARDS				**GROUP 03**
H511	700961145	20' (6.1m) Double Knife / Standard Sickle		No Charge
H513	700961358	20' (6.1m) Double Knife / Schumacher Sickle.		No Charge
H510	700961354	25' (7.6m) Single Knife / Standard Sickle		No Charge
H512	700961360	25' (7.6m) Single Knife / Schumacher Sickle		No Charge
H511	700961147	25' (7.6m) Double Knife / Standard Sickle		No Charge
H513	700961359	25' (7.6m) Double Knife / Schumacher Sickle.		No Charge
H510	700961355	30' (9.1m) Single Knife / Standard Sickle		No Charge
H512	700961357	30' (9.1m) Single Knife / Schumacher Sickle		No Charge
H511	700961149	30' (9.1m) Double Knife / Standard Sickle		No Charge
H513	700961356	30' (9.1m) Double Knife / Schumacher Sickle.		No Charge
H511	700961150	35' (10.7m) Double Knife / Standard Sickle		No Charge
H513	700961361	35' (10.7m) Double Knife / Schumacher Sickle.		No Charge
H511	700961152	40' (12.2m) Double Knife / Standard Sickle		No Charge
H513	700961362	40' (12.2m) Double Knife / Schumacher Sickle.		No Charge

5300 DRAPER HEADER

Order Code	Catalog Number	Description	Approx. Weight(lb)	List Price
FIELD INSTALLED				**GROUP 99**
	700959222M	Swivel Gauge Wheels (20' to 40') . . . . . (Outboard mounting and will allow the gauge wheels to be in direct ground contact, while turning and can be used on rolling terrain.)		1,646.00
	700961182M	Gauge Wheels Kit (30' to 40')		1,570.00
	71396012	Parking Stand (Required to Disconnect . . . . . Header if Gauge Wheels are not Ordered)	32	226.00
	700961141M	Insert, Narrow Opening Kit . . . . . (Reduces opening by 11" (.3m)		318.00
	700961183M	Slow Speed Transport Kit for 30' Only . . . . . (Acts as gauge wheel when in cutting position)		4,315.00
	700961365M	Slow Speed Transport Kit for 35' / 40' Only . . . . . (Acts as gauge wheel when in cutting position)		4,315.00
	700961142M	Skid Shoe Kit		622.00
	700962375M	Double Knife Stub Guard Kit, 20'		1,600.00
	700962376M	Single Knife Stub Guard Kit, 25'		1,875.00
	700962378M*	Base Stub Guard Kit, 5'		435.00
	71428520M	Ship Safe Preservative Coating (Factory Applied) . . . . . (Recommended for shipments occurring in November through March 31ST)		604.00

Note: Order additional 5' stub guard Kits as Required to Reach Desired Footage (works with both double and single knife stub guard kits).

ORDER FROM PARTS

700747680	Crop Divider (PVC Pipe - order two per head)		ORDER FROM PARTS

Note: Cross Auger Kits are now offered through AGShield 1 - (204) 539-2000

The Following Items are Required to Mount a 5300 Draper Header to a WR9700 Windrower:

- WR9700 Main Controller Software Verison 1.4.0 and VT Software 1.3.0 or later.
- Single Point Quick Coupler Kit (700961621M)
- Update Package (700961620M)
- High Pressure Auxiliary Manifold Relief Valve (700748026 from parts)
- Rear End Counterbalance Weight Kit (700961626M)

MOWERS

DISC MOWER CONDITIONERS

FOB Hesston, KS

PRODUCT INFORMATION

Model	**1386**	**1383**
Width of Cut	16’ (4.9m)	13' (3.9m)
Windrow/ Swath Width	40" to 96" (1m to 2.4m)	40" to 96" (1m to 2.4m)
Pivot	Center	Center
Cutting Height: Minimum Maximum	 3/4“ (19mm) 3" (76mm)	 3/4” (19mm) 3" (76mm)
Horsepower (minimum requirements)	120	100
PTO (RPM)	1000	1000
Tires:	31x13.5-15	31x13.5-15

Model	**1366**	**1363**	**1359**
Width of Cut	9' 10" (2.8m)	9' 10" (2.8m)	9'3" (2.8m)
Windrow/ Swath Width	42" to 73" (1.1m to 1.9m)	42" to 73" (1.1m to 1.9m)	30" to 72" (.8m to 1.8m)
Pivot	Center	Side	Side
Cutting Height: Minimum	0"	0"	1.3" (0m)
Maximum	8" (.2m)	8" (.2m)	3" (.1m)
Horsepower	75	75	60
(minimum requirements)			
PTO (RPM)	540	540	540
Tires:	11Lx15 std. or 31x13.5-15 opt.	11Lx15 std. or 31x13.5-15 opt.	9.5Lx14

HESSTON by MASSEY FERGUSON

1386 CENTER PIVOT DISC MOWER CONDITIONER

FOB Hesston, KS

STANDARD EQUIPMENT

RazorBar Cast Modular Cutterbar
Working Width 16‘ (4.9m)
10 Discs (2450 RPM)
Disc diameter 24.5"
Modular Spur Gear Cutterbed Design
Swath Width 40" to 96" (1m to 2.4m)
Transport Width 16.25 ft (5m)
31 x 13.5 x 15 Tires
Disc Drive - 4HA Banded Belt to End of Cutterbed
20 Knives - Swing-away, Reversible
1000 PTO - Gearbox Swivel Hitch w/ Slip Overrunning Clutch
Cutting Height 3/4“ to 3" (19mm- 76mm)
Smooth Rock Guards
Top Shield Protector
1-5/8” 21 Spline PTO Shaft
Conditioner Drive -Enclosed Spur Gear with U-Joint Drive Shafts
110" (2.8m) Roller Conditioner Herringbone Steel on Steel Rolls
110" (2.8m) Rubber on Steel Herringbone Rolls Optional
110" (2.8m) Turbulence Reduction Roll
Hydraulic Conditioner Roll Tension
Auto Header Tilt with Lower Feature- Hydraulic Adjust
Roading Lock
Hitch Jack
Hydraulic Tongue Control
Two Adjustable Skid Shoes

Tractor Requirements
120 PTO HP minimum with Fully Enclosed ROPS Cab
Two Double Acting Remote Valves

Order Code	Catalog Number	Description	Approx. Weight(lb)	List Price
ONE ITEM FROM EACH GROUP MUST BE SPECIFIED UNLESS NOTED OTHERWISE				
BASE MACHINE				**GROUP 01**
MF1386	700960607YH	1386 Disc Mower Conditioner		51,171.00
HAY CONDITIONER (One option must be selected)				**GROUP 02**
H203	700959295	Steel on Steel Conditioning Rolls		**In Base**
H201	700959294	Rubber on Steel Conditioning Rolls		No Charge
HITCH - Required (Can not be ordered Loose)				**GROUP 03**
	700960623M	3-Point Swivel Hitch	295	No Charge
	700960624M	Drawbar Swivel Hitch (Not compatible with Category 4 Drawbar)	280	No Charge
FIELD INSTALLED KITS - (order as desired)				**GROUP 99**
	MK11285	Steel Gauge Wheels		880.00
	700958746M	Filler Pan		144.00
	700960605M	Drawbar Hitch Kit*		1,697.00
	700960610M	3-Point Hitch Kit		1,469.00
	71428520M	Ship Safe Preservative Coating (Factory Applied) (Recommended for shipments occurring in November through March 31ST)		604.00
ORDER FROM PARTS				
	700749702	1-3/4" 20 spline PTO Yoke		ORDER FROM PARTS
	700747903	French Operators Manual and Decal Kit	2	No Charge
	700747905	Spanish Operators Manual and Decal Kit	2	No Charge

***FOR CATEGORY 4 DRAWBAR, ORDER 3-POINT HITCH KIT**

1383 CENTER PIVOT DISC MOWER CONDITIONER

FOB Hesston, KS

STANDARD EQUIPMENT

RazorBar Cast Modular Cutterbar
Working Width 13‘ (3.9m)
8 Discs (2450 RPM)
Disc diameter 24.5"
Modular Spur Gear Cutterbed Design
Swath Width 40" to 96" (1m to 2.4m)
Transport Width 159" (4.0m)
31 x 13.5 x 15 Tires
Disc Drive - 4HA Banded Belt to End of Cutterbed
16 Knives - Swing-away, Reversible
1000 PTO - Gearbox Swivel Hitch w/ Slip Overrunning Clutch
Cutting Height 3/4“ to 3" (19mm- 76mm)
Smooth Rock Guards
Top Shield Protector
1-5/8” 21 Spline PTO Shaft
Conditioner Drive - Enclosed Spur Gear with U-Joint Drive Shafts
110" (2.8m) Rubber on Steel Herringbone Rolls
110" (2.8m) Roller Conditioner Herringbone Steel on Steel Rolls- Optional
110" (2.8m) Turbulence Reduction Roll
Hydraulic Conditioner Roll Tension
Auto Header Tilt with Lower Feature- Hydraulic Adjust
Roading Lock
Hitch Jack
Hydraulic Tongue Control

Tractor Requirements
100 PTO HP minimum with Fully Enclosed ROPS Cab
Two Double Acting Remote Valves

Order Code	Catalog Number	Description	Approx. Weight(lb)	List Price

ONE ITEM FROM EACH GROUP MUST BE SPECIFIED UNLESS NOTED OTHERWISE

BASE MACHINE				**GROUP 01**
MF1383	700960603YH	1383 Disc Mower Conditioner		42,753.00
HAY CONDITIONER (One option must be selected)				**GROUP 02**
H201	700959294	Rubber on Steel Conditioning Rolls		**In Base**
H203	700959295	Steel on Steel Conditioning Rolls		No Charge
HITCH - Required (Can not be ordered Loose)				**GROUP 03**
	700960623M	3-Point Swivel Hitch	295	No Charge
	700960624M	Drawbar Swivel Hitch (Not compatible with Category 4 Drawbar)	280	No Charge
FIELD INSTALLED KITS - (order as desired)				**GROUP 99**
	700958143M	High Skid Shoes		347.00
	700960605M	Drawbar Hitch Kit*		1,697.00
	700960610M	3-Point Hitch Kit		1,469.00
	700963050M	Filler Pan		237.00
	71428520M	Ship Safe Preservative Coating (Factory Applied) (Recommended for shipments occurring in November through March 31ST)		604.00

***FOR CATEGORY 4 DRAWBAR, ORDER 3-POINT HITCH KIT**

ORDER FROM PARTS

	700749702	1-3/4" 20 spline PTO Yoke		ORDER FROM PARTS
	700747903	French Operators Manual and Decal Kit	2	No Charge
	700747905	Spanish Operators Manual and Decal Kit	2	No Charge

HESSTON by MASSEY FERGUSON

1366 CENTER PIVOT DISC MOWER CONDITIONER

FOB Hesston, KS

STANDARD EQUIPMENT

9'10" (2.8m) Disc Mower Conditioner
6 Discs (2220 RPM)
12 Knives (2 per Discs) Swing- Away Reversible
0" to 8" (.2m) Cutting Height
RazorBar™ Cast Modular Cutterbar
Modular Spur Gear Cutterbed Design
Adjustable Spring Tension
Hydraulic Tongue Control
Conditioner Options:
- Tine Rolls
- Herringbone Steel on Steel Rolls
- Herringbone Rubber on Rubber Rolls
- Length 73" (1.9m)

Top Door Protector
Swivel Tongue

Tractor Requirements
75 PTO HP minimum with Fully Enclosed ROPS Cab
One Single Acting & One Double Acting Remote Valve

Order Code	Catalog Number	Description	Approx. Weight(lb)	List Price
ONE ITEM FROM EACH GROUP MUST BE SPECIFIED UNLESS NOTED OTHERWISE				
BASE MACHINE				**GROUP 01**
MF1366	700960308YH	1366 Base Center Pivot Disc Mower Conditioner		4,225.00
HAY CONDITIONER (One option must be selected)				**GROUP 02**
H203	700957595	Steel on Steel Conditioning Rolls		30,181.00
H204	700957596	Rubber on Rubber Conditioning Rolls		30,181.00
H206	700956876	Tine Conditioning Rolls		28,201.00
H200	700957951	Less Hay Conditioner		25,875.00
TIRES				**GROUP 03**
B104	700956874	11L x 15 Tires		**In Base**
B106	700958134	31 x 13.5-15 Tires		404.00
REQUIRED HITCH OPTIONS- (one must be chosen) (Can not be ordered Loose)				**GROUP 04**
	700962470M	Drawbar Hitch, 1000 RPM		No Charge
	700962472M	Drawbar Hitch, 540 RPM		No Charge
	700962471M	3-Point Hitch, 1000 RPM		594.00
	700962473M	3-Point Hitch, 540 RPM		594.00
FIELD INSTALLED KITS - (order as desired)				**GROUP 99**
	700957954M	Hydraulic Header Tilt		153.00
	700962485M	Weight Kit		1,951.00
	71428520M	Ship Safe Preservative Coating (Factory Applied) (Recommended for shipments occurring in November through March 31ST)		604.00
ORDER FROM PARTS				
	700748726	Jack Stand Kit		ORDER FROM PARTS
	700207097	Aggressive Cage Kit (For improved crop flow)		ORDER FROM PARTS

1363 SIDE PULL DISC MOWER CONDITIONER

FOB Hesston, KS

STANDARD EQUIPMENT

9'10" (2.8m) Disc Mower Conditioner
6 Discs (2220 RPM)
12 Knives (2 per Discs) Swing- Away Reversible
0" to 8" (.2m) Cutting Height
Razor Bar™ Cast Modular Cutterbar
Modular Spur Gear Cutterbed Design
Adjustable Spring Tension
Hydraulic Tongue Control
Tine Roll Options:
- Herringbone Steel on Steel Rolls
- Herringbone Rubber on Rubber Rolls
- Length 73" (1.9m)

Top Door Protector
540 RPM PTO

Tractor Requirements
75 PTO HP minimum with Fully Enclosed ROPS Cab
One Single Acting & One Double Acting Remote Valve

Order Code	Catalog Number	Description	Approx. Weight(lb)	List Price
ONE ITEM FROM EACH GROUP MUST BE SPECIFIED UNLESS NOTED OTHERWISE				
BASE MACHINE				**GROUP 01**
MF1363	700960303YH	1363 Side Pull Base Mower Conditioner		**In Base**
HAY CONDITIONER (One option must be selected)				**GROUP 02**
H203	700957595	Steel on Steel Conditioning Rolls		30,181.00
H204	700957596	Rubber on Rubber Conditioning Rolls		30,181.00
H206	700956876	Tine Conditioning Rolls		28,201.00
H200	700957951	Less Hay Conditioner		25,875.00
TIRES				**GROUP 03**
B104	700956874	11L x 15 Tires		**In Base**
B106	700958134	31 x 13.5-15 Tires		404.00
FIELD INSTALLED KITS - (order as desired)				**GROUP 99**
	700958379M	Hydraulic Header Tilt		158.00
	71428520M	Ship Safe Preservative Coating (Factory Applied) (Recommended for shipments occurring in November through March 31ST)		604.00
ORDER FROM PARTS				
	700207097	Aggressive Cage Kit (For improved crop flow)		ORDER FROM PARTS

HESSTON
by MASSEY FERGUSON

1359 DISC MOWER CONDITIONER

FOB Hesston, KS

STANDARD EQUIPMENT

Cutting Width 9'3" (2.8m)
Mowing Elements- 7 Disc
Reversible Knives
540 RPM, 80 Degrees C.V. PTO Drive Shaft
Hydraulic Tongue Control
Mechanical Tongue Transport Lock
Hardened Skid Shoes
84" (2.1m) Conditioner Options:
  Rubber on Rubber - Powered Roll Opening
  Steel on Steel - Spring Tensioned
Adjustable Roll Tension
9.5L x 14 6 ply Flotation Tires
Highway Transport Chain
Overrunning / Slip Clutch Protection
3-Point Header Suspension

Tractor Requirements
60 PTO HP minimum with Fully Enclosed ROPS Cab
One Single Acting, One Double Acting Remote Valve

Order Code	Catalog Number	Description	Approx. Weight(lb)	List Price
ONE ITEM FROM EACH GROUP MUST BE SPECIFIED UNLESS NOTED OTHERWISE				
BASE MACHINE				**GROUP 01**
MF1359	700960299YH	1359 Mower Conditioner		**In Base**
HAY CONDITIONER				**GROUP 02**
H203	700956886	Steel on Steel Conditioning Rolls		27,908.00
H204	700956331	Rubber on Rubber Conditioning Rolls		28,927.00
FIELD INSTALLED KITS - (order as desired)				**GROUP 99**
	MKD11177	2" (.1m) Topping Skids (Set of 4)	20	242.00
	MK11176	Lighting Package		579.00
	71428520M	Ship Safe Preservative Coating (Factory Applied) (Recommended for shipments occurring in November through March 31ST)		604.00
ORDER FROM PARTS				
	700730707	French Operators Manual and Decal Kit	2	No Charge
	700730708	Spanish Operators Manual and Decal Kit	2	No Charge

REAR / FRONT 3-POINT HITCH MOUNTED MOWER

PRODUCT INFORMATION

FOB Baltimore, MD

	DM9314 (Rear)	DM9314 (Rear) Tine Conditioner	DM9314 (Rear) Tine Conditioner with Mergers
Width of Cut	30' 6" (9.3m)	30' 6" (9.3m)	30' 6" (9.3m)
Number of Disc	2 x 7	2 x 7	2 x 7
Windrow Swath Width	2 x 8' 3" (2 x 2.5m)	2 x 6' 1" - 10' 8" (2 x 1.85 - 3.25m)	2 x 7' 3"-8' 3" (2 x 2.2-2.5m)
Weight	4675 (2,120kg)	6240 (2,830kg)	7055 (3,200kg)
Horsepower (minimum requirements) (with Front Mower)	175 HP	200 HP	228 HP
PTO (RPM)	1000 PTO RPM	1000 PTO RPM	1000 PTO RPM
Hitch	Rear 3pt- Cat II & III	Rear 3pt- Cat II & III	Rear 3pt- Cat II & III
Hydraulic Requirements	2 Single Acting, 1 Double Acting	2 Single Acting, 1 Double Acting	4 Single Acting, 1 Double Acting
Assembly Time	6 Hours	6 Hours	7 Hours

	DM306 (Front)	DM306 (Front) Tine Conditioner
Width of Cut	9' 10" (3.0m)	9' 10" (3.0m)
Number of Disc	6	6
Windrow Swath Width	6' 8" (2.0m)	4' 9" - 7' 3" (1.45 - 2.2m)
Weight	2051 (930kg)	2536 (1,150kg)
Horsepower (minimum requirements)	75 HP	95 HP
PTO (RPM)	1000 PTO RPM	1000 PTO RPM
Hitch	Front 3pt with PTO- Cat II	Front 3pt with PTO- Cat II
Hydraulic Requirements	1 Single Acting, 1 Double Acting	1 Single Acting, 1 Double Acting
Assembly Time	Assembled	Assembled

NOTE: This is a general sales guide; for further product details and official specifications refer to product information guides and product literature.

MASSEY FERGUSON®

DM9314 REAR MOWER

FOB Baltimore, MD

STANDARD EQUIPMENT

Working Width: 30' 6" (9.3m)
Swath width: 2 x 8' 3" (2 x 2.5m) (no conditioner)
2 x (6' 1" to 10' 8") (2 x 1.85m to 3.25m) (tine conditioner)
Transport Width: 9' 1" (2.8m)
Transport Height: 12'10" (3.9m)
2 x 7 Disc
1000 RPM PTO
1 3/8" 21 Spline PTO yoke
Hitch Category: II and III
Turbo Lift Hydraulic Mower Flotation
Compact Modular Angle Cutterbar
Safety Swing Break-away Protection
Main Drives: Gearboxes and drive shafts
Overrunning Clutch
Drive GUARD Individual Disc Protection
Massey Ferguson Decal on Curtains

Tractor Requirements (with Front Mower):
175 HP (no conditioner)
200 HP (tine conditioner)
228 HP (tine conditioner with Mergers)
Load Sensing Hydraulics or 2 SAV, 1 DAV for Rear Mower
Plus 1 DAV and 1 SAV for Front Mower

Model Reference Chart

Old Model Number	Full Model Number (Decals & Publications)	Price Page Model
MFDM1398	DM 9314 TL	MFDM9314

PRIOR MODEL YEAR INVENTORY WILL BE CONSUMED BEFORE PRODUCTION OF NEW MODELS BEGINS.

Order Code	Catalog Number	Description	Approx. Weight(lb)	List Price

ONE ITEM FROM EACH GROUP MUST BE SPECIFIED UNLESS NOTED OTHERWISE
Must Be Ordered with a DM306 FRONT MOWER

BASE MACHINE — GROUP 01

DM9314	700963788	Rear 3-Point Hitch Mounted Mower w/ Tine Conditioner w/ Mergers	79,458.00
DM9314	700963786	Rear 3-Point Hitch Mounted Mower with Tine Conditioner	56,983.00
DM9314	700963787	Rear 3-Point Hitch Mounted Mower without Tine Conditioner	43,743.00

FACTORY INSTALLED VALVE OPTIONS - (must choose one) — GROUP 02

700960863	Electromagnetic 2/2 Way Valve ⊙	811.00
71436149M	Electro-Hydraulic Load Sensing Control Required for tractors with less than 5 DAV	3,752.00

FACTORY INSTALLED OPTION — GROUP 03

71445569	Protective Cover ◆	1,214.00

FIELD INSTALLED KITS - (order as desired) — GROUP 99

700960874	Additional Skid (Increases cutting height to 2.2" to 3.1" depending on spacers used- order at least 2 per cutterbar)	91.00
71440199	PTO Yoke 1 3/4" (20 Spline)	234.00
700963259	Filler Pan between Belt and Conditioner (Merger units only)	653.00
700963260	Mower Disc with Conveyor Wings (Aggressive rotor for improved feeding in heavy crop- order 2 per cutterbar to replace outside disc) *Non-merger units only	89.00
700963266	Crowned Drum Hat Kit (For improved feeding in heavy crop- order 1 kit per cutterbar)	32.00

*Protective Curtain must be ordered from parts when the tine conditioner is removed.

⊙For combined lifting of the Rear Mowers with 1 DAV

◆For use on the tine conditioner models while operating with conditioner removed

DM306 FRONT MOWER

FOB Baltimore, MD

STANDARD EQUIPMENT

Working Width: 9'10" (3.0m)
Swath Width: 6' 8" (2m) (no conditioner)
4' 9" to 7' 3" (1.5m to 2.2m) (tine conditioner)
Transport Width: 9'10" (3.0m)
Transport Length: 6' 2" (1.9m)
6 Disc
1000 RPM PTO
1 3/8" 21 Spline PTO yoke
Reversible Gearbox (CW or CCW)
Overrunning Clutch
Trailing Linkage Spring Flotation
Compact Modular Angle Cutterbar
Adjustable Cutting Height: 1.5" to 2.8" (0m to .1m)
Hydraulic Side Shift: 10" (.3m) right and left
Header Lift: Hydraulic Cylinder
Header Lift Height: 17" (.4m)
Header Suspension Travel: 22" (.6m)
Lateral Tilt: 26.4 Degrees
Drive GUARD Individual Disc Protection
Massey Ferguson Decal on Curtains

Tractor Requirements:
75 HP (no conditioner)
90 HP (tine conditioner)
1 DAV, 1 SAV
Front 3-Point Hitch
Front 1000 RPM PTO
1 3/8" 21 Spline PTO

Model Reference Chart

Old Model Number	Full Model Number (Decals & Publications)	Price Page Model
MFDM1340	DM 306 FZ	MFDM306F

PRIOR MODEL YEAR INVENTORY WILL BE CONSUMED BEFORE PRODUCTION OF NEW MODELS BEGINS.

Order Code	Catalog Number	Description	Approx. Weight(lb)	List Price

ONE ITEM FROM EACH GROUP MUST BE SPECIFIED UNLESS NOTED OTHERWISE

BASE MACHINE				**GROUP 01**
DM306F*	700963784	Front 3-Point Hitch Mounted Mower with Tine Conditioner		24,190.00
DM306F*	700963785	Front 3-Point Hitch Mounted Mower without Tine Conditioner		18,456.00
FACTORY INSTALLED				**GROUP 02**
	71445570	Protective Cover◆		570.00
FIELD INSTALLED KITS - (order as desired)				**GROUP 99**
	700960874	Additional Skid (Increases cutting height to 2.2" to 3.1" . . . . . depending on spacers used- order at least 2 per cutterbar)		91.00
	700963267	Swath Former (For Operation without Conditioner)		165.00
	700963260	Mower Disc with Conveyor Wings (Aggressive rotor for improved . . . . . feeding in heavy crop- order 2 per cutterbar to replace outside disc) *Non-merger units only		89.00
	700963266	Crowned Drum Hat Kit . . . . . (For improved feeding in heavy crop- order 1 kit per cutterbar)		32.00

◆ For use on the tine conditioner models while operating with conditioner removed.

***Note: DM306 can be ordered separately or used in conjunction with the DM9314 Rear Mower or a pull type Disc Mower Conditioner.**

MASSEY FERGUSON®

DISC MOWERS
PRODUCT INFORMATION
FOB Baltimore, MD

Professional Series
(MUST ORDER IN PAIRS OF 2 OF ANY COMBINATION)

	DM357	DM306	DM255
Width of Cut	11' 6" (3.5m)	9' 10" (3.0m)	8' 4" (2.55m)
Number of Discs	7	6	5
Swath Width:			
No Conditioner	7' 7" (2.3m)	5' 11" (1.8m)	5' 3" (1.6m)
Tine Conditioner	N/A	2' 11"- 6' 3"(1.35-1.9m)	2' 11"- 4' 7" (0.9-1.4m)
Roller Conditioner	N/A	N/A	3' 5" - 4' 7" (1.05- 1.4m)
Minimum HP Requirement			
No Conditioner	68 HP	61 HP	54 HP
With Conditioner	N/A	86 HP	75 HP
PTO (RPM)	540 RPM	540 RPM	540 RPM
Hitch	3 pt- Cat I & II	3 pt- Cat I & II	3 pt- Cat I & II
Weight:			
No Conditioner	1760 (798kg)	1596 (724kg)	1389 (630kg)
Tine Conditioner	N/A	2229 (1,011kg)	1947 (883kg)
Roller Conditioner	N/A	N/A	2161 (980kg)
Assembly Time	4 Hours	4 Hours	4 Hours

Farmer Series
(MUST ORDER IN PAIRS OF 2 OF ANY COMBINATION)

	DM287	DM246	DM205	DM164
Width of Cut	9'3" (2.82m)	7'11" (2.42m)	6'9" (2.06m)	5'5" (1.66m)
Number of Discs	7	6	5	4
Swath Width:				
No Conditioner	6' 7" (2.0m)	5' 5" (1.65m)	4' 1" (1.25m)	2' 11"' (0.9m)
Minimum HP Requirement				
No Conditioner	60 HP	50 HP	41 HP	30 HP
PTO (RPM)	540 RPM	540 RPM	540 RPM	540 RPM
Hitch	3 pt- Cat I & II	3 pt- Cat I & II	3 pt- Cat I & II	3 pt- Cat I & II
Weight:				
No Conditioner	1047 (475kg)	964 (437kg)	897 (407kg)	820 (372kg)
Assembly Time	4 Hours	4 Hours	4 Hours	4 Hours

NOTE: This is a general sales guide; for further product details and official specifications refer to product information guides and product literature.

Note: These Mowers Are Intended For Agricultural Use Only. They are Not Intended For Roadside Or Municipal Mowing

DM357 / DM306 / DM255

PROFESSIONAL SERIES DISC MOWERS
(MUST ORDER IN PAIRS OF 2 OF ANY COMBINATION)

FOB Baltimore, MD

STANDARD EQUIPMENT

Compact Modular Angle Gear Cutterbar
Spring-Loaded Anti-Collision Device
Cutterbar Drive Protection
Common Oil Reservoir
Lifetime Cutterbar Oil
PTO Shaft with Overrunning Clutch
Heavy Duty Skid Plate
Heavy Duty Main Frame
Hydraulic Lift Cylinder
Swath Disc Right
Outer Swathboard
Drive GUARD Cutterbar Protection
Massey Ferguson Decal on Curtains

Model Reference Chart

Old Model Number	Full Model Number (Decals & Publications)	Price Page Model
MFDM1362	DM 357-P	MFDM357
MFDM1361	DM 306-P	MFDM306
MFDM1358	DM 255-P	MFDM255

Note: These Mowers Are Intended For Agricultural Use Only. They are Not Intended For Roadside Or Municipal Mowing

PRIOR MODEL YEAR INVENTORY WILL BE CONSUMED BEFORE PRODUCTION OF NEW MODELS BEGINS.

Order Code	Catalog Number	Description	Approx. Weight(lb)	List Price

ONE ITEM FROM EACH GROUP MUST BE SPECIFIED UNLESS NOTED OTHERWISE

BASE MACHINE — **GROUP 01**

MFDM357	700963695	Disc Mower with 7 Disc and 11'6" (3.5m) Cut	15,407.00
MFDM306	700963694	Disc Mower with 6 Disc and 9'10" (2.8m) Cut	12,830.00
MFDM255	700963693	Disc Mower with 5 Disc and 8'4" (2.6m) Cut	11,761.00

FIELD INSTALLED KITS - (order as desired) — **GROUP 99**

	700960871	Swath Disc (left) for DM255, DM306	293.00
	700960873	Swath Guide (left) for DM357	449.00
	700960874	Adjustable High Skid (qty 5) for DM255 Adjustable High Skid (qty 6) for DM306 Adjustable High Skid (qty 7) for DM357	91.00
	700960875	Tine Conditioner for DM255	5,698.00
	700960877	Roller Conditioner for DM255	7,428.00
	700960876	Tine Conditioner for DM306	6,939.00
	700960878	Spreader Device for DM255	310.00
	700960879	Spreader Device for DM306	405.00
	700960881	Stone Guard for DM357	230.00

ORDER FROM PARTS

	FEL428929	Quick Hitch Adapter Kit (Cat II)	ORDER FROM PARTS

(IMPORTANT NOTE: Must order in pairs of 2 of any Combination)

MASSEY FERGUSON®

DM287 / DM246 / DM205 / DM164

FARMER SERIES DISC MOWERS
(MUST ORDER IN PAIRS OF 2 OF ANY COMBINATION)

FOB Baltimore, MD

STANDARD EQUIPMENT

Spur Gear Cutterbar
Spring-Loaded Anti-Collision Device
Folding Curtains
Parking Stand
Hydraulic Lift Cylinder
PTO Shaft with Overrunning Clutch
Swath Disc Right
Cat I and II Hitch
Cutterbar Drive Protection
Common Oil Bath
Solid Frame with Exterior Support
Outer Swathboard
Massey Ferguson Decal on Curtains

Model Reference Chart

Old Model Number	Full Model Number (Decals & Publications)	Price Page Model
MFDM1309	DM 287	MFDM287
MFDM1308	DM 246	MFDM246
MFDM1306	DM 205	MFDM205
MFDM1305	DM 164	MFDM164

Note: These Mowers Are Intended For Agricultural Use Only. They are Not Intended For Roadside Or Municipal Mowing

PRIOR MODEL YEAR INVENTORY WILL BE CONSUMED BEFORE PRODUCTION OF NEW MODELS BEGINS.

Order Code	Catalog Number	Description	Approx. Weight(lb)	List Price
		ONE ITEM FROM EACH GROUP MUST BE SPECIFIED UNLESS NOTED OTHERWISE		
BASE MACHINE				**GROUP 01**
MFDM287	700963693	Disc Mower with 7 Disc and 9'3" (2.8m) Cut	1047	10,312.00
MFDM246	700963691	Disc Mower with 6 Disc and 7'11" (2.2m) Cut	963	9,195.00
MFDM205	700963790	Disc Mower with 5 Disc and 6'9" (2.1m) Cut	897	8,195.00
MFDM164	700963789	Disc Mower with 4 Disc and 5'5" (1.7m) Cut	820	6,894.00
FIELD INSTALLED				**GROUP 02**
	700960868	Swath Guide (left) for DM164, DM205, DM246		624.00
	700960869	Swath Guide (left) for DM287		758.00
	700960870	Welded-on Skid . . . . . (Quantity of one per Disc is Required for Rocky Conditions)		35.00
ORDER FROM PARTS				
	FEL428928	Quick Hitch Adapter Kit . . . . . (Cat II - Cat III NARROW)		ORDER FROM PARTS
	FEL134764 FEL134765 FEL134768	High Cutting Skid. . . . . (Increases cut height by 2")		ORDER FROM PARTS

(IMPORTANT NOTE: Must order in pairs of 2 of any Combination)

RAKES AND TEDDERS

MASSEY FERGUSON®

V - WHEEL RAKES

FOB Marshfield, Wisconsin

PRODUCT INFORMATION

	1508	1510	1510S	1512	1512S
Rake Wheels	8	10	10	12	12
Working Widths	15' (4.6m) to 19' (5.8m)	18' (5.5m) to 22' (6.7m)	18' (5.5m) to 22' (6.7m)	20' (6.1m) to 24' (7.3m)	20' (6.1m) to 24' (7.3m)
Transport Width	8'6" (2.6m)	9'6" (2.9m)	10'8" (3.3m)	9'6" (2.9m)	12 (3.6m)
Transport Length	13' (4m)	15' 6"(4.8m)	19' (5.7m)	18'(5.5m)	21'6" (6.7m)
Adjustment Width	3' (.91m) to 5' (1.5M)	4' (1.2m) to 6' (1.8M)	4' (1.2m) to 6' (1.8M)	4' (1.2m) to 6' (1.8M)	4' (1.2m) to 6' (1.8M)
Weight (lbs.)	1125	1275	1670	1440	1860

STANDARD EQUIPMENT

55" (1.4m) Diameter Wheels (1508,1510,1512)
40 Teeth per Wheel, 7 mm Tooth Diameter (1508,1510,1512)
60" (1.5m) Diameter Wheels (1510S,1512S)
40 Teeth per Wheel, 7.5 mm Tooth Diameter (1510S,1512S)
Hydraulic Lift for Raising Rake Wheels
Wheel Hubs with Tapered Roller
Bearings and Dust Covers
2 Gauge/Transport Wheels
3 Positions for Raking (1508, 1510, 1512)
10 Positions for Raking (1510S, 1512S)
Variable Windrow Width from 36" to 60" (1508)
Variable Windrow Width from 48" to 72" (1.2m to 1.8m)
Hydraulic Fold
175/80 x 13 Tires - 1508, 1510 & 1512
205/75D15 Tires - 1510S & 1512S
Safety Chains
Jack

Order Code	Catalog Number	Description	Approx. Weight(lb)	List Price

ONE ITEM FROM EACH GROUP MUST BE SPECIFIED UNLESS NOTED OTHERWISE

BASE MACHINE — **GROUP 01**

MF1512	71436081	12 Wheel V-Rake.	1440	6,904.00
MF1512S	71482578	12 Super Wheel V-Rake, 10 Raking Positions with Transport . .	1860	8,009.00
MF1510	71436080	10 Wheel V-Rake.	1275	6,457.00
MF1510S	71482577	10 Super Wheel V-Rake, 10 Raking Positions with Transport . .	1670	7,533.00
MF1508	71436079	8 Wheel V-Rake.	1125	6,278.00

FIELD INSTALLED KITS - (order as desired) — **GROUP 99**

MK31236	Center Kicker Wheels Kit (For use with 1510 and 1512 only). .	682.00
71482581	Center Kicker Wheels Kit (For use with 1510S & 1512S only). .	715.00

Y - WHEEL RAKE

FOB Marshfield, Wisconsin

PRODUCT INFORMATION

SV415

Rake Wheels	15
Working Widths	Up to 25’ (7.62M)
Transport Width	10’ 4" (3.15M)
Transport Length	31’ 6" (9.6M)
Windrow Width	Up to 46"
Weight	3023 lbs.

STANDARD EQUIPMENT

55" (1.4m) Diameter Wheels
40 Teeth per Wheel
Front Hitch Jack
4 Wheel Tandem Axle
ST175/80D13 Tires
Safety Chains
Hydraulic Frame Width
Hydraulic Frame Angle
Overhead Frame Design
100% Width Coverage
Single Side Raking Capable

Tractors Requirements
12 Volt Power Source
40 HP (30kw) for SV415
2 Remote Valves Required
(1 Double Acting & 1 Single Acting)

Order Code	Catalog Number	Description	Approx. Weight(lb)	List Price

ONE ITEM FROM EACH GROUP MUST BE SPECIFIED UNLESS NOTED OTHERWISE

BASE MACHINE — **GROUP 01**

MFSV415	700963595	15 Wheel Y-Rake.		20,990.00

FIELD INSTALLED KITS - (order as desired) — **GROUP 99**

	71440337	Transport Lighting / Work Light		454.00

MASSEY FERGUSON®

BI-FOLD WHEEL RAKES

FOB Marshfield, Wisconsin

PRODUCT INFORMATION

HI-CAPACITY MODELS

	3986	3983
Raking		
-Positions	Infinite	Infinite
-Widths (ft)	Up to 28' (8.5m)	Up to 24' (7.3m)
Windrow		
-Widths (in)	38" to 58"	38" to 58"
-Widths (m)	(1.0m to 1.5m)	(1.0m to 1.5m)
Frame Fold	Hydraulic	Hydraulic
No. of Finger Wheels	14	12
Transport Wheels	6	4
DIMENSIONS and WEIGHTS		
Transport Width	8'1" (2.5m)	8' (2.4m)
Overall Length	27' 3" (8.3m)	24' 6"' (7.5m)
TRACTOR REQUIREMENTS		
Horsepower (min.)	40 HP (30 kw)	30 HP (22 kw)
Hydraulics	One Double Acting Remote and One Single Acting Remote	One Double Acting Remote and One Single Acting Remote

STANDARD EQUIPMENT

40 Teeth per Wheel
55" (1.4m) Diameter Wheels
Hydraulic Fold
6.70-15" (.2m to .4m) Tires
Transport Lights
Hydraulic Lift for Raising Rake Wheels
Wheel Hubs with Tapered Roller Bearings
Jack
Safety Chain

Order Code	Catalog Number	Description	Code	Approx. Weight(lb)	List Price
ONE ITEM FROM EACH GROUP MUST BE SPECIFIED UNLESS NOTED OTHERWISE					
BASE MACHINE					**GROUP 01**
MF3986	71436083	3986 Bi-Fold Rake, 14 Wheel		3800	20,042.00
MF3983	71436082	3983 Bi-Fold Rake, 12 Wheel		3500	16,664.00
FIELD INSTALLED KITS - (order as desired)					**GROUP 99**
	MK31238	Walking Beam Rear Wheel Kit (For use with MF3983)		175	1,149.00
	MK31250	Center Kicker Wheels Kit (Set of 2) (For use with MF3983) . . .			1,771.00
	MK31251	Center Kicker Wheels Kit (Set of 2) (For use with MF3986) . . .			1,771.00
	MK31237	3 Wheel Kicker Kit (For use with MF3983).			3,280.00
	MK31239	Side Support Gauge Wheels Kit (Set of 2) . . . . . (For use with MF3986)			1,502.00
	MK31240	Wind Panel Kit (Order one kit per wheel). . . . . (For use with MF3983 and MF3986)			98.00
	MK31241	2 Wheel Expansion Kit (For use with MF3986) . . . . . (To Convert a 14 Wheel Rake to a 16 Wheel Rake)			1,643.00

5130 HEAVY DUTY WHEEL RAKE

FOB Marshfield, Wisconsin

PRODUCT INFORMATION

Raking	
-Positions	Infinite
-Widths (ft)	Up to 30.3' (9.2m)
Windrow	
-Widths (in)	72"
-Widths (m)	(1.8m)
Frame Fold	Hydraulic
No. of Finger Wheels	17
Transport Wheels	(4) 9.5L-15SL

DIMENSIONS and WEIGHTS

Transport Width	12'25"' (3.7m)
Overall Length	28'3" (8.6 m)

TRACTOR REQUIREMENTS

Horsepower (min.)	65 HP (49 kw)
Hydraulics	One Double Acting Remote

STANDARD EQUIPMENT

36 Teeth per Wheel
60" (1.5m) Diameter Wheels with Rubber Mounted Teeth
Wheel Hubs with Tapered Roller Bearings
Heavy Duty Taper Roller Bearings on Rake Arms
Rake Wheel Wind Panels
Self-Storing Transport Lock for Rake Beam Arms
Hydraulic Lift and Fold
Electrical Controlled Independent Rake Arms
Adjustable Rake Wheel Ground Pressure
Transport and Work Lights
Safety Chain
Jack

Order Code	Catalog Number	Description	Code	Approx. Weight(lb)	List Price

ONE ITEM FROM EACH GROUP MUST BE SPECIFIED UNLESS NOTED OTHERWISE

BASE MACHINE **GROUP 01**

MF5130	700963596	5130 Heavy Duty Rake, 17 Wheel	5800		39,332.00

FIELD INSTALLED KITS - (order as desired) **GROUP 99**

	700738878	2 Wheel Front Extension Kit	4,096.00
	700738879	1 Wheel Rear Extension Kit	2,485.00

MASSEY FERGUSON®

ROTARY RAKES
PRODUCT INFORMATION

FOB Baltimore, Maryland

	RK702	RK662	RK451T	RK451	RK361
Working Width: Single Windrow 2 Windrows	20' 8" (6.3m) 23' (7.0m)	18' 10" (5.75m) 21' 10" (6.65m)	14' 9" (4.5m)	14' 9" (4.5m)	11' 10" (3.6m)
Swath Width	2' - 6' 3" (0.6-1.9m)	2' - 6' 3" (0.6-1.9m)	2'6" - 5'3" (0.76- 1.6m)	2'6" - 5'3" (0.76- 1.6m)	2' - 4' 11" (0.6- 1.5m)
Horsepower Min.	45	26	41	41	27
Transport Width (Without Tine Arms In)	7' 7"/ 9' 10" (2.3/ 3.0m)	9' 9" (2.97m)	6' 11" (2.1m)	6' 6" (1.99m)	5' 1" (2.1m)
Transport Length Transport Height (Dismounted Tine Arms)	27' 9" (8.45m) 9' 2" (2.8m)	21' 9" (6.65m) 9' 10"/ 11' 10" (3.0/3.6m)	13' 5" (4.1m) N/A	8' 10" (2.68m) N/A	7' 3" (2.21m) N/A
Hitch	Drawbar	3 pt- Cat I & II	Drawbar	3 pt- Cat I & II	3 pt- Cat I & II
Rotor Delivery	Right Side Delivery	Right Side Delivery or Center & Right Delivery	Right Side Delivery	Right Side Delivery	Right Side Delivery
Number of Rotors Tine Arms per Rotor	2 12 on each	2 10 and 12	1 12	1 12	1 10
Tractor Hydraulics	1 Single Acting 1 Double Acting	1 Single Acting	1 Single Acting	None	None
Standard Equipment:	Tandem Axle	Tandem axle 16/6.50-8		PTO shaft with Overrunning Clutch	PTO shaft with Overrunning Clutch Tandem axle 16/6.50-8
Assembly Time	6 Hours	8 Hours	1.5 Hours	1.5 Hours	1 Hour

STANDARD EQUIPMENT
Three Position Swath Curtain
Parking Stand
Safety Guards and SMV Sign
Transport Safety Chain
Electrical Lighting

Tractor Requirements:
Tractor with 540 PTO
Rollover Protective Structure (ROPS) and seat belt
Recommended to run in float position

Model Reference Chart

Old Model Number	Full Model Number (Decals & Publications)	Price Page Model
MFRK3835	RK 702 TR-SDX	MFRK702
MFRK3845	RK 662 SD-TRC	MFRK662
MFRK3814	RK 451 TR	MFRK451T
MFRK3814H	RK 451 DN	MFRK451
MFRK3802	RK 361 DN	MFRK361

PRIOR MODEL YEAR INVENTORY WILL BE CONSUMED BEFORE PRODUCTION OF NEW MODELS BEGINS.

Order Code	Catalog Number	Description	Approx. Weight(lb)	List Price
ONE ITEM FROM EACH GROUP MUST BE SPECIFIED UNLESS NOTED OTHERWISE				
BASE MACHINE				**GROUP 01**
MFRK702	700963778	RK702 Pull Type Rotary Rake with Drawbar		29,863.00
MFRK662	700963783	RK662 3-Point Rotary Rake with 3 pt- Cat I & II		27,368.00
MFRK451T	700963776	RK451T Pull Type Rotary Rake with Drawbar	1190	11,291.00
MFRK451	700963777	RK451 3-Point Rotary Rake with 3 pt- Cat I & II		14,115.00
MFRK361	700963782	RK361 3-Point Rotary Rake with 3 pt- Cat I & II		8,043.00
FIELD INSTALLED KITS - (order as desired)				**GROUP 99**
	700960862	Spare Wheel16/6.50-8 w/ support . . . . . (RK361, RK451T, RK702, RK662)		187.00
	71437768	Front Rotor Swath Former for 2 Swath Delivery (RK662)		744.00
	700963254	Spare Wheel 18/8.50-8 with support (RK702)		255.00
	700963257	Hydraulic Operation for Rear Swath Former (RK702)		507.00

ROTARY RAKES
PRODUCT INFORMATION

FOB Baltimore, Maryland

	RK1254 PRO	RK802 PRO	RK772
Working Width: Single Windrow 2 Windrows	41' (12.5m)	23' 7" (7.2m) 26' 3" (8.0m)	21' 8" (6.6m) 25' 3" (7.7m)
Swath Width	3' 11"- 7' 3" (1.2-2.0m)	3' 11"- 6' 7" (1.2 - 2.2m)	2' - 6' 3" (0.6 - 1.9m)
Horsepower Min.	80	48	41
Transport Width (Without Tine Arms In)	9' 10" (3.0m)	9' 9" (2.98m)	9' 10" (3.0m)
Transport Length	27' 11" (8.5m)	17' 7" (5.35m)	24' 5" (7.45m)
Transport Height (Dismounted Tine Arms)	12' (3.65m)	11' 10' (4.5m)	12' (3.65m)
Hitch	Drawbar	3 pt- Cat I & II	3 pt- Cat I & II
Rotor Delivery	Center Delivery	Center Delivery	Right Side Delivery or Center & Right Delivery
Number of Rotors	4	2	2
Tine Arms per Rotor	12 on each	12 on each	12 on each
Tractor Hydraulics	2 Single Acting	1 Single Acting	1 Single Acting
Standard Equipment:	Tandem Axle	Tandem axle 18/8.50-8 Wheel 11.5/80-15.3	Tandem axle 16/6.50-8 Wheel 11.5/80-15.3
Assembly Time	18 Hours	8 Hours	8 Hours

STANDARD EQUIPMENT
Three Position Swath Curtain
Transport Chassis
Parking Stand
Safety Guards and SMV Sign
Transport Safety Chain
Electrical Lighting
Tandem Axles on Rotor Chassis

Model Reference Chart

Old Model Number	Full Model Number (Decals & Publications)	Price Page Model
MFRK3891	RK 702 TR-SDX	MFRK1254P
MFRK3879P	RK 802 TRC-PRO	MFRK802P
MFRK3855	RK 772 SD-TRC	MFRK772

Tractor Requirements:
Tractor with 540 PTO
Rollover Protective Structure (ROPS) and seat belt
Recommended to run in float position

PRIOR MODEL YEAR INVENTORY WILL BE CONSUMED BEFORE PRODUCTION OF NEW MODELS BEGINS.

Order Code	Catalog Number	Description	Approx. Weight(lb)	List Price
ONE ITEM FROM EACH GROUP MUST BE SPECIFIED UNLESS NOTED OTHERWISE				
BASE MACHINE				**GROUP 01**
MFRK1254P	700963780	RK1254 Pro Mounted Rotary Rake		97,250.00
MFRK802P	700963779	RK802 Pro Mounted Rotary Rake	4409	33,060.00
MFRK772	700963781	RK772 Mounted Rotary Rake	4629	33,010.00
FIELD INSTALLED KITS - (order as desired)				**GROUP 99**
	700960862	Spare Wheel 16/6.50-8 with support (RK772, RK1254P)		187.00
	71437768	Front Rotor Swath Former for 2 Swath Delivery (RK772)		744.00
	700960866	Individual Lifting Device (RK802P)		389.00
	700960867	Spare Wheel 18/8.50-8 (RK802P)		297.00
	700963258	Electro Hydraulic Single Lift (RK1254P)		2,212.00
	700963705	Front Wheel Kit 2x16/6.50-8 (In Base for RK802P) . . . . . Optional on RK3879P		544.00

MASSEY FERGUSON®

PULL-TYPE TEDDERS

PRODUCT INFORMATION

FOB Baltimore, Maryland

	TD1310	TD1310H	TD1008H	TD1008
Tedding Width	41' 8" (12.7m)	41' 8" (12.7m)	33' 6" (10.2m)	33' 06" (10.2m)
Transport Width	9' 8" (2.94m)	9' 2" (2.78m)	9' 2" (2.78m)	9' 8" (2.94m)
Transport Length	18' 8" (5.7m)	26' 6" (8.07m)	22' 5" (6.83m)	18' 8" (5.7m)
Transport Height	8' 5" (2.56m)	N/A	N/A	8' 5" (2.56m)
Rotors	10	10	8	8
Arms / Rotors	6	6	6	6
Wheels:				
16 / 6.50-8	8	8	8	6
18 / 8.50-8	2			2
Horsepower (min. PTO)	90 HP	61 HP	48 HP	54 HP
Hitch	Drawbar	Drawbar	Drawbar	Drawbar
Transport	Transport Chassis	Hydraulic Horizontal Rear Fold	Hydraulic Horizontal Rear Fold	Transport Chassis
Hydraulic Requirements	1 Single Acting	1 Single Acting	1 Single Acting	1 Single Acting 1 Double Acting
Assembly Time	5 Hours	6.5 Hours	6 Hours	5 Hours

STANDARD EQUIPMENT

540 RPM PTO
Parking Jack (Pull Type Hitch)
Safety Chain (Pull Type Units)
SMV Sign
Drive Protection Clutch
Galvanized Tine Arms
Super C Tines
Tine Saver
Wide Angle PTO Shaft for TD776T

Tractor Requirements:
One Single Acting Hydraulic Remote
(2DAV for TD1008 and TD1665)
Tractor with 540 PTO

Model Reference Chart

Old Model Number	Full Model Number (Decals & Publications)	Price Page Model
MFTD1665	TD 1310 TRC	MFTD1310
MFTD1663	TD 1310 TR-HYDRO	MFTD1310H
MFTD1655	TD 1008 TRC	MFTD1008
MFTD1661	TD 1008 TR-HYDRO	MFTD1008H

PRIOR MODEL YEAR INVENTORY WILL BE CONSUMED BEFORE PRODUCTION OF NEW MODELS BEGINS.

Order Code	Catalog Number	Description	Approx. Weight(lb)	List Price

ONE ITEM FROM EACH GROUP MUST BE SPECIFIED UNLESS NOTED OTHERWISE

MFTD1310	700963774	10 Rotor, 41' (12.7m), Drawbar, Transport Chassis Tedder.	36,376.00
MFTD1310H	700963775	10 Rotor, 41' (12.7m), Drawbar, Hydraulic Horizontal Rear Fold Tedder .	35,864.00
MFTD1008	700963773	8 Rotor, 33' (10.2m), Drawbar, Transport Chassis Tedder.	30,795.00
MFTD1008H	700963772	8 Rotor, 33' (10.2m), Drawbar, Hydraulic Horizontal Rear Fold Tedder . .	27,831.00

FACTORY INSTALLED **GROUP 02**

700960862	Spare Wheel 16/6.50-8 with support	187.00
700960865	Electromagnetic 2/2 Valve-to operate machine with only 1-DAV	714.00

PULL-TYPE TEDDERS

PRODUCT INFORMATION

FOB Baltimore, Maryland

	TD776	TD776T	TD676	TD524T	TD524	TD252
Tedding Width	25' 3" (7.7m)	25' 3" (7.7m)	21' 8" (6.6m)	17' 1" (5.2m)	17' 1" (5.2m)	8' 2" (2.5m)
Transport Width	9' 10" (3.0m)	9' 10" (3.0m)	9' 6" (2.9m)	9' 10" (3.0m)	9' 10" (3.0m)	9' 10" (3.0m)
Transport Length	8' (2.45m)	14' 8" (4.48m)	6' 11" (2.1m)	10' 2" (3.1m)	7' 5" (2.25m)	10' 2" (3.1m)
Transport Height	12' (3.65m)	9' 6" (2.9m)	10' 10" (3.3m)	8' 6" (2.6m)	8' 6" (2.6m)	N/A
Rotors	6	6	6	4	4	2
Arms / Rotors	6	6	6	6	6	6
Wheels:						
16 / 6.50-6						2
16 / 6.50-8	6	4	6	4	4	
18 / 8.50-8		2				
Horsepower (min. PTO)	82 HP	41 HP	41 HP	30 HP	30 HP	20 HP
Hitch	3 pt- Cat I & II	Drawbar	3 pt- Cat I & II	Drawbar	3 pt- Cat I & II	Drawbar
Transport	Vertical Fold	Transport Chassis	Hydraulic Vertical Fold	Hydraulic Vertical Fold	Hydraulic Vertical Fold	None
Hydraulic Requirements	1 Single Acting	1 Single Acting	1 Single Acting	1 Single Acting	1 Single Acting	None
Assembly Time	4 Hours	4 Hours	3 Hours	2.5 Hours	2.5 Hours	2.5 Hours

STANDARD EQUIPMENT

540 RPM PTO
Parking Jack (Pull Type Hitch)
Safety Chain (Pull Type Units)
SMV Sign
Drive Protection Clutch
Galvanized Tine Arms
Super C Tines
Tine Saver
Wide Angle PTO Shaft for TD776T

Tractor Requirements:
One Single Acting Hydraulic Remote Tractor with 540 PTO

Model Reference Chart

Old Model Number	Full Model Number (Decals & Publications)	Price Page Model
MFTD1638	TD 776 DN	MFTD776
MFTD1648	TD 776 TRC	MFTD776T
MFTD1636	TD 676 DN	MFTD676
MFTD1635	TD 524 TR- HYDRO	MFTD524T
MFTD1635H	TD 524 DN	MFTD524
MFTD1620	TD 252 TR	MFTD252

PRIOR MODEL YEAR INVENTORY WILL BE CONSUMED BEFORE PRODUCTION OF NEW MODELS BEGINS.

Order Code	Catalog Number	Description	Approx. Weight(lb)	List Price

ONE ITEM FROM EACH GROUP MUST BE SPECIFIED UNLESS NOTED OTHERWISE

Note: TD252 must be ordered and shipped in multiples of 2.

BASE MACHINE — **GROUP 01**

MFTD776	700963770	6 Rotor, 25' (7.7m), 3 pt-Cat I&II, Hydraulic Vertical Fold Tedder		18,704.00
MFTD776T	700963771	6 Rotor, 25' (7.7m), Drawbar, Transport Chassis Tedder.		20,564.00
MFTD676	700963769	6 Rotor, 21' (6.6m), 3 pt-Cat I&II, Hydraulic Vertical Fold Tedder		16,893.00
MFTD524T	700963690	4 Rotor, 17' (5.2m), Drawbar, Hydraulic Vertical Fold, Tedder	1223	9,920.00
MFTD524	700963768	4 Rotor, 17' (5.2m), 3 pt-Cat I&II, Hydraulic Vertical Fold Tedder		9,920.00
MFTD252	700963767	2 Rotor, 8' (2.5m), Drawbar, Tedder	513	3,536.00

FACTORY INSTALLED — **GROUP 02**

	700960862	Spare Wheel 16/6.50-8 with support (TD524, TD676, TD776)	187.00
	700960862	Spare Wheel 16/6.50-8 with support (TD1635, TD1636, TD1638).	185.00

ROUND BALERS

ROUND BALERS
PRODUCT INFORMATION

PREMIUM SERIES

	2956A/2956	2946A/2946
Bale Size Width	61.5" (1.6m)	46.5" (.4m)
Diameter - min.	30" (.8m)	30" (.8m)
Diameter - max.	72" (1.8m)	72" (1.8m)
Max. Weight (lbs.)	2200	1700 Dry Hay 2000 Silage
Max. Volume (cu ft)	145	110
Pick-up Width - Tine to Tine (in)	80.6" (2m)	65" (1.7m)
Mesh Wrap Option	YES	YES
Tires	21.5L x 16.1	21.5L x 16.1

TRACTOR REQUIREMENTS

Horsepower (minimum)	70	65
PTO (RPM)	540 or 1000	540 or 1000
Recommend PTO HP	90 HP	80 HP

ECONOMY SERIES

	1745	1734
Bale Size Width	46.5" (1.2m)	39" (1m)
Diameter - min.	30" (.8m)	30" (.8m)
Diameter - max.	62" (1.6m)	52" (1.3m)
Max. Weight (lbs.)	1250lbs	550lbs
Pick-up Width - Tine to Tine	44	34
Mesh Option	YES	NO
Tires	31 x 13.5 - 15	7.60 x 15
Optional	14L - 16.1	

TRACTOR REQUIREMENTS

Horsepower (minimum)	40	30
PTO (RPM)	540	540

NOTE: This is a general sales guide; for further product details and official specifications refer to product information guides and product literature.

HESSTON by MASSEY FERGUSON

2956A ROUND BALER

FOB Hesston, KS

STANDARD EQUIPMENT

On-Board Hydraulic System
61.5" (1.6m) Wide x 72" (1.8m) Diameter Bale
80.6" (2m) Wide Pickup Assembly - Dual CamTrack Tine Control
Pickup Wind Guard
Slip Clutch with Hydraulic Declutcher
Bale Counter
Bale Size Indicator
"Bale Full" Audio and Visual Alert
3 Bar Color Coded Bale Shape Indicator
Direct Feed, Rotor, Open Throat Chamber
540/1000 RPM PTO Drive
Hydraulic Pickup Lift
Extra Mesh Roll Storage
Over the Edge Mesh Wrap Capabilities
Twine Tie and Mesh Wrap
QCS - Quad Cylinder Bale Density System
21.5L-16.1 Tires with Suspension Axle
Automatic Tying when Preset Bale Size is reached with Manual Override
Dual Tube Twine Arm
Staggered Belt Clean Out
Wedge Grip Belts with Alligator Lacings
Electrically Activated Twine and Mesh Wrap Systems
Safety Chain
Warning Light (Flashing)

Tractor Requirements
70 PTO HP (minimum)
One Double Acting Remote Valve
Bale Control Monitor required to Operate Baler
See Group 98

Order Code	Catalog Number	Description	Approx. Weight(lb)	List Price

ONE ITEM FROM EACH GROUP MUST BE SPECIFIED

BASE MACHINE — GROUP 01

MF2956A	700960969YH	2956A Round Baler	56,883.00

DRIVELINE — GROUP 03

LA47	700955626	540 RPM PTO	**In Base**
LA50	700955627	1000 RPM PTO	No Charge

BALE EJECTION — GROUP 04

B603	700956241	Hydraulic Kicker	No Charge
B602	700955603	Less Kicker (requires 700959586M -Bale Ramp Kit)	(2,572.00)

TWINE TIE / MESH WRAP — GROUP 05

B103	Standard*	Twine and Mesh Included In Base	**In Base**
B101	700955628	Twine Tie (Less Mesh)	(5,408.00)
B102	700955604*	Mesh Wrap (Less Twine Tie)	(2,217.00)

*Requires B603, 700956241 Kicker or 700959586M - Bale Ramp Kit

WINDGUARD — GROUP 06

HR04	700963270	Standard Windguard	**In Base**
HR03	700963272	Solid Windguard with Roller Attachment	455.00

BALE CONTROL MONITOR - FIELD INSTALLED — GROUP 98

Includes harness, power adapter and hardware to mount Console inside the tractor cab.
Required for tractors not equipped with ISO 11783 plug and Console.

	700957986M	C1000 Monitor	3,032.00

For Information on AGCO Hay Preservative and Applicators For Balers, See Pages 83 & 84.

2956A ROUND BALER

Order Code	Catalog Number	Description	Approx. Weight(lb)	List Price
FIELD INSTALLED KITS- (order as desired)				**GROUP 99**
	MK51249	Harness, Switched Power (To Hook Console Directly to Battery)		187.00
	MK50556	Fire Extinguisher Kit	17	554.00
	MK51018	Remote Start Switch		103.00
	700958057M	Silage Kit		1,187.00
	700957930M	Bale Kicker Kit		2,649.00
	700958062M	Twine Tie Addition Kit		2,217.00
	700959492M	Mesh Wrap		5,818.00
	700958130M	Soft Core Bale Kit		118.00
	700958020M	Light Kit		122.00
	700959586M	Bale Ramp Kit		788.00
	700958018M	Short Crop Kit		372.00
	700961569M*	Solid Windguard Kit		507.00
	700961571M	Roller Windguard Kit. (For use only with Solid Windguard)		377.00
	71428520M	Ship Safe Preservative Coating (Factory Applied) (Recommended for shipments occurring in November through March 31ST)		604.00

*Note: Updated Solid Windguard Kit to Allow Roller Attachment

ORDER FROM PARTS

	700741518	French Operators Manual and Decal Kit.	2	No Charge
	700741520	Spanish Operators Manual and Decal Kit.	2	No Charge

Note: To Convert from 540 PTO to 1000 PTO order 1-3/8” 21 Spline Yoke (700 733 694) or 1-3/4” 20 Spline Yoke (700 733 702) from Parts.

HESSTON by MASSEY FERGUSON

2956 ROUND BALER

FOB Hesston, KS

STANDARD EQUIPMENT

61.5" (1.6m) Wide x 72" (1.8m) Diameter Bale
80.6" (2m) Wide Pickup Assembly - Dual CamTrack Tine Control
Pickup Wind Guard
Slip Clutch with Hydraulic Declutcher
Bale Counter
Bale Size Indicator
"Bale Full" Audio and Visual Alert
3 Bar Color Coded Bale Shape Indicator
Direct Feed, Rotor, Open Throat Chamber
540/1000 RPM PTO Drive
Hydraulic Pickup Lift
Extra Mesh Roll Storage
Over the Edge Mesh Wrap Capabilities
Twine Tie and Mesh Wrap
QCS - Quad Cylinder Bale Density System
21.5L-16.1 Tires with Suspension Axle
Automatic Tying when Preset Bale Size is reached with Manual Override
Dual Tube Twine Arm
Staggered Belt Clean Out
Wedge Grip Belts with Alligator Lacings
Electrically Activated Twine and Mesh Wrap Systems
Safety Chain
Warning Light (Flashing)

Tractor Requirements
70 PTO HP (minimum)
Two Double Acting Remote Valves
Bale Control Monitor required to Operate Baler
See Group 98

Order Code	Catalog Number	Description	Approx. Weight(lb)	List Price

ONE ITEM FROM EACH GROUP MUST BE SPECIFIED

BASE MACHINE — GROUP 01

MF2956	700960968YH	2956 Round Baler	50,174.00

DRIVELINE — GROUP 03

LA47	700955626	540 RPM PTO	**In Base**
LA50	700955627	1000 RPM PTO	No Charge

BALE EJECTION — GROUP 04

B602	700955603	Less Kicker	No Charge
B601	700955602	Kicker	2,649.00

TWINE TIE / MESH WRAP — GROUP 05

B103	Standard*	Twine and Mesh Included In Base	**In Base**
B101	700955628	Twine Tie (Less Mesh)	(5,408.00)
B102	700955604*	Mesh Wrap (Less Twine Tie)	(2,217.00)

*Requires B601, 700955602 Kicker or 700959586M - Bale Ramp Kit

WINDGUARD — GROUP 06

HR04	700963270	Standard Windguard	**In Base**
HR03	700963272	Solid Windguard with Roller Attachment	455.00

BALE CONTROL MONITOR - FIELD INSTALLED — GROUP 98

Includes harness, power adapter and hardware to mount Console inside the tractor cab.
Required for tractors not equipped with ISO 11783 plug and Console.

	700957986M	C1000 Monitor	3,032.00

For Information on AGCO Hay Preservative and Applicators For Balers, See Pages 83 & 84.

2956 ROUND BALER

Order Code	Catalog Number	Description	Approx. Weight(lb)	List Price
FIELD INSTALLED KITS- (order as desired)				**GROUP 99**
	MK51249	Harness, Switched Power (To Hook Console Directly to Battery)		187.00
	MK50556	Fire Extinguisher Kit	17	554.00
	MK51018	Remote Start Switch		103.00
	700957930M	Bale Kicker Kit		2,649.00
	700958057M	Silage Kit		1,187.00
	700958062M	Twine Tie Addition Kit		2,217.00
	700959492M	Mesh Wrap		5,818.00
	700958129M	Soft Core Bale Kit		223.00
	700958020M	Light Kit		122.00
	700959586M	Bale Ramp Kit		788.00
	700958018M	Short Crop Kit		372.00
	700961569M*	Solid Windguard Kit		507.00
	700961571M	Roller Windguard Kit. (For use only with Solid Windguard)		377.00
	71428520M	Ship Safe Preservative Coating (Factory Applied) (Recommended for shipments occurring in November through March 31ST)		604.00

*Note: Updated Solid Windguard Kit to Allow Roller Attachment

ORDER FROM PARTS

	700741518	French Operators Manual and Decal Kit.	2	No Charge
	700741520	Spanish Operators Manual and Decal Kit.	2	No Charge

Note: To Convert from 540 PTO to 1000 PTO order 1-3/8” 21 Spline Yoke (700 733 694) or 1-3/4” 20 Spline Yoke (700 733 702) from Parts.

HESSTON by MASSEY FERGUSON

2946A ROUND BALER

FOB Hesston, KS

STANDARD EQUIPMENT

On-Board Hydraulic System
46.5" (1.2m) Wide x 72" (1.8m) Diameter Bale
65" (1.7m) Wide Pickup Assembly - Dual CamTrack Tine Control
Pickup Wind Guard
Slip Clutch with Hydraulic Declutcher
Bale Counter
Bale Size Indicator
"Bale Full" Audio and Visual Alert
3 Bar Color Coded Bale Shape Indicator
Direct Feed, Rotor, Open Throat Chamber
540/1000 RPM PTO Drive
Hydraulic Pickup Lift
Extra Mesh Roll Storage
Over the Edge Mesh Wrap Capabilities
Twine Tie and Mesh Wrap
QCS - Quad Cylinder Bale Density System
21.5L-16.1 Tires with Suspension Axle
Automatic Tying when Preset Bale Size is reached with Manual Override
Dual Tube Twine Arm
Staggered Belt Clean Out
Wedge Grip Belts with Alligator Lacings
Electrically Activated Twine and Mesh Wrap Systems
Safety Chain
Warning Light (Flashing)

Tractor Requirements
70 PTO HP (minimum)
One Double Acting Remote Valve
Bale Control Monitor required to Operate Baler
See Group 98

Order Code	Catalog Number	Description	Approx. Weight(lb)	List Price

ONE ITEM FROM EACH GROUP MUST BE SPECIFIED

BASE MACHINE — GROUP 01

MF2946A~M205	700961479YH	2946A Round Baler	49,244.00
MF2946A~M201	700961481YH	2946A Round Baler with Silage	51,035.00

DRIVELINE — GROUP 03

LA47	700955626	540 RPM PTO	**In Base**
LA50	700955627	1000 RPM PTO	No Charge

BALE EJECTION — GROUP 04

B603	700956240	Hydraulic Kicker	No Charge
B602	700955603	Less Kicker (requires 700959586M- Bale Ramp Kit)	(2,572.00)

TWINE / MESH WRAP — GROUP 05

B103	Standard*	Twine and Mesh Included In Base	**In Base**
B101	700955628	Twine Tie (Less Mesh)	(5,408.00)
B102	700956140*	Mesh Wrap (Less Twine Tie)	(2,217.00)

*Requires B603, 700956241 Kicker or 700959586M - Bale Ramp Kit

WINDGUARD — GROUP 06

HR04	700963271	Standard Windguard	**In Base**
HR03	700963273	Solid Windguard with Roller Attachment	455.00

BALE CONTROL MONITOR - FIELD INSTALLED — GROUP 98

Includes harness, power adapter and hardware to mount Console inside the tractor cab.
Required for tractors not equipped with ISO 11783 plug and Console.

	700957986M	C1000 Monitor	3,032.00

For Information on AGCO Hay Preservative and Applicators For Balers, See Pages 83 & 84.

2946A ROUND BALER

Order Code	Catalog Number	Description	Approx. Weight(lb)	List Price
FIELD INSTALLED KITS- (order as desired)				**GROUP 99**
	MK51249	Harness, Switched Power (To Hook Console Directly to Battery)		187.00
	MK50556	Fire Extinguisher Kit	17	554.00
	MK51018	Remote Start Switch		103.00
	700957930M	Bale Kicker Kit		2,649.00
	700958056M	Silage Kit		1,082.00
	700958062M	Twine Tie Addition Kit		2,217.00
	700959490M	Mesh Wrap		5,818.00
	700958130M	Soft Core Bale Kit		118.00
	700958016M	Short Crop Kit		286.00
	700958020M	Light Kit		122.00
	700959586M	Bale Ramp Kit.		788.00
	700961568M*	Solid Windguard Kit		507.00
	700961570M	Roller Windguard Kit. (For use only with Solid Windguard)		377.00
	71428520M	Ship Safe Preservative Coating (Factory Applied) (Recommended for shipments occurring in November through March 31ST)		604.00

*Note: Updated Solid Windguard Kit to Allow Roller Attachment

ORDER FROM PARTS

	700741518	French Operators Manual and Decal Kit.	2	No Charge
	700741520	Spanish Operators Manual and Decal Kit.	2	No Charge

Note: To Convert from 540 PTO to 1000 PTO order 1-3/8” 21 Spline Yoke (700 733 694) or 1-3/4” 20 Spline Yoke (700 733 702) from Parts.

HESSTON by MASSEY FERGUSON

2946 ROUND BALER

FOB Hesston, KS

STANDARD EQUIPMENT

46.5" (1.2m) Wide x 72" (1.8m) Diameter Bale
65" (1.7m) Wide Pickup Assembly - Dual CamTrack Tine Control
Pickup Wind Guard
Slip Clutch with Hydraulic Declutcher
Bale Counter
Bale Size Indicator
"Bale Full" Audio and Visual Alert
3 Bar Color Coded Bale Shape Indicator
Direct Feed, Rotor, Open Throat Chamber
540/1000 RPM PTO Drive
Hydraulic Pickup Lift
Extra Mesh Roll Storage
Over the Edge Mesh Wrap Capabilities
Twine Tie and Mesh Wrap
QCS - Quad Cylinder Bale Density System
21.5L-16.1 Tires with Suspension Axle
Automatic Tying when Preset Bale Size is reached with Manual Override
Dual Tube Twine Arm
Staggered Belt Clean Out
Wedge Grip Belts with Alligator Lacings
Electrically Activated Twine and Mesh Wrap Systems
Safety Chain
Warning Light (Flashing)

Tractor Requirements
70 PTO HP (minimum)
Two Double Acting Remote Valves
Bale Control Monitor required to Operate Baler
See Group 98

Order Code	Catalog Number	Description	Approx. Weight(lb)	List Price

ONE ITEM FROM EACH GROUP MUST BE SPECIFIED

BASE MACHINE — GROUP 01

MF2946~M205	700961475YH	2946 Round Baler	43,100.00
MF2946~M201	700961477YH	2946 Round Baler with Silage	44,874.00

DRIVELINE — GROUP 03

LA47	700955626	540 RPM PTO	**In Base**
LA50	700955627	1000 RPM PTO	No Charge

BALE EJECTION — GROUP 04

B602	700955603	Less Kicker	No Charge
B601	700956153	Kicker	2,649.00

TWINE / MESH WRAP — GROUP 05

B103	Standard*	Twine and Mesh Included In Base	**In Base**
B101	700955628	Twine Tie (Less Mesh)	(5,408.00)
B102	700956140*	Mesh Wrap (Less Twine Tie)	(2,217.00)

*Requires B601, 700956153 Kicker or 700959586M - Bale Ramp Kit

WINDGUARD — GROUP 06

HR04	700963271	Standard Windguard	**In Base**
HR03	700963273	Solid Windguard with Roller Attachment	455.00

BALE CONTROL MONITOR - FIELD INSTALLED — GROUP 98

Includes harness, power adapter and hardware to mount Console inside the tractor cab.
Required for tractors not equipped with ISO 11783 plug and Console.

	700957986M	C1000 Monitor	3,032.00

For Information on AGCO Hay Preservative and Applicators For Balers, See Pages 83 & 84.

2946 ROUND BALER

Order Code	Catalog Number	Description	Approx. Weight(lb)	List Price
FIELD INSTALLED KITS- (order as desired)				**GROUP 99**
	MK51249	Harness, Switched Power (To Hook Console Directly to Battery)		187.00
	MK50556	Fire Extinguisher Kit	17	554.00
	MK51018	Remote Start Switch		103.00
	700957930M	Bale Kicker Kit		2,649.00
	700958056M	Silage Kit		1,082.00
	700958062M	Twine Tie Addition Kit		2,217.00
	700959490M	Mesh Wrap		5,818.00
	700958129M	Soft Core Bale Kit		223.00
	700958020M	Light Kit		122.00
	700958016M	Short Crop Kit		286.00
	700959586M	Bale Ramp Kit.		788.00
	700961568M*	Solid Windguard Kit		507.00
	700961570M	Roller Windguard Kit. (For use only with Solid Windguard)		377.00
	71428520M	Ship Safe Preservative Coating (Factory Applied) (Recommended for shipments occurring in November through March 31ST)		604.00

*Note: Updated Solid Windguard Kit to Allow Roller Attachment

ORDER FROM PARTS

	700741518	French Operators Manual and Decal Kit.	2	No Charge
	700741520	Spanish Operators Manual and Decal Kit.	2	No Charge

Note: To Convert from 540 PTO to 1000 PTO order 1-3/8” 21 Spline Yoke (700 733 694) or 1-3/4” 20 Spline Yoke (700 733 702) from Parts.

HESSTON by MASSEY FERGUSON

1745 ROUND BALER

FOB Hesston, KS

STANDARD EQUIPMENT

Direct Feed, Open Throat Chamber
46.5" (1.2m) Wide Bale
62" (1.6m) Diameter Bale
44.17" (1.1m) Wide Pickup
2.6" (.1m) Spacing between Tines
Six Wedge Grip Belts, 6.9" Wide
Manual Lift on Pickup
Electric Twine Threader
Dual Tube Twine Arm
Automatic Twine Cutoff
Twine Capacity - 4 Balls of Twine
Pickup Windguard
540 RPM PTO Drive
"Sure-Trac" Crowned Drive Roll
31-13.5 x 15 Standard or
14L x 16.1 Optional Tires
Bale Size Indicator
Transport Light (Flashing)
Safety Chain
Bale Full Alert and Tailgate Latch Indicator

Tractor Requirements

40 PTO HP (minimum)
One Double Acting Remote Vale

Order Code	Catalog Number	Description	Approx. Weight(lb)	List Price
ONE ITEM FROM EACH GROUP MUST BE SPECIFIED UNLESS NOTED OTHERWISE				
BASE MACHINE				**GROUP 01**
MF1745	700960234YH	1745 Round Baler		24,612.00
TIRES				**GROUP 02**
B106	700956009	31 x 13.5-15		**In Base**
B105	700956010	14L x 16.1		457.00
CONTROLLER				**GROUP 03**
B304	700957443	Deluxe Auto Tie Controller (Twine and Mesh)		**In Base**
B302	700957441	Manual Controller (Twine Only)✶		(1,451.00)
✶Manual Controller Balers cannot be upgraded to Mesh Controller				
MESH WRAP				**GROUP 04**
B101	700957444	Less Mesh Wrap (Twine Only)		**In Base**
B102	700957445	Mesh Wrap (Twine and Mesh)⊙		4,824.00
BALE EJECTION				**GROUP 05**
		Less Kicker		**In Base**
B601	700957448	Kicker⊙		2,649.00
FIELD INSTALLED KITS - (order as desired)				**GROUP 99**
	MKD50556	Fire Extinguisher Kit	17	554.00
	MK51266	Gathering Wheels Kit	217	1,276.00
	MK51270	Bale Ramp Kit (2008 and Newer)	66	597.00
	MKD51092	Bale Counter Kit	5	76.00
	MKD51159	Starting Roll Scraper		148.00
	700957454M	Hydraulic Kicker Kit⊙		2,260.00
	700959483M	Mesh Wrap⊙		5,066.00
	700957455M	Bale Shape Kit⊙		483.00
	71428520M	Ship Safe Preservative Coating (Factory Applied) (Recommended for shipments occurring in November through March 31ST)		604.00
ORDER FROM PARTS				
	700724299	Optional Adjustable Density Valve		ORDER FROM PARTS
	700735402	French Operators Manual and Decal Kit	2	No Charge
	700735405	Spanish Operators Manual and Decal Kit	2	No Charge

⊙Requires Deluxe Autotie Controller (Twine and Mesh)

For Information on AGCO Hay Preservative and Applicators For Balers, See Pages 83 & 84.

1734 ROUND BALER

FOB Hesston, KS

STANDARD EQUIPMENT

Direct Feed, Open Throat Chamber
39" (1m) Wide Bale
52" (1.3m) Diameter Bale
34" (.9m) (Tine to Tine) Wide Pickup
2.6" (.1m) Spacing between Tines
Five Minirough Belts, 4.8" (.1m) Wide
Manual Lift on Pickup
Rope Activated Manual Twine Threader
Dual Tube Twine Arm
Automatic Twine Cutoff
Twine Capacity - 2 Balls of Twine
Removable Pickup Windguard
540 RPM PTO Drive
"Sure-Trac" Crowned Drive Roll
7.60 x 15 6 ply Tires
Bale Size Indicator
Mechanical "Bale Full" Alert
Bale Counter
Safety Chain
Transport Light (Flashing)

Tractor Requirements
30 PTO HP (minimum)
One Double Acting Remote Valve

Order Code	Catalog Number	Description	Approx. Weight(lb)	List Price
ONE ITEM FROM EACH GROUP MUST BE SPECIFIED UNLESS NOTED OTHERWISE				
BASE MACHINE				**GROUP 01**
MF1734	700960232YH	1734 Round Baler	2780	18,664.00
FIELD INSTALLED KITS - (order as desired)				**GROUP 99**
	MKD50641	Bale Ramp Kit	55	458.00
	MKD51156	Gathering Wheels Kit	178	1,296.00
	MKD51065	Electric Threader Kit	20	948.00
	MKD50556	Fire Extinguisher Kit	17	554.00
	71428520M	Ship Safe Preservative Coating (Factory Applied) (Recommended for shipments occurring in November through March 31ST)		604.00
ORDER FROM PARTS				
	700728890	Spanish Operators Manual and Decal Kit	2	No Charge
	700728891	French Operators Manual and Decal Kit	2	No Charge

For Information on AGCO Hay Preservative and Applicators For Balers, See Pages 83 & 84.

HESSTON
by MASSEY FERGUSON

SMALL / MEDIUM SQUARE BALERS

SMALL / MEDIUM RECTANGULAR BALERS

FOB Hesston, KS

PRODUCT INFORMATION

	1844S/1844N	1842	1840	1838	1836
BALE SIZE					
Height	15" (.4m)	16" (.4m)	14" (.4m)	14" (.4m)	14" (.4m)
Width	22" (.6m)	18" (.5m)	18" (.5m)	18" (.5m)	18" (.5m)
Length	12"-52" (.3m to 1.3m)	12"-52" (.3m to 1.3m)	12"-52" (.3m to 1.3m)	12"-52" (.3m to 1.3m)	12"-52" (.3m to 1.3m)
PICK-UP					
Width - Tine to Tine	70" (1.8m)	70" (1.8m)	70" (1.8m)	70" (1.8m)	55" (1.4m)
No. of Tine Bars	4	4	4	3	3
No. of Double Tines	56	56	56	42	33
TIRES	14Lx16.1	31x13.5-15	31x13.5-15	11Lx14	9.5Lx14
TRACTOR REQUIREMENTS					
Horsepower	75	50	50	45	45
PTO	1000	540	540	540	540

NOTE: This is a general sales guide; for further product details and official specifications refer to product information guides and product literature.

HESSTON by MASSEY FERGUSON

1844 MEDIUM RECTANGULAR BALER

FOB Hesston, KS

STANDARD EQUIPMENT

1844S MEDIUM RECTANGULAR BALER

Three Twine Baler - PTO Powered
Hydraulic Density Control Top, Bottom and Side Rails
Bale Weight up to 180 lbs.
91.2" (2.3m) Pickup (Outside Panel to Panel)
with 4 Bars and 56 Double Tines
Twine Boxes - 12 Ball Capacity
Twine Requirements - Heavy Duty Plastic or Sisal
1000 RPM Double Reduction Hypoid Gearbox
Two Gauge Wheels
6 Stuffer Tines
Plunger Speed 90 Strokes per Minute
Plunger Stroke 21.9" Long
14L x 16.1, 12 ply Flotation Tires
Bale Formation Kit
Bale Size:
Height - 15" (.4m)
Width - 22" (.6m)
Length - Adjustable 12" to 52" (.3m to 1.3m)
Lights for Night Operation
2-5/16" Ball Hitch
Knottter Lube System

Tractor Requirements: 80 PTO HP

1844N MEDIUM RECTANGULAR BALER

Three Twine Baler- PTO Powered
Hydraulic Density Control Top, Bottom and Side Rails
Bale Weight up to 180 lbs.
91.2" (2.3m) Pickup (Outside Panel to Panel)
with 4 Bars and 56 Double Tines
Twine Boxes - 12 Ball Capacity
Twine Requirements - Heavy Duty Plastic or Sisal
1000 RPM Double Reduction Hypoid Gearbox
Two Gauge Wheels
8 Stuffer Tines
Plunger Speed 90 Strokes per Minute
Plunger Stroke 21.9" Long
14L x 16.1, 12 ply Flotation Tires
Bale Size:
Height - 16" (.4m)
Width - 22" (.6m)
Length - Adjustable 12" to 52" (.3m to 1.3m)
Lights for Night Operation
2-5/16" Ball Hitch
Knottter Lube System

Tractor Requirements: 80 PTO HP

Order Code	Catalog Number	Description	Approx. Weight(lb)	List Price
ONE ITEM FROM EACH BOX MUST BE SPECIFIED UNLESS NOTED OTHERWISE				
BASE MACHINE				**GROUP 01**
MF1844S	700960222YH	1844S Three-Twine Medium Rectangular PTO Baler		77,866.00
MF1844N	700960223YH	1844N Three-Twine Medium Rectangular PTO Baler		77,866.00
FIELD INSTALLED KITS - (order as desired)				**GROUP 99**
	MK41222	Tandem Wheel Kit, 12.5L - 15	500	2,321.00
	700963265M	Clevis Hitch Kit.		265.00
	71428520M	Ship Safe Preservative Coating (Factory Applied). . . . . (Recommended for shipments occurring in November through March 31ST)		604.00
ORDER FROM PARTS				
	700736613	French Operators Manual	2	No Charge
	700736614	Spanish Operators Manual	2	No Charge

For Information on AGCO Hay Preservative and Applicators For Balers, See Pages 83 & 84.

1842 MEDIUM RECTANGULAR BALER

FOB Hesston, KS

STANDARD EQUIPMENT

16" x 18" (.4m x .5m) Bale Chamber
Equal Angle Hitch with 4-Joint Driveline and Overrunning Clutch
Heavy Duty Hypoid Gearbox
91.2" (2.3m) Pickup (outside Panel to Panel) with 4 Bars and 56 Double Tines
Two Pickup Gauge Wheels
Brackets to accommodate ASAE Standard Bale Counter
Safety Chain
Parking Jack
31 x 13.5-15, 8 Ply Flotation Tires
Knotter Blower
Hydraulic Pick-up Lift
Adjustable Bale Length 12" to 52" (.3m to 1.3m)
100 Strokes per minute Plunger Mounted on 8 Ball Bearing Rollers
Twine Knotters
Center-Line Feed System
Hydraulic Bale Density Control
Twine Storage Box - 10 Ball Capacity

Tractor Requirements
50 PTO HP (minimum)
540 RPM PTO
Double Acting Remote Valve

Order Code	Catalog Number	Description	Approx. Weight(lb)	List Price

ONE ITEM FROM EACH GROUP MUST BE SPECIFIED UNLESS NOTED OTHERWISE

BASE MACHINE **GROUP 01**

MF1842	700961578YH	1842 Twine Tie Baler	4375	37,400.00

FIELD INSTALLED KITS - (order as desired) **GROUP 99**

	MKD40416	Bale Chute Kit	28	160.00
	MKD40417	Bale Chute Extension Kit (For use with MKD40416, Bale Chute)	47	181.00
	MKD50391	Bale Chute Quarter Turn Kit	78	485.00
	MKD40291	Field Light Kit	7	265.00
	MKD40582	Knotter Lubrication System Kit.	9	1,451.00
	71428520M	Ship Safe Preservative Coating (Factory Applied) (Recommended for shipments occurring in November through March 31ST)		604.00

ORDER FROM PARTS

	700729992	French Operators Manual and Decal Kit	2	No Charge
	700729993	Spanish Operators Manual and Decal Kit	2	No Charge

For Information on AGCO Hay Preservative and Applicators For Balers, See Pages 83 & 84.

HESSTON by MASSEY FERGUSON

1840 SMALL RECTANGULAR BALER

FOB Hesston, KS

STANDARD EQUIPMENT

14" x 18" (.4m x .5m) Bale Chamber
U-Joint - Constant Velocity 3-Joint Driveline and Overrunning Clutch
Hypoid Gearbox with Tapered Roller Bearings
89.13" (2.3) Pickup (outside Panel to Panel) with 4 Bars and 56 Double Tines
Two Pickup Gauge Wheels
Equal Weight Distribution on both Wheels
Manual Pickup Lift
Safety Chain
Parking Jack
31 x 13.5 - 15, 8P Tires
Adjustable Bale Length 12" to 52" (.3m to 1.3m)
100 Strokes per minute Plunger mounted on 8 Sealed Ball Bearing Rollers
Center Line Feed System
Extension Spring Bale Tensioning
Twine Storage Box - 10 Ball Capacity
Bale Counter
Adjustable Drawbar

Tractor Requirements

50 PTO HP (minimum)
540 RPM PTO

Order Code	Catalog Number	Description	Approx. Weight(lb)	List Price

ONE ITEM FROM EACH GROUP MUST BE SPECIFIED UNLESS NOTED OTHERWISE

BASE MACHINE — GROUP 01

MF1840-Q201	700961794YH	1840 Small Rectangular Baler- Twine		28,911.00

UPGRADE PACKAGE — GROUP 02

	MKT0334	Standard Mechanical Package Includes:		**In Base**
Q301		Mechanical Tensioner		
Q601		Less Knotter Blower		
	MKT0335	High Performance Package Includes:		1,760.00
Q302		Hydraulic Tensioner		
Q602		Knotter Blower		

PICK-UP LIFT - Optional — GROUP 03

PU01	700963279	Hydraulic Pick-up Lift Requires One Double Acting Remote Valve		399.00

FIELD INSTALLED KITS - (order as desired) — GROUP 99

	MKD40416	Bale Chute Kit	28	160.00
	MKD40417	Bale Chute Extension Kit (For use with MKD40416, Bale Chute)	47	181.00
	MKD50391	Bale Chute Quarter Turn Kit	78	485.00
	700963602M	Knotter Blower Kit Requires Harness Kit 700963604M		417.00
	700963604M	Knotter / Blower Field Light Harness		TBA
	700962517M	Hydraulic Bale Tension Kit	66	1,565.00
	MKD40555	Hydraulic Pickup Lift Kit (Requires one Double Acting Remote Valve)	10	430.00
	700961890M	Wagon Hitch Kit		914.00
	MKD40445	Field Light Kit	10	267.00
	700959756M	Bale Thrower Kit with Electronic Speed Control (Order Separately)	510	8,110.00
	71428520M	Ship Safe Preservative Coating (Factory Applied) (Recommended for shipments occurring in November through March 31)		604.00

ORDER FROM PARTS

	700741546	French Operators Manual and Decal Kit	2	No Charge
	700741548	Spanish Operators Manual and Decal Kit	2	No Charge

For Information on AGCO Hay Preservative and Applicators For Balers, See Pages 83 & 84.

1838 SMALL RECTANGULAR BALER

FOB Hesston, KS

STANDARD EQUIPMENT

14" x 18" (.4m x .5m) Bale Chamber
U-Joint - Constant Velocity 3-Joint Driveline and Overrunning Clutch
Hypoid Gearbox with Tapered Roller Bearings
89.13" (2.3) Pickup (outside Panel to Panel) with 3 Bars and 42 Double Tines
Two Pickup Gauge Wheels
Equal Weight Distribution on both Wheels
Manual Pickup Lift
Safety Chain
Parking Jack
11L x 14 Tires
Adjustable Bale Length 12" to 52" (.3m to 1.3m)
100 Strokes per minute Plunger mounted on 7 Sealed Ball Bearing Rollers
Twine Knotters
Center Line Feed System
Extension Spring Bale Tensioning
Twine Storage Box - 6 Ball Capacity
Bale Counter

Tractor Requirements
45 PTO HP (minimum)
540 RPM PTO

Order Code	Catalog Number	Description	Approx. Weight(lb)	List Price

ONE ITEM FROM EACH GROUP MUST BE SPECIFIED UNLESS NOTED OTHERWISE

BASE MACHINE — GROUP 01

MF1838	700961786YH	1838 Small Rectangular Baler		25,891.00

UPGRADE PACKAGE — GROUP 02

	Base	Standard Mechanical Package Includes: Mechanical Tensioner Less Knotter Blower		**In Base**
	MKT0400	High Performance Package Includes: Hydraulic Tensioner Knotter Blower		1,760.00

FIELD INSTALLED KITS - (order as desired) — GROUP 99

	MKD40416	Bale Chute Kit	28	160.00
	MKD40417	Bale Chute Extension Kit (For use w/ MKD40416, Bale Chute).	47	181.00
	MKD50391	Bale Chute Quarter Turn Kit	78	485.00
	700961890M	Wagon Hitch Kit	95	914.00
	700962517M	Hydraulic Bale Tension Kit	66	1,565.00
	MKD40555	Hydraulic Pickup Lift Kit (Requires one Double Acting Remote Valve)	10	430.00
	MKD40445	Field Light Kit	10	267.00
	MKD40634	Bale Thrower Kit with Electronic Speed Control. (Order Separately)	510	8,110.00
	700963602M	Knotter Blower Kit Requires Harness Kit 700963604M		417.00
	700963604M	Knotter / Blower Field Light Harness		TBA
	71428520M	Ship Safe Preservative Coating (Factory Applied) (Recommended for shipments occurring in November through March 31ST)		604.00

ORDER FROM PARTS

	700726939	French Operators Manual and Decal Kit	2	No Charge
	700726940	Spanish Operators Manual and Decal Kit	2	No Charge

For Information on AGCO Hay Preservative and Applicators For Balers, See Pages 83 & 84.

HESSTON by MASSEY FERGUSON

1836 SMALL RECTANGULAR BALER

FOB Hesston, KS

STANDARD EQUIPMENT

14" x 18" (.4m x .5m) Bale Chamber
U-Joint - Constant Velocity 3-Joint Driveline and Overrunning Clutch
Hypoid Gearbox with Tapered Roller Bearings
73.5" (1.9m) Pickup (outside Panel to Panel) with 3 Bars and 33 Double Tines
Two Pickup Gauge Wheels
Equal Weight Distribution on both Wheels
Manual Pickup Lift
Safety Chain
Parking Jack
9.5L x 14 Floatation Tires
Adjustable Bale Length 12" to 52" (.3m to 1.3m)
92 Strokes per minute Plunger mounted on 7 Sealed Ball Bearing Rollers
Twine Knotters
Center Line Feed System
Extension Spring Bale Tensioning
Twine Storage Box - 4 Ball Capacity
Bale Counter

Tractor Requirements
45 PTO HP (minimum)
540 RPM PTO

Order Code	Catalog Number	Description	Approx. Weight(lb)	List Price
ONE ITEM FROM EACH GROUP MUST BE SPECIFIED UNLESS NOTED OTHERWISE				
BASE MACHINE				**GROUP 01**
MF1836	700961787YH	1836 Small Rectangular Baler		23,692.00
KNOTTER BLOWER				**GROUP 03**
Q601	700960991	Less Blower		**In Base**
Q602	700959753	Knotter Blower		349.00
FIELD INSTALLED KITS - (order as desired)				**GROUP 99**
	MKD40416	Bale Chute Kit	28	160.00
	MKD40417	Bale Chute Extension Kit (For use w/ MKD40416, Bale Chute)	47	181.00
	MKD50391	Bale Chute Quarter Turn Kit	78	485.00
	700961890M	Wagon Hitch Kit	95	914.00
	700962517M	Hydraulic Bale Tension Kit	66	1,565.00
	MKD40555	Hydraulic Pickup Lift Kit (Requires one Double Acting Remote Valve)	10	430.00
	MKD40445	Field Light Kit	10	267.00
	MKD40634	Bale Thrower Kit with Electronic Speed Control. (Order Separately)	510	8,110.00
	700959759M	Knotter Blower Kit Requires Harness Kit 700963604M		417.00
	700963604M	Knotter / Blower Field Light Harness		TBA
	71428520M	Ship Safe Preservative Coating (Factory Applied). (Recommended for shipments occurring in November through March 31ST)		604.00
ORDER FROM PARTS				
	700726939	French Operators Manual and Decal Kit	2	No Charge
	700726940	Spanish Operators Manual and Decal Kit	2	No Charge

For Information on AGCO Hay Preservative and Applicators For Balers, See Pages 83 & 84.

Reserved

HESSTON
by MASSEY FERGUSON

LARGE SQUARE BALERS

LARGE RECTANGULAR BALERS

FOB Hesston, KS

PRODUCT INFORMATION

	2290	2270XD	2270	2250
BALE SIZE				
Width:	47.2" (1.2m)	47.2" (1.2m)	47.2" (1.2m)	31.5" (.8m)
Height:	50" (1.3m)	34.4" (.9m)	34.4" (.9m)	34.4" (.9m)
Length:	Up to 108" (2.7m)	Up to 108" (2.7m)	Up to 108" (2.7m)	Up to 108" (2.7m)
*Weight:	Up to 2,000 lbs. (907kg)	Up to 1,700 lbs. (771kg)	Up to 1,500lbs. (680kg)	Up to 1,000 lbs (454kg)
PICK-UP				
Width-Tine to Tine:	80.6" (2m)	80.6" (2m)	80.6" (2m)	80.6" (2m)
Tine Spacing:	2.6" (.1m)	2.6" (.1m)	2.6" (.1m)	2.6" (.1m)
No. of Tine Bars	4	4	4	4
No. of Tines	128	128	128	128
TIRES				
Single Axle	28Lx26	700/50-22.5	700/50-22.5	600/50x22.5
Tandem Axle	500/45x22.5	500/45x22.5	500/45x22.5	550/50x17
TRACTOR REQUIREMENTS				
Horsepower Minimum (Non cutter) Recommended	 150 HP (101 kw) 180 HP (112 kw)	 150 HP (101 kw) 180 HP (112 kw)	 130 HP (97 kw) 170 HP (112 kw)	 120 HP (90 kw) 150 HP (112 kw)
Minimum (With cutter)	N/A	210 HP (157 kw)	200 HP (149 kw)	180 HP (134 kw)
PTO	1000 RPM	1000 RPM	1000 RPM	1000 RPM
Hydraulics	One Single Acting Remote Valve	One Single Acting Remote Valve	One Single Acting Remote Valve	One Single Acting Remote Valve

*** Weight determined in Alfalfa crop at ideal moisture level.**

NOTE: This is a general sales guide; for further product details and official specifications refer to product information guides and product literature.

HESSTON by MASSEY FERGUSON

2290 LARGE RECTANGULAR BALER

FOB Hesston, KS

STANDARD EQUIPMENT

47.2" x 50" (1.2m x 1.3m) Bale Chamber
102.2" (2.6m) OptiFlow™ Wide Pickup with Gathering Augers, Gauge Wheels and Hydraulic Lift
Knotter Fan
Bale Counter (in Monitor)
Bale Length Adjustable Up to 108" (2.7m)
Automatic Knotter Lube
Plunger Speed 33 Strokes per minute
Plunger Stroke 32.8" (.8m) Long
Tying Mechanism - 6 Heavy Duty Double Knotters
Lights for Night Operation
Warning Lights
Parking Jack
Safety Chain
Ejector Standard on Cutter Balers
Selectable Bale Ejection- Partial or Full
E-Coat Primer with Powder Paint
Removable Gauge Wheel
Roller Windguard
Diamond Bevel Plate Drive Chain
Twine Requirements - Heavy Duty Plastic
Fork Type Feed System Packing into Separate Charge Chamber
Bale Case Compression - 2 Hydraulic Cylinders Provide Compression to Top and Side Members
Automatic Density Control Monitors Plunger and Automatically Controls Hydraulic Cylinders on Bale Case
Twine Boxes - 30 Ball Capacity
On-Board Hydraulic System
Silage Ready (Roller Chute Recommended)
Folding Safety Rails

Tractor Requirements
150 PTO HP (minimum), 180 HP Recommended
1000 RPM
One Double Acting Remote Valve (Pick-up)
One Single Acting Remote Valve (Tandem Option)
Bale Control Monitor required to Operate Baler (See Group 98)

Order Code	Catalog Number	Description	Approx. Weight(lb)	List Price
ONE ITEM FROM EACH GROUP MUST BE SPECIFIED UNLESS NOTED OTHERWISE				
BASE MACHINE				**GROUP 01**
MF2290-Q703	700963144YH	2290 Large Rectangular Baler	11360	181,142.00
AXLE				**GROUP 02**
50-Q501	700956293	Single Axle with 28Lx26, 16 Ply Tires, Less Brakes		**In Base**
50-Q503	700956294*	Single Axle with 28Lx26, 16 Ply Tires with Hydraulic Brakes		3,335.00
50-Q502	700960751	Tandem Axle w/ 500/45x22.5, 16 Ply Tires, Less Brakes	1780	10,450.00
50-Q504	700960752*	Tandem Axle w/ 500/45x22.5, 16 Ply Tires with Hydraulic Brakes	1780	16,615.00
***5 MONTH LEAD TIME REQUIRED**				
TIRE UPGRADE - OPTIONAL				**GROUP 03**
75-B114	700960779	Upgrade to 620/40R X 22.5 tires (Tandem Axle only)		4,530.00
LUBRICATION- OPTIONAL				**GROUP 04**
30-B901	700963605	Automatic Chain Lubrication System - Packer Baler		1,287.00
EJECTOR- OPTIONAL				**GROUP 05**
25-Q902	700963605	Ejector		3,389.00

2290 LARGE RECTANGULAR BALER

Order Code	Catalog Number	Description	Approx. Weight(lb)	List Price
DRIVELINE- FIELD INSTALLED - Required				**GROUP 06**
	MK41290	Type 2, 1-3/8” 21-Tooth PTO	50	755.00
	MK41213	Type 3, 1-3/4” 20-Tooth PTO	50	1,209.00
BALE CONTROL MONITOR - FIELD INSTALLED				**GROUP 98**
		Includes harness, power adapter and hardware to mount Console inside the tractor cab. Required for tractors not equipped with ISO 11783 plug and Console.		
	700957986M	C1000 Monitor		3,032.00
	700959598M	C2100 Monitor		4,548.00
FIELD INSTALLED KITS - (order as desired)				**GROUP 99**
	700961696M	Knotter Trip Kit (Requires Module Kit - 700960668M)		934.00
	MK41208	Flat Bale Chute (Required if AC25 Bale Accumulator is not used)		1,451.00
	700960976M	Roller Bale Chute (2200 series only)		2,753.00
	700961822M	Kit - Hydraulics, Roller Bale Chute without Ejector		625.00
	700960798M	Bale Weight Kit (Requires Module Kit - 700960668M)		1,698.00
	700960668M	Module Kit.		917.00
	700960673M	Hydraulic Jack Kit		1,004.00
	700960974M	Bale Ejector Kit		3,389.00
	700963607M	Chain Lube Kit for Packer Baler		1,427.00
	71427873M	Ship Safe Preservative Coating (Factory Applied) (Recommended for shipments occurring in November through March 31ST)		604.00
ORDER FROM PARTS				
	72570307	Telemetry-STD Plus		ORDER FROM PARTS
	700179375	Telemetry-Installation Kit		ORDER FROM PARTS
	700741496	French Operators Manual and Decal Kit.	2	No Charge
	700741497	Spanish Operators Manual and Decal Kit	2	No Charge

For Information on AGCO Hay Preservative and Applicators For Balers, See Pages 83 & 84.

HESSTON by MASSEY FERGUSON

2270 LARGE RECTANGULAR BALER

FOB Hesston, KS

STANDARD EQUIPMENT

47.2" x 34.4" (1.2m x .9m) Bale Chamber
102.2" (2.6m) Wide Pickup with Gathering Augers, Gauge Wheels and Hydraulic Lift
Knotter Fan
Bale Counter (in Monitor)
Bale Length Adjustable Up to 108" (2.7m)
Automatic Knotter Lube
Plunger Speed: 47 Strokes per minute
Plunger Stroke: 29.1" (.7m) Long
Tying Mechanism - 6 Heavy Duty Double Knotters
Lights for Night Operation
Warning Lights
Parking Jack
Safety Chain
Bale Ejection
Selectable Bale Ejection- Partial or Full
E-Coat Primer with Powder Paint
Removable Gauge Wheel
Roller Windguard
Diamond Bevel Plate Drive Chain
Twine Requirements - Heavy Duty Plastic
Fork Type Feed System Packing into Separate Charge Chamber
Bale Case Compression - 2 Hydraulic Cylinders Provide Compression to Top and Side Members
Automatic Density Control Monitors Plunger and Automatically Controls Hydraulic Cylinders on Bale Case
Twine Boxes - 30 Ball Capacity
On-Board Hydraulic System
Silage Ready (Roller Chute Recommended)
Folding Safety Rails

ProCut™ Rotor Cutter
'V' Shaped Rotor Pattern Design - 25.5" (650mm) Diameter
Bolt on Finger Sections
Hydraulic Drop Down & Slide-out Knife Bed Drawer
• 26 knives at 1.5" cut lengths
Easily Removable Knives with No Tools Required

Tractor Requirements
130 PTO HP (minimum), 1000 RPM
200 PTO HP (minimum), 1000 RPM, for Cutter Units
One Double Acting Remote Valve (Pick-up)
One Single Acting Remote Valve (Tandem Option)
Bale Control Monitor required to Operate Baler (See Group 98)

Order Code	Catalog Number	Description	Approx. Weight(lb)	List Price
ONE ITEM FROM EACH GROUP MUST BE SPECIFIED UNLESS NOTED OTHERWISE				
BASE MACHINE				**GROUP 01**
MF2270-Q703	700963127YH	2270 Large Rectangular Baler	11360	150,509.00
MF2270-Q701	700961829YH	2270 Large Rectangular Baler with ProCut™ Rotor Cutter.		168,144.00
AXLE				**GROUP 02**
50-Q501	700958765	Single Axle with 700/50-22.5, 16 Ply Tires, Less Brakes . .		**In Base**
50-Q503	700958766*	Single Axle with 700/50-22.5, 16 Ply Tires . . . . . with Hydraulic Brakes		3,279.00
50-Q502	700960786	Tandem Axle w/ 500/45x22.5, 12 Ply Tires, Less Brakes. .	1780	10,260.00
50-Q504	700960787*	Tandem Axle w/ 500/45x22.5, 12 Ply Tires . . . . . with Hydraulic Brakes	1780	16,309.00
***5 MONTH LEAD TIME REQUIRED**				
TIRE UPGRADE - OPTIONAL				**GROUP 03**
75-B114	700960779	Upgrade to 620/40R X 22.5 tires (Tandem Axle only)		4,530.00
LUBRICATION- OPTIONAL				**GROUP 06**
30-B901	700963605	Automatic Chain Lubrication System - Packer Baler		1,287.00
30-B902	700963606	Automatic Chain Lubrication System - Cutter Baler		1,638.00

2270 LARGE RECTANGULAR BALER

Order Code	Catalog Number	Description	Approx. Weight(lb)	List Price
DRIVELINE- FIELD INSTALLED - Required				**GROUP 09**
	MK41290	Type 2, 1-3/8" 21-Tooth PTO	50	755.00
	MK41213	Type 3, 1-3/4" 20-Tooth PTO	50	1,209.00
BALE CONTROL MONITOR - FIELD INSTALLED				**GROUP 98**
Includes harness, power adapter and hardware to mount Console inside the tractor cab. Required for tractors not equipped with ISO 11783 plug and Console.				
	700957986M	C1000 Monitor		3,032.00
	700959598M	C2100 Monitor		4,548.00
FIELD INSTALLED KITS - (order as desired)				**GROUP 99**
	700961696M	Knotter Trip Kit (Requires Module Kit - 700960668M)		934.00
	700960673M	Hydraulic Jack Kit		1,004.00
	700960800M	Bale Weight Kit (Requires Module Kit -- 700960668M)		1,698.00
	700960668M	Module Kit		917.00
	700960977M	Roller Bale Chute (2200 series only)		2,753.00
	MK41208	Flat Bale Chute (Required if AC25 Bale Accumulator is not used)		1,451.00
	700963607M	Chain Lube Kit for Packer Baler		1,427.00
	700963608M	Chain Lube Kit for Cutter Baler		1,788.00
	71427873M	Ship Safe Preservative Coating (Factory Applied) (Recommended for shipments occurring in November through March 31ST)		604.00
ORDER FROM PARTS				
	72570307	Telemetry-STD Plus		ORDER FROM PARTS
	700179375	Telemetry-Installation Kit		ORDER FROM PARTS
	700741496	French Operators Manual and Decal Kit	2	No Charge
	700741497	Spanish Operators Manual and Decal Kit	2	No Charge

For Information on AGCO Hay Preservative and Applicators For Balers, See Pages 83 & 84.

HESSTON by MASSEY FERGUSON

2270XD LARGE RECTANGULAR BALER

FOB Hesston, KS

STANDARD EQUIPMENT

47.2" x 34.4" (1.2m x .9m) Bale Chamber
102.2" (2.6m) OptiFlow™ Wide Pickup with Gathering Augers, Gauge Wheels and Hydraulic Lift
Knotter Fan
Bale Counter (in Monitor)
Bale Length Adjustable Up to 108" (2.7m)
Automatic Knotter Lube
Plunger Speed: 47 Strokes per minute
Plunger Stroke: 29.1" (.7m) Long
Tying Mechanism - 6 Heavy Duty Double Knotters
Lights for Night Operation
Warning Lights
Parking Jack
Safety Chain
Bale Ejector
Selectable Bale Ejection- Partial or Full
E-Coat Primer with Powder Paint
Removable Gauge Wheel
Roller Windguard
Diamond Bevel Plate Drive Chain
Twine Requirements - Heavy Duty Plastic
Fork Type Feed System Packing into Separate Charge Chamber
Bale Case Compression - 2 Hydraulic Cylinders Provide Compression to Top and Side Members
Automatic Density Control Monitors Plunger and Automatically Controls Hydraulic Cylinders on Bale Case
Twine Boxes - 30 Ball Capacity
On-Board Hydraulic System
Silage Ready (Roller Chute Recommended)
Folding Top Rails

ProCut™ Rotor Cutter
'V' Shaped Rotor Pattern Design - 25.5" (650mm) Diameter
Bolt on Finger Sections
Hydraulic Drop Down & Slide-out Knife Bed Drawer
• 26 knives at 1.5" cut lengths
Easily Removable Knives with No Tools Required

Tractor Requirements
150 PTO HP (minimum), 1000 RPM
180 PTO HP (recommended)
210 PTO HP (minimum), 1000 RPM with Cutter Units
One Double Acting Remote Valve (Pick-up)
One Single Acting Remote Valve (Tandem Option)
Bale Control Monitor required to Operate Baler
See Group 98

Order Code	Catalog Number	Description	Approx. Weight(lb)	List Price
ONE ITEM FROM EACH GROUP MUST BE SPECIFIED UNLESS NOTED OTHERWISE				
BASE MACHINE				**GROUP 01**
MF2270XD~Q706	700963136YH	2270XD Large Rectangular Baler	17000	172,229.00
MF2270XD~Q710	700963137YH	2270XD Large Rectangular Baler w/ ProCut™Rotor Cutter		189,649.00
AXLE				**GROUP 02**
50-Q501	700958765	Single Axle with 700/50-22.5, 16 Ply Tires, Less Brakes		**In Base**
50-Q503	700958766*	Single Axle with 700/50-22.5, 16 Ply Tires with Hydraulic Brakes		3,279.00
50-Q502	700960786	Tandem Axle w/ 500/45x22.5, 12 Ply Tires, Less Brakes	1780	10,260.00
50-Q504	700960787*	Tandem Axle w/ 500/45x22.5, 12 Ply Tires with Hydraulic Brakes	1780	16,309.00
TIRE UPGRADE - OPTIONAL				**GROUP 03**
75-B114	700960779	Upgrade to 620/40R X 22.5 tires (Tandem Axle only)		4,530.00
LUBRICATION- OPTIONAL				**GROUP 04**
30-B901	700963605	Automatic Chain Lubrication System - Packer Baler		1,287.00
30-B902	700963606	Automatic Chain Lubrication System - Cutter Baler		1,638.00

***5 MONTH LEAD TIME REQUIRED**

2270XD LARGE RECTANGULAR BALER

Order Code	Catalog Number	Description	Approx. Weight(lb)	List Price
DRIVELINE- FIELD INSTALLED - Required				**GROUP 05**
	700958792M	Type 3, 1-3/4” 20-Tooth PTO	50	1,209.00
BALE CONTROL MONITOR - FIELD INSTALLED				**GROUP 98**
Includes harness and hardware to mount C1000 Monitor inside the tractor cab. Required for tractors not equipped with ISO 11783 plug and C1000 Monitor.				
	700957986M	C1000 Monitor		3,032.00
	700959598M	C2100 Monitor		4,548.00
FIELD INSTALLED KITS - (order as desired)				**GROUP 99**
	700961696M	Knotter Trip Kit (Requires Module Kit - 700960668M)		934.00
	700960673M	Hydraulic Jack Kit		1,004.00
	700960977M	Roller Bale Chute (2200 series only)		2,753.00
	700960800M	Bale Weight Kit (Requires Module Kit -700960668M)		1,698.00
	700960668M	Module Kit		917.00
	MK41208	Flat Bale Chute (Required if AC25 Bale Accumulator is not used)		1,451.00
	700963607M	Chain Lube Kit for Packer Baler		1,427.00
	700963608M	Chain Lube Kit for Cutter Baler		1,788.00
	71427873M	Ship Safe Preservative Coating (Factory Applied) (Recommended for shipments occurring in November through March 31)		604.00
ORDER FROM PARTS				
	72570307	Telemetry-STD Plus		ORDER FROM PARTS
	700179375	Telemetry-Installation Kit		ORDER FROM PARTS
	700741496	French Operators Manual and Decal Kit	2	No Charge
	700741497	Spanish Operators Manual and Decal Kit	2	No Charge

For Information on AGCO Hay Preservative and Applicators For Balers, See Pages 83 & 84.

HESSTON by MASSEY FERGUSON

2250 LARGE RECTANGULAR BALER

FOB Hesston, KS

STANDARD EQUIPMENT

31.5" x 34.4" (.8m x .9m) Bale Chamber
Bale Length Adjustable Up to 108" (2.7m)
Knotter Fan
Parking Jack
On-Board Hydraulic System
102.2" (2.6m) Wide Pickup w/ Gathering Augers, Gauge Wheels, & Hydraulic Lift
Fork Fed Charge Chamber
Plunger Speed - 47 Strokes per Minute
Plunger Stroke - 29.1" (.7m)
Automatic Density Control
Safety Chain
Folding Safety Rails
Lights for Night Operation
Selectable Bale Ejection- Partial or Full
E-Coat Primer with Powder Paint
Removable Gauge Wheel
Roller Windguard
Diamond Bevel Plate Drive Chain
Bale Chamber Compression - 2 Hydraulic Cylinders
Tying Mechanism- 4 Heavy Duty Double Knotters
Twine Boxes - 30 Ball Capacity
Twine Requirements - Heavy Duty Plastic
Automatic Knotter Lube
Bale Ejector
Silage Ready (Roller Chute Recommended)

Tractor Requirements
120 PTO HP (90 kw) (Minimum)
170 PTO HP (134 kw) (Minimum w/ Cutter)
1000 RPM PTO
One Double Acting Remote Valve (Pickup)
One Double Acting Remote Valve (Cutter Option)
One Single Acting Remote Valve (Tandem Option)
Bale Control Monitor required to operate Baler (See Group 98)

2250 Packer Cutter ONLY
RC100H Roller Drive Chain
Drive Protection - Splined Slip Clutch
Three Oil Filled Bearing Boxes
Six Knives - 4.6" (.1m) Knife Spacing

ProCut™ Rotor Cutter
'V' Shaped Rotor Pattern Design-25.5" (650mm) Dia.
Bolt on Finger Sections
Hydraulic Drop Down & Slide-out Knife Bed Drawer
- 17 knives at 1.5" cut lengths

Easily Removable Knives with No Tools Required

Tractor Requirements
120 PTO HP (112 kw) (Minimum)
150 PTO HP (Recommended)
180 PTO HP (134 kw) (Minimum with Cutter)
1000 RPM PTO
One Double Acting Cylinder (Pickup)
One Double Acting Cylinder (Packer /Cutter)
One Single Acting Cylinder (Tandem Option)
Bale Control Monitor required to operate Baler (See Group 98)

Order Code	Catalog Number	Description	Approx. Weight(lb)	List Price

ONE ITEM FROM EACH GROUP MUST BE SPECIFIED UNLESS NOTED OTHERWISE

BASE MACHINE				**GROUP 01**
MF2250~Q703	700963106YH	2250 Large Rectangular Baler		119,896.00
MF2250~Q705	700963107YH	2250 Packer / Cutter Large Rectangular Baler		129,457.00
MF2250~Q701	700961825YH	2250 Large Rectangular Baler with ProCut™ Rotor Cutter.		137,640.00
AXLE				**GROUP 02**
50-Q501	700958772	Single Axle with 600-50 x 22.5, 12 Ply Tires, Less Brakes		**In Base**
50-Q503	700958773*	Single Axle with 600-50 x 22.5, 12 Ply Tires, with Hydraulic Brakes		3,228.00
50-Q502	700960783	Tandem Axle with 500-50 x 17, 16 Ply, Less Brakes		9,779.00
50-Q504	700960784*	Tandem Axle with 500-50 x 17, 16 Ply with Hydraulic Brakes		14,000.00

***5 MONTH LEAD TIME REQUIRED**

TIRE UPGRADE - OPTIONAL				**GROUP 03**
75-B114	700960779	Upgrade to 620/40R X 22.5 tires (Tandem Axle only)		4,530.00
LUBRICATION- OPTIONAL				**GROUP 04**
30-B901	700963605	Automatic Chain Lubrication System - Packer Baler		1,287.00
30-B902	700963606	Automatic Chain Lubrication System - Cutter Baler		1,638.00

2250 LARGE RECTANGULAR BALER

Order Code	Catalog Number	Description	Approx. Weight(lb)	List Price
DRIVELINE- FIELD INSTALLED - Required				**GROUP 05**
	MK41290	Type 2, 1-3/8" 21-Tooth PTO	50	755.00
	MK41213	Type 3, 1-3/4" 20-Tooth PTO	50	1,209.00
BALE CONTROL MONITOR-FIELD INSTALLED				**GROUP 98**
Includes harness, power adapter and hardware to mount Console inside the tractor cab. Required for tractors not equipped with ISO 11783 plug and Console.				
	700957986M	C1000 Monitor		3,032.00
	700959598M	C2100 Monitor		4,548.00
FIELD INSTALLED KITS - (order as desired)				**GROUP 99**
	700961696M	Knotter Trip Kit (Requires Module Kit - 700960668M)		934.00
	700960673M	Hydraulic Jack Kit		1,004.00
	700960801M	Bale Weight Kit (Requires Module Kit -700960668M)		1,698.00
	700960668M	Module Kit.		917.00
	700960978M	Roller Bale Chute (2200 series only)		2,753.00
	MK41242	Flat Bale Chute Kit (Required if AC20 Accumulator is not ordered)	134	682.00
	700963607M	Chain Lube Kit for Packer Baler		1,427.00
	700963608M	Chain Lube Kit for Cutter Baler		1,788.00
	71427873M	Ship Safe Preservative Coating (Factory Applied) (Recommended for shipments occurring in November through March 31ST)		604.00
ORDER FROM PARTS				
	72570307	Telemetry-STD Plus		ORDER FROM PARTS
	700179375	Telemetry-Installation Kit		ORDER FROM PARTS
	700741496	French Operators Manual and Decal Kit.	2	No Charge
	700741497	Spanish Operators Manual and Decal Kit.	2	No Charge

For Information on AGCO Hay Preservative and Applicators For Balers, See Pages 83 & 84.

HESSTON by MASSEY FERGUSON

AC25 BALE ACCUMULATOR

Primary Color; Grey

FOB Beloit, KS

STANDARD EQUIPMENT

Attaches to and is towed by 2290, 2270, 2270XD Balers
Capacity - Three Bales
Electronic Bale Shift Control Built into Baler Control Console
Electronic Monitoring built into Baler Control Console
Centralized Lube System - One 12 Point Positive Displacement Grease Divider Valve plus One Direct Lube Line
Width: 156" (4m)
Bale Size - 48" Wide x 51" High x 81" to 108" Long (1.2m Wide x 1.3m High x 2.1m to 2.7m Long)
Axle Type - 2 Dual Wheel Casters with Stabilizing Brake
Four 9.5L x 14 Tires
Bale Unloading Control - Electrical Standard, Operator Controlled
Hydraulics - Solenoid Valve Mounted to Rear of Baler, uses Baler Hydraulic Circuit

Order Code	Catalog Number	Description	Approx. Weight(lb)	List Price

ONE ITEM FROM EACH GROUP MUST BE SPECIFIED UNLESS NOTED OTHERWISE

BASE MACHINE **GROUP 01**

MFAC25	700734307	AC25 Bale Accumulator	3292	21,578.00

MOUNTING KITS - REQUIRED FOR USE **GROUP 02**

	700739350M	Mounting Kit, Required for 2270XD and 2290	215	1,416.00

FIELD INSTALLED KITS - (order as desired) **GROUP 99**

	MK41298*	Bale Weight Scales	161	6,756.00

*Roller bale chute and roller chute scale kit cannot be used with accumulator. Order accumulator scale kit MK41298 if bale weight is desired. Bale weight is displayed on console identical to roller scale kit. No baler Module kit required with accumulator scale kit.

ORDER FROM PARTS

	700734321	French Operators Manual and Decal Kit	2	No Charge
	700734322	Spanish Operators Manual and Decal Kit	2	No Charge

***** Mounting Kit 700739350M can also be used to mount Hesston 4925 Accumulator to a 2290, 2270 or 2270XD.

AC20 BALE ACCUMULATOR

Primary Color; Grey

FOB Beloit, KS

STANDARD EQUIPMENT

Attaches to and is towed by 2250 Baler
Capacity - Five Bales
Electronic Bale Shift Control Built into
Baler Control Console
Electronic Monitoring built into
Baler Control Console
Centralized Lube System - One 12 Point Positive
Displacement Grease Divider Valve plus
One Direct Lube Line
Width: Wings Down - 176" (4.5m)
Wings Up - 129" (3.3m)
Bale Size - 31.5" Wide x 34.4" High x 60" to 98" Long
(.8m Wide x .9m High x 1.5m to 2.5m Long)
Axle Type - 2 Dual Wheel Casters with Stabilizing Brake
Bale Unloading Control - Electrical Standard,
Operator Controlled
Hydraulics - Solenoid Valve Mounted to Rear of Baler,
uses the same Tractor Hydraulic Circuit

Order Code	Catalog Number	Description	Approx. Weight(lb)	List Price
ONE ITEM FROM EACH GROUP MUST BE SPECIFIED UNLESS NOTED OTHERWISE				
BASE MACHINE				**GROUP 01**
MFAC20	700734331	AC20 Bale Accumulator.	3455	22,652.00
MOUNTING KITS - Required for Use				**GROUP 02**
	700734454M	Accumulator Mounting Kit, Required for MF2250	199	1,416.00
ORDER FROM PARTS				
	700728991	French Operators Manual and Decal Kit	2	No Charge
	700728992	Spanish Operators Manual and Decal Kit	2	No Charge

***** Mounting Kit 700734454M can also be used to mount Hesston 4720 Accumulator to a MF2250.

HESSTON by MASSEY FERGUSON

SOURCED FROM AGCO PARTS

The following Information will help you with the selection of your AGCO Hay Preservative Application System Selection.

1. The HayBoss G2 now plugs into the C1000 Terminal, OR be controlled using an iPad Mini 2 and the Hay App.
2. The HayBoss G2 now plugs into select VT (Virtual Terminals).
   (Virtual Terminals (ISOBUS Displays) are compatible with the HayBoss G2 - 600 Series.)
3. All 400 T Series HayBoss Systems are controlled using an iPad Mini 2 and the Hay App.

AGCO Hay Preservative - U.S.	
Drum - 13 U.S. gallons/49.2 liters (120 lb/54.5 kg) (Not Available in California)	HT15DR
Drum - 50 U.S. gallons/189.3 liters (450 lb/204 kg) (Not Available in California)	HT55DR
4 Drums per Pallet - each drum 50 U.S. gallons/189.3 liters; 200 total U.S. gallons/757 liters (1,800 lb/817 kg per pallet) (Not Available in California)	HT55DR-PQ
Tote - 200 U.S. gallons/757 liters (1,800 lb/817 kg)	HT200MB
Tote - 270 U.S. gallons/1,021.8 liters (2,380 lb/1,079.6 kg)	HT270MB
AGCO Hay Preservative - Canada	
Drum - 13 U.S. gallons/49.2 liters (120 lb/54.5 kg)	HT15DRC
Drum - 50 U.S. gallons/189.3 liters (450 lb/204 kg)	HT55DRC
4 Drums per Pallet - each drum 50 U.S. gallons/189.3 liters; 200 total U.S. gallons/757 liters (1,800 lb/817 kg per pallet)	HT55DR-PQC
Tote - 270 U.S. gallons/1,021.8 liters (2,380 lb/1,079.6 kg)	HT270MBC

Description	Hayboss G2	HayBoss	Electronic	Manual	Tank Size	Upgrade Electronic to HayBoss G2	Upgrade Moisture Only to HayBoss G2
Large Square Balers							
2250 & 2270 ProCut	HT6964542B		HT4914542		110 gal	HT6654542B	HT5004542B
2250 & 2270 ProCut w/drum holder			HT4614542		55 gal		
2250, 2270, 2270XD & 2290 w/o cutter	HT6964518B		HT4914518		110 gal	HT6654518B	HT5004518B
2250, 2270 & 2290 w/drum holder			HT4614518		55 gal		
2250, 2270, & 2290 w/ roto-cutter	HT6964519B		HT4914519		110 gal	HT6654519B	HT6654519B
2250, 2270 & 2290 w/roto-cutter, w/drum holder			HT4614519		55 gal		
Large Round Balers							
1734, 1745		H446T4484B	HT4414484	HT4394484	25 gal		
2946, 2946A, 2956 & 2956A	HT6494524B	H449T4524B	HT4484524		55 gal		
Small Square Balers							
1840 (2-tie only)	HT6444416B	H444T4416B	HT4344416	HT4324416	55 gal		
1844N & 1844S (3-tie)	HT6504485B	H444T4485B	HT4484485		55 gal		

SOURCED FROM AGCO PARTS

Individual Bale Identification, G2 RFV Calculator, Upgrade Kits and Accessories for Large Square Balers

HayBoss G2 Individual Bale Identification System - RFID Tags	
RFID Tags for Individual Bale Identification System (1 Roll - 850 Tags)	HT12-0851A
RFID Tags for Individual Bale Identification System (3 Rolls - 2,550 Tags)	HT12-0853A
RFID Tags for Individual Bale Identification System (6 Rolls - 5,100 Tags)	HT12-0856A
HayBoss G2 Individual Bale Identification System - Scanner and Antenna Options	
G2 Individual Bale Identification-Tagger Only	HT850
G2 Individual Bale Identification (G2 RFID Tagging System Bundle), Includes: HT850 (G2 Tagger), HT860 (Handheld Scanner) & HT12-0851A (RFID Tags, 1 Roll)	HT852
Handheld Scanner for HayBoss G2 Individual Bale Identification System (Also Includes Loader Attachment and Antenna for Reading up to 3 Bales)	HT860
Handheld Scanner for HayBoss G2 Individual Bale Identification System (Hand Held Only)	HT861
Remote Floor Switch for HT860	HT870
HayBoss G2 RFV Calculator RFV EQUIPPED	
G2 RFV Calculator - (Software Update so RFV can be calculated on-baler while in the field baling.)	HT800RFV
Dye Spray Marker Kits	
Dye Spray Marker Kit for Large Square Balers Only - RFV Equipped (HayBoss G2 Only)	HT845RFV
Blue Dye for Dye Spray Kit for Large Square Balers Only - RFV Equipped; 20-gram concentrate makes 5-gallons	HT0801
Dye Sprayer Kit for Large Square and Small Square Balers (HayBoss G2 Only)	HT0840
Red Dye for Dye Sprayer for Large Square and Small Square Balers, HT0840; 10.8-gram concentrate makes 3-gallons	HT0800
Upgrade Kits and Accessories	
Upgrade Kit to Automatic AGCO HayBoss. Small Square Balers: Challenger, Hesston, New Idea, John Deere, New Holland and universal applications.	H462T4400A
Upgrade Kit to Automatic AGCO HayBoss. Round Balers: Challenger, Hesston, New Idea, John Deere, New Holland (non BR) and universal applications.	H463T4400C
Moisture Only (For MF 2100 & 2200 Series and Challenger LB33B, LB34B, LB34BXD & LB44B, and 2200 Series Balers Only) HayBoss G2 Information Processor (G2IP), rate and end-of-bale sensors and Starwheel moisture sensors (monitor not included since HT600A plugs into C1000)	HT600A
Moisture Only (For AGCO Brand Balers Prior to the New Generation (2007) and All Other Baler Brands) HayBoss G2 Information Processor (G2IP), rate and end-of-bale sensors and Starwheel moisture sensors (monitor not included since HT600 plugs into C1000)	HT600
Moisture Only for Small Square Balers (All brands. Monitor not included since HT600SS plugs into C1000)	HT600SS
Moisture Only for Round Balers (All brands. Monitor not included since HT600RB plugs into C1000)	HT600RB
Moisture Only for JD Large Square Balers L330 & L340	HT600J
Moisture Only for Case IH LB4 Large Square Balers and New Holland BB Large Square Balers	HT600BB
HayBoss G2 Dual Channel Processor Only (G2DCP)	HT664
500 Series High Output Flow Meter Kit (Fits all HayBoss G2 Systems)	HT500XHI
400 Series iPad Conversion Kit (2005 Model Year and Newer)	HT4672A
600 Series iPad Conversion Kit (Not Compatible with 500 Series or Older HayBoss G2)	HT6672A
Field Ready iPad Mini 2, Case, Mount, & Charging Device. For use with 400T & 600 series. Note – 600 Series Require HT6672A Bluetooth Box.	H30-2670DK
Case for iPad Mini 2, Mount, and Charging (for customer using their own iPad mini 2)	HT2012MK
Electric Transfer Pump (4-gallons per minute)	HT9212
Electric High-Output Transfer Pump (15-gallons per minute)	HT9214
Digital Electronic Flow Meter	HT453
Upgrade Original HayBoss or 464 to the New HayBoss G2	HT666
Shut-Off Eye Kit 464 - Large Square Baler Applicator Kits manufactured in 2001 & later, All 2005 & later AGCO HayBoss including Small Square and Round balers, All 2004 & later Electronic	HT474A
Pause Switch, Floor Mounted; for use w/ AGCO HayBoss system only.	HT475
G2PIP/GPS Interface Kit for AGCO balers equipped with GTA monitors (HayBoss G2 Only)	HT0880
Scale Interface Kit for AGCO balers equipped with GTA monitors (HayBoss G2 Only)	HT0890A
New Holland Scale Interface Kit for balers with Info-view or Intelliview-3 monitors(HayBoss G2 Only)	HT0890N

The Electronic Shut-Off Eye Kit is compatible with all types of applicators (electronic, automatic). It automatically adjusts applicator operation in response to hay movement through the pickup head. For example, when turning at the field's end, the eye turns the spray mechanism off; when the baler is back in the windrow, the eye turns the applicator back on.

Large Square Baler - Bale Weight and Length Kits

One of the features of the HayBoss G2 is that by adding a Bale Weight and Length Kit you can capture the actual weight of the bale on the RFID Tag that is applied with the HayBoss G2 Tagging System. To learn more about the benefits of using the Bale Weight and Length Kit in conjunction with the HayBoss G2 Tagging System, please contact your AGCO Parts Field Parts Manager.

Bale Weight and Length Kits are available for Massey Ferguson, Challenger and AGCO Balers for the model years of 2009 - 2015.

MASSEY FERGUSON®

FORAGE

7515 FORAGE BLOWER

FOB Boisbriand, Quebec Canada

STANDARD EQUIPMENT

Independent Adjustable Transport Wheels
59" (1.5m) Diameter Fan with 8 HD Blade
Water Kit
Overrunning Clutch Kit
Min. recommended HP required: 1HP per foot of silo
2 Sets of Double V-belts on Auger Drive
Shearbolt Protected Drive Line
Safety Chain

Tractor Requirements:

14" Auger: 60 to 160 PTO HP with 540 RPM
14" Auger: 130 to 200 PTO HP with 1000 RPM
16": 140 to 200 PTO HP with 540 RPM
16": 150 to 200 PTO HP with 1000 RPM

Order Code	Catalog Number	Description	Approx. Weight(lb)	List Price
ONE ITEM FROM EACH BOX MUST BE SPECIFIED UNLESS NOTED OTHERWISE				
BASE MACHINE				**GROUP 01**
MF7515		7515 Forage Blower		**In Base**
AUGER / PTO SELECTION				**GROUP 02**
S5504	71485176	14" Diameter Auger,1000 rpm Drive, 1 3/8" 21 Spline Yoke		14,692.00
S5506	71485177	14" Diameter Auger, 1000 rpm Drive, 1 3/4” 20 Spline Yoke		14,794.00
S5505	71485178	16" Diameter Auger, 1000 rpm Drive, 1 3/8" 21 Spline Yoke		15,035.00
S5507	71485179	16" Diameter Auger, 1000 rpm Drive, 1 3/4” 20 Spline Yoke		15,137.00
S5502	71485180	14” Diameter Auger, 540 rpm drive		11,874.00
S5503	71485181	16” Diameter Auger, 540 rpm drive		12,234.00

MASSEY FERGUSON®

SPREADERS

SPREADERS

FOB Marshfield, Wisconsin

PRODUCT INFORMATION

	SP3748	SP3735
Load Rating Capacity		
Bushel	660 Bu	560 Bu
Struck Cu Ft	479	353
Overall Width with Standard Tires	130 (3.3m)	130 (3.3m)
Overall Length	26' 10" (10.2m)	26' 10" (10.2m)
Overall Height with Hydraulic Endgate (Height on 560 is to the top of the top beater)	83" (2.1m)	78" (2.0m)
Weight with Tires	9600 (4354 kg)	8140 lbs (3692 kg)
Standard Tire Size	425x22.5 Used Tire	425x22.5 Used Tire
Rear Hydraulic Endgate	Standard	Standard
Hydraulic Cylinder on Hydraulic Endgate	2	2

STANDARD EQUIPMENT

Double Floor Apron with T-Bar
Hydraulic Endgate with 2 Hydraulic Cylinders
Hydraulic Variable Speed Main Apron Drive
Top Beater
1000 PTO Speed
Lights
Drawbar Safety Chains
Stress Proof Drive Shafts
Jack
Front Splash Panel
Culvert Grade Galvanized Steel Side Flares

Order Code	Catalog Number	Description	Approx. Weight(lb)	List Price

ONE ITEM FROM EACH GROUP MUST BE SPECIFIED UNLESS NOTED OTHERWISE

BASE MACHINE — **GROUP 01**

MFSP3748	700738769	660 Bu with Hydraulic Endgate	47,507.00
MFSP3735	700738768	560 Bu with Hydraulic Endgate	41,209.00

PTO SPEED — **GROUP 02**

	Base	1000 PTO	**In Base**

FIELD INSTALLED KITS - (order as desired) — **GROUP 99**

	700738785	Rear Pan	790.00

MASSEY FERGUSON®

SPREADERS

FOB Marshfield, Wisconsin

PRODUCT INFORMATION

	SP3728	SP3724	SP3719
Load Rating Capacity			
Bushel Struck Cu Ft	430 Bu 275	370 Bu 235	310 Bu 185
Overall Width with Standard Tires	107" (2.7m)	97" (2.5m)	97" (2.5m)
Overall Length	23' 2 1/2" (7.1m)	23' 2 1/2" (7.1m)	21' 11 1/2" (6.1m)
Overall Height with Hydraulic Endgate	63 1/2" (1.6m)	61" (1.5m)	55" (1.4m)
Weight with Tires	5220 lbs (2368 kg)	4920 lbs (2232 kg)	4190 lbs (1901 kg)
Standard Tire Size	16.5 x 16.1	295R22.5 Recap	295R22.5 Recap
Rear Hydraulic Endgate	Standard	Standard	Standard
Hydraulic Cylinder on Hydraulic Endgate	2	2	1/Standard - 2nd/Optional
PTO Speed	540 Standard 1000 Optional	540 Standard 1000 Optional	540 Standard 1000 Optional

STANDARD EQUIPMENT

Front Splash Panel
Rear Hydraulic Endgate
Jack
2 Speed Drive
Drawbar Safety Chains
T-Rod Main Apron Chain
Tire Size 295R22.5 Recap (16.5 x 16.1 - SP3728)
Beater (Diameter 29"/ 79 cm)
2 Hydraulic Cylinders on Hydraulic End Gate (SP3724, SP3728)

Order Code	Catalog Number	Description	Approx. Weight(lb)	List Price

ONE ITEM FROM EACH GROUP MUST BE SPECIFIED UNLESS NOTED OTHERWISE

BASE MACHINE — GROUP 01

MFSP3728	700209043	430 Bu, Hydraulic Endgate (2 Cyl), 275 Cu Ft Struck	25,284.00
MFSP3724	700738766	370 Bu, Hydraulic Endgate (2 Cyl), 235 Cu Ft Struck	22,622.00
MFSP3719	700738764	310 Bu, Hydraulic Endgate, 185 Cu Ft Struck	20,003.00

TIRE AND WHEEL PACKAGE — GROUP 02

MSO16	700738801	16.5 x 16.1 Tires (For SP3719, SP3724 & 3728) Set of 4 In Lieu of Standard Tire	547.00

PTO SPEED — GROUP 03

	Base	540 PTO	**In Base**
MSO1000-FI	700738816	1000 PTO (For SP3719 & SP3724)- In Lieu of 540 PTO	No Charge
MSOW1000FI	700738817	1000 PTO (For SP3728) In Lieu of 540 PTO	No Charge

HYDRAULIC VARIABLE SPEED

MSO13C	700209030	Hydraulic Variable Speed Kit for (2) Hose Hookup	1,429.00
MSO13B	700209032	Hydraulic Variable Speed Kit for (4) Hose Hookup	1,156.00

FIELD INSTALLED KITS - (order as desired) — GROUP 99

700738770	Top Beater (SP3719)	1,033.00
700738778	Top Beater (SP3724 / SP3728)	1,033.00
700738774	2nd Cylinder Hydraulic Endgate (SP3719)	440.00
700738784	Electric Controls for Hydraulic Drive	439.00

SPREADERS

FOB Marshfield, Wisconsin

PRODUCT INFORMATION

	SP3717	SP3714	SP3710
Load Rating Capacity			
Bushel	270 Bu	235 Bu	175 Bu
Struck Cu Ft	167	143	105
Overall Width with Standard Tires	92 1/2" (2.3m)	92 1/2" (2.3m)	83 1/2" (2.1m)
Overall Length	20' 5 1/2" (6.3m)	18' 6" (5.7m)	17' 8" (5.4m)
Overall Height with Hydraulic Endgate	55" (1.4m)	55" (1.4m)	49" (1.2m)
Weight with Tires	3230lbs (1495 kg)	2890lbs (1311 kg)	2030lbs (921 kg)
Standard Tire Size	295R22.5 Recap	295R22.5 Recap	8.25x20
Rear Hydraulic Endgate	Standard	Standard	Optional
Hydraulic Cylinder on Hydraulic Endgate	1/Standard-2nd/Optional	1/Standard-2nd/Optional	1/Standard

STANDARD EQUIPMENT

Front Splash Panel
2 Speed Drive
Jack
540 PTO Speed
Drawbar Safety Chains
T-Rod Main Apron Chain
Tire Size- 295R 22.5 Recap (SP3714 and SP3717)
Tire Size- 9.27 x 20 (SP3710)
Beater (Diameter 29" (.7m))
1 Hydraulic Cylinder on Hydraulic Gate (SP3714 and SP3717)

Order Code	Catalog Number	Description	Approx. Weight(lb)	List Price

ONE ITEM FROM EACH GROUP MUST BE SPECIFIED UNLESS NOTED OTHERWISE

BASE MACHINE — **GROUP 01**

MFSP3717	700738763	270 Bu with Hydraulic Endgate, Manual Apron Drive	16,856.00
MFSP3714	700738762	235 Bu with Hydraulic Endgate, Manual Apron Drive	15,204.00
MFSP3710	700738786	175 Bu	10,671.00

TIRE AND WHEEL PACKAGE — **GROUP 02**

MSO16	700738801	16.5 x 16.1 Tires (For SP3717) Set of 2 In Lieu of Standard Tire	547.00

HYDRAULIC VARIABLE SPEED (SP3714 & SP3717) — **GROUP 02**

MSO13C	700209028	Hydraulic Variable Speed Kit for (2) Hose Hookup	1,429.00
MSO13B	700209029	Hydraulic Variable Speed Kit for (4) Hose Hookup	1,156.00

FIELD INSTALLED KITS - (order as desired) — **GROUP 99**

	700209034	Top Beater (For SP3710)	1,033.00
	700738770	Top Beater (For SP3714 / SP3717)	1,033.00
	700209036	Hydraulic Endgate including Cylinder (For SP3710)	1,516.00
	700738774	2nd Cylinder for Hydraulic Endgate (For SP3714 / SP3717)	440.00
	700209027	Rear Pan (For SP3710)	790.00
	700209035	Rear Pan (For SP3714 / SP3717)	790.00

MASSEY FERGUSON®

SPREADERS

FOB Marshfield, Wisconsin

PRODUCT INFORMATION

	HY3744	HY3730
Load Rating Capacity		
Bushel	550	425
Standard Tire Size	425 x 22.5	385 x 22.5
Standard PTO	1000	540

Order Code	Catalog Number	Description	Approx. Weight(lb)	List Price
ONE ITEM FROM EACH GROUP MUST BE SPECIFIED UNLESS NOTED OTHERWISE				
BASE MACHINE				**GROUP 01**
MFHY3744~MSHP550VB	700739753	550 BU Hydra Push with Vertical Beater		53,685.00
MFHY3744~MSHP550	700739752	550 BU Hydra Push with Horizontal Beater		42,851.00
MFHY3730~MSHP425VB	700739751	425 BU Hydra Push with Vertical Beater		43,092.00
MFHY3730~MSHP425	700739750	425 BU Hydra Push with Horizontal Beater		33,368.00
TIRE AND WHEEL PACKAGE				**GROUP 03**
MSO19L	700209042	19L x 16.1- 10 Ply Tire / Wheel Package . . . . . (For HY3730 only)		1,531.00

SPREADERS

FOB Marshfield, Wisconsin

PRODUCT INFORMATION

	VB3755	VB3744	VB3734	VB3726
Load Rating Capacity				
Gallons	4200	3400	2600	2000
Cu. Ft.	556	452	347	269
PTO	1000	1000	540	540

Order Code	Catalog Number	Description	Approx. Weight(lb)	List Price

ONE ITEM FROM EACH GROUP MUST BE SPECIFIED UNLESS NOTED OTHERWISE

BASE MACHINE — GROUP 01

MFVB3755	700739758	VB3755 Spreader*	57,810.00
MFVB3744	700739757	VB3744 Spreader*	48,794.00
MFVB3734	700739756	VB3734 Spreader*	38,153.00
MFVB3726	700739754	VB3726 Spreader*	34,985.00

***Less Wheel / Tire Package**

AXLES — GROUP 02

TSSA	700739772	Straight Axle to increase height (For VB3726)	No Charge
TSOTA	700739781	Heavier Optional Drop Style Axle (For VB3744)	4,137.00

PTO OPTION — GROUP 02

TSO1000RPM	700739761	1000RPM PTO (For VB3726 and VB3744)	1,010.00

TIRES AND WHEEL PACKAGE — GROUP 03

For VB3726

TWP165	700739775	16.5x16.1-10 Ply Wheel / Tire Package	2,835.00
TWP295	700739774	295Rx22.5 (Recap) Wheel / Tire (Tubeless) Package	1,482.00
TWP385	700739776	385x22.5 Wheel / Tire Package	1,606.00

For VB3734

TWP165	700739775	16.5x16.1-10 Ply Wheel / Tire Package	2,835.00
TWP19L	700739777	19Lx16.1-10 Ply Wheel / Tire Package	3,084.00
TWP425	700739778	425x22.5 Wheel / Tire Package	1,606.00

For VB3744

TWP49	700739782	49x19x20 - 30 Ply Wheel / Tire Package **(For use with Heavier Optional Drop Style Axle)**	5,619.00
TWP700	700739783	700/50x22.5 T/W Wheel / Tire Package. **(For use with Heavier Optional Drop Style Axle)**	9,401.00

For VB3755

TWP28L	700739785	28L - 26 16 Ply Wheel / Tire Package	10,356.00

MASSEY FERGUSON®

SPREADERS

FOB Marshfield, Wisconsin

Order Code	Catalog Number	Description	VB3755	VB3744	VB3734	VB3726 Approx. Weight(lb)	List Price

ONE ITEM FROM EACH GROUP MUST BE SPECIFIED UNLESS NOTED OTHERWISE

DIGI-STAR 5-POINT SCALE — GROUP 04

TSOS20	700739762	Digi-Star 5-Point Scale with GT400 Monitor (For VB3726)	4,483.00
TSOS26	700739764	Digi-Star 5-Point Scale with GT400 Monitor (For VB3734)	4,483.00
TSOS34	700739765	Digi-Star 5-Point Scale with GT400 Monitor (For VB3744)	5,931.00
TSOSTA34	700739766	Digi-Star 5-Point Scale with GT400 Monitor (For VB3744) . . . . **(For use with Heavier Optional Drop Style Axle)**	9,372.00

HYDRAULIC OPENING LID — GROUP 05

TSOLD34	700739784	Hydraulic opening lid to contain liquid fertilizer (For VB3744) . .	10,744.00
TSOLD42	700739786	Hydraulic opening lid to contain liquid fertilizer (For VB3755) . .	13,087.00

HESSTON by MASSEY FERGUSON

NON CURRENT

HESSTON by MASSEY FERGUSON

REAR / FRONT 3-POINT HITCH MOUNTED MOWER

PRODUCT INFORMATION

FOB Baltimore, MD

	DM1398 (Rear)	DM1398 (Rear) Tine Conditioner	DM1398 (Rear) Tine Conditioner with Mergers
Width of Cut	30' 6" (9.3m)	30' 6" (9.3m)	30' 6" (9.3m)
Number of Disc	2 x 7	2 x 7	2 x 7
Windrow Swath Width	2 x 8' 3" (2 x 2.5m)	2 x 6' 1" - 10' 8" (2 x 1.85 - 3.25m)	2 x 7' 3"-8' 3" (2 x 2.2-2.5m)
Weight	4675 (2,120kg)	6240 (2,830kg)	7055 (3,200kg)
Horsepower (minimum requirements) (with Front Mower)	175 HP	200 HP	228 HP
PTO (RPM)	1000 PTO RPM	1000 PTO RPM	1000 PTO RPM
Hitch	Rear 3pt- Cat II & III	Rear 3pt- Cat II & III	Rear 3pt- Cat II & III
Hydraulic Requirements	2 Single Acting, 1 Double Acting	2 Single Acting, 1 Double Acting	4 Single Acting, 1 Double Acting
Assembly Time	6 Hours	6 Hours	7 Hours

	DM1340 (Front)	DM1340 (Front) Tine Conditioner
Width of Cut	9' 10" (3.0m)	9' 10" (3.0m)
Number of Disc	6	6
Windrow Swath Width	6' 8" (2.0m)	4' 9" - 7' 3" (1.45 - 2.2m)
Weight	2051 (930kg)	2536 (1,150kg)
Horsepower (minimum requirements)	75 HP	95 HP
PTO (RPM)	1000 PTO RPM	1000 PTO RPM
Hitch	Front 3pt with PTO- Cat II	Front 3pt with PTO- Cat II
Hydraulic Requirements	1 Single Acting, 1 Double Acting	1 Single Acting, 1 Double Acting
Assembly Time	Assembled	Assembled

SUBJECT TO AVAILABILITY

NOTE: This is a general sales guide; for further product details and official specifications refer to product information guides and product literature.

DM1398 REAR MOWER

FOB Baltimore, MD

STANDARD EQUIPMENT

Working Width: 30' 6" (9.3m)
Swath width: 2 x 8' 3" (2 x 2.5m) (no conditioner)
2 x (6' 1" to 10' 8") (2 x 1.85m to 3.25m) (tine conditioner)
Transport Width: 9' 1" (2.8m)
Transport Height: 12'10" (3.9m)
2 x 7 Disc
1000 RPM PTO
1 3/8" 21 Spline PTO yoke
Hitch Category: II and III
Turbo Lift Hydraulic Mower Flotation
Compact Modular Angle Cutterbar
Safety Swing Break-away Protection
Main Drives: Gearboxes and drive shafts
Overrunning Clutch
Drive GUARD Individual Disc Protection

Tractor Requirements (with Front Mower):
175 HP (no conditioner)
200 HP (tine conditioner)
228 HP (tine conditioner with Mergers)
Load Sensing Hydraulics or 2 SAV, 1 DAV for Rear Mower
Plus 1 DAV and 1 SAV for Front Mower

Order Code	Catalog Number	Description	Approx. Weight(lb)	List Price

ONE ITEM FROM EACH GROUP MUST BE SPECIFIED UNLESS NOTED OTHERWISE
Must Be Ordered with a DM1340 FRONT MOWER

BASE MACHINE			**GROUP 01**
DM1398	700963253	Rear 3-Point Hitch Mounted Mower w/ Tine Conditioner w/ Mergers . . .	78,671.00
DM1398	71440197	Rear 3-Point Hitch Mounted Mower with Tine Conditioner	56,419.00
DM1398	71445568	Rear 3-Point Hitch Mounted Mower without Tine Conditioner	43,310.00

FACTORY INSTALLED VALVE OPTIONS - (must choose one)			**GROUP 02**
	700960863	Electromagnetic 2/2 Way Valve ⊙	803.00
	71436149M	Electro-Hydraulic Load Sensing Control . . . . . Required for tractors with less than 5 DAV	3,715.00

FACTORY INSTALLED OPTION			**GROUP 03**
	71445569	Protective Cover ◆	1,202.00

FIELD INSTALLED KITS - (order as desired)			**GROUP 99**
	700960874	Additional Skid (Increases cutting height to 2.2" to 3.1" . . . . . depending on spacers used- order at least 2 per cutterbar)	90.00
	71440199	PTO Yoke 1 3/4" (20 Spline)	232.00
	700963259	Filler Pan between Belt and Conditioner (Merger units only)	647.00
	700963260	Mower Disc with Conveyor Wings (Aggressive rotor for improved . . . . . feeding in heavy crop- order 2 per cutterbar to replace outside disc) *Non-merger units only	88.00
	700963266	Crowned Drum Hat Kit . . . . . (For improved feeding in heavy crop- order 1 kit per cutterbar)	32.00

SUBJECT TO AVAILABILITY

*Protective Curtain must be ordered from parts when the tine conditioner is removed.

⊙For combined lifting of the Rear Mowers with 1 DAV
◆For use on the tine conditioner models while operating with conditioner removed

HESSTON by MASSEY FERGUSON

DM1340 FRONT MOWER

FOB Baltimore, MD

STANDARD EQUIPMENT

Working Width: 9'10" (3.0m)
Swath Width: 6' 8" (2m) (no conditioner)
4' 9" to 7' 3" (1.5m to 2.2m) (tine conditioner)
Transport Width: 9'10" (3.0m)
Transport Length: 6' 2" (1.9m)
6 Disc
1000 RPM PTO
1 3/8" 21 Spline PTO yoke
Reversible Gearbox (CW or CCW)
Overrunning Clutch
Trailing Linkage Spring Flotation
Compact Modular Angle Cutterbar
Adjustable Cutting Height: 1.5" to 2.8" (0m to .1m)
Hydraulic Side Shift: 10" (.3m) right and left
Header Lift: Hydraulic Cylinder
Header Lift Height: 17" (.4m)
Header Suspension Travel: 22" (.6m)
Lateral Tilt: 26.4 Degrees
Drive GUARD Individual Disc Protection

Tractor Requirements:
75 HP (no conditioner)
90 HP (tine conditioner)
1 DAV, 1 SAV
Front 3-Point Hitch
Front 1000 RPM PTO
1 3/8" 21 Spline PTO

Order Code	Catalog Number	Description	Approx. Weight(lb)	List Price

ONE ITEM FROM EACH GROUP MUST BE SPECIFIED UNLESS NOTED OTHERWISE

BASE MACHINE — **GROUP 01**

DM1340*	71440196	Front 3-Point Hitch Mounted Mower with Tine Conditioner	23,950.00
DM1340*	71445567	Front 3-Point Hitch Mounted Mower without Tine Conditioner	18,273.00

FACTORY INSTALLED — **GROUP 02**

	71445570	Protective Cover◆	564.00

FIELD INSTALLED KITS - (order as desired) — **GROUP 99**

	700960874	Additional Skid (Increases cutting height to 2.2" to 3.1" . . . . . depending on spacers used- order at least 2 per cutterbar)	90.00
	700963267	Swath Former (For Operation without Conditioner)	163.00
	700963260	Mower Disc with Conveyor Wings (Aggressive rotor for improved . . . . . feeding in heavy crop- order 2 per cutterbar to replace outside disc) *Non-merger units only	88.00
	700963266	Crowned Drum Hat Kit . . . . . (For improved feeding in heavy crop- order 1 kit per cutterbar)	32.00

◆ For use on the tine conditioner models while operating with conditioner removed.

SUBJECT TO AVAILABILITY

***Note: DM1340 can be ordered separately or used in conjunction with the DM1398 Rear Mower or a pull type Disc Mower Conditioner.**

HESSTON by MASSEY FERGUSON

DISC MOWERS
PRODUCT INFORMATION
FOB Baltimore, MD

Professional Series
(MUST ORDER IN PAIRS OF 2 OF ANY COMBINATION)

	DM1362	DM1361	DM1358
Width of Cut	11' 6" (3.5m)	9' 10" (3.0m)	8' 4" (2.55m)
Number of Discs	7	6	5
Swath Width:			
No Conditioner	7' 7" (2.3m)	5' 11" (1.8m)	5' 3" (1.6m)
Tine Conditioner	N/A	2' 11"- 6' 3"(1.35-1.9m)	2' 11"- 4' 7" (0.9-1.4m)
Roller Conditioner	N/A	N/A	3' 5" - 4' 7" (1.05- 1.4m)
Minimum HP Requirement			
No Conditioner	68 HP	61 HP	54 HP
With Conditioner	N/A	86 HP	75 HP
PTO (RPM)	540 RPM	540 RPM	540 RPM
Hitch	3 pt- Cat I & II	3 pt- Cat I & II	3 pt- Cat I & II
Weight:			
No Conditioner	1760 (798kg)	1596 (724kg)	1389 (630kg)
Tine Conditioner	N/A	2229 (1,011kg)	1947 (883kg)
Roller Conditioner	N/A	N/A	2161 (980kg)
Assembly Time	2.5 Hours	2.5 Hours	2.5 Hours

Farmer Series
(MUST ORDER IN PAIRS OF 2 OF ANY COMBINATION)

	DM1309	DM1308	DM1306	DM1305
Width of Cut	9'3" (2.82m)	7'11" (2.42m)	6'9" (2.06m)	5'5" (1.66m)
Number of Discs	7	6	5	4
Swath Width:				
No Conditioner	6' 7" (2.0m)	5' 5" (1.65m)	4' 1" (1.25m)	2' 11"' (0.9m)
Minimum HP Requirement				
No Conditioner	60 HP	50 HP	41 HP	30 HP
PTO (RPM)	540 RPM	540 RPM	540 RPM	540 RPM
Hitch	3 pt- Cat I & II	3 pt- Cat I & II	3 pt- Cat I & II	3 pt- Cat I & II
Weight:				
No Conditioner	1047 (475kg)	964 (437kg)	897 (407kg)	820 (372kg)
Assembly Time	4 Hours	4 Hours	4 Hours	4 Hours

SUBJECT TO AVAILABILITY

NOTE: This is a general sales guide; for further product details and official specifications refer to product information guides and product literature.

Note: These Mowers Are Intended For Agricultural Use Only. They are Not Intended For Roadside Or Municipal Mowing

HESSTON by MASSEY FERGUSON

DM1362 / DM1361 / DM1358

PROFESSIONAL SERIES DISC MOWERS
(MUST ORDER IN PAIRS OF 2 OF ANY COMBINATION)

FOB Baltimore, MD

STANDARD EQUIPMENT

Compact Modular Angle Gear Cutterbar
Spring-Loaded Anti-Collision Device
Cutterbar Drive Protection
Common Oil Reservoir
Lifetime Cutterbar Oil
PTO Shaft with Overrunning Clutch
Heavy Duty Skid Plate
Heavy Duty Main Frame
Hydraulic Lift Cylinder
Swath Disc Right
Outer Swathboard
Drive GUARD Cutterbar Protection

Note: These Mowers Are Intended For Agricultural Use Only. They are Not Intended For Roadside Or Municipal Mowing

Order Code	Catalog Number	Description	Approx. Weight(lb)	List Price
ONE ITEM FROM EACH GROUP MUST BE SPECIFIED UNLESS NOTED OTHERWISE				
BASE MACHINE				**GROUP 01**
MFDM1362	700960861	Disc Mower with 7 Disc and 11'6" (3.5m) Cut		15,254.00
MFDM1361	700960860	Disc Mower with 6 Disc and 9'10" (2.8m) Cut		12,703.00
MFDM1358	700960859	Disc Mower with 5 Disc and 8'4" (2.6m) Cut		11,645.00
FIELD INSTALLED KITS - (order as desired)				**GROUP 99**
	700960871	Swath Disc (left) for DM1358, DM1361		290.00
	700960873	Swath Guide (left) for DM1362		445.00
	700960874	Adjustable High Skid (qty 5) for DM1358 Adjustable High Skid (qty 6) for DM1361 Adjustable High Skid (qty 7) for DM1362		90.00
	700960875	Tine Conditioner for DM1358		5,642.00
	700960877	Roller Conditioner for DM1358		7,354.00
	700960876	Tine Conditioner for DM1361		6,870.00
	700960878	Spreader Device for DM1358		307.00
	700960879	Spreader Device for DM1361		401.00
	700960881	Stone Guard for DM1362		228.00
ORDER FROM PARTS				
	FEL428929	Quick Hitch Adapter Kit (Cat II)		ORDER FROM PARTS

SUBJECT TO AVAILABILITY

(IMPORTANT NOTE: Must order in pairs of 2 of any Combination)

HESSTON by MASSEY FERGUSON

DM1309 / DM1308 / DM1306 / DM1305

FARMER SERIES DISC MOWERS
(MUST ORDER IN PAIRS OF 2 OF ANY COMBINATION)

FOB Baltimore, MD

STANDARD EQUIPMENT

Spur Gear Cutterbar
Spring-Loaded Anti-Collision Device
Folding Curtains
Parking Stand
Hydraulic Lift Cylinder
PTO Shaft with Overrunning Clutch
Swath Disc Right
Cat I and II Hitch
Cutterbar Drive Protection
Common Oil Bath
Solid Frame with Exterior Support
Outer Swathboard

Note: These Mowers Are Intended For Agricultural Use Only. They are Not Intended For Roadside Or Municipal Mowing

Order Code	Catalog Number	Description	Approx. Weight(lb)	List Price

ONE ITEM FROM EACH GROUP MUST BE SPECIFIED UNLESS NOTED OTHERWISE

BASE MACHINE — **GROUP 01**

MFDM1309	700960858	Disc Mower with 7 Disc and 9'3" (2.8m) Cut	1047	10,210.00
MFDM1308	700960857	Disc Mower with 6 Disc and 7'11" (2.2m) Cut	963	9,104.00
MFDM1306	700960855	Disc Mower with 5 Disc and 6'9" (2.1m) Cut	897	8,114.00
MFDM1305	700960854	Disc Mower with 4 Disc and 5'5" (1.7m) Cut	820	6,826.00

FIELD INSTALLED — **GROUP 02**

700960868	Swath Guide (left) for DM1305, DM1306, DM1308	618.00
700960869	Swath Guide (left) for DM1309	750.00
700960870*	Welded-on Skid (Quantity of one per Disc is Required for Rocky Conditions)	35.00

ORDER FROM PARTS

FEL428928	Quick Hitch Adapter Kit (Cat II - Cat III NARROW)	ORDER FROM PARTS
FEL134764 FEL134765 FEL134768	High Cutting Skid. (Increases cut height by 2")	ORDER FROM PARTS

(IMPORTANT NOTE: Must order in pairs of 2 of any Combination)

SUBJECT TO AVAILABILITY

HESSTON by MASSEY FERGUSON

ROTARY RAKES
PRODUCT INFORMATION

FOB Baltimore, Maryland

	RK3835	RK3845	RK3814	RK3814H	RK3802
Working Width: Single Windrow 2 Windrows	20’ 8" (6.3m) 23’ (7.0m)	18’ 10" (5.75m) 21' 10" (6.65m)	14’ 9" (4.5m)	14’ 9" (4.5m)	11' 10" (3.6m)
Swath Width	2' - 6' 3" (0.6-1.9m)	2' - 6' 3" (0.6-1.9m)	2'6" - 5'3" (0.76- 1.6m)	2'6" - 5'3" (0.76- 1.6m)	2’ - 4’ 11" (0.6- 1.5m)
Horsepower Min.	45	26	41	41	27
Transport Width (Without Tine Arms In)	7’ 7"/ 9’ 10" (2.3/ 3.0m)	9’ 9" (2.97m)	6’ 11" (2.1m)	6’ 6" (1.99m)	5’ 1" (2.1m)
Transport Length	27’ 9" (8.45m)	21’ 9" (6.65m)	13’ 5" (4.1m)	8’ 10" (2.68m)	7’ 3" (2.21m)
Transport Height (Dismounted Tine Arms)	9’ 2" (2.8m)	9’ 10"/ 11’ 10" (3.0/3.6m)	N/A	N/A	N/A
Hitch	Drawbar	3 pt- Cat I & II	Drawbar	3 pt- Cat I & II	3 pt- Cat I & II
Rotor Delivery	Right Side Delivery	Right Side Delivery or Center & Right Delivery	Right Side Delivery	Right Side Delivery	Right Side Delivery
Number of Rotors Tine Arms per Rotor	2 12 on each	2 10 and 12	1 12	1 12	1 10
Tractor Hydraulics	1 Single Acting 1 Double Acting	1 Single Acting	1 Single Acting	None	None
Standard Equipment:	Tandem Axle	Tandem axle 16/6.50-8		PTO shaft with Overrunning Clutch	PTO shaft with Overrunning Clutch Tandem axle 16/6.50-8
Assembly Time	6 Hours	8 Hours	1.5 Hours	1.5 Hours	1 Hour

STANDARD EQUIPMENT
Three Position Swath Curtain
Parking Stand
Safety Guards and SMV Sign
Transport Safety Chain
Electrical Lighting

Tractor Requirements:
Tractor with 540 PTO
Rollover Protective Structure (ROPS) and seat belt
Recommended to run in float position

Order Code	Catalog Number	Description	Approx. Weight(lb)	List Price

ONE ITEM FROM EACH GROUP MUST BE SPECIFIED UNLESS NOTED OTHERWISE

BASE MACHINE — **GROUP 01**

MFRK3835	700963251	RK3835 Pull Type Rotary Rake with Drawbar		29,567.00
MFRK3845	700960853	RK3845 3-Point Rotary Rake with 3 pt- Cat I & II		27,097.00
MFRK3814	71445566	RK3814 Pull Type Rotary Rake with Drawbar	1190	11,179.00
MFRK3814H	700963250	RK3814H 3-Point Rotary Rake with 3 pt- Cat I & II		13,975.00
MFRK3802	700960852	RK3802 3-Point Rotary Rake with 3 pt- Cat I & II		7,963.00

FIELD INSTALLED KITS - (order as desired) — **GROUP 99**

	700960862	Spare Wheel16/6.50-8 w/ support . . . . . (RK3802, RK3814, RK3835, RK3845)	185.00
	71437768	Front Rotor Swath Former for 2 Swath Delivery for RK3845 . . .	737.00
	700963254	Spare Wheel 18/8.50-8 with support (RK3835)	252.00
	700963257	Hydraulic Operation for Rear Swath Former (RK3835)	497.00

SUBJECT TO AVAILABILITY

HESSTON by MASSEY FERGUSON

ROTARY RAKES
PRODUCT INFORMATION

FOB Baltimore, Maryland

	RK3891	RK3879 PRO	RK3855
Working Width: Single Windrow	41' (12.5m)	23' 7" (7.2m) to 26' 3" (8.0m)	21' 8" (6.6m)
2 Windrows			25' 3" (7.7m)
Swath Width	3' 11"- 7' 3" (1.2-2.0m)	3' 11"- 6' 7" (1.2 - 2.2m)	2' - 6' 3" (0.6 - 1.9m)
Horsepower Min.	80	48	41
Transport Width (Without Tine Arms In)	9' 10" (3.0m)	9' 9" (2.98m)	9' 10" (3.0m)
Transport Length	27' 11" (8.5m)	17' 7" (5.35m)	24' 5" (7.45m)
Transport Height (Dismounted Tine Arms)	12' (3.65m)	11' 10' (4.5m)	12' (3.65m)
Hitch	Drawbar	3 pt- Cat I & II	3 pt- Cat I & II
Rotor Delivery	Center Delivery	Center Delivery	Right Side Delivery or Center & Right Delivery
Number of Rotors	4	2	2
Tine Arms per Rotor	12 on each	12 on each	12 on each
Tractor Hydraulics	2 Single Acting	1 Single Acting	1 Single Acting
Standard Equipment:	Tandem Axle	Tandem axle 18/8.50-8 Wheel 11.5/80-15.3	Tandem axle 16/6.50-8 Wheel 11.5/80-15.3
Assembly Time	18 Hours	8 Hours	8 Hours

STANDARD EQUIPMENT
Three Position Swath Curtain
Transport Chassis
Parking Stand
Safety Guards and SMV Sign
Transport Safety Chain
Electrical Lighting
Tandem Axles on Rotor Chassis

Tractor Requirements:
Tractor with 540 PTO
Rollover Protective Structure (ROPS) and seat belt
Recommended to run in float position

Order Code	Catalog Number	Description	Approx. Weight(lb)	List Price
ONE ITEM FROM EACH GROUP MUST BE SPECIFIED UNLESS NOTED OTHERWISE				
BASE MACHINE				**GROUP 01**
MFRK3891	700963278	RK3891 Mounted Rotary Rake		96,287.00
MFRK3879P	71427755	RK3879 Pro Mounted Rotary Rake	4409	32,733.00
MFRK3855	71427756	RK3855 Mounted Rotary Rake	4629	32,683.00
FIELD INSTALLED KITS - (order as desired)				**GROUP 99**
	700960862	Spare Wheel 16/6.50-8 with support for RK3855, RK3891		185.00
	71437768	Front Rotor Swath Former for 2 Swath Delivery (RK3855 only).		737.00
	700960866	Individual Lifting Device for RK3879		385.00
	700960867	Spare Wheel 18/8.50-8 for RK3879		294.00
	700963258	Electro Hydraulic Single Lift for RK3891		2,190.00
	700963705	Front Wheel Kit 2x16/6.50-8 for RK3879		544.00

SUBJECT TO AVAILABILITY

HESSTON by MASSEY FERGUSON

PULL-TYPE TEDDERS

PRODUCT INFORMATION

FOB Baltimore, Maryland

	TD1665	TD1663	TD1661	TD1655	TD1658 Subject to Availability
Tedding Width	41' 8" (12.7m)	41' 8" (12.7m)	33' 6" (10.2m)	33' 6" (10.2m)	25' 3" (7.7m)
Transport Width	9' 8" (2.94m)	9' 2" (2.78m)	9' 2" (2.78m)	9' 8" (2.94m)	9' 2" (2.78m)
Transport Length	18' 8" (5.7m)	26' 6" (8.07m)	22' 5" (6.83m)	18' 8" (5.7m)	18' 2" (5.5m)
Transport Height	8' 5" (2.56m)	N/A	N/A	8' 5" (2.56m)	N/A
Rotors	10	10	8	8	6
Arms / Rotors	6	6	6	6	6
Wheels:					
16 / 6.50-8	8	8	8	6	4
18 / 8.50-8	2			2	2
Horsepower (min. PTO)	90 HP	61 HP	48 HP	54 HP	41 HP
Hitch	Drawbar	Drawbar	Drawbar	Drawbar	Drawbar
Transport	Transport Chassis	Hydraulic Horizontal Rear Fold	Hydraulic Horizontal Rear Fold	Transport Chassis	Hydraulic Horizontal Rear Fold
Hydraulic Requirements	1 Single Acting	1 Single Acting	1 Single Acting	1 Single Acting 1 Double Acting	1 Single Acting
Assembly Time	5 Hours	6.5 Hours	6 Hours	5 Hours	5 Hours

STANDARD EQUIPMENT

540 RPM PTO
Parking Jack (Pull Type Hitch)
Safety Chain (Pull Type Units)
SMV Sign
Drive Protection Clutch
Galvanized Tine Arms
Super C Tines
Tine Saver
Wide Angle PTO Shaft for TD776T
Tractor Requirements:
One Single Acting Hydraulic Remote (2DAV for TD1008 and TD1665) Tractor with 540 PTO

Order Code	Catalog Number	Description	Approx. Weight(lb)	List Price
ONE ITEM FROM EACH GROUP MUST BE SPECIFIED UNLESS NOTED OTHERWISE				
MFTD1665	700960851	10 Rotor, 41' (12.7m), Drawbar, Transport Chassis Tedder.		36,016.00
MFTD1663	700963249	10 Rotor, 41' (12.7m), Drawbar, Hydraulic Horizontal Rear Fold Tedder .		35,509.00
MFTD1661	700963248	8 Rotor, 33' (10.2m), Drawbar, Hydraulic Horizontal Rear Fold Tedder . .		27,555.00
MFTD1655	700960850	8 Rotor, 33' (10.2m), Drawbar, Transport Chassis Tedder.		30,490.00
MFTD1658	71427753	6 Rotor, 25' (7.7m), Drawbar, Transport Chassis Tedder.		17,480.00
		SUBJECT TO AVAILABILITY		
FACTORY INSTALLED				**GROUP 02**
	700960862	Spare Wheel 16/6.50-8 with support (TD1661 and TD1663)		185.00
	700960865	Electromagnetic 2/2 Valve-to operate machine with only 1-DAV . . . . . for TD1655, TD1665		707.00

SUBJECT TO AVAILABILITY

PULL-TYPE TEDDERS

PRODUCT INFORMATION

FOB Baltimore, Maryland

	TD1638	TD1648	TD1636	TD1635	TD1635H	TD1620
Tedding Width	25' 3" (7.7m)	25' 3" (7.7m)	21' 8" (6.6m)	17' 1" (5.2m)	17' 1" (5.2m)	8' 2" (2.5m)
Transport Width	9' 10" (3.0m)	9' 10" (3.0m)	9' 6" (2.9m)	9' 10" (3.0m)	9' 10" (3.0m)	9' 10" (3.0m)
Transport Length	8' (2.45m)	14' 8" (4.48m)	6' 11" (2.1m)	10' 2" (3.1m)	7' 5" (2.25m)	10' 2" (3.1m)
Transport Height	12' (3.65m)	9' 6" (2.9m)	10' 10" (3.3m)	8' 6" (2.6m)	8' 6" (2.6m)	N/A
Rotors	6	6	6	4	4	2
Arms / Rotors	6	6	6	6	6	6
Wheels:						
16 / 6.50-6						2
16 / 6.50-8	6	4	6	4	4	
18 / 8.50-8		2				
Horsepower (min. PTO)	82 HP	41 HP	41 HP	30 HP	30 HP	20 HP
Hitch	3 pt- Cat I & II	Drawbar	3 pt- Cat I & II	Drawbar	3 pt- Cat I & II	Drawbar
Transport	Vertical Fold	Transport Chassis	Hydraulic Vertical Fold	Hydraulic Vertical Fold	Hydraulic Vertical Fold	None
Hydraulic Requirements	1 Single Acting	1 Single Acting	1 Single Acting	1 Single Acting	1 Single Acting	None
Assembly Time	4 Hours	4 Hours	3 Hours	2.5 Hours	2.5 Hours	2.5 Hours

STANDARD EQUIPMENT

540 RPM PTO
Parking Jack (Pull Type Hitch)
Safety Chain (Pull Type Units)
SMV Sign
Drive Protection Clutch
Galvanized Tine Arms
Super C Tines
Tine Saver
Wide Angle PTO Shaft for TD776T

Tractor Requirements:
One Single Acting Hydraulic Remote Tractor with 540 PTO

Order Code	Catalog Number	Description	Approx. Weight(lb)	List Price

ONE ITEM FROM EACH GROUP MUST BE SPECIFIED UNLESS NOTED OTHERWISE

Note: TD1620 must be ordered and shipped in multiples of 2.

BASE MACHINE **GROUP 01**

MFTD1638	700963247	6 Rotor, 25' (7.7m), 3 pt-Cat I&II, Hydraulic Vertical Fold Tedder		18,519.00
MFTD1648	71427752	6 Rotor, 25' (7.7m), Drawbar, Transport Chassis Tedder.		20,360.00
MFTD1636	700963246	6 Rotor, 21' (6.6m), 3 pt-Cat I&II, Hydraulic Vertical Fold Tedder		16,726.00
MFTD1635	71427751	4 Rotor, 17' (5.2m), Drawbar, Hydraulic Vertical Fold, Tedder	1223	9,822.00
MFTD1635H	700963245	4 Rotor, 17' (5.2m), 3 pt-Cat I&II, Hydraulic Vertical Fold Tedder		9,822.00
MFTD1620	71436146	2 Rotor, 8' (2.5m), Drawbar, Tedder	513	3,501.00

FACTORY INSTALLED **GROUP 02**

	700960862	Spare Wheel 16/6.50-8 with support (TD1635, TD1636, TD1638).	185.00

SUBJECT TO AVAILABILITY

MASSEY FERGUSON®

KITS FOR NON-CURRENT MODELS

These kits are subject to availability through wholegoods.

Catalog Number	Description	Approx. Weight(lb)	List Price
LARGE SQUARE BALERS			
700957661M	Roller Bale Chute for 2150		2,234.00
ROUND BALERS			
MKD51181	Power Harness Kit for 1745		69.00
M**OWERS**			
MK61016	Gauge Wheel for 14' for 9126 / 9146		1,587.00
MK60562	Gauge Wheel Kit for 16' and 18' for 9146 / 9126		1,172.00
MK60575	Heavy Crop Spider Reel for 14' and 16' for 9126		238.00
MK60938	Heavy Crop Spider Reel for 18' for 9126		319.00

Referral Attachments

As the large square baler and round baler markets expand in North America, your customers continue to explore more efficient methods to handle their bales. The equipment manufacturer below offers cost effective, reliable, and durable equipment to complement AGCO's haytool business.

AGCO does not represent these products or company or offer terms or warranty. When installed and operated according to the manufacture's instructions, these attachments will not void AGCO warranty of the AGCO new products. The availability, performance, service parts availability, pricing after sale service and warranty of these products is the sole responsibility of the manufacturer and not of AGCO. Some products will not be available in all markets of the United States or of Canada.

Self-Propelled & Pull-Type Large Square Bale Wagons & Stackers
Mil-Stak Large Bale Stackers

2201 Hwy 30 West
Fruitland, Idaho 83619
Phone: 208-452-6045
Email: **info@milstak.com**
http://www.milstak.com

TILLAGE

Chapter - Page

1000 Series Discs

1000 - Assembly Charges 1000-1
1212 - Single Section Tandem Disc 1000-3
1234 - Three Section Flexible Tandem Disc 1000-6
1321 - Flexible Offset Disc. 1000-12
1436 - Three Section and Split-Wing Flexible Tandem Disc 1000-17
1444 - Four Section Flexible Tandem Disc 1000-27
1544 - Four Section Flexible Tandem Disc 1000-37
1550 - Five Section Flexible Disc 1000-42
1710 - Single Section H.D. Offset Disc 1000-44
1730 - Three Section Flexible H.D. Offset Disc 1000-44
1710HD - Single Section (Super H.D.) Offset Disc 1000-49
1810 - Single Section H.D. Tandem Disc 1000-50
1830 - Three Section Flexible H.D. Tandem Disc 1000-50

2000 Series Chisels

2000 - Assembly Charges 2000-1
2510 - Three Section Flexible Chisel Plow 2000-2
2530 - Three Section Flexible Chisel Plow 2000-2

3000 Series Fallow Tillage

3000 - Assembly Charges 3000-1
3000 - Fallow King 3000-2
3300 - Sunflower/ Flex-King Blade Plow 3000-5
3600 - Sunflower / Richardson Blade Plow 3000-9

4000 Series Tillage Tools

4000 - Assembly Charges 4000-1
4213 - Single Section Coulter Chisel 4000-3
4233 - Three Section Flexible Coulter Chisel 4000-8
4412 - Disc Ripper 4000-13
4511 - Single Section Disc Chisel 4000-16
4530 - Three Section Flexible Disc Chisel. 4000-16
4610 - Single Section Disc Ripper 4000-20
4630 - Three Section Disc Ripper 4000-20
4700 - In Line Ripper 4000-24

5000 Series Field Cultivators

5000 - Assembly Charges 5000-1
5035 - Three Section Field Cultivator 5000-2
5135 - Three Section Split Wing Field Cultivator 5000-2
5056 - Five Section Field Cultivator 5000-10

6000 Series Land Finishers

6000 - Assembly Charges 6000-1
6000 - Land Finisher. 6000-2
6610 - Vertical Tillage Tool 6000-12
6630 - Vertical Tillage Tool (Subject to Availability) 6000-15
6631 - Three Section and Split-Wing Vertical Tillage Tool 6000-18
6650 - Five Section Vertical Tillage Tool 6000-24
6830 - Rotary Finisher 6000-26

Chapter - Page

7000 Series Soil Conditioning and Strip-Till Tools

7000 - Assembly Charges and Freight Charges 7000-1
7200 - Soil Conditioner 7000-2
7600 - Strip-Till Tillage Tools 7000-7

8000 Series Dump Wagon

8000 - Assembly Charges 8000-1
8210 - Richardton Dump Wagon 8000-2

9000 Drills

9000 - Assembly Charges 9000-1
9312 - Pull Type End Wheel Grain Drill 9000-2
9412 - 3-Point Grain Drill 9000-5
9413 - 3-Point Grain Drill 9000-8
9510 - Fertilizer Grain Drill 9000-11
9421 - Two Section Folding Grain Drill 9000-14
9435 - Three Section Folding Grain Drill 9000-17
9531 - Three Section Folding Fertilizer Grain Drill 9000-20
9610 - Min-Till 3 Point Grain Drill 9000-23
9730 - Three Section Flexible Air-Till (Shank) Drill 9000-26
9750 - Five Section Flexible Air-Till (Shank) Drill 9000-26
9830NT Three Section Single Disc Drill 9000-31
9830 - Three Section Flexible Single Disc Air Drill 9000-33
9850 - Five Section Flexible Single Disc Air Drill 9000-33
9920 - 2 Compartment Air Cart 9000-43
9930 - 2 Compartment Air Cart 9000-43

F.O.B. Point

Product	F.O.B. Point of Manufacture
1212 - Single Section Tandem Disc	Beloit, KS
1234 - Three Section Tandem Disc	Beloit, KS
1321 - Flexible Offset Disc	Beloit, KS
1436 - Three Section and Split-Wing Flexible Tandem Disc	Beloit, KS
1444 / 1544 - Four Section Flexible Tandem Disc	Beloit, KS
1550 - Five Section Flexible Disc	Beloit, KS
1710 / 1730 - One Section Non-Folding Offset Disc	Wahpeton, ND
1710HD - One Section Heavy Duty Non-Folding Offset Disc	Wahpeton, ND
1810 - One Section Non-Folding Tandem Disc	Wahpeton, ND
1830 - One Section Non-Folding Tandem Disc	Wahpeton, ND
2500 - Three Section Flexible Chisel Plow	Wahpeton, ND
3000 - Fallow King	Beloit, KS
3300 - Sunflower Blade Plow	Beloit, KS
3600 - Sunflower / Richardson Blade Plow	Beloit, KS
4213 - Rigid Coulter Chisel	Beloit, KS
4233 - Three Section Flexible Coulter Chisel	Beloit, KS
4412 - Disc Ripper	Beloit, KS
4511 / 4530 - Disc Chisel	Beloit, KS
4610 - One Section Disc Ripper	Wahpeton, ND
4630 - Three Section Disc Ripper	Wahpeton, ND
4700 - In Line Ripper	Wahpeton, ND
5035 / 5135 - Three Section Field Cultivator	Beloit, KS
5056 - Five Section Field Cultivator	Beloit, KS
6000 - Land Finisher	Beloit, KS
6630 / 6631 / 6650 - Vertical Tillage Tool	Beloit, KS
6830 - Rotary Finisher	Beloit, KS
7200 - Soil Conditioner	Beloit, KS
7600 - Strip-Till Tool	Beloit, KS
8010/8020 - Richardton Dump Wagon	New Hampton, IA
8210 - Richardton Dump Wagon	New Hampton, IA
9007/9010 Sunflower Grain Drill	Beloit, KS
9312 - Pull Type End Wheel Grain Drill	Beloit, KS
9412 - 3-Point Grain Drill	Beloit, KS
9413 - 3-Point Grain Drill	Beloit, KS
9510 - Fertilizer Grain Drill	Beloit, KS
9421 - Two Section Folding Grain Drill	Beloit, KS
9435 - Three Section Folding Grain Drill	Beloit, KS
9531 - Three Section Folding Fertilizer Grain Drill	Beloit, KS
9610 - Min-Till 3 Point Grain Drill	Beloit, KS
9700 - Air-Till Drill	Wahpeton, ND
9800 / 9830NT - Single Disc Air Drill	Wahpeton, ND
9900 - Air Cart	Fargo, ND

FACTORY OR DEALERSHIP ASSEMBLY AMOUNTS ON 1000 SERIES
(DISCOUNTS DO NOT APPLY)

The factory or dealership set-up amounts will be charged for machines set-up by Sunflower. Set-up amounts are the same whether machines are shipped via our truck (gangs off wings, etc.) or set-up completely and picked up by dealer's truck. Factory assembly charge includes hydraulic hose, hydraulic oil, and tips (hydraulic system is charged). Dealer location assembly charge includes hydraulic hose, and tips. (Hydraulic oil is not included) See note below.

MODEL NUMBER	FACTORY ORDER CODE	FACTORY SET-UP RATE	DEALER LOCATION ORDER CODE	DEALER LOCATION SET-UP RATE
SF1212-10	SET0001S	**738.00**	SET0001DS	**773.00**
SF1212-12	SET0002S	**796.00**	SET0002DS	**834.00**
SF1212-13	SET0003S	**873.00**	SET0003DS	**914.00**
SF1212-15	SET0004S	**928.00**	SET0004DS	**972.00**
SF1234-18	SET0005S	**1,232.00**	SET0005DS	**1290.00**
SF1234-21 (NC)	SET0006S	**1,327.00**	SET0006DS	**1390.00**
SF1234-21 (WC)	SET0007S	**1,327.00**	SET0007DS	**1390.00**
SF1234-24 (NC)	SET0008S	**1,470.00**	SET0008DS	**1540.00**
SF1234-24 (WC)	SET0009S	**1,470.00**	SET0009DS	**1540.00**
SF1234-27	SET0010S	**1,660.00**	SET0010DS	**1739.00**
SF1234-29 ♦	SET0011S	**1,800.00**	SET0011DS	**1885.00**
SF1234-32 ♦	SET0012S	**1,961.00**	SET0012DS	**2055.00**
SF1321-14	SET0014S	**873.00**	SET0014DS	**914.00**
SF1321-16	SET0015S	**909.00**	SET0015DS	**953.00**
SF1321-18	SET0016S	**1,318.00**	SET0016DS	**1381.00**
SF1436-21	SET0018S	**1,137.00**	SET0018DS	**1191.00**
SF1436-24	SET0019S	**1,232.00**	SET0019DS	**1290.00**
SF1436-27	SET0020S	**1,327.00**	SET0020DS	**1390.00**
SF1436-29	SET0021S	**1,365.00**	SET0021DS	**1430.00**
SF1436-31♦	SET0022S	**1,527.00**	SET0022DS	**1599.00**
SF1436-33♦	SET0023S	**1,649.00**	SET0023DS	**1727.00**
SF1436-36♦	SET0024S	**1,800.00**	SET0024DS	**1885.00**
Hydraulic (Lift, Self Leveler or Fold Kit) Add For SF1212, SF1321, SF1436	SET0031S	**47.00**	SET0031DS	**50.00**
SF1444-30	SET0025S	**1,933.00**	SET0025DS	**2025.00**
SF1444-33 ♦	SET0026S	**2,038.00**	SET0026DS	**2135.00**
SF1444-36 / SF1436-33 ♦	SET0027S	**2,141.00**	SET0027DS	**2243.00**
SF1444-40 / SF1436-38 ♦	SET0028S	**2,245.00**	SET0028DS	**2352.00**
SF1544-42	SET0029S	**2,266.00**	SET0029DS	**2374.00**
SF1544-45	SET0030S	**2,435.00**	SET0030DS	**2551.00**
SF1550-46 / SF1550-48♦	SET0218S	**4,249.00**	SET0218DS	**4452.00**
Hydraulic Self Leveler, add SF1435 / SF1444 & SF1544	SET0032S	**93.00**	SET0032DS	**98.00**
Coil Tine Harrow	SET0033S	**22.00 per foot**	SET0033DS	**23.00 per foot**
Finishing Reels	SET0227S	**11.00 per foot**	SET0227DS	**12.00 per foot**
Three Row Spike Drag SF1436 & SF1544	SET0034S	**16.00 per foot**	SET0034DS	**17.00 per foot**

SUNFLOWER RECOMMENDS THESE SET-UP FIGURES BE USED BY DEALERS WHEN TRANSFERRING EQUIPMENT

♦Frames indicated are over-width and require special permits.

Dealership Assembly requirements:

1. The dealership assembly service must be ordered separately from the implement. (initiates scheduling of service) Please order dealership assembly service from the field installed options tab in e-ordering.
2. Include in the dealership assembly order request the order and/or invoice number of the implement to be assembled.
3. Dealer supplies hydraulic oil (oil is not included).
4. Dealer supplies a fork lift of sufficient size to be used by AGCO's assembly crew.

DEALERSHIP ASSEMBLY AMOUNTS ON 1000 SERIES
(DISCOUNTS DO NOT APPLY)

The factory or dealership set-up amounts will be charged for machines set-up by Sunflower. Set-up amounts are the same whether machines are shipped via our truck (gangs off wings, etc.) or set-up completely and picked up by dealer's truck. Factory assembly charge includes hydraulic hose, hydraulic oil, and tips (hydraulic system is charged). Dealer location assembly charge includes hydraulic hose, and tips. (Hydraulic oil is not included) See note below.

MODEL NUMBER	DEALER LOCATION ORDER CODE	DEALER LOCATION SET-UP RATE
SF1710-10	SET0235DS	1000.00
SF1710-12	SET0236DS	1000.00
SF1710-14	SET0237DS	1000.00
SF1710-16	SET0238DS	1000.00
SF1710-18	SET0239DS	1000.00
SF1730-22	SET0240DS	1200.00
SF1730-24	SET0241DS	1200.00
SF1730-26	SET0242DS	1200.00
SF1710HD-10	SET0243DS	1000.00
SF1710HD-16	SET0244DS	1000.00
SF1810-14	SET0245DS	1100.00
SF1810-16	SET0246DS	1100.00
SF1810-18	SET0247DS	1100.00
SF1830-22	SET0248DS	1500.00
SF1830-24	SET0249DS	1500.00
SF1830-26	SET0250DS	1500.00
SF1830-30	SET0251DS	1650.00
SF1830-34	SET0252DS	1650.00
SF1830-38	SET0253DS	1650.00
Hydraulic Self-Leveler	SET0254DS	100.00
H.D. Coil Tine Harrow	SET0255DS	23.00 per foot
H.D. Coil Tine Harrow & Reel	SET0256DS	25.00 per foot

SUNFLOWER RECOMMENDS THESE SET-UP FIGURES BE USED BY DEALERS WHEN TRANSFERRING EQUIPMENT

♦Frames indicated are over-width and require special permits.

Dealership Assembly requirements:

1. The dealership assembly service must be ordered separately from the implement. (initiates scheduling of service) Please order dealership assembly service from the field installed options tab in e-ordering.
2. Include in the dealership assembly order request the order and/or invoice number of the implement to be assembled.
3. Dealer supplies hydraulic oil (oil is not included).
4. Dealer supplies a fork lift of sufficient size to be used by AGCO's assembly crew.

1212 SERIES SINGLE SECTION TANDEM DISCS
F.O.B. Beloit, KS

STANDARD CONFIGURATION

2 New 8 Ply, 11L x 15 Tubeless Tires, 10' and 12' Discs (3058YS)
2 15" x 10" Six Bolt Wheels and Hubs with Zerk, 2" Slip-in Spindles and Triple Lip Seals, 10' and 12' Discs
4 New 8 Ply, 11L x 15 Tubeless Tires, 13' and 15' Discs (3058YS)
Maintenance Free Lift System
4 15" x 10" Six Bolt Wheels and Hubs with Zerk, 2" Slip-in Spindles and Triple Lip Seals, 13' and 15' Discs
4 High Strength 1-3/4" Round Stress Proof Gang Shafts on All Sizes
Hydraulic Hose Holder
1 Double Lip Hitch with 1-1/4" Hole (7500017S)
1 Lift Cylinder (4 x 10), with Depth Stop and 1/2" Hydraulic Hose (2500178R)
1 Tongue Jack
Triple Sealed Greaseable Trunnion Style Gang Bearings
1-3/4" Alloy Steel Gang Shaft
C-Flex Bearing Standards (1-1/4" x 2-1/2")
4" wide Rigid Scraper Assemblies Mounted to C-Flex
Warning Light Kit, Complete with Wiring to Tractor
SMV Emblem

DISC MODEL	SF1212-10'	SF1212-12'	SF1212-13'	SF1212-15'
CUTTING WIDTH	10' 6"	11' 10"	13' 3"	14' 7"
GANG STANDARDS	6 / 4	6 / 4	6 / 6	6 / 6
QTY of BLADES 8½"	14 / 14	16 / 16	18 / 18	20 / 20

These prices reflect the standard configuration. If items other than those listed in the standard configuration are ordered, then the quoted price below will change.

For Quotation Purposes Only – Please Order Items from the Groups on the Next Pages

MODEL NUMBER	CUTTING WIDTH	BLADE DIAMETER	EST. WEIGHT	¼" THICK (4 GA) BLADES	6 GAUGE BLADES
SF1212-10	10' 6"	22.00"	4648	18,140.00	17,451.00
SF1212-10	10' 6"	24.00"	4802	18,568.00	18,328.00
SF1212-12	11' 10"	22.00"	4894	19,048.00	18,276.00
SF1212-12	11' 10"	24.00"	5074	19,538.00	19,186.00
SF1212-13	13' 3"	22.00"	5670	21,059.00	20,256.00
SF1212-13	13' 3"	24.00"	5871	21,622.00	21,280.00
SF1212-15	14' 7"	22.00"	5835	22,644.00	21,609.00
SF1212-15	14' 7"	24.00"	6144	23,195.00	22,728.00

* Estimated weight when equipped with 4 GA blades

1212 SERIES SINGLE SECTION TANDEM DISCS

ORDER CODE	DESCRIPTION	APPROX. WEIGHT (LBS)	LIST PRICE
	Select One Order Code from Each Group, 01 through 06.		
Group 01 Base Machine			
SF1212-10	12121000, 10' Single Section Tandem Disc	1700	8,693.00
SF1212-12	12121200, 12' Single Section Tandem Disc	1700	9,219.00
SF1212-13	12121300, 13' Single Section Tandem Disc	1855	9,246.00
SF1212-15	12121500, 15' Single Section Tandem Disc	1855	10,162.00
Group 02 Gangs	**Smooth Blades, 8½" Blade Spacing**		
SF1212-10			
12301598S	22" 6 Gauge, C-Flex	2257	6,001.00
12301597S	22" 4 Gauge, C-Flex	2420	6,690.00
12301600S	24" 6 Gauge, C-Flex	2397	6,878.00
12301599S	24" 4 Gauge, C-Flex	2574	7,118.00
SF1212-12			
12301602S	22" 6 Gauge, C-Flex	2479	6,300.00
12301601S	22" 4 Gauge, C-Flex	2666	7,072.00
12301604S	24" 6 Gauge, C-Flex	2628	7,210.00
12301603S	24" 4 Gauge, C-Flex	2846	7,562.00
SF1212-13			
12301606S	22" 6 Gauge, C-Flex	2858	7,402.00
12301605S	22" 4 Gauge, C-Flex	3071	8,205.00
12301608S	24" 6 Gauge, C-Flex	3023	8,426.00
12301607S	24" 4 Gauge, C-Flex	3272	8,768.00
SF1212-15			
12301610S	22" 6 Gauge, C-Flex	3206	7,839.00
12301609S	22" 4 Gauge, C-Flex	3236	8,874.00
12301612S	24" 6 Gauge, C-Flex	3297	8,958.00
12301611S	24" 4 Gauge, C-Flex	3545	9,425.00
Group 03 Tires			
3058YS	New 8 Ply, 11L Tubeless Tire / 6 Bolt Wheel (15" x 10")	65	319.00
3587YS	New 12 Ply, 11L Tubeless Tire / 6 Bolt Wheel (15" x 10")	74	350.00

MODELS	ORDER QUANTITY
SF1212-10 and SF1212-12	2
SF1212-13 and SF1212-15	4

1212 SERIES SINGLE SECTION TANDEM DISCS

ORDER CODE	DESCRIPTION	APPROX. WEIGHT (LBS)	LIST PRICE

Select One Order Code from Each Group, 01 through 06.

Group 04 Hitches

7500017S	Double Lip Hitch with 1-1/4" Pin Hole	20	160.00
7500018S	Single Lip Hitch with 1-1/4" Pin Hole	20	160.00

Group 05 Lift Cylinder

2500178RS	4" x 10" Lift Cylinder with Depth Stop and 1/2" Hydraulic Hose	51	430.00

Group 06 Lift Assembly

7500567RS	For 10' and 12', Standard Lift Assembly	327	1,529.00
7500568RS	For 13' and 15', Standard Lift Assembly	413	1,742.00

Optional Equipment - For Current Machines Only

Dual Wheel Kit for 10' and 12' Discs

7500001YS	Dual Wheel Kit with Two New 8 Ply, 11L x 15 Tubeless Tires	250	744.00
7500032YS	Dual Wheel Kit with Two New 12 Ply, 11L x 15 Tubeless Tires	270	891.00
5842RS	Rear Tow Hitch with Ball Joint	169	842.00
5843RS	Rear Tow Hitch with Hitch Slide and Ball Joint	189	1,045.00
18663BS	Gang Wrench, 2-3/4"	20	89.00
12634PLS	Wiring Harness to Plug Soil Conditioner Lights into Implement Lights		223.00

Three Row Coil Tine Finishing Harrows For 1212 Series Discs

Spring Loaded Drag Arms with all Required Hardware and Mounting Brackets

Three Rows of 3/8" x 16" Coil Tines on 7-1/2" Centers, 2-1/2" Spacing Overall, with Angle Adjustment and Backup Protection

15" Spacing Between Rows

MODEL	SECTION
SF1212-10	52½" 67½"
SF1212-12	67½" 67½"
SF1212-13	67½" 82½"
SF1212-15	67½" 97½"

17001720RS	SF1212-10	544	2,969.00
17001721RS	SF1212-12	564	3,292.00
17001722RS	SF1212-13	589	3,426.00
17001723RS	SF1212-15	608	3,494.00

1234 SERIES THREE SECTION FLEXIBLE TANDEM DISCS
F.O.B. Beloit, KS

STANDARD CONFIGURATION

6 New 8 Ply, 11L x 15 Tubeless Tires on 18',and 21' Discs
6 15" x 10" Six Bolt Wheels and Hubs with Zerk, 2" Spindles and Triple Lip Seals on 18' and 21' Discs
8 New 8 Ply, 11L x 15 Tubeless Tires on 24' and 27' Discs
8 New 12 Ply, 11L x 15 Tubeless Tires on 29' and 32' Discs
8 15" x 10" Six Bolt Wheels and Hubs with Zerk, 2" Spindles and Triple Lip Seals on 24', 27', 29' and 32'
1 Rephasing Lift System with Single Point Depth Control
1 Self-leveling Hitch Assembly with Manual Screw Type Adjustment (7890RS)
1 Cast Single Lip Hitch for 1-7/8" Pin, Category III on 18' through 24' Discs (7921GS)
1 Cast Single Lip Hitch for 2" Pin, Category IV on 27' through 32' Discs (6933GS)
2 Heavy-duty Gauge Wheels with 8.00 x 10 New Tires and Tubes, Five Bolt Hub and Triple Lip Seal on All Sizes
High Strength 1-3/4" Round Stress Proof Gang Shafts
Triple Sealed Greaseable Trunnion Gang Bearings with Shields
Maintenance Free Lift System
Automatic Transport Lock with Relief Valve
C-Flex Bearing Standard (1-1/4" x 2-1/2")
4" wide Rigid Scraper Assemblies Mounted to C-Flex
Safety Equipment Including: Light Kit, SMV Emblem, and Safety Chain

1234 SERIES
THREE SECTION FLEXIBLE TANDEM DISC

DISC MODEL	SF1234-18'	SF1234-21' (NC)	SF1234-21' (WC)	SF1234-24' (NC)	SF1234-24' (WC)	SF1234-27'	SF1234-29'	SF1234-32'
TRANS. WIDTH	12' 8"	12' 5"	15' 4"	12' 5"	15' 4"	15' 4"	15' 4"	15' 4"
TRANS. HEIGHT	10' 2"	11' 5"	10' 2"	12' 10"	11' 5"	12' 7"	13' 11"	15' 4"
FRAME SIZE	5½ - 7 - 5½	7 - 7 - 7	5½ - 10 - 5½	8½ - 7 - 8½	7 - 10 - 7	8½ - 10 - 8½	9½ - 10 - 9½	11 - 10 - 11
STD GANGS Front / Rear	8/10	10/10	10/10	10/10	12/10	12/10	12/12	14/14
QTY of BLADES 7 ½" x 8 ½" Front / Rear	N/A	N/A	34/32	N/A	38/36	42/40	46/44	52/48
QTY of BLADES 8 ½" x 8 ½" Front / Rear	26/28	30/32	N/A	34/36	34/36	38/40	42/44	46/48

Note: Wing Frames On 1234-29' and -32' Discs Are Over-Width (10' 4" and 11' 4") And Require Special Permits.

SUNFLOWER

1234 SERIES THREE SECTION FLEXIBLE TANDEM DISCS

These prices reflect the standard configuration. If items other than those listed in the standard configuration are ordered, then the quoted price below will change.

For Quotation Purposes Only – Please Order Items from the Groups on the Next Pages

MODEL NUMBER	CUTTING WIDTH	BLADE DIAMETER	EST. WEIGHT	¼" THICK (4 GA) BLADES	6 GAUGE BLADES
SMOOTH BLADES - 8½" BLADE SPACING					
SF1234-18	18' 11"	22"	9829	41,360.00	40,061.00
SF1234-18	18' 11"	24"	10034	42,208.00	40,725.00
SF1234-21(NC)	21' 8"	22"	10690	45,134.00	43,688.00
SF1234-21(NC)	21' 8"	24"	10940	46,121.00	44,439.00
SF1234-24(NC)	24' 5"	22"	12184	50,003.00	48,402.00
SF1234-24(NC)	24' 5"	24"	12467	51,152.00	49,265.00
SF1234-24(WC)	24' 5"	22"	12422	50,899.00	49,298.00
SF1234-24(WC)	24' 5"	24"	12705	52,044.00	50,161.00
SF1234-27	27' 2"	22"	13427	53,710.00	51,882.00
SF1234-27	27' 2"	24"	13742	54,930.00	52,842.00
SF1234-29	29' 11"	22"	15370	58,981.00	56,978.00
SF1234-29	29' 11"	24"	15714	60,332.00	58,002.00
SF1234-32	32' 8"	22"	16816	62,652.00	60,474.00
SF1234-32	32' 8"	24"	17192	64,173.00	61,628.00
SMOOTH BLADES - 7½" FRONT and 8½" REAR BLADE SPACING					
SF1234-21(WC)	21' 8"	22"	10904	46,249.00	44,742.00
SF1234-24(WC)	24' 5"	22"	12578	50,899.00	49,298.00
SF1234-27	27' 2"	22"	13583	54,171.00	52,312.00
SF1234-29	29' 11"	22"	15628	59,750.00	57,637.00
SF1234-32	32' 8"	22"	17098	63,376.00	61,109.00

1234 SERIES THREE SECTION FLEXIBLE TANDEM DISCS

ORDER CODE	DESCRIPTION	APPROX. WEIGHT (LBS)	LIST PRICE

Select One Order Code from Each Group, 01 through 08.

Group 01 Base Machine

SF1234-18	12341800, 18' Three Section Flexible Tandem Disc	5232	21,580.00
SF1234-21NC	12342101, 21' 3 Sect Flex Tandem (Narrow Center)	5299	22,956.00
SF1234-21WC	12342100, 21' 3 Sect Flex Tandem (Wide Center)	5221	23,300.00
SF1234-24NC	12342401, 24' 3 Sect Flex Tandem (Narrow Center)	6167	25,735.00
SF1234-24WC	12342400, 24' 3 Sect Flex Tandem (Wide Center)	6089	25,948.00
SF1234-27	12342700, 27' Three Section Flexible Tandem Disc	6689	27,422.00
SF1234-29	12342900, 29' Three Section Flexible Tandem Disc	8027	31,327.00
SF1234-32	12343200, 32' Three Section Flexible Tandem Disc	8857	32,373.00

Group 02 Gangs Smooth Blades, 8½" Blade Spacing

SF1234-18

12301459S	22" 6 Gauge, C-Flex	4078	12,575.00
12301306S	22" 4 Gauge, C-Flex	4078	13,874.00
12301460S	24" 6 Gauge, C-Flex	4283	13,239.00
12301310S	24" 4 Gauge, C-Flex	4283	14,722.00

SF1234-21NC

12301462S	22" 6 Gauge, C-Flex	4872	14,826.00
12301312S	22" 4 Gauge, C-Flex	4872	16,272.00
12301463S	24" 6 Gauge, C-Flex	5122	15,577.00
12301316S	24" 4 Gauge, C-Flex	5122	17,259.00

SF1234-24NC

12301469S	22" 6 Gauge, C-Flex	5368	15,892.00
12301318S	22" 4 Gauge, C-Flex	5368	17,493.00
12301470S	24" 6 Gauge, C-Flex	5651	16,755.00
12301322S	24" 4 Gauge, C-Flex	5651	18,642.00

SF1234-24WC

12301473S	22" 6 Gauge, C-Flex	5466	16,362.00
12301334S	22" 4 Gauge, C-Flex	5466	17,963.00
12301474S	24" 6 Gauge, C-Flex	5749	17,225.00
12301338S	24" 4 Gauge, C-Flex	5749	19,108.00

SF1234-27

12301477S	22" 6 Gauge, C-Flex	5949	17,428.00
12301342S	22" 4 Gauge, C-Flex	5949	19,256.00
12301478S	24" 6 Gauge, C-Flex	6264	18,388.00
12301346S	24" 4 Gauge, C-Flex	6264	20,476.00

SF1234-29

12301508S	22" 6 Gauge, C-Flex	6622	18,290.00
12301510S	22" 4 Gauge, C-Flex	6622	20,293.00
12301511S	24" 6 Gauge, C-Flex	6966	19,314.00
12301512S	24" 4 Gauge, C-Flex	6966	21,644.00

SF1234-32

12301485S	22" 6 Gauge, C-Flex	7238	20,740.00
12301358S	22" 4 Gauge, C-Flex	7238	22,918.00
12301486S	24" 6 Gauge, C-Flex	7614	21,894.00
12301362S	24" 4 Gauge, C-Flex	7614	24,439.00

1234 SERIES THREE SECTION FLEXIBLE TANDEM DISCS

ORDER CODE	DESCRIPTION	APPROX. WEIGHT (LBS)	LIST PRICE

Select One Order Code from Each Group, 01 through 08.

Group 02 Gangs - Continued Smooth Blades - 7½" FRONT and 8½" REAR BLADE SPACING

SF1234-21WC

12301465S	22" 6 Gauge, C-Flex	5164	15,198.00
12301330S	22" 4 Gauge, C-Flex	5164	16,705.00

SF1234-24WC

12301472S	22" 6 Gauge, C-Flex	5622	15,865.00
12301332S	22" 4 Gauge, C-Flex	5622	17,544.00

SF1234-27

12301596S	22" 6 Gauge, C-Flex	6105	17,858.00
12301595S	22" 4 Gauge, C-Flex	6105	19,717.00

SF1234-29

12301507S	22" 6 Gauge, C-Flex	6880	18,949.00
12301509S	22" 4 Gauge, C-Flex	6880	21,062.00

SF1234-32

12301513S	22" 6 Gauge, C-Flex	7520	21,375.00
12301514S	22" 4 Gauge, C-Flex	7520	23,642.00

Group 03 Tires – See Chart Below

Note – Tires On Wings & Center Frames Must Be The Same Ply Rating

3058YS	New 8 Ply, 11L Tubeless Tire, 6 Bolt Wheel (15" x 10")	65	319.00
3587YS	New 12 Ply, 11L Tubeless Tire, 6 Bolt Wheel (15" x 10")	74	350.00

Group 04 Dual Wing Wheel Kit for 24' WC & 27' Discs – See Chart Below

7500001YS	Dual Wheel Kit with Two New 8 Ply, 11L x 15 Tubeless Tires	270	744.00
7500032YS	Dual Wheel Kit with Two New 12 Ply, 11L x 15 Tubeless Tires	288	891.00

MODEL	(Qty) CENTERS	(Qty) WINGS
SF1234-18	(4) 3058YS or 3587YS	(2) 3058YS or 3587YS
SF1234-21NC	(4) 3058YS or 3587YS	(2) 3058YS or 3587YS
SF1234-21WC	(4) 3058YS or 3587YS	(2) 3058YS or 3587YS
SF1234-24NC	(4) 3058YS or 3587YS	(4) 3058YS or 3587YS
SF1234-24WC and SF1234-27	(4) 3058YS or 3587YS	(2) 3058YS or 3587YS and (1) 7500001YS or 7500032YS
SF1234-29 and SF1234-32	(4) 3587YS	(4) 3587YS

1234 SERIES THREE SECTION FLEXIBLE TANDEM DISCS

ORDER CODE	DESCRIPTION	APPROX. WEIGHT (LBS)	LIST PRICE

Select One Order Code from Each Group, 01 through 08.

Group 05 Center Lifts

7500473RS	Lift Assy, Center, 2" Spindles - 18, 21NC, 24NC		1,940.00
7500471RS	Lift Assy, Center, 2" Spindles - 21WC, 24WC, 27, 29, 32		2,278.00

Group 06 Wing Lifts

7500474RS	Lift Assy, Wings, 2" Spindles - 18, 21NC, 21WC, 24WC		1,411.00
7500475RS	Lift Assy, Wings, 2" Spindles - 27		1,455.00
7500472RS	Lift Assy, Wings, 2" Spindles - 24NC, 29, 32		1,642.00

Group 07 Levelers

7890RS	Self-Leveling Hitch with Manual Screw Adjustment	100	481.00
2500116RS	Hydraulic Self-Leveling System with Level Indicator	155	1,513.00

Group 08 Hitches

For Use with 18' through 24'

7921GS	Cast Single Lip Hitch for 1-7/8" Pin Hole, Category III	29	160.00
7924GS	Double Lip Hitch with 1-9/16" Pin Hole	21	160.00

For Use with 27'

6933GS	Cast Single Lip Hitch for 2" Pin Hole, Category IV	29	160.00
7960GS	Double Lip Hitch with 1-7/8" Pin Hole	22	160.00

For Use with 29' through 32'

6933GS	Cast Single Lip Hitch for 2" Pin Hole, Category IV	29	160.00
7960GS	Double Lip Hitch with 1-7/8" Pin Hole	22	160.00
7921GS	Cast Single Lip Hitch for 1-7/8" Pin Hole, Category III	29	160.00
7924GS	Double Lip Hitch with 1-9/16" Pin Hole	21	160.00

Optional Equipment For Current Machines Only

Dual Wheel Kit for 18' and 21' Discs

7500001YS	Dual Wheel Kit with Two New 8 Ply, 11L x 15 Tubeless Tires	270	744.00
7500032YS	Dual Wheel Kit with Two New 12 Ply, 11L x 15 Tubeless Tires	288	891.00

Rear Tow Hitch for 18', 21'(NC), and 24'(NC) Discs (not available with finishing attachments)

7937BS	Rear Tow Hitch with Hitch Slide and Ball Joint	83	467.00
7933BS	Rear Tow Hitch with Ball Joint	61	267.00

Rear Tow Hitch for 21'(WC), 24'(WC), 27', 29' and 32' Discs (not available with finishing attachments)

7939BS	Rear Tow Hitch with Hitch Slide and Ball Joint	84	558.00
7938BS	Rear Tow Hitch with Ball Joint	57	356.00
7500271BS	Wheel bearing shields, "Delta Special"	100	216.00
18663BS	Gang Wrench, 2-3/4"	20	89.00
12634PLS	Wiring Harness to Plug Soil Conditioner Lights into Implement Lights		223.00

1234 SERIES THREE SECTION FLEXIBLE TANDEM DISCS

ORDER CODE	DESCRIPTION	APPROX. WEIGHT (LBS)	LIST PRICE

THREE ROW COIL TINE FINISHING HARROWS FOR 1234 SERIES DISCS

Spring Loaded Drag Arms with all Required Hardware and Mounting Brackets
Three Rows of 3/8" x 16" Coil Tines on 7½" Centers, 2½" Spacing Overall, with Angle Adjustment and Backup Protection
15" Spacing Between Rows

17001456RS	SF1234-18	950	4,752.00
17001457RS	SF1234-21(NC)	985	4,883.00
17001458RS	SF1234-21(WC)	1098	5,465.00
17001459RS	SF1234-24(NC)	1059	5,533.00
17001460RS	SF1234-24(WC)	1135	5,599.00
17001461RS	SF1234-27	1184	5,732.00
17001462RS	SF1234-29	1640	8,060.00
17001463RS	SF1234-32	1683	8,114.00

THREE ROW COIL TINE FINISHING HARROWS - HEAVY DUTY

Spring Loaded Drag Arms with all Required Hardware and Mounting Brackets
Three Rows of 1/2" x 22" Coil Tines on 12" Centers, 4" Spacing Overall, with Angle Adjustment and Backup Protection
13" Spacing Between Rows

17001774RS	SF1234-18 Heavy Duty	1600	6,421.00
17001775RS	SF1234-21 (NC) Heavy Duty	1700	7,164.00
17001776RS	SF1234-21 (WC) Heavy Duty	1650	7,374.00
17001777RS	SF1234-24 (NC) Heavy Duty	1800	7,411.00
17001778RS	SF1234-24 (WC) Heavy Duty	1750	7,815.00
17001779RS	SF1234-27 Heavy Duty	2000	8,042.00
17001780RS	SF1234-29 Heavy Duty	1900	7,929.00
17001781RS	SF1234-32 Heavy Duty	2550	9,593.00

MODEL	LEFT WING	CENTER	RIGHT WING
SF1234-18	67½"	82½"	67½"
SF1234-21(NC)	82½"	82½"	82½"
SF1234-21(WC)	67½"	67½" 52½"	67½"
SF1234-24(NC)	97½"	97½"	97½"
SF1234-24(WC)	82½"	67½" 52½"	82½"
SF1234-27	97½"	67½" 52½"	97½"
SF1234-29	37½" 67½"	67½" 52½"	67½" 37½"
SF1234-32	67½" 52½"	67½" 52½"	52½" 67½"

Note: Rear Tow Hitches Are Not Available With Finishing Attachments.
Above Harrows will not fit on Model 1232

1300 SERIES FLEXIBLE OFFSET DISCS

F.O.B. Beloit, KS

STANDARD CONFIGURATION

4 New 8 Ply, 11L x 15 Tubeless Tires on 14’ and 16’ Discs
4 15" x 10" Six Bolt Wheels and Hubs with Zerk, 2" Spindles and Triple Lip Seals on 14’ and 16’ Discs
6 New 8 Ply, 11L x 15 Tubeless Tires on 18’ Discs
6 15" x 10" Six Bolt Wheels and Hubs with Zerk, 2" Spindles and Triple Lip Seals on 18’ Discs
1 4" x 16" Lift Cylinder with Hydraulic Depth Stop and 1/2" Hydraulic Hose on All Sizes
1 Wing Stabilizer on 14’ and 16’ Discs
1 Fold Kit Assembly with 4" x 30" Cylinder and 3/8" Hydraulic Hose on 18’ Discs
1 Double Lip Hitch with 1-1/4" Hole on All Sizes (7500075S)
1 Tongue Jack on All Sizes
1 Heavy-duty Gauge Wheel with 8.00 x 10 New Tire and Tube, Five Bolt Hub and Triple Lip Seal on All Discs
High Strength 1-3/4" Round Stress Proof Gang Shafts
Triple Sealed Greaseable Trunnion Gang Bearings
C-Flex Bearing Standards
Adjustable Dual Scrapers at Bearing Standards on All Sizes
6" wide Rigid Scraper Assemblies at All Other Disc Locations
Safety Equipment Including: Light Kit, SMV Emblem

1321 SERIES
TWO SECTION FLEXIBLE OFFSET DISCS

DISC MODEL	SF1321-14’	SF1321-16’	SF1321-18’
FRAME SIZE	7 – 7	8 – 8	10 – 8
TRANSPORT WIDTH	9’ 10"	10’ 9"	13’
TRANSPORT HEIGHT	11’ 11"	12’ 5"	12’ 7"
STD GANGS Front / Rear	6/6	6/6	9/7
BLADES 8½" Front / Rear	21/21	23/23	26/26

1300 SERIES FLEXIBLE OFFSET DISCS

These prices reflect the standard configuration. If items other than those listed in the standard configuration are ordered, then the quoted price below will change.

For Quotation Purposes Only – Please Order Items from the Groups on the Next Pages

MODEL NUMBER	CUTTING WIDTH	BLADE DIAMETER	EST. WEIGHT	¼" THICK (4 GA) BLADES	6 GAUGE BLADES
SMOOTH BLADES - 8½" BLADE SPACING					
1321 SERIES TWO SECTION FLEXIBLE OFFSET DISC					
SF1321-14	14' 9"	22"	6749	28,672.00	28,247.00
SF1321-14	14' 9"	24"	6879	29,096.00	28,576.00
SF1321-14	14' 9"	26"	7169	30,218.00	N/A
SF1321-16	16'	22"	6699	30,744.00	30,278.00
SF1321-16	16'	24"	7149	31,210.00	30,641.00
SF1321-16	16'	26"	7457	32,504.00	N/A
SF1321-18	18' 6"	22"	8807	36,976.00	36,450.00
SF1321-18	18' 6"	24"	9132	37,503.00	36,860.00
SF1321-18	18' 6"	26"	9485	38,965.00	N/A

1300 SERIES FLEXIBLE OFFSET DISCS

ORDER CODE	DESCRIPTION	APPROX. WEIGHT (LBS)	LIST PRICE

Select One Order Code from Each Group, 01 through 06.

Group 01 Base Machine

SF1321-14	13211403, 14’ Two Section Flexible Offset Disc	3521	17,752.00
SF1321-16	13211603, 16’ Two Section Flexible Offset Disc	3344	18,922.00
SF1321-18	13211803, 18’ Two Section Flexible Offset Disc	4557	23,193.00

Group 02 Gangs Smooth Blades, 8½” Blade Spacing

SF1321-14

12300228S	22" 6 Gauge, C-Flex	2380	8,035.00
12300140S	22" 4 Gauge, C-Flex	2380	8,460.00
12300101S	24" 6 Gauge, C-Flex	2780	8,364.00
12300135S	24" 4 Gauge, C-Flex	2780	8,884.00
12300589S	26" 4 Gauge, C-Flex	3070	10,066.00

SF1321-16

12300247S	22" 6 Gauge, C-Flex	2747	8,799.00
12300255S	22" 4 Gauge, C-Flex	2747	9,265.00
12300082S	24" 6 Gauge, C-Flex	3197	9,162.00
12300073S	24" 4 Gauge, C-Flex	3197	9,731.00
12300628S	26" 4 Gauge, C-Flex	3505	11,025.00

SF1321-18

12300058S	22" 6 Gauge, C-Flex	3460	9,947.00
12300273S	22" 4 Gauge, C-Flex	3460	10,473.00
12300098S	24" 6 Gauge, C-Flex	3785	10,357.00
12300122S	24" 4 Gauge, C-Flex	3785	11,000.00
12300653S	26" 4 Gauge, C-Flex	4138	12,462.00

1300 SERIES FLEXIBLE OFFSET DISCS

ORDER CODE	DESCRIPTION	APPROX. WEIGHT (LBS)	LIST PRICE

Select One Order Code from Each Group, 01 through 05.

Group 03 Tires

MODEL	ORDER QUANTITY	
	CENTERS	WINGS
SF1321-14	3	1
SF1321-16	3	1
SF1321-18	4	2

3058YS	(1) New 8 Ply, 11L Tubeless Tire, 6 Bolt Wheel	65	319.00
3587YS	(1) New 12 Ply, 11L Tubeless Tire, 6 Bolt Wheel	74	350.00

Group 04 Hitches

7500075S	Double Lip Hitch with 1-1/4" Pin Hole	20	147.00
7500074S	Single Lip Hitch with 1-7/8” Pin Hole	20	147.00
7500076S	Single Lip Hitch with 1-1/4" Pin Hole	20	147.00

Group 05 Scrapers

12000009S	Scrapers for SF1321-14	298	1,037.00
12000010S	Scrapers for SF1321-16	328	1,134.00
12000031S	Scrapers for SF1321-18	380	1,249.00

Optional Equipment For Current Machines Only

Dual Wheel Kit for 14’ and 16’ Discs

7500035YS	One Hub, Tire and Wheel - New 8 ply, 11L x 15 Tire	100	377.00
7500478YS	One Hub, Tire and Wheel - New 12 ply, 11L x 15 Tire	110	395.00

Hydraulic Fold Kit for 14’ and 16’ Discs

2500004S	Hydraulic Fold Kit with 4" x 30" Hydraulic Cylinder and 3/8" Hydraulic Hose	200	897.00
18663BS	Gang Wrench, 2-3/4"	20	89.00
12634PLS	Wiring Harness to Plug Soil Conditioner Lights into Implement Lights		223.00

1300 SERIES FLEXIBLE OFFSET DISCS

ORDER CODE	DESCRIPTION	APPROX. WEIGHT (LBS)	LIST PRICE

THREE ROW COIL TINE FINISHING HARROWS FOR 1300 SERIES DISCS

Spring Loaded Drag Arms with all Required Hardware and Mounting Brackets
Three Rows of 3/8" x 16" Coil Tines on 7½" Centers, 2½" Spacing Overall, with Angle Adjustment and Backup Protection
15" Spacing Between Rows

MODEL	CENTER	RIGHT WING
SF1321-14	97½"	82½"
SF1321-16	97½"	97½"
SF1321-18	52½" 67½"	97½"

17001379RS	SF1321-14	722	4,092.00
17001380RS	SF1321-16	748	4,126.00
17001381RS	SF1321-18	965	5,140.00

1436 SERIES THREE SECTION FLEXIBLE DISCS
F.O.B. Beloit, KS

STANDARD CONFIGURATION

6 11L x 15, GY - FI Tires with Six Bolt Wheels and 2” Slip in Spindles (21’) (3587YS)
8 11L x 15, GY - FI Tubeless Tires with Six Bolt Wheels and 2” Slip in Spindles (24’) (3587YS)
8 12.5L x 15, GY - FI, Load Range F with Eight Bolt Wheels and 2-1/4" Slip in Spindles (Centers & Wings 26’ & 29’)
4 380/55R with Eight Bolt Wheels and 2-3/4” Slip in Spindles (Centers 31’ through 36’)
4 12.5L x 15, 12 Ply Tubeless Tires with Six Bolt Wheels and 2-1/4" Slip in Spindles (Wings 31’ through 36’) (3588S)
High Strength 1-3/4" Round Stress Proof Gang Shafts
Triple Sealed, Greaseable, Trunnion Style Gang Bearings
C-Flex Bearing Standards (1-1/4" X 2-1/2")
4" wide Rigid Scrapers Mounted to C-Flex
Maintenance Free Lift System with 5-1/2” Lift Axle on Center Section
1 Cast Single Lip Hitch with 2-3/4" Pin Hole, Category V Hitch (21’ through 36’)
1 Rephasing Lift System with Single Point Depth Control
2 Walking Tandems with Greaseable Tapered Roller Bearings (Center) all Sizes
2 Walking Tandems with Greaseable Tapered Roller Bearings (Wings) 24’ through 36’
Single Wing Tires on 21’
2 Heavy-duty Gauge Wheels with 8.00 x 10 New Tires and Tubes, Five Bolt Hub and Triple Lip Seal
24" x 1/4" Boron Blades, 8.75” blade spacing 20° Gang Angle Front and 18° Gang Angle Rear
1 Adjustment Wrench
1 Hydraulic Self-Leveling System with Level Indicator 21'-29' (2500193RS)
2 Hydraulic Self-Leveling System with Level Indicator 31'-36'(2500192RS)
1 Tongue Jack
LED Lighting Package
Safety Equipment Including: SMV Emblem, and Safety Chain

STANDARD CONFIGURATION (SPLIT WING)

4 New 380/55R x 16.5 Tubeless Tires with Eight Bolt Wheels and 2-3/4" Slip in Spindles (Centers 33’ and 38’)
(16949YS) 4 New 12.5L (GY - FI - I) Tubeless Tires with Eight Bolt Wheel and 2-1/4" Slip in Spindles
(Wings 33’ and 38’) (5555YS)
1 Single Point Depth Control with Rephasing Lift System
Hydraulic Self-Leveling system with Level Indicator (single leveler on 33’ tool dual leveler on 38’ tool)
Center Lifts (2 3/4" Spindle)
Wing Lifts (2 1/4" Spindle)
Heavy Duty Gauge Wheels with 8.00 x 10 tires
26”x 1/4" Boron Blades, 8.75” blade spacing 20° Gang Angle Front and 18° Gang Angle Rear
High Strength 1-3/4” Round Stress Proof Gang Shafts
C-Flex Bearing Standards with Triple Sealed Trunnion Bearings Maintenance Free Lift and Fold Systems
1 2 ¾" Disc Gang Wrench
Safety Equipment including: Light Kit, SMV Emblem and Safety Chain

1436 SERIES 8-3/4" Blade Spacing
THREE SECTION FLEXIBLE TANDEM DISCS

Model Number	1436-21	1436-24	1436-27	1436-29	1436-31	1436-33	1436-33SW	1436-36	1436-38SW
Transport Width	13' 6"	13' 6"	13' 6"	13' 6"	17' 6"	17' 6"	15'6"	17' 6"	17'10"
Transport Height	10' 9"	11' 10"	13' 3"	14' 7"	13' 4"	14' 7"	13'6"	15' 11"	13'6"
Gang Shafts	8	8	8	12	8	12	12	12	12
Gang Standards Front/Rear	8/10	10/10	12/10	12/12	12/12	14/14	16/14	16/16	16/16
Disc Blades Front / Rear	30/32	34/36	38/40	42/44	44/46	48/50	48/50	52/54	56/58

1436 SERIES 9-1/2" Blade Spacing
THREE SECTION FLEXIBLE TANDEM DISCS

Model Number	1436-21	1436-24	1436-27	1436-29	1436-31	1436-33	1436-33SW	1436-36	1436-38SW
Transport Width	13' 6"	13' 6"	13' 6"	13' 6"	17' 6"	17' 6"	15'6"	17' 6"	17'10"
Transport Height	10' 6"	11' 10"	13' 3"	14' 7"	13' 4"	14' 7"	13'6"	15' 11"	13'6"
Gang Shafts	8	8	8	12	8	10	12	12	12
Gang Standards Front / Rear	8/10	10/10	10/10	12/12	12/10	14/12	12/14	14/12	14/12
Disc Blades Front / Rear	28/30	32/34	34/36	38/40	40/42	44/46	44/46	48/50	50/52

1436 SERIES THREE SECTION FLEXIBLE DISCS

These prices reflect the standard configuration. If items other than those listed in the standard configuration are ordered, then the quoted price below will change.

For Quotation Purposes Only – Please Order Items from the Groups on the Next Pages

MODEL NUMBER	FRAME SIZE	CUTTING WIDTH	BLADE DIAMETER	EST. WEIGHT 8.75" SPACING	8.75" SPACING (4 GA BLADES)	9.50" SPACING (4 GA BLADES)	8.75" SPACING (6 GA BLADES)
SMOOTH BORON BLADES – Weights & Cutting Widths reflect 8-3/4" Blade Spacing							
SF1436-21	6-9-6	19’ 11’’	24"	14607	47,467.00	47,335.00	46,997.00
SF1436-24	7 ½-9-7 ½	22’ 8"	24"	16005	54,081.00	53,927.00	53,517.00
SF1436-27	9-9-9	25’ 5”	24"	17858	60,597.00	59,300.00	59,966.00
SF1436-29	10-9-10	28’ 2”	24"	19040	64,748.00	63,949.00	63,977.00
SF1436-31	9-13-9	29’ 5”	24"	20091	70,718.00	69,089.00	69,713.00
SF1436-33	10-13-10	32’ 2”	24"	21443	70,805.00	69,484.00	70,090.00
SF1436-36	11 ½-13-11 ½	34’ 11”	24"	22740	78,692.00	75,823.00	77,376.00
SF1436-33SW	5-7 ½-10-7 ½-5	32’ 10”	24"	22740	86,673.00	82,876.00	84,714.00
SF1436-38SW	6-7 ½-13-7 ½-6	38’ 2”	24"	22740	89,896.00	86,954.00	88,105.00
ROLLABLE BORON, SMOOTH BLADES – (Weights and Cutting Widths reflect 8-3/4" Blade Spacing)							
SF1436-21	6-9-6	19’ 11’’	24"	14607	54,384.00	54,562.00	N/A
SF1436-24	7-9-7	22’ 8"	24"	16005	53,324.00	53,502.00	N/A
SF1436-27	8 ½-9-8 ½	25’ 5”	24"	17858	61,226.00	59,965.00	N/A
SF1436-29	10-9-10	28’ 2”	24"	19040	65,312.00	64,508.00	N/A
SF1436-31	8 ½-13-8 ½	29’ 5”	24"	20091	71,102.00	69,645.00	N/A
SF1436-33	10-13-10	32’ 2”	24"	21443	71,528.00	70,069.00	N/A
SF1436-36	11 ½-13-11 ½	34’ 11”	24"	22740	79,091.00	77,324.00	N/A
SF1436-33SW	5-7½-10-7½-5	32’ 10”	24"	21443	86,907.00	83,280.00	N/A
SF1436-38SW	6-7 ½-13-7 ½-6	38’ 2”	24"	22740	90,509.00	87,156.00	N/A

Rollable Boron Blades are not recommended in rocky conditions

DUE TO THE AGGRESSIVE 20°GANG ANGLE OF THE 1436,
4 GAUGE BLADES ARE STRONGLY RECOMMENDED IN MOST FIELD CONDITIONS.

1436 SERIES THREE SECTION FLEXIBLE DISCS

ORDER CODE	DESCRIPTION	APPROX. WEIGHT (LBS)	LIST PRICE

Select One Order Code from Each Group, 01 through 05.

Group 01 Base Machine

SF1436-21	14362100, 21' Three Section Flexible Tandem Disc	7384	25,572.00
SF1436-24	14362400, 24' Three Section Flexible Tandem Disc	7846	29,267.00
SF1436-27	14362700, 27' Three Section Flexible Tandem Disc	8778	31,943.00
SF1436-29	14362900, 29' Three Section Flexible Tandem Disc	9199	35,124.00
SF1436-31	14363100, 31' Three Section Flexible Tandem Disc	8660	38,334.00
SF1436-33	14363300, 33' Three Section Flexible Tandem Disc	9070	37,416.00
SF1436-33SW	14363301, 33' Split Wing Three Section Flexible Tandem Disc	9070	47,063.00
SF1436-36	14363600, 36' Three Section Flexible Tandem Disc	9548	40,036.00
SF1436-38SW	14363800, 38' Split Wing Three Section Flexible Tandem Disc	9548	49,525.00

Group 02 Gangs Smooth Blades with Rigid Scrapers

SF1436-21

12301677S	24" 4 Gauge, C-Flex, 8.75"	6291	17,719.00
12301689S	24" 6 Gauge, C-Flex, 8.75"	5887	17,249.00
12301693S	24" 4 Gauge, C-Flex, 9.50"	6469	17,587.00
12301685S	24" 4 Gauge, C-Flex, 8.75" with Rollable Boron Blades . . .	6291	18,161.00
12301697S	24" 4 Gauge, C-Flex, 9.50" with Rollable Boron Blades . . .	6469	17,982.00

SF1436-24

12301678S	24" 4 Gauge, C-Flex, 8.75"	7068	19,740.00
12301690S	24" 6 Gauge, C-Flex, 8.75"	6605	19,176.00
12301694S	24" 4 Gauge, C-Flex, 9.50"	7332	19,586.00
12301686S	24" 4 Gauge, C-Flex, 8.75" with Rollable Boron Blades . . .	7068	20,221.00
12301698S	24" 4 Gauge, C-Flex, 9.50" with Rollable Boron Blades . . .	7332	20,043.00

SF1436-27

12301679S	24" 4 Gauge, C-Flex, 8.75"	7838	23,028.00
12301691S	24" 6 Gauge, C-Flex, 8.75"	7316	22,397.00
12301695S	24" 4 Gauge, C-Flex, 9.50"	7727	21,731.00
12301687S	24" 4 Gauge, C-Flex, 8.75" with Rollable Boron Blades . . .	7838	23,657.00
12301699S	24" 4 Gauge, C-Flex, 9.50" with Rollable Boron Blades . . .	7727	22,396.00

SF1436-29

12301680S	24" 4 Gauge, C-Flex, 8.75"	8600	23,998.00
12301692S	24" 6 Gauge, C-Flex, 8.75"	8015	23,227.00
12301696S	24" 4 Gauge, C-Flex, 9.50"	8676	23,199.00
12301688S	24" 4 Gauge, C-Flex, 8.75" with Rollable Boron Blades . . .	8600	24,562.00
12301700S	24" 4 Gauge, C-Flex, 9.50" with Rollable Boron Blades . . .	8676	23,758.00

SF1436-31

12301671S	24" 4 Gauge, C-Flex, 8.75"	8909	23,993.00
12301673S	24" 6 Gauge, C-Flex, 8.75"	8271	22,988.00
12301672S	24" 4 Gauge, C-Flex, 9.50"	8912	22,364.00
12301674S	24" 4 Gauge, C-Flex, 8.75" with Rollable Boron Blades . . .	8909	24,377.00
12301675S	24" 4 Gauge, C-Flex, 9.50" with Rollable Boron Blades . . .	8912	22,920.00

1436 SERIES THREE SECTION FLEXIBLE DISCS

ORDER CODE	DESCRIPTION	APPROX. WEIGHT (LBS)	LIST PRICE

Select One Order Code from Each Group, 01 through 05.

Group 02 Gangs Smooth Blades with Rigid Scrapers - Continued

SF1436-33

12301665S	24" 4 Gauge, C-Flex, 8.75"	9839	24,998.00
12301667S	24" 6 Gauge, C-Flex, 8.75"	9141	24,283.00
12301666S	24" 4 Gauge, C-Flex, 9.50"	9886	23,677.00
12301668S	24" 4 Gauge, C-Flex, 8.75" with Rollable Boron Blades	9839	25,721.00
12301669S	24" 4 Gauge, C-Flex, 9.50" with Rollable Boron Blades	9884	24,262.00

SF1436-33SW

12301701S	24" 4 Gauge, C-Flex, 8.75"	9839	31,219.00
12301703S	24" 6 Gauge, C-Flex, 8.75"	9141	29,260.00
12301704S	24" 4 Gauge, C-Flex, 9.50"	9886	27,422.00
12301702S	24" 4 Gauge, C-Flex, 8.75" with Rollable Boron Blades	9839	31,453.00
12301705S	24" 4 Gauge, C-Flex, 9.50" with Rollable Boron Blades	9884	27,826.00

SF1436-36

12301659S	24" 4 Gauge, C-Flex, 8.75"	10762	30,265.00
12301661S	24" 6 Gauge, C-Flex, 8.75"	10004	28,949.00
12301660S	24" 4 Gauge, C-Flex, 9.50"	10534	27,396.00
12301662S	24" 4 Gauge, C-Flex, 8.75" with Rollable Boron Blades	10762	30,664.00
12301663S	24" 4 Gauge, C-Flex, 9.50" with Rollable Boron Blades	10534	28,897.00

SF1436-38SW

12301706S	24" 4 Gauge, C-Flex, 8.75"	10762	31,980.00
12301708S	24" 6 Gauge, C-Flex, 8.75"	10004	30,189.00
12301709S	24" 4 Gauge, C-Flex, 9.50"	10534	29,038.00
12301707S	24" 4 Gauge, C-Flex, 8.75" with Rollable Boron Blades	10762	32,593.00
12301710S	24" 4 Gauge, C-Flex, 9.50" with Rollable Boron Blades	10534	29,240.00

Group 03 Tires

MODEL	ORDER QUANTITY	CENTERS	ORDER QUANTITY	WINGS
SF1436-21 SF1436-24	4	5552YS	4	5552YS
SF1436-27 SF1436-29	4	5555YS	4	5555YS
SF1436-31 SF1436-33 SF1436-36 SF1436-33SW SF1436-38SW	4	16949S	4	5555YS

All Wheels are 15” x 10”; All Tires are Tubeless

For 21-24 (Order 6 for 21' and 8 for 24')

5552YS	(1) New 11L x 15 (GY - FI) Load Range F Tubeless Tire 8 Bolt Wheel (15" x 10")	510	449.00

For 27-29 (Order 8)

5555YS	(1) New 12.5L, GY - FI, Load Range F Tire, 8 Bolt Wheel, (2-1/4" Spindle)	104	518.00

For 31-38 (Order 4 of 5555YS and 4 of 16949YS)

16949YS	New 380/55R-16.5 Tubeless Tire, 8 Bolt Wheel	154	839.00

1436 SERIES THREE SECTION FLEXIBLE DISCS

ORDER CODE	DESCRIPTION	APPROX. WEIGHT (LBS)	LIST PRICE
	Select One Order Code from Each Group, 01 through 05.		
	Group 04 Levelers		
	21' through 29' Discs		
2500190RS	Standard Self Leveler Assembly		984.00
2500193RS	Hydraulic Self Leveler Assembly		1,482.00
	33' Split-Wing		
2500199RS	Standard Self Leveler Assembly		984.00
2500198RS	Hydraulic Self Leveler Assembly		1,482.00
	31' through 36' Discs and 38' Split-Wing		
2500191RS	Standard Self Leveler Assembly	247	1,617.00
2500192RS	Hydraulic Self Leveler Assembly	290	2,963.00
	Group 05 Hitches		
7921GS	Cast Single Lip Hitch, 1 7/8" hole Category III		160.00
7924GS	Hitch Clevis, 4" double 1 9/16" Hole		160.00
6933GS	Cast Single Lip Hitch, 2" Hole Category IV		160.00
7960GS	Hitch Clevis, 4" Double 1 7/8" Hole		160.00
16785GS	Cast Single Lip Hitch, 2 3/4" Hole Category V		240.00
	DUAL SCRAPER OPTION FOR 1436 DISC HARROWS		
	Order Both Catalog Numbers for Full Front and Rear Sets		
	For 21'		
19094BS	Front Dual Scraper, 8 3/4" Spacing		319.00
19095BS	Rear Dual Scraper, 8 3/4" Spacing		382.00
19102BS	Front Dual Scraper, 9 1/2" Spacing		319.00
19103BS	Rear Dual Scraper, 9 1/2" Spacing		382.00
	For 24'		
19096BS	Front Dual Scraper, 8 3/4" Spacing		382.00
19097BS	Rear Dual Scraper, 8 3/4" Spacing		382.00
19104BS	Front Dual Scraper, 9 1/2" Spacing		382.00
19105BS	Rear Dual Scraper, 9 1/2" Spacing		382.00
	For 27'		
19098BS	Front Dual Scraper, 8 3/4" Spacing		445.00
19099BS	Rear Dual Scraper, 8 3/4" Spacing		382.00
19106BS	Front Dual Scraper, 9 1/2" Spacing		382.00
19107BS	Rear Dual Scraper, 9 1/2" Spacing		382.00
	For 29'		
19100BS	Front Dual Scraper, 8 3/4" Spacing		445.00
19101BS	Rear Dual Scraper, 8 3/4" Spacing		445.00
19108BS	Front Dual Scraper, 9 1/2" Spacing		445.00
19109BS	Rear Dual Scraper, 9 1/2" Spacing		445.00
	For 31'		
19075BS	Front Dual Scraper, 8 3/4" Spacing		445.00
19076BS	Rear Dual Scraper, 8 3/4" Spacing		445.00
19081BS	Front Dual Scraper, 9 1/2" Spacing		445.00
19082BS	Rear Dual Scraper, 9 1/2" Spacing		382.00
	For 33'		
19073BS	Front Dual Scraper, 8 3/4" Spacing		511.00
19074BS	Rear Dual Scraper, 8 3/4" Spacing		511.00
19079BS	Front Dual Scraper, 9 1/2" Spacing		511.00
19080BS	Rear Dual Scraper, 9 1/2" Spacing		445.00

1436 SERIES THREE SECTION FLEXIBLE DISCS

ORDER CODE	DESCRIPTION	APPROX. WEIGHT (LBS)	LIST PRICE
For 33'SW			
19273BS	Front Dual Scraper, 8 3/4" Spacing		581.00
19274BS	Rear Dual Scraper, 8 3/4" Spacing		530.00
19276BS	Front Dual Scraper, 9 1/2" Spacing		480.00
19277BS	Rear Dual Scraper, 9 1/2" Spacing		530.00
For 36'			
19071BS	Front Dual Scraper, 8 3/4" Spacing		580.00
19072BS	Rear Dual Scraper, 8 3/4" Spacing		580.00
19077BS	Front Dual Scraper, 9 1/2" Spacing		511.00
19078BS	Rear Dual Scraper, 9 1/2" Spacing		432.00
For 38'SW			
19256BS	Front Dual Scraper, 8 3/4" Spacing		581.00
19257BS	Rear Dual Scraper, 8 3/4" Spacing		581.00
19258BS	Front Dual Scraper, 9 1/2" Spacing		530.00
19259BS	Rear Dual Scraper, 9 1/2" Spacing		480.00

THREE ROW SPIKE DRAG FINISHING HARROWS FOR 1436 DISCS

All Required Hardware and Mounting Brackets

Three Rows of 3/4" x 11" Square Spikes on 9" Centers, 3" Spacing Overall

MODEL	LEFT WING	CENTER	RIGHT WING
SF1436-21	6 ½'	8 3/4'	6 ½'
SF1436-24	8'	8'	8'
SF1436-27	8 3/4'	8 3/4'	8 3/4'
SF1436-29	10 1/4'	8'	10 1/4'
SF1433-31	8'	8 3/4'	8'
SF1436-33	9 ½'	8 3/4'	9 ½'
SF1436-36	8 3/4'	8 3/4'	8 3/4'
SF1436-33SW	6 ½'	8 3/4'	6 ½'
SF1436-38SW	6 ½'	8 3/4'	6 ½'

17001842RS	SF1436-21	1015	5,176.00
17001844RS	SF1436-24	1110	5,280.00
17001846RS	SF1436-27	1200	5,408.00
17001848RS	SF1436-29	1445	5,714.00
17001820RS	SF1436-31	1520	6,133.00
17001818RS	SF1436-33	1615	6,398.00
17001816RS	SF1436-36	1870	8,583.00
17001853RS	SF1436-33 Split Wing	2271	6,398.00
17001851RS	SF1436-38 Split Wing	2456	8,583.00

1436 SERIES THREE SECTION FLEXIBLE DISCS

ORDER CODE	DESCRIPTION	APPROX. WEIGHT (LBS)	LIST PRICE

3 ROW COIL TINE FINISHING HARROWS - HEAVY DUTY

Spring Loaded Drag Arms with all Required Hardware and Mounting Brackets

Three Rows of 1/2" x 22" Coil Tines on 12" Centers, 4" Spacing Overall, with Angle Adjustment and Backup Protection

13" Spacing Between Rows

MODEL	LEFT WING	CENTER	RIGHT WING
SF1436-21	6'	10'	6'
SF1436-24	8'	8'	8'
SF1436-27	10'	8'	10'
SF1436-29	10'	10'	10'
SF1436-31	10'	6' 6'	10'
SF1436-33	10'	6' 8'	10'
SF1436-36	10'	8' 8'	10'
SF1436-33SW	6' 6"	6 '8"	6' 6"
SF1436-38SW	6 '8'	6" 6	6' 8"

17001843RS	SF1436-21	1305	7,343.00
17001845RS	SF1436-24	1540	7,373.00
17001847RS	SF1436-27	1705	7,782.00
17001849RS	SF1436-29	2150	7,926.00
17001819RS	SF1436-31	1850	9,539.00
17001817RS	SF1436-33	2455	9,597.00
17001815RS	SF1436-36	2555	11,746.00
17001852RS	SF1436-33 Split Wing	2895	11,142.00
17001850RS	SF1436-38 Split Wing	2903	12,204.00

CONVERSION KITS

53024RS	Conversion Spring to Hydraulic Down Pressure Kit (1436-21)	2,700.00
53025RS	Conversion Spring to Hydraulic Down Pressure Kit (1436-24)	2,700.00
53026RS	Conversion Spring to Hydraulic Down Pressure Kit (1436-27)	2,700.00
53027RS	Conversion Spring to Hydraulic Down Pressure Kit (1436-29)	2,700.00
53028RS	Conversion Spring to Hydraulic Down Pressure Kit (1436-31)	2,700.00
53029RS	Conversion Spring to Hydraulic Down Pressure Kit (1436-33)	2,700.00
53030RS	Conversion Spring to Hydraulic Down Pressure Kit (1436-36)	2,700.00
53089RS	Conversion Spring to Hydraulic Down Pressure Kit (1436-33SW)	4,000.00
53090RS	Conversion Spring to Hydraulic Down Pressure Kit (1436-38SW)	4,000.00

1436 SERIES THREE SECTION FLEXIBLE DISCS

ORDER CODE	DESCRIPTION	APPROX. WEIGHT (LBS)	LIST PRICE

Reel Finishing Attachments

For 21'

17001830RS	14" Flat Bar Reel Finishing Attachment	1660	7,505.00
17001831RS	14" Round Bar Reel Finishing Attachment	1775	8,023.00
17001832RS	11" Flat Bar Reel Finishing Attachment	1470	7,195.00
17001857RS	14" Flat Bar Hydraulic Reel Finishing Attachment	1860	10,205.00
17001858RS	14" Round Bar Hydraulic Reel Finishing Attachment.	1975	10,723.00
17001856RS	11" Flat Bar Hydraulic Reel Finishing Attachment	1670	9,895.00

For 24'

17001833RS	14" Flat Bar Reel Finishing Attachment	1910	8,572.00
17001834RS	14" Round Bar Reel Finishing Attachment	2040	9,168.00
17001835RS	11" Flat Bar Reel Finishing Attachment	1675	8,199.00
17001860RS	14" Flat Bar Hydraulic Reel Finishing Attachment	2110	11,272.00
17001861RS	14" Round Bar Hydraulic Reel Finishing Attachment.	2240	11,868.00
17001859RS	11" Flat Bar Hydraulic Reel Finishing Attachment	1875	10,899.00

For 27'

17001836RS	14" Flat Bar Reel Finishing Attachment	2380	9,643.00
17001837RS	14" Round Bar Reel Finishing Attachment	2525	10,314.00
17001838RS	11" Flat Bar Reel Finishing Attachment	2130	9,224.00
17001863RS	14" Flat Bar Hydraulic Reel Finishing Attachment	2580	12,343.00
17001864RS	14" Round Bar Hydraulic Reel Finishing Attachment.	2725	13,014.00
17001862RS	11" Flat Bar Hydraulic Reel Finishing Attachment	2330	11,924.00

For 29'

17001839RS	14" Flat Bar Reel Finishing Attachment	2475	10,358.00
17001840RS	14" Round Bar Reel Finishing Attachment	2635	11,079.00
17001841RS	11" Flat Bar Reel Finishing Attachment	2205	9,576.00
17001866RS	14" Flat Bar Hydraulic Reel Finishing Attachment	2675	13,058.00
17001867RS	14" Round Bar Hydraulic Reel Finishing Attachment.	2835	13,779.00
17001865RS	11" Flat Bar Hydraulic Reel Finishing Attachment	2405	12,276.00

For 31'

17001821RS	14" Flat Bar Reel Finishing Attachment	2490	10,611.00
17001822RS	14" Round Bar Reel Finishing Attachment	2650	10,871.00
17001823RS	11" Flat Bar Reel Finishing Attachment	2230	9,835.00
17001869RS	14" Flat Bar Hydraulic Reel Finishing Attachment	2690	13,311.00
17001870RS	14" Round Bar Hydraulic Reel Finishing Attachment.	2850	13,571.00
17001868RS	11" Flat Bar Hydraulic Reel Finishing Attachment	2430	12,535.00

1436 SERIES THREE SECTION FLEXIBLE DISCS

ORDER CODE	DESCRIPTION	APPROX. WEIGHT (LBS)	LIST PRICE
Reel Finishing Attachments - Continued			
For 33'			
17001824RS	14" Flat Bar Reel Finishing Attachment	2655	10,871.00
17001825RS	14" Round Bar Reel Finishing Attachment	2830	11,078.00
17001826RS	11" Flat Bar Reel Finishing Attachment	2395	10,094.00
17001872RS	14" Flat Bar Hydraulic Reel Finishing Attachment	2855	13,571.00
17001873RS	14" Round Bar Hydraulic Reel Finishing Attachment.	3030	13,778.00
17001871RS	11" Flat Bar Hydraulic Reel Finishing Attachment	2595	12,794.00
For 36'			
17001827RS	14" Flat Bar Reel Finishing Attachment	2670	11,232.00
17001828RS	14" Round Bar Reel Finishing Attachment	2850	11,388.00
17001829RS	11" Flat Bar Reel Finishing Attachment	2370	10,457.00
17001875RS	14" Flat Bar Hydraulic Reel Finishing Attachment	2870	13,932.00
17001876RS	14" Round Bar Hydraulic Reel Finishing Attachment.	3050	14,088.00
17001874RS	11" Flat Bar Hydraulic Reel Finishing Attachment	2570	13,157.00
For 33’ Split-Wing			
17001782RS	14" Flat Bar Reel Finishing Attachment		10,871.00
17001783RS	14" Round Bar Reel Finishing Attachment		11,078.00
17001784RS	11" Flat Bar Reel Finishing Attachment		10,094.00
For 38’ Split-Wing			
17001771RS	14" Flat Bar Reel Finishing Attachment		11,232.00
17001772RS	14" Round Bar Reel Finishing Attachment		11,388.00
17001773RS	11" Flat Bar Reel Finishing Attachment		10,457.00
Miscellaneous			
19068RS	Hitch, Rear Tow Assembly for 21’-29’ and 33’ Split-Wing	350	1,039.00
19069RS	Hitch, Rear Tow Assembly for 31’-36’ and 38’ Split-Wing	350	1,039.00
2500195RS	Lights/Hydraulic Tow Package	40	328.00
18663BS	Gang Wrench, 2 3/4" Spacing	35	89.00

1444 and 1544 SERIES FOUR SECTION FLEXIBLE TANDEM DISCS

F.O.B. Beloit, KS

STANDARD CONFIGURATION

6 11L x 15, 12 Ply Tubeless Tires with Six Bolt Wheels and 2” Slip in Spindles on Center Sections of 30’ and 33’
4 11L x 15, 8 Ply Tubeless Tires with Six Bolt Wheels and 2” Slip in Spindles on Wings of 30’ and 33’
6 12.5L x 15 (GY - FI) Load F, Tires with Eight Bolt Wheels and 2-1/4” Slip in Spindles on Center Sections of 36’ and 40’
4 12.5L x 15, 12 Ply Tubeless Tires with Eight Bolt Wheels and 2-1/4” Slip in Spindles on wings of 36’ and 40’
12 12.5L x 15 (GY - FI) Load F, Tires with Eight Bolt Wheels and 2-1/4” Slip in Spindles on 42’ and 45’
6 Walking Tandems in all Locations on the 1544
4 Walking Tandems on the 1444
2 Front Mounted Single Point Depth Control with Rephasing Lift System
1 Cast Single Lip Hitch with 2" Oblong Hole (4781GS)
2 Heavy-duty Gauge Wheels with 8.00 x 10 New Tires and Tubes, Five Bolt Hubs and Triple Lip Seals
Hi-strength 1-3/4" Round Stress Proof Gang Shafts
Triple Sealed Greaseable Trunnion Bearings
C-Flex Bearing Standards
4" wide Rigid Scraper Assemblies Mounted to C-Flex
2 Tongue Jacks
Safety Equipment Including: Light Kit, SMV Emblem, and Safety Chain
Standard Mechanical Self-leveling System on 1444
Standard Mechanical Self-leveling System on 1544

1444 AND 1544 SERIES
FOUR SECTION FLEXIBLE TANDEM DISCS

DISC MODEL	SF1444-30	SF1444-33	SF1444-36	SF1444-40	SF1544-42	SF1544-45
TRANSPORT WIDTH	18’ 2”	18’,2”	19’ 9”	19’ 9”	22’ 2"	22’ 2"
TRANSPORT HEIGHT	12’ 1”	13’ 2”	13’ 8”	15’ 4”	14’ 7"	15’ 8"
FRAME SIZE	8-7-7-8	10-7-7-10	10-8-8-10	12-8-8-12	12-9-9-12	13½-9-9-13½
STANDARD GANGS Front / Rear	12/12	12/12	16/14	20/14	18/20	20/20
8½” x 8½” NUMBER OF DISC BLADES Front / Rear	42/44	44/48	48/52	54/58	8¾” 60/62	8¾” 64/66

1444 and 1544 SERIES FOUR SECTION FLEXIBLE TANDEM DISCS

These prices reflect the standard configuration. If items other than those listed in the standard configuration are ordered, then the quoted price below will change.

For Quotation Purposes Only – Please Order Items from the Groups on the Next Pages

MODEL NUMBER	CUTTING WIDTH	BLADE DIAMETER	EST. WEIGHT	¼" THICK (4 GA) ROLLABLE BORON BLADES	¼" THICK (4 GA) BLADES	6 GAUGE BLADES
SMOOTH BLADES – 8½" BLADE SPACING						
SF1444-30	30' 6"	22"	17454		66,355.00	N/A
SF1444-30	30' 6"	24"	17916	69,086.00	67,577.00	66,208.00
SF1444-30	30' 6"	26"	18362		71,135.00	N/A
SF1444-33	33' 4"	22"	18467		73,718.00	N/A
SF1444-33	33' 4"	24"	18984	76,618.00	75,004.00	73,527.00
SF1444-33	33' 4"	26"	19461		78,981.00	N/A
SF1444-36	36'	22"	21632		84,199.00	N/A
SF1444-36	36'	24"	22193	87,430.00	85,675.00	83,980.00
SF1444-36	36'	26"	22712		89,842.00	N/A
SF1444-40	40'	22"	23510		92,790.00	N/A
SF1444-40	40'	24"	24137	96,292.00	94,326.00	92,572.00
SF1444-40	40'	26"	24718		99,131.00	N/A
SMOOTH BLADES – 8-3/4" BLADE SPACING						
SF1544-42	42' 7"	22"	26590		113,612.00	N/A
SF1544-42	42' 7"	24.51"/24.38"	27200	117,479.00	115,336.00	113,252.00
SF1544-45	45' 4"	22"	28325		112,067.00	N/A
SF1544-45	45' 4"	24.51"/24.38"	28975	116,236.00	113,953.00	111,712.00

**** Estimated weight is based on ¼" thick blades.***

1444 and 1544 SERIES FOUR SECTION FLEXIBLE TANDEM DISCS

ORDER CODE	DESCRIPTION	APPROX. WEIGHT (LBS)	LIST PRICE

Select One Order Code from Each Group, 01 through 04.

Group 01 Base Machine

SF1444-30	14443000, 30' Four Section Flexible Tandem Disc	10317	43,388.00
SF1444-33	14443300, 33' Four Section Flexible Tandem Disc	10685	47,856.00
SF1444-36	14443600, 36' Four Section Flexible Tandem Disc	12958	56,110.00
SF1444-40	14444000, 40' Four Section Flexible Tandem Disc	14002	62,216.00
SF1544-42	15444200, 42' Four Section Flexible Tandem Disc	15061	79,765.00
SF1544-45	15444500, 45' Four Section Flexible Tandem Disc	16049	76,950.00

Group 02 Gangs SMOOTH BLADES

SF1444-30

12301488S	22" 4 Gauge, C-Flex	6338	18,349.00
12301490S	24" 6 Gauge, C-Flex	6800	18,202.00
12301492S	24" 4 Gauge, C-Flex	6800	19,571.00
12301503S	26" 4 Gauge, C-Flex	7246	23,129.00
12301641S	24" 4 Gauge, C-Flex Rollable Boron	6800	21,080.00

SF1444-33

12301489S	22" 4 Gauge, C-Flex	6983	21,244.00
12301491S	24" 6 Gauge, C-Flex	7500	21,053.00
12301493S	24" 4 Gauge, C-Flex	7500	22,530.00
12301504S	26" 4 Gauge, C-Flex	7977	26,507.00
12301642S	24" 4 Gauge, C-Flex Rollable Boron	7500	24,144.00

SF1444-36

12301499S	22" 4 Gauge, C-Flex	7639	22,443.00
12301498S	24" 6 Gauge, C-Flex	8200	22,224.00
12301497S	24" 4 Gauge, C-Flex	8200	23,919.00
12301505S	26" 4 Gauge, C-Flex	8719	28,086.00
12301643S	24" 4 Gauge, C-Flex Rollable Boron	8200	25,674.00

SF1444-40

12301502S	22" 4 Gauge, C-Flex	8473	24,928.00
12301501S	24" 6 Gauge, C-Flex	9100	24,710.00
12301500S	24" 4 Gauge, C-Flex	9100	26,464.00
12301506S	26" 4 Gauge, C-Flex	9681	31,269.00
12301644S	24" 4 Gauge, C-Flex Rollable Boron	9100	28,430.00

SF1544-42

12301135S	22" 4 Gauge, C-Flex	11407	32,605.00
12301129S	24.38" 6 Gauge, C-Flex	12017	32,245.00
12301532S	24" 4 Gauge, C-Flex	12365	34,329.00
12301645S	24" 4 Gauge, C-Flex Rollable Boron	12365	36,472.00

SF1544-45

12301126S	22" 4 Gauge, C-Flex	12154	33,875.00
12301120S	24.38" 6 Gauge, C-Flex	12804	33,520.00
12301533S	24" 4 Gauge, C-Flex	13121	35,761.00
12301646S	24" 4 Gauge, C-Flex Rollable Boron	13121	38,044.00

1444 and 1544 SERIES FOUR SECTION FLEXIBLE TANDEM DISCS

ORDER CODE	DESCRIPTION	APPROX. WEIGHT (LBS)	LIST PRICE

Select One Order Code from Each Group, 01 through 04.

Group 03 Tires

MODEL	ORDER QUANTITY	CENTER	ORDER QUANTITY	WINGS
SF1444-30	6	3587YS	4	3058YS or 3587YS
SF1444-33	6	3587YS	4	3058YS or 3587YS
SF1444-36	6	5555YS	4	10323YS or 5555YS
SF1444-40	6	5555YS	4	10323YS or 5555YS
SF1544-42	In Base on SF1544-42 & 1544-45 = Qty 12, 12.5L x 15, GY - FI, Load Range F Tires With 15” x 10” – 8 Bolt Wheels			
SF1544-45				

3058YS	(1) New 8 Ply, 11L Tubeless Tire, 6 Bolt Wheel (15" x 10") . .	65	319.00
3587YS	(1) New 12 Ply, 11L Tubeless Tire, 6 Bolt Wheel (15" x 10") .	74	350.00
10323YS	(1) New 12 Ply, 12.5L Tire, 8 Bolt Wheel (15" x 10")	85	324.00
5555YS	(1) New 12.5L x 15, GY - FI, Load Range F Tire . . . . . 8 Bolt Wheel (15" x 10")	104	518.00

Group 04 Levelers

30’ through 40’ Discs

2500134RS	Self-Leveling Hitch with Manual Screw Adjustment	95	1,242.00
2500135RS	Hydraulic Self-Leveling System with Level Indicator	155	3,144.00

42’ and 45’ Discs

2500087RS	Self-Leveling Hitch with Manual Screw Adjustment	122	1,242.00
2500088RS	Hydraulic Self-Leveling System with Level Indicator	309	3,099.00

OPTIONAL EQUIPMENT - For Current Machines ONLY

Rear Tow Hitch for SF1544

6945BS	Rear Tow Hitch with Hitch Slide and Ball Joint	55	387.00
6946BS	Rear Tow Hitch with Ball Joint	34	189.00
18663BS	Gang Wrench, 2-3/4"	20	89.00
12634PLS	Wiring Harness to Plug Soil Conditioner Lights into . . . . . Implement Lights		223.00

1444 and 1544 SERIES FOUR SECTION FLEXIBLE TANDEM DISCS

ORDER CODE	DESCRIPTION	APPROX. WEIGHT (LBS)	LIST PRICE

THREE ROW COIL TINE FINISHING HARROWS FOR 1444 & 1544 SERIES DISCS

Spring Loaded Drag Arms with all Required Hardware and Mounting Brackets
Three Rows of 3/8" x 16" Coil Tines on 7½" Centers, 2½" Spacing Overall, with Angle Adjustment and Backup Protection
15" Spacing Between Rows

MODEL	LEFT WING	CENTER	RIGHT WING
SF1444-30	97 ½"	82 ½" 82 ½"	97 ½"
SF1444-33	52 ½" 52 ½"	82 ½" 82 ½"	52 ½" 52 ½"
SF1444-36	52 ½" 52 ½"	97 ½" 97 ½"	52 ½" 52 ½"
SF1444-40	67 ½" 67 ½"	97 ½" 97 ½"	67 ½" 67 ½"
SF1544-42	52 ½" 82 ½"	52 ½" 52 ½" 52 ½" 52 ½"	82 ½" 52 ½"
SF1544-45	67 ½" 82 ½"	52 ½" 52 ½" 52 ½" 52 ½"	82 ½" 67 ½"

17001522RS	SF1444-30	1452	6,631.00
17001523RS	SF1444-33	1737	6,786.00
17001524RS	SF1444-36	1592	6,908.00
17001525RS	SF1444-40	1854	8,060.00
17001357RS	SF1544-42	2181	9,435.00
17001358RS	SF1544-45	2252	9,590.00

Note: 1443 Attachments Will Not Adapt To Model 1444.

3 ROW COIL TINE FINISHING HARROWS - HEAVY DUTY

Spring Loaded Drag Arms with all Required Hardware and Mounting Brackets
Three Rows of 1/2" x 22" Coil Tines on 12" Centers, 4" Spacing Overall, with Angle Adjustment and Backup Protection
13" Spacing Between Rows

17001763RS	SF1444-30		10,308.00
17001764RS	SF1444-33		10,699.00
17001765RS	SF1444-36		11,589.00
17001766RS	SF1444-40		12,927.00
17001762RS	SF1544-42		14,263.00
17001755RS	SF1544-45	3150	14,375.00

THREE ROW SPIKE DRAG FOR 1544 SERIES DISCS

All Required Hardware and Mounting Brackets
Three Rows of 3/4" x 11" Square Spikes on 9" Centers, 3" Spacing Overall

MODEL	LEFT WING	CENTER	RIGHT WING
SF1544-42	5' 6 ½'	9 ½' 9 ½'	6 ½' 5'
SF1544-45	6 ½' 6 ½'	9 ½' 9 ½'	6 ½' 6 ½'

17001047RS	SF1544-42	2377	8,655.00
17001048RS	SF1544-45	2455	8,830.00

1550 FIVE SECTION FLEXIBLE DISCS

F.O.B. Beloit, KS

STANDARD CONFIGURATION

8.75” Disc Blade Spacing with 18° Front and Rear Gang Angles
6 380/55 x 16.5 Tubeless Tire, Load Range F with 15” x 10” Eight Bolt Wheels and 2-3/4” Slip in Spindles (Centers)
8 12.5L x 15 12 Ply Tubeless Tires with 15” x 10” Six Bolt Wheels and 2” Slip in Spindles (Wings)
High Strength 1-3/4” Round Stress Proof Gang Shafts
Triple Sealed, Greaseable, Trunnion Style Gang Bearings
C-Flex Bearing Standards (1-1/4” x 2-1/2”)
4" wide Rigid Scraper Assemblies Mounted to C-Flex Standards
Maintenance Free Lift System with 5-1/2” Lift Axle on Center Section
1 CAT 5 Hitch 2” or 2-3/4” Pin
Rephasing Lift System with Single Point Depth Control
Twin Leveler System with Adjusting Hydraulic Cylinders
2 Walking Triples with Greaseable Tapered Roller Bearings (Center)
4 Walking Tandems with Greaseable Tapered Roller Bearings (Wings)
4 Heavy-duty Gauge Wheels with 20.5 x 8 -10 New Tires and Tubes, Five Bolt Hub and Triple Lip Seal
1 Adjustment Wrench
1 Tongue Jack
Safety Equipment Including: Light Kit, SMV Emblem and Safety Tow Chain

MODEL NUMBER	TRANSPORT WIDTH	TRANSPORT HEIGHT	GANG SHAFTS	GANG STANDARDS FRONT / REAR	DISC BLADES FRONT / REAR	FRAME SIZE
1550-46	18' 2"	13' 11"	12	20/20	66/68	7'-10'-13'-10'-7'
1550-48	18' 2"	13' 11"	12	20/20	70/72	8.5'-10'-13'-10'-8.5'

These prices reflect the standard configuration. If items other than those listed in the standard configuration are ordered, then the quoted price below will change.

For Quotation Purposes Only – Please Order Items from the Groups on the Next Pages

MODEL NUMBER	CUTTING WIDTH	BLADE DIAMETER	EST. WEIGHT	¼” THICK (4 GA) BORON BLADES	¼” THICK (4 GA) ROLLABLE BORON BLADES	6 GAUGE BLADES
SMOOTH BLADES – 8-3/4” BLADE SPACING						
SF1550-46	46"	24"	31302	119,023.00	120,329.00	117,886.00
SF1550-48	48”	24"	33300	123,563.00	125,268.00	122,427.00

1550 FIVE SECTION FLEXIBLE DISCS

ORDER CODE	DESCRIPTION	APPROX. WEIGHT (LBS)	LIST PRICE

Select One Order Code from Each Group, 01 through 05.

Group 01 Base Machine

15504600	46' with 24 x 1/4 inch Blades and Standard Configuration . . .		59,421.00
15504800	48' with 24 x 1/4 inch Blades and Standard Configuration . . .		59,815.00

Group 02 Gangs Smooth Blades, 8-3/4" Blade Spacing

SF1550-46

12301635S	24" 6 Gauge, C-Flex		37,605.00
12301632S	24" 4 Gauge, C-Flex		38,742.00
12301633S	24" 4 Gauge, C-Flex with Rollable Boron Blades		40,048.00

SF1550-48

12301634S	24" 6 Gauge. C-Flex		41,752.00
12301630S	24" 4 Gauge, C-Flex		42,888.00
12301631S	24" 4 Gauge, C-Flex with Rollable Boron Blades		44,593.00

Group 03 Center Lifts

7500493RS	Lift Assembly, Center, 2-3/4" Spindle, Walking Tandem . . .		7,941.00

Group 04 Wing Lifts

7500494RS	Lift Assembly, Wings, 2" Spindle, Walking Tandem		4,949.00

Group 05 Tires (order Qty 8 for Wings and 6 for Center)

3588S	(1) New 12 Ply, 12.5L x 15 Tubeless Tire for Wings	80	367.00
16949YS	New 380/55R-16.5 Tubeless Tire, 8 Bolt Wheel	154	839.00

OPTIONAL EQUIPMENT

13767RS	Rear Tow Hitch with Hitch Slide and Ball Joint	199	1,008.00
2500182RS	Rear Tow Hitch Hydraulic Package	45	395.00
18663BS	Gang Wrench, 2-3/4"	35	89.00
12634PLS	Wiring Harness to Plug Soil Conditioner Lights into Implement Lights		223.00

3 ROW COIL TINE FINISHING HARROWS - HEAVY DUTY

Spring Loaded Drag Arms with all Required Hardware and Mounting Brackets
Three Rows of 1/2" x 22" Coil Tines on 12" Centers, 4" Spacing Overall, with Angle Adjustment and Backup Protection
13" Spacing Between Rows

MODEL	OUTER LEFT WING	INNER LEFT WING	CENTER	INNER RIGHT WING	OUTER RIGHT WING
SF1550-46	8'	10'	6' & 6'	10'	8'
SF1550-48	8'	10'	6' & 8'	10'	8'

17001754RS	SF1550-46	3177	14,289.00
17001753RS	SF1550-48	3236	14,515.00

1710 and 1730 SERIES OFFSET DISCS

F.O.B. Wahpeton, ND

STANDARD CONFIGURATION

1710
2 11L x 15 Tires with 6 Bolt Hubs (1710-10)
4 12.5L x 15 Tires with 8 Bolt Hubs
2 Depth Collar Kit
2 Lift Cylinders 4" x 12"
1 Cast Single Lip Hitch for 2-1/4" Diameter Pin
2 Adjustment Wrenches
1 Tongue Jack
214 Series Re-lube Gang Bearings
High Strength 1-15/16" Gang Shafts
Disc Gang Angle Adjustment
Solid Mount Single Scrapers
Level Lift Hitch
Warning Light Kit, Complete with Wiring, SMV Emblem and Safety Chain

1730
4 12.5L x 15 Tires with 8 Bolt Hubs
4 Depth Collar Kit
2 Main Lift Cylinders 4.5" x 12"
2 Wing Lift Cylinders 4" x 12"
2 Wing Fold Cylinders 5" x 24" with Over Center Wing Lock
1 Cast Single Lip Hitch for 2-1/4" Diameter Pin
2 Adjustment Wrenches
1 Tongue Jack
214 Series Re-lube Gang Bearings
High Strength 1-15/16" Gang Shafts
Disc Gang Angle Adjustment
Solid Mount Single Scrapers
Level Lift Hitch
Warning Light Kit, Complete with Wiring, SMV Emblem and Safety Chain

1700 SERIES RIGID 11" BLADE SPACING					
Model Number	**SF1710-10**	**SF1710-12**	**SF1710-14**	**SF1710-16**	**SF1710-18**
Cutting Width	11' 0"	12' 8"	14' 6"	16' 2"	17' 11"
Transport Width	12' 7"	14' 4"	15' 3"	17' 10"	19' 7"
Transport Height	7' 0"	7' 0"	7' 0"	7' 0"	7' 0"
Number of Blades F®	12 / 13	14 / 15	16 / 17	18 / 19	20 / 21

1700 SERIES FOLDING MODELS 11" BLADE SPACING			
Model Number	**SF1730-22**	**SF1730-24**	**SF1730-26**
Cutting Width	21' 5"	23' 2"	24' 11"
Transport Width	11' 9"	11' 9"	11' 9"
Transport Height	12' 10"	13' 6"	9' 6"
Number of Blades F®	24 / 25	26 / 27	28 / 29

1700 SERIES 13" BLADE SPACING				
Model Number	**SF1710-12**	**SF1710-14**	**SF1710-16**	**SF1730-18**
Cutting Width	12' 10"	14' 11"	16' 11"	18' 11"
Transport Width	14' 8"	16' 6"	18' 6"	20' 7"
Transport Height	7' 0"	7' 0"	7' 0"	14' 7"
Number of Blades F®	12 / 13	14 / 15	16 / 17	18 / 19

1710 and 1730 SERIES OFFSET DISCS

ORDER CODE	CUTTING WIDTH	BLADE DIAMETER	APPROX. WEIGHT (LBS)	5/16" THICK BLADES PLAIN	5/16" THICK BLADES NOTCHED	NOTCHED FRONT PLAIN REAR
For Quotation Purposes Only – Please Order Items from the Groups on the Next Pages						
Rigid Bearing Gangs - 11" Blade Spacing (Non-Folding Models)						
SF1710-12	12' 8"	28"	10,329	37,804.00	38,268.00	38,028.00
SF1710-12	12' 8"	30"	10,329	38,761.00	39,283.00	39,013.00
SF1710-14	14' 6"	28"	10,976	40,029.00	40,557.00	40,285.00
SF1710-14	14' 6"	30"	10,976	41,118.00	41,712.00	41,406.00
SF1710-16	16' 2"	28"	11,526	41,266.00	41,858.00	41,554.00
SF1710-16	16' 2"	30"	11,526	42,487.00	43,153.00	42,811.00
SF1710-18	17' 11"	28"	12,271	43,983.00	44,639.00	44,303.00
SF1710-18	17' 11"	30"	12,271	45,336.00	46,074.00	45,696.00
Rigid Bearing Gangs - 11" Spacing (Folding Models)						
SF1730-22	21' 5"	28"	20,960	70,558.00	71,342.00	70,942.00
SF1730-22	21' 5"	30"	20,960	72,175.00	73,057.00	72,607.00
SF1730-24	23' 2"	28"	22,060	75,872.00	76,720.00	76,288.00
SF1730-24	23' 2"	30"	22,060	77,621.00	78,575.00	78,089.00
SF1730-26	24' 11"	28"	22,860	77,232.00	78,144.00	77,680.00
SF1730-26	24' 11"	30"	22,860	79,113.00	80,139.00	79,617.00
Spring Cushion Gangs - 11" Blade Spacing (Non-Folding Models)						
SF1710-10	11' 0"	28"	11,029	40,771.00	41,171.00	40,963.00
SF1710-10	11' 0"	30"	11,029	41,596.00	42,046.00	41,812.00
SF1710-12	12' 8"	28"	12,550	45,343.00	45,807.00	45,567.00
SF1710-12	12' 8"	30"	12,550	46,300.00	46,822.00	46,552.00
SF1710-14	14' 6"	28"	13,830	49,916.00	50,444.00	50,172.00
SF1710-14	14' 6"	30"	13,830	51,005.00	51,599.00	51,293.00
SF1710-16	16' 2"	28"	14,720	52,264.00	52,856.00	52,552.00
SF1710-16	16' 2"	30"	14,720	52,792.00	54,151.00	52,520.00
SF1710-18	17' 11"	28"	15,248	53,870.00	54,526.00	54,190.00
SF1710-18	17' 11"	30"	15,248	55,223.00	55,961.00	55,583.00
Spring Cushion Gangs - 13" Blade Spacing (Non-Folding Models)						
SF1710-12	12' 10"	30"	12,862	45,343.00	45,743.00	45,535.00
SF1710-14	14' 11"	30"	13,762	49,916.00	50,380.00	50,140.00
SF1710-16	16' 11"	30"	14,594	52,264.00	52,792.00	52,520.00
SF1710-18	18' 11"	30"	15,271	53,870.00	54,462.00	54,158.00

1710 and 1730 SERIES OFFSET DISCS

ORDER CODE	DESCRIPTION	APPROX. WEIGHT (LBS)	LIST PRICE

Select One Order Code from Each Group, 01 through 03.

Group 1 Base Machine

Rigid Bearing Gangs - 11" Blade Spacing (Non-Folding Models)

245498RAW	SF1710-12 with 28" x 5/16" Blades.		36,585.00
109113RAW	SF1710-14 with 28" x 5/16" Blades.		38,810.00
245708RAW	SF1710-16 with 28" x 5/16" Blades.		40,047.00
245718RAW	SF1710-18 with 28" x 5/16" Blades.		42,764.00

Rigid Bearing Gangs - 11" Blade Spacing (Folding Models)

246993RAW	SF1730-22 with 28" x 5/16" Blades.		69,339.00
246994RAW	SF1730-24 with 28" x 5/16" Blades.		74,653.00
246995RAW	SF1730-26 with 28" x 5/16" Blades.		76,013.00

Spring Cushion Gangs - 11" Blade Spacing (Non-Folding Models)

245440RAW	SF1710-10 with 28" x 5/16" Blades.		39,552.00
244066RAW	SF1710-12 with 28" x 5/16" Blades.		44,124.00
109102RAW	SF1710-14 with 28" x 5/16" Blades.		48,697.00
244067RAW	SF1710-16 with 28" x 5/16" Blades.		51,045.00
244069RAW	SF1710-18 with 28" x 5/16" Blades.		52,651.00

Spring Cushion Gangs - 13" Blade Spacing (Non-Folding Models)

244095RAW	SF1710-12 with 30" x 5/16" Blades		44,124.00
244604RAW	SF1710-14 with 30" x 5/16" Blades		48,697.00
109103RAW	SF1710-16 with 30" x 5/16" Blades		51,045.00
244611RAW	SF1710-18 with 30" x 5/16" Blades		52,651.00

Group 02 Blades - Order one per Chart on page 34

106075AW	Blade, 28" x 5/16" Plain (in base on 11" Blade Spacing)	57.9	No Charge
107773AW	Blade, 28" x 5/16" Notched (for 11" Blade Spacing)	52.7	16.00
107774AW	Blade, 30" x 5/16" Plain (for 11" Blade Spacing)	65.8	33.00
107775AW	Blade, 30" x 5/16" Notched (for 11" Blade Spacing)	60.5	51.00
106021AW	Blade, 30" x 5/16" Plain (in base on 13" Blade Spacing)	65.8	No Charge
108044AW	Blade, 30" x 5/16" Notched (for 13" Blade Spacing)	60.5	16.00

Group 03 Hydraulic Leveler - in price of built up units on page 35 (Optional)

356739AW	Hydraulic Leveler for SF1710.	1,219.00
356737AW	Hydraulic Leveler for SF1730.	1,219.00

1710 and 1730 SERIES OFFSET DISCS

ORDER CODE	DESCRIPTION	APPROX. WEIGHT (LBS)	LIST PRICE

OPTIONAL EQUIPMENT

Configuration	Model	Front and Rear Bearings Right/Left	Total Number of Blades	Scrapers Bearing Standard Right/Left	Scrapers Clean Spool Right/Left Front/Rear	Scrapers Rotary Front/Rear Total	Blades Notched Front Plain Rear
Rigid Bearing Gangs 11" Spacing	SF1710-12	5/5	29	5/5	12/13	26	14/15
	SF1710-14	6/6	33	6/6	14/15	30	16/17
	SF1710-16	7/6	37	7/6	16/17	34	18/19
	SF1710-18	8/8	41	8/8	18/19	38	20/21
	SF1730-22	9/8	49	9/8	21/22	46	24/25
	SF1730-24	11/10	53	11/10	23/24	50	26/27
	SF1730-26	11/10	57	11/10	25/26	54	28/29
Spring Cushion Gangs 11" Spacing	SF1710-10	6/6	25	6/4	10/11	22	12/13
	SF1710-12	6/6	29	6/6	12/13	26	14/15
	SF1710-14	7/6	33	7/6	13/15	30	16/17
	SF1710-16	9/8	37	9/8	15/17	34	18/19
	SF1710-18	9/8	41	9/8	17/19	38	20/21
Spring Cushion Gangs 13" Spacing	SF1710-12	6	25	6/6	10/11	23	12/13
	SF1710-14	6	29	6/6	11/13	27	14/15
	SF1710-16	7	33	7/7	13/15	31	16/17
	SF1710-18	8	37	8/8	15/17	35	18/19

SCRAPER OPTIONS (in Lieu of Standard Solid Mount Single Scrapers)

Order Right and Left Hand for a Complete Set (Order 1 per Bearing Indicated for the Right and Left from Above Chart)

107444-11RAW	Scraper, RH for Bearing Standard, for 11" Blade Spacing . .	23	72.00
107444-11LAW	Scraper, LH for Bearing Standard, for 11" Blade Spacing . .	23	72.00
107444-13RAW	Scraper, RH for Bearing Standard, for 13" Blade Spacing . .	23	72.00
107444-13LAW	Scraper, LH for Bearing Standard, for 13" Blade Spacing . .	23	72.00
108571AW	Scraper, RH to Clean Spool and Blade . . . . . (Order one per Front Blade)	8	31.00
108572AW	Scraper, LH to Clean Spool and Blade . . . . . (Order one per Rear Blade)	8	31.00
108063AW	Scraper, Rotary (Order one per Blade).	9	114.00

Note: To order the Rotary Scraper options refer to page 1000-37 for the number of blades on the front and rear gangs. To order Rotary Scrapers for the front & rear gangs OR the rear gang only; reduce the blade count (order quantity) by three (3).

Bearing Options

357470AW	Bearing Guard (Order one for each Bearing)	8	43.00
104884AW	Washer, Bearing Guard (Order two for each Bearing)	.41	4.00

1710 and 1730 SERIES OFFSET DISCS

ORDER CODE	DESCRIPTION	APPROX. WEIGHT (LBS)	LIST PRICE

OPTIONAL EQUIPMENT

Miscellaneous Options

351803AW	Rear Hitch, Single Lip for 1" Dia Pin (12' to 18' models) . . .	58	258.00
351804AW	Rear Hitch, Double Lip for 1" Dia Pin (12' to 18' models) . .	80	258.00
350196AW	Rear Hitch, Single Lip for 1" Dia Pin (22' to 26' models) . . .	116	466.00
350197AW	Rear Hitch, Double Lip for 1" Dia Pin (22' to 26' models) . .	133	466.00
238778AW	Rear Hydraulic Extension Package (10' to 18')	27	478.00
247597AW	Rear Hydraulic Extension Package (22' to 26')	50	478.00
236099AW	Safety Light Extension	3	211.00
244654AW	Single Point Depth Control (For 1710 Only)	49	712.00

3 Row Heavy Duty Coil Tine Harrows

Spring Loaded Drag Arms with all Required Hardware and Mounting Brackets
Three rows of 5/8" x 26" Coil Tines on 12" Centers, 4" Spacing Overall, with Angle Adjustments and Backup Protection and 12" Spacing Between Rows

Model Number	Overlap Each Side	Harrow Section Size		Number of Mounting Arms
		6' 0"	8' 0"	
SF1710-14	10' 6"	N/A	2	2
SF1710-16	13' 0"	3	N/A	2
SF1710-18	15' 6"	2	1	4

245875AW	SF1710-14	1,130	4,655.00
245876AW	SF1710-16	1,356	5,615.00
245877AW	SF1710-18	1,536	6,304.00

2 Row Heavy Duty Coil Tine Harrow with Flat Bar Basket

Spring Loaded Drag Arms with all Required Hardware and Mounting Brackets
Two rows of 5/8" x 26" Coil Tines on 12" Centers, 6" Spacing Overall,
with Angle Adjustments and Backup Protection and 12" Spacing Between Rows
13" Diameter Basket with Eight 1/4" x 1-1/4" Flat Blades and Triple Lip Sealed Flange Bearings with Lube Fitting. Basket widths; 4.5', 6' and 7.5'

Model Number	Overlap Each Side	Harrow Section Size		Number of Mounting Arms
		6' 0"	8' 0"	
SF1710-14	10' 6"	N/A	2	2
SF1710-16	13' 0"	3	N/A	2
SF1710-18	15' 6"	2	1	4

246306AW	SF1710-14	1,455	7,055.00
246307AW	SF1710-16	1,804	9,093.00
246308AW	SF1710-18	1,996	9,915.00

1710HD SERIES OFFSET DISCS

F.O.B. Wahpeton, ND

STANDARD CONFIGURATION

2 385/65R 22.50 / used Tires with 10 Bolt Hubs (1710HD-10)
4 385/65R 22.50 / used Tires with 10 Bolt Hubs (1710HD-16)
2 Depth Collar Kit
2 Main Lift Cylinders 4.5” x 12”
1 Cast Single Lip Hitch for 2-1/4" Diameter Pin
2 Adjustment Wrenches
1 Tongue Jack
36" x .472" Notched Disc Blades
18" Disc Blade Spacing
Rigid Bearing Gangs
315 Series Re-lube Gang Bearings
Bearing Guards and Washers
High Strength 2-3/4" Gang Shafts
Disc Gang Angle Adjustment
Solid Mount Double Scrapers
Level Lift Hitch
Warning Light Kit, Complete with Wiring, SMV Emblem and Safety Chain

Model Number	SF1710HD-10	SF1710HD-16
Cutting Width	11' 9"	17' 6"
Transport Width	12' 9"	19' 3"
Transport Height	8' 4"	8' 4"
Number of Blade F®	8 / 8	12 / 12
Number of Bearings F®	4 / 4	6 / 6

These prices reflect the standard configuration

ORDER CODE	DESCRIPTION	APPROX. WEIGHT (LBS)	LIST PRICE
Group 01 Base Machine			
109132AW	SF1710HD-10 Heavy Duty Offset Disc, 11' 9" Cutting Width .	14,956	53,076.00
245782AW	SF1710HD-16 Heavy Duty Offset Disc, 17' 6" Cutting Width .	21,130	71,985.00
Group 02 Tires			
(1710HD-10)			
354824AW	(2) 385/65R 22.50 / Used Tires with 10 Bolt Hubs		In Base
354526AW	(2) 385/65R 22.50 / New Tires with 10 Bolt Hubs		1,230.00
(1710HD-16)			
354825AW	(4) 385/65R 22.50 / Used Tires with 10 Bolt Hubs		In Base
354527AW	(4) 385/65R 22.50 / New Tires with 10 Bolt Hubs		2,460.00

NOTE: SF1710HD-10 can be positioned on a trailer fully assembled yielding less than 12 feet wide.

1810 and 1830 SERIES TANDEM DISCS
F.O.B. Wahpeton, ND

STANDARD CONFIGURATION

4 12.5L x 15 Tires with 8 Bolt Hubs (1810)
8 385/65R 22.50 / used Tires with 8 Bolt Hubs (1830)
4 385/65R 22.50 / used Tires with 10 Bolt Hubs (center section 1830-34 and 1830-38)
1 Single Point Depth Control (1830)
4 Depth Collar Kit 1830
2 Depth Collar Kit 1810
2 Lift Cylinders 4” x 12” (1810)
2 Main Lift Cylinders 4.5” x 12” (1830)
2 Wing Lift Cylinders 5” x 36” (1830-22 through 1830-26)
4 Wing Lift Cylinders 5” x 36” (1830-30 through 1830-38)
1 Hydraulic Leveler
2 Adjustment Wrenches
1 Tongue Jack
214 Series Re-lube Gang Bearings
High Strength 1-15/16" Gang Shafts
Solid Mount Single Scrapers
Level Lift Hitch
1 Cast Single Lip Hitch for 2-1/4" Diameter Pin
Warning Light Kit, Complete with Wiring, SMV Emblem and Safety Chain

1810 SERIES RIGID FRAME, 11" BLADE SPACING			
Model Number	**SF1810-14**	**SF1810-16**	**SF1810-18**
Cutting Width	14’ 2’	15’ 10"	17’ 7"
Transport Width	15’ 10"	17’ 10"	19’ 10"
Transport Height	7’ 0"	7’ 0"	7’ 0"
Number of Blades F®	14 / 16	16 / 18	18 / 20

1830 SERIES FLEXIBLE FRAME, 11" BLADE SPACING						
Model Number	**SF1830-22**	**SF1830-24**	**SF1830-26**	**SF1830-30**	**SF1830-34**	**SF1830-38**
Cutting Width	22’ 10"	24’ 7"	26’ 4"	29’ 9"	33’ 3"	38’ 6"
Transport Width	13’ 11"	13’ 11"	14’ 10"	17’ 2"	15’ 10"	15’ 10"
Transport Height	12’ 10"	13’ 6"	14’ 2"	15’ 6"	15’ 9"	17’ 9"
Number of Blades F®	24 / 26	26 / 28	28 / 30	32 / 34	36 / 38	42 / 44

1810 SERIES RIGID FRAME, 13" BLADE SPACING		
Model Number	**SF1810-14**	**SF1810-16**
Cutting Width	14’ 4"	16’ 4"
Transport Width	15’ 11"	18’ 5"
Transport Height	7’ 0"	7’ 0"
Number of Blades F®	12 / 14	14 / 16

1830 SERIES FLEXIBLE FRAME, 13" BLADE SPACING					
Model Number	**SF1830-22**	**SF1830-26**	**SF1830-30**	**SF1830-34**	**SF1830-38**
Cutting Width	22’ 6"	26’ 8"	30’ 9"	34’ 11"	39’ 0"
Transport Width	13’ 11"	14’ 10"	17’ 2"	16’ 0"	16’ 0"
Transport Height	12’ 10"	14’ 2"	15’ 10"	15’ 9"	17’ 9"
Number of Blades F®	20 / 22	24 / 26	28 / 30	32 / 34	36 / 38

1810 and 1830 SERIES TANDEM DISC

ORDER CODE	CUTTING WIDTH	BLADE DIAMETER	APPROX. WEIGHT (LBS)	5/16" THICK BLADES PLAIN	5/16" THICK BLADES NOTCHED	NOTCHED FRONT PLAIN REAR
For Quotation Purposes Only – Please Order Items from the Groups on the Next Pages						
Rigid Bearing Gangs - 11" Blade Spacing (Non-Folding Models)						
SF1810-18	17' 17"	28"	12,661	43,983.00	44,591.00	44,271.00
SF1810-18	17' 17"	30"	12,661	45,237.00	45,921.00	45,561.00
Spring Cushion Gangs - 11" Blade Spacing (Non-Folding Models)						
SF1810-14	14' 2"	28"	12,702	46,085.00	46,565.00	46,309.00
SF1810-14	14' 2"	30"	12,702	47,075.00	47,615.00	47,327.00
SF1810-16	15' 10"	28"	13,580	49,052.00	49,596.00	49,308.00
SF1810-16	15' 10"	30"	13,580	50,174.00	50,786.00	50,462.00
Rigid Bearing Gangs - 11" Blade Spacing (Folding Models)						
SF1830-24	24' 7"	28"	23,771	83,600.00	83,752.00	83,304.00
SF1830-24	24' 7"	30"	23,771	84,670.00	85,642.00	85,138.00
SF1830-26	26' 4"	28"	24,209	84,123.00	85,051.00	84,571.00
SF1830-26	26' 4"	30"	24,209	86,037.00	87,081.00	86,541.00
SF1830-30	29' 9"	28"	26,546	92,033.00	93,089.00	92,545.00
SF1830-30	29' 9"	30"	26,546	94,211.00	95,399.00	94,787.00
Spring Cushion Gangs - 11" Blade Spacing (Folding Models)						
SF1830-22	22' 10"	28"	26,934	98,830.00	99,630.00	99,214.00
SF1830-22	22' 10"	30"	26,934	100,480.00	101,380.00	100,912.00
SF1830-24	24' 7"	28"	28,228	100,192.00	101,056.00	100,608.00
SF1830-24	24' 7"	30"	28,228	101,974.00	102,946.00	102,442.00
SF1830-26	26' 4"	28"	28,823	101,426.00	102,354.00	101,874.00
SF1830-26	26' 4"	30"	28,823	103,340.00	104,384.00	103,844.00
SF1830-30	29' 9"	28"	31,559	110,574.00	111,630.00	111,086.00
SF1830-30	29' 9"	30"	31,559	112,752.00	113,940.00	113,328.00
SF1830-34	33' 3"	28"	37,014	131,586.00	132,770.00	132,162.00
SF1830-34	33' 3"	30"	37,014	134,028.00	135,360.00	134,676.00
SF1830-38	38' 6"	28"	38,425	136,281.00	137,657.00	136,953.00
SF1830-38	38' 6"	30"	38,425	139,119.00	140,667.00	139,875.00

1810 and 1830 SERIES TANDEM DISC

ORDER CODE	CUTTING WIDTH	BLADE DIAMETER	APPROX. WEIGHT (LBS)	5/16" THICK BLADES PLAIN	5/16" THICK BLADES NOTCHED	NOTCHED FRONT PLAIN REAR
For Quotation Purposes Only – Please Order Items from the Groups on the Next Pages						
Rigid Bearing Gangs - 13" Blade Spacing (Non-Folding Models)						
SF1810-14	14' 4"	30"	11,152	38,916.00	39,332.00	39,108.00
SF1810-16	16' 4"	30"	11,695	40,523.00	41,003.00	40,747.00
Spring Cushion Gangs - 13" Blade Spacing (Non-Folding Models)						
SF1810-14	14' 4"	30"	11,152	46,085.00	46,501.00	46,227.00
SF1810-16	16' 4"	30"	11,695	49,052.00	49,532.00	49,276.00
Spring Cushion Gangs - 13" Blade Spacing (Folding Models)						
SF1830-22	22' 6"	30"	26,669	98,830.00	99,502.00	99,150.00
SF1830-26	26' 8"	30"	28,666	101,426.00	102,226.00	101,810.00
SF1830-30	30' 9"	30"	31,235	110,574.00	111,502.00	111,022.00
SF1830-34	34' 11"	30"	36,777	131,586.00	132,642.00	132,098.00
SF1830-38	39' 0"	30"	37,568	136,281.00	137,465.00	136,857.00

1810 and 1830 SERIES TANDEM DISCS

ORDER CODE	DESCRIPTION	APPROX. WEIGHT (LBS)	LIST PRICE
	Select One Order Code from Each Group, 01 through 03 as Required.		
	Group 01 Base Machine		
	Rigid Bearing Gangs - 11" Blade Spacing with 28" x 5/16" Blades		
109116RAW	SF1810-18 Non-Folding Model		42,764.00
245482RAW	SF1830-24 Folding Model		80,957.00
244661RAW	SF1830-26 Folding Model		82,192.00
245727RAW	SF1830-30 Folding Model		90,102.00
	Spring Cushion Gangs - 11" Blade Spacing (Non-Folding Models)		
245441RAW	SF1810-14 Non-Folding Model		44,866.00
245454RAW	SF1810-16 Non-Folding Model		47,833.00
108984RAW	SF1830-22 Folding Model		96,899.00
245463RAW	SF1830-24 Folding Model		98,261.00
243274RAW	SF1830-26 Folding Model		99,495.00
242961RAW	SF1830-30 Folding Model		108,643.00
245403RAW	SF1830-34 Folding Model		129,655.00
245190RAW	SF1830-38 Folding Model		134,350.00
	Rigid Bearing Gangs - 13" Blade Spacing with 30" x 5/16" Blades		
245734RAW	SF1810-14 Non-Folding Model		37,697.00
245740RAW	SF1810-16 Non-Folding Model		39,304.00
	Spring Cushion Gangs - 13" Blade Spacing with 30" x 5/16" Blades		
245348RAW	SF1810-14 Non-Folding Model		44,866.00
109124RAW	SF1810-16 Non-Folding Model		47,833.00
109018RAW	SF1830-22 Folding Model		96,899.00
243273RAW	SF1830-26 Folding Model		99,495.00
243200RAW	SF1830-30 Folding Model		108,643.00
244648RAW	SF1830-34 Folding Model		129,655.00
245173RAW	SF1830-38 Folding Model		134,350.00
	Group 02 Blades - Order one per Chart on page 40		
106075AW	Blade, 28" x 5/16" Plain (in base on 11" Blade Spacing)	57.9	No Charge
107773AW	Blade, 28" x 5/16" Notched (for 11" Blade Spacing)	52.7	16.00
107774AW	Blade, 30" x 5/16" Plain (for 11" Blade Spacing)	65.8	33.00
107775AW	Blade, 30" x 5/16" Notched (for 11" Blade Spacing)	60.5	51.00
	13" Blade Spacing		
106021AW	Blade, 30" x 5/16" Plain (in base on 13" Blade Spacing)	65.8	No Charge
108044AW	Blade, 30" x 5/16" Notched (for 13" Blade Spacing)	60.5	16.00

1810 and 1830 SERIES TANDEM DISCS

ORDER CODE	DESCRIPTION	APPROX. WEIGHT (LBS)	LIST PRICE
Group 03 Tires			
22'-30'			
354820AW	385/65R 22.50 / Used Tires with 8 Bolt Hubs		In Base
354536AW	385/65R 22.50 / New Tires with 8 Bolt Hubs		4,924.00
34'+			
354821AW	385/65R 22.50 / Used Tires with 10 Bolt Hubs		In Base
354337AW	385/65R 22.50 / New Tires with 10 Bolt Hubs		4,924.00
Group 04 Depth Control - in price of built up units on page 41 (Optional)			
244654AW	Single Point Depth Control	49	712.00
Group 05 Hydraulic Leveler - in price of built up units on page 41 (Optional)			
256740AW	Hydraulic Leveler for SF1810	85	1,219.00
256738AW	Hydraulic Leveler for SF1830	85	1,219.00

1810 and 1830 SERIES TANDEM DISCS

Configuration	Model	Front and Rear Bearings Right/Left	Total Number of Blades	Scrapers Bearing Standard Right/Left	Scrapers Clean Spool Right/Left Front/Rear	Scrapers Rotary Front/Rear Total	Blades Notched Front / Plain Rear
Rigid Bearing Gangs 11" Spacing	SF1810-18	8/8	38	8/8	10/12	32	18/20
	SF1830-24	10/10	54	10/10	16/18	48	26/28
	SF1830-26	10/10	58	10/10	18/20	52	28/30
	SF1830-30	12/12	66	12/12	20/22	60	32/34
Spring Cushion Gangs 11" Spacing	SF1810-14	6/6	30	6/6	8/10	24	14/16
	SF1810-16	7/7	34	7/7	10/10	28	16/18
	SF1830-22	11/11	50	11/11	14/14	44	24/26
	SF1830-24	11/11	54	11/11	16/16	48	26/28
	SF1830-26	12/12	58	12/12	17/17	52	28/30
	SF1830-30	14/14	66	14/14	19/19	60	32/34
	SF1830-34	17/17	74	17/17	20/20	68	36/38
	SF1830-38	19/19	86	19/19	24/24	80	42/44
Rigid Bearing Gangs 13" Spacing	SF1810-14	6/6	26	6/6	7/7	20	12/14
	SF1810-16	6/6	30	6/6	9/9	24	14/16
Spring Cushion Gangs 13" Spacing	SF1810-14	6/6	26	6/6	7/7	20	12/14
	SF1810-16	6/6	30	6/6	9/9	24	14/16
	SF1830-22	10/10	42	10/10	10/12	36	20/22
	SF1830-26	11/11	50	11/11	14/14	44	24/26
	SF1830-30	13/13	58	13/13	16/16	52	28/30
	SF1830-34	15/15	66	15/15	18/18	60	32/34
	SF1830-38	17/17	74	17/17	20/20	68	36/38

ORDER CODE	DESCRIPTION	APPROX. WEIGHT (LBS)	LIST PRICE

SCRAPER OPTIONS **(in Lieu of Standard Solid Mount Single Scrapers)**

Order Right and Left Hand for a Complete Set (Order 1 per Bearing Indicated for the Right and Left from Above Chart)

107444-11RAW	Scraper, RH for Bearing Standard, for 11" Blade Spacing . .	23	72.00
107444-11LAW	Scraper, LH for Bearing Standard, for 11" Blade Spacing . .	23	72.00
107444-13RAW	Scraper, RH for Bearing Standard, for 13" Blade Spacing . .	25	72.00
107444-13LAW	Scraper, LH for Bearing Standard, for 13" Blade Spacing . .	25	72.00

Order Right and Left Hand for a Complete Set (Order 1 per Blade Indicated for the Right and Left from Above Chart)

108571AW	Scraper, RH to Clean Spool and Blade	8	31.00
108572AW	Scraper, LH to Clean Spool and Blade	8	31.00
108063AW	Scraper, Rotary (Order one per Blade minus 6)	9	114.00

Note: To order the Rotary Scraper options refer to page 1000-40 for the number of blades on the front and rear gangs.
To order Rotary Scrapers for the front & rear gangs OR the rear gang only; reduce the blade count (order quantity) by (6).

1810 and 1830 SERIES TANDEM DISCS

ORDER CODE	DESCRIPTION	APPROX. WEIGHT (LBS)	LIST PRICE

OPTIONAL EQUIPMENT

Bearing Options

357470AW	Bearing Guard (Order one for each Bearing)	8	43.00
104884AW	Washer, Bearing Guard (Order two for each Bearing)	.41	4.00

Miscellaneous Options

350194AW	Rear Hitch, Single Lip for 1" Dia Pin (12' to 18' models) . . .	112	542.00
350195AW	Rear Hitch, Double Lip for 1" Dia Pin (12 ' to 18' models) . .	129	542.00
350192AW	Rear Hitch, Single Lip for 1" Dia Pin (22' to 30' models) . . .	120	542.00
350193AW	Rear Hitch, Double Lip for 1" Dia Pin (22' to 30' models) . .	137	542.00
238778AW	Rear Hydraulic Extension Package (18' and smaller)	27	478.00
247597AW	Rear Hydraulic Extension Package (22' and larger)	50	478.00
236099AW	Safety Light Extension	3	211.00

3 Row Heavy Duty Coil Tine Harrows

Spring Loaded Drag Arms with all Required Hardware and Mounting Brackets
Three rows of 5/8" x 26" Coil Tines on 12" Centers, 4" Spacing Overall, with Angle Adjustments and Backup Protection and 12" Spacing Between Rows

Model Number	Overlap Each Side	Harrow Section Size			Number of Mounting Arms
		4' 0"	6' 0"	8' 0"	
SF1810-14	11' 0"	N/A	N/A	2	2
SF1810-16	13' 0"	N/A	3	N/A	3
SF1810-18	14' 6"	N/A	2	1	4
SF1830-22	7' 0"	N/A	N/A	3	6
SF1830-24	8' 6"	1	1	2	6
SF1830-26	10' 0"	N/A	2	2	6
SF1830-30	13' 6"	N/A	N/A	4	6
SF1830-34	16' 6"	N/A	6	N/A	9
SF1830-38	21' 0"	N/A	3	3	9

245875AW	SF1810-14	1,130	4,655.00
245876AW	SF1810-16	1,356	5,615.00
245877AW	SF1810-18	1,536	6,304.00
245878AW	SF1810-22	2,201	8,488.00
245879AW	SF1810-24	2,336	9,269.00
245880AW	SF1810-26	2,406	9,388.00
245881AW	SF1830-30	2,606	10,018.00
245882AW	SF1830-34	3,162	12,464.00
245884AW	SF1830-38	3,413	13,288.00

ORDER CODE	DESCRIPTION	APPROX. WEIGHT (LBS)	LIST PRICE

OPTIONAL EQUIPMENT

2 Row Heavy Duty Coil Tine Harrow with Flat Bar Basket

Spring Loaded Drag Arms with all Required Hardware and Mounting Brackets
Two rows of 5/8" x 26" Coil Tines on 12" Centers, 6" Spacing Overall,
with Angle Adjustments and Backup Protection and 12" Spacing Between Rows
13" Diameter Basket with Eight 1/4" x 1-1/4" Flat Blades and Triple Lip Sealed
Flange Bearings with Lube Fitting. Basket widths; 4.5', 6' and 7.5'

Model Number	Overlap Each Side	Harrow Section Size			Number of Mounting Arms
		4" 0"	6' 0"	8' 0"	
SF1810-14	11' 0"	N/A	N/A	2	2
SF1810-16	13' 0"	N/A	3	N/A	3
SF1810-18	14' 6"	N/A	2	1	4
SF1830-22	7' 0"	N/A	N/A	3	6
SF1830-24	8' 6"	1	1	2	6
SF1830-26	10' 0"	N/A	2	2	6
SF1830-30	13' 6"	N/A	N/A	4	6
SF1830-34	16' 6"	N/A	6	N/A	9
SF1830-38	21' 0"	N/A	3	3	9

246306AW	SF1810-14	1,455	7,055.00
246307AW	SF1810-16	1,804	9,093.00
246308AW	SF1810-18	1,996	9,915.00
246309AW	SF1810-22	2,690	12,892.00
246310AW	SF1810-24	2,953	14,613.00
246311AW	SF1810-26	3,032	14,852.00
246312AW	SF1830-30	3,256	15,670.00
246313AW	SF1830-34	4,067	20,242.00
246315AW	SF1830-38	4,353	21,408.00

RESERVED

DEALERSHIP ASSEMBLY AMOUNTS ON 2000 SERIES
(DISCOUNTS DO NOT APPLY)

The factory or dealership set-up amounts will be charged for machines set-up by Sunflower. Set-up amounts are the same whether machines are shipped via our truck (gangs off wings, etc.) or set-up completely and picked up by dealer's truck. Factory assembly charge includes hydraulic hose, hydraulic oil, and tips (hydraulic system is charged). Dealer location assembly charge includes hydraulic hose, and tips. (Hydraulic oil is not included) See note below.

MODEL NUMBER	DEALER LOCATION ORDER CODE	DEALER LOCATION SET-UP RATE
SF2510-13	SET0257DS	1000.00
SF2510-15	SET0258DS	1025.00
SF2510-17	SET0259DS	1050.00
SF2530-19	SET0260DS	1300.00
SF2530-21	SET0261DS	1325.00
SF2530-23	SET0262DS	1350.00
SF2530-25	SET0263DS	1550.00
SF2530-27	SET0264DS	1575.00
SF2530-29	SET0265DS	1600.00
SF2530-31	SET0266DS	1800.00
SF2530-33	SET0267DS	1825.00
SF2530-35	SET0268DS	1875.00
SF2530-37E	SET0269DS	2100.00
SF2530-37	SET0270DS	1900.00
SF2530-39E	SET0271DS	2125.00
SF2530-39	SET0272DS	1925.00
SF2530-41	SET0273DS	2150.00
SF2530-43	SET0274DS	2175.00
SF2530-45	SET0275DS	2200.00
SF2530-47	SET0276DS	2225.00
Coil Tine Harrows	SET0277DS	23.00 per foot
Coil Tine Harrows with Flat-Bar	SET0278DS	25.00 per foot

SUNFLOWER RECOMMENDS THESE SET-UP FIGURES BE USED BY DEALERS WHEN TRANSFERRING EQUIPMENT

♦Frames indicated are over-width and require special permits.

Dealership Assembly requirements:

1. The dealership assembly service must be ordered separately from the implement. (initiates scheduling of service) Please order dealership assembly service from the field installed options tab in e-ordering.
2. Include in the dealership assembly order request the order and/or invoice number of the implement to be assembled.
3. Dealer supplies hydraulic oil (oil is not included).
4. Dealer supplies a fork lift of sufficient size to be used by AGCO's assembly crew.

2500 SERIES THREE SECTION FLEXIBLE CHISEL PLOWS

F.O.B. Wahpeton, ND

STANDARD CONFIGURATION

13’ through 23’ Sizes
4 12R22.5 x 8.25 (used) Tires
4 8-Bolt 10" Rims
2 Walking Tandem Axle with 2-1/2" Spindles

25’ through 29’ Sizes
Level Lift
6 12R22.5 x 8.25 (used) tires
6 8-Bolt 10" Rims
2 Walking Tandem Axle with 2-1/2" Spindles and 8-bolt hubs (main)
2 Single Axle with 2-1/2" Spindle and 8 bolt hub (6’ wing)

30’ through 47’ Sizes
Level Lift:
2 Caster Gauge Wheels & Ratchet Jacks
2 9.5L x 15 8-Ply Tires
2 6-Bolt 15 x 8 Rims
8 12R22.5 x 8.25 (Used) Tires
8 8-Bolt 10" Rims
4 Walking Tandems with 2-1/2" Spindles
8 8-Bolt Hubs

Floating Hitch:
4 Hydraulic Controlled Gauge Wheels
4 31 x 13.5 - 15 12Ply Tires
4 6-Bolt 15 x 8 Rims
8 12R22.5 x 8.25 (Used) Tires
8 8-Bolt 10" Rims
4 Walking Tandems with 2-1/2" Spindles
8 8-Bolt Hubs

ALL SIZES
13’ Main Frame
4" x 4" 4-Bar Welded 140" Deep Tube Frame 4-1/2" O.D. Main Lift Axle
2 Main Lift Cylinders and Hose
Single Point Depth Control
Cat V Hitch (for use with 2" pin)
1 Screw Type Tongue Jack
Safety Chain
Transport Warning Light Package
12" or 15" Shank Spacings
Shank Options:
650 Pound 1-1/4" x 2" x 32" Extension Spring Shank
1000 Pound 1-1/4" x 2" x 30" Compression Spring “On-Edge” Shank

Point Options:
Spike 7/8" x 2" x 19-1/2" with Hardware
Twisted Concave Spike, 1/2" x 3" with Hardware (Adapter Plate Required for Twisted Points)

2500 SERIES THREE SECTION FLEXIBLE CHISEL PLOWS

Specifications for 12" and 15" Spacing with
1000 Pound Compression Spring Shanks and Level Lift Hitch

13' (3.96m) Main Frame Center

Model	Transport Width ft (m)	Transport Height ft (m)	Stub / Wing Size ft (m)	12" Spacing			15" Spacing		
				Cutting Width ft (m)	Number of Shanks	Weight lbs (kg)	Cutting Width ft (m)	Number of Shanks	Weight lbs (kg)
SF2510-13	13' 6" (4.1)	6' 8" (2.8)	0	13' (3.96)	13	6,694 (3,036)	12' 6" (3.81)	10	6,289 (2853)
SF2510-15	14' 8" (4.37)	6' 8" (2.8)	1' (0.03)	15' (4.6)	15	7,024 (3,186)	15' 0" (4.6)	12	6619 (3,002)
SF2510-17	17' 1" (5.21)	6' 8" (2.8)	2' (0.06)	17' (5.2)	17	7,456 (3,382)	17' 6" (5.3)	14	7051 (3,198)
SF2530-19	14' 1" (4.29)	9' 9" (2.97)	0'/3' (0.91)	19' 0" (5.79)	19	8,652 (3,925)	N/A	N/A	N/A
SF2530-19-21	14' 1" (4.29)	9' 11" (3.02)	1' (0.03)/3' (0.91)	21' 0" (6.40)	21	8,977 (4,072)	20' 0" (6.10)	16	8,302 (3,766)
SF2530-19-23	14' 1" (4.29)	10' 1" (3.07)	2' (0.06)/3' (0.91)	23' 0" (7.01)	23	9,410 (4,268)	22' 6" (6.86)	18	8,735 (3,962)
SF2530-25	14' 1" (4.29)	11' 1" (3.38)	0'/6' (1.83)	25' 0" (7.62)	25	11,404 (5,173)	25' 0"	20	10,729 (4,867)
SF2530-25-27	14' 1" (4.29)	11' 1" (3.38)	1' (0.03)/6' (1.83)	27' 0" (8.23)	27	11,734 (5,325)	27' 6"	22	11,059 (5,016)
SF2530-25-29	14' 1" (4.29)	11' 1" (3.38)	2' (0.06)/6' (1.83)	29' 0" (8.84)	29	12,167 (5,519)	30' 0"	24	11,452 (5,194)
SF2530-31	19' 2" (5.84)	12' 6" (3.81)	0'/9' (2.74)	31' 0" (9.45)	31	15,171 (6,882)	30' 0" (9.14)	24	14,253 (6,465)
SF2530-31-33	19' 2" (5.84)	13' 6" (4.11)	1' (0.03)/9' (2.74)	33' 0" (10.06)	33	15,528 (7,044)	32' 6" (9.91)	26	14,583 (6,615)
SF2530-31-35	19' 2" (5.84)	14' 6" (4.42)	2' (0.06) /9' (2.74)	35' 0" (10.67)	35	15,961 (7,240)	35' 0' (10.67)	28	15,016 (6,811)
SF2530-31-37	19' 2" (5.84)	12' 6" (3.81)	0'/9' (2.74) & 3' (.91)	37' 0" (11.28)	37	17,267 (7,832)	37' 6" (11.43)	30	16,322 (7,404)
SF2530-31-39	19' 2" (5.84)	12' 6" (3.81)	1' (0.03)/9' (2.74) & 3' (0.91)	39' 0" (11.89)	37	17,597 (7,982)	40' 0" (12.19)	32	16,652 (7,553)
SF2530-31-41	19' 2" (5.84)	12' 6" (3.81)	2' (0.06)/9' (2.74) & 3' (0.91)	41' 0" (12.50)	41	18,029 (8,178)	42' 6" (12.95)	34	17,084 (7,749)
SF2530-37	19' 2" (5.84)	15' 6" (4.72)	0'/12' (3.66)	37' 0" (11.23)	37	16,649 (7,552)	37' 6" (11.43)	30	15,704 (7,123)
SF2530-37-39	19' 2" (5.84)	16' 6" (5.03)	1' (0.03)/12' (3.66)	39' 0" (11.89)	39	16,979 (7,702)	40' 0" (12.19)	32	16,034 (7,273)
SF2530-37-43	19' 2" (5.84)	16' 6" (5.03)	0'/12' (3.66) & 3' (0.91)	43' 0" (13.11)	43	18,767 (8,513)	42' 6" (12.95)	34	17,552 (7,962)
SF2530-37-45	19' 2" (5.84)	16' 6" (5.03)	1' (0.03)/12' (3.66) & 3' (0.91)	45' 0" (13.72)	45	19,097 (8,662)	45' 0" (13.72)	36	17,882 (8,111)
SF2530-37-47	19' 2" (5.84)	16' 6" (5.03)	2' (0.06)/12' (3.66) & 3' (0.91)	47' 0" (14.33)	47	19,530 (8,859)	47' 6" (14.49)	38	18,315 (8,308)

2500 SERIES THREE SECTION FLEXIBLE CHISEL PLOWS

These prices reflect the standard configuration. If items other than those listed in the standard configuration are ordered, then the quoted price below will change.

For Quotation Purposes Only – Please Order Items from the Groups on the Next Pages

MODEL NUMBER	FRAME DESCRIPTION	EST. WT.	LIST PRICE
LEVEL LIFT TONGUE, 12" SHANK SPACING -			
with 1000 Pound "On-Edge" Compression Spring Shanks (1-1/4" X 2" X 30")			
SF2510-13	Three Section 13 Shank Chisel Plow	8035	25,943.00
SF2510-15	Three Section 15 Shank Chisel Plow	8181	27,757.00
SF2510-17	Three Section 17 Shank Chisel Plow	8553	29,276.00
SF2530-19	Three Section 19 Shank Chisel Plow	8699	35,701.00
SF2530-21	Three Section 21 Shank Chisel Plow	8925	36,906.00
SF2530-23	Three Section 23 Shank Chisel Plow	9411	38,719.00
SF2530-25	Three Section 25 Shank Chisel Plow	9557	47,387.00
SF2530-27	Three Section 27 Shank Chisel Plow	9783	50,394.00
SF2530-29	Three Section 29 Shank Chisel Plow	9135	51,228.00
SF2530-31	Three Section 31 Shank Chisel Plow	9369	60,303.00
SF2530-33	Three Section 33 Shank Chisel Plow	9917	62,460.00
SF2530-35	Three Section 35 Shank Chisel Plow	10151	64,272.00
SF2530-37E	Three Section 37 Shank Chisel Plow	10465	69,429.00
SF2530-37	Three Section 37 Shank Chisel Plow	11039	64,958.00
SF2530-39E	Three Section 39 Shank Chisel Plow	11273	70,968.00
SF2530-39	Three Section 39 Shank Chisel Plow	11587	66,498.00
SF2530-41	Three Section 41 Shank Chisel Plow	11587	72,763.00
SF2530-43	Three Section 43 Shank Chisel Plow	11587	74,084.00
SF2530-45	Three Section 45 Shank Chisel Plow	11587	75,687.00
SF2530-47	Three Section 47 Shank Chisel Plow	11587	77,482.00

2500 SERIES THREE SECTION FLEXIBLE CHISEL PLOWS

ORDER CODE	DESCRIPTION	CODE	APPROX. WEIGHT (LBS)	LIST PRICE
	Select One Order Code from Each Group, 01 through 05.			
Group 01 Base Machine (12" or 15" Spacing)				
SF2510-13	352370AW, Three Section 13/10 Shank Chisel Plow		3961	14,302.00
SF2510-15	352371AW, Three Section 15/12 Shank Chisel Plow		4021	14,790.00
SF2510-17	352372AW, Three Section 17/14 Shank Chisel Plow		4183	14,983.00
SF2530-19	352373AW, Three Section 19 Shank Chisel Plow		5131	20,082.00
SF2530-21	352374AW, Three Section 21/16 Shank Chisel Plow		5191	19,961.00
SF2530-23	352375AW, Three Section 23/18 Shank Chisel Plow		5354	20,448.00
SF2530-25	352376AW, Three Section 25/20 Shank Chisel Plow		6698	24,524.00
SF2530-27	352377AW, Three Section 27/22 Shank Chisel Plow		6758	26,205.00
SF2530-29	352378AW, Three Section 29/24 Shank Chisel Plow		6920	25,713.00
SF2530-31	352379AW, Three Section 31/24 Shank Chisel Plow		8751	31,687.00
SF2530-33	352380AW, Three Section 33/26 Shank Chisel Plow		8812	32,518.00
SF2530-35	352381AW, Three Section 35/28 Shank Chisel Plow		8974	33,004.00
SF2530-37E	352382AW, Three Section 37/30 Shank Chisel Plow Extended		10010	36,835.00
SF2530-37	352384AW, Three Section 37/30 Shank Chisel Plow		9382	32,364.00
SF2530-39E	352399AW, Three Section 39/32 Shank Chisel Plow Extended		10070	37,048.00
SF2530-39	352385AW, Three Section 39/32 Shank Chisel Plow		9443	32,578.00
SF2530-41	352383AW, Three Section 41 Shank Chisel Plow		10232	37,517.00
SF2530-43	352386AW, Three Section 43/34 Shank Chisel Plow		10690	37,512.00
SF2530-45	352387AW, Three Section 45/35 Shank Chisel Plow		10750	37,789.00
SF2530-47	352388AW, Three Section 47/38 Shank Chisel Plow		10913	38,258.00
Group 02 Shanks Order Quantity Indicated Above				
354553AW	650 lb Chisel Flow Shank (12" or 15" Spacing)		3441	427.00
353960AW	1000 lb Edge On Spring Shank Assembly (12" or 15" Spacing)		4061	633.00
Group 04 Tires				
For 2510, 2530-19, 2530-21 & 2530-23				
353461AW	(4) Used 12R22.5 x 8.25		704	2,188.00
354517AW	(4) New 12R22.5 x 8.25			4,000.00
For 2530-25 through 2530-29				
353460AW	(6) Used 12R22.5 x 8.25		1056	3,283.00
354516AW	(6) New 12R22.5 x 8.25			6,000.00
31' and Larger, for use with Level Lift Hitch				
353458AW	Used Tire Package, (8) 12R22.5 x 8.25 and (2) 9.5L x 15		1524	5,058.00
354514AW	New Tire Package, (8) New 12R22.5 x 8.25 and (2) 9.5L x 15			8,688.00
31' and Larger, for use with Floating Hitch				
353459AW	Used Tire Package, (8) 12R22.5 x 8.25 and (4) 31 x 13.5		1465	6,800.00
354515AW	New Tire Package, (8) 12R22.5 x 8.25 and (4) 31 x 13.5			10,533.00
Group 05 Front Hitches				
353443AW	Level Lift Hitch for use with 29' and Smaller		242	834.00
351787AW	Level Lift Hitch for use with 31' and Larger		649	3,005.00
351786AW	Floating Hitch for use with 31' and Larger		2082	9,571.00

2500 SERIES THREE SECTION FLEXIBLE CHISEL PLOWS

ORDER CODE	DESCRIPTION	APPROX. WEIGHT (LBS)	LIST PRICE
OPTIONAL EQUIPMENT - For Current Machines ONLY			
Spikes			
222696AW	Spike, 5/8 x 2 x 15" Reversible with Hardware		30.00
240690AW	Twisted Spike, Concave 3", LH with Hardware (Requires Adapter Plate)		33.00
240691AW	Twisted Spike, Concave 3", RH with Hardware (Requires Adapter Plate)		33.00
352261AW	Adapter Plate LH (Concave Twist)		13.00
352262AW	Adapter Plate RH (Concave Twist)		13.00
Attachments			
2510-13			
236068AW	3-Bar Coil Tine Harrow (5/8" x 26" Tines)	824	3,013.00
353971AW	4-Bar Coil Tine Harrow (5/8" x 26" Tines)		3,578.00
245949AW	2-Bar Coil Tine Harrow (5/8" x 26" Tines) with Flat Bar Basket	1163	5,039.00
2510-15			
236069AW	3-Bar Coil Tine Harrow (5/8" x 26" Tines)	907	3,266.00
353972AW	4-Bar Coil Tine Harrow (5/8" x 26" Tines)		3,802.00
245950AW	2-Bar Coil Tine Harrow (5/8" x 26" Tines) with Flat Bar Basket	1262	5,332.00
2510-17			
353485AW	3-Bar Coil Tine Harrow (5/8" x 26" Tines)	1127	4,089.00
353973AW	4-Bar Coil Tine Harrow (5/8" x 26" Tines)		5,072.00
353905AW	2-Bar Coil Tine Harrow (5/8" x 26" Tines) with Flat Bar Basket	1611	7,168.00
2530-19			
236070AW	3-Bar Coil Tine Harrow (5/8" x 26" Tines)	1344	5,369.00
353974AW	4-Bar Coil Tine Harrow (5/8" x 26" Tines)		6,626.00
245951AW	2-Bar Coil Tine Harrow (5/8" x 26" Tines) with Flat Bar Basket	1969	9,226.00
2530-21			
236071AW	3-Bar Coil Tine Harrow (5/8" x 26" Tines)	1428	5,623.00
353975AW	4-Bar Coil Tine Harrow (5/8" x 26" Tines)		6,852.00
245952AW	2-Bar Coil Tine Harrow (5/8" x 26" Tines) with Flat Bar Basket	2069	9,518.00
2530-23			
236072AW	3-Bar Coil Tine Harrow (5/8" x 26" Tines)	1771	6,588.00
353976AW	4-Bar Coil Tine Harrow (5/8" x 26" Tines)		7,428.00
245953AW	2-Bar Coil Tine Harrow (5/8" x 26" Tines) with Flat Bar Basket	2320	10,303.00
2530-25			
236075AW	3-Bar Coil Tine Harrow (5/8" x 26" Tines)	1868	6,949.00
353977AW	4-Bar Coil Tine Harrow (5/8" x 26" Tines)		8,065.00
245958AW	2-Bar Coil Tine Harrow (5/8" x 26" Tines) with Flat Bar Basket	2513	11,215.00
2530-27			
236076AW	3-Bar Coil Tine Harrow (5/8" x 26" Tines)	2028	7,473.00
353945AW	4-Bar Coil Tine Harrow (5/8" x 26" Tines)		8,290.00
245959AW	2-Bar Coil Tine Harrow (5/8" x 26" Tines) with Flat Bar Basket	2609	11,502.00
2530-29			
236077AW	3-Bar Coil Tine Harrow (5/8" x 26" Tines)	2112	7,727.00
353978AW	4-Bar Coil Tine Harrow (5/8" x 26" Tines)		8,515.00
245960AW	2-Bar Coil Tine Harrow (5/8" x 26" Tines) with Flat Bar Basket	2709	11,795.00

2500 SERIES THREE SECTION FLEXIBLE CHISEL PLOWS

ORDER CODE	DESCRIPTION	APPROX. WEIGHT (LBS)	LIST PRICE
OPTIONAL EQUIPMENT - For Current Machines ONLY			
Attachments			
2530-31			
236078AW	3-Bar Coil Tine Harrow (5/8" x 26" Tines)	2081	7,616.00
353946AW	4-Bar Coil Tine Harrow (5/8" x 26" Tines)		8,741.00
245961AW	2-Bar Coil Tine Harrow (5/8" x 26" Tines) with Flat Bar Basket	2818	11,887.00
2530-33			
236079AW	3-Bar Coil Tine Harrow (5/8" x 26" Tines)	2295	8,787.00
353979AW	4-Bar Coil Tine Harrow (5/8" x 26" Tines)		10,701.00
245962AW	2-Bar Coil Tine Harrow (5/8" x 26" Tines) with Flat Bar Basket	3262	14,701.00
2530-35			
236080AW	3-Bar Coil Tine Harrow (5/8" x 26" Tines)	2415	9,131.00
353980AW	4-Bar Coil Tine Harrow (5/8" x 26" Tines) 0		10,926.00
245963AW	2-Bar Coil Tine Harrow (5/8" x 26" Tines) with Flat Bar Basket	3361	14,993.00
2530-37E			
236081AW	3-Bar Coil Tine Harrow (5/8" x 26" Tines)	2630	10,215.00
353982AW	4-Bar Coil Tine Harrow (5/8" x 26" Tines)		11,838.00
245964AW	2-Bar Coil Tine Harrow (5/8" x 26" Tines) with Flat Bar Basket	3654	16,158.00
2530-37			
236083AW	3-Bar Coil Tine Harrow (5/8" x 26" Tines)	2640	9,823.00
353981AW	4-Bar Coil Tine Harrow (5/8" x 26" Tines)		11,838.00
245966AW	2-Bar Coil Tine Harrow (5/8" x 26" Tines) with Flat Bar Basket	3639	15,874.00
2530-39E			
236082AW	3-Bar Coil Tine Harrow (5/8" x 26" Tines)	2686	10,230.00
353983AW	4-Bar Coil Tine Harrow (5/8" x 26" Tines)		11,734.00
245965AW	2-Bar Coil Tine Harrow (5/8" x 26" Tines) with Flat Bar Basket	3724	16,366.00
2530-39			
236084AW	3-Bar Coil Tine Harrow (5/8" x 26" Tines)	2724	10,068.00
353948AW	4-Bar Coil Tine Harrow (5/8" x 26" Tines)		12,064.00
245967AW	2-Bar Coil Tine Harrow (5/8" x 26" Tines) with Flat Bar Basket	3738	16,165.00
2530-41			
351793AW	3-Bar Coil Tine Harrow (5/8" x 26" Tines)	2957	10,792.00
353947AW	4-Bar Coil Tine Harrow (5/8" x 26" Tines)		12,641.00
353906AW	2-Bar Coil Tine Harrow (5/8" x 26" Tines) with Flat Bar Basket	3975	17,143.00
2530-43			
236086AW	3-Bar Coil Tine Harrow (5/8" x 26" Tines)	3157	12,342.00
353984AW	4-Bar Coil Tine Harrow (5/8" x 26" Tines)		16,033.00
245968AW	2-Bar Coil Tine Harrow (5/8" x 26" Tines) with Flat Bar Basket	4481	20,335.00
2530-45			
236091AW	3-Bar Coil Tine Harrow (5/8" x 26" Tines)	3213	12,281.00
353985AW	4-Bar Coil Tine Harrow (5/8" x 26" Tines)		15,793.00
245969AW	2-Bar Coil Tine Harrow (5/8" x 26" Tines) with Flat Bar Basket	4540	20,340.00
2530-47			
353486AW	3-Bar Coil Tine Harrow (5/8" x 26" Tines)	3449	12,731.00
353986AW	4-Bar Coil Tine Harrow (5/8" x 26" Tines)		15,549.00
353909AW	2-Bar Coil Tine Harrow (5/8" x 26" Tines) with Flat Bar Basket	4781	21,124.00

2500 SERIES THREE SECTION FLEXIBLE CHISEL PLOWS

ORDER CODE	DESCRIPTION	APPROX. WEIGHT (LBS)	LIST PRICE

OPTIONAL EQUIPMENT - For Current Machines ONLY

Miscellaneous

For 2530-31- 2530-47

353900AW	Rear Hitch.	850	2,130.00
238778AW	Hydraulic Extension Package (Pair)	24	478.00
236099AW	Safety Light Extension (Connects to Light Kit on Unit)	3	211.00

FACTORY OR DEALERSHIP ASSEMBLY AMOUNTS ON 3000 SERIES
(DISCOUNTS DO NOT APPLY)

The factory or dealership set-up amounts will be charged for machines set-up by Sunflower. Set-up amounts are the same whether machines are shipped via our truck (gangs off wings, etc.) or set-up completely and picked up by dealer's truck. Factory assembly charge includes hydraulic hose, hydraulic oil, and tips (hydraulic system is charged). Dealer location assembly charge includes hydraulic hose, and tips. (Hydraulic oil is not included) See note below.

MODEL NUMBER	FACTORY ORDER CODE	FACTORY SET-UP RATE	DEALER LOCATION ORDER CODE	DEALER LOCATION SET-UP RATE
SF3030-21 (Base Machine)	SET0062S	**1,091.00**	SET0062DS	**1,143.00**
SF3030-25 (Base Machine)	SET0063S	**1,204.00**	SET0063DS	**1,262.00**
SF3040-28 (Base Machine)	SET0064S	**1,402.00**	SET0064DS	**1,469.00**
SF3040-32 (Base Machine)	SET0065S	**1,516.00**	SET0065DS	**1,588.00**
SF3050-35 (Base Machine)	SET0066S	**1,725.00**	SET0066DS	**1,807.00**
SF3060-42 (Base Machine)	SET0067S	**2,188.00**	SET0067DS	**2,292.00**
SF3070-49 (Base Machine)	SET0068S	**2,606.00**	SET0068DS	**2,730.00**
SF3372-40 (Base Machine)	SET0056S	**2,217.00**	SET0056DS	**2,322.00**
SF3392-52 (Base Machine)	SET0057S	**2,918.00**	SET0057DS	**3,057.00**
SF3662-30 (Base Machine)	SET0058S	**1,887.00**	SET0058DS	**1,977.00**
SF3672-35 (Base Machine)	SET0059S	**2,188.00**	SET0059DS	**2,292.00**
SF3692-45 (Base Machine)	SET0060S	**2,900.00**	SET0060DS	**3,038.00**
SF3612-55 (Base Machine)	SET0061S	**3,593.00**	SET0061DS	**3,764.00**
SF3030-21 (with Treaders)	SET0075S	**1,261.00**	SET0075DS	**1,321.00**
SF3030-25 (with Treaders)	SET0076S	**1,392.00**	SET0076DS	**1,459.00**
SF3040-28 (with Treaders)	SET0077S	**1,631.00**	SET0077DS	**1,708.00**
SF3040-32 (with Treaders)	SET0078S	**1,754.00**	SET0078DS	**1,837.00**
SF3050-35 (with Treaders)	SET0079S	**2,010.00**	SET0079DS	**2,105.00**
SF3060-42 (with Treaders)	SET0080S	**2,531.00**	SET0080DS	**2,651.00**
SF3070-49 (with Treaders)	SET0081S	**3,004.00**	SET0081DS	**3,147.00**
SF3372-40 (with Treaders)	SET0069S	**2,616.00**	SET0069DS	**2,740.00**
SF3392-52 (with Treaders)	SET0070S	**3,431.00**	SET0070DS	**3,595.00**
SF3662-30 (with Treaders)	SET0071S	**2,228.00**	SET0071DS	**2,334.00**
SF3672-35 (with Treaders)	SET0072S	**2,588.00**	SET0072DS	**2,712.00**
SF3692-45 (with Treaders)	SET0073S	**3,410.00**	SET0073DS	**3,573.00**
SF3612-55 (with Treaders)	SET0074S	**4,217.00**	SET0074DS	**4,418.00**
SF3030-21 (Coulters)	SET0082S	**370.00**	SET0082DS	**387.00**
SF3030-25 (Coulters)	SET0083S	**407.00**	SET0083DS	**427.00**
SF3040-28 (Coulters)	SET0084S	**492.00**	SET0084DS	**516.00**
SF3040-32 (Coulters)	SET0085S	**530.00**	SET0085DS	**556.00**
SF3050-35 (Coulters)	SET0086S	**616.00**	SET0086DS	**646.00**
SF3060-42 (Coulters)	SET0087S	**739.00**	SET0087DS	**774.00**
SF3060-49 (Coulters)	SET0088S	**862.00**	SET0088DS	**903.00**

SUNFLOWER RECOMMENDS THESE SET-UP FIGURES BE USED BY DEALERS WHEN TRANSFERRING EQUIPMENT

Dealership Assembly requirements:

1. The dealership assembly service must be ordered separately from the implement. (initiates scheduling of service) Please order dealership assembly service from the field installed options tab in e-ordering.
2. Include in the dealership assembly order request the order and/or invoice number of the implement to be assembled.
3. Dealer supplies hydraulic oil (oil is not included).
4. Dealer supplies a fork lift of sufficient size to be used by AGCO's assembly crew.

3000 SERIES FALLOW-KING

F.O.B. Beloit, KS
STANDARD EQUIPMENT

3 Section Model 3030

8 15" x 6" Six Bolt Wheels and Hubs with Zerks, 2" Spindles and Triple Lip Seals
4 Walking Beams with Greaseable Tapered Roller Bearings
1 Rephasing Lift System with two 3-1/2 x 10 and two 3-1/4 x 10 Hydraulic Cylinders
1 Fold System with two 4 x 24 Hydraulic Cylinders

4 Section Model 3040

10 15" x 6" Six Bolt Wheels and Hubs with Zerks, 2" Spindles and Triple Lip Seals
5 Walking Beams with Greaseable Tapered Roller Bearings
1 Rephasing Lift System with two 3-3/4 x 10, two 3-1/2 x 10 and one 3-1/4 x 10 Hydraulic Cylinders
1 Fold System with two 4 x 24 Hydraulic Cylinders
2 Gauge Wheels, 8.00 x 10 New Tires and Tubes, Five Bolt Hubs and Triple Lip Seals

5 Section Model 3050

12 15" x 6" Six Bolt Wheels and Hubs with Zerks, 2" Spindles and Triple Lip Seals
6 Walking Beams with Greaseable Tapered Roller Bearings
1 Rephasing Lift System with two 4 x 10, two 3-3/4 x 10, and two 3-1/2 x 10 Hydraulic Cylinders
1 Fold System with two 4 x 24 and one 4 x 30 Hydraulic Cylinders
2 Gauge Wheels, 8.00 x 10 New Tires and Tubes, Five Bolt Hubs and Triple Lip Seals

6 Section Model 3060

14 15" x 6" Six Bolt Wheels and Hubs with Zerks, 2" Spindles and Triple Lip Seals
7 Walking Beams with Greaseable Tapered Roller Bearings
1 Rephasing Lift System with two 4 x 10, two 3-3/4 x 10, two 3-1/2 x 10 and one 3-1/4 x 10 Hydraulic Cylinders
1 Fold System with two 4 x 24 and two 4 x 30 Hydraulic Cylinders
2 Gauge Wheels, 8.00 x 10 New Tires and Tubes, Five Bolt Hubs and Triple Lip Seals

7 Section Model 3070

16 15" x 6" Six Bolt Wheels and Hubs with Zerks, 2" Spindles and Triple Lip Seals
8 Walking Beams with Greaseable Tapered Roller Bearings
1 Rephasing Lift System with two 4 x 10, two 3-3/4 x 10, two 3-1/2 x 10 and two 3-1/4 x 10 Hydraulic Cylinders
1 Fold System with three 4 x 24, one 4 x 30, one 5 x 30 and one 3 x 8 Hydraulic Cylinders
2 Gauge Wheels, 8.00 x 10 New Tires and Tubes, Five Bolt Hubs and Triple Lip Seals

All Models

1 Single Point Depth Control
1 Hitch Leveling Ratchet Jack
1 Tongue Jack
1 SMV Emblem
Single Lip Hitch with 2" Oblong Pin Hole (1-1/2" Hole on 21')
1-1/2" x 2" x 30" On-edge Shanks with Shear Bolt Protection, 20" Shank Spacing
5/16" x 26" Hard-faced Bottom Sweeps
Warning Light Kit, Complete with Wiring to Tractor
See Previous Page for Standard Tires

MODEL NO.	TILLAGE WIDTH	NO. OF SHANKS	TRANSPORT HEIGHT	TRANSPORT WIDTH	WING FOLD POSITION
SF3030-21	21'	13	10' 8"	14' 5"	1 - 1
SF3030-25	25'	15	12' 4"	14' 5"	1 - 1
SF3040-28	28'	17	10' 8"	21' 2"	1 - 1
SF3040-32	32'	19	12' 4"	21' 2"	1 - 1
SF3050-35	35'	21	12' 8"	21' 3"	2 - 1
SF3060-42	42'	25	13'	22' 8"	2 - 2
SF3070-49	49'	29	15' 6"	24'	3 - 2

SUNFLOWER

3000 SERIES FALLOW-KING

These prices reflect the standard configuration. If items other than those listed in the standard configuration are ordered, then the quoted price below will change.

For Quotation Purposes Only – Please Order Items from the Groups Below

MODEL NUMBER		EST. WEIGHT	LIST PRICE
SF3030-21	3030-21 Fallow-King with 13 shanks	5944	26,311.00
SF3030-25	3030-25 Fallow-King with 15 shanks	6160	28,425.00
SF3040-28	3040-28 Fallow-King with 17 shanks	8044	37,545.00
SF3040-32	3040-32 Fallow-King with 19 shanks	8274	39,659.00
SF3050-35	3050-35 Fallow-King with 21 shanks	9759	44,235.00
SF3060-42	3060-42 Fallow-King with 25 shanks	11874	52,137.00
SF3070-49	3070-49 Fallow-King with 29 shanks	13650	62,485.00

ORDER CODE	DESCRIPTION	APPROX. WEIGHT (LBS)	LIST PRICE
	Select One Order Code from Each Group, 01 through 05.		
	Group 01 Base Machine		
SF3030-21	30302101, Three Section, 21' Fallow-King	5944	22,128.00
SF3030-25	30302101, Three Section, 25' Fallow-King	5944	22,128.00
SF3040-28	30402801, Four Section, 28' Fallow-King	8044	32,122.00
SF3040-32	30402801, Four Section, 32' Fallow-King	8044	32,122.00
SF3050-35	30503501, Five Section, 35' Fallow-King	9759	37,572.00
SF3060-42	30604201, Six Section, 42' Fallow-King	11874	44,234.00
SF3070-49	30704901, Seven Section, 49' Fallow-King	13650	53,342.00
	Group 02 Shanks Order Quantity Indicated Above from Quotation Section		
5556RS	Rigid Shear Bolt Mount Shank (1-1/2" x 2" x 30")	41	226.00
	Group 03 Sweeps Order One per Shank		
1400055S	26" Hard-faced Sweep, Straight Wing	16	84.00
1400165S	32" Hard-faced Sweep, Straight Wing, 5/16" Thick.	19	100.00
	Group 04 Extension Kit For SF3030-25 and SF3040-32		
12900321RS	Extension Kit (includes 2 Shanks) (Required on 3030-25 and 3040-32)	184	1,494.00
	Group 05 Hitches		
5334GS	Single Lip Hitch with 1-1/2" Pin Hole (21')	26	153.00
4781GS	Single Lip Hitch with 2" Pin Hole (25', 28', 32', 35', 42', 49')	29	153.00
7500103S	Double Lip Hitch with 1-9/16" Pin Hole (21', 28', 32', and 35')	20	153.00

3000 SERIES FALLOW-KING

OPTIONAL EQUIPMENT - For Current Machines ONLY

ORDER CODE	DESCRIPTION	APPROX. WEIGHT (LBS)	LIST PRICE
Rear Tow Hitch for 3 Section			
7462RS	Rear Tow Hitch with Ball Joint	414	1,966.00
7461RS	Rear Tow Hitch with Hitch Slide and Ball Joint	435	2,180.00
Rear Tow Hitch for 4 and 6 Section			
5686RS	Rear Tow Hitch with Ball Joint	345	1,490.00
5687RS	Rear Tow Hitch with Hitch Slide and Ball Joint	365	1,703.00
Rear Tow Hitch for 5 and 7 Section			
6058RS	Rear Tow Hitch with Ball Joint	397	2,002.00
6057RS	Rear Tow Hitch with Hitch Slide and Ball Joint	405	2,212.00
17000636BS	Standard Rolling Treader Extension Kit (Converts 28' to 32')	125	1,051.00
16000040RS	Rigid Coulters for SF3030-21	1250	7,440.00
16000047RS	Rigid Coulters for SF3030-25	1425	8,577.00
16000042RS	Rigid Coulters for SF3040-28	1778	9,649.00
16000043RS	Rigid Coulters for SF3040-32	1985	10,994.00
16000044RS	Rigid Coulters for SF3050-35	2085	11,095.00
16000045RS	Rigid Coulters for SF3060-42	2328	13,432.00
16000046RS	Rigid Coulters for SF3070-49	2575	14,911.00
17000545RS	Standard Rolling Treader for SF3030-21	1700	9,634.00
17001210RS	Standard Rolling Treader for SF3030-25	1780	10,568.00
17000528RS	Standard Rolling Treader for SF3040-28	1992	11,038.00
17000691RS	Standard Rolling Treader for SF3040-32	2080	11,526.00
17000527RS	Standard Rolling Treader for SF3050-35	2586	14,960.00
17000529RS	Standard Rolling Treader for SF3060-42	2988	16,807.00
17000530RS	Standard Rolling Treader for SF3070-49	3582	20,044.00
12000657BS	Stripper Kit for Rolling Treaders for SF3030-21	229	1,292.00
12000715BS	Stripper Kit for Rolling Treaders for SF3030-25	232	1,327.00
12000658BS	Stripper Kit for Rolling Treaders for SF3040-28	314	1,704.00
12000711BS	Stripper Kit for Rolling Treaders for SF3040-32	339	1,866.00
12000654BS	Stripper Kit for Rolling Treaders for SF3050-35	387	2,140.00
12000655BS	Stripper Kit for Rolling Treaders for SF3060-42	471	2,596.00
12000656BS	Stripper Kit for Rolling Treaders for SF3070-49	544	2,984.00
17001405RS	Three Row Coil Tine Harrow for SF3030-21	847	4,093.00
17001406RS	Three Row Coil Tine Harrow for SF3030-25	883	4,254.00
17001407RS	Three Row Coil Tine Harrow for SF3040-28	1096	5,329.00
17001408RS	Three Row Coil Tine Harrow for SF3040-32	1146	5,470.00
17001409RS	Three Row Coil Tine Harrow for SF3050-35	1370	6,558.00
17001410RS	Three Row Coil Tine Harrow for SF3060-42	1626	7,799.00
17001411RS	Three Row Coil Tine Harrow for SF3070-49	1881	8,930.00

3300 SERIES SUNFLOWER BLADE PLOWS

F.O.B. Beloit, KS

STANDARD CONFIGURATION

Coulters, Frame Hinges and Lift System Pivot on UHMW Polymer, Zero Maintenance
4 New 12 Ply, 12.5L x 15 Tubeless Tires on 40' Wings
6 New 12 Ply, 12.5L x 15 Tubeless Tires on 52' Wings
4 New 12.5L x 15 (GY FI) Load Range F Tubeless Tires on Center
4 15" x 10" Six Bolt Wheels and Hubs with Zerks, 2" Spindles and Triple Lip Seals 40'
6 15" x 10" Six Bolt Wheels and Hubs with Zerks, 2" Spindles and Triple Lip Seals 52'
4 15" x 10" Eight Bolt Wheels and Hubs with Zerks, 2-3/4" Spindles and Triple Lip Seals
4 4" x 10" Lift Cylinders, 1/2" Hydraulic Hose
2 4" x 36" Fold Cylinders, 1/2" Hydraulic Hose – 40'
4 4" x 24" Fold Cylinders, 1/2" Hydraulic Hose – 52'
1 Tongue Jack
1 Cast Single Lip Hitch with 2" Pin Hole (4781GS)
Rigid Coulter Assemblies, 22" Plain Blades, five Bolt Hubs and Triple Lip Seals
75º Hard-faced Blades, either Top or Bottom Hard-facing (specify)
Regular 75º Welded Standards, 1-1/4" Upright
Warning Light Kit, Complete with Wiring to Tractor
SMV Emblem

These prices reflect the standard configuration. If items other than those listed in the standard configuration are ordered, then the quoted price below will change.

For Quotation Purposes Only – Please Order Items from the Groups on the Next Pages

MODEL NO.	CUTTING WIDTH	NO. OF BLADES AND SIZE	EST. WT.	LIST PRICE
3372-40	40'	7 – 6'	12718	58,186.00
3392-52	52'	9 – 6'	15280	79,446.00

3300 SERIES SUNFLOWER BLADE PLOWS

ORDER CODE	DESCRIPTION	APPROX. WEIGHT (LBS)	LIST PRICE

Select One Order Code from Each Group, 01 through 06.

Group 01 Base Machine

SF3372-40	33724000, 40’ Sunflower Blade Plow	11163	43,747.00
SF3392-52	33925200, 52’ Sunflower Blade Plow	9465	61,218.00

Group 02 Blade Standards Order Qty 7 on 40’ and Qty 9 on 52’

15000061RS	Regular 75º Welded Standards, 1-1/4" Upright, 6’	234	950.00

Group 03 Blades

SF3372-40

1400080S	Set of Seven, 6’ Blades, Top Hard-faced	385	1,634.00
1400081S	Set of Seven, 6’ Blades, Bottom Hard-faced	385	1,634.00

SF3392-52

1400083S	Set of Nine, 6’ Blades, Top Hard-faced	495	2,103.00
1400084S	Set of Nine, 6’ Blades, Bottom Hard-faced	495	2,103.00

Group 04 Rigid Coulters 22” Blades, Five Bolt Hubs and Triple Lip Seals

16000049S	Set of Seven, Rigid Coulter Assemblies for SF3372-40	441	2,398.00
16000048S	Set of Nine, Rigid Coulter Assemblies for SF3392-52	567	3,084.00

Group 05 Tires

MODEL	ORDER QUANTITY	
	CENTER	WINGS
SF3372-40	(4) 5579YS	(4) 3588S
SF3392-52	(4) 5579YS	(6) 3588S

3588S	(1) New 12 Ply, 12.5L x 15 Tubeless Tire for Wings	80	367.00
5579YS	(1) New 12.5L x 15 (GY FI) Load Range F Tubeless Tire . . . for Centers	110	534.00

Group 06 Hitches

4781GS	Cast Single Lip Hitch with 2” Pin Hole	29	153.00
7500103RS	Double Lip Hitch with 1-9/16" Pin Hole	20	153.00

3300 SERIES SUNFLOWER BLADE PLOWS

ORDER CODE	DESCRIPTION	APPROX. WEIGHT (LBS)	LIST PRICE
OPTIONAL EQUIPMENT - For Current Machines ONLY			
9545RS	Rear Tow Hitch with Ball Joint	560	2,302.00
9546RS	Rear Tow Hitch with Hitch Slide and Ball Joint	560	2,516.00
Rear Back Stand (Included with Rolling Treader)			
9353RS	Rear Back Stand for SF3372-40	80	602.00
9273RS	Rear Back Stand for SF3392-52	70	410.00

STANDARD ROLLING TREADERS FOR 3300 SERIES BLADE PLOWS

7/16" x 1-1/2" High Carbon Steel Teeth, 18" Diameter and 8 Teeth per Row
1-1/2" Square Gang Shafts with Triple Sealed Greaseable Bearings
Universal Modular Mounts with Hardware (Includes Rear Back Stand Kit)

MODEL	RECOMMENDED GANGS
SF3372-40	4 - RT12-55R / 3 - RT12-55L
SF3392-52	5 - RT12-55R / 4 - RT12-55L

17001504RS	SF3372-40	3219	18,172.00
17001501RS	SF3392-52	4093	23,363.00

CONSERVATION ROLLING TREADERS WITH HARD-FACED TEETH

3/8" x 1-1/2" High Carbon Steel Teeth, Hard-faced, 20-1/2" Diameter and 7 Teeth per Row
1-1/2" Square Gang Shafts with Triple Sealed Greaseable Bearings Square Bore
All Required Hardware and Mounting Brackets (Includes Rear Back Stand Kit)

MODEL	RECOMMENDED GANGS
SF3372-40	4 - RT12-55R / 3 - RT12-55L
SF3392-52	5 - RT12-55R / 4 - RT12-55L

17001506RS	SF3372-40	3219	23,186.00
17001503RS	SF3392-52	4093	27,142.00

STRIPPER KITS FOR 3300 SERIES BLADE PLOW ROLLING TREADERS

All Mounting Hardware and Components

12000668BS	SF3372-40	337	1,642.00
12000670BS	SF3392-52	433	2,023.00

3300 SERIES SUNFLOWER BLADE PLOWS

ORDER CODE	DESCRIPTION	APPROX. WEIGHT (LBS)	LIST PRICE

STANDARD ROLLING TREADERS FOR 3300 SERIES BLADE PLOWS

7/16" x 1-1/2" High Carbon Steel Teeth, 18" Diameter and 8 Teeth per Row
1-1/2" Square Gang Shafts with Triple Sealed Greaseable Bearings
Universal Modular Mounts with Hardware (Includes Rear Back Stand Kit)

ATTACHMENTS NUMBER	ADAPTS TO	RECOMMENDED GANG
17000391RS	SF3351-23	3 - RSRT10-45R / 2 - RT-45L198
17000394RS	SF3371-33	4 - RT10-45R / 3 - RT10-45L

17000391RS	SF3351-23	. . . . .	1985	11,944.00
17000394RS	SF3371-33	. . . . .	2779	16,694.00

STRIPPER KITS FOR 3300 SERIES BLADE PLOW ROLLING TREADERS

All Mounting Hardware and Components

12000664BS	SF3351-23	. . . . .	212	863.00
12000665BS	SF3351-28	. . . . .	241	1,064.00

3600 SERIES SUNFLOWER/RICHARDSON BLADE PLOWS

F.O.B. Beloit, KS

STANDARD CONFIGURATION

Coulters, Frame Hinges and Lift system Pivot on UHMW Polymer, Maintenance Free
Rigid Coulter Assemblies, 22" Plain Blades, Five Bolt Hubs, and Triple Lip Seals
2" Spindles, Six Bolt Hubs with Zerks and Triple Lip Seals (6 and 7 Section)
2-1/8" Spindles, Six Bolt Hubs with Zerks and Double Lip Seals (9 and 11 Section Plows)
75 Hard-faced Blades, Choice of Top or Bottom Hard-facing (specify)
Blade Sizes per Model:

3662 – (2) 5', (1) 5-1/4', (3) 5-1/2'
3672 – (3) 5', (4) 5-1/2'
3692 – (3) 5', (2) 5-1/4', (4) 5-1/2'
3612 – (3) 5', (4) 5-1/4', (4) 5-1/2'

75 Welded Standards, 1-1/4" Upright
Plumbing to Front of Plow
Tongue Jack, All Models
Single Lip Hitch with 2-1/4" Pin Hole
Warning Light Kit, Complete with Wiring to Tractor
SMV Emblem

These prices reflect the standard configuration. If items other than those listed in the standard configuration are ordered, then the quoted price below will change.

For Quotation Purposes Only – Please Order Items from the Groups on the Next Pages

MODEL NO.	WIDTH OF CUT	TYPE OF FOLD	NO. OF BLADES	EST. WT.	LIST PRICE
SF3662-30	30' 6"	2 - 2	6	9294	44,948.00
SF3672-35	35' 6"	2 - 2	7	10557	50,203.00
SF3692-45	45' 6"	3 - 3	9	16511	76,582.00
SF3612-55	55' 6"	4 - 4	11	21058	93,341.00

3600 SERIES SUNFLOWER/RICHARDSON BLADE PLOWS

ORDER CODE	DESCRIPTION	APPROX. WEIGHT (LBS)	LIST PRICE

Select One Order Code from Each Group, 01 through 06.

Group 01 Base Machine

SF3662-30	36623000, 30’ Sunflower/Richardson Blade Plow	6181	33,748.00
SF3672-35	36723500, 35’ Sunflower/Richardson Blade Plow	6954	37,221.00
SF3692-45	36924500, 45’ Sunflower/Richardson Blade Plow	11725	59,300.00
SF3612-55	36125500, 55’ Sunflower/Richardson Blade Plow	15256	72,492.00

Group 02 Blade Standards Regular 75º Welded Standards, 1¼" Upright

15000149RS	Regular 75º Welded Standards for SF3662-30.	1319	5,606.00
15000151RS	Regular 75º Welded Standards for SF3672-35.	1533	6,540.00
15000153RS	Regular 75º Welded Standards for SF3692-45.	1978	8,407.00
15000155RS	Regular 75º Welded Standards for SF3612-55.	2424	10,277.00

Group 03 Blades

MODEL	TOTAL QUANTITY OF BLADES	QTY AND BLADE SIZES
SF3662-30	6	Two 5’, One 5 ¼’, Three 5 ½’
SF3672-35	7	Three 5’, Four 5 ½’
SF3692-45	9	Three 5’, Two 5 ¼’, Four 5 ½’
SF3612-55	11	Three 5’, Four 5 ¼’, Four 5 ½’

1400149S	Set of Top Hard-faced for SF3662-30	306	1,169.00
1400150S	Set of Bottom Hard-faced for SF3662-30.	306	1,169.00
1400152S	Set of Top Hard-faced for SF3672-35	351	1,362.00
1400153S	Set of Bottom Hard-faced for SF3672-35.	351	1,362.00
1400155S	Set of Top Hard-faced SF3692-45	459	1,753.00
1400156S	Set of Bottom Hard-faced SF3692-45	459	1,753.00
1400158S	Set of Top Hard-faced for SF3612-55	567	2,140.00
1400159S	Set of Bottom Hard-faced for SF3612-55.	567	2,140.00

Group 04 Rigid Coulters Order One per Blade

16000052RS	Rigid Coulter Assemblies	162	313.00
	22” Blades, Five Bolt Hubs and Triple Lip Seals		

3600 SERIES SUNFLOWER/RICHARDSON BLADE PLOWS

ORDER CODE	DESCRIPTION	APPROX. WEIGHT (LBS)	LIST PRICE

Select One Order Code from Each Group, 01 through 06.

Group 05 Tires

MODEL	ORDER QUANTITY	
	CENTERS	WINGS
SF3662-30	(3) 6190YS	(4) 6190YS
SF3672-35	(4) 6190YS	(4) 6190YS
SF3692-45	(6) 3587YS	(6) 6190YS
SF3612-55	(8) 3587YS	(6) 6190YS

6190YS	(1) New 12 Ply, 11 L x 15 Tubeless Tire, 8 Bolt Wheel	69	342.00
3587YS	(1) New 12 Ply, 11 L x 15 Tubeless Tire, 8 Bolt Wheel . . . . For use on SF3692-45 and SF3612-55 Centers	74	350.00

Group 06 Hitches

9689GS	Cast Single Lip Hitch with 2-1/4" Pin Hole	33	153.00
9656RS	Double Lip Hitch with 1-9/16" Pin Hole . . . . . For use on SF3662-30 and SF3672-35 Only	17	153.00

OPTIONAL EQUIPMENT - For Current Machines ONLY

9594RS	Rear Jack Mount Kit (Included with Rolling Treader).	48	244.00
7500031RS	NH3 Reacher Hitch with Parts Box	278	1,809.00

3600 SERIES SUNFLOWER/RICHARDSON BLADE PLOWS

MODEL	RECOMMENDED GANGS For Std Rolling Treaders and Conservation Rolling Treaders
SF3662-30	1 - RT10-45R / 1 - RT10-45L 2 - RT11-50R / 2 - RT11-50L
SF3672-35	2 - RT10-45R / 1 - RT10-45L 2 - RT11-50R / 2 - RT11-50L
SF3692-45	2 - RT10-45R / 2 - RT10-45L 3 - RT11-50R / 2 - RT11-50L
SF3612-55	3 - RT10-45R / 2 - RT10-45L 3 - RT11-50R / 3 - RT11-50L

ORDER CODE	DESCRIPTION	APPROX. WEIGHT (LBS)	LIST PRICE

STANDARD ROLLING TREADERS FOR 3600 SERIES BLADE PLOWS

7/16" x 1-1/2" High Carbon Steel Teeth, 18" Diameter and 8 Teeth per Row
1-1/2" Square Gang Shafts with Triple Sealed Greaseable Bearings
All Required Hardware and Mounting Brackets (Includes Rear Back Stand Kit)

17000463RS	SF3662-30 (2 - 2 Type of Fold)	2462	14,365.00
17000464RS	SF3672-35 (2 - 2 Type of Fold)	2859	16,758.00
17000465RS	SF3692-45 (3 - 3 Type of Fold)	3673	21,547.00
17000466RS	SF3612-55 (4 - 4 Type of Fold)	4487	26,336.00

CONSERVATION ROLLING TREADERS WITH HARD-FACED TEETH

3/8" x 1-1/2" High Carbon Steel Teeth, Hard-faced, 20-1/2" Diameter and 7 Teeth per Row
1-1/2" Square Gang Shafts with Triple Sealed Greaseable Bearings
All Required Hardware and Mounting Brackets (Includes Rear Back Stand Kit)

17001197RS	SF3662-30 (2 - 2 Type of Fold)	2462	16,884.00
17001198RS	SF3672-35 (2 - 2 Type of Fold)	2859	19,698.00
17001199RS	SF3692-45 (3 - 3 Type of Fold)	3673	25,328.00
17001200RS	SF3612-55 (4 - 4 Type of Fold)	4487	30,955.00

STRIPPER KITS FOR 3600 SERIES BLADE PLOW ROLLING TREADERS

All Mounting Hardware and Components

12000675BS	SF 3662-30	267	1,530.00
12000677BS	SF 3672-35	309	1,766.00
12000679BS	SF 3692-45	397	2,233.00
12000683BS	SF 3612-55	485	2,723.00

FACTORY OR DEALERSHIP ASSEMBLY AMOUNTS ON 4000 SERIES

(DISCOUNTS DO NOT APPLY)

The factory or dealership set-up amounts will be charged for machines set-up by Sunflower. Set-up amounts are the same whether machines are shipped via our truck (gangs off wings, etc.) or set-up completely and picked up by dealer's truck. Factory assembly charge includes hydraulic hose, hydraulic oil, and tips (hydraulic system is charged). Dealer location assembly charge includes hydraulic hose, and tips. (Hydraulic oil is not included) See note below.

MODEL NUMBER	FACTORY ORDER CODE	FACTORY SET-UP RATES	DEALER LOCATION ORDER CODE	DEALER LOCATION SET-UP RATE
SF4213-07 (manual reset or shear bolt) ♦	SET0199S	920.00	SET0199DS	964.00
SF4213-09 (manual reset or shear bolt) ♦	SET0200S	967.00	SET0200DS	1,013.00
SF4213-11 (manual reset or shear bolt) ♦	SET0201S	1,091.00	SET0201DS	1,143.00
SF4213-13 (manual reset or shear bolt) ♦	SET0202S	1,147.00	SET0202DS	1,201.00
SF4213-15 (manual reset or shear bolt) ♦	SET0203S	1,212.00	SET0203DS	1,269.00
SF4233-17 (manual reset or shear bolt) ♦	SET0213S	1,705.00	SET0213DS	1,786.00
SF4233-19 (manual reset or shear bolt) ♦	SET0214S	1,764.00	SET0214DS	1,848.00
SF4233-21 (manual reset or shear bolt) ♦	SET0215S	1,875.00	SET0215DS	1,965.00
SF4233-23 (manual reset or shear bolt) ♦	SET0216S	1,944.00	SET0216DS	2,036.00
SF4511-09 (manual reset or shear bolt)	SET0117S	1,516.00	SET0117DS	1,588.00
SF4511-11 (manual reset or shear bolt)	SET0118S	1,603.00	SET0118DS	1,680.00
SF4511-13 (manual reset or shear bolt)	SET0119S	1,743.00	SET0119DS	1,826.00
SF4511-15 (manual reset or shear bolt)	SET0120S	1,875.00	SET0120DS	1,965.00
SF4530-19 (manual reset or shear bolt)	SET0121S	2,349.00	SET0121DS	2,461.00
SF4213-07 (auto reset)	SET0204S	1,091.00	SET0204DS	1,143.00
SF4213-09 (auto reset)	SET0205S	1,175.00	SET0205DS	1,231.00
SF4213-11 (auto reset)	SET0206S	1,299.00	SET0206DS	1,361.00
SF4213-13 (auto reset)	SET0207S	1,384.00	SET0207DS	1,450.00
SF4213-15 (auto reset)	SET0208S	1,458.00	SET0208DS	1,528.00
SF4233-17 (auto reset)	SET0209S	1,961.00	SET0209DS	2,055.00
SF4233-19 (auto reset)	SET0210S	2,048.00	SET0210DS	2,145.00
SF4233-21 (auto reset)	SET0211S	2,217.00	SET0211DS	2,322.00
SF4233-23 (auto reset)	SET0212S	2,294.00	SET0212DS	2,404.00
SF4412-05 (auto reset)	SET0100S	1,705.00	SET0100DS	1,786.00
SF4412-07 (auto reset)	SET0101S	1,857.00	SET0101DS	1,946.00
SF4511-09 (auto reset)	SET0103S	1,705.00	SET0103DS	1,786.00
SF4511-11 (auto reset)	SET0104S	1,849.00	SET0104DS	1,937.00
SF4511-13 (auto reset)	SET0105S	2,010.00	SET0105DS	2,105.00
SF4511-15 (auto reset)	SET0106S	2,180.00	SET0106DS	2,284.00
SF4530-19 (auto reset)	SET0107S	2,728.00	SET0107DS	2,858.00
Coil Tine Harrow	SET0033S	22.00 per foot	SET0033DS	23.00 per foot
Rolling Treaders	SET0123S	53.00 per gang	SET0123DS	55.00 per gang
Chopper Reels	SET0124S	9.00 per foot	SET0124DS	10.00 per foot
Five Row Spike Drag	SET0125S	18.00 per foot	SET0125DS	20.00 per foot

SUNFLOWER RECOMMENDS THESE SET-UP FIGURES BE USED BY DEALERS WHEN TRANSFERRING EQUIPMENT

♦ *Frames are over-width (9' 6") and will require special handling and/or permits.*

Dealership Assembly requirements:

1. The dealership assembly service must be ordered separately from the implement. (initiates scheduling of service) Please order dealership assembly service from the field installed options tab in e-ordering.
2. Include in the dealership assembly order request the order and/or invoice number of the implement to be assembled.
3. Dealer supplies hydraulic oil (oil is not included).
4. Dealer supplies a fork lift of sufficient size to be used by AGCO's assembly crew.

DEALERSHIP ASSEMBLY AMOUNTS ON 4000 SERIES
(DISCOUNTS DO NOT APPLY)

The factory or dealership set-up amounts will be charged for machines set-up by Sunflower. Set-up amounts are the same whether machines are shipped via our truck (gangs off wings, etc.) or set-up completely and picked up by dealer's truck. Factory assembly charge includes hydraulic hose, hydraulic oil, and tips (hydraulic system is charged). Dealer location assembly charge includes hydraulic hose, and tips. (Hydraulic oil is not included) See note below.

MODEL NUMBER	DEALER LOCATION ORDER CODE	DEALER LOCATION SET-UP RATE
SF4610-7	SET0279DS	1700.00
SF4610-9	SET0280DS	1900.00
SF4630-9	SET0281DS	2100.00
SF4630-11	SET0282DS	2300.00
SF4630-13	SET0283DS	2500.00
SF4710-4	SET0284DS	800.00
SF4710-5	SET0285DS	900.00
SF4710-6	SET0286DS	1000.00
SF4710-7	SET0287DS	1100.00
SF4710-8	SET0288DS	1200.00
SF4730-8	SET0289DS	1700.00
SF4730-12	SET0290DS	1900.00
HD Coil Tine	SET0291DS	23.00 per foot
Coil Tine & Reel	SET0292DS	25.00 per foot
Coil Tine & Active Hyd Down Pressure Reel	SET0293DS	27.00 per foot
Spike Drag Harrow	SET0294DS	20.00 per foot
4700 Series Row Attachments	SET0295DS	40.00 per foot

SUNFLOWER RECOMMENDS THESE SET-UP FIGURES BE USED BY DEALERS WHEN TRANSFERRING EQUIPMENT

♦ *Frames are over-width (9' 6") and will require special handling and/or permits.*

Dealership Assembly requirements:

1. The dealership assembly service must be ordered separately from the implement. (initiates scheduling of service) Please order dealership assembly service from the field installed options tab in e-ordering.
2. Include in the dealership assembly order request the order and/or invoice number of the implement to be assembled.
3. Dealer supplies hydraulic oil (oil is not included).
4. Dealer supplies a fork lift of sufficient size to be used by AGCO's assembly crew.

4213 SERIES RIGID COULTER CHISEL

F.O.B. Beloit, KS

7 THROUGH 15 SHANK MODEL

STANDARD CONFIGURATION

4 New 12 Ply, 11L x 15 Tubeless Tires on 7 and 9 Shank Machines
4 New 12 Ply, 12.5L x 15 Tubeless Tires on 11-15 Shank Machines
4 15" x 10" Six Bolt Wheels and Hubs with 2" Slip-in Spindles and Triple Lip Seals
2 Walking Beams with Greaseable Tapered Roller Bearings
1 Double Lip Hitch with 1-1/4" Pin Hole (7 and 9 shank) (7500112S)
1 Cast Single Lip Hitch with 2" Oblong Pin Hole (11, 13 and 15 shank) (7500114S)
1 4" x 16" Lift Cylinder with Hoses and Hardware
1 Single Point Front Mounted Hydraulic Depth Control
1 Hydraulic Coulter Gang Adjustment with 2 Rephasing Cylinders, Hoses, Hardware and Depth Gauge
1 Tongue Jack
Maintenance Free Lift Axles using UHMW Polymer
15" Shank Spacing
1-3/4" Coulter Gang Shafts with Triple Sealed Greaseable Bearings
C-Flex Coulter Gang Hangers
Channel Iron Trash Bars Between Coulter Blades
20" Plain Coulter Blades 1/4" Thick on 7-1/2" Centers
4" One Piece Twisted Shovels, 1/2" Thick
Rear Back Stand (Less Jack)
Safety Chain and Light Kit, Complete with Wiring to Tractor
SMV Emblem

MODEL	4213-7	4213-9	4213-11	4213-13	4213-15
NUMBER OF SECTIONS	1	1	1	1	1
TRANSPORT WIDTH	9' 8"	10' 11"	14' 3"	16' 2"	18' 8"
COULTER BLADE SPACING	7 ½"	7 ½"	7 ½"	7 ½"	7 ½"
NUMBER OF COULTER GANGS	2	2	2	2	4
NUMBER OF BEARINGS	4	4	6	6	8

These prices reflect the standard configuration. If items other than those listed in the standard configuration are ordered, then the quoted price below will change.

For Quotation Purposes Only – Please Order Items from the Groups on the Next Pages

MODEL NUMBER	CUTTING WIDTH	NUMBER OF SHANKS	NUMBER OF COULTERS	EST WTS	20" ¼" THICK BLADES
RIGID SHEAR BOLT MOUNT SHANKS (1½" x 2" x 30" ON-EDGE)					
SF4213-07	8' 9"	7	14	6068	24,047.00
SF4213-09	11' 3"	9	18	6632	26,262.00
SF4213-11	13' 9"	11	22	7602	30,604.00
SF4213-13	16' 3"	13	26	8162	32,869.00
SF4213-15	18' 9"	15	30	9209	36,243.00
AUTO RESET MOUNT SHANKS (1¼" x 2½" x 30" ON-EDGE)					
SF4213-07	8' 9"	7	14	6760	28,814.00
SF4213-09	11' 3"	9	18	7522	32,391.00
SF4213-11	13' 9"	11	22	8690	38,095.00
SF4213-13	16' 3"	13	26	9448	41,722.00
SF4213-15	18' 9"	15	30	10692	46,458.00

4213 SERIES RIGID COULTER CHISEL

ORDER CODE	DESCRIPTION	APPROX. WEIGHT (LBS)	LIST PRICE
	Select One Order Code from Each Group, 01 through 06.		
Group 01 Base Machine			
SF4213-07	42130700, 7 Shank Rigid Coulter Chisel	4417	15,876.00
SF4213-09	42130900, 9 Shank Rigid Coulter Chisel	4552	16,661.00
SF4213-11	42131100, 11 Shank Rigid Coulter Chisel	5123	19,045.00
SF4213-13	42131300, 13 Shank Rigid Coulter Chisel	5253	19,804.00
SF4213-15	42131500, 15 Shank Rigid Coulter Chisel	5973	21,212.00
Group 02 Coulter Gangs 20" PLAIN COULTER BLADES ON 7½" CENTERS			
SF4213-07			
12301550S	20" 4 Gauge, Blades	882	4,185.00
SF4213-09			
12301551S	20" 4 Gauge, Blades	1174	4,919.00
SF4213-11			
12301552S	20" 4 Gauge, Blades	1430	6,113.00
SF4213-13			
12301553S	20" 4 Gauge, Blades	1722	6,923.00
SF4213-15			
12301554S	20" 4 Gauge, Blades	1910	8,193.00
Group 03 Shanks			
SF4213-07			
7500560S	Shank Assy, Rigid Shear Bolt, 1-1/2" x 2" x 30" on Edge	395	2,114.00
7500559S	Shank Assy, Auto Reset, 1-1/4" x 2-1/2" x 30" on Edge	1285	6,881.00
SF4213-09			
7500562S	Shank Assy, Rigid Shear Bolt, 1-1/2" x 2" x 30" on Edge	504	2,718.00
7500561S	Shank Assy, Auto Reset, 1-1/4" x 2-1/2" x 30" on Edge	1652	8,847.00
SF4213-11			
7500558S	Shank Assy, Rigid Shear Bolt, 1-1/2" x 2" x 30" on Edge	616	3,322.00
7500557S	Shank Assy, Auto Reset, 1-1/4" x 2-1/2" x 30" on Edge	2019	10,813.00
SF4213-13			
7500564S	Shank Assy, Rigid Shear Bolt, 1-1/2" x 2" x 30" on Edge	730	3,926.00
7500563S	Shank Assy, Auto Reset, 1-1/4" x 2-1/2" x 30" on Edge	2385	12,779.00
SF4213-15			
7500566S	Shank Assy, Rigid Shear Bolt, 1-1/2" x 2" x 30" on Edge	730	4,530.00
7500565S	Shank Assy, Auto Reset, 1-1/4" x 2-1/2" x 30" on Edge	2753	14,745.00

4213 SERIES RIGID COULTER CHISEL

ORDER CODE	DESCRIPTION	APPROX. WEIGHT (LBS)	LIST PRICE

Select One Order Code from Each Group, 01 through 06.

Group 04 Shovels / Points

MODEL	ORDER QUANTITY (LEFT & RIGHT)		ORDER QTY
	RIGHT TWISTED	LEFT TWISTED	POINTS
SF4213-07	4	3	7
SF4213-09	5	4	9
SF4213-11	6	5	11
SF4213-13	7	6	13
SF4213-15	8	7	15

Right Twisted

1400041S	1/2" x 4" x 22" One Piece Twisted Shovel	13	46.00
1400005S	1/2" x 3" x 22" One Piece Twisted Shovel	9	46.00

Left Twisted

1400042S	1/2" x 4" x 22" One Piece Twisted Shovel	13	46.00
1400006S	1/2" x 3" x 22" One Piece Twisted Shovel	9	46.00

Points

1400163S	1” x 2" x 18" Heavy Duty Reversible Point	9	36.00

Group 05 Tires Order Quantity of 4

7 & 9 shanks order 3587YS, all others order 3588S

3587YS	(1) New 11L x 15 Tubeless Tire, 12 Ply . . . . . 6 Bolt Wheel (15" x 10")		350.00
3588S	(1) New 12.5L Tubeless Tire, 12 Ply, 6 Bolt Wheel (15" x 10") .	80	367.00

Group 06 Hitches

7 & 9 Shank Models

7500112S	Double Lip Hitch with 1-1/4" Pin Hole	20	150.00
7500111S	Double Lip Hitch with 1-13/16" Pin Hole	20	150.00
7500113S	Cast Single Lip Hitch with 1-1/2” Pin Hole	20	150.00

11, 13, 15 Shank Models

7500114S	Cast Single Lip Hitch with 2” Pin Hole	29	150.00
7500111S	Double Lip Hitch with 1-13/16" Pin Hole	20	150.00

OPTIONAL EQUIPMENT - For Current Machines ONLY

5945RS	Offset Shank Extension Kit (To Stagger Rear Row of Shanks) . . (Order 2 on 7 and 9 shank models. Order 3 on 11 to 15 shank models.) Recommended In Heavy Residue Conditions	49	292.00
18663BS	Gang Wrench, 2 3/4"	20	89.00

4213 SERIES RIGID COULTER CHISEL

ORDER CODE	DESCRIPTION	APPROX. WEIGHT (LBS)	LIST PRICE

FIVE ROW SPIKE DRAGS

All Required Hardware and Mounting Brackets
Five Rows of 3/4" x 11" Square Spikes on 9" Centers, 3" Spacing Overall

MODEL	SECTION SIZE	ARMS
SF4213-07	9 ½'	3
SF4213-09	12 ½'	3
SF4213-11	6 ½' 8'	4
SF4213-13	8' 8'	4
SF4213-15	9 ½' 9 ½'	4

17001680RS	SF4213-07	673	2,615.00
17001681RS	SF4213-09	783	2,928.00
17001682RS	SF4213-11	966	3,591.00
17001683RS	SF4213-13	1021	3,703.00
17001684RS	SF4213-15	1329	4,706.00

The Following Arm Extensions Must Be Ordered with Five Row Spike Drags on SF4213's Equipped with Auto-Reset Shanks

7045RS	Harrow Arm Extension (Order One per Arm)	22	76.00

THREE ROW COIL TINE HARROW - HEAVY DUTY

Spring Loaded Parallel Drag Arms with all Required Hardware and Mounting Brackets
Three Rows of 5/8" x 30" Coil Tines on 12" Centers, 4" Spacing Overall, with Angle Adjustment and Backup Protection
13" Spacing

MODEL	SECTION SIZE	ARMS
SF4213-07	10'	2
SF4213-09	6' 6'	4
SF4213-11	8' 8'	4
SF4213-13	10' 8'	4
SF4213-15	10' 10'	4

17001737RS	SF4213-07	952	3,382.00
17001738RS	SF4213-09	1135	5,088.00
17001739RS	SF4213-11	1315	5,676.00
17001740RS	SF4213-13	1540	6,029.00
17001741RS	SF4213-15	1615	6,676.00

The Following Arm Extensions Must Be Ordered with 3 Row Coil Tine Harrow on SF4213's Equipped with Auto-Reset Shanks and Offset Shank Mount Kit (5945RS). These Arm Extensions are not required with Rigid Shear Bolt Shanks and Offset Shank Mount.

16562RS	Harrow Arm Extension for 7 shank (Order One per Attachment)	146.00
16563RS	Harrow Arm Extension for 9 to 15 shank (Order One per Attachment)	301.00

4213 SERIES RIGID COULTER CHISEL ATTACHMENTS

ORDER CODE	DESCRIPTION	APPROX. WEIGHT (LBS)	LIST PRICE

REAR CHOPPER REELS

16" Diameter Reel with 15" Offset Blades
Two Trunnion Bearings, Triple Sealed and Greaseable, per Reel
All Mounting Arms and Hardware

MODEL	SECTION SIZE	ARMS
SF4213-07	60" 75"	4
SF4213-09	75" 75"	4
SF4213-11	90" 90"	4
SF4213-13	75" 60" 75"	6
SF4213-15	75" 90" 75"	6

17001675RS	SF4213-07	1054	5,244.00
17001676RS	SF4213-09	1146	5,725.00
17001677RS	SF4213-11	1536	7,716.00
17001678RS	SF4213-13	1860	8,959.00
17001679RS	SF4213-15	1975	9,353.00

ROLLING TREADERS - (Not Recommended in Rocky Conditions)

7/16" x 1-1/2" High Carbon Steel Teeth, 18" Diameter and 8 Teeth per Row
1-1/2" Square Gang Shafts with Triple Sealed Greaseable Bearings, Square Bore
Universal Modular Mounts with Hardware

MODEL	RECOMMENDED GANGS
SF4213-07	1 - RT10-45R / 1 - RT10-45L
SF4213-09	1 - RT12-55R / 1 - RT12-55L
SF4213-11	1 - RT15-70R / 1 - RT15-70L
SF4213-13	1 - RT8-35R / 1 - RT8-35L 1 - RT10-45R / 1 - RT10-45L
SF4213-15	2 - RT10-45R / 2 - RT10-45L

17001670RS	SF4213-07	794	4,983.00
17001671RS	SF4213-09	1034	6,077.00
17001672RS	SF4213-11	1156	6,557.00
17001673RS	SF4213-13	1563	10,115.00
17001674RS	SF4213-15	1688	10,462.00

STRIPPER KITS FOR 4213 SERIES TRASH MULCHER ROLLING TREADERS

12000720BS	4213-07	85	510.00
12000721BS	4213-09	96	585.00
12000722BS	4213-11	157	869.00
12000723BS	4213-13	157	892.00
12000724BS	4213-15	169	974.00

4233 SERIES 3 SECTION FLEXIBLE COULTER CHISEL

F.O.B. Beloit, KS

STANDARD CONFIGURATION

4 New 12.5L x 15 (GY - FI) Load Range F, Tubeless Tires (Center) (5555YS)
4 New 12 Ply, 12.5L x 15 Tubeless Tires (Wings) (3588S)
4 15" x 10" Eight Bolt Wheels and Hubs with 2-1/4" Slip-in Spindles and Triple Lip Seals (Center)
4 15" x 10" Six Bolt Wheels and Hubs with 2" Slip-in Spindles and Triple Lip Seals (Wings)
4 Walking Beams with Greaseable Tapered Roller Bearings
1 Hydraulic Coulter Gang Adjustment with 4 Rephasing Cylinders, Hoses, and Hardware
2 4" x 24" Fold Cylinders with Hoses and Hardware (17 and 19 Shank Models)
4 4" x 24" Fold Cylinders with Hoses and Hardware (21 and 23 Shank Models)
1 Rephasing Lift System Consisting of two 4" x 16" and two 3-3/4" x 16" Hydraulic Cylinders with Hoses and Hardware
1 Single Point Front Mounted Hydraulic Depth Control
1 Tongue Jack
1 Cast Single Lip Hitch with 2" Oblong Hole
1 Rear Back Stand (Auto Reset Shank Models Only)
Maintenance Free 5-1/2" Lift Axle Using UHMW Polymer
15" Shank Spacing
1-3/4" Coulter Gang Shafts with Tripled Sealed Greaseable Trunnion Style Bearings
C-Flex Coulter Gang Hangers
Channel Iron Trash Bars Between Coulter Blades
20" Plain Coulter Blades 1/4" Thick on 7-1/2" Centers
4" One Piece Twisted Shovels, 1/2" Thick
Safety Chain and Warning Light Kit, Complete with Wiring to Tractor
SMV Emblem

MODEL	4233-17	4233-19	4233-21	4233-23
Number of Sections	3	3	3	3
Cutting Width	21' 3"	23' 9"	26' 3"	28' 9"
Transport Width	14' 6"	14' 6"	14' 6"	14' 6"
Transport Height	10' 3"	11' 7"	13' 1"	14'
Number of Shanks	17	19	21	23
Shank Spacing	15"	15"	15"	15"
No. of Coulter Gangs	4	4	4	4
Coulter Blade Spacing	7.5"	7.5"	7.5"	7.5"
Number of Bearings	8	10	10	12

These prices reflect the standard configuration. If items other than those listed in the standard configuration are ordered, then the quoted price below will change.

For Quotation Purposes Only – Please Order Items from the Groups on the Next Pages

MODEL NUMBER	CUTTING WIDTH	NUMBER OF SHANKS	NUMBER OF COULTERS	EST WTS	20" ¼" THICK BLADES
RIGID SHEAR BOLT MOUNT SHANKS (1½" x 2" x 30" ON-EDGE)					
SF4233-17	21' 3"	17	34	12804	55,095.00
SF4233-19	23' 9"	19	38	13410	58,366.00
SF4233-21	26' 3"	21	42	14364	62,480.00
SF4233-23	28' 9"	23	46	14770	65,118.00
AUTO RESET MOUNT SHANKS (1¼" x 2½" x 30" ON-EDGE)					
SF4233-17	21' 3"	17	34	14487	66,672.00
SF4233-19	23' 9"	19	38	15291	71,305.00
SF4233-21	26' 3"	21	42	16443	76,781.00
SF4233-23	28' 9"	23	46	17047	80,781.00

Auto Reset Shanks Feature Maximum Point Load Of 1,500 Lbs. And Maximum Vertical Trip Height Of 13". These Shanks Are Recommended In Rock Or Hard Ground Conditions.

4233 SERIES 3 SECTION FLEXIBLE COULTER CHISEL

ORDER CODE	DESCRIPTION	APPROX. WEIGHT (LBS)	LIST PRICE

Select One Order Code from Each Group, 01 through 06.

Group 01 Base Machine

SF4233-17	42331700, 17 Shank Rigid 3 Section Trash Mulcher.	9370	36,182.00
SF4233-19	42331900, 19 Shank Rigid 3 Section Trash Mulcher.	9575	37,592.00
SF4233-21	42332100, 21 Shank Rigid 3 Section Trash Mulcher.	10099	40,221.00
SF4233-23	42332300, 23 Shank Rigid 3 Section Trash Mulcher.	9128	40,904.00

Group 02 Gangs 20" PLAIN COULTER BLADES ON 7½" CENTERS

SF4233-17

12301555S	20" 4 Gauge, C-Flex	2232	9,457.00

SF4233-19

12301556S	20" 4 Gauge, C-Flex	2495	10,622.00

SF4233-21

12301557S	20" 4 Gauge, C-Flex	2787	11,411.00

SF4233-23

12301558S	20" 4 Gauge, C-Flex	4026	12,670.00

Group 03 Shanks Order Quantity Indicated Above

9503RS	Shank Assy, Rigid Shear Bolt, 1-1/2" x 2" x 30" on Edge . . .	56	302.00
12574RS	Shank Assy, Auto Reset, 1-1/4" x 2-1/2" x 30" on Edge	155	983.00

4233 SERIES 3 SECTION FLEXIBLE COULTER CHISEL

ORDER CODE	DESCRIPTION	APPROX. WEIGHT (LBS)	LIST PRICE

Select One Order Code from Each Group, 01 through 06.

Group 04 Shovels / Points

MODEL	ORDER QUANTITY (LEFT & RIGHT)		ORDER QTY
	RIGHT TWISTED	LEFT TWISTED	POINTS
SF4233-17	9	8	17
SF4233-19	10	9	19
SF4233-21	11	10	21
SF4233-23	12	11	23

Right Twisted

1400041S	1/2" x 4" x 22" One Piece Twisted Shovel	13	46.00
1400005S	1/2" x 3" x 22" One Piece Twisted Shovel	9	46.00

Left Twisted

1400042S	1/2" x 4" x 22" One Piece Twisted Shovel	13	46.00
1400006S	1/2" x 3" x 22" One Piece Twisted Shovel	9	46.00

Points

1400163S	1” x 2" x 18" Heavy Duty Reversible Point	9	36.00

Group 05 Tires, Wings – Must order 4

3588S	(1) New 12 Ply, 12.5L x 15 Tubeless Tire, 6 Bolt Wheel	80	367.00

Group 06 Tires, Centers – Must order 4

5555YS	(1) New 12.5L (GY - FI - F) Tubeless Tire, 8 Bolt Wheel . . .	104	518.00

OPTIONAL EQUIPMENT

5945RS	Offset Shank Extension Kit	49	292.00
	(To Stagger Rear Row of Shanks) (Order 4 on 17 Shank Models) (Order 5 on 19 and 21 Shank Models) (Order 6 on 23 Shank Models)		
	*Recommended For Heavy Residue Conditions		
18663BS	Gang Wrench, 2-3/4"	20	89.00

4233 SERIES 3 SECTION FLEXIBLE COULTER CHISEL ATTACHMENTS

ORDER CODE	DESCRIPTION	APPROX. WEIGHT (LBS)	LIST PRICE

FIVE ROW SPIKE DRAGS

All Required Hardware and Mounting Brackets
Five Rows of 3/4" x 11" Square Spikes on 9" Centers, 3" Spacing Overall

MODEL	SECTION SIZE	ARMS
SF4233-17	5½' 10¼' 5½'	6
SF4233-19	7' 10¼' 7'	6
SF4233-21	8' 10¼' 8'	6
SF4233-23	9½' 10¼' 9½'	6

17001687RS	SF4233-17	1450	5,499.00
17001690RS	SF4233-19	1561	5,762.00
17001694RS	SF4233-21	1579	5,845.00
17001698RS	SF4233-23	1664	6,093.00

The Following Arm Extensions Must Be Ordered with Five Row Spike Drags on SF4233's Equipped with Auto-Reset Shanks

7045RS	Harrow Arm Extension (Order One per Arm)	22	76.00

THREE ROW COIL TINE HARROW - HEAVY DUTY

Spring Loaded Parallel Drag Arms with all Required Hardware and Mounting Brackets
Three Rows of 5/8" x 30" Coil Tines on 12" Centers, 4" Spacing Overall, with Angle Adjustment and Backup Protection
13" Spacing

MODEL	SECTION SIZE	ARMS
SF4233-17	6' 10' 6'	6
SF4233-19	8' 10' 8'	6
SF4233-21	10' 8' 10'	6
SF4233-23	10' 10' 10'	6

17001742RS	SF4233-17	1675	8,087.00
17001743RS	SF4233-19	1825	8,676.00
17001744RS	SF4233-21	1845	9,088.00
17001745RS	SF4233-23	1865	9,323.00

The Following Arm Extensions Must Be Ordered with 3 Row Coil Tine Harrow on SF4233's Equipped with Auto-Reset Shanks and Offset Shank Mount Kit (5945RS). These Arm Extensions are not required with Rigid Shear Bolt Shanks and Offset Shank Mount.

16566RS	Harrow Arm Extension (Order One per Attachment)		453.00

4233 SERIES 3 SECTION FLEXIBLE COULTER CHISEL ATTACHMENTS

ORDER CODE	DESCRIPTION	APPROX. WEIGHT (LBS)	LIST PRICE

REAR CHOPPER REELS

16" Diameter Reel with 15" Offset Blades
Two Trunnion Bearings, Triple Sealed and Greaseable, per Reel
All Mounting Arms and Hardware

MODEL	SECTION SIZE	ARMS
SF4233-17	90" 90" 90"	6
SF4233-19	90" 60" 60" 90"	8
SF4233-21	45" 75" 90" 75" 45"	10
SF4233-23	60" 75" 90" 75" 60"	10

17001685RS	SF4233-17	2002	9,411.00
17001688RS	SF4233-19	2332	11,376.00
17001691RS	SF4233-21	2731	13,032.00
17001695RS	SF4233-23	2842	13,728.00

ROLLING TREADERS - (Not Recommended in Rocky Conditions)

7/16" x 1-1/2" High Carbon Steel Teeth, 18" Diameter and 8 Teeth per Row
1-1/2" Square Gang Shafts with Triple Sealed Greaseable Bearings, Square Bore
Universal Modular Mounts with Hardware

MODEL	RECOMMENDED GANGS
SF4233-17	1 - RT8-35R / 1 - RT8-35L & 1 - RT15-70R / 1 - RT15-70L
SF4233-19	1 - RT8-35R / 1 - RT8-35L & 1 - RT17-80R / 1 - RT17-80L
SF4233-21 (Rigid)	1 - RT8-35R / 1 - RT8-35L & 1 - RT9-40R / 1 - RT9-40L & 1 - RT11-50R / 1 - RT11-50L
SF4233-21 (Auto)	2 - RT8-35R / 2 - RT8-35L & 1 - RT13-60R / 1 - RT13-60L
SF4233-23 (Rigid)	1 - RT8-35R / 1 - RT8-35L & 1 - RT9-40R / 1 - RT9-40L & 1 - RT13-60R / 1 - RT13-60L
SF4233-23 (Auto)	1 - RT8-35R / 1 - RT8-35L & 1 - RT13-60R / 1 - RT13-60L & 1 - RT9-40R / 1 - RT9-40L

17001686RS	SF4233-17	1817	10,798.00
17001689RS	SF4233-19	1785	11,037.00
17001692RS	SF4233-21 (for use with Rigid Shear Bolt)	2330	14,042.00
17001693RS	SF4233-21 (for use with Auto Reset)	2330	14,626.00
17001696RS	SF4233-23 (for use with Rigid Shear Bolt)	2523	15,219.00
17001697RS	SF4233-23 (for use with Auto Reset)	2523	15,944.00

STRIPPER KITS FOR ROLLING TREADERS

12000725BS	SF4233-17	229	1,268.00
12000726BS	SF4233-19	232	1,303.00
12000727BS	SF4233-21	243	1,589.00
12000728BS	SF4233-23	255	1,603.00

4412 SERIES DISC RIPPER
F.O.B. Beloit, KS

STANDARD CONFIGURATION

4 New 12 Ply, 12.5L Tubeless Tires
4 2” Slip-in Spindles with 6 Bolt Hub and 15 x 10 Wheels
2 Walking Beams with Greaseable Tapered Roller Bearings
2 3-1/2” x 16" Lift Cylinders with Hoses and Hardware
1 Single Point Front Mounted Depth Control for Main Depth Control
1 Single Lip Hitch with 2” Pin Hole and Hardened Bushing (7500287RS)
1 Adjustment Wrench
1 Tongue Jack
Hydraulic Disc Blade Adjustment with Travel 5-1/2” to 13-1/2” Above Points
Auto Reset Shank Assemblies (1-1/4” x 4") with 16" Vertical Trip Height and 40" Under Frame Clearance
1" x 2-1/2” x 12" Points (5288S)
Individual Front Blades - 22.33" x 4 Gauge Disc Blades with 12” Front Blade Spacing
Rear Gangs – 22” x 4 Gauge Disc Blades with 10-1/2” Rear Blade Spacing
C-Flex Mounted Disc Blades with 5 Bolt Hub, 1-3/4” Spindle, and Triple Lip Seals (Front Only)
C-Flex Bearing Standards (1” x 2-1/2”) on Individual Front Blades
High Strength 1-3/4” Round Stress Proof Gang Shafts (Gangs Only)
Triple Sealed Greaseable Trunnion Gang Bearings (Gangs Only)
C-Flex Bearing Standards (1-1/4” x 2-1/2”) on Gangs
4" Wide Rigid Scrapers Mounted to C-Flex Bearing Hangers (Gangs Only)
Stroke Control Segments for Front Disc Blade Adjustment
Depth Indicator for Rear Gang
Maintenance Free Lift System with UHMW Sleeves
Self-leveling Hitch
Warning Light Kit, Complete with Wiring
SMV Emblem and Safety Chain

MODEL NUMBER	SF4412-05	SF4412-07
CUTTING WIDTH	12’ 6”	17’ 6”
TRANSPORT WIDTH	15’ 9”	17’ 4”
NUMBER OF SHANKS	5	7
SHANK SPACING	30”	30”
NUMBER OF BLADES	12 / 18	18 / 24
BLADE SPACING	12” / 10 ½”	12” / 10 ½”

These prices reflect the standard configuration. If items other than those listed in the standard configuration are ordered, then the quoted price below will change.

For Quotation Purposes Only – Please Order Items from the Groups on the Next Pages

MODEL NUMBER	CUTTING WIDTH	SHANK SPACING	EST. WT.	LIST PRICE
Individual Front Blades, 22.33” x 4 Ga. and Rear Gangs, 22” x 4 Ga.				
SF4412-05	12’ 6"	30"	13615	49,894.00
SF4412-07	17’ 6"	30"	16200	61,513.00

4412 SERIES DISC RIPPER

ORDER CODE	DESCRIPTION	APPROX. WEIGHT (LBS)	LIST PRICE

Select One Order Code from Each Group, 01 through 08.

Group 01 Base Machine

SF4412-05	44120500, 5 Shank Disc Ripper	4764	22,534.00
SF4412-07	44120700, 7 Shank Disc Ripper	6381	28,523.00

Group 02 Individual Blades

Individual Front Blades - 22.33" x 4 Gauge Disc Blades with 12” Front Blade Spacing

12301563S	Disc Blades for SF4412-05	1550	8,691.00
12301565S	Disc Blades for SF4412-07	1806	10,521.00

Group 03 Rear Gangs

Rear Gangs – 22” x 4 Gauge Disc Blades with 10 ½” Rear Blade Spacing

12301564S	Rear Gangs for SF4412-05	1800	6,221.00
12301566S	Rear Gangs for SF4412-07	2000	6,894.00

Group 04 Shanks

Auto Reset Shank Assemblies (1¼” x 4") with 16" Vertical Trip Height and 40" Under Frame Clearance

7500331RS	Shank Assy for SF4412-05	1425	7,682.00
7500336RS	Shank Assy for SF4412-07	2565	10,749.00

Group 05 Points - 1" x 2½” x 12" Order 1 per Shank

5288S	Plain Ripper Point	10	30.00
12763BS	Ripper Point with 6” Chrome Cap	10	46.00
12765BS	Ripper Point with Dorsal Fin and Chrome Cap	10	69.00
12626BS	Ripper Point with Wing and Chrome Cap	15	129.00

(Note - Points with Chrome Cap, Dorsal Fin and/or Wings Are Not Recommended for Rocky Conditions.)

Group 06 Tires - Order Qty 4

3588S	(1) New 12 Ply, 12.5L x 15 Tubeless Tire, 6 Bolt Wheel	80	367.00

Group 07 Lift Assemblies

Two 3½” x 16" Lift Cylinders with Hoses and Hardware

7500447RS	Lift Assembly	745	2,998.00

Group 08 Hitches

7500430RS	Cast Single Lip Hitch with 2” Pin Hole	29	150.00

4412 SERIES DISC RIPPER

ORDER CODE	DESCRIPTION	APPROX. WEIGHT (LBS)	LIST PRICE

OPTIONAL EQUIPMENT

13734RS	Rear Tow Hitch with Hitch Slide and Ball Joint . . . . . (Cannot be Used with Rear Mounted Finishing Harrow Attachments)	364	1,862.00
2500165RS	Hydraulic Tow Package.	16	394.00
6278BS	Shin Guard for (order 1 per Shank).	11	158.00
18663BS	Gang Wrench, 2-3/4"	20	89.00

3 ROW HEAVY DUTY COIL TINE HARROW

Spring Loaded Parallel Drag Arms with all Required Hardware and Mounting Brackets
Three Rows of 5/8” x 30” Coil Tines on 12” Centers, 4” spacing overall, with Angle Adjustment and Backup Protection
13” Spacing

17001746RS	SF4412-05	1045	5,001.00
17001747RS	SF4412-07	1650	7,353.00

MODEL	SECTION SIZE	ARMS
SF4412-05	8' 8'	4
SF4412-07	6' 8' 6'	6

4511 and 4530 DISC CHISEL
F.O.B. Beloit, KS

STANDARD CONFIGURATION

2 Walking Tandems with Greaseable Tapered Roller Bearings 4511
4 Walking Tandems with Greaseable Tapered Roller Bearings 4530
1 Single Point Front Mounted Depth Control for Main Depth Control
1 Cast Single Lip Hitch with Oblong Hole for 2” Pin (7500430RS)
1 Adjustment Wrench
1 Tongue Jack
Independent Hydraulic Disc Blade Adjustment Front and Rear
1" x 2” x 18" Reversible Points (1400163S)
Individual Front Blades - 22.33" x 4 Gauge Disc Blades 12” Spacing
C-Flex Mounted Disc Blades with Five Bolt Hub, 1-3/4” Spindle, and Triple Lip Seals (Front Only)
C-Flex Bearing Standards (1” X 2-1/2”) on Individual Front Blades
High Strength 1-3/4” Round Stress Proof Gang Shafts on Rear Gangs with Greaseable Trunnion Bearings
C-Flex Bearing Standards (1-1/4” x 2-1/2”) on Rear Gangs
22" x 4 Gauge Disc Blades on Rear Gang with 10-1/2” Spacing and 4” Scrapers Mounted to C-Flex Hangers
2 Piece Shield on Each Individually Front Mounted C-Flex Hanger
Depth Indicator for Front and Rear Gangs
Maintenance Free Lift System with UHMW Sleeves
Self-leveling Hitch
Warning Light Kit, Complete with Wiring, SMV Emblem and Safety Chain

MODEL NUMBER	SF4511-09	SF4511-11	SF4511-13	SF4511-15	SF4530-19
CUTTING WIDTH of SHANKS	11’ 3”	13’ 9”	16’ 3”	18’ 9”	23’ 9”
TRANSPORT WIDTH	13’ 9”	17’ 2”	16’ 9”	18’ 8”	18’ 1”
TRANSPORT HEIGHT	6’ 8”	6’ 8”	8’ 9”	10’ 3”	11’ 7”
NUMBER OF SHANKS	9	11	13	15	19
SHANK SPACING	15”	15”	15”	15”	15”
NUMBER OF BLADES F®	12 / 16	14 / 20	18 / 22	20 / 26	24 / 32
BLADE SPACING F®	12”/10 ½”	12”/10 ½”	12”/10 ½”	12”/10 ½”	12”/10 ½”
TIRES AND SIZE (center)	(4) 12.5Lx15” 12 ply	(4) 12.5Lx15” 12 ply	(4) 12.5Lx15” Load range F	(4) 12.5Lx15” Load range F	(4) 12.5Lx15” Load range F
TIRES AND SIZE (wings)	N/A	N/A	N/A	N/A	(4) 12.5Lx15” 12 ply

4511 and 4530 DISC CHISEL

These prices reflect the standard configuration. If items other than those listed in the standard configuration are ordered, then the quoted price below will change.

For Quotation Purposes Only – Please Order Items from the Groups Below

MODEL NUMBER	CUTTING WIDTH	SHANK SPACING	EST. WT.	LIST PRICE
RIGID SHEAR BOLT SHANKS (1½" x 2" x 30")				
SF4511-09	11' 3“	15”	12,010	47,597.00
SF4511-11	13' 9"	15"	13,015	50,776.00
SF4511-13	16' 3"	15"	15,065	58,295.00
SF4511-15	18' 9”	15"	16,065	61,733.00
SF4530-19	23' 9”	15”	22,000	91,760.00
AUTO RESET SHANKS (1 ¼” x 2 ½” x 30”)				
SF4511-09	11' 3"	15"	13,160	53,726.00
SF4511-11	13' 9"	15"	14,385	58,267.00
SF4511-13	16' 3"	15"	16,680	67,148.00
SF4511-15	18' 9”	15"	17,900	71,948.00
SF4530-19	23' 9”	15”	24,360	104,699.00

Auto Reset Shanks Feature Maximum Point Load Of 1,500 Lbs. And Maximum Vertical Trip Height Of 13". These Shanks Are Recommended In Rock Or Hard Ground Conditions.

ORDER CODE	DESCRIPTION	APPROX. WEIGHT (LBS)	LIST PRICE
Select One Order Code from Each Group, 01 through 06.			
Group 01 Base Machine			
SF4511-09	45110900, 9 Shank Disc Chisel	9500	30,490.00
SF4511-11	45111100, 11 Shank Disc Chisel	10625	30,943.00
SF4511-13	45111300, 13 Shank Disc Chisel	11250	32,485.00
SF4511-15	45111500, 15 Shank Disc Chisel	11950	33,974.00
SF4530-19	45301900, 19 Shank Disc Chisel	17000	54,201.00
Group 02 Front Gangs			
Individual Front Blades - 22.33" x 4 Gauge Disc Blades with 12” Spacing			
12301535S	Disc Blades for SF4511-09		6,841.00
12301537S	Disc Blades for SF4511-11		7,964.00
12301539S	Disc Blades for SF4511-13		9,440.00
12301541S	Disc Blades for SF4511-15		10,555.00
12301543S	Disc Blades for SF4530-19		13,374.00
Group 03 Rear Gangs			
Rear Gangs – 22” x 4 Gauge Disc Blades with 10 ½” Spacing			
12301534S	Rear Gangs for SF4511-09		5,606.00
12301536S	Rear Gangs for SF4511-11		6,533.00
12301538S	Rear Gangs for SF4511-13		9,754.00
12301540S	Rear Gangs for SF4511-15		9,912.00
12301542S	Rear Gangs for SF4530-19		10,326.00

4511 and 4530 DISC CHISEL

ORDER CODE	DESCRIPTION	APPROX. WEIGHT (LBS)	LIST PRICE

Select One Order Code from Each Group, 01 through 08.

Group 04 Shanks Order Quantity Indicated Above from Group 1

9503RS	Shank Assy, Rigid Shear Bolt, 1-1/2" x 2" x 30" on Edge . . .	56	302.00
12574RS	Shank Assy, Auto Reset, 1-1/4" x 2-1/2" x 30" on Edge	155	983.00

Group 05 Points / Shovels

MODEL	ORDER QTY	ORDER QUANTITY (LEFT & RIGHT)	
	POINTS	RIGHT TWISTED	LEFT TWISTED
SF4511-09	9	5	4
SF4511-11	11	6	5
SF4511-13	13	7	6
SF4511-15	15	8	7
SF4530-19	19	10	9

Points

1400163S	1” x 2" x 18" Heavy Duty Reversible Point	9	36.00

Right Twisted

1400005S	1/2" x 3" x 22" One Piece Twisted Shovel	9	46.00

Left Twisted

1400006S	1/2" x 3" x 22" One Piece Twisted Shovel	9	46.00

Group 06 Tires

MODEL	ORDER QUANTITY	
	CENTERS	WINGS
SF4511-09 SF4511-11	(4) 3588S	N / A
SF4511-13 SF4511-15	(4) 5555YS	N / A
SF4530-19	(4) 5555YS	(4) 3588S

SF4511-09, SF4511-11 and SF4530-19 Wings

3588S	(1) New 12 Ply, 12.5L x 15 Tubeless Tire . . . . . 6 Bolt Wheel (15" x 10")	80	367.00

SF4511-13, SF4511-15 and SF4530-19 Center

5555YS	(1) New 12.5L x 15 (GY FI) Load Range F Tubeless Tire . . . 8 Bolt Wheel (15" x 10")	104	518.00

4511 and 4530 DISC CHISEL

ORDER CODE	DESCRIPTION	APPROX. WEIGHT (LBS)	LIST PRICE

Select One Order Code from Each Group, 01 through 08.

Group 07 Hitch

7500430RS	Cast Single Lip Hitch with 2” Pin Hole	29	150.00

Group 08 Lift Assemblies For 4530-19 Only

7500429RS	Lift Assembly for SF4530-19 Only	475	3,747.00

OPTIONAL EQUIPMENT

12799RS	Rear Tow Hitch with Hitch Slide and Ball Joint . . . . . (Cannot be Used with Rear Mounted Finishing Harrow Attachments)	524	2,197.00
2500145RS	Hydraulic Tow Package.		394.00
18663BS	Gang Wrench, 2-3/4"	20	89.00

3 ROW HEAVY DUTY COIL TINE HARROW

Spring Loaded Parallel Drag Arms with all Required Hardware and Mounting Brackets
Three Rows of 5/8” x 30” Coil Tines on 12” Centers, 4” spacing overall, with Angle Adjustment and Backup Protection
13” Spacing

SF4511 SERIES TOOLS

17001748RS	SF4511-09	985	5,001.00
17001749RS	SF4511-11	1135	5,118.00
17001750RS	SF4511-13	1315	7,235.00
17001751RS	SF4511-15	1540	7,617.00
17001752RS	SF4530-19	1715	8,175.00

MODEL	SECTION SIZE	ARMS
SF4511-09	8’ 6’	4
SF4511-11	10’ 8’	4
SF4511-13	6’ 6’ 6’	6
SF4511-15	6’ 10’ 6’	6
SF4530-19	8’ 10’ 8’	6

4610 and 4630 DISC RIPPER

F.O.B. Wahpeton, ND

STANDARD CONFIGURATION

4610

2 Walking Tandems with Greaseable Tapered Roller Bearings
4 (New) 385/65R 22.50 Tires with 8 Bolt Hubs
Depth Collar Kit and Hoses
2 Main Lift Cylinders 4.5" x 12"
2 Disc Lift Cylinders 4" x 8"

4630-09 Folding

2 Walking Tandems with Greaseable Tapered Roller Bearings
4 (New) 385/65R 22.50 Tires with 8 Bolt Hubs
Depth Collar Kit and Hoses
2 Main Lift Cylinders 5" x 12"
2 Disc Lift Cylinders 4" x 8"
4 Fold Cylinders 4" x 36"

4630-11 & 4630-13

4 Walking Tandems with Greaseable Tapered Roller Bearings
8 (New) 385/65R 22.50 Tires with 8 Bolt Hubs
Depth Collar Kit and Hoses
2 Main Lift Cylinders 5" x 12"
2 Wing Lift Cylinders 4.5" x 12"
2 Main Disc Lift Cylinders 4" x 8"
2 Wing Disc Lift Cylinders 3.75" x 8"
4 Fold Cylinders 4" x 36"

All Models

Complete with Hoses, Fittings and Hose Docking Station
1 Cast Single Lip Cat V Hitch for 2-3/4" Diameter Pin
1 Adjustment Wrench
1 Hydraulic Tongue Jack
Independent Hydraulic Disc Blade Adjustment
Spring Reset Parabolic Shanks, 1-1/4" High Strength Abrasion Resistant Steel with Chromium Carbide Shin Guards
Self-leveling Hitch
Warning Light Kit, Complete with Wiring, SMV Emblem and Safety Chain
7" Points

Model Number	SF4610-7	SF4610-9	SF4630-09	SF4630-11	SF4630-13
Cutting Width	14' 0"	18' 0"	18' 0"	22' 0"	26' 0"
Transport Width	14' 5"	19' 7"	15' 9"	19' 3"	19' 3"
Transport Height	7' 0"	7' 0"	11' 10"	13' 6"	14' 6"
Number of Shanks	7	9	9	11	13
Shank Spacing	24"	24"	24"	24"	24"
Number of Blades	20	28	36	36	40
Blade Spacing (Cut)	15" (7.5")	15" (7.5")	15" (7.5")	15" (7.5")	15" (7.5")
Tires and Size (Center)	(4) 385/65R 22.50	(4) 385/65R 22.50	(4) 385/65R 22.50	(4) 385/65R 22.50	(4) 385/65R 22.50
Tires and Size (Wings)	N/A	N/A	N/A	(4) 385/65R 22.50	(4) 385/65R 22.50

4610 and 4630 DISC RIPPER

These prices reflect the standard configuration (either blade option). If items other than those listed in the standard configuration are ordered, then the quoted price below will change.

For Quotation Purposes Only – Please Order Items from the Groups Below

MODEL	DESCRIPTION	NUMBER OF SHANKS	ESTIMATED WEIGHT	LIST PRICE WITH 7" POINTS
SF4610-7	7 Shank (24") Disc Ripper	7	16078	61,715.00
SF4610-9	9 Shank (24") Disc Ripper	9	18779	73,292.00
SF4630-9	9 Shank (24") Disc Ripper	9	21542	86,646.00
SF4630-11	11 Shank (24") Disc Ripper	11	30656	108,973.00
SF4630-13	13 Shank (24") Disc Ripper	13	32011	122,591.00

ORDER CODE	DESCRIPTION	APPROX. WEIGHT (LBS)	LIST PRICE
	Select One Order Code from Each Group, 01 through 03.		
	Group 01 Base Machine		
	Non-Folding Models		
SF4610-7	247215AW, 7 Shank (24") Disc Ripper	17036	56,061.00
SF4610-9	247216AW, 9 Shank (24") Disc Ripper	20118	67,408.00
	Folding Models		
SF4630-9	354673AW, 9 Shank (24") Disc Ripper	21542	75,965.00
SF4630-11	247217AW, 11 Shank (24") Disc Ripper	31255	98,062.00
SF4630-13	247218AW, 13 Shank (24") Disc Ripper	32663	111,450.00
	Non-Folding Models with Saber Blades		
SF4610-7	355901AW, 7 Shank (24") Disc Ripper	17036	56,061.00
SF4610-9	355903AW, 9 Shank (24") Disc Ripper	20118	67,408.00
	Folding Models with Saber Blades		
SF4630-9	355904AW, 9 Shank (24") Disc Ripper	21542	75,965.00
SF4630-11	355905AW, 11 Shank (24") Disc Ripper	31255	98,062.00
SF4630-13	355906AW, 13 Shank (24") Disc Ripper	32663	111,450.00
	Group 02 Points - Order 1 per Shank		
357171AW	7" Wide Cast Wing Point	21	220.00
221353AW	3" Wide Ductile Iron Straight Point with 10" Wide Wings	23	122.00
233409AW	3" Wide Ductile Iron Straight Point	20	84.00
	Group 03 Tires		
350282AW	4-385/65R22.50 (Used) for 4610 & 4630-09	1025	2,371.00
354068AW	4-385/65R22.50 (NEW) for 4610 & 4630-09	1112	4,849.00
350286AW	8-385/65R22.50 (used) for 4630-11 & 4630-13	2050	4,687.00
354072AW	8-385/65R22.50 (NEW) for 4630-11 & 4630-13	2224	9,646.00
	Optional Equipment		
351446AW	Rear Tow Hitch (Straight Tongue 1" Pin)	1011	2,227.00
238407AW	Hydraulic Extension Package	53	416.00
236099AW	Safety Light Extension Package	3	211.00

4610 and 4630 DISC RIPPER ATTACHMENTS

ORDER CODE	DESCRIPTION	APPROX. WEIGHT (LBS)	LIST PRICE

OPTIONAL EQUIPMENT

3 & 4 Bar Heavy Duty Coil Tine Harrow (5/8" x 30" Tines)

Model	Overlap (Each Side)	Section Size
SF4610-7	12"	8' 8'
SF4610-9	12"	6' 8' 6'
SF4630-9	12"	6' 4' 4' 6'
SF4630-11	12"	6' 6' 6' 6'
SF4630-13	12"	6' 8' 8' 6'

3 Bar HD Coil Tine Harrow

247951AW	SF4610-7	1113	3,968.00
247952AW	SF4610-9	1583	5,724.00
354680AW	SF4630-9 (Folding)	2090	7,750.00
247953AW	SF4630-11	2003	7,365.00
247954AW	SF4630-13	2805	7,861.00

4 Bar HD Coil Tine Harrow

351116AW	SF4610-7	1364	4,701.00
350658AW	SF4610-9	1916	6,625.00
354681AW	SF4630-9 (Folding)	2397	9,283.00
351117AW	SF4630-11	2608	8,820.00
351118AW	SF4630-13	2639	9,149.00

2-Bar Heavy Duty Coil Tine Harrow (5/8" x 26" Tines) with 13" diameter Flat Bar Basket

Model	Overlap (Each Side)	Section Size
SF4610-7	12"	8' 8'
SF4610-9	12"	6' 8' 6'
SF4630-9	12"	6' 8' 6'
SF4630-11	12"	6' 6' 6' 6'
SF4630-13	12"	6' 8' 8' 6'

247955AW	SF4610-7	1483	6,131.00
247956AW	SF4610-9	2115	8,801.00
354682AW	SF4630-9 (Folding)	2737	11,610.00
247957AW	SF4630-11	2874	11,366.00
247259AW	SF4630-13	2895	12,041.00

4610 and 4630 DISC RIPPER ATTACHMENTS

ORDER CODE	DESCRIPTION	CODE	APPROX. WEIGHT (LBS)	LIST PRICE

OPTIONAL EQUIPMENT

2-Bar Coil Tine Harrow with Hydraulic HD Flat Bar Reel

Model	Overlap (Each Side)	Section Size	Arms
SF4610-7	12"	8' 8'	3
SF4610-9	12"	6' 8' 6'	5
SF4630-9	12"	4' 6' 6' 4'	7
SF4630-11	12"	6' 6' 8' 6'	7
SF4630-13	12"	6' 8' 8' 6'	7

355238AW	SF4610-7		3200	11,610.00
355237AW	SF4610-9		3900	13,230.00
355242AW	SF4630-9 (Folding)		4700	18,900.00
355236AW	SF4630-11		5250	18,792.00
355232AW	SF4630-13		5400	19,116.00

5-Bar Spike Tooth Harrow (3/4" x 11" Spikes)

Model	Overlap (Each Side)	Section Size	Arms
SF4610-7	6"	7' 6" 7' 6"	4
SF4610-9	7"	5' 10" 7' 6" 5' 10"	5
SF4630-9	12"	5' 10" 4' 2" 4' 2" 5' 10"	7
SF4630-11	16"	5' 10" 6' 8" 6' 8" 5' 10"	8
SF4630-13	14"	6' 8" 7' 6" 7' 6" 6' 8"	8

351182AW	SF4610-7		1265	4,132.00
351183AW	SF4610-9		1850	5,477.00
354683AW	SF4630-9 (Folding)		1637	7,123.00
351184AW	SF4630-11		2424	7,561.00
351185AW	SF4630-13		2567	8,213.00

4700 SERIES IN LINE RIPPER

F.O.B. Wahpeton, ND

4" x 6" x 3/8" 2-Bar Frame, Rigid, Flat-fold or Over Center Fold
3-Point Hitch 3, 4, 5, 6, 7 and 8 Row Models (Optional Pull-type Conversion) Pull-type - 12 Row Model
30" Shank Spacing
35" Under Frame Clearance
16" Maximum Shank Working Depth
Parabolic or Minimal Disturbance Shank
Rigid or Spring Reset Shank Holders
Parabolic Shanks: 1-1/4" x 3" Abrasion Resistant Steel
Minimal Disturbance Shanks: 1-1/4" x 4" Abrasion Resistance Steel
Transport Warning Lights
(2) Parking Stands
20" Rippled Coulter Blades (Optional)
Shank Staggering Brackets (Optional)
(2) 20.5 x 10; 10 Ply Gauge Wheels and Tires (Optional 3-Point Models)
(6) 11L x 15, 12 Ply Tires with 6 Bolt Wheels (12 Row)
(2) 4" x 24" Wing Fold Cylinders with Hoses (8 Row)
(2) 5" x 24" Wing Fold Cylinders with Hoses (12 Row)
(6) 12" Hydraulic Lift Cylinders (12 Row)

Pull-Hitch (Optional)
(1) Cast Single Lip Hitch for 2" Diameter Pin
Safety Chain
Fore and Aft Adjustment Turnbuckle
(2) 4" x 12" Hydraulic Lift Cylinders with Hoses
(2) 11L x 15, 12 Ply Tires with 6 Bolt Wheels

Model Number	SF4710-4	SF4710-5	SF4710-6	SF4710-7	SF4710-8 (Rigid)	SF4730-8 (FF)	SF4730-12
Cutting Width	10'	12' 5"	15	17' 5"	20' 0"	20' 0"	30' 0"
Transport Width	10' 10"	10' 10"	14' 4"	16' 2"	20' 2"	12' 0"	16' 5"
Transport Height	N/A	N/A	N/A	N/A	N/A	14' 6"	14' 6"
Number of Shanks	4	5	6	7	8	8	12
Shank Spacing	30"	30"	30"	30"	30"	30"	30"
Number of Coulters	4	5	6	7	8	8	12
Coulter Spacing	30"	30"	30"	30"	30"	30"	30"
Tires and Size (Center)	N/A	N/A	N/A	N/A	N/A	N/A	(4) 11L x 15, 12 Ply
Tires and Size (Wings)	N/A	N/A	N/A	N/A	N/A	N/A	(2) 11L x 15, 12 Ply

4700 SERIES IN LINE RIPPER

ORDER CODE		DESCRIPTION	APPROX. WEIGHT (LBS)	LIST PRICE

Select One Order Code from Each Group, 01 through 05

Group 01 Base Machine

Non-Folding 3-Point Models

SF4710-4	235593AW	4 Shank (30") In Line Ripper	1190	3,987.00
SF4710-5	235592AW	3-5 Shank (30") In Line Ripper. (Includes 1' 9" Extensions - Pair)	1232	4,140.00
SF4710-5	352411AW	5 Shank (30") In Line Ripper	1190	3,987.00
SF4710-6	235596AW	4-6 Shank (30") In Line Ripper. (Includes 1' 9" Extensions - Pair)	1529	4,695.00
SF4710-7	235594AW	5-7 Shank (30") In Line Ripper. (Includes 2' 8" Extensions - Pair)	1875	5,043.00
SF4710-8	235598AW	8 Shank (30") In Line Ripper	1840	5,309.00

Folding 3-Point Models

SF4730-8	236548AW	8 Shank (30") In Line Ripper	2607	10,894.00

Pull Type Models (with Pull Type Hitch, (6) Hydraulic Gauge Wheels, Hydraulic Fold Cylinders with Hoses)

SF4730-12	235993AW	12 Shank (30") In Line Ripper	6909	27,802.00

Note: 3-Point Models Require Gauge Wheels. Gauge Wheels are Optional on Pull Type.

Group 02 Shank Holder - Order 1 per Shank

235584AW	Rigid Shank Holder	91	416.00
355444AW	Greaseless Spring Reset Shank Holder	287	1,635.00

Group 03 Shank Selection - Order 1 per Shank Holder

233739AW	Minimal Disturbance Shank.	59	283.00
240024AW	Parabolic Shank	45	212.00
355422AW	3/4" Wide Minimal Disturbance Shank	45	170.00

Group 04 Ripper Point Selection - Order 1 per Shank

237333AW	Point 7" Wing Cast and Guard with Hardware	21	155.00
237334AW	Point 2" Straight Cast and Guard with Hardware	17	100.00
234196AW	Point 2" Straight Cast and Guard (Fits Minimal Disturbance Shank Only)	24	162.00
237332AW	Point 7" Wing Cast and Guard (Fits Minimal Disturbance Shank Only)	29	218.00
355445AW	Spacer Plates, (Point and Hardware). (Fits 3/4" Minimal Disturbance Shank)	29	162.00

Group 05 Parking Stand - (Two Required for 3-Point Units)

59165AW	Parking Stand with Hardware	37	115.00

4700 SERIES IN LINE RIPPER

ORDER CODE	DESCRIPTION	APPROX. WEIGHT (LBS)	LIST PRICE

OPTIONAL EQUIPMENT

Coulter Attachment, 20" Rippled Coulter with Compression Spring (In Sets - Order 1 Set per Unit)

234222AW	20" Rippled Coulter (Set of 3)	237	1,620.00
234223AW	20" Rippled Coulter (Set of 4)	315	2,160.00
234224AW	20" Rippled Coulter (Set of 5)	394	2,728.00
234225AW	20" Rippled Coulter (Set of 6)	472	3,240.00
234226AW	20" Rippled Coulter (Set of 7)	550	3,819.00
234227AW	20" Rippled Coulter (Set of 8)	629	4,364.00
234229AW	20" Rippled Coulter (Set of 12)	943	6,546.00

Disc Leveler Attachment - Order One Per Shank (Fits Parabolic Shank Only)

223232AW	Disc Leveler	223	918.00

Row Sealer "Slot Tillage" (For Spring Reset Shank Only)

240762AW	Row Sealer, Wave Coulter (Order One Per Shank)	330	978.00

Reel Buster "Slot Tillage" (Requires Row Sealer Above)

234049AW	Reel Buster 14-1/4" D x 14-1/16" W (Order one Per Row)	100	427.00

Pull Type Hitch (Converts 3-Point Units to Pull Type)

351468AW	Pull Type Hitch with Hinged Tongue, Cast Hitch for 2" Pin. (2) 11L x 15" 12-Ply Tires, Safety Chain (2) 4" x 12" Hydraulic Cylinders with Hoses and Fittings (In Base on SF4730-12)	1836	7,307.00

Shank Staggering Bracket (Extends the Shank Rearward)

62324AW	12" Shank Staggering Bracket with Attaching Hardware	68	289.00

Furrower Attachment (For Parabolic Shank Only)

60920AW	7" Furrower with Hardware (Requires 60789AW Bracket)	6	20.00
60789AW	Attaching Bracket and Hardware for 7" Furrower	5	30.00

Gauge Wheel (Required with 3-Point Units - Not Required with Pull Hitch)

351467AW	Pair of Gauge Wheels with 20.5 x 10, 10-Ply Rated (Includes Hardware)	194	1,140.00
355448AW	Pair of HD Gauge Wheels with 11L x 15, 8-Ply Rated (Includes Hardware)	203	3,087.00

FACTORY OR DEALERSHIP ASSEMBLY AMOUNTS ON 5000 SERIES
(DISCOUNTS DO NOT APPLY)

The factory or dealership set-up amounts will be charged for machines set-up by Sunflower. Set-up amounts are the same whether machines are shipped via our truck (gangs off wings, etc.) or set-up completely and picked up by dealer's truck. Factory assembly charge includes hydraulic hose, hydraulic oil, and tips (hydraulic system is charged). Dealer location assembly charge includes hydraulic hose, and tips. (Hydraulic oil is not included) See note below.

MODEL NUMBER	FACTORY ORDER CODE	FACTORY SET-UP RATE	DEALER LOCATION ORDER CODE	DEALER LOCATION SET-UP RATE
SF5035-18 ♦	SET0126S	**1,071.00**	SET0126DS	**1,122.00**
SF5035-20 ♦	SET0127S	**1,129.00**	SET0127DS	**1,183.00**
SF5035-22 ♦	SET0128S	**1,204.00**	SET0128DS	**1,262.00**
SF5035-24 ♦	SET0129S	**1,252.00**	SET0129DS	**1,311.00**
SF5035-26 ♦	SET0130S	**1,307.00**	SET0130DS	**1,370.00**
SF5035-28 ♦	SET0131S	**1,356.00**	SET0131DS	**1,420.00**
SF5035-30 ♦	SET0132S	**1,458.00**	SET0132DS	**1,528.00**
SF5035-32 ♦	SET0133S	**1,516.00**	SET0133DS	**1,588.00**
SF5035-34 ♦	SET0134S	**1,565.00**	SET0134DS	**1,639.00**
SF5035-36 ♦	SET0135S	**1,620.00**	SET0135DS	**1,697.00**
SF5135-36	SET0136S	**1,867.00**	SET0136DS	**1,956.00**
SF5135-38	SET0137S	**1,926.00**	SET0137DS	**2,017.00**
SF5135-40	SET0138S	**2,028.00**	SET0138DS	**2,124.00**
SF5135-42	SET0139S	**2,076.00**	SET0139DS	**2,175.00**
SF5056-45 ♦	SET0140S	**2,398.00**	SET0140DS	**2,512.00**
SF5056-49 ♦	SET0141S	**2,559.00**	SET0141DS	**2,681.00**
SF5056-55 ♦	SET0143S	**2,872.00**	SET0143DS	**3,009.00**
SF5056-59 ♦	SET0144S	**3,024.00**	SET0144DS	**3,168.00**
SF5056-63♦	SET0145S	**3,185.00**	SET0145DS	**3,336.00**
Coil Tine Harrow	SET0146S	**22.00 per foot**	SET0146DS	**23.00 per foot**
Spike Drag	SET0147S	**19.00 per foot**	SET0147DS	**20.00 per foot**
Three Row Tine and Reel	SET0148S	**24.00 per foot**	SET0148DS	**25.00 per foot**
Three Row Spike and Reel	SET0149S	**21.00 per foot**	SET0149DS	**22.00 per foot**

Sunflower Recommends These Set-Up Figures Be Used By Dealers When Transferring Equipment

♦ ***Frames are over-width and will require special handling and/or permits.***

Dealership Assembly requirements:

1. The dealership assembly service must be ordered separately from the implement. (initiates scheduling of service) Please order dealership assembly service from the field installed options tab in e-ordering.
2. Include in the dealership assembly order request the order and/or invoice number of the implement to be assembled.
3. Dealer supplies hydraulic oil (oil is not included).
4. Dealer supplies a fork lift of sufficient size to be used by AGCO's assembly crew.

5035 and 5135 SERIES THREE SECTION FIELD CULTIVATORS
F.O.B. Beloit, KS

STANDARD CONFIGURATION

8 New 8 Ply, 11L x 15 Tires on 15” x 8” Six Bolt Wheels and Hubs with 2” Slip-in Spindles (18’-28’)
4 New 12 Ply, 11L x 15 Tires on Six Bolt Wheels and Hubs with 2” Slip-in Spindles on Center (30’-36’)
4 New 11L x 15 GY - FI Tires (Load F) with Eight Bolt Wheels and Hubs with 2-1/4” Slip-in Spindles on Center of All 5135’s
4 New 8 Ply, 11L x 15 Tires on 15" x 8" Six Bolt Wheels and Hubs with 2” Slip-in Spindles on Wings (30’-36’)
4 New 8 Ply, 11L x 15 Tires on 15" x 10" Six Bolt Wheels and Hubs with 2” Slip-in Spindles on Wings (5135’s)
4 Walking Beams with Greaseable Tapered Roller Bearings (18’ to 42’)
2 Front Mounted Adjustable Non-swivel Gauge Wheels on 26’ through 42’ (7500348RS)
1 Single Point Front Mounted Depth Control
1 Double Lip Hitch with 1-1/4" Hole, on 18’ through 24’ (7500017S)
1 Single Lip Hitch with 1-7/8” Hole, on 26’ through 28’ (7500016S)
1 Cast Single Lip Hitch with 2" Oblong Pin Hole, 30’ through 42’
1 Tongue Jack
Self-leveling Tongue
Spring Tension Shank Assemblies (190 lb. Point Load) or 2 Piece S-tine Shank Assemblies (160 lb. Point Load)
Shanks are on 6” Spacing with 9” Plain Sweeps (47º) and have 24” Vertical Clearance
Safety Equipment Including: Light Kit, SMV Emblem, and Safety Chain

MODEL NO.	TRANSPORT WIDTH	TRANSPORT. HEIGHT
SF5035-18	14’	8’ 5”
SF5035-20	14’	9’ 4”
SF5035-22	13’	10’ 4”
SF5035-24	13’	11’ 3”
SF5035-26	13’	12’ 1”
SF5035-28	13’	13’ 2”
SF5035-30	17’	12’ 1”
SF5035-32	17’	13’ 2”
SF5035-34	17’	14’ 2”
SF5035-36	17’	15’ 1”
SF5135-36 ♦	15’ 9”	13’ 6”
SF5135-38 ♦	15’ 9”	13’ 6”
SF5135-40 ♦	17’ 9”	13’ 6”
SF5135-42 ♦	17’ 9”	13’ 6”

◆ ***Note: Model 5135 is a Split Wing Design, Which Reduces Transport Height and Width. In the Field, It is a True Three-Section w/ the Lift Wheels Located Near the Outside for Good Depth Control. It Will Require 2500 PSI to Operate the Fold Cylinders.***

5035 and 5135 SERIES THREE SECTION FIELD CULTIVATORS

These prices reflect the standard configuration. If items other than those listed in the standard configuration are ordered, then the quoted price below will change.

For Quotation Purposes Only – Please Order Items from the Groups on the Next Pages

MODEL NUMBER	CUTTING WIDTH	FRAME SIZE	NO. OF SHANKS	SHANK SPACING	EST. WT.	LIST PRICE
SPRING TENSION SHANKS ON 6" SPACING						
SF5035-18	18' 6"	4' - 10' 6"- 4'	37	6"	6000	28,689.00
SF5035-20	20' 6"	5' - 10' 6"- 5'	41	6"	6350	30,349.00
SF5035-22	22' 6"	6' - 10' 6"- 6'	45	6"	7100	31,459.00
SF5035-24	24' 6"	7' - 10' 6"- 7'	49	6"	7450	32,397.00
SF5035-26	26' 6"	8' - 10' 6"- 8'	53	6"	7900	34,878.00
SF5035-28	28' 6"	9' - 10' 6"- 9'	57	6"	8250	35,895.00
SF5035-30	30' 6"	8' - 14' 6"- 8'	61	6"	9300	39,597.00
SF5035-32	32' 6"	9' - 14' 6"- 9'	65	6"	9650	40,566.00
SF5035-34	34' 6"	10' - 14' 6"- 10'	69	6"	10100	43,029.00
SF5035-36	36' 6"	11' - 14' 6"- 11'	73	6"	10450	44,159.00
SF5135-36SW	36' 6"	11' 6"- 12'- 11' 6"	73	6"	10800	51,457.00
SF5135-38SW	38' 6"	12' 6"- 12'- 12' 6"	77	6"	11150	54,350.00
SF5135-40SW	40' 6"	12' 6"- 14'- 12' 6"	81	6"	11500	55,630.00
SF5135-42SW	42' 6"	13' 6"- 14'- 13' 6"	85	6"	11950	57,540.00
2 PIECE S-TINE SHANKS ON 6" SPACING						
SF5035-18	18' 6"	4' - 10' 6"- 4'	37	6"	5815	27,431.00
SF5035-20	20' 6"	5' - 10' 6"- 5'	41	6"	6145	28,955.00
SF5035-22	22' 6"	6' - 10' 6"- 6'	45	6"	6875	29,929.00
SF5035-24	24' 6"	7' - 10' 6"- 7'	49	6"	7205	30,731.00
SF5035-26	26' 6"	8' - 10' 6"- 8'	53	6"	7635	33,073.00
SF5035-28	28' 6"	9' - 10' 6"- 9'	57	6"	7965	33,954.00
SF5035-30	30' 6"	8' - 14' 6"- 8'	61	6"	8995	37,523.00
SF5035-32	32' 6"	9' - 14' 6"- 9'	65	6"	9325	38,356.00
SF5035-34	34' 6"	10' - 14' 6"- 10'	69	6"	9755	40,683.00
SF5035-36	36' 6"	11' - 14' 6"- 11'	73	6"	10085	41,677.00
SF5135-36SW	36' 6"	11' 6"- 12' - 11' 6"	73	6"	10435	48,975.00
SF5135-38SW	38' 6"	12' 6"- 12' - 12' 6"	77	6"	10765	51,732.00
SF5135-40SW	40' 6"	12' 6"- 14' - 12' 6"	81	6"	11095	52,876.00
SF5135-42SW	42' 6"	13' 6"- 14' - 13' 6"	85	6"	11525	54,650.00

5035 and 5135 SERIES THREE SECTION FIELD CULTIVATORS

ORDER CODE	DESCRIPTION	APPROX. WEIGHT (LBS)	LIST PRICE
	Select One Order Code from Each Group, 01 through 07.		
	Group 01 Base Machine		
SF5035-18	50351800, 37 Shank Field Cultivator, 18'	3800	18,643.00
SF5035-20	50352000, 41 Shank Field Cultivator, 20'	3990	19,655.00
SF5035-22	50352200, 45 Shank Field Cultivator, 22'	4580	20,117.00
SF5035-24	50352400, 49 Shank Field Cultivator, 24'	4770	20,407.00
SF5035-26	50352600, 53 Shank Field Cultivator, 26'	3952	21,205.00
SF5035-28	50352800, 57 Shank Field Cultivator, 28'	4478	21,574.00
SF5035-30	50353000, 61 Shank Field Cultivator, 30'	5996	24,483.00
SF5035-32	50353200, 65 Shank Field Cultivator, 32'	6186	24,804.00
SF5035-34	50353400, 69 Shank Field Cultivator, 34'	6476	26,619.00
SF5035-36	50353600, 73 Shank Field Cultivator, 36'	6666	27,101.00
SF5135-36SW	51353600, Split Wing, 73 Shank Field Cultivator, 36'	6952	33,755.00
SF5135-38SW	51353800, Split Wing, 77 Shank Field Cultivator, 38'	7142	36,000.00
SF5135-40SW	51354000, Split Wing, 81 Shank Field Cultivator, 40'	7332	36,632.00
SF5135-42SW	51354200, Split Wing, 85 Shank Field Cultivator, 42'	7622	37,894.00
	Group 02 Shanks Order Quantity Indicated Above (5/8" x 1¾" Shank, 24" Vertical Clearance)		
18749BS	Spring Tension Shank Assembly (190 lb Point Load)	37	149.00
12375BS	2 Piece S-Tine Shank Assembly (160 lb Initial Point Load)	25	115.00
	Group 03 Sweeps Order 1 per Shank		
1400161S	9" Plain Sweeps (47º)	4	13.00

5035 and 5135 SERIES THREE SECTION FIELD CULTIVATORS

ORDER CODE	DESCRIPTION	APPROX. WEIGHT (LBS)	LIST PRICE

Select One Order Code from Each Group, 01 through 07.

Group 04 Tires

MODEL SIZE	ORDER QUANTITY	
	CENTERS	WINGS
18' through 28'	(4) 6191YS or 6190YS	(4) 6191YS or 6190YS
30' through 36'	(4) 6190YS	(4) 6191YS or 6190YS
SF5135 36' through 42'	(4) 5552YS	(4) 3058YS or 3587YS or 5552YS if HD Wing Lift is ordered (7500395RS)

All Wheels Are 15" x 8"

6191YS	(1) New 8 Ply, 11L x 15 Tubeless Tire, 6 Bolt Wheel.	63	265.00
6190YS	(1) New 12 Ply, 11L x 15 Tubeless Tire, 6 Bolt Wheel	69	342.00

All Wheels Are 15" x 10"

3058YS	(1) New 8 Ply, 11L Tubeless Tire, 6 Bolt Wheel	65	319.00
3587YS	(1) New 12 Ply, 11L Tubeless Tire, 6 Bolt Wheel	74	350.00
5552YS	(1) New 11L x 15 (GY - FI) Load Range F Tubeless Tire . . . 8 Bolt Wheel (15" x 10") **Required** if Ordering 7500395RS from Group 5 Below	85	449.00

Group 05 Lift Assemblies

7500394RS	Walking Tandems 2" Spindle for 5035, 5135 Wing.	192	1,772.00
7500395RS	Heavy Duty Walking Tandems 2-1/4" Spindle for 5135 Wings. (To Match Center Section) **Requires** 5552YS from Group 4 Above	198	2,334.00

Group 06 Gauge Wheels – Optional 18' – 24' / Required 26' – 42'

7500348RS	Two Front Mounted Adjustable Rigid Gauge Wheels	136	1,032.00
7500393RS	Two Front Mounted Adjustable Swivel Gauge Wheels.	463	2,069.00

Rigid Gauge Wheels Used in Standard Configuration Price

5035 and 5135 SERIES THREE SECTION FIELD CULTIVATORS

ORDER CODE	DESCRIPTION	APPROX. WEIGHT (LBS)	LIST PRICE

Select One Order Code from Each Group, 01 through 07.

Group 07 Hitches for 18’ through 28’ Only

18’ through 24’

7500017S	Double Lip Hitch with 1-1/4” Pin Hole	20	160.00
7500015S	Double Lip Hitch with 1-13/16” Pin Hole	20	163.00
7500018S	Single Lip Hitch with 1-1/4" Pin Hole	20	160.00
7500016S	Single Lip Hitch with 1-7/8" Pin Hole	20	163.00

26’ through 28’

7500016S	Single Lip Hitch with 1-7/8" Pin Hole	20	163.00
7500083S	Single Lip Hitch with 2-1/4” Pin Hole	20	163.00
7500015S	Double Lip Hitch with 1-13/16” Pin Hole	20	163.00

OPTIONAL EQUIPMENT

12603RS	Rear Tow Hitch with Hitch Slide and Ball Joint (not available with 3 Row Coil Tine & Reel and 3 Row Spike & Reel)	415	1,961.00
53081RS	Wiring Harness to Plug Soil Conditioner Lights into Implement Lights		170.00

Hydraulic Tow Package – Hoses to Accommodate 7200 Series Soil Conditioner

2500141RS	SF5035-18’ through 28’	25	406.00
2500142RS	SF5035-30’ through 36’	25	406.00
2500140RS	SF5135-36’ through 42’	25	406.00

5035 and 5135 SERIES THREE SECTION FIELD CULTIVATORS

THREE ROW COIL TINE FINISHING HARROWS FOR SF5035 and SF5135

Spring Loaded Drag Arms with all Required Hardware and Mounting Brackets
Three Rows of 3/8" x 16" Coil Tines on 7½" Centers, 2½" Spacing Overall, with Angle Adjustment and Backup Protection

ORDER CODE	ADAPTS TO	LEFT WING	CENTER SECTION	RIGHT WING	EST. WEIGHT	LIST PRICE
17001314RS	5035-18	52 ½"	52 ½" & 52 ½"	52 ½"	855	4,111.00
17001316RS	5035-20	67 ½"	97 ½"	67 ½"	933	4,267.00
17001317RS	5035-22	82 ½"	97 ½"	82 ½"	837	4,229.00
17001319RS	5035-24	97 ½"	97 ½"	97 ½"	886	4,406.00
17001320RS	5035-26	97 ½"	52 ½" & 52 ½"	97 ½"	1018	4,540.00
17001322RS	5035-28	52 ½" & 52 ½"	52 ½" & 52 ½"	52 ½" & 52 ½"	1282	4,802.00
17001327RS	5035-30	97 ½"	82 ½" & 67 ½"	97 ½"	1040	5,207.00
17001329RS	5035-32	52 ½" & 52 ½"	67 ½" & 82 ½"	52 ½" & 52 ½"	1289	5,474.00
17001331RS	5035-34	52 ½" & 67 ½"	52 ½" & 82 ½"	67 ½" & 52 ½"	1340	6,433.00
17001333RS	5035-36	67 ½" & 67 ½"	52 ½" & 82 ½"	67 ½" & 67 ½"	1365	6,592.00
17001559RS	5135-36	52 ½" & 82 ½"	82 ½" & 52 ½"	82 ½" & 52 ½"	1425	7,293.00
17001562RS	5135-38	67 ½" & 82 ½"	82 ½" & 52 ½"	82 ½" & 67 ½"	1482	7,472.00
17001565RS	5135-40	82 ½" & 67 ½"	97 ½" & 67 ½"	67 ½" & 82 ½"	1495	8,563.00
17001556RS	5135-42	82 ½" & 82 ½"	82 ½" & 67 ½"	82 ½" & 82 ½"	1530	8,631.00

THREE ROW COIL TINE AND FINISHING REEL FOR SF5035 and SF5135

Spring Loaded Drag Arms with all Required Hardware and Mounting Brackets
Three Rows of 3/8" x 16" Coil Tines on 7½" Centers, 2½" Spacing Overall, with Angle Adjustment and Backup Protection
11" Diameter Reels with Five Spiral Blades and Two 1-3/4" Greaseable Bearings on Each Reel

ORDER CODE	ADAPTS TO	LEFT WING	CENTER SECTION	RIGHT WING	EST. WEIGHT	LIST PRICE
17000789RS	5035-18	52 ½"	52 ½" & 52 ½"	52 ½"	1878	10,967.00
17000790RS	5035-20	67 ½"	97 ½"	67 ½"	1896	10,994.00
17000792RS	5035-22	82 ½"	97 ½"	82 ½"	1977	11,301.00
17000794RS	5035-24	97 ½"	97 ½"	97 ½"	2141	12,340.00
17000795RS	5035-26	97 ½"	52 ½" & 52 ½"	97 ½"	2195	12,560.00
17000797RS	5035-28	52 ½" & 52 ½"	52 ½" & 52 ½"	52 ½" & 52 ½"	2310	13,000.00
17000993RS	5035-30	97 ½"	67 ½" & 82 ½"	97 ½"	2430	14,221.00
17000995RS	5035-32	52 ½" & 52 ½"	67 ½" & 82 ½"	52 ½" & 52 ½"	2695	15,518.00
17000996RS	5035-34	52 ½" & 67 ½"	82 ½" & 52 ½"	67 ½" & 52 ½"	2985	17,084.00
17000998RS	5035-36	67 ½" & 67 ½"	82 ½" & 52 ½"	67 ½" & 67 ½"	3080	17,399.00
17001769RS	5135-36SW	52 ½" & 82 ½"	82 ½" & 52 ½"	82 ½" & 52 ½"	3575	18,131.00
17001761RS	5135-38SW	57 ½" & 82 ½"	82 ½" & 52 ½"	82 ½" & 67 ½"	3625	18,463.00
17001770RS	5135-40SW	82 ½" & 67 ½"	97 ½" & 67 ½"	67 ½" & 28 ½"	3675	19,101.00
17001719RS	5135-42SW	82 ½" & 82 ½"	82 ½" & 67 ½"	82 ½" & 82 ½"	3725	19,794.00

NOTE: Rear Tow Hitches are not Available with 3 Row Coil Tine and Reel.

5035 and 5135 SERIES THREE SECTION FIELD CULTIVATORS

FOUR ROW HIGH RESIDUE SPIKE DRAG FOR SF5035 and SF5135

Four Rows of 3/4” x 15" Round Teeth on 3" Overall Spacing, 12" Spacing on Each Row, and All Required Hardware

ORDER CODE	ADAPTS TO	LEFT WING	CENTER SECTION	RIGHT WING	EST. WEIGHT	LIST PRICE
17001526RS	5035-18	6’	9’	6’	1093	4,750.00
17001544RS	5035-20	7’	9’	7’	1143	4,774.00
17001527RS	5035-22	8’	9’	8’	1193	4,945.00
17001528RS	5035-24	9’	9’	9’	1253	5,108.00
17001529RS	5035-26	10’	9’	10’	1293	5,274.00
17001568RS	5035-28	11’	9’	11’	1318	5,446.00
17001569RS	5035-30	9’	15’	9’	1392	6,050.00
17001570RS	5035-32	10’	15’	10’	1442	6,217.00
17001571RS	5035-34	11’	15’	11’	1503	6,367.00
17001572RS	5035-36	12’	15’	12’	1560	6,549.00
17001560RS	5135-36	6’ & 7’	13’	7’ & 6’	1970	7,919.00
17001563RS	5135-38	7’ & 7’	13’	7’ & 7’	1995	8,070.00
17001566RS	5135-40	7’ & 7’	15’	7’ & 7’	2055	8,655.00
17001554RS	5135-42	8’ & 7’	15’	7’ & 8’	2120	8,835.00

FIVE ROW SPIKE DRAG FOR SF5035 and SF5135

Five Rows of 3/4" x 11" Square Spikes on 9" Centers, 1-3/4" Spacing Overall, and All Required Hardware

ORDER CODE	ADAPTS TO	LEFT WING	CENTER SECTION	RIGHT WING	EST. WEIGHT	LIST PRICE
17000817RS	5035-18	5’	8 ¾’	5’	1121	4,845.00
17000819RS	5035-20	5’	10 ¼’	5’	1176	4,911.00
17000821RS	5035-22	6 ½’	9 ½’	6 ½’	1265	5,026.00
17000823RS	5035-24	8’	8 ¾’	8’	1342	5,013.00
17000825RS	5035-26	8 ¾’	9 ½’	8 ¾’	1418	5,390.00
17000827RS	5035-28	9 ½’	9 ½’	9 ½’	1485	5,515.00
17000987RS	5035-30	9 ½’	11 ¾’	9 ½’	1628	6,188.00
17000988RS	5035-32	10 ¼’	12 ½’	10 ¼’	1704	6,496.00
17001132RS	5035-34	11’	12 ½’	11’	1923	7,302.00
17000566RS	5035-36	12 ½’	12 ½’	12 ½’	2051	7,528.00
17001561RS	5135-36	5’ & 7 ¼’	6 ½’ & 5’	7 ¼’ & 5’	2340	8,786.00
17001564RS	5135-38	6 ½’ & 7 ¼’	6 ½’ & 5’	7 ¼’ & 6 ½’	2370	9,660.00
17001567RS	5135-40	6 ½’ & 6 ½’	8’ & 6 ½’	6 ½’ & 6 ½’	2521	9,857.00
17001555RS	5135-42	7 ¼’ & 6 ½’	8’ & 6 ½’	6 ½’ & 7 ¼’	2605	9,976.00

5035 and 5135 SERIES THREE SECTION FIELD CULTIVATORS

FIVE ROW SPIKE DRAG (SPLIT SECTION) FOR SF5035

This Attachment Utilizes Smaller Sections and Will Not be as Aggressive as Spike Drags with Larger Sections
Five Rows of 3/4" x 11" Square Spikes on 9" Centers, 1-3/4" Spacing Overall
All Required Hardware and Mounting Brackets

ORDER CODE	ADAPTS TO	LEFT WING	CENTER SECTION	RIGHT WING	EST. WEIGHT	LIST PRICE
17001573RS	5035-30	9 ½'	6 ½' & 5 ½'	9 ½'	1756	6,546.00
17001574RS	5035-32	10 ¼'	6 ½' & 5 ½'	10 ¼'	1862	6,809.00
17001575RS	5035-34	10 ¼'	7 ¼' & 6 ½'	10 ¼'	2288	7,180.00
17001576RS	5035-36	5' & 6 ½'	7 ¼' & 6 ½'	6 ½' & 5'	2363	8,440.00

THREE ROW SPIKE DRAG AND FINISHING REEL FOR SF5035 and SF5135

All Required Hardware and Mounting Brackets
Three Rows of 3/4" x 11" Square Spikes on 9" Centers, 3" Spacing Overall
11" Diameter Reels with Six Spiral Blades and Two 1-3/4" Greaseable Bearings on Each Reel

ORDER CODE	ADAPTS TO	LEFT WING	CENTER SECTION	RIGHT WING	EST. WEIGHT	LIST PRICE
17000832RS	5035-18	5'	8 ¾'	5'	1525	8,649.00
17000834RS	5035-20	5'	10 ¼'	5'	1783	9,316.00
17000836RS	5035-22	6 ½'	9 ½'	6 ½'	1884	9,819.00
17000838RS	5035-24	8'	8 ¾'	8'	2051	10,679.00
17000840RS	5035-26	8 ¾'	9 ½'	8 ¾'	2230	10,999.00
17000842RS	5035-28	9 ½'	9 ½'	9 ½'	2416	12,278.00
17001004RS	5035-30	9 ½'	11 ¾'	9 ½'	2286	12,876.00
17001006RS	5035-32	10 ¼'	12 ½'	10 ¼'	2776	14,172.00
17001008RS	5035-34	11'	12 ½'	11'	2867	14,404.00
17001010RS	5035-36	12 ½'	11 ¾'	12 ½'	2931	14,509.00
17001651RS	5135-36	5' & 7 ¼'	11 ¾'	7 ¼' & 5'	3077	15,355.00
17001650RS	5135-38	7 ¼' & 6'	11 ¾'	6' & 7 ¼'	3264	15,994.00
17001649RS	5135-40	6 ½' & 6 ½'	14 ½'	6 ½' & 6 ½'	3441	16,599.00
17001648RS	5135-42	7 ¼' & 6 ½'	14 ½'	6 ½' & 7 ¼'	3570	17,674.00

NOTE: Rear Tow Hitches are not Available with 3 Row Spike and Reel.

5056 SERIES FIVE SECTION FIELD CULTIVATORS

F.O.B. Beloit, KS

STANDARD CONFIGURATION

4 New 12.5L x 15, GY - FI, Load Range F tubeless tires (Center Section - 45’ and 49’)
4 New 380/55R x 16.5 Tubeless Tire (Center Section 55', 59' & 63')
8 New 8 ply, 11L x 15 tubeless tires (Wings - 45’ to 63’)
4 15" x 10" Eight bolt wheels and hubs with triple lip seals (Center Section 45' and 49')
4 16.5" x 12" 8 Eight bolt wheels and hubs with triple lip seals (Center Section 55', 59' and 63')
8 5" x 10" Six bolt wheels and hubs with triple lip seals and grease zerks (Wings)
4 2 ¾" Diameter slip-in spindles (Center Section - 45' and 49')
4 3” Diameter slip-in spindles (Center Section - 55', 59' and 63')
8 2" Diameter slip-in spindles (Wings)
6 Walking beams with greaseable tapered roller bearings
4 Swivel type gauge wheels with 8.00 x 10 new tires and tubes, five bolt hubs and triple lip seals
1 Cast Single Lip Hitch, 2 ¾" hole, Cat V
Self-Leveling Hitch or (OPTIONAL) Floating Hitch
Single point front mounted depth stop
9" Plain cultivator sweeps (47º) on 6" spacing with 24” under frame clearance
Spring tension shank assemblies (190 lb. point load) or 2 piece S-tine shank assemblies (160 lb. point load)
Safety equipment including: light kit, SMV emblem, and safety chain
Minimum Horsepower Required - 6 HP per foot

MODEL NUMBER	TRANSPORT WIDTH	TRANSPORT HEIGHT
SF5056-45	17' 6"	12' 5"
SF5056-49	17' 6"	14' 5"
SF5056-55	19' 6"	14' 5"
SF5056-59	19' 6"	16' 6"
SF5056-63	19' 6"	16' 6"

These prices reflect the standard configuration. If items other than those listed in the standard configuration are ordered, then the quoted price below will change.
For Quotation Purposes Only – Please Order Items from the Groups on the Next Pages

MODEL NUMBER	CUTTING WIDTH	FRAME SIZES	NO. OF SHANKS	EST. WT.	LIST PRICE
SELF-LEVELING HITCH WITH SPRING TENSION SHANKS ON 6” SPACING					
SF5056-45	45' 0"	8' 8' 12' 8' 8'	91	17,677	72,652.00
SF5056-49	49' 0"	8' 10' 12' 10' 8'	99	18,508	76,081.00
SF5056-55	55' 0"	10' 10' 14' 10' 10'	111	20,336	85,173.00
SF5056-59	59' 0"	10' 12' 14' 12' 10'	119	21,074	88,601.00
SF5056-63	63' 0"	12' 12' 14' 12' 12'	127	21,823	92,029.00
SELF-LEVELING HITCH WITH 2-PIECE S-TINE SHANKS ON 6” SPACING					
SF5056-45	45' 0"	8' 8' 12' 8' 8'	91	16,585	69,558.00
SF5056-49	49' 0"	8' 10' 12' 10' 8'	99	17,320	72,715.00
SF5056-55	55' 0"	10' 10' 14' 10' 10'	111	19,004	81,399.00
SF5056-59	59' 0"	10' 12' 14' 12' 10'	119	19,646	84,555.00
SF5056-63	63' 0"	12' 12' 14' 12' 12'	127	20,299	87,711.00

5056 SERIES FIVE SECTION FIELD CULTIVATORS

ORDER CODE	DESCRIPTION	APPROX. WEIGHT (LBS)	LIST PRICE

Select One Order Code from Each Group, 01 through 08.

Group 01 Base Machine

SF5056-45	50564500, 91 Shank Field Cultivator, 45'	12,642	45,242.00
SF5056-49	50564900, 99 Shank Field Cultivator, 49'	13,145	47,375.00
SF5056-55	50565500, 111 Shank Field Cultivator, 55'	14,441	50,974.00
SF5056-59	50565900, 119 Shank Field Cultivator, 59'	15,179	53,106.00
SF5056-63	50566300, 127 Shank Field Cultivator, 63'	15,272	55,238.00

Group 02 Shanks - Order Quantity Indicated Above (5/8" x 1¾" Shank, 24" Vertical Clearance)

18749BS	Spring Tension Shank Assembly (190 lb Point Load)	37	149.00
12375BS	2 Piece S-Tine Shank Assembly (160 lb Point Load)	25	115.00

Group 03 Sweeps - Order 1 per Shank

1400161S	9" Plain Sweep (47 degree).	4	13.00

Group 04 Tires

Model Size	Center (Order Quantity)	Wings (Order Quantity)
45 & 49	5555YS (4)	3058YS or 3587YS (8)
55, 59 and 63	16949YS (4)	3058YS or 3587YS (8)

Center Tires

5555YS	New 12.5L, GY - FI (Load F) Tire, 8 Bolt Wheel (45' - 49')	104	518.00
16949YS	New 380/55R-16.5 Tubeless Tire, 8 Bolt Wheel (55' - 63').	154	839.00

Wing Tires

3058YS	New 8 Ply, 11L Tubeless Tire, 6 Bolt Wheel	65	319.00
3587YS	New 12 Ply, 11L Tire, 6 Bolt Wheel.	74	350.00

Group 05 Center Section Lift Assemblies - Order 1

7500547RS	Walking Tandems 2 3/4" Spindles for 45' & 49'	295	2,613.00
7500544RS	Walking Tandems 3" Spindles for 55', 59' & 63'	850	4,878.00

Group 06 Wing Lift (Inner & Outer) Assemblies - Order 2

7500394RS	Walking Tandems 2" Spindles for 5056 Wing	192	1,772.00

Group 07 Tongue

7500546RS	Self-Leveling Tongue		1,647.00
7500540RS	Floating Tongue.		3,732.00

Group 08 Tongue Hitch

16785RS	Cat V Single Lip Hitch, Adjustable for 2" or 2-3/4" Pin		240.00

5056 SERIES FIVE SECTION FIELD CULTIVATORS

ORDER CODE	DESCRIPTION	APPROX. WEIGHT (LBS)	LIST PRICE
OPTIONAL EQUIPMENT			
12603RS	Rear Tow Hitch with Hitch Slide and Ball Joint for 55'-63' . . . (Not available with Combo-Type Finishing Attachments, i.e. coil tine and reel)	415	1,961.00
18879RS	Rear Tow Hitch with Hitch Slide and Ball Joint for 45' and 49' . (Not available with Combo-Type Finishing Attachments, i.e. coil tine and reel)	415	1,896.00
2500140RS	Hydraulic Tow Package. . . . . Hoses to Accommodate 7200 Series Soil Conditioner	26	406.00
53081RS	Wiring Harness to Plug Soil Conditioner Lights into . . . . . Implement Lights		170.00

FOUR ROW HIGH RESIDUE SPIKE DRAG

Four Rows of 3/4" x 15" Round Teeth on 3" Overall Spacing, 12" Spacing on Each Row, and All Required Hardware

ORDER CODE	ADAPTS TO	OUTER WING	INNER WING	CENTER SECTION	EST. WEIGHT	LIST PRICE
17001794RS	5056-45	9'	8'	13'	2458	8,868.00
17001793RS	5056-49	9'	10'	13'	2458	9.367.00
17001792RS	5056-55	11'	10'	15'	2829	10,205.00
17001791RS	5056-59	11'	12'	15'	2829	10,534.00
17001786RS	5056-63	13'	13'	13'	2829	10,882.00

FIVE ROW SPIKE DRAG (SINGLE SECTION)

Five Rows of 3/4" x 11" Square Spikes on 9" Centers, 1-3/4" Spacing Overall
All Required Hardware and Mounting Brackets

ORDER CODE	ADAPTS TO	OUTER WING	INNER WING	CENTER SECTION	EST. WEIGHT	LIST PRICE
17001802RS	5056-45	8'	8 ¾'	12 ½'	2553	9,272.00
17001801RS	5056-49	8 ¾'	10 ¼'	12 ½'	2693	9,976.00
17001800RS	5056-55	10 ¼'	10 ¼'	7 ¼' & 7 ¼'	2875	11,523.00
17001799RS	5056-59	10 ¼'	12 ½'	7 ¼' & 7 ¼'	3367	12,664.00
17001790RS	5056-63	12 ½'	12 ½'	7 ¼' & 7 ¼'	3506	12,942.00

FIVE ROW SPIKE DRAG (SPLIT SECTION)

This Attachment Utilizes Smaller Sections and Will Not be as Aggressive as Spike Drags with Larger Sections

Five Rows of 3/4" x 11" Square Spikes on 9" Centers, 1-3/4" Spacing Overall
All Required Hardware and Mounting Brackets

ORDER CODE	ADAPTS TO	OUTER WING	INNER WING	CENTER SECTION	EST. WEIGHT	LIST PRICE
17001806RS	5056-45	8'	8 ¾'	5 ½' & 6 ½'	2547	9,661.00
17001805RS	5056-49	8 ¾'	10 ¼'	5 ½' & 6 ½'	2687	10,389.00
17001804RS	5056-55	10 ¼'	10 ¼'	7 ¼' & 7 ¼'	2850	12,893.00
17001803RS	5056-59	5' & 5'	6 ½' & 5 ½'	7 ¼' & 7 ¼'	3725	14,907.00
17001789RS	5056-63	5 ½' & 6 ½'	5 ½' & 6 ½''	7 ¼' & 7 ¼'	3865	15,113.00

5056 SERIES FIVE SECTION FIELD CULTIVATORS

THREE ROW SPIKE DRAG AND FINISHING REEL

All Required Hardware and Mounting Brackets
Three Rows of 3/4" x 11" Square Spikes on 9" Centers, 3" Spacing Overall
11" Diameter Reels with Six Spiral Blades and Two 1-3/4" Greaseable Bearings on Each Reel

ORDER CODE	ADAPTS TO	LEFT WING	CENTER SECTION	RIGHT WING	EST. WEIGHT	LIST PRICE
17001814RS	5056-45	8' & 8'	12 ½'	8' & 8'	3922	20,765.00
17001813RS	5056-49	8' & 10 ¼'	11 ¾'	8' & 10 ¼'	4070	23,230.00
17001812RS	5056-55	10 ¼' & 11'	13 ¼'	10 ¼' & 11'	4338	23,526.00
17001811RS	5056-59	10' & 12 ½'	14'	10' & 12 ½'	4734	24,747.00
17001785RS	5056-63	12 ½' & 12 ½'	13 ¼'	12 ½' & 12 ½'	5081	26,670.00

NOTE: Rear Tow Hitches are not Available with 3 Row Spike and Reel.

THREE ROW COIL TINE FINISHING HARROWS

Spring Loaded Drag Arms with all Required Hardware and Mounting Brackets
Three Rows of 3/8" x 16" Coil Tines on 7½" Centers, 2½" Spacing Overall, with Angle Adjustment and Backup Protection
15" Spacing Between Rows

ORDER CODE	ADAPTS TO	OUTER WING	INNER WING	CENTER SECTION	EST. WEIGHT	LIST PRICE
17001798RS	5056-45	97 ½"	82 ½"	97 ½" & 52 ½"	1442	7,792.00
17001797RS	5056-49	97 ½"	52 ½" & 52 ½"	67 ½" & 67 ½"	1584	8,457.00
17001796RS	5056-55	52 ½" & 67 ½"	52 ½" & 52 ½"	82 ½" & 67 ½"	1848	9,528.00
17001795RS	5056-59	52 ½" & 67 ½"	52 ½" & 67 ½"	97 ½" & 67 ½"	2050	10,632.00
17001787RS	5056-63	52 ½" & 82 ½"	52 ½" & 82 ½"	67 ½" & 82 ½"	2091	10,816.00

THREE ROW COIL TINE AND FINISHING REEL

Spring Loaded Drag Arms with all Required Hardware and Mounting Brackets
Three Rows of 3/8" x 16" Coil Tines on 7½" Centers, 2½" Spacing Overall, with Angle Adjustment and Backup Protection
11" Diameter Reels with Five Spiral Blades and Two 1-3/4" Greaseable Bearings on Each Reel

ORDER CODE	ADAPTS TO	OUTER WING	INNER WING	CENTER SECTION	EST. WEIGHT	LIST PRICE
17001810RS	5056-45	97 ½"	82 ½"	97 ½" & 52 ½"	3725	21,959.00
17001809RS	5056-49	97 ½"	52 ½" & 52 ½"	67 ½" & 67 ½"	3869	23,748.00
17001808RS	5056-55	52 ½" & 67 ½"	52 ½" & 52 ½"	82 ½" & 67 ½"	4614	24,805.00
17001807RS	5056-59	52 ½" & 67 ½"	52 ½" & 67 ½"	97 ½" & 67 ½"	4876	27,085.00
17001788RS	5056-63	52 ½" & 82 ½"	52 ½" & 82 ½"	67 ½" & 82 ½"	5002	28,511.00

RESERVED

FACTORY OR DEALERSHIP ASSEMBLY AMOUNTS ON 6000 SERIES
(DISCOUNTS DO NOT APPLY)

The factory or dealership set-up amounts will be charged for machines set-up by Sunflower. Set-up amounts are the same whether machines are shipped via our truck (gangs off wings, etc.) or set-up completely and picked up by dealer's truck. Factory assembly charge includes hydraulic hose, hydraulic oil, and tips (hydraulic system is charged). Dealer location assembly charge includes hydraulic hose, and tips. (Hydraulic oil is not included) See note below.

Please Note: SF6630 Set-up rates include reel set-up. SF6631 and SF6650 does not include reel set-up.

MODEL NUMBER	FACTORY ORDER CODE	FACTORY SET-UP RATE	DEALER LOCATION ORDER CODE	DEALER LOCATION SET-UP RATE
SF6221-17 ♦	SET0152S	1,365.00	SET0152DS	1,430.00
SF6221-20 ♦	SET0153S	1,442.00	SET0153DS	1,510.00
SF6333-22 ♦	SET0154S	1,516.00	SET0154DS	1,588.00
SF6333-25 ♦	SET0155S	1,591.00	SET0155DS	1,667.00
SF6333-28 ♦	SET0156S	1,667.00	SET0156DS	1,747.00
SF6333-31 ♦	SET0157S	2,180.00	SET0157DS	2,284.00
SF6333-34 ♦	SET0158S	2,266.00	SET0158DS	2,374.00
SF6333-37 ♦	SET0159S	2,444.00	SET0159DS	2,561.00
SF6433-37 ♦	SET0162S	3,316.00	SET0162DS	3,474.00
SF6433-40 ♦	SET0160S	3,410.00	SET0160DS	3,573.00
SF6433-43 ♦	SET0161S	3,506.00	SET0161DS	3,673.00
SF6631-21	SET0219S	1,137.00	SET0219DS	1,191.00
SF6631-24	SET0220S	1,232.00	SET0220DS	1,290.00
SF6631-27	SET0221S	1,327.00	SET0221DS	1,390.00
SF6631-29	SET0222S	1,365.00	SET0222DS	1,430.00
SF6631-31	SET0022S	1,527.00	SET0022DS	1,599.00
SF6631-33	SET0023S	1,649.00	SET0023DS	1,727.00
SF6631-36	SET0024S	1,800.00	SET0024DS	1,885.00
SF6631-35 ♦	SET0225S	2,840.00	SET0225DS	2,976.00
SF6631-40 ♦	SET0226S	2,945.00	SET0226DS	3,086.00
SF6650-48	SET0218S	4,249.00	SET0218DS	4,452.00
SF6830-21	SET0229S	1,667.00	SET0229DS	1,750.00
SF6830-25	SET0230S	2,180.00	SET0230DS	2,289.00
SF6830-29NC	SET0231S	2,266.00	SET0231DS	2,379.00
SF6830-29WC	SET0232S	2,444.00	SET0232DS	2,566.00
SF6830-33	SET0233S	3,316.00	SET0233DS	3,482.00
SF6830-36	SET0234S	3,410.00	SET0234DS	3,581.00
♦ *Frames are over-width and will require special handling and/or permits.*				
C-Flex Bearing Shield for 6630 & 6631	N/A	N/A	SET0228DS	7.00 ea.
Finishing Reels	SET0227S	11.00 per foot	SET0227DS	12.00 per foot
Hydraulic Disc Gang Adjustment, Add	SET0164S	21.00 per foot	SET0164DS	22.00 per foot
Hydraulic Self Leveling for 6630 & 6631	SET0224S	50.00 per foot	SET0224DS	52.00
Six Row Spike Drag	SET0164S	21.00 per foot	SET0164DS	22.00 per foot
Three Row Spike and Reel	SET0165S	21.00 per foot	SET0165DS	22.00 per foot
Three Row Tine and Reel	SET0166S	24.00 per foot	SET0166DS	25.00 per foot
Four Row Coil Tine Harrow	SET0217S	22.00 per foot	SET0217DS	23.00 per foot

SUNFLOWER RECOMMENDS THESE SET-UP FIGURES BE USED BY DEALERS WHEN TRANSFERRING EQUIPMENT

Dealership Assembly requirements:

1. The dealership assembly service must be ordered separately from the implement. (initiates scheduling of service) Please order dealership assembly service from the field installed options tab in e-ordering.
2. Include in the dealership assembly order request the order and/or invoice number of the implement to be assembled.
3. Dealer supplies hydraulic oil (oil is not included).
4. Dealer supplies a fork lift of sufficient size to be used by AGCO's assembly crew.

6000 SERIES LAND FINISHERS

F.O.B. Beloit, KS

STANDARD CONFIGURATION

All 6000 Series

Tongue Jack (Front)
Disc Gang Reels and Mechanical Disc Gang Depth Adjustment
1-3/4" Gang Shafts with Triple Sealed Greaseable Bearings
19.69" Low Concavity Disc Blades, 6 Gauge or 1/4" Thick with 7-1/2" Spacing and Steel Spools
10” Plain Sweeps (47°) on 9” Spacing with 24” Under Frame Clearance
Spring Tension Shank Assemblies (190 lb. Point Load) or 2 Piece S-tine Shank (160 lb. Point Load)
Rephasing Lift System with Front Mounted Single Point Depth Control
Warning Light Kit, Complete with Wiring to Tractor and an SMV Emblem

Model 6221

6 New 12 Ply, 11L x 15 Tires
6 15" x 10" Six Bolt Wheels and Hubs with 2" Spindles and Triple Lip Seals
3 Walking Beams with Greaseable Tapered Roller Bearings
Adjustable Hitch with Cylinder and Hoses for Centering Tongue in Transport
Cast Single Lip Hitch with 1-7/8" Oblong Hole (7921GS)

Model 6333

4 New 11L x 15 (GY - FI, Load Range F) Tubeless Tires on Center Section; 22-28
4 New 12.5L x 15 (GY - FI, Load Range F) Tubeless Tires on Center Section; 31-37
4 New 8 Ply, 11L x 15 Tubeless Tires on Wings (22’-28’), 12 Ply, 12.5L x 15 on Wings (31’-37’)
4 15" x 10" Eight Bolt Wheels and Hubs with 2-1/4" Spindles and Triple Lip Seals on Center (22'-28')
4 15" x 10" Eight Bolt Wheels and Hubs with 2-3/4” Spindles and Triple Lip Seals on Center (31'-37')
4 15" x 10" Six Bolt Wheels and Hubs with 2" Spindles and Triple Lip Seals on Wings
4 Walking Beams with Greaseable Tapered Roller Bearings
1 Cast Single Lip Hitch with an 1-7/8" Oblong Hole (22’-28’, 7921GS)
1 Cast Single Lip Hitch with an 2” Pin Oblong Hole (31’-37’)

Model 6433 SW

4 New 380/55RX16.5 Wheel and Tire Assembly (Center)
4 New 12 Ply, 12.5L x 15 Tubeless Tires (Wings)
4 15" x 10" Eight Bolt Wheels and Hubs with 2-3/4" Spindles and Triple Lip Seals (Center)
4 15" x 10" Six Bolt Wheels and Hubs with 2" Spindles and Triple Lip Seals (Wings)
4 Walking Beams with Greaseable Tapered Roller Bearings
1 Cast Single Lip Hitch with an 2” Pin Oblong Hole

MODEL NUMBER	SWEEP CUTTING WIDTH	DISC CUTTING WIDTH	NO. OF SHANKS	NO. OF DISCS	TRANSPORT HEIGHT	TRANSPORT WIDTH
SF6221-17♦	17’ 4"	17’ 5"	23	28	11’ 6"	13’ 6"
SF6221-20♦	20’ 4"	21’ 0"	27	34	13’ 1"	15’ 4"
SF6333-22♦	21’ 9"	22’ 10"	29	36	11’ 0"	13’ 4"
SF6333-25♦	24’ 9"	25’ 2"	33	40	12’ 4"	13’ 4"
SF6333-28♦	27’ 9"	29’ 0"	37	46	14’ 2"	13’ 4"
SF6333-31♦	30’ 9"	31’ 6"	41	50	14’ 1"	14’ 6"
SF6333-34♦	33’ 9"	34’ 1"	45	54	14’ 0"	17’ 6"
SF6333-37♦	36’ 9"	36’ 7"	49	58	15’ 1"	17’ 6"
SF6433-37 SW♦	36’ 9”	37’ 3”	49	58	14’ 0”	14’ 6”
SF6433-40 SW♦	39’ 9"	40’ 4"	53	64	14’ 0"	17’ 6"
SF6433-43 SW♦	42’ 9"	42’ 9"	57	68	14’ 0"	17’ 6"

♦ Frames are over-width and will require special handling and/or permits.

6000 SERIES LAND FINISHERS

These prices reflect the standard configuration. If items other than those listed in the standard configuration are ordered, then the quoted price below will change.

For Quotation Purposes Only – Please Order Items from the Groups on the Next Pages

Prices below are listed less Finishing Attachment – See Page 6000-09

MODEL NUMBER	SWEEP CUTTING WIDTH	DISC GANG REEL WT.*	DISC GANG REEL PRICE *	EST. WT.	LIST PRICE 19.69" 6 GAUGE BLADES	LIST PRICE 19.69" ¼" THICK BLADES
WITH SPRING TENSION SHANKS						
SF6221-17	17’ 4"	390	1,617.00	8772	39,209.00	39,387.00
SF6221-20	20’ 4"	455	1,902.00	9315	42,761.00	43,019.00
SF6333-22	21’ 9"	550	2,093.00	12250	48,833.00	49,189.00
SF6333-25	24’ 9"	625	2,377.00	12932	52,969.00	53,355.00
SF6333-28	27’ 9"	700	2,663.00	14135	59,646.00	60,081.00
SF6333-31	30’ 9"	775	2,949.00	15970	68,754.00	69,235.00
SF6333-34	33’ 9"	850	3,235.00	16895	75,153.00	75,702.00
SF6333-37	36’ 9"	925	3,519.00	17290	77,969.00	78,583.00
SF6433-37 SW	36’ 9”	925	3,519.00	21175	88,032.00	88,646.00
SF6433-40 SW	39’ 9”	1000	3,805.00	22100	92,115.00	92,901.00
SF6433-43 SW	42’ 9”	1075	4,091.00	22500	94,209.00	95,061.00
		⇧	⇧			

**** Deduct Disc Gang Reel Price and Weight If Not Wanted***
See Page 6000-11 for Separate Disc Gang Reel Pricing
The Above Prices Are for Deduction Only

WITH S-TINE SHANKS

SF6221-17	17’ 4"	390	1,617.00	8496	38,427.00	38,605.00
SF6221-20	20’ 4"	455	1,902.00	8991	41,843.00	42,101.00
SF6333-22	21’ 9"	500	2,093.00	11902	47,847.00	48,203.00
SF6333-25	24’ 9"	575	2,377.00	12535	51,847.00	52,233.00
SF6333-28	27’ 9"	650	2,663.00	13690	58,388.00	58,823.00
SF6333-31	30’ 9"	750	2,949.00	15477	67,360.00	67,841.00
SF6333-34	33’ 9"	825	3,235.00	16354	73,623.00	74,172.00
SF6333-37	36’ 9"	900	3,519.00	16701	76,303.00	76,917.00
SF6433-37 SW	36’ 9”	925	3,519.00	19131	86,366.00	86,980.00
SF6433-40 SW	39’ 9”	1000	3,805.00	21463	90,313.00	91,099.00
SF6433-43 SW	42’ 9”	1075	4,091.00	21815	92,271.00	93,123.00
		⇧	⇧			

**** Deduct Disc Gang Reel Price and Weight If Not Wanted***
See Page 6000-11 for Separate Disc Gang Reel Pricing
The Above Prices Are for Deduction Only

6000 SERIES LAND FINISHERS

ORDER CODE	DESCRIPTION	APPROX. WEIGHT (LBS)	LIST PRICE

Select One Order Code from Each Group, 01 through 09.
Also Order Harrows from Page 6000-9

Group 01 Base Machine

SF6221-17	62211700, 23 Shank Land Finisher, 17'	3925	22,407.00
SF6221-20	62212000, 27 Shank Land Finisher, 20'	3973	24,078.00
SF6333-22	63332200, 29 Shank Land Finisher, 22'	7774	24,640.00
SF6333-25	63332500, 33 Shank Land Finisher, 25'	8163	25,904.00
SF6333-28	63332800, 37 Shank Land Finisher, 28'	8851	31,128.00
SF6333-31	63333100, 41 Shank Land Finisher, 31'	10053	36,838.00
SF6333-34	63333400, 45 Shank Land Finisher, 34'	10673	39,434.00
SF6333-37	63333700, 49 Shank Land Finisher, 37'	10561	41,090.00
SF6433-37 SW	64333700, Split Wing, 49 Shank Land Finisher, 37'	13200	50,513.00
SF6433-40 SW	64334000, Split Wing, 53 Shank Land Finisher, 40'	13700	52,454.00
SF6433-43 SW	64334300, Split Wing, 57 Shank Land Finisher, 43'	14200	53,187.00

Group 02 Shanks Order Quantity Indicated Above

5/8" x 1¾" Shank, 24" Vertical Clearance

18749BS	Spring Tension Shank Assembly (190 lb Point Load)	37	149.00
12375BS	2 Piece S-Tine Shank Assembly (160 lb Point Load)	25	115.00

Group 03 Sweeps Order 1 per Shank

1400009S	10" Plain Sweeps (47º)	4	16.00

Group 04 Disc Gang Reels

17001658RS	Disc Gang Reel for SF6221-17	390	1,617.00
17001659RS	Disc Gang Reel for SF6221-20	455	1,902.00
17001637RS	Disc Gang Reel for SF6333-22	550	2,093.00
17001638RS	Disc Gang Reel for SF6333-25	625	2,377.00
17001639RS	Disc Gang Reel for SF6333-28	700	2,663.00
17001622RS	Disc Gang Reel for SF6333-31	775	2,949.00
17001629RS	Disc Gang Reel for SF6333-34	850	3,235.00
17001630RS	Disc Gang Reel for SF6333-37	925	3,519.00
17001666RS	Disc Gang Reel for SF6433-37	925	3,519.00
17001602RS	Disc Gang Reel for SF6433-40	1000	3,805.00
17001601RS	Disc Gang Reel for SF6433-43	1075	4,091.00

6000 SERIES LAND FINISHERS

ORDER CODE	DESCRIPTION	APPROX. WEIGHT (LBS)	LIST PRICE

Select One Order Code from Each Group, 01 through 09.

Group 05 Gangs 19.69“ LOW CONCAVITY BLADES ON 7½” SPACING & STEEL SPOOLS

SF6221-17			
12301544S	19.69” 4 Gauge.		4,623.00
12301545S	19.69" 6 Gauge		4,445.00
SF6221-20			
12301546S	19.69” 4 Gauge.		5,639.00
12301547S	19.69" 6 Gauge		5,381.00
SF6333-22			
12301526S	19.69” 4 Gauge.	988	7,005.00
12301529S	19.69" 6 Gauge	988	6,649.00
SF6333-25			
12301527S	19.69” 4 Gauge.	1042	8,963.00
12301530S	19.69" 6 Gauge	1042	8,577.00
SF6333-28			
12301528S	19.69” 4 Gauge.	1317	9,519.00
12301531S	19.69" 6 Gauge	1317	9,084.00
SF6333-31			
12301520S	19.69” 4 Gauge.	1416	10,039.00
12301521S	19.69" 6 Gauge	1416	9,558.00
SF6333-34			
12301522S	19.69” 4 Gauge.	1482	12,237.00
12301523S	19.69" 6 Gauge	1482	11,688.00
SF6333-37			
12301524S	19.69” 4 Gauge.	1605	12,518.00
12301525S	19.69" 6 Gauge	1605	11,904.00
SF6433-37 SW			
12301548S	19.69” 4 Gauge.	1605	12,518.00
12301549S	19.69" 6 Gauge	1605	11,904.00
SF6433-40 SW			
12301518S	19.69” 4 Gauge.	3909	12,393.00
12301519S	19.69" 6 Gauge	3604	11,607.00
SF6433-43 SW			
12301516S	19.69” 4 Gauge.	4093	12,874.00
12301517S	19.69" 6 Gauge	3768	12,022.00

6000 SERIES LAND FINISHERS

ORDER CODE	DESCRIPTION	APPROX. WEIGHT (LBS)	LIST PRICE

Select One Order Code from Each Group, 01 through 09.

Group 06 Disc Gang Adjustment

SF6221

7500431RS	Standard Disc Gang Option	150	1,188.00
7500432RS	Hydraulic Disc Gang Adjustment	320	3,192.00

SF6333-22' and 25'

7500424RS	Standard Disc Gang Option	190	1,483.00
7500421RS	Hydraulic Disc Gang Adjustment	840	4,809.00

SF6333-28'

7500424RS	Standard Disc Gang Option	190	1,483.00
7500425RS	Hydraulic Disc Gang Adjustment	650	4,809.00

SF6333-31'

7500416RS	Standard Disc Gang Option	247	2,080.00
7500417RS	Hydraulic Disc Gang Adjustment	1250	6,381.00

SF6333-34'

7500416RS	Standard Disc Gang Option	247	2,080.00
7500401RS	Hydraulic Disc Gang Adjustment	1250	6,381.00

SF6333-37'

7500422RS	Standard Disc Gang Option	306	2,080.00
7500423RS	Hydraulic Disc Gang Adjustment	1250	6,381.00

SF6433-37'

7500435RS	Standard Disc Gang Option	330	2,227.00
7500436RS	Hydraulic Disc Gang Adjustment	1055	8,602.00

SF6433-40' and 43'

7500406RS	Standard Disc Gang Option	396	2,523.00
7500407RS	Hydraulic Disc Gang Adjustment	1130	8,897.00

ORDER CODE	DESCRIPTION	APPROX. WEIGHT (LBS)	LIST PRICE

Select One Order Code from Each Group, 01 through 09.

Group 07 Tires

MODEL SIZE	ORDER QUANTITY	
	CENTERS	WINGS
SF6221	(4) 3587YS	(2) 3587YS
SF6333 22' through 28	(4) 5552YS	(4) 3058YS
SF6333 31' through 37'	(4) 5579YS	(4) 3588S
SF6433 SW 37' through 43'	(4) 16949YS	(4) 3588S

3587YS	(1) New 12 Ply, 11L Tubeless Tire, 6 Bolt Wheel	74	350.00
3058YS	(1) New 8 Ply, 11L Tubeless Tire, 6 Bolt Wheel	65	319.00
5552YS	(1) New 11L x 15 (GY - FI) Load Range F Tubeless Tire . . . 8 Bolt Wheel (15" x 10")	85	449.00
3588S	(1) New 12 Ply, 12.5L x 15 Tubeless Tire . . . . . 6 Bolt Wheel (15" x 10")	80	367.00
5579YS	(1) New 12.5L, GY - FI, Load Range F Tire, 8 Bolt Wheel, . . (2-3/4" Spindle)	110	534.00
16949YS	(1) New 380/55R-16.5 Tubeless Tire, 8 Bolt Wheel	154	839.00

Group 08 Lift Assemblies

SF6221

7500434RS	Two Standard Walking Tandems	985	3,497.00

SF6333-22' through 28'

7500420RS	Two Heavy Duty and Two Standard Walking Tandems	930	5,951.00

SF6333-31'

7500418RS	Two Heavy Duty and Two Standard Walking Tandems	1008	6,960.00

SF6333-34' and 37'

7500419RS	Two Heavy Duty and Two Standard Walking Tandems	1008	7,687.00

SF6433-37'

7500437RS	Two Heavy Duty and Two Standard Walking Tandems	1008	6,960.00

SF6433-40' and 43'

7500400RS	Two Heavy Duty and Two Standard Walking Tandems	1587	8,157.00

6000 SERIES LAND FINISHERS

ORDER CODE	DESCRIPTION	APPROX. WEIGHT (LBS)	LIST PRICE

Select One Order Code from Each Group, 01 through 09.

Group 09 Hitches for SF 6221 and SF 6333-22' through 28' Only

SF6221

7921GS	Cast Single Lip Hitch with 1-7/8" Pin Hole	29	160.00
7960GS	Double Lip Hitch with 1-7/8" Pin Hole	29	160.00
7924GS	Double Lip Hitch with 1-9/16" Pin Hole	29	160.00

SF 6333-22' through 28

7921GS	Cast Single Lip Hitch with 1-7/8" Pin Hole	29	160.00
6933GS	Cast Single Lip Hitch 2" Pin Hole	29	160.00
7960GS	Double Lip Hitch with 1-7/8" Pin Hole	29	160.00

OPTIONAL EQUIPMENT - For Current Machines ONLY

Rear Tow Hitches with Hitch Slide & Ball Joint

13017RS	Rear Tow Hitch For SF6221	415	1,576.00
12632RS	Rear Tow Hitch For SF6333-22 through 28'	415	2,782.00
12616RS	Rear Tow Hitch For SF6333-31 and 6433-37	415	2,782.00
12617RS	Rear Tow Hitch For SF6333-34 and 37' and 6433-40 and 43'	415	2,948.00

Hydraulic Tow Package – Hoses to Accommodate 7200 Series Soil Conditioner

2500144RS	SF6333-22 through 28'		446.00
2500143RS	SF6221 and SF6333-31 through 6433-43'	26	446.00
53081RS	Wiring Harness to Plug Soil Conditioner Lights into Implement Lights		170.00
18663BS	Gang Wrench, 2-3/4"	35	89.00

ATTACHMENTS FOR 6000 SERIES LAND FINISHERS

SIX ROW HIGH RESIDUE SPIKE DRAG

Six Rows of 3/4” x 16" Round Teeth on 2.2" Overall Spacing
12" Spacing Each Row for the First Four Bars, and 9" Spacing Each Row for the Last Two Bars
All Required Hardware

ORDER CODE	ADAPTS TO	LEFT WING	CENTER SECTION	RIGHT WING	EST. WEIGHT	LIST PRICE
17001660RS	SF6221-17	8’	11’		943	6,763.00
17001661RS	SF6221-20	9’	12 ½’		993	7,045.00
17001640RS	SF6333-22	7’	8 ½’	7’	1765	8,358.00
17001641RS	SF6333-25	8 ½’	8 ½’	8 ½’	2007	8,505.00
17001642RS	SF6333-28	10’	8 ½’	10’	2247	9,279.00
17001624RS	SF6333-31	11 ½’	8 ½’	11 ½’	2488	10,034.00
17001627RS	SF6333-34	10 ¼’	14’	10 ¼’	2729	10,131.00
17001628RS	SF6333-37	11 ¾’	14’	11 ¾’	2970	10,415.00
17001668RS	SF6433-37	6’ & 7’	8 ½’	7’ & 6’	3210	10,930.00
17001604RS	SF6433-40	6’ & 7’	14’	7’ & 6’	3210	11,358.00
17001603RS	SF6433-43	7’ 6” & 7’	14’	7’ & 7’ 6”	3450	11,570.00

THREE ROW SPIKE DRAG AND FINISHING REEL

Spring Loaded Drag Arms with all Required Hardware and Mounting Brackets
Three Rows of 3/4" x 11" Square Spikes on 9" Centers, 3" Spacing Overall
11" Diameter Reels with Six Spiral Blades and Two 1-3/4" Greaseable Bearings on Each Reel

ORDER CODE	ADAPTS TO	LEFT WING	CENTER SECTION	RIGHT WING	EST. WEIGHT	LIST PRICE
17001662RS	SF6221-17	7 ¼’	4 ½’ & 6 ½’		1385	7,653.00
17001663RS	SF6221-20	8’	4 ½’ & 8’		1511	8,606.00
17001634RS	SF6333-22	7 ¼'	8’	7 ¼'	1639	9,248.00
17001635RS	SF6333-25	8 ¾’	8’	8 ¾’	1863	11,000.00
17001636RS	SF6333-28	10 ¼'	8’	10 ¼'	2086	13,306.00
17001623RS	SF6333-31	11’	9 ½'	11’	2310	14,749.00
17001625RS	SF6333-34	11’	12 ½’	11’	2533	15,278.00
17001626RS	SF6333-37	12 ½’	12 ½'	12 ½’	2757	15,725.00
17001667RS	SF6433-37	5’ & 8’	9 ½'	8’ & 5’	3210	16,447.00
17001606RS	SF6433-40	5’ & 8’	6 ½’ & 6 ½’	8’ & 5’	3695	17,604.00
17001605RS	SF6433-43	6 ½’ & 8’	6 ½’ & 6 ½’	8’ & 6 ½’	3840	17,960.00

ATTACHMENTS FOR 6000 SERIES LAND FINISHERS

THREE ROW COIL TINE AND FINISHING REEL

Spring Loaded Drag Arms with all Required Hardware and Mounting Brackets
Three Rows of 3/8" x 16" Coil Tines with Angle Adjustment & Backup Protection
11" Diameter Reels with Six Spiral Blades and Two 1-3/4" Greaseable Bearings on Each Reel
Independent Operating and Adjustable Tine and Reel Sections

ORDER CODE	ADAPTS TO	LEFT WING	CENTER SECTION	RIGHT WING	EST. WEIGHT	LIST PRICE
17001664RS	6221-17	82 ½"	52 ½" & 67 ½"		1828	9,817.00
17001665RS	6221-20	97 ½"	52 ½" & 97 ½"		1979	10,913.00
17001643RS	6333-22	82 ½"	97 ½"	82 ½"	2070	11,364.00
17001644RS	6333-25	97 ½"	97 ½"	97 ½"	2356	12,851.00
17001645RS	6333-28	52 ½" & 52 ½"	97 ½"	52 ½" & 52 ½"	2386	15,447.00
17001631RS	6333-31	52 ½" & 67 ½"	52 ½" & 52 ½"	67 ½" & 52 ½"	2512	16,923.00
17001632RS	6333-34	52 ½" & 67 ½"	67 ½" & 67 ½"	67 ½" & 52 ½"	3378	17,245.00
17001633RS	6333-37	67 ½" & 67 ½"	67 ½" & 67 ½"	67 ½" & 67 ½"	3528	17,680.00
17001767RS	6433-37	67 ½" & 82 ½"	52 ½" & 52 ½"	82 ½" & 67 ½"	3460	18,332.00
17001768RS	6433-40	67 ½" & 82 ½"	82 ½" & 67 ½"	82 ½" & 67 ½"	3650	19,195.00
17001699RS	6433-43	82 ½" & 82 ½"	82 ½" & 67 ½"	82 ½" & 82 ½"	4100	20,643.00

CHOPPER REEL & THREE ROW SPIKE DRAG

All Required Hardware and Mounting Brackets
Two Trunnion Bearings per Reel
16" Diameter Reel with Offset Chopper Blades in 15" Lengths
Three Rows of 3/4" x 11" Square Spikes on 1-3/4" Centers
Rear Jack

ORDER CODE	ADAPTS TO	LEFT WING	CENTER SECTION	RIGHT WING	EST. WEIGHT	LIST PRICE
17001708RS	6221-17	7¼'	11 ¾'		2635	11,433.00
17001709RS	6221-20	8'	12 ½'		3100	12,114.00
17001710RS	6333-22	6 ½'	9 ½'	6 ½'	3410	14,062.00
17001711RS	6333-25	8'	9 ½'	8'	3875	14,803.00
17001712RS	6333-28	9 ½'	9 ½'	9 ½'	4340	19,480.00
17001713RS	6333-31	11'	10 ¼'	11'	4805	20,778.00
17001714RS	6333-34	11'	6 ½' & 6 ½'	11'	5270	23,136.00
17001715RS	6333-37	11 ¾'	6 ½' & 6 ½'	11 ¾'	5735	23,593.00
17001716RS	6433-37	5 ¾' & 5 ¾'	6 ½' & 6 ½'	5 ¾' & 5 ¾'	5735	21,942.00
17001717RS	6433-40	5 ¾' & 7 ¼'	6 ½' & 6 ½'	7 ¼' & 5 ¾'	6200	24,425.00
17001718RS	6433-43	6 ½' & 7 ¼'	6 ½' & 6 ½'	7 ¼' & 6 ½'	6665	23,594.00

FOUR ROW COIL TINE HARROW

Spring Loaded Drag Arms with all Required Hardware and Mounting Brackets
Four Rows of 3/8" x 16" Coil Tines on 7-1/2" Centers, 1.88" Spacing Overall, with Angle Adjustment and Backup Protection 15" Spacing Between Rows

ORDER CODE	ADAPTS TO	LEFT WING	CENTER SECTION	RIGHT WING	EST. WEIGHT	LIST PRICE
17001669RS	6433-37	67 ½" 82 ½"	52 ½" 52 ½"	82 ½" 67 ½"	1649	8,152.00
17001608RS	6433-40	67 ½" 82 ½"	82 ½" 67 ½"	82 ½" 67 ½"	1832	8,474.00
17001607RS	6433-43	82 ½" 82 ½"	82 ½" 67 ½"	82 ½" 82 ½"	1954	8,596.00

ATTACHMENTS FOR 6000 SERIES LAND FINISHERS

ORDER CODE	DESCRIPTION	APPROX. WEIGHT (LBS)	LIST PRICE

ATTACHMENTS FOR 6000 SERIES LAND FINISHERS
DISC GANG REELS ** (For Field Installation)

17001658RFS	Disc Gang Reel for SF6221-17	390	4,569.00
17001659RFS	Disc Gang Reel for SF6221-20	455	5,372.00
17001637RFS	Disc Gang Reel for SF6333-22	550	5,446.00
17001638RFS	Disc Gang Reel for SF6333-25	625	6,257.00
17001639RFS	Disc Gang Reel for SF6333-28	700	6,318.00
17001622RFS	Disc Gang Reel for SF6333-31	775	6,682.00
17001629RFS	Disc Gang Reel for SF6333-34	850	7,514.00
17001630RFS	Disc Gang Reel for SF6333-37	925	7,554.00
17001666RFS	Disc Gang Reel for SF6433-37	925	7,554.00
17001602RFS	Disc Gang Reel for SF6433-40	1000	8,132.00
17001601RFS	Disc Gang Reel for SF6433-43	1075	8,241.00

***** Note: Will Not Adapt To Older Model Numbered Machines***

6610 SERIES VERTICAL TILLAGE TOOL

F.O.B. Beloit, KS

STANDARD CONFIGURATION

4 15” x 10” Six Bolt Wheels and Hubs, 2-1/4” Spindles and Triple Lip Seals
4 New 11L GY - FI - F Tires (5333YS)
1 Single Point Depth Control with Rephasing Lift System
1 Hydraulic Self-leveling System with Level Indicator
1 Cast Single Lip Hitch with 1-7/8” Hole, Category lll
22” x 6 ga Sunflower Saber ™ Blades, 7-1/2” Blade Spacing
18° Gang Angles Front and Rear
Channel Iron Trash Bars between Disc Blades
High Strength 1-3/4” Round Stress Proof Gang Shafts
C-Flex Bearing Standards with Triple Sealed Trunnion Bearings
Maintenance Free (UHMW Pivot Bearings) Lift System
11” Diameter Finishing Reel with Six Carbon Blades and Service Free Bearings
Shipping Stand
Safety Equipment Including: Light Kit, SMV Emblem and Safety Chain

DO NOT USE THESE PRICES TO DEDUCT DISC GANG REEL

These prices reflect the standard configuration. If items other than those listed in the standard configuration are ordered, then the quoted price below will change.

For Quotation Purposes Only – Please Order Items from the Groups on the Next Pages

MODEL NUMBER	CUTTING WIDTH	BLADE DIAMETER	BLADE THICKNESS *	EST. WT.	LIST PRICE
6610-11	10' 7"	22"	6 ga	7232	33,000.00
6610-11	10' 8"	22"	4 ga	7404	33,600.00
6610-14	14' 3"	22"	6 ga	8785	38,500.00
6610-14	14' 4"	22"	4 ga	9063	39,100.00

6610 SERIES VERTICAL TILLAGE TOOL

ORDER CODE		DESCRIPTION	APPROX. WEIGHT (LBS)	LIST PRICE
Select One Order Code from Each Group, 01 through 07.				
Group 01 Base Machine				
SF6610-11	66101100	6610-11 Vertical Tillage Tool	3965	16,433.00
SF6610-14	66101400	6610-14 Vertical Tillage Tool	4525	19,008.00
Group 02 Gangs				
		6610-11		
12301747S		22" 4 Gauge, 7.5" Spacing, C-Flex with Trash Bars	3242	9,850.00
12301748S		22" 6 Gauge, 7.5" Spacing, C-Flex with Trash Bars	3039	9,250.00
		6610-14		
12301745S		22" 4 Gauge, 7.5" Spacing, C-Flex with Trash Bars	4300	12,500.00
12301746S		22" 6 Gauge, 7.5" Spacing, C-Flex with Trash Bars	4023	11,900.00
Group 03 Tires				
5333YS		(1) New 11L x 15 (GY - FI) Load Range F 6 Bolt Wheel (15" x 10")	320	425.00
Group 04 Levelers				
		6610-11		
2500202RS		Standard Self-Leveling Assembly	150	984.00
2500203RS		Hydraulic Self-Leveling Assembly	180	1,482.00
		6610-14		
2500204RS		Standard Self-Leveling Assembly	160	984.00
2500205RS		Hydraulic Self-Leveling Assembly	185	1,482.00
Group 05 Hitches				
7500552S		Cast Single Lip Hitch, 1 7/8" Hole Category III	29	160.00
7500553S		Hitch Clevis, 4" Double 1 9/16" Hole	21	160.00
7500554S		Cast Single Lip Hitch, 2" Hole Category IV	29	160.00
7500555S		Hitch Clevis, 4" Double 1 7/8" Hole	22	160.00

6610 SERIES VERTICAL TILLAGE TOOL

ORDER CODE	DESCRIPTION	APPROX. WEIGHT (LBS)	LIST PRICE

Group 08 Finishing Attachments

Flat Bar Reel - Overlapping Spiral Reels - 11" or 14" Diameters with Six Flat Carbon Blades, Tripled Lipped Sealed Bearings and Spring Loaded Parallel Mounting Arms

	6610-11		
17001889RS	11" Diameter Flat Bar Reel	949	3,975.00
17001894RS	11" Diameter Hydraulic Flat Bar Reel	994	5,450.00
17001890RS	14" Diameter Flat Bar Reel	1054	4,100.00
17001895RS	14" Diameter Hydraulic Flat Bar Reel	1099	5,600.00
	6610-14		
17001902RS	11" Diameter Hydraulic Flat Bar Reel	1146	4,250.00
17001897RS	11" Diameter Flat Bar Reel	1103	5,900.00
17001898RS	14" Diameter Flat Bar Reel	1235	4,550.00
17001903RS	14" Diameter Hydraulic Flat Bar Reel	1278	6,200.00

Chevron Round Bar Reel - Overlapping Chevron Reel -14" Diameter with Ten Round Carbon Chevron Formed Rods, Tripled Lipped Sealed Bearings and Spring Loaded Parallel Mounting Arms

	6610-11		
17001891RS	14" Chevron Round Bar Reel	1116	4,175.00
17001896RS	14" Chevron Hydraulic Round Bar Reel	1161	5,675.00
	6610-14		
17001899RS	14" Chevron Round Bar Reel	1315	4,625.00
17001904RS	14" Chevron Hydraulic Round Bar Reel	1359	6,275.00

Group 09 Three Row Spike Drag - Optional

17001893RS	Three Row Spike Drag for 6610-11	450	1,975.00
17001901RS	Three Row Spike Drag for 6610-14	770	2,425.00

Group 10 Heavy Duty Three Row Coil Tine - Optional

17001892RS	HD 3 Row Coil Tine for 6610-11	814	3,950.00
17001900RS	HD 3 Row Coil Tine for 6610-14	1033	4,150.00

Optional

18663BS	Gang Wrench, 2-3/4"	35	89.00
53020BS	C-Flex Standard Shield for 6610-11	60	200.00
53021BS	C-Flex Standard Shield for 6610-14	75	250.00

6630 SERIES VERTICAL TILLAGE TOOL
F.O.B. Beloit, KS

STANDARD CONFIGURATION

6 15” x 10” Eight Bolt Wheels and Hubs, 2-1/4” Spindles and Triple Lip Seals on 21’
6 New 11L GY - FI - F Tires on 21’ (5552YS)
8 15” x 10” Eight Bolt Wheels and Hubs, 2-1.4” Spindles and Triple Lip Seals on 24’, 27’, 29’ and 32’
8 New 11L GY - FI - F Tires on 24’, 27’, 29’ and 32’ (5552YS)
1 Single Point Depth Control with Rephasing Lift System
1 Hydraulic Self-leveling System with Level Indicator
1 Cast Single Lip Hitch with 1-7/8” Pin on 21 and 24’ and a 2” Pin on 27’, 29 and 32’
2 Heavy-duty Gauge Wheels with 8.00 x 10 Tires
22” x 6 ga Sunflower Saber ™ Blades, 7-1/2” Blade Spacing
18° Gang Angles Front and Rear
Channel Iron Trash Bars Between Disc Blades
High Strength 1-3/4” Round Stress Proof Gang Shafts
C-Flex Bearing Standards with Triple Sealed Trunnion Bearings
Maintenance Free Lift and Fold Systems
Automatic Transport Lock with Relief Valve
11” Diameter Finishing Reel with Six Carbon Blades
Safety Equipment Including: Light Kit, SMV Emblem and Safety Chain

These prices reflect the standard configuration. If items other than those listed in the standard configuration are ordered, then the quoted price below will change.

For Quotation Purposes Only – Please Order Items from the Groups on the Next Pages

MODEL NUMBER	CUTTING WIDTH	BLADE DIAMETER	BLADE THICKNESS *	EST. WT.	LIST PRICE
6630-21	21' 8"	22"	6 ga	12192	55,482.00
6630-24	24' 5"	22"	6 ga	12578	57,991.00
6630-27	27' 2"	22"	6 ga	13583	61,283.00
6630-29	29' 11"	22"	6 ga	17348	69,070.00
6630-32	32' 8"	22"	6 ga	21090	74,937.00

Wing Frames on 6630-29 and 6630-32 are over-width (10' 4" and 11' 4") and will require special handling and/or permits.

The 6630-21 through 6630-32 are Subject to Availability

6630 SERIES VERTICAL TILLAGE TOOL

ORDER CODE		DESCRIPTION	APPROX. WEIGHT (LBS)	LIST PRICE
Select One Order Code from Each Group, 01 through 09.				
Group 01 Base Machine				
SF6630-21WC	66302100	6630-21WC Vertical Tillage Tool	5221	25,308.00
SF6630-24WC	66302400	6630-24WC Vertical Tillage Tool	5929	26,053.00
SF6630-27	66302700	6630-27 Vertical Tillage Tool	6689	26,857.00
SF6630-29	66302900	6630-29 Vertical Tillage Tool	8027	30,782.00
SF6630-32	66303200	6630-32 Vertical Tillage Tool	7867	31,916.00
Group 02 Lifts - Center				
7500497RS		Standard Lift Assembly for All Sizes, (2-1/4" Spindle)		3,052.00
Group 03 Lifts - Wings				
7500498RS		Standard Lift Assembly for 21' - 24' (2-1/4" Spindle		1,684.00
7500499RS		Standard Lift Assembly for 27' (2-1/4" Spindle)		1,742.00
7500500RS		Standard Lift Assembly for 29' -32' (2-1/4" Spindle)		1,896.00
Group 04 Gangs				
12301654S		22" 6 Gauge, 7.5" Spacing, C-Flex for 21'		15,325.00
12301655S		22" 6 Gauge, 7.5" Spacing, C-Flex for 24'		15,844.00
12301656S		22" 6 Gauge, 7.5" Spacing, C-Flex for 27'		17,756.00
12301657S		22" 6 Gauge, 7.5" Spacing, C-Flex for 29'		20,054.00
12301658S		22" 6 Gauge, 7.5" Spacing, C-Flex for 32'		23,453.00
Group 05 Tires - (Order Qty 6 on 21' through 27', Order Qty 8 on 29' and 32')				
5552YS		(1) New 11L x 15 (GY - FI) Load Range F Tubeless Tire 8 Bolt Wheel (15" x 10")	85	449.00
Group 06 Dual Wheel Kit - Required on 24' & 27' (optional on 21' - see Optional Equipment)				
7500501YS		Dual Wheel Kit with Two New, 11L x 15 Tubeless Tires		1,121.00
Group 07 Levelers				
2500116RS		Hydraulic Self-Leveling System with Level Indicator	155	1,513.00

The 6630-21 through 6630-32 are Subject to Availability

6630 SERIES VERTICAL TILLAGE TOOL

ORDER CODE	DESCRIPTION	APPROX. WEIGHT (LBS)	LIST PRICE

Select One Order Code from Each Group, 01 through 08.

Group 08 Hitches

For Use with 21' through 24'

7921GS	Cast Single Lip Hitch for 1-7/8" Pin Hole, Category III	29	160.00
7924GS	Double Lip Hitch with 1-9/16" Pin Hole	29	160.00

For Use with 27'

6933GS	Cast Single Lip Hitch for 2" Pin Hole, Category IV	29	160.00
7960GS	Double Lip Hitch with 1-7/8" Pin Hole	29	160.00

For Use with 29' through 32'

6933GS	Cast Single Lip Hitch for 2" Pin Hole, Category IV	29	160.00
7960GS	Double Lip Hitch with 1-7/8" Pin Hole	29	160.00
7921GS	Cast Single Lip Hitch for 1-7/8" Pin Hole, Category III	29	160.00
7924GS	Double Lip Hitch with 1-9/16" Pin Hole	29	160.00

Group 09 Attachments - Optional

17001756RS	Finishing Reel for 6630-21WC	1140	5,746.00
17001757RS	Finishing Reel for 6630-24WC	1251	5,870.00
17001758RS	Finishing Reel for 6630-27	1288	6,388.00
17001759RS	Finishing Reel for 6630-29	1590	8,021.00
17001760RS	Finishing Reel for 6630-32	1636	9,355.00

Group 10 - Heavy Duty Three Row Coil Tine - Optional

17001776RS	Heavy Duty 3 Row Coil Tine for 6630-21	1650	7,374.00
17001778RS	Heavy Duty 3 Row Coil Tine for 6630-24	1750	7,815.00
17001779RS	Heavy Duty 3 Row Coil Tine for 6630-27	2000	8,042.00
17001780RS	Heavy Duty 3 Row Coil Tine for 6630-29	1900	7,929.00
17001781RS	Heavy Duty 3 Row Coil Tine for 6630-32	2550	9,593.00

OPTIONAL EQUIPMENT - For Current Machines ONLY

7500501YS	Dual Wheel Kit with Two New, 11L x 15 Tubeless Tires for 6630-21		1,121.00
18663BS	Gang Wrench, 2-3/4"	35	89.00
7500502BS	Wheel Seal Protector Kit (Delta Special)	100	347.00

The 6630-21 through 6630-32 are Subject to Availability

6631 SERIES VERTICAL TILLAGE TOOL

F.O.B. Beloit, KS

STANDARD CONFIGURATION

6 New 11l GY - FI Tires with Eight Bolt Wheels and 2 1/4" Slip in Spindles (21') (5552YS)
8 New 11l GY - FI Tires with Eight Bolt Wheels and 2 1/4" Slip in Spindles (24') (5552YS)
8 New 12.5L (GY - FI - I) Tubeless Tires with Eight Bolt Wheel and 2-1/4" Slip in Spindles (27' and 29') (5555YS)
4 New 380/55R x 16.5 Tubeless Tires with Eight Bolt Wheels and 2-3/4" Slip in Spindles (Centers 31' through 36') (16949YS)
4 New 12.5L (GY - FI - I) Tubeless Tires with Eight Bolt Wheel and 2-1/4" Slip in Spindles (Wings 31' through 40') (5555YS)
1 Single Point Depth Control with Rephasing Lift System
1 Hydraulic Self-Leveling System with Level Indicator (21' through 29') (2500193RS)
2 Hydraulic Self-Leveling System with Level Indicator (31' and 36') (2500192RS)
2 Hydraulic Self-Leveling System with Level Indicator (35' and 40') (2500192RS)
Center Lifts (2 3/4" Spindle) (For Split Wing Models 6631-35 and 6631-40)
Wing Lifts (2 1/4" Spindle) (For Split Wing Models 6631-35 and 6631-40)
1 Cast Single Lip Hitch, 2 3/4" Hole, Cat V
2 Heavy Duty Gauge Wheels with 8.00 x 10 tires
22” x 6 ga Sunflower Saber ™ Blades, 7½” blade spacing
18° Gang Angles Front and Rear
Channel Iron Trash Bars between Disc Blades
High Strength 1-3/4” Round Stress Proof Gang Shafts
C-Flex Bearing Standards with Triple Sealed Trunnion Bearings
Maintenance Free Lift and Fold Systems
1 2 ¾" Disc Gang Wrench
11” Diameter Flat Bar Finishing Reel with Six Carbon Blades
Safety Equipment including: Light Kit, SMV Emblem and Safety Chain

MODEL	TRANSPORT WIDTH	TRANSPORT HEIGHT	TRUE CUTTING WIDTH	FRAME SIZE	WEIGHT (KG) w/o ATTACH	GANG BEARING QTY	BLADE FRONT/REAR QTY
SF6631-21	13' 5" (4.1)	10' 10" (3.3)	20' 2" (6.1)	6 - 9 - 6	14,405 (6,289)	10/10	34/38
SF6631-24	13’ 5” (4.1)	12’ 2” (3.7)	22’ 7” (6.9)	7 ½ - 9 - 7 ½	15,683 (7,114)	10/12	38/42
SF6631-27	13’ 5” (4.1)	13’ 10” (4.2)	26’ 3” (8.0)	9 - 9 - 9	17,633 (7,998)	12/12	44/48
SF6631-29	13’ 5” (4.1)	15’ 0” (4.6)	28’ 8” (8.7)	10 - 9 - 10	18,705 (8,485)	12/14	48/52
SF6631-31	17’ 5” (5.3)	13’ 10” (4.2)	30’ 0” (9.1)	9 - 13 - 9	19,885 (9,020)	14/14	50/54
SF6631-33	17’ 5” (5.3)	15’ 0” (4.6)	32’ 6” (9.9)	10 - 13 - 10	20,957 (9,506)	14/16	54/58
SF6631-36	17’ 5” (5.3)	16’ 1” (4.9)	34’ 9” (10.6)	11½ -13 - 11½	21,986 (9,973)	16/16	58/62
Split Wing							
SF6631-35	15’ 4” (4.7)	13’ 7” (4.1)	32’ 7” (9.9)	5 - 7½ - 10 - 7½ -5	24,749 (11,226)	16/18	54/58
SF6631-40	17’ 8” (5.4)	13’ 7” (4.1)	37’ 5” (11.4)	6 -7½ -13-7½ - 6	28,824 (13,075)	18/18	62/66

These prices reflect the standard configuration. If items other than those listed in the standard configuration are ordered, then the quoted price below will change.

For Quotation Purposes Only – Please Order Items from the Groups on the Next Pages

MODEL NUMBER	CUTTING WIDTH	BLADE DIAMETER	BLADE THICKNESS *	EST. WT.	LIST PRICE
6631-21	20' 2"	22"	6 GA	14,405	57,092.00
6631-24	22' 7"	22"	6 GA	15,683	63,020.00
6631-27	26' 3"	22"	6 GA	17,633	73,162.00
6631-29	28' 8"	22"	6 GA	18,705	74,879.00
6631-31	30' 0"	22"	6 GA	19,885	82,875.00
6631-33	32' 6"	22"	6 GA	20,957	86,087.00
6631-36	32' 7"	22"	6 GA	24,749	87,514.00
Split Wing					
6631-35	34' 9"	22"	6 GA	21,986	96,843.00
6631-40	37' 5"	22"	6 GA	28,824	103,433.00

6631 SERIES VERTICAL TILLAGE TOOL

ORDER CODE	DESCRIPTION	APPROX. WEIGHT (LBS)	LIST PRICE
	Select One Order Code from Each Group, 01 through 06.		
Group 01 Base Machine			
SF6631-21	66312100 6631-21 Vertical Tillage Tool	7384	26,361.00
SF6631-24	66312400 6631-24 Vertical Tillage Tool	7846	28,524.00
SF6631-27	66312700 6631-27 Vertical Tillage Tool	8778	32,693.00
SF6631-29	66312900 6631-29 Vertical Tillage Tool	9199	35,039.00
SF6631-31	66313100 6631-31 Vertical Tillage Tool	8660	36,502.00
SF6631-33	66313300 6631-33 Vertical Tillage Tool	9070	38,420.00
SF6631-36	66313600 6631-36 Vertical Tillage Tool	9548	38,664.00
SF6631-35	66313500 6631-35 Split-Wing Vertical Tillage Tool	9507	48,397.00
SF6631-40	66314000 6631-40 Split-Wing Vertical Tillage Tool	12070	51,788.00
Group 02 Gang Saber Blades, 7-1/2" Blade Spacing			
	6631-21		
12301732S	22" 6 Gauge, 7.5" Spacing, C-Flex	6102	19,360.00
12301736S	22" 4 Gauge, 7.5" Spacing, C-Flex		19,860.00
	6631-24		
12301733S	22" 6 Gauge, 7.5" Spacing, C-Flex	6769	21,223.00
12301737S	22" 4 Gauge, 7.5" Spacing, C-Flex		21,923.00
	6631-27		
12301734S	22" 6 Gauge, 7.5" Spacing, C-Flex	7620	22,919.00
12301738S	22" 4 Gauge, 7.5" Spacing, C-Flex		23,819.00
	6631-29		
12301735S	22" 6 Gauge, 7.5" Spacing, C-Flex	8271	24,638.00
12301739S	22" 4 Gauge, 7.5" Spacing, C-Flex		25,738.00
	6631-31		
12301676S	22" 6 Gauge, 7.5" Spacing, C-Flex	8712	25,447.00
12301743S	22" 4 Gauge, 7.5" Spacing, C-Flex		26,747.00
	6631-33		
12301670S	22" 6 Gauge, 7.5" Spacing, C-Flex	9363	26,482.00
12301744S	22" 4 Gauge, 7.5" Spacing, C-Flex		27,982.00
	6631-36		
12301664S	22" 6 Gauge, 7.5" Spacing, C-Flex	10018	30,002.00
12301742S	22" 4 Gauge, 7.5" Spacing, C-Flex		31,802.00
	6631-35 Split Wing		
12301653S	22" 6 Gauge, 7.5" Spacing, C-Flex	9577	26,497.00
12301740S	22" 4 Gauge, 7.5" Spacing, C-Flex		28,297.00
	6631-40 Split Wing		
12301652S	22" 6 Gauge, 7.5" Spacing, C-Flex	10717	29,023.00
12301741S	22" 4 Gauge, 7.5" Spacing, C-Flex		31,023.00

6631 SERIES VERTICAL TILLAGE TOOL

ORDER CODE	DESCRIPTION	APPROX. WEIGHT (LBS)	LIST PRICE
Group 03 Tires			
	For 6631-21 & 6631-24		
5552YS	(1) New 11L x 15 (GY - FI) Load Range F Tubeless Tire . . . 8 Bolt Wheel (15" x 10")	85	449.00
	For 6631-27 through 6631-40		
5555YS	(1) New 12.5L, GY - FI, Load Range F Tire . . . . . 8 Bolt, 15 x 10 Wheel	104	518.00
16949YS	(1) New 380/55R-16.5 Tire, 8 Bolt, 16 x 12 Wheel	154	839.00

MODEL	CENTERS	ORDER QTY	WINGS	ORDER QTY
SF6631-21	5552YS	4	5552YS	2
SF6631-24	5552YS	4	5552YS	4
SF6631-27	5555YS	4	5555YS	4
SF6631-29	5555YS	4	5555YS	4
SF6631-31	16949YS	4	5555YS	4
SF6631-33	16949YS	4	5555YS	4
SF6631-35	16949YS	4	5555YS	4
SF6631-36	16949YS	4	5555YS	4
SF6631-40	16949YS	4	5555YS	4

Group 04 Lifts - Center (For Split Wing Only)			
7500542RS	Standard Lift Assembly for 35' (2-3/4" Spindle)	935	4,196.00
7500539RS	Standard Lift Assembly for 40' (2-3/4" Spindle)	1020	4,196.00
Group 05 Lifts - Wings (For Split Wing Only)			
7500538RS	Standard Wing Lift Assembly for 35' (2-1/4" Spindles)	660	2,231.00
7500548RS	Standard Wing Lift Assembly for 40' (2-1/4" Spindles)	660	2,541.00
Group 06 Hitches			
7921GS	Cast Single Lip Hitch, 1 7/8" hole Category III		160.00
7924GS	Hitch Clevis, 4" double 1 9/16" Hole		160.00
6933GS	Cast Single Lip Hitch, 2" Hole Category IV		160.00
7960GS	Hitch Clevis, 4" Double 1 7/8" Hole		160.00
16785GS	Cast Single Lip Hitch, 2 ¾" Hole Category V		240.00
Group 07 Levelers (Not Available for 35' or 40')			
2500193RS	Hydraulic Self Leveler Assembly 21' through 29'		1,482.00
2500192RS	Hydraulic Self Leveler Assembly 31' through 36'		2,963.00
(Note: Hydraulic Self Leveler Assembly is Standard on 35' and 40')			
Group 08 Shields (Enhances Material Flow in Adverse Field Conditions)			
19220BS	C-Flex Standard Shields for 6631-21	120	388.00
19219BS	C-Flex Standard Shields for 6631-24	132	414.00
19218BS	C-Flex Standard Shields for 6631-27	144	450.00
19217BS	C-Flex Standard Shields for 6631-29	156	492.00
19216BS	C-Flex Standard Shields for 6631-31	168	543.00
19215BS	C-Flex Standard Shields for 6631-33	180	570.00
19214BS	C-Flex Standard Shields for 6631-36	192	606.00
19213BS	C-Flex Standard Shields for 6631-35	204	647.00
19212BS	C-Flex Standard Shields for 6631-40	216	673.00

ORDER CODE	DESCRIPTION	APPROX. WEIGHT (LBS)	LIST PRICE

Group 09 Finishing Attachments

Flat Bar Reel - Overlapping Spiral Reels - 11" or 14" Diameters with Six Flat Carbon Blades, Tripled Lipped Sealed Bearings and Spring Loaded Parallel Mounting Arms

For 21'			
17001832RS	11" Diameter Flat Bar Reel	1470	7,195.00
17001856RS	11" Diameter Flat Bar Hydraulic Reel	1670	9,895.00
17001830RS	14" Diameter Flat Bar Reel	1660	7,505.00
17001857RS	14" Diameter Flat Bar Hydraulic Reel	1860	10,205.00
For 24'			
17001835RS	11" Diameter Flat Bar Reel	1675	8,199.00
17001859RS	11" Diameter Flat Bar Hydraulic Reel	1875	10,899.00
17001833RS	14" Diameter Flat Bar Reel	1910	8,572.00
17001860RS	14" Diameter Flat Bar Hydraulic Reel	2110	11,272.00
For 27'			
17001838RS	11" Diameter Flat Bar Reel	2130	9,224.00
17001862RS	11" Diameter Flat Bar Hydraulic Reel	2330	11,924.00
17001836RS	14" Diameter Flat Bar Reel	2380	9,643.00
17001863RS	14" Diameter Flat Bar Hydraulic Reel	2580	12,343.00
For 29'			
17001841RS	11" Diameter Flat Bar Reel	2205	9,576.00
17001865RS	11" Diameter Flat Bar Hydraulic Reel	2405	12,276.00
17001839RS	14" Diameter Flat Bar Reel	2475	10,358.00
17001866RS	14" Diameter Flat Bar Hydraulic Reel	2675	13,058.00
For 31'			
17001823RS	11" Diameter Flat Bar Reel	2230	9,835.00
17001868RS	11" Diameter Flat Bar Hydraulic Reel	2430	12,535.00
17001821RS	14" Diameter Flat Bar Reel	2490	10,611.00
17001869RS	14" Diameter Flat Bar Hydraulic Reel	2690	13,311.00
For 33'			
17001826RS	11" Diameter Flat Bar Reel	2395	10,094.00
17001871RS	11" Diameter Flat Bar Hydraulic Reel	2595	12,794.00
17001824RS	14" Diameter Flat Bar Reel	2655	10,871.00
17001872RS	14" Diameter Flat Bar Hydraulic Reel	2855	13,571.00
For 35'			
17001784RS	11" Diameter Flat Bar Reel	1756	10,094.00
17001782RS	14" Diameter Flat Bar Reel	2655	10,871.00
For 36'			
17001829RS	11" Diameter Flat Bar Reel	2370	10,457.00
17001874RS	11" Diameter Flat Bar Hydraulic Reel	2570	13,157.00
17001827RS	14" Diameter Flat Bar Reel	2670	11,232.00
17001875RS	14" Diameter Flat Bar Hydraulic Reel	2870	13,932.00
For 40'			
17001773RS	11" Diameter Flat Bar Reel	2370	10,457.00
17001771RS	14" Diameter Flat Bar Reel	2670	11,232.00

6631 SERIES VERTICAL TILLAGE TOOL

ORDER CODE	DESCRIPTION	APPROX. WEIGHT (LBS)	LIST PRICE
	Chevron Round Bar Reel - Overlapping Chevron Reel -14" Diameter with Ten Round Carbon Chevron Formed Rods, Tripled Lipped Sealed Bearings and Spring Loaded Parallel Mounting Arms		
17001831RS	14" Chevron Round Bar Reel for 21'	1775	8,023.00
17001858RS	14" Chevron Round Bar Hydraulic Reel for 21'	1975	10,723.00
17001834RS	14" Chevron Round Bar Reel for 24'	2040	9,168.00
17001861RS	14" Chevron Round Bar Hydraulic Reel for 24'	2240	11,868.00
17001837RS	14" Chevron Round Bar Reel for 27'	2525	10,314.00
17001864RS	14" Chevron Round Bar Hydraulic Reel for 27'	2725	13,014.00
17001840RS	14" Chevron Round Bar Reel for 29'	2635	11,079.00
17001867RS	14" Chevron Round Bar Hydraulic Reel for 29'	2835	13,779.00
17001822RS	14" Chevron Round Bar Reel for 31'	2650	10,871.00
17001870RS	14" Chevron Round Bar Hydraulic Reel for 31'	2850	13,571.00
17001825RS	14" Chevron Round Bar Reel for 33'	2830	11,078.00
17001873RS	14" Chevron Round Bar Hydraulic Reel for 33'	3030	13,778.00
17001828RS	14" Chevron Round Bar Reel for 36'	2850	11,388.00
17001876RS	14" Chevron Round Bar Hydraulic Reel for 36'	3050	14,088.00
17001783RS	14" Chevron Round Bar Reel for 35'	2264	11,078.00
17001772RS	14" Chevron Round Bar Reel for 40'	2413	11,388.00
	Three Row Spike Drag - Optional		
17001842RS	Three Row Spike Drag for 6631-21	1015	5,176.00
17001844RS	Three Row Spike Drag for 6631-24	1110	5,280.00
17001846RS	Three Row Spike Drag for 6631-27	1200	5,408.00
17001848RS	Three Row Spike Drag for 6631-29	1445	5,714.00
17001820RS	Three Row Spike Drag for 6631-31	1520	6,133.00
17001818RS	Three Row Spike Drag for 6631-33	1615	6,398.00
17001816RS	Three Row Spike Drag for 6631-36	1870	8,583.00
	Heavy Duty Three Row Coil Tine - Optional		
17001843RS	HD 3 Row Coil Tine for 6631-21	1305	7,343.00
17001845RS	HD 3 Row Coil Tine for 6631-24	1540	7,373.00
17001847RS	HD 3 Row Coil Tine for 6631-27	1705	7,782.00
17001849RS	HD 3 Row Coil Tine for 6631-29	2150	7,926.00
17001819RS	HD 3 Row Coil Tine for 6631-31	1850	9,539.00
17001817RS	HD 3 Row Coil Tine for 6631-33	2455	9,597.00
17001815RS	HD 3 Row Coil Tine for 6631-36	2555	11,746.00
17001735RS	HD 3 Row Coil Tine for 6631-35 Split-Wing	2895	11,806.00
17001736RS	HD 3 Row Coil Tine for 6631-40 Split-Wing	2903	12,756.00

6631 SERIES VERTICAL TILLAGE TOOL

ORDER CODE	DESCRIPTION	APPROX. WEIGHT (LBS)	LIST PRICE
CONVERSION KITS			
53024RS	Conversion Spring to Hydraulic Down Pressure Kit (6631-21)		2,700.00
53025RS	Conversion Spring to Hydraulic Down Pressure Kit (6631-24)		2,700.00
53026RS	Conversion Spring to Hydraulic Down Pressure Kit (6631-27)		2,700.00
53027RS	Conversion Spring to Hydraulic Down Pressure Kit (6631-29)		2,700.00
53028RS	Conversion Spring to Hydraulic Down Pressure Kit (6631-31)		2,700.00
53029RS	Conversion Spring to Hydraulic Down Pressure Kit (6631-33)		2,700.00
53030RS	Conversion Spring to Hydraulic Down Pressure Kit (6631-36)		2,700.00
53089RS	Conversion Spring to Hydraulic Down Pressure Kit (6631-35SW)		4,000.00
53090RS	Conversion Spring to Hydraulic Down Pressure Kit (6631-40SW)		4,000.00
Optional			
18663BS	Gang Wrench, 2-3/4"	35	89.00
19068RS	Hitch, Rear Tow Assembly for 21'-29' and 35' SW	350	1,039.00
19069RS	Hitch, Rear Tow Assembly for 31', 33;, 36' and 40' SW	350	1,039.00

6650 FIVE SECTION VERTICAL TILLAGE TOOL

F.O.B. Beloit, KS

STANDARD CONFIGURATION

22” x 6 ga Sunflower Saber™ Blades, 7½” blade spacing
18° Front and Rear Gang Angles
6 380/55 x 16.5 Tubeless Tire, Load Range F with 15” x 10” Eight Bolt Wheels and 2-3/4” Slip in Spindles (Centers)
8 12.5L x 15 12 Ply Tubeless Tires with 15” x 10” Six Bolt Wheels and 2” Slip in Spindles (Wings)
High Strength 1-3/4” Round Stress Proof Gang Shafts
Triple Sealed, Greaseable, Trunnion Style Gang Bearings
C-Flex Bearing Standards (1-1/4” x 2-1/2”)
4" wide Rigid Scraper Assemblies Mounted to C-Flex Standards
Maintenance Free Lift System with 5-1/2” Lift Axle on Center Section
1 CAT 5 Hitch 2” or 2-3/4” Pin
Rephasing Lift System with Single Point Depth Control
Twin Leveler System with Adjusting Hydraulic Cylinders
2 Walking Triples with Greaseable Tapered Roller Bearings (Center)
4 Walking Tandems with Greaseable Tapered Roller Bearings (Wings)
4 Heavy-duty Gauge Wheels with 20.5 x 8 -10 New Tires and Tubes, Five Bolt Hub and Triple Lip Seal
1 Adjustment Wrench
1 Tongue Jack
Safety Equipment Including: Light Kit, SMV Emblem and Safety Tow Chain
11” Diameter Flat Bar Finishing Reel with Six Carbon Blades

MODEL	TRANSPORT WIDTH	TRANSPORT HEIGHT	GANG SHAFTS	GANG STANDARDS FRONT/REAR	DISC BLADES FRONT/REAR	FRAME SIZE
6650-48	18'0"	13'5"	12	20/20	80/82	8.5'-10'-13'-10'-8.5'

These prices reflect the standard configuration. If items other than those listed in the standard configuration are ordered, then the quoted price below will change.

For Quotation Purposes Only – Please Order Items from the Groups on the Next Pages

MODEL NUMBER	CUTTING WIDTH	BLADE DIAMETER	BLADE THICKNESS *	EST. WT.	LIST PRICE
SF6650-48	47'11"	22"	6 GA	36,330	135,994.00

6650 SERIES VERTICAL TILLAGE TOOL

ORDER CODE	DESCRIPTION	APPROX. WEIGHT (lbs)	LIST PRICE

Select One Order Code from Each Group, 01 through 06.

Group 01 Base Machine

66504800	48' Five Section Vertical Tillage Tool		61,161.00

Group 02 Gangs Saber Blades, 8-1/2" Blade Spacing

12301711S	22" 6 GA, 7.5" Spacing, C-Flex with Trash Bars		38,722.00

Group 03 Center Lifts

7500549RS	Lift Assembly, Center, 2-3/4" Spindle, Walking Tandem		7,941.00

Group 04 Wing Lifts

7500550RS	Lift Assembly, Wings, 2" Spindle, Walking Tandem		4,949.00

Group 05 Tires (order Qty 8 for Wings and 6 for Center)

3588S	(1) New 12 Ply, 12.5L x 15 Tubeless Tire for Wings		367.00
16949YS	New 380/55R-16.5 Tubeless Tire, 8 Bolt Wheel	154	839.00

Group 06 Finishing Attachments

17001855RS	11" Diameter Flat Bar Finishing Reel Overlapping Spiral Reels 11" Diameter with Six Flat Carbon Blades, Tripled Lipped Sealed Bearings and Spring Loaded Parallel Mounting Arms		15,251.00
17001854RS	3 Row Coil Tine Finishing Harrow - Heavy Duty Spring Loaded Drag Arms with all Required Hardware and Mounting Brackets Three Rows of 1/2" x 22" Coil Tines on 12" Centers, 4" Spacing Overall, with Angle Adjustment and Backup Protection 13" Spacing Between Rows	3236	14,515.00

Dimensions: 3 Row Coil Tine Finishing Harrow	OUTER LEFT WING	INNER LEFT WING	CENTER	INNER RIGHT WING	OUTER RIGHT WING
	8'	10'	6' & 6'	10'	8'

OPTIONAL

19293BS	C-Flex Standard Shields (Enhances Material Flow in Adverse Field Conditions)		758.00
13767RS	Rear Tow Hitch with Hitch Slide and Ball Joint	199	1,008.00
2500182RS	Rear Tow Hitch Hydraulic Package	45	395.00
18663BS	Gang Wrench, 2 3/4"	20	89.00
12634PLS	Wiring Harness to Plug Soil Conditioner Lights into Implement Lights		223.00

6830 ROTARY FINISHER
F.O.B. Beloit, KS

STANDARD CONFIGURATION

8 Degree Positive Angle Disc Gang with Low Concavity, 19.69" x 1/4" Disc Blades with 7-1/2" Steel Spacer Spools
Spring Cushioned 11 in. dia. Flat Blade Disc Gang Reels with Sealed Bearings
Leveling Disc Gang with 20" x 7 ga. 2" Wide Wavy Coulter Blades (4)
Coulter Gang with 20" x 7 ga. 2" Wide Wavy Coulter Blades with 7-1/2" Steel Spacer Spools
2 Rotary Spider Tine Gangs with 18" x .197" Spiders with 2-1/2" Tine Offset with 7-1/2" Steel Spacer Spools
Hydraulic Depth Control of Rotary Spider Tine Gangs
C-Flex Bearing Standards with Trunnion Bearing Mounts
1-3/4" High Strength Round Stress Proof Disc and Wavy Coulter Blade Gang Shafts
1-1/2" High Strength Round Stress Proof Rotary Spider Tine Gang Shafts
1 Single Point Depth Control with Rephasing Lift System
4 Hydraulic Wing Fold Cylinders
Maintenance Free (UHMW) Frame Lift and Fold Systems
Safety Equipment Including: L.E.D. Transport Lighting, SMV Emblem and Safety Chain
1 Cast Single Lip Hitch with an 1-7/8" Oblong Hole Cat III (6830-21)
1 Cast Single Lip Hitch with an 2" Pin Oblong Hole Cat IV (6830-25, 6830-29NC, 6830-29WC)
1 Cast Single Lip Hitch with an 2-3/4" Pin Oblong Hole Cat V (6830-33 and 6830-36)

Models 6830-21 & 6830-25
Center Section - Walking Tandems with 4 New 12.5L (GY-FI-F) Tires
4 15" x 10" Eight Bolt Wheels and Hubs with 2-1/4" Spindles and Triple Lip Seals
Wings - Walking Tandems with 4 New 12.5L (GY-FI-F) Tires
4 15" x 10" Eight Bolt Wheels and Hubs with 2-1/4" Spindles and Triple Lip Seals

Models 6830-29NC, 6830-29WC, 6830-33 & 6830-36
Center Section - Walking Tandems with 4 New 380/55R Tires
4 16.5" x 10" Eight Bolt Wheels and Hubs with 2-3/4" Spindles and Triple Lip Seals on Center
Wings - Walking Tandems with 4 New 12.5L (GY-FI-F) Tires
4 15" x 10" Eight Bolt Wheels and Hubs with 2-1/4" Spindles and Triple Lip Seals on Center

Model	True Cutting Width ft. (m)	No. of Disc Blades	No. of Coulters	No. of RST	No. of C-Flex Bearing	Transport Width ft. (m)	Transport Height ft. (m)	Weight lbs. (kg)
6830-21	21.58 (6.58)	34	36	76	38	13.83 (4.22)	11.08 (3.38)	18,222 (8265.36)
6830-25	25.42 (7.75)	40	42	88	42	13.83 (4.22)	12.92 (3.94)	20,370 (9239.68)
6830-29NC	29.25 (8.92)	46	48	100	46	13.83 (4.22)	14.75 (4.50)	21,648 (9819.37)
6830-29WC	29.25 (8.92)	46	48	100	50	17.08 (5.21)	13.17 (4.01)	21,907 (9936.85)
6830-33	32.92 (10.03)	52	54	112	54	17.08 (5.21)	14.92 (4.55)	23,019 (10441.24)
6830-36	36.75 (11.20)	58	60	124	62	17.08 (5.21)	16.75 (5.11)	24,258 (11003.24)

These prices reflect the standard configuration. If items other than those listed in the standard configuration are ordered, then the quoted price below will change.

For Quotation Purposes Only – Please Order Items from the Groups on the Next Pages

MODEL NUMBER	CUTTING WIDTH	DISC BLADES	COULTERS	ROTARY	EST. WEIGHT	LIST PRICE
SF6830-21	21' 7"	19.69"	20"	18"	18222	74,388.00
SF6830-25	25' 5"	19.69"	20"	18"	20370	83,172.00
SF6830-29NC	29' 3"	19.69"	20"	18"	21648	88,822.00
SF6830-29WC	29' 3"	19.69"	20"	18"	21907	91,022.00
SF6830-33	32' 11"	19.69"	20"	18"	23019	98,702.00
SF6830-36	36' 9"	19.69"	20"	18"	24258	110,002.00

6830 SERIES ROTARY FINISHER

ORDER CODE	DESCRIPTION	APPROX. WEIGHT (lbs)	LIST PRICE
	Select One Order Code from Each Group, 01 through 08.		
Group 01 Base Machine			
68302100	SF6830-21 Rotary Finisher		38,100.00
68302500	SF6830-25 Rotary Finisher		41,100.00
68302900	SF6830-29NC Rotary Finisher		44,100.00
68302901	SF6830-29WC Rotary Finisher		45,100.00
68303300	SF6830-33 Rotary Finisher		49,600.00
68303600	SF6830-36 Rotary Finisher		56,100.00
Group 02 Leveling Gangs			
12301713S	6830-21 through 6830-29 Leveling Gang		1,250.00
12301720S	6830-29WC through 6830-36 Leveling Gang		1,300.00
Group 03 C-Flex Gangs			
12301730S	6830-21, 20" 4 GA, 7 1/2" Spacing with Rigid Scrapers		12,000.00
12301714S	6830-25, 20" 4 GA, 7 1/2" Spacing with Rigid Scrapers		14,150.00
12301716S	6830-29NC, 20" 4 GA, 7 1/2" Spacing with Rigid Scrapers		14,500.00
12301721S	6830-29WC, 20" 4 GA, 7 1/2" Spacing with Rigid Scrapers		14,600.00
12301724S	6830-33, 20" 4 GA, 7 1/2" Spacing with Rigid Scrapers		15,650.00
12301727S	6830-36, 20" 4 GA, 7 1/2" Spacing with Rigid Scrapers		17,150.00
Group 04 Spider Gangs			
12301731S	6830-21, 18" 6 GA, 7 1/2" Spacing		11,250.00
12301715S	6830-25, 18" 6 GA, 7 1/2" Spacing		13,700.00
12301718S	6830-29NC, 18" 6 GA, 7 1/2" Spacing		14,250.00
12301722S	6830-29WC, 18" 6 GA, 7 1/2" Spacing		14,850.00
12301725S	6830-33, 18" 6 GA, 7 1/2" Spacing		15,850.00
12301728S	6830-36, 18" 6 GA, 7 1/2" Spacing		18,050.00
Group 05 Wavy Gangs			
12301729S	6830-21, 20" 7 GA, 7 1/2" Spacing		6,500.00
12301712S	6830-25, 20" 7 GA, 7 1/2" Spacing		7,684.00
12301717S	6830-29NC, 20" 7 GA, 7 1/2" Spacing		8,150.00
12301719S	6830-29WC, 20" 7 GA, 7 1/2" Spacing		8,600.00
12301723S	6830-33, 20" 7 GA, 7 1/2" Spacing		9,650.00
12301726S	6830-36, 20" 7 GA, 7 1/2" Spacing		10,750.00
Group 06 Leveler			
2500201RS	Standard Self Leveler Assembly		984.00

6830 SERIES ROTARY FINISHER

ORDER CODE	DESCRIPTION	APPROX. WEIGHT (lbs)	LIST PRICE

Select One Order Code from Each Group, 01 through 08.

Group 07 Tires

5555YS	New 12.5L, GY - FI, Load Range F Tire, 8 Bolt Wheel, ...	104	518.00
16949YS	New 380/55R-16.5 Tubeless Tire, 8 Bolt Wheel	154	839.00

Model	Centers	Qty	Wings	Qty
6830-21	5555YS	4	5555YS	4
6830-25	5555YS	4	5555YS	4
6830-29NC	16949YS	4	5555YS	4
6830-29WC	16949YS	4	5555YS	4
6830-33	16949YS	4	5555YS	4
6830-36	16949YS	4	5555YS	4

Group 08 Hitches

7500552S	Cast Single Lip Hitch, 1 7/8" Hole Category III	160.00
7500553S	Hitch Clevis, 4" Double 1 9/16" Hole	160.00
7500554S	Cast Single Lip Hitch, 2" Hole Category IV	160.00
7500555S	Hitch Clevis, 4" Double 1 7/8" Hole	160.00
7500556S	Cast Single Lip Hitch, 2 3/4" Hole Category V	240.00

Group 09 Finishing Attachments

Flat Bar Reel - Overlapping Spiral Reels - 14" Diameter with Six Flat Carbon Blades, Tripled Lipped Sealed Bearings and Spring Loaded Parallel Mounting Arms

17001888RS	14" Flat Bar for 21'	7,505.00
17001886RS	14" Flat Bar for 25'	8,875.00
17001884RS	14" Flat Bar for 29NC	10,358.00
17001882RS	14" Flat Bar for 29WC	10,611.00
17001880RS	14" Flat Bar for 33'	10,871.00
17001878RS	14" Flat Bar for 36'	11,232.00
17001911S	14" Hydraulic Flat Bar for 21'	11,105.00
17001912S	14" Hydraulic Flat Bar for 25'	12,365.00
17001913S	14" Hydraulic Flat Bar for 29NC	12,505.00
17001914S	14" Hydraulic Flat Bar for 29WC	12,525.00
17001915S	14" Hydraulic Flat Bar for 33'	12,785.00
17001916S	14" Hydraulic Flat Bar for 36'	13,095.00

Chevron Round Bar Reel - Overlapping Chevron Reel -14" Diameter with Ten Round Carbon Chevron Formed Rods, Tripled Lipped Sealed Bearings and Spring Loaded Parallel Mounting Arms

17001887RS	14" Round Bar for 21'	8,023.00
17001885RS	14" Round Bar for 25'	9,575.00
17001883RS	14" Round Bar for 29NC	11,079.00
17001881RS	14" Round Bar for 29WC	10,871.00
17001879RS	14" Round Bar for 33'	11,078.00
17001877RS	14" Round Bar for 36'	11,388.00

6830 SERIES ROTARY FINISHER

ORDER CODE	DESCRIPTION	APPROX. WEIGHT (lbs)	LIST PRICE
Group 09 Finishing Attachments - Continued			
Chevron Round Bar Reel - Overlapping Chevron Reel -14" Diameter with Ten Round Carbon Chevron Formed Rods, Tripled Lipped Sealed Bearings and Spring Loaded Parallel Mounting Arms			
17001905S	14" Hydraulic Round Bar for 21'		11,145.00
17001906S	14" Hydraulic Round Bar for 25'		12,385.00
17001907S	14" Hydraulic Round Bar for 29NC		12,765.00
17001908S	14" Hydraulic Round Bar for 29WC		12,685.00
17001909S	14" Hydraulic Round Bar for 33'		12,945.00
17001910S	14" Hydraulic Round Bar for 36'		13,145.00
OPTIONAL			
18663BS	Gang Wrench, 2-3/4"	20	89.00
7500551RS	Gauge Wheel Option (Pair)		2,400.00

RESERVED

FACTORY OR DEALERSHIP ASSEMBLY AMOUNTS ON 7200 SERIES
(DISCOUNTS DO NOT APPLY)

The factory or dealership set-up amounts will be charged for machines set-up by Sunflower. Set-up amounts are the same whether machines are shipped via our truck (gangs off wings, etc.) or set-up completely and picked up by dealer's truck. Factory assembly charge includes hydraulic hose, hydraulic oil, and tips (hydraulic system is charged). Dealer location assembly charge includes hydraulic hose, and tips. (Hydraulic oil is not included) See note below.

MODEL NUMBER	FACTORY ORDER CODE	FACTORY SET-UP RATE	DEALER LOCATION ORDER CODE	DEALER LOCATION SET-UP RATE
SF7212-15	SET0167S	**474.00**	SET0167DS	**496.00**
SF7212-17	SET0168S	**474.00**	SET0168DS	**496.00**
SF7212-20	SET0169S	**474.00**	SET0169DS	**496.00**
SF7212-22	SET0170S	**474.00**	SET0170DS	**496.00**
SF7232-18	SET0171S	**890.00**	SET0171DS	**933.00**
SF7232-20	SET0172S	**890.00**	SET0172DS	**933.00**
SF7232-23	SET0173S	**890.00**	SET0173DS	**933.00**
SF7232-25	SET0174S	**890.00**	SET0174DS	**933.00**
SF7232-28	SET0175S	**890.00**	SET0175DS	**933.00**
SF7232-30	SET0176S	**890.00**	SET0176DS	**933.00**
SF7232-32	SET0179S	**998.00**	SET0179DS	**1,045.00**
SF7232-32NC	SET0177S	**998.00**	SET0177DS	**1,045.00**
SF7232-35	SET0180S	**998.00**	SET0180DS	**1,045.00**
SF7232-35NC	SET0178S	**998.00**	SET0178DS	**1,045.00**
SF7232-37	SET0181S	**998.00**	SET0181DS	**1,045.00**
SF7252-32	SET0182S	**1,307.00**	SET0182DS	**1,370.00**
SF7252-35	SET0183S	**1,307.00**	SET0183DS	**1,370.00**
SF7252-37	SET0184S	**1,307.00**	SET0184DS	**1,370.00**
SF7252-40	SET0185S	**1,413.00**	SET0185DS	**1,481.00**
SF7252-42	SET0186S	**1,413.00**	SET0186DS	**1,481.00**
SF7252-45	SET0187S	**1,413.00**	SET0187DS	**1,481.00**
SF7252-47	SET0189S	**1,516.00**	SET0189DS	**1,588.00**
SF7252-50	SET0190S	**1,516.00**	SET0190DS	**1,588.00**
SF7252-52	SET0191S	**1,620.00**	SET0191DS	**1,697.00**
SF7252-54	SET0192S	**1,620.00**	SET0192DS	**1,697.00**
SF7252-56	SET0193S	**1,620.00**	SET0193DS	**1,697.00**

SUNFLOWER RECOMMENDS THESE SET-UP FIGURES BE USED BY DEALERS WHEN TRANSFERRING EQUIPMENT

7600 Series Strip-Till Units are Factory Assembled - Including Optional Equipment such as Trail Hitch and Row Markers.

Dealership Assembly requirements:

1. The dealership assembly service must be ordered separately from the implement. (initiates scheduling of service) Please order dealership assembly service from the field installed options tab in e-ordering.
2. Include in the dealership assembly order request the order and/or invoice number of the implement to be assembled.
3. Dealer supplies hydraulic oil (oil is not included).
4. Dealer supplies a fork lift of sufficient size to be used by AGCO's assembly crew.

7200 SERIES SOIL CONDITIONER SPECIFICATIONS

MODEL NUMBER	CUTTING WIDTH	NUMBER OF SECTIONS	NUMBER & SIZE OF REELS	TRANSPORT WIDTH	TRANSPORT HEIGHT
SF7212-15	15’	1	3 – 60”	16’	N/A
SF7212-17 *	17’ 6”	1	1 – 60” & 2 – 75”	18’ 6”	N/A
SF7212-20 *	20’	1	1 – 60” & 2 – 90”	21’	N/A
SF7212-22 *	22’ 6”	1	1 – 60” & 2 – 105”	23’ 6”	N/A
SF7232-18	18’	3	5 – 45”	13’ 6”	8’ 10”
SF7232-20 **	20’ 6”	3	2 – 60” & 3 – 45”	13’ 6”	9’ 10”
SF7232-23 **	23’	3	2 – 75” & 3 – 45”	13’ 6”	10’ 10”
SF7232-25 **	25’ 6”	3	2 – 90” & 3 – 45”	13’ 6”	11’ 10”
SF7232-28	28’	3	1 – 45”, 2 – 60” & 2 – 90”	15’ 10”	11’ 10”
SF7232-30 **	30’ 6”	3	1 – 45”, 2 – 60” & 2 – 105”	15’ 10”	12’ 10”
SF7232-32(NC) *	32’ 6”	3	1 – 45” & 6 – 60”	16’ 4”	14’ 3”
SF7232-35(NC) *	35’	3	1 – 45”, 4 – 60” & 2 – 75”	16’ 4”	15’ 6”
SF7232-32 *	32’ 6”	3	2 – 45”, 4 – 60” & 1 – 75”	18’ 10”	12’ 9”
SF7232-35 *	35’	3	1 – 75” & 6 – 60”	18’ 10”	14’ 3”
SF7232-37 *	37’ 6”	3	3 – 75” & 4 – 60”	18’ 10”	15’ 6”
SF7252-32	32’ 6”	5	3 – 45”, 2 – 60” & 2 – 75”	17’ 4”	11’ 3”
SF7252-35 **	35’	5	1 – 45”, 4 – 60” & 2 – 75”	17’ 4”	11’ 3”
SF7252-37 ***	37’ 6”	5	1 – 45”, 2 – 60” & 4 – 75”	17’ 4”	11’ 3”
SF7252-40	40’	5	4 – 60”, 1 – 75” & 2 – 90”	19’ 10”	12’ 6”
SF7252-42 **	42’ 6”	5	2 – 60”, 3 – 75” & 2 – 90”	19’ 10”	12’ 6”
SF7252-45 ***	45’	5	2 – 60”, 1 – 75” & 4 – 90”	19’ 10”	12’ 6”
SF7252-47	47’ 6”	5	6 – 60” & 3 – 75”	19’ 10”	15’
SF7252-50 ***	50’	5	6 – 60”, & 1 – 75” & 2 – 90”	19’ 10”	15’
SF7252-52	52’	5	8 – 60” & 3 – 75”	19’ 10”	15’
SF7252-54 **	54’	5	10 – 60” & 1 – 75”	19’ 10”	15’
SF7252-56 ***	56’	5	8 – 60”, 3 – 75”	19’ 10”	15’

NC = Narrow Center
* Cutting width can be decreased as much as 15” on each end of the machine for a total of 30”
** Cutting width can be decreased as much as 6” on each end of the machine for a total of 12”
***Cutting width can be decreased as much as 12” on each end of the machine for a total of 24”

7200 SERIES SOIL CONDITIONER
F.O.B. Beloit, KS

STANDARD CONFIGURATION

2 New 8 Ply, 9.5L x 15 Tubeless Tires (15’ through 25’)
2 15" x 6" Six Bolt Wheels and Hubs with Zerk, 2" Spindles and Triple Lip Seals (15’ through 25’)
4 New 8 Ply, 9.5L x 15 tubeless tires (28’ through 56’)
4 15" x 6" Six Bolt Wheels and Hubs with Zerk, 2" Spindles and Triple Lip Seals (28’ through 56’)
Adjustable Telescoping Tongue with Clevis
Dropped Hitch with Spring Cushioned Leveler
17" Diameter Chevron Reels with Ten 7/8” Round Blades
C-Flex Cushion Reel Mounts with Trunnion Bearings
Maintenance Free Rockshaft Bearings
1 Tongue Jack
Warning Light Kit, SMV Emblem and Safety Chain
Adjustment Wrench

Some outer wing reels can slide in up to 15" per side to form a better match to implement width (see pg. 7000-2).

7200 SERIES SOIL CONDITIONER

These prices reflect the standard configuration. If items other than those listed in the standard configuration are ordered, then the quoted price below will change.

For Quotation Purposes Only – Please Order Items from the Groups on the Next Pages

MODEL NUMBER	CUTTING WIDTH	REEL SIZES	EST. WEIGHT	LIST PRICE
SINGLE SECTION SOIL CONDITIONERS				
SF7212-15	15’	60 – 60 – 60	2781	14,034.00
SF7212-17	17’ 6"	75 – 60 – 75	2927	14,409.00
SF7212-20	20’	90 – 60 – 90	3072	14,784.00
SF7212-22	22’ 6"	105 – 60 – 105	3224	15,427.00
THREE SECTION SOIL CONDITIONERS				
SF7232-18	18’	45 – 45 – 45 – 45 – 45	3890	19,781.00
SF7232-20	20’ 6"	60 – 45 – 45 – 45 – 60	4120	20,292.00
SF7232-23	23’	75 – 45 – 45 – 45 – 75	4264	21,011.00
SF7232-25	25’ 6"	90 – 45 – 45 – 45 – 90	4520	21,371.00
SF7232-28	28’	90 – 60 – 45 – 60 – 90	4930	23,187.00
SF7232-30	30’ 6"	105 – 60 – 45 – 60 – 105	5075	23,386.00
SF7232-32NC	32’ 6”	60 – 60 – 60 – 45 – 60 – 60 – 60	5945	26,472.00
SF7232-35NC	35’	60 – 75 – 60 – 45 – 60 – 75 – 60	6615	26,749.00
SF7232-32	32’ 6”	45 – 60 – 60 – 75 – 60 – 60 – 45	5945	26,639.00
SF7232-35	35’	60 – 60 – 60 – 75 – 60 – 60 – 60	6615	26,916.00
SF7232-37	37’ 6”	60 – 75 – 60 – 75 – 60 – 75 – 60	6920	27,583.00

These prices reflect the standard configuration. If items other than those above are ordered then the quoted price below will change.

For Quotation Purposes Only – Please Order Items from the Groups on the Next Pages

MODEL NUMBER	CUTTING WIDTH	REEL SIZES	EST. WEIGHT	LIST PRICE
7200 SERIES FIVE SECTION SOIL CONDITIONERS				
SF7252-32	32’ 6"	45 – 75 – 60 – 45 – 60 – 75 – 45	6220	29,151.00
SF7252-35	35’	60 – 75 – 60 – 45 – 60 – 75 – 60	6790	29,864.00
SF7252-37	37’ 6"	75 – 75 – 60 – 45 – 60 – 75 – 75	7170	30,239.00
SF7252-40	40’	60 – 90 – 60 – 75 – 60 – 90 – 60	7740	31,827.00
SF7252-42	42’ 6"	75 – 90 – 60 – 75 – 60 – 90 – 75	8120	32,111.00
SF7252-45	45’	90 – 90 – 60 – 75 – 60 – 90 – 90	8690	32,316.00
SF7252-47	47’ 6"	75 – 60 – 60 – 60 – 75 – 60 – 60 – 60 – 75	9140	34,955.00
SF7252-50	50’	90 – 60 – 60 – 60 – 75 – 60 – 60 – 60 – 90	9580	35,447.00
SF7252-52	52’	45 – 60 – 60 – 60 – 60 – 75 – 60 – 60 – 60 – 60 – 45	9672	44,677.00
SF7252-54	54’	60 – 60 – 60 – 60 – 60 – 75 – 60 – 60 – 60 – 60 – 60	9936	45,194.00
SF7252-56	56’	75 – 60 – 60 – 60 – 60 – 75 – 60 – 60 – 60 – 60 – 75	10192	45,644.00

7200 SERIES SOIL CONDITIONER

ORDER CODE	DESCRIPTION	APPROX. WEIGHT (LBS)	LIST PRICE

Select One Order Code from Each Group, 01 through 02.

Group 01 Base Machine

Single Section Soil Conditioners

SF7212-15	72120000, 15’ Cutting Width Soil Conditioner	1541	9,996.00
SF7212-17	72120000, 17’ 6" Cutting Width Soil Conditioner	1541	9,996.00
SF7212-20	72120000, 20’ Cutting Width Soil Conditioner	1541	9,996.00
SF7212-22	72120000, 22’ 6" Cutting Width Soil Conditioner	1541	9,996.00

Three Section Soil Conditioners

SF7232-18	72320000, 18’ Cutting Width Soil Conditioner	2410	15,909.00
SF7232-20	72320000, 20’ 6" Cutting Width Soil Conditioner	2410	15,909.00
SF7232-23	72320000, 23’ Cutting Width Soil Conditioner	2410	15,909.00
SF7232-25	72320000, 25’ 6" Cutting Width Soil Conditioner	2410	15,909.00
SF7232-28	72320001, 28’ Cutting Width Soil Conditioner	2340	17,705.00
SF7232-30	72320001, 30’ 6" Cutting Width Soil Conditioner	2340	17,705.00
SF7232-32NC	72320002, 32’ 6” Cutting Width Soil Conditioner	3780	19,893.00
SF7232-35NC	72320002, 35’ Cutting Width Soil Conditioner	3780	19,893.00
SF7232-32	72320003, 32’ 6” Cutting Width Soil Conditioner	3780	20,060.00
SF7232-35	72320003, 35’ Cutting Width Soil Conditioner	3780	20,060.00
SF7232-37	72320003, 37’ 6” Cutting Width Soil Conditioner	3780	20,060.00

Five Section Soil Conditioners

SF7252-32	72520000, 32’ 6” Cutting Width Soil Conditioner	4030	22,177.00
SF7252-35	72520000, 35’ Cutting Width Soil Conditioner	4030	22,177.00
SF7252-37	72520000, 37’ 6” Cutting Width Soil Conditioner	4030	22,177.00
SF7252-40	72520001, 40’ Cutting Width Soil Conditioner	4500	23,630.00
SF7252-42	72520001, 42’ 6" Cutting Width Soil Conditioner	4500	23,630.00
SF7252-45	72520001, 45’ Cutting Width Soil Conditioner	4500	23,630.00
SF7252-47	72520002, 47’ 6" Cutting Width Soil Conditioner	4500	25,811.00
SF7252-50	72520002, 50’ Cutting Width Soil Conditioner	4500	25,811.00
SF7252-52	72520003, 52’ Cutting Width Soil Conditioner	7230	29,122.00
SF7252-54	72520003, 54’ Cutting Width Soil Conditioner	7230	29,122.00
SF7252-56	72520003, 56’ Cutting Width Soil Conditioner	7230	29,122.00

7200 SERIES SOIL CONDITIONER

ORDER CODE	DESCRIPTION	APPROX. WEIGHT (LBS)	LIST PRICE

Select One Order Code from Each Group, 01 through 02.

Group 02 Reel Assembly 17" Diameter Chevron Reels with Ten 7/8" Round Blades

7500357RS	Reel Assembly for SF7212-15	1240	4,038.00
7500358RS	Reel Assembly for SF7212-17	1386	4,413.00
7500359RS	Reel Assembly for SF7212-20	1531	4,788.00
7500360RS	Reel Assembly for SF7212-22	1683	5,431.00
7500361RS	Reel Assembly for SF7232-18	1480	3,872.00
7500362RS	Reel Assembly for SF7232-20	1710	4,383.00
7500363RS	Reel Assembly for SF7232-23	1854	5,102.00
7500364RS	Reel Assembly for SF7232-25	2110	5,462.00
7500365RS	Reel Assembly for SF7232-28	2590	5,482.00
7500366RS	Reel Assembly for SF7232-30	2735	5,681.00
7500367RS	Reel Assembly for SF7232-32NC	2165	6,579.00
7500369RS	Reel Assembly for SF7232-35NC	2835	6,856.00
7500368RS	Reel Assembly for SF7232-32	2165	6,579.00
7500372RS	Reel Assembly for SF7232-35	2835	6,856.00
7500373RS	Reel Assembly for SF7232-37	3140	7,523.00
7500374RS	Reel Assembly for SF7252-32	2190	6,974.00
7500375RS	Reel Assembly for SF7252-35	2760	7,687.00
7500377RS	Reel Assembly for SF7252-37	3140	8,062.00
7500378RS	Reel Assembly for SF7252-40	3240	8,197.00
7500379RS	Reel Assembly for SF7252-42	3620	8,481.00
7500380RS	Reel Assembly for SF7252-45	5785	8,686.00
7500386RS	Reel Assembly for SF7252-47	6285	9,144.00
7500387RS	Reel Assembly for SF7252-50	6285	9,636.00
7500426RS	Reel Assembly for SF7252-52	4200	15,555.00
7500427RS	Reel Assembly for SF7252-54	4400	16,072.00
7500428RS	Reel Assembly for SF7252-56	4500	16,522.00

OPTIONAL EQUIPMENT - For Current Machines ONLY

12634PLS	Wiring Harness to Plug Soil Conditioner Lights into Implement Lights	223.00

7600 SERIES STRIP-TILL
F.O.B. Beloit, KS

STANDARD CONFIGURATION

ROW UNIT
7" x 7" (179 x 179 mm) Four Point Wrap-a-Round the Tool Bar Mounted Row Units
Parallel Linkage with 10" (254 mm) of Vertical Travel
(2) Adjustable Springs Down Pressure
24" x 1/4" (610 x .24 mm) Coulter Blade with Depth Band and Adjustable Scrapers (16393BS and 16719BS)
(2) 13" (330 mm) Tapered Spoke Wheel Row Cleaners (16708BS)
(2) 16" (406 mm) Eight Wave Berm Blades (16718BS)
Shear Bolt Protected NH3 Knife with Mole Point
12" x 12" (533 x 533 mm) Berm Reel with Adjustable Spring Down Pressure

TOOL BAR
3-Point Hitch - Cat III and IV
7610-20 - Eight Rows (30"), 7" x 7" Tool Bar
7630-30NT - Twelve Rows (30"), 7" x 7", 150 Folding Tool Bar (Narrow Transport)
7630-30 - Twelve Rows (30"), 7" x 7", 95 Folding Tool Bar (Accommodates Hydraulic Row Markers)
Folding Tool Bars: (2) 4" x 30" (102 x 762 mm) Hydraulic Fold Cylinders and Hoses
Warning Light Kit, Complete to Tractor
SMV Emblem
Rear Tow Hitch with Ball Joint and Parking Stand (18573RS)

OPTIONAL EQUIPMENT
8 Row Marker Set
12 Row Marker Set
2 Gauge Wheels and Mounting Kit (Includes (2) 9.5L x 15 8-ply Tires)
Dry 1 3/8" Fert Tube Kit
Liquid/NH3 Fert Tube Kit

These prices reflect the standard configuration. If items other than those above are ordered then the quoted price below will change.

For Quotation Purposes Only – Please Order Items from the Groups on the Next Pages

MODEL NUMBER	NUMBER OF ROWS	ROW SPACING	WORKING WIDTH	EST. WEIGHT	SHEAR BOLT ROW UNIT	SPRING TRIP ROW UNIT
SF7610-20	8	30"	20'	7250	45,807.00	53,015.00
SF7630-30NT	12	30"	30'	11700	75,428.00	86,240.00
SF7630-30	12	30"	30'	11700	75,425.00	86,240.00

7600 SERIES STRIP-TILL

ORDER CODE	DESCRIPTION	APPROX. WEIGHT (LBS)	LIST PRICE

Select One Order Code from Each Group, 01 through 07.

Group 01 Base Machine

SF7610-20	76102001, 7610 Strip-Till	1276	15,704.00
SF7630-30-150DEG	76303002, 7630 Strip-Till, Narrow Transport, 150 fold	4877	30,977.00
SF7630-30-95DEG	76303003, 7630 Strip-Till, 95 fold	4877	30,977.00

Group 02 Strip-Till Row Unit – Order 1 per Row

53053RS	Shear-Bolt Row Unit for 7600 Series	400	2,064.00
53041RS	Spring-Trip Row Unit for 7600 Series	490	2,965.00

Group 03 Coulter Blade – Order 1 per Row

16393BS	24" Coulter Blade with Depth Band	80	348.00
16720BS	22" Coulter Blade with Depth Band	78	337.00

Group 04 Row Cleaner – Order 1 per Row

16708BS	Row Cleaner	52	337.00
16721BS	Shark Tooth Wheel Row Cleaner		337.00

Group 05 Wavy Berm Blades Order 1 per Row

16718BS	16" Wavy Fluted Blades	128	794.00

Group 06 Coulter Blade and Depth Band Scrapers

16719BS	Scrapers	4	44.00

Group 07 Rear Tow Hitch / Jackstand

18573RS	Rear Tow Hitch with Ball Joint	352	1,407.00
18570RS	Rear Tow Hitch Slide and Ball Joint		1,596.00

OPTIONAL EQUIPMENT

2500179RS	8 Row Marker Set for 7610-20		4,180.00
2500180RS	12 Row Marker Set for 7630-30 (not available for 7630 NT)		4,291.00
18304RS	(2) Gauge Wheels, Mounting Kit and (2) 9.5L x 15 Tires		3,142.00
53050BS	Dry 1 3/8" Fert Tube Kit (Order One per Row)		50.00
53051BS	Liquid/NH3 Fert Tube Kit (Order One per Row)		30.00

Note: To order Row Units Only - Please order from group 2 through 7 and optional equipment, if desired.

For Row Unit Only Orders - (not to be Ordered with base machines)

18033PLS	Row Unit Shipping Stand (Order One per Row)	66	57.00
18305PLS	Plate, Serial No. - Individual Row Unit (1 per each Row Unit Sold)		No Charge

FACTORY OR DEALERSHIP ASSEMBLY AMOUNTS on 8000 SERIES
(DISCOUNTS DO NOT APPLY)

The factory or dealership set-up amounts will be charged for machines set-up by Sunflower. Set-up amounts are the same whether machines are shipped via our truck (gangs off wings, etc.) or set-up completely and picked up by dealer's truck. Factory assembly charge includes hydraulic hose, hydraulic oil, and tips (hydraulic system is charged). Dealer location assembly charge includes hydraulic hose, and tips. (Hydraulic oil is not included) See note below.

MODEL NUMBER	FACTORY ORDER CODE	FACTORY SET-UP RATE	DEALER LOCATION ORDER CODE	DEALER LOCATION SET-UP RATE
SF8210	SET0194S	**1,800.00**	SET0194DS	**1,885.00**

Dealership Assembly requirements:

1. The dealership assembly service must be ordered separately from the implement. (initiates scheduling of service) Please order dealership assembly service from the field installed options tab in e-ordering.
2. Include in the dealership assembly order request the order and/or invoice number of the implement to be assembled.
3. Dealer supplies hydraulic oil (oil is not included).
4. Dealer supplies a fork lift of sufficient size to be used by AGCO's assembly crew.

8210 SERIES RICHARDTON DUMP WAGON

F.O.B. New Hampton, IA

STANDARD CONFIGURATION

Single Axle Wagon with a Low Profile Box
Right Hand Dump with a 48° Dumping Angle
Variable Dump Height
27 x 32 Wheels on 8210 (Tires Not Included)
Swivel Type Single Lip Hitch
Warning Light Kit, SMV Emblem and Safety Chain

SPECIFICATIONS	SF8210-900
Length of Box	15’
Capacity with Roof	N/A
Capacity without Roof	900 cubic feet
Rated Load Capacity	40,000 lbs.
Variable Dump Height (Min.-Max.)	9’ 6” – 15’
Ground Clearance	16”
Loading Height	11’
Tread Width	120”
Lift Cylinders	4” x 72”
Dump Cylinders	5” x 72”
Recommended Hydraulic Fluid Flow	25.7 GPM
Dump Cycle	1 minute

Above Specifications May Vary Slightly Based on Tires, Hydraulic System, or Other Possible Variables.

These prices reflect the standard configuration. If items other than those listed in the standard configuration are ordered, then the quoted price below will change.

For Quotation Purposes Only – Please Order Items from the Groups on the Next Pages

MODEL NUMBER	DESCRIPTION	EST. WT.	LIST PRICE
SF8210-900	Single Axle, Multi-Purpose Dump Wagon	12570	66,789.00

8210 SERIES RICHARDTON DUMP WAGON

ORDER CODE	DESCRIPTION	APPROX. WEIGHT (LBS)	LIST PRICE

Select One Order Code from Each Group, 01 through 03.

Group 01 Base Machine

SF8210-900	82109000, Single Axle, Multi-Purpose Dump Wagon	12350	62,592.00

Group 02 Tires and Wheels

RT555-014S	27 x 32 Wheels, No Tires (Order Qty 2)	290	694.00
RT555-010S	21 x 32 Wheels, No Tires (Order Qty 2)	290	694.00
10721YS	Set of New 30.5 x 32 R1 12 Ply Tires on 27 x 32 Wheels . . . (Order Qty 1)		7,563.00
10720YS	Set of New 24.5 x 32 R1 12 Ply Tires on 21 x 32 Wheels . . . (Order Qty 1)		6,889.00

Group 03 Hitches

For SF8010

10612S	Swivel Type Single Lip Hitch	220	2,809.00
10613S	Swivel Type Double Lip Hitch.	230	2,809.00

OPTIONAL EQUIPMENT

10617S	18” Dumping Lip Extension	167	1,249.00
10618S	18” Wall Extension with Dumping Lip Extension . . . . . (adds approximately 100 bushels to the holding capacity of the wagon)	309	2,400.00
12841RS	18” Peanut Lip Extension with Catch Tray	336	2,767.00
16028RS	Flare Extension Kit . . . . . (Reduces End-Plate Spillage) (Use with (10617S) Dumping Lip Extension but in Lieu of (16028RS) Flare Extension Kit)	375	4,408.00

RESERVED

DEALERSHIP ASSEMBLY AMOUNTS ON 9000 SERIES

(DISCOUNTS DO NOT APPLY)

The factory or dealership set-up amounts will be charged for machines set-up by Sunflower. Set-up amounts are the same whether machines are shipped via our truck (gangs off wings, etc.) or set-up completely and picked up by dealer's truck. Factory assembly charge includes hydraulic hose, hydraulic oil, and tips (hydraulic system is charged). Dealer location assembly charge includes hydraulic hose, and tips. (Hydraulic oil is not included) See note below.

MODEL NUMBER	DEALER LOCATION ORDER CODE	DEALER LOCATION SET-UP RATE
SF9312-07*	SET0296DS	250.00
SF9312-10*	SET0297DS	275.00
SF9312-15*	SET0298DS	330.00
SF9412-10*	SET0299DS	275.00
SF9412-12*	SET0300DS	300.00
SF9413-15*	SET0301DS	330.00
SF9413-20*	SET0302DS	350.00
SF9510-15*	SET0303DS	330.00
SF9510-20*	SET0304DS	350.00
SF9421-20*	SET0305DS	350.00
SF9421-25*	SET0306DS	425.00
SF9421-30*	SET0307DS	450.00
SF9435-30*	SET0308DS	450.00
SF9435-40*	SET0309DS	525.00
SF9531-30*	SET0310DS	450.00
SF9531-40*	SET0311DS	525.00
SF9610-15*	SET0312DS	330.00
SF9610-20*	SET0313DS	350.00
SF9730-40	SET0314DS	2,000.00
SF9750-50	SET0315DS	2,400.00
SF9750-60	SET0316DS	2,500.00
SF9830NT	SET0317DS	1,300.00
SF9830-30	SET0318DS	1,900.00
SF9830-40	SET0319DS	1,900.00
SF9850-50	SET0320DS	2,000.00
SF9850-60	SET0321DS	2,200.00
SF9920-280	SET0322DS	700.00
SF9920-335	SET0323DS	700.00
SF9930-380	SET0324DS	800.00
SF9930-525	SET0325DS	800.00
* Install Press Wheels		

9312 SERIES SUNFLOWER PULL TYPE END WHEEL GRAIN DRILL

(PASTURE DRILL)

F.O.B. Beloit, KS

STANDARD CONFIGURATION

7-1/2" or 10" Row Spacing
Walk Boards
Staggered Double Disc Openers with 15" Smooth Blades
Sight Glasses (2 per Box)
Floating Drives with 8 Ply, 9.5L x 15 Tires
50 Drive Chain
Hydraulic Cylinders with Hoses
Cut Steel Sprockets
2.4 Bushel per Foot Boxes
Six Internal Fluted Meters
(2) 12 Ply, 9.5L x 15 Tires
Heavy-duty Bearings
Chain Idlers
Heavy-duty Down Pressure Springs
Acremeter
Warning Light Kit
SMV Emblem

All purpose openers with parallel links, adjustable for no-till, min-till and conventional seeding.
Choice of press wheels: 2” x 13” Smooth Crown, 3" x 13" Center Rib, 3" x 13" Double Rib or 4" x 12" Double Rib Press Wheels

These prices reflect the standard configuration. If items other than those listed in the standard configuration are ordered, then the quoted price below will change.

For Quotation Purposes Only – Please Order Items from the Groups on the Next Pages

MODEL NUMBER	DRILL WIDTH	HOPPER SIZE (#)	ROW SPACING	NUMBER OF OPENERS	ESTIMATED WEIGHT	LIST PRICE
SF9312-07	7 ½’	7½’ (1)	7½”	12	3859	28,086.00
SF9312-07	7 ½’	7½’ (1)	10”	9	3481	25,188.00
SF9312-10	10’	10’ (1)	7½”	16	4840	33,744.00
SF9312-10	10’	10’ (1)	10”	12	4290	29,867.00
SF9312-15	15’	7½’ (2)	7½”	24	7222	45,029.00
SF9312-15	15’	7½’ (2)	10”	18	6406	39,213.00

9312 SERIES SUNFLOWER PULL TYPE END WHEEL GRAIN DRILL

ORDER CODE	DESCRIPTION	APPROX. WEIGHT (LBS)	LIST PRICE

Select One Order Code from Each Group, 01 through 03.

Group 01 Base Machine PT End Wheel Grain Drill

SF9312-07-75INCH	93120700, 7½" Spacing.	2209	17,378.00
SF9312-07-10INCH	93120701, 10" Spacing.	2209	17,156.00
SF9312-10-75INCH	93121000, 7½" Spacing.	2640	19,467.00
SF9312-10-10INCH	93121001, 10" Spacing.	2640	19,159.00
SF9312-15-75INCH	93121500, 7½" Spacing.	3922	23,614.00
SF9312-15-10INCH	93121501, 10" Spacing.	3922	23,153.00

Group 02 Openers 15" Smooth Blade

(All Purpose with Parallel Links, Adjustable for No-Till, Min-Till & Conventional Seeding)

For SF9312-07

18000161S	12 Staggered Double Disc Openers, 7½" Spacing	1530	9,796.00
18000162S	9 Staggered Double Disc Openers, 10" Spacing	1152	7,348.00

For SF9312-10

18000144S	16 Staggered Double Disc Openers, 7½" Spacing	2040	13,061.00
18000146S	12 Staggered Double Disc Openers, 10" Spacing	1530	9,796.00

For SF9312-15

18000148S	24 Staggered Double Disc Openers, 7½" Spacing	3060	19,591.00
18000150S	18 Staggered Double Disc Openers, 10" Spacing	2304	14,692.00

Group 03 Press Wheels Order 1 per Opener

7500341BS	2" x 13" Smooth Crown	10	76.00
7500343BS	3" x 13" Center Rib	10	76.00
7500344BS	3" x 13" Double Rib	10	76.00
7500340BS	4" x 12" Double Rib	10	76.00

9312 SERIES SUNFLOWER PULL TYPE END WHEEL GRAIN DRILL

ORDER CODE	DESCRIPTION	APPROX. WEIGHT (LBS)	LIST PRICE

OPTIONAL EQUIPMENT - For Current Machines ONLY

Legume / Grass Seed Box – Order Box plus ONE Attachment, either 7½" or 10" spacing

For SF9312-07

7500165RS	Legume / Grass Seed Box for SF9312-07	123	3,347.00
18000045S	Attachment for 7½" Spacing	42	936.00
18000047S	Attachment for 10" Spacing	31	763.00

For SF9312-10

7500166RS	Legume / Grass Seed Box for SF9312-10	163	3,586.00
18000048S	Attachment for 7½" Spacing	56	1,232.00
18000050S	Attachment for 10" Spacing	42	1,009.00

For SF9312-15

7500167RS	Legume / Grass Seed Box for SF9312-15	245	4,785.00
18000051S	Attachment for 7½" Spacing	84	1,831.00
18000053S	Attachment for 10" Spacing	63	1,483.00

Opener Shields

18254BS	Opener Shield for SF9312-07	61	232.00
18255BS	Opener Shield for SF9312-10	81	278.00
18257BS	Opener Shield for SF9312-15	123	461.00

Seed Cup Dividers (Tents) **(Order Number of Openers Minus 1 Per Hopper)**

12397YDS	Seed Cup Dividers, 7½" Spacing	1	6.00
12398YDS	Seed Cup Dividers, 10" Spacing	1	8.00

Weight Brackets (Pair)

7500162RS	Weight Brackets for SF9312-07	90	424.00
7500163RS	Weight Brackets for SF9312-10	90	424.00
7500164RS	Weight Brackets for SF9312-15	90	424.00

Miscellaneous

2500097RS	Hydraulic Row Markers for SF9312-15	495	3,570.00
204-134S	Alfalfa Reducer ORDER ONE PER ROW		6.00
DR12017S	Seed Cup Plug (Order One Per Two Rows - Recommended)	1	1.00

9412 SERIES SUNFLOWER 3-POINT GRAIN DRILL
F.O.B. Beloit, KS

STANDARD CONFIGURATION

7-1/2", 10"
Double Disc Openers with 15" Smooth Blades
Heavy-duty Down Pressure Springs
Floating Drives with 8 Ply, 9.5L x 15 Tires
50 Drive Chain
2.4 Bushel per Foot Low Profile Boxes (10')
3.0 Bushel per Foot Low Profile Boxes (12.5')
Acremeter
Hex Jack Shafts
Walk Boards
Sight Glasses (2 per Box)
Chain Idlers
Quick Change Cut Steel Hex Sprockets
Six Internal Fluted Meters
Heavy-duty Bearings
Warning Light Kit
SMV Emblem

All purpose openers with parallel links, adjustable for no-till, min-till and conventional seeding.
Choice of press wheels:
2" x 13" Smooth Crown, 3" x 13" Center Rib, 3" x 13" Double Rib or 4" x 12" Double Rib Press Wheels

These prices reflect the standard configuration. If items other than those listed in the standard configuration are ordered, then the quoted price below will change.

For Quotation Purposes Only – Please Order Items from the Groups on the Next Pages

MODEL NUMBER	DRILL WIDTH	HOPPER SIZE (#)	ROW SPACING	NUMBER OF OPENERS	ESTIMATED WEIGHT	LIST PRICE
SF9412-10	10'	10' (1)	7½"	16	3876	29,934.00
SF9412-10	10'	10' (1)	10"	12	3326	25,532.00
SF9412-12	12½'	12½' (1)	7½"	20	5110	36,878.00
SF9412-12	12½'	12½' (1)	10"	15	4423	31,348.00

9412 SERIES SUNFLOWER 3-POINT GRAIN DRILL

ORDER CODE	DESCRIPTION	APPROX. WEIGHT (LBS)	LIST PRICE
	Select One Order Code from Each Group, 01 through 03.		
	Group 01 Base Machine 3-Point Grain Drill		
SF9412-10-75INCH	94121000, 7½" Spacing	1676	15,657.00
SF9412-10-10INCH	94121002, 10" Spacing	1676	14,824.00
SF9412-12-75INCH	94121200, 7½" Spacing	2360	19,033.00
SF9412-12-10INCH	94121201, 10" Spacing	2360	17,962.00
	Group 02 Openers 15" Smooth Blade		
	(All Purpose with Parallel Links, Adjustable for No-Till, Min-Till & Conventional Seeding)		
	For SF9412-10		
18000144S	16 Staggered Double Disc Openers, 7½" Spacing	2040	13,061.00
18000146S	12 Staggered Double Disc Openers, 10" Spacing	1530	9,796.00
	For SF9412-12		
18000147S	20 Staggered Double Disc Openers, 7½" Spacing	2550	16,325.00
18000145S	15 Staggered Double Disc Openers, 10" Spacing	1913	12,246.00
	Group 03 Press Wheels Order 1 per Opener		
7500341BS	2" x 13" Smooth Crown	10	76.00
7500343BS	3" x 13" Center Rib	10	76.00
7500344BS	3" x 13" Double Rib	10	76.00
7500340BS	4" x 12" Double Rib	10	76.00

9412 SERIES SUNFLOWER 3-POINT GRAIN DRILL

ORDER CODE	DESCRIPTION	APPROX. WEIGHT (LBS)	LIST PRICE
OPTIONAL EQUIPMENT - For Current Machines ONLY			
Legume / Grass Seed Box – Order Box plus ONE Attachment, either 7½" or 10" spacing			
For SF9412-10			
7500288RS	Legume / Grass Seed Box for SF9412-10	163	3,668.00
18000048S	Attachment for 7½" Spacing	56	1,232.00
18000050S	Attachment for 10" Spacing	42	1,009.00
For SF9412-12			
7500347RS	Legume / Grass Seed Box for SF9412-12	244	4,200.00
18000149S	Attachment for 7½" Spacing	56	1,701.00
18000152S	Attachment for 10" Spacing	42	1,664.00
Opener Shields			
18255BS	Opener Shield for SF9412-10	81	278.00
18256BS	Opener Shield for SF9412-12	102	401.00
Seed Cup Dividers (Tents) (Order Number of Openers Minus 1 Per Hopper)			
12397YDS	Seed Cup Dividers, 7½" Spacing	1	6.00
12398YDS	Seed Cup Dividers, 10" Spacing	1	8.00
Hydraulic Row Markers			
2500092RS	Hydraulic Row Markers SF9412-12	500	4,215.00
Transport Pull Hitches			
2500138S	Transport Pull Hitch for SF9412-10	1650	7,274.00
2500136S	Transport Pull Hitch for SF9412-12	1650	7,570.00
Weight Brackets (Pair)			
7500163RS	Weight Brackets for SF9412-10	90	424.00
7500179RS	Weight Brackets for SF9412-12	90	631.00
Miscellaneous			
204-134S	Alfalfa Reducer ORDER ONE PER ROW		6.00
DR12017S	Seed Cup Plug (Order One Per Two Rows - Recommended)	1	1.00

9413 SERIES SUNFLOWER 3-POINT GRAIN DRILL
F.O.B. Beloit, KS

STANDARD CONFIGURATION

7-1/2" or 10" Row Spacing
Double Disc "Heads Up Openers" with 15" Smooth Blades
Heavy-duty Down Pressure Springs
Floating Drives with 8 Ply, 9.5L x 15 Tires
50 Drive Chain with Spring Loaded Idlers
3.75 Bushel per Foot Boxes
Acremeter
Walk Boards
Sight Glasses (2 per Box)
Internal Fluted (6 Flutes) Seed Meters
Seed Cup Dividers (Tents)
Hex Jack Shafts with Quick Change Sprockets
SMV Emblem
Warning Light Kit

All purpose openers with parallel links are adjustable for no-till, min-till and conventional seeding.
Choice of press wheels: 2” x 13” Smooth Crown, 3" x 13" Center Rib, 3" x 13" Double Rib or 4" x 12" Double Rib

These prices reflect the standard configuration. If items other than those listed in the standard configuration are ordered, then the quoted price below will change.

For Quotation Purposes Only – Please Order Items from the Groups on the Next Pages

MODEL NUMBER	DRILL WIDTH	HOPPER SIZE (#)	ROW SPACING	NUMBER OF OPENERS	ESTIMATED WEIGHT	LIST PRICE
SF9413-15	15’	7½’ (2)	7½”	24	6219	41,796.00
SF9413-15	15’	7½’ (2)	10”	18	5403	35,188.00
SF9413-20	20’	10’ (2)	7½”	32	8063	55,286.00
SF9413-20	20’	10’ (2)	10”	24	6963	46,651.00

9413 SERIES SUNFLOWER 3-POINT GRAIN DRILL

ORDER CODE	DESCRIPTION	APPROX. WEIGHT (LBS)	LIST PRICE
	Select One Order Code from Each Group, 01 through 03.		
	Group 01 Base Machine 3-Point Grain Drill		
SF9413-15	94131500, 7½" Spacing	2919	20,381.00
SF9413-15	94131501, 10" Spacing	2919	19,128.00
SF9413-20	94132000, 7½" Spacing	3663	26,732.00
SF9413-20	94132001, 10" Spacing	3663	25,236.00
	Group 02 Openers 15" Smooth Blade		
	(All Purpose with Parallel Links, Adjustable for No-Till, Min-Till & Conventional Seeding)		
	For SF9413-15		
18000206S	24 Staggered Double Disc Openers, 7½" Spacing	3060	19,591.00
18000207S	18 Staggered Double Disc Openers, 10" Spacing	2304	14,692.00
	For SF9413-20		
18000208S	32 Staggered Double Disc Openers, 7½" Spacing	4080	26,112.00
18000209S	24 Staggered Double Disc Openers, 10" Spacing	3060	19,591.00
	Group 03 Press Wheels Order 1 per Opener		
7500341BS	2" x 13" Smooth Crown	10	76.00
7500343BS	3" x 13" Center Rib	10	76.00
7500344BS	3" x 13" Double Rib	10	76.00
7500340BS	4" x 12" Double Rib	10	76.00

9413 SERIES SUNFLOWER 3-POINT GRAIN DRILL

ORDER CODE	DESCRIPTION	APPROX. WEIGHT (LBS)	LIST PRICE
OPTIONAL EQUIPMENT - For Current Machines ONLY			
Legume / Grass Seed Box – Order Box plus ONE Attachment, either 7½" or 10" spacing			
For SF9413-15			
7500482RS	Legume / Grass Seed Box for SF9413-15	245	4,880.00
18000194S	Mounting Hardware for 7½" Spacing	84	1,831.00
18000195S	Mounting Hardware for 10" Spacing	63	1,483.00
For SF9413-20			
7500483RS	Legume / Grass Seed Box for SF9413-20	326	5,930.00
18000196S	Mounting Hardware for 7½" Spacing	112	2,420.00
18000197S	Mounting Hardware for 10" Spacing	84	1,967.00
Opener Shields			
18257BS	Opener Shield for SF9413-15	123	461.00
18258BS	Opener Shield for SF9413-20	164	534.00
Hydraulic Row Markers			
2500174RS	Hydraulic Row Markers SF9413-15	500	4,215.00
2500176RS	Hydraulic Row Markers SF9413-20	525	4,230.00
Transport Pull Hitches			
2500100S	Transport Pull Hitch for SF9413-15 and SF9413-20	1850	8,148.00
Weight Brackets (Pair)			
7500479RS	Weight Brackets for SF9413-15 and -20	90	631.00
Miscellaneous			
204-134S	Alfalfa Reducer ORDER ONE PER ROW		6.00
DR12017S	Seed Cup Plug (Order One Per Two Rows - Recommended)		1.00

9510 SERIES SUNFLOWER FERTILIZER GRAIN DRILL

F.O.B. Beloit, KS

STANDARD CONFIGURATION

7-1/2" or 10" Row Spacing
Double Disc "Heads Up Openers" with 15" Smooth Blades
Heavy-duty Down Pressure Springs
Floating Drives with 8 Ply, 9.5L x 15 Tires
50 Drive Chain with Spring Loaded Idlers
3.75 Bushel per Foot Total Capacity
Hopper Capacity : 2.4 Bushel per Foot (Seed)
and 120 lb per Foot (Dry Fertilizer)
Acremeter
Walk Boards
Sight Glasses (2 per Box)
Internal Fluted (6 Flutes) Seed Meters
Seed Cup Dividers (Tents)
External Fluted Meter (Fertilizer)
Hex Jack Shafts, with Quick Change Sprockets
SMV Emblem
Warning Light Kit

All purpose openers with parallel links are adjustable for no-till, min-till and conventional seeding.
Choice of press wheels: 2” x 13” Smooth Crown, 3" x 13" Center Rib, 3" x 13" Double Rib or 4" x 12" Double Rib

These prices reflect the standard configuration. If items other than those listed in the standard configuration are ordered, then the quoted price below will change.

For Quotation Purposes Only – Please Order Items from the Groups on the Next Pages

MODEL NUMBER	DRILL WIDTH	HOPPER SIZE (#)	ROW SPACING	NUMBER OF OPENERS	ESTIMATED WEIGHT	LIST PRICE
SF9510-15	15’	7½’ (2)	7½”	24	6630	46,409.00
SF9510-15	15’	7½’ (2)	10”	18	5418	39,158.00
SF9510-20	20’	10’ (2)	7½”	32	8652	60,579.00
SF9510-20	20’	10’ (2)	10”	24	7552	50,937.00

9510 SERIES SUNFLOWER FERTILIZER GRAIN DRILL

ORDER CODE	DESCRIPTION	APPROX. WEIGHT (LBS)	LIST PRICE

Select One Order Code from Each Group, 01 through 03.

Group 01 Base Machine 3-Point Grain Drill

SF9510-15	95101500, 7½" Spacing	3330	24,994.00
SF9510-15	95101501, 10" Spacing	3330	23,098.00
SF9510-20	95102000, 7½" Spacing	4252	32,025.00
SF9510-20	95102001, 10" Spacing	4252	29,522.00

Group 02 Openers 15" Smooth Blade

(All Purpose with Parallel Links, Adjustable for No-Till, Min-Till & Conventional Seeding)

For SF9510-15

18000206S	24 Staggered Double Disc Openers, 7½" Spacing	3060	19,591.00
18000207S	18 Staggered Double Disc Openers, 10" Spacing	2304	14,692.00

For SF9510-20

18000208S	32 Staggered Double Disc Openers, 7½" Spacing	4080	26,122.00
18000209S	24 Staggered Double Disc Openers, 10" Spacing	3060	19,591.00

Group 03 Press Wheels Order 1 per Opener

7500341BS	2" x 13" Smooth Crown	10	76.00
7500343BS	3" x 13" Center Rib	10	76.00
7500344BS	3" x 13" Double Rib	10	76.00
7500340BS	4" x 12" Double Rib	10	76.00

9510 SERIES SUNFLOWER FERTILIZER GRAIN DRILL

ORDER CODE	DESCRIPTION	APPROX. WEIGHT (LBS)	LIST PRICE
OPTIONAL EQUIPMENT - For Current Machines ONLY			
Legume / Grass Seed Box – Order Box plus ONE Attachment, either 7½" or 10" spacing			
For SF9510-15			
7500489RS	Legume / Grass Seed Box for SF9510-15	245	4,880.00
18000198S	Attachment for 7½" Spacing		1,831.00
18000199S	Attachment for 10" Spacing		1,483.00
For SF9510-20			
7500490RS	Legume / Grass Seed Box for SF9510-20	326	5,930.00
18000200S	Attachment for 7½" Spacing		2,420.00
18000201S	Attachment for 10" Spacing		1,967.00
Opener Shields			
18257BS	Opener Shield for SF9510-15	123	461.00
18258BS	Opener Shield for SF9510-20	164	534.00
Hydraulic Row Markers			
2500174RS	Hydraulic Row Markers SF9510-15	500	4,215.00
2500176RS	Hydraulic Row Markers SF9510-20	525	4,230.00
Transport Pull Hitches			
2500100S	Transport Pull Hitch for SF9510-15 and SF9510-20	1850	8,148.00
Weight Brackets (Pair)			
7500479RS	Weight Brackets for SF9510-15 and -20	90	631.00
Miscellaneous			
204-134S	Alfalfa Reducer ORDER ONE PER ROW		6.00
DR12017S	Seed Cup Plug (Order One Per Two Rows - Recommended)		1.00

9421 SERIES SUNFLOWER TWO SECTION FOLDING GRAIN DRILL

F.O.B. Beloit, KS

STANDARD CONFIGURATION

7-1/2" or 10" Row Spacing
Walk Boards
Double Disc Openers with 15" Smooth Blades
Sight Glasses (2 per Box)
Single Lip Hitch with 2” Pin Hole
Chain Idlers
Floating Drives with (2) 8 Ply, 9.5L x 15 Tires
Quick Change Cut Steel Hex Sprockets
Hydraulic Cylinders with Hoses
Internal Fluted Meter
3.0 Bushel per Foot Boxes
Heavy-duty 205 Bearings
50 Drive Chain
Heavy-duty Down Pressure Springs
(4) 12 Ply, 11L x 15 and (4) 8 Ply, 9.5L x 15 Tires
Warning Light Kit
Hex Jack Shafts
Acremeter
SMV Emblem

All purpose openers with parallel links, adjustable for no-till, min-till and conventional seeding.
Choice of Press Wheels:
2" x 13" Smooth Crown, 3" x 13" Center Rib, 3" x 13" Double Rib or 4" x 12" Double Rib

These prices reflect the standard configuration. If items other than those listed in the standard configuration are ordered, then the quoted price below will change.

For Quotation Purposes Only – Please Order Items from the Groups on the Next Pages

MODEL NUMBER	DRILL WIDTH	HOPPER SIZE (#)	ROW SPACING	NUMBER OF OPENERS	ESTIMATED WEIGHT	LIST PRICE
SF9421-20	20’	10’ (2)	7½”	32	11300	76,959.00
SF9421-20	20’	10’ (2)	10”	24	10200	68,964.00
SF9421-25	25’	12½’ (2)	7½”	40	14041	91,653.00
SF9421-25	25’	12½ (2)	10”	30	12666	81,195.00
SF9421-30	30’	7½’ (4)	7½”	48	17479	105,202.00
SF9421-30	30’	7½’ (4)	10”	36	15829	92,661.00

9421 SERIES SUNFLOWER TWO SECTION FOLDING GRAIN DRILL

ORDER CODE	DESCRIPTION	APPROX. WEIGHT (LBS)	LIST PRICE

Select One Order Code from Each Group, 01 through 03.

Group 01 Base Machine 2- Section Folding Grain Drill

SF9421-20-75INCH	94212000, 7½" Spacing	6900	48,405.00
SF9421-20-10INCH	94212001, 10" Spacing	6900	47,549.00
SF9421-25-75INCH	94212500, 7½" Spacing	8541	55,963.00
SF9421-25-10INCH	94212501, 10" Spacing	8541	54,428.00
SF9421-30-75INCH	94213000, 7½" Spacing	10879	62,373.00
SF9421-30-10INCH	94213001, 10" Spacing	10879	60,539.00

Group 02 Openers 15" Smooth Blade

(All Purpose with Parallel Links, Adjustable for No-Till, Min-Till & Conventional Seeding)

For SF9421-20

18000151S	32 Staggered Double Disc Openers, 7½" Spacing	4080	26,122.00
18000153S	24 Staggered Double Disc Openers, 10" Spacing	3060	19,591.00

For SF9421-25

18000154S	40 Staggered Double Disc Openers, 7½" Spacing	5100	32,650.00
18000155S	30 Staggered Double Disc Openers, 10" Spacing	3825	24,487.00

For SF9421-30

18000156S	48 Staggered Double Disc Openers, 7½" Spacing	6120	39,181.00
18000157S	36 Staggered Double Disc Openers, 10" Spacing	4590	29,386.00

Group 03 Press Wheels Order 1 per Opener

7500341BS	2" x 13" Smooth Crown	10	76.00
7500343BS	3" x 13" Center Rib	10	76.00
7500344BS	3" x 13" Double Rib	10	76.00
7500340BS	4" x 12" Double Rib	10	76.00

9421 SERIES SUNFLOWER TWO SECTION FOLDING GRAIN DRILL

ORDER CODE	DESCRIPTION	APPROX. WEIGHT (LBS)	LIST PRICE

OPTIONAL EQUIPMENT - For Current Machines ONLY

Legume / Grass Seed Box – Order Box plus ONE Attachment, either 7½" or 10" spacing

For SF9421-20

7500290RS	Legume / Grass Seed Box for SF9421-20	326	5,930.00
18000054S	Attachment for 7½" Spacing	112	2,420.00
18000056S	Attachment for 10" Spacing	84	1,967.00

For SF9421-25

7500389RS	Legume / Grass Seed Box for SF9421-25	488	6,865.00
18000170S	Attachment for 7½" Spacing	112	3,130.00
18000171S	Attachment for 10" Spacing	84	2,516.00

For SF9421-30

7500390RS	Legume / Grass Seed Box for SF9421-30	437	8,421.00
18000172S	Attachment for 7½" Spacing	168	3,727.00
18000173S	Attachment for 10" Spacing	128	3,029.00

Opener Shields

18258BS	Opener Shield for SF9421-20	164	534.00
18259BS	Opener Shield for SF9421-25	152	779.00
19320BS	Opener Shield for SF9421-30	176	832.00

Seed Cup Dividers (Tents) (Order Number of Openers Minus 1 Per Hopper)

12397YDS	Seed Cup Dividers, 7½" Spacing	1	6.00
12398YDS	Seed Cup Dividers, 10" Spacing	1	8.00

Hydraulic Row Markers

2500128RS	Hydraulic Row Markers SF9421-20		5,878.00
2500127RS	Hydraulic Row Markers SF9421-25	1020	5,878.00
2500126RS	Hydraulic Row Markers SF9421-30	700	5,878.00

Miscellaneous

2500124RS	Selector Valve Assembly for Tractors with Less Than 4 Hydraulic Outlets	20	371.00
12446RS	Shaft and Bin Level Monitors (Includes one per section)		1,794.00
204-134S	Alfalfa Reducer ORDER ONE PER ROW		6.00
DR12017S	Seed Cup Plug (Order One Per Two Rows - Recommended)	1	1.00

9435 SERIES SUNFLOWER THREE-SECTION FOLDING GRAIN DRILL

F.O.B. Beloit, KS

STANDARD CONFIGURATION

7-1/2" or 10" Row Spacing
Walk Boards
All-Purpose "Heads Up" Double Disc Openers with 15" Smooth Blades
Sight Glasses (2 per Box)
Floating Drives with 8 Ply, 9.5L x 15 Tires on Each Section
Heavy-duty Down Pressure Springs
Heavy-duty Main Lift with Four Cylinders (Two 4" Main Lift Cylinders, Two 3-1/2" Assist Lift Cylinders)
Internal Fluted Meter
Easy Adjust Seed Rate Adjustment Handle (1 per Section, 1/16" Increments)
3.75 Bushel per Foot Total Capacity
Seed Cup Dividers (Tents)
Maintenance Free Lift System (UHMW)
50 Drive Chain with Spring Loaded Idlers
Automatic Hydraulic Wing Lock
Hydraulic Single Point Toolbar Height Adjustment
Extended “Wrap-a-Round” Folding Walking Boards
Automatic Road Lock on Transport
Hex Jack Shafts with Quick Change Cut Steel Sprockets
Warning Light Kit
(4) 3" Spindle and Eight Bolt Hubs (8,000 lb Capacity, Main Frame)
(4) New 380/55R 16.5 Wheel and Tire Assembly (Main Frame)
(4) New 12 Ply 9.5L x 15 Tubeless Tires (Wings)
Digital Acremeter
SMV Emblem

All purpose openers with parallel links, adjustable for no-till, min-till and conventional seeding.
Press Wheels:
Choice of 2" x 13" Smooth Crown, 3" x 13" Center Rib, 3" x 13" Double Rib or 4" x 12" Double Rib

These prices reflect the standard configuration. If items other than those listed in the standard configuration are ordered, then the quoted price below will change.

For Quotation Purposes Only – Please Order Items from the Groups on the Next Pages

MODEL NUMBER	DRILL WIDTH	HOPPER SIZE (#)	ROW SPACING	NUMBER OF OPENERS	ESTIMATED WEIGHT	LIST PRICE
Three-Axis Hitch (2 pt Hitch)						
SF9435-30	30’	10’ (3)	7½”	48	19917	104,913.00
SF9435-30	30’	10’ (3)	10”	36	18267	92,904.00
SF9435-40	40’	10’ (1) & 7½’ (4)	7½”	64	24536	135,074.00
SF9435-40	40’	10’ (1) & 7½’ (4)	10”	48	22336	119,763.00
Draw Bar Hitch						
SF9435-30	30’	10’ (3)	7½”	48	19917	105,498.00
SF9435-30	30’	10’ (3)	10”	36	18267	94,605.00
SF9435-40	40’	10’ (1) & 7½’ (4)	7½”	64	24536	136,157.00
SF9435-40	40’	10’ (1) & 7½’ (4)	10”	48	22336	120,843.00

9435 SERIES SUNFLOWER THREE-SECTION FOLDING GRAIN DRILL

ORDER CODE	DESCRIPTION	APPROX. WEIGHT (LBS)	LIST PRICE

Select One Order Code from Each Group, 01 through 03.

Group 01 Base Machine 3-Section Folding Grain Drill

Three-Axis Hitch (2-Point Hitch)

SF9435-30-75INCH	94353000, 7½" Spacing	13317	62,084.00
SF9435-30-10INCH	94353001, 10" Spacing	13317	60,782.00
SF9435-40-75INCH	94354000, 7½" Spacing	15736	77,970.00
SF9435-40-10INCH	94354001, 10" Spacing	15736	76,934.00

Draw Bar Hitch

SF9435-30-75INCHDBH	94353002, 7½" Spacing	11950	62,669.00
SF9435-30-10INCHDBH	94353003, 10" Spacing.	11950	62,483.00
SF9435-40-75INCHDBH	94354002, 7½" Spacing	15050	79,053.00
SF9435-40-10INCHDBH	94354003, 10" Spacing.	15050	78,014.00

Group 02 Openers 15" Smooth Blade
(All Purpose with Parallel Links, Adjustable for No-Till, Min-Till & Conventional Seeding)

For SF9435-30

18000186S	48 Staggered Double Disc Openers 7½" Spacing	6120	39,181.00
18000187S	36 Staggered Double Disc Openers 10" Spacing	4590	29,386.00

For SF9435-40

18000188S	64 Staggered Double Disc Openers 7½" Spacing	8160	52,240.00
18000189S	48 Staggered Double Disc Openers 10" Spacing	6120	39,181.00

Group 03 Press Wheels Order 1 per Opener

7500341BS	2" x 13" Smooth Crown	10	76.00
7500343BS	3" x 13" Center Rib	10	76.00
7500344BS	3" x 13" Double Rib	10	76.00
7500340BS	4" x 12" Double Rib	10	76.00

9435 SERIES SUNFLOWER THREE-SECTION FOLDING GRAIN DRILL

ORDER CODE	DESCRIPTION	APPROX. WEIGHT (LBS)	LIST PRICE

OPTIONAL EQUIPMENT - For Current Machines ONLY

Legume / Grass Seed Box – Order Box plus ONE Attachment, either 7½" or 10" spacing

For SF9435-30

7500477RS	Legume / Grass Seed Box -SF9435-30	489	8,164.00
18000192S	Attachment for 7 ½" Spacing	168	3,718.00
18000193S	Attachment for 10" Spacing	126	3,021.00

For SF9435-40

7500476RS	Legume / Grass Seed Box -SF9435-40	651	10,692.00
18000190S	Attachment for 7 ½" Spacing	331	4,877.00
18000191S	Attachment for 10" Spacing	170	3,961.00

Opener Shields

18260BS	Opener Shield for SF9435-30	176	832.00
18261BS	Opener Shield for SF9435-40	304	1,032.00

Hydraulic Row Markers

2500172RS	Hydraulic Row Marker, SF9435-30	1020	6,545.00
2500170RS	Hydraulic Row Marker, SF9435-40	1070	7,161.00

Miscellaneous

18052RS	500 Gallon Elliptical, Liquid Fertilizer Tank & Saddle Assembly		2,224.00
2500164RS	Selector Valve Assembly (for Tractors with Less than 4 Hydraulic Outlets)	20	598.00
10854RS	Shaft and Bin Level Monitors (Includes one per section)		1,857.00
204-134S	Alfalfa Reducer ORDER ONE PER ROW		6.00
DR12017S	Seed Cup Plug (Order One Per Two Rows - Recommended)	1	1.00

9531 SERIES SUNFLOWER FOLDING FERTILIZER GRAIN DRILL
F.O.B. Beloit, KS

STANDARD CONFIGURATION

7-1/2" or 10" Row Spacing
Walk Boards
All-Purpose "Heads Up" Double Disc Openers with 15" Smooth Blades
Sight Glasses (2 per Box)
Floating Drives with 8 Ply, 9.5L x 15 Tires on Each Section
Heavy-duty Down Pressure Springs
Heavy-duty Main Lift with Four Cylinders (Two 4" Main Lift Cylinders, Two 3-1/2" Assist Lift Cylinders)
Internal Fluted Meter
Easy Adjust Seed Rate Adjustment Handle (1 per Section, 1/16" Increments)
3.75 Bushel per Foot Total Capacity
Hopper Capacity: 2.4 Bushel per Foot (Seed) and 120 lb. per Foot (Dry Fertilizer)
Seed Cup Dividers (Tents)
Maintenance Free Lift System (UHMW)
50 Drive Chain, with Spring Loaded Idlers
Automatic Hydraulic Wing Lock
Hydraulic Single Point Toolbar Height Adjustment
Extended “Wrap-a-Round” Folding Walking Boards
Automatic Road Lock on Transport
Hex Jack Shafts with Quick Change Cut Steel Sprockets
Warning Light Kit
(4) 3" Spindle and Eight Bolt Hubs (8,000 lb. Capacity, Main Frame)
(4) New 380/55R 16.5 Wheel and Tire Assembly (Main Frame)
(4) New 12 Ply 9.5L x 15 Tubeless Tires (Wings)
Digital Acremeter
SMV Emblem

Press Wheels:
Choice of 2" x 13" smooth crown, 3" x 13" center rib, 3" x 13" double rib or 4" x 12" double rib
All purpose openers with parallel links, adjustable for no-till, min-till and conventional seeding.

These prices reflect the standard configuration. If items other than those listed in the standard configuration are ordered, then the quoted price below will change.

For Quotation Purposes Only – Please Order Items from the Groups on the Next Pages

MODEL NUMBER	DRILL WIDTH	HOPPER SIZE (#)	ROW SPACING	NUMBER OF OPENERS	ESTIMATED WEIGHT	LIST PRICE
Three-Axis Hitch (2-Point Hitch)						
SF9531-30	30’	10’ (3)	7½”	48	21059	113,513.00
SF9531-30	30’	10’ (3)	10”	36	19409	102,253.00
SF9531-40	40’	10’ (1) & 7½’ (4)	7½”	64	25679	144,524.00
SF9531-40	40’	10’ (1) & 7½’ (4)	10”	48	23479	129,141.00
Draw Bar Hitch						
SF9531-30	30’	10’ (3)	7½”	48	21059	116,298.00
SF9531-30	30’	10’ (3)	10”	36	19409	105,040.00
SF9531-40	40’	10’ (1) & 7½’ (4)	7½”	64	25679	145,750.00
SF9531-40	40’	10’ (1) & 7½’ (4)	10”	48	23479	130,367.00

9531 SERIES SUNFLOWER THREE-SECTION FOLDING GRAIN DRILL

ORDER CODE	DESCRIPTION	APPROX. WEIGHT (LBS)	LIST PRICE

Select One Order Code from Each Group, 01 through 03.

Group 01 Base Machine 3-Section Folding Grain Drill

Three-Axis Hitch (2-Point Hitch)

SF9531-30-75INCH	95313000, 7½" Spacing	14459	70,684.00
SF9531-30-10INCH	95313001, 10" Spacing	14459	70,131.00
SF9531-40-75INCH	95314000, 7½" Spacing	16879	87,420.00
SF9531-40-10INCH	95314001, 10" Spacing	16879	86,312.00

Draw Bar Hitch

SF9531-30-75INCHDBH	95313002, 7½" Spacing.	14459	73,469.00
SF9531-30-10INCHDBH	95313003, 10" Spacing	14459	72,918.00
SF9531-40-75INCHDBH	95314002, 7½" Spacing.	16879	88,646.00
SF9531-40-10INCHDBH	95314003, 10" Spacing	16879	87,538.00

Group 02 Openers 15" Smooth Blade Disc Openers
(All Purpose with Parallel Links, Adjustable for No-Till, Min-Till & Conventional Seeding)

For SF9531-30

18000186S	48 Staggered Double Disc Openers 7½" Spacing	6120	39,181.00
18000187S	36 Staggered Double Disc Openers 10" Spacing	4590	29,386.00

For SF9531-40

18000188S	64 Staggered Double Disc Openers 7½" Spacing	8160	52,240.00
18000189S	48 Staggered Double Disc Openers 10" Spacing	6120	39,181.00

Group 03 Press Wheels Order 1 per Opener

7500341BS	2" x 13" Smooth Crown	10	76.00
7500343BS	3" x 13" Center Rib	10	76.00
7500344BS	3" x 13" Double Rib	10	76.00
7500340BS	4" x 12" Double Rib	10	76.00

9531 SERIES SUNFLOWER THREE-SECTION FOLDING GRAIN DRILL

ORDER CODE	DESCRIPTION	APPROX. WEIGHT (LBS)	LIST PRICE

OPTIONAL EQUIPMENT - For Current Machines ONLY

Legume / Grass Seed Box – Order Box plus ONE Attachment, either 7½" or 10" spacing

For SF9531-30

7500491RS	Legume / Grass Seed Box for SF9531-30	489	8,164.00
18000202S	Attachment for 7½" Spacing	168	3,718.00
18000203S	Attachment for 10" Spacing	126	3,021.00

For SF9531-40

7500492RS	Legume / Grass Seed Box for SF9531-40	651	10,692.00
18000204S	Attachment for 7½" Spacing	331	4,877.00
18000205S	Attachment for 10" Spacing	170	3,961.00

Opener Shields

19320BS	Opener Shield for SF9531-30	176	832.00
18261BS	Opener Shield for SF9531-40	304	1,032.00

Hydraulic Row Markers

2500172RS	Hydraulic Row Marker, SF9531-30	1020	6,545.00
2500170RS	Hydraulic Row Marker, SF9531-40	1070	7,161.00

Miscellaneous

18052RS	500 Gallon Elliptical, Liquid Fertilizer Tank & Saddle Assembly		2,224.00
2500164RS	Selector Valve Assembly (for Tractors with Less than 4 Hydraulic Outlets)	20	598.00
10854RS	Shaft and Bin Level Monitors (Includes one per section)		1,857.00
204-134S	Alfalfa Reducer ORDER ONE PER ROW		6.00
DR12017S	Seed Cup Plug (Order One Per Two Rows - Recommended)	1	1.00

9610 SERIES MIN-TILL 3-POINT GRAIN DRILL
F.O.B. BELOIT, KS

STANDARD CONFIGURATION

6", 7-1/2" or 10" Row Spacing
Double Disc "Heads Up" Openers with 15" Smooth Blades
Soil Control Devices
Heavy-duty Pneumatic Down Pressure System
Floating Drives with 8 Ply, 9.5L x 15 Tires
50 Drive Chain with Spring Loaded Idlers
3.0 Bushel per Foot Boxes
Acremeter
Folding Walk Boards with Boarding Assist Handle
Front Mounted Seed Adjustment
Internal Fluted (6 Flutes) Seed Meters
Seed Cup Dividers (Tents)
Seed Level Indicator and Sight Window in Each Hopper
Hex Jack Shafts with Quick Change Sprockets
SMV Emblem
Warning Light Kit

Choice of press wheels: 2” x 13” smooth crown, 3" x 13" center rib, 3" x 13" double rib or 4" x 12" double rib

These prices reflect the standard configuration. If items other than those listed in the standard configuration are ordered, then the quoted price below will change.

For Quotation Purposes Only – Please Order Items from the Groups on the Next Pages

MODEL NUMBER	DRILL WIDTH	HOPPER SIZE (#)	ROW SPACING	NUMBER OF OPENERS	ESTIMATED WEIGHT	LIST PRICE
SF9610-15	15'	7 ½' (2)	6"	30	6800	45,694.00
SF9610-15	15'	7 ½' (2)	7 ½"	24		40,966.00
SF9610-15	15'	7 ½' (2)	10"	18		35,746.00
SF9610-20	20'	10' (2)	6"	40	8900	57,954.00
SF9610-20	20'	10' (2)	7 ½"	32		51,322.00
SF9610-20	20'	10' (2)	10"	24		44,475.00

9610 SERIES MIN-TILL 3-POINT GRAIN DRILL

ORDER CODE	DESCRIPTION	APPROX. WEIGHT (LBS)	LIST PRICE
	Select One Order Code from Each Group, 01 through 04.		
Group 01 Base Machine - 3-Point Grain Drill			
SF9610-15-6INCH	96101500, 6” Spacing	1614	22,008.00
SF9610-15-75INCH	96101501, 7.5" Spacing	1614	21,814.00
SF9610-15-10INCH	96101502, 10" Spacing	1614	21,173.00
SF9610-20-6INCH	96102000, 6" Spacing	2000	26,799.00
SF9610-20-75INCH	96102001, 7.5" Spacing	2000	26,186.00
SF9610-20-10INCH	96102002, 10" Spacing	2000	25,463.00
Group 02 Openers 15" Smooth Blade Conventional Seeding			
For SF9610-15			
18000213S	30 Conventional Opener, 6" Spacing		20,320.00
18000214S	24 Conventional Opener, 7.5" Spacing		16,242.00
18000215S	18 Conventional Opener, 10" Spacing		12,119.00
For SF9610-20			
18000210S	40 Conventional Opener, 6" Spacing		27,029.00
18000211S	32 Conventional Opener, 7.5" Spacing		21,618.00
18000212S	24 Conventional Opener, 10" Spacing		16,102.00
Group 03 Air System			
7500509RS	Air Compressor / Tank Assembly without TPH		1,086.00
7500510RS	Air Compressor / Tank Assembly with TPH		1,142.00
Group 04 Press Wheels (Order One per Opener)			
7500512BS	4" x 12" Double Rib Nylon Rim, Press Wheel		76.00
7500513BS	2" X 13" SM Nylon Rim, Press Wheel		76.00
7500514BS	3" x 13" Center Rib Nylon Rim, Press Wheel		76.00
7500515BS	3" x 13" Double Rib Nylon Rim, Press Wheel		76.00

9610 SERIES MIN-TILL 3-POINT GRAIN DRILL

ORDER CODE	DESCRIPTION	APPROX. WEIGHT (LBS)	LIST PRICE
Seed Boxes and Attachments			**Optional**
Small Seed/Legume Seed Box - Order Box plus ONE Mounting Attachment, either 6", 7 ½" or 10" spacing			
For SF9610-15			
7500526RS	Small Seed/Legume Grass Seed Box	297	8,830.00
18000223S	Mounting Attachment for 6" Spacing	96	1,438.00
18000224S	Mounting Attachment for 7½" Spacing	84	1,253.00
18000225S	Mounting Attachment for 10" Spacing	63	1,109.00
For SF9610-20			
7500523RS	Small Seed/Legume Grass Seed Box	434	8,804.00
18000220S	Mounting Attachment for 6" Spacing	124	1,838.00
18000221S	Mounting Attachment for 7½" Spacing	112	1,700.00
18000222S	Mounting Attachment for 10" Spacing	84	1,477.00
Native Grass Seed Box - Order Box plus ONE Mounting Attachment, either 7 ½" or 10" spacing			
For SF9610-15			
7500532RS	Native Grass Box	892	10,169.00
18000228S	24 Native Grass Attach, 7.5" Spacing		4,440.00
18000229S	18 Native Grass Attach, 10" Spacing		3,511.00
For SF9610-20			
7500529RS	Native Grass Box	1168	11,979.00
18000226S	32 Native Grass Attach, 7.5" Spacing		5,990.00
18000227S	24 Native Grass Attach, 10" Spacing		4,513.00
Small Seed & Native Grass Seed Box - Order Box plus ONE Mounting Attachment either 7 ½" or 10" spacing			
For SF9610-15			
7500520RS	Small Seed and Native Grass Box	1171	18,108.00
18000218S	24 Small Seed and Native Grass Attach, 7.5" Spacing		5,432.00
18000219S	18 Small Seed and Native Grass Attach, 10" Spacing		4,262.00
For SF9610-20			
7500517RS	Small Seed and Native Grass Box	1555	19,780.00
18000216S	32 Small Seed and Native Grass Attach, 7.5" Spacing		7,298.00
18000217S	24 Small Seed and Native Grass Attach, 10" Spacing		5,683.00
OPTIONAL EQUIPMENT - For Current Machines ONLY			
Hydraulic Row Markers			
2500183RS	Hydraulic Row Markers for SF9610-15	500	4,215.00
2500185RS	Hydraulic Row Markers for SF9610-20	525	4,230.00
Transport Pull Hitches			
2500100S	Transport Pull Hitch		8,148.00
Miscellaneous			
204-134S	Alfalfa Reducer ORDER ONE PER ROW		6.00
DR12017S	Seed Cup Plug (Order One Per Two Rows - Recommended)		1.00

9700 SERIES AIR-TILL DRILLS
F.O.B. WAHPETON, ND

STANDARD CONFIGURATION

Air Till Drills
High Strength All Welded 4" x 4" x 3/8" Tube Frame
(4) 13.5 x 31 12 ply Tires with Eight Bolt Wheels (Main Frame Front 9730-40)
(4) 13.5 x 31 12 ply Tires with Six Bolt Wheels (Wings 9730-40)
(4) 440 /55R18 Tires with Eight Bolt Wheels (Main Frame Front 9750-50 and 60)
(8) 13.5 x 31 12 ply Tires with Six Bolt Wheels (Wings 9750-50 and 60)
(4) 13.5 x 31 12 ply Tires with Eight Bolt Wheels (Main Frame Rear 9730-40, 50 and 60)
Waking Beam Mounted 26/6.50-15 Pneumatic Packer Tires
650 lb. Edge-On Release Shanks - 10" or 15" Shank Spacing
Heavy Duty Screw Type Jack
Stop Collar Depth Control
Safety Chain
Transport Warning Lights
Wing Locks

Dimensions	9730-40	9750-50	9750-60
Sections	3	5	5
10" Row Spacing in (cm)	10 (25.4)	10 (25.4)	10 (25.4)
10" Row Spacing # Seed Openers	48	60	72
15" Row Spacing in (cm)	N/A	15 (38.1)	15 (38.1)
15" Row Spacing # Seed Openers	N/A	40	48
Working Width ft (m)	40 (12.2)	50 (15.2)	60 (18.3)
Transport Width ft (m)	21 (6.4)	21 (6.4)	21 (6.4)
Transport Height ft (m)	17 (5.2)	15.5 (4.7)	17 (5.2)
Weight lbs (kg) 10" Spacing	29500 (13,381)	38,500 (17,463)	41,500 (18,824)
Weight lbs (kg) 15" Spacing	N/A	33,500 (15,331)	36,500 (16,556)
Tractor Requirement	360 HP	450 HP	540 HP

9700 SERIES AIR-TILL DRILLS

ORDER CODE		DESCRIPTION	APPROX. WEIGHT (LBS)	LIST PRICE

Select One Order Code from Each Group, 01 through 07 as Required.

Group 01 Base Machine - Air-Till Drill with 10" Spacing

SF9730-4010	243998AW	40 ft. 10" Spacing Air-Till Drill	29,500	119,818.00
SF9750-5010	66720AW	50 ft. 10" Spacing Air-Till Drill	38,500	154,796.00
SF9750-5015	245678AW	50 ft. 15" Spacing Air-Till Drill	33,500	138,691.00
SF9750-6010	247900AW	60 ft. 10" Spacing Air-Till Drill	41,500	167,563.00
SF9750-6015	67460AW	60 ft. 15" Spacing Air-Till Drill	36,500	149,798.00

Group 02 Shank Assembly (Shanks only, less seed boots and openers)

9730-4010

66536AW	(48) Edge-on Shank	In Base
66535AW	(48) C-Shank	No Charge

9750-5010

66721AW	(60) Edge-on Shank	In Base
66722AW	(60) C-Shank	No Charge

9750-5015

246799AW	(40) Edge-on Shank	In Base
246800AW	(40) C-Shank	No Charge

9750-6010

66532AW	(72) Edge-on Shank	In Base
66531AW	(72) C-Shank	No Charge

9750-6015

66536AW	(48) Edge-on Shank	In Base
66535AW	(48) C-Shank	No Charge

Group 03 Manifold Kit

For 9730-4010

35713AW	No Manifold Kit	No Charge
36173AW	Manifold Kit - Single Shoot	3,649.00
344139AW	Manifold Kit - Dual Shoot (Includes Single Shoot)	7,303.00

For 9750-5010

35713AW	No Manifold Kit	No Charge
344132AW	Manifold Kit - Single Shoot	8,351.00
344133AW	Manifold Kit - Dual Shoot (Includes Single Shoot)	16,375.00

For 9750-5015

35713AW	No Manifold Kit	No Charge
344134AW	Manifold Kit - Single Shoot	7,800.00
344135AW	Manifold Kit - Dual Shoot (Includes Single Shoot)	15,057.00

For 9750-6010

35713AW	No Manifold Kit	No Charge
344136AW	Manifold Kit - Single Shoot	9,450.00
344137AW	Manifold Kit - Dual Shoot (Includes Single Shoot)	19,455.00

For 9750-6015

35713AW	No Manifold Kit	No Charge
344138AW	Manifold Kit - Single Shoot	8,020.00
344156AW	Manifold Kit - Dual Shoot (Includes Single Shoot)	15,937.00

9700 SERIES AIR-TILL DRILLS

ORDER CODE	DESCRIPTION	APPROX. WEIGHT (LBS)	LIST PRICE

Select One Order Code from Each Group, 01 through 06 as Required.

Group 04 Air Cart Configuration (Select One)

	For 9730 Series	
344068AW	Single Fan - Tow Behind (280 bu. Cart only) (5")	3,685.00
344069AW	Single Fan - Tow Behind (335 bu. Cart only) (6")	4,043.00
344070AW	Single Fan - Tow Behind (380 and 525 bu. Cart only) ✶(Requires Dolly Kit)	3,675.00
344071AW	Single Fan - Tow Between (380 and 525 bu. Cart only)	2,780.00
344072AW	Dual Fan - Tow Behind (380 and 525 bu. Cart only). ✶(Requires Dolly Kit)	6,874.00
344073AW	Dual Fan - Tow Between (380 and 525 bu. Cart only)	4,850.00
	For 9750 Series	
344074AW	Single Fan - Tow Behind (280 bu. Cart only) (5").	3,675.00
344075AW	Single Fan - Tow Behind (335 bu. Cart only) (6")	4,043.00
344076AW	Single Fan - Tow Behind (380 and 525 bu. Cart only) ✶(Requires Dolly Kit)	3,685.00
344077AW	Single Fan - Tow Between (380 and 525 bu. Cart only)	2,780.00
344078AW	Dual Fan - Tow Behind (380 and 525 bu. Cart only). ✶(Requires Dolly Kit)	6,874.00
344079AW	Dual Fan - Tow Between (380 and 525 bu. Cart only)	4,850.00

Note: ✶ Requires Dolly Kit (See 9930 Series Options)

Group 05 Wireless Blockage Monitor (Optional)

	All Models	
320848AW	No Blockage Monitor	In Base
	For 9730-4010	
344084AW	All Run Blockage-Single Shoot (2-Head, 48-1.25" Sensors)	6,372.00
344140AW	All Run Blockage-Dual Shoot (Includes Single)	12,252.00
344141AW	Zone Blockage Dual Shoot (Includes Single)	8,199.00
	For 9750-5010	
344157AW	All Run Blockage-Single Shoot (6-Head, 60-1.25" Sensors)	10,769.00
344142AW	All Run Blockage-Dual Shoot (Includes Single)	16,375.00
344143AW	Zone Blockage-Dual Shoot (Includes Single)	11,869.00
	For 9750-5015	
344158AW	All Run Blockage-Single Shoot (6-Head, 40-1.25" Sensors)	7,800.00
344144AW	All Run Blockage-Dual Shoot (includes Single)	12,528.00
344145AW	Zone Blockage Dual Shoot (includes Single)	8,900.00
	For 9750-6010	
344052AW	All Run Blockage-Single Shoot (6-Head, 72-1.25" Sensors)	11,869.00
344146AW	All Run Blockage-Dual Shoot (Includes Single)	18,685.00
344147AW	Zone Blockage-Dual Shoot (Includes Single)	14,067.00
	For 9750-6015	
344159AW	All Run Blockage-Single Shoot (6-Head, 48-1.25" Sensors)	9,560.00
344148AW	All Run Blockage-Dual Shoot (includes Single)	14,176.00
344149AW	Zone Blockage Dual Shoot (includes Single)	10,769.00

9700 SERIES AIR-TILL DRILLS

ORDER CODE	DESCRIPTION	APPROX. WEIGHT (LBS)	LIST PRICE
Group 06 Display for Wireless Blockage Monitor			
320849AW	No Display for Wireless Blockage Monitor		No Charge
Group 07 Shipping Configuration (Select One)			
344062AW	Haul Out (Freight not Included) for 9730 Series		388.00
344064AW	Haul Out (Freight not Included) for 9750 Series		388.00
OPTIONAL EQUIPMENT			
36152AW	NH3 Electronics Kit **ALL MODELS**		1,269.00

Note: SB4 Seed Boots fit Edge Shanks Only. C-Shank Openers and Seed Boots must be sourced locally.

	For 9730-4010		
66909AW	Disc Levelers (back two ranks + 1)		8,360.00
66726AW	Disc Leveler (every shank)		16,052.00
34799AW	7" LDC Sweeps		3,696.00
66992AW	SB4 Boots with Splitters		6,599.00
	For 9750-5010		
66910AW	Disc Levelers (back two ranks + 1)		10,363.00
66727AW	Disc Levelers (every shank)		20,053.00
34800AW	7" LDC Sweeps		4,618.00
66993AW	SB4 Boots with Splitters		8,246.00
	For 9750-5015		
67923AW	Disc Levelers (back two ranks + 1)		7,037.00
67919AW	Disc Levelers (every shank)		13,413.00
344017AW	Coulter Kit (every shank)		18,035.00
67927AW	7" LDC Sweeps		3,079.00
67928AW	SB4 Boots with Splitters		5,497.00
	For 9750-6010		
66911AW	Disc Levelers (back two ranks + 1)		12,371.00
66728AW	Disc Levelers (every shank)		24,080.00
34801AW	7" LDC Sweeps		5,544.00
66994AW	SB4 Boots with Splitters		9,897.00
	For 9750-6015		
66909AW	Disc Levelers (back two ranks + 1)		8,360.00
66726AW	Disc Levelers (every shank)		16,052.00
344018AW	Coulter Kit (every shank)		21,637.00
34799AW	7" LDC Sweeps		3,696.00
66992AW	SB4 Boots with Splitters		6,599.00

9700 SERIES AIR-TILL DRILLS

Factory Assembly (Net prices on assembly - discounts do not apply)

ORDER CODE	DESCRIPTION	APPROX. WEIGHT (LBS)	LIST PRICE
	For 9730-4010		
35154AW	Base Unit		6,599.00
67467AW	Dual Shoot Manifold		606.00
67466AW	All Run Blockage - Single Shoot		497.00
344088AW	Zone Blockage - Dual Shoot		745.00
344089AW	All Run Blockage - Dual Shoot		989.00
	For 9750-5010		
35155AW	Base Unit		8,908.00
67470AW	Dual Shoot Manifold		1,429.00
67469AW	All Run Blockage - Single Shoot		606.00
344085AW	Zone Blockage - Dual Shoot		911.00
344086AW	All Run Blockage - Dual Shoot		1,211.00
	For 9750-5015		
67929AW	Base Unit		7,915.00
344160AW	Dual Shoot Manifold		1,209.00
67931AW	All Run Blockage - Single Shoot		495.00
344152AW	Zone Blockage - Dual Shoot		605.00
344153AW	All Run Blockage - Dual Shoot		990.00
	For 9750-6010		
35156AW	Base Unit		9,897.00
67473AW	Dual Shoot Manifold		1,542.00
67472AW	All Run Blockage - Single Shoot		663.00
344150AW	Zone Blockage - Dual Shoot		962.00
344087AW	All Run Blockage - Dual Shoot		1,320.00
	For 9750-6015		
67464AW	Base Unit		8,576.00
344161AW	Dual Shoot Manifold		1,319.00
67474AW	All Run Blockage - Single Shoot		549.00
344154AW	Zone Blockage - Dual Shoot		660.00
344155AW	All Run Blockage - Dual Shoot		1,100.00

9830NT SERIES SINGLE DISC DRILLS
INTEGRATED HOPPER
F.O.B. WAHPETON, ND

STANDARD CONFIGURATION

Dual Onboard Poly Hoppers
Capacity: 105 bu. Front / 70 bu. Rear
(2) Electric Drive Meters Per Section
Dedicated Seed Meter Flute & Venturi Per Row
ISA Wireless Blockage System (Requires iPad to Operate, Not Included)
6-9 in. Paired Seed Rows
Pneumatic Packer Tires (Each Tire Packs 2 Seed Rows)
18" Opener Disc Blades
Hydraulic Opener and Packing Pressure Operator Controlled on "On-The-Go"
Seeding Toolbars on 30 in. Spacing
High Strength All Welded 6" x 8" and 4" x 8" Tube Frame; 3" x 5" Steel Tube Toolbars
Center Section Walking Tandems with 440/55R 18IMP 159A8/B TL (GY) Tires,
3" Walking Beam Pivots and 3" Slip-in Spindles
Single, 36 x 17.5 (8 ply) Rib Duplex Tires on Wings
4 5" x 30" Wing Fold Cylinders
Rephasing Lift System with Seeding Depth Control Collars and Chart
Toolbar and Wing Lock-ups
Safety Chain
Transport Warning Lights
Meter Access and Rear Work Lighting

Integrated Hopper (60/40 Split) Total Capacity bu (L)	**175bu. (6200)**
Hopper Capacities Front and Rear bu. (L)	**105 (3700) & 70 (2500)**
Number of Seed Openers 6-9"	**48**
Number of Toolbars (Four Rows per)	**12**
Number of Sections	**3**
Number of Meter Rollers and Electric Drives	**6**
Working Width - ft. (m)	**30 (9.14)**
Transport Width - ft. (m)	**11.5 (3.5)**
Transport Height - ft. (m)	**13.13 (4.0)**
Seeding Depth in (cm)	**0 - 3 (0 - 7.6)**
Weight (empty) lbs. (kg)	**24,400 (11,091)**
Tractor Requirement	**225 - 325 hp**

9830NT SERIES SINGLE DISC DRILLS
INTEGRATED HOPPER

ORDER CODE	DESCRIPTION	APPROX. WEIGHT (LBS)	LIST PRICE
Group 01 Base Machine			
SF9830-30NT	321720AW, 30 ft. Single Disc Drill. . . . . with Integrated Hoppers	21200	130,285.00
Group 02 Rear Toolbar Assembly			
321972AW	Rear Toolbars - 6-9 in. Paired Row (48 Cast Seed Openers). . . .		31,600.00
Group 03 Integrated Hopper Mounting			
321731AW	Integrated Hopper Mounting Hardware		99.00
Group 04 Monitor/Cab Kit			
330779AW	No Cab Kit (For use with Existing Virtual Terminal)		No Charge
330064AW	Monitor Cab Kit - Virtual Terminal (7 " Full Color) C1000		2,803.00
330534AW	Monitor Cab Kit - Virtual Terminal (12.1" Full Color) C3000		5,299.00
Group 06 Shipping Configuration			
320178AW	Tow Out - Freight NOT Included . . . . . Assembled Unit goes behind a Tractor or Truck		585.00
320179AW	Haul Out - Freight NOT Included. . . . . Assembled Unit goes on a Trailer Some Assembly Required at the Dealership		585.00
Optional Equipment			
321973AW	Ballast Kit		1,225.00
320553AW	Packer Shim (One per Toolbar).		17.00
321974AW	Power Cable Kit . . . . . (Required to Supply Tractor Battery Power to the Drill)		295.00
321090AW	Meter Wheel - White (As Included In Base)		10.00

9800 SERIES SINGLE DISC DRILLS
F.O.B. WAHPETON, ND

STANDARD CONFIGURATION

Air Drills
High Strength All Welded 6" x 8" and 4" x 8" Tube Frame; 3" x 5" Steel Tube Toolbars
Tires - 440/55R 18IMP 159A8/B TL (GY) Tires Main
Single, 36 x 17.5 (8 ply) Rib Duplex Tires on Wings
Center Section Walking Tandems with 3" Walking Beam Pivots and 3" Slip-in Spindles
4 5" x 30" Wing Fold Cylinders
Rephasing Lift System with Seeding Depth Control Collars and Chart
Seeding Toolbars Spaced at 30 inches
Toolbar and Wing Lock-ups
Pneumatic Packer Tires with Three Position Lateral Adjustment; Each Tire Packs 2 Seed Rows
Safety Chain
Transport Warning Lights

9380-30 through 9850-60
6-9" (15-23cm) or 6-24" (15-61cm) Paired Seed Rows
18" Opener Disc Blades
Hydraulic Row Unit Down Pressure with Control Box
Air Cart Hydraulic and Electrical Connection Bulkhead
Heavy Duty Screw Type Jack
Caster Lock on Rear Hydraulic Lift Assist

Dimensions	9830-30	9830-40F	9830-40HLA	9850-50	9850-60
Sections	3	3	3	5	5
Number of Seed Openers 6-9" / 6-24" Spacing	48 / 24	64 / 32	64 / 32	80 / 40	96 / 48
Toolbars	12	16	16	20	24
Mid-Row Banders - Optional	Yes	No	Yes	Yes	Yes
Working Width - ft (m)	30 (9.1)	40 (12.2)	40 (12.2)	50 (15.2)	60 (18.3)
Transport Width - ft (m)	14' 3" (4.3)	18' 11" (5.8)	18' 11" (5.8)	21' 6" (15.2)	21' 6" (15.2)
Transport Height - ft (m) Min - Max	14' - 15' 6" (4.42 - 4.72)	16' - 17' 10" (5.13 - 5.44)	16' - 17' 10" (5.13 - 5.44)	16' 4" - 18' 4" (4.98 - 5.59)	16' - 17' 10" (5.13 - 5.43)
Weight - lbs (kg)	21,200 (9,616)	26,500 (12,020)	29,500 (13,380)	39,000 (17,690)	42,500 (19,278)
Tractor Requirement	200-300 HP	250-350 HP	300-400 HP	350-450 HP	400-500 HP

9800 SERIES SINGLE DISC DRILLS

ORDER CODE		DESCRIPTION	APPROX. WEIGHT (LBS)	LIST PRICE
		Select One Order Code from Each Group, 01 through 06 as Required.		
Group 01		**Base Machine - Single Disc Drill**		
SF9830-30	67441AW	30 ft. Single Disc Drill	21200	76,353.00
SF9830-40F	66551AW	40 ft. Single Disc Drill	26500	82,976.00
SF9830-40HLA	320845AW	40 ft. Single Disc Drill with Hydraulic Lift Assist	26500	97,971.00
SF9850-50	320846AW	50 ft. Single Disc Drill with Hydraulic Lift Assist	39000	130,672.00
SF9850-60	320847AW	60 ft. Single Disc Drill with Hydraulic Lift Assist	42500	136,077.00
Group 02		**Rear Hitch - for 9830-30 and 9830-40F**		
35969AW		Light Package, Without Rear Hitch (for Tow Between Cart Only)		(3,629.00)
35966AW		Rear Hitch - Floating, with Pintle Receiver		In Base
320668AW		Heavy Rear Hitch for 9830-30 & 9830-40F (Required for Tow Behind 3800 or 5250)		18,326.00
36134AW		Rear Hitch - Non Sunflower Cart for 9830-30 (Tow Behind Cart with Front Caster)		No Charge
36074AW		Rear Hitch - Non Sunflower Cart for 9830-40F (Tow Behind Cart with Front Caster)		No Charge
Group 03		**Rear Toolbar Assembly**		
		For 9830-30		
320166AW		Rear Toolbars - 6-9" Paired Row (48 Seed Openers)		35,835.00
320571AW		Rear Toolbars - 6-9" Paired Row with Mid-Row Banders (48 Seed / 24 Bander)		55,189.00
321444AW		30' Rear Toolbars 6-9" Paired Row (Rock Conditions, increases opener blade fore and aft spacing to 16" will not accommodate Mid-Row Banders) Seed Only Openers		36,143.00
320167AW		Rear Toolbars - 6-24" Paired Row (24 Seed Openers)		19,567.00
320728AW		Rear Toolbars - 6-24" Paired Row w/ Mid-Row Banders (24 Seed / 12 Bander)		31,549.00
		For 9830-40F		
320180AW		Rear Toolbars - 6-9" Paired Row (64 Seed Openers)		48,264.00
320181AW		Rear Toolbars - 6-24" Paired Row (32 Seed Openers)		26,052.00
321445AW		40' Rear Toolbars 6-9" Paired Row (Rock Conditions, increases opener blade fore and aft spacing to 16" will not accommodate Mid-Row Banders) Seed Only Openers		48,051.00
		For 9830-40HLA		
320593AW		Rear Toolbars - 6-9" Paired Row (64 Seed Openers)		48,264.00
320572AW		Rear Toolbars - 6-9" Paired Row with Mid-Row Banders (64 Seed / 32 Bander)		74,098.00
320594AW		Rear Toolbars - 6-24" Paired Row (32 Seed Openers)		26,600.00
320729AW		Rear Toolbars - 6-24" Paired Row w/ Mid-Row Banders (32 Seed / 16 Bander)		42,549.00

ORDER CODE	DESCRIPTION	APPROX. WEIGHT (LBS)	LIST PRICE

Group 03 Rear Toolbar Assembly - continued

For 9850-50

320182AW	Rear Toolbars - 6-9" Paired Row (80 Seed Openers).		60,137.00
320573AW	Rear Toolbars - 6-9" Paired Row with Mid-Row Banders . . . . . (80 Seed / 40 Bander)		92,349.00
321130AW	50' Rear Toolbars 6-9" Paired Row. . . . . (Rock Conditions, increases opener blade fore and aft spacing to 16" will not accommodate Mid-Row Banders) Seed Only Openers		60,600.00
320183AW	Rear Toolbars - 6-24" Paired Row (40 Seed Openers).		33,087.00
320730AW	Rear Toolbars - 6-24" Paired Row w/ Mid-Row Banders . . . . . (40 Seed / 20 Bander)		53,109.00

For 9850-60

320185AW	Rear Toolbars - 6-9" Paired Row (96 Seed Openers).		72,121.00
320574AW	Rear Toolbars - 6-9" Paired Row with Mid-Row Banders . . . . . (96 Seed / 48 Bander)		110,818.00
320186AW	Rear Toolbars - 6-24" Paired Row (48 Seed Openers).		39,578.00
321447AW	60' Rear Toolbars 6-9" Paired Row. . . . . (Rock Conditions, increases opener blade fore and aft spacing to 16" will not accommodate Mid-Row Banders) Seed Only Openers		71,862.00
320731AW	Rear Toolbars - 6-24" Paired Row w/ Mid-Row Banders . . . . . (48 Seed / 24 Bander)		63,668.00

9800 SERIES SINGLE DISC DRILLS

Group 04 Manifold Kit

ORDER CODE	DESCRIPTION	APPROX. WEIGHT (LBS)	LIST PRICE
	For 9830-30		
35713AW	Without Manifold Kit		No Charge
67312AW	SF Manifold Kit - Single Shoot 6-9"		3,293.00
320910AW	SF Manifold Kit - Dual Shoot 6-9"		7,692.00
320233AW	SF Manifold Kit - Single Shoot 6-24"		2,852.00
320911AW	SF Manifold Kit - Dual Shoot 6-24"		6,496.00
35700AW	Non-SF Manifold Kit - Single Shoot 6-9"		6,481.00
320926AW	Non-SF Manifold Kit - Dual Shoot 6-9"		12,749.00
320235AW	Non-SF Manifold Kit - Single Shoot 6-24"		6,263.00
320927AW	Non-SF Manifold Kit - Dual Shoot 6-24"		12,320.00
	For 9830-40F and 9830-40HLA		
35713AW	Without Manifold Kit		No Charge
66683AW	SF Manifold Kit - Single Shoot 6-9"		7,475.00
320912AW	SF Manifold Kit - Dual Shoot 6-9"		12,201.00
320246AW	SF Manifold Kit - Single Shoot 6-24"		5,166.00
320913AW	SF Manifold Kit - Dual Shoot 6-24"		10,332.00
35691AW	Non-SF Manifold Kit - Single Shoot 6-9"		8,350.00
320928AW	Non-SF Manifold Kit - Dual Shoot 6-9"		16,709.00
320248AW	Non-SF Manifold Kit - Single Shoot 6-24"		7,914.00
320929AW	Non-SF Manifold Kit - Dual Shoot 6-24"		16,047.00
	For 9850-50		
35713AW	Without Manifold Kit		No Charge
36320AW	SF Manifold Kit - Single Shoot 6-9"		7,583.00
320914AW	SF Manifold Kit - Dual Shoot 6-9"		12,749.00
320261AW	SF Manifold Kit - Single Shoot 6-24"		5,715.00
320915AW	SF Manifold Kit - Dual Shoot 6-24"		11,336.00
35702AW	Non-SF Manifold Kit - Single Shoot 6-9"		9,670.00
320930AW	Non-SF Manifold Kit - Dual Shoot 6-9"		19,017.00
320262AW	Non-SF Manifold Kit - Single Shoot 6-24"		8,681.00
320931AW	Non-SF Manifold Kit - Dual Shoot 6-24"		17,589.00
	For 9850-60		
35713AW	Without Manifold Kit		No Charge
320272AW	SF Manifold Kit - Single Shoot 6-9"		7,800.00
320916AW	SF Manifold Kit - Dual Shoot 6-9"		12,971.00
320274AW	SF Manifold Kit - Single Shoot 6-24"		6,041.00
320917AW	SF Manifold Kit - Dual Shoot 6-24"		11,776.00
35704AW	Non-SF Manifold Kit - Single Shoot 6-9"		10,109.00
320932AW	Non-SF Manifold Kit - Dual Shoot 6-9"		20,115.00
320276AW	Non-SF Manifold Kit - Single Shoot 6-24"		8,681.00
320933AW	Non-SF Manifold Kit - Dual Shoot 6-24"		18,247.00

Note: Dual Shoot Manifold Kits include Single Shoot

9800 SERIES SINGLE DISC DRILLS

ORDER CODE	DESCRIPTION	APPROX. WEIGHT (LBS)	LIST PRICE
Group 05 Wireless Blockage Monitor			
320848AW	No Blockage Monitor in Base		No Charge
	For 9830-30		
320585AW	Single All Run - 6-9" (2-Head, 48-1.25" Sensors)		6,372.00
320918AW	Dual All Run - 6-9" (Includes Single)		10,223.00
320919AW	Dual Zone - 6-9" (Includes Single)		8,350.00
320942AW	Single All Run - 6-24" (2-Head, 24-1.25" Sensors)		4,172.00
320586AW	Non-SF Cart, Single All Run - 6-9" (6-Head, 48-1.25" Sensors)		9,670.00
320934AW	Non-SF Cart, Dual All Run - 6-9" (Includes Single)		11,978.00
320935AW	Non-SF Cart, Dual Zone - 6-9" (includes Single)		10,881.00
320945AW	Non-SF Cart, Single All Run - 6-24" (6-Head, 24-1.25" Sensors)		7,475.00
	For 9830-40F and 9840-40HLA		
320587AW	Single All Run - 6-9" (4-Head, 64-1.25" Sensors)		9,452.00
320920AW	Dual All Run - 6-9" (Includes Single)		12,532.00
320921AW	Dual Zone - 6-9" (includes Single)		10,223.00
320822AW	Single All Run - 6-24" (4-Head, 32-1.25" Sensors)		6,481.00
320588AW	Non-SF Cart, Single All Run - 6-9" (8-Head, 64-1.25" Sensors)		12,309.00
320936AW	Non-SF Cart, Dual All Run - 6-9" (Includes Single)		15,389.00
320937AW	Non-SF Cart, Dual Zone - 6-9" (includes Single)		13,846.00
320946AW	Non-SF Cart, Single All Run - 6-24" (8-Head, 32-1.25" Sensors)		9,344.00
	For 9850-50		
320589AW	Single All Run - 6-9" (4-Head, 80-1.25" Sensors)		10,881.00
320922AW	Dual All Run - 6-9" (Includes Single)		17,697.00
320923AW	Dual Zone - 6-9" (Includes Single)		11,760.00
320943AW	Single All Run - 6-24" (4-Head, 40-1.25" Sensors)		7,252.00
320590AW	Non-SF Cart, Single All Run - 6-9" (8-Head, 80-1.25" Sensors)		13,738.00
320938AW	Non-SF Cart, Dual All Run - 6-9" (Includes Single)		17,589.00
320939AW	Non-SF Cart, Dual Zone - 6-9" (includes Single)		15,389.00
320947AW	Non-SF Cart, Single All Run - 6-24" (8-Head, 40-1.25" Sensors)		10,109.00
	For 9850-60		
320591AW	Single All Run - 6-9" (4-Head, 96-1.25" Sensors)		12,418.00
320924AW	Dual All Run - 6-9" (Includes Single)		19,898.00
320925AW	Dual Zone - 6-9" (Includes Single)		16,160.00
320944AW	Single All Run - 6-24" (4-Head, 48-1.25" Sensors)		8,023.00
320592AW	Non-SF Cart, Single All Run - 6-9" (8-Head, 96-1.25" Sensors)		15,166.00
320940AW	Non-SF Cart, Dual All Run - 6-9" (Includes Single)		19,898.00
320941AW	Non-SF Cart, Dual Zone - 6-9" (includes Single)		16,818.00
320948AW	Non-SF Cart, Single All Run - 6-24" (8-Head, 48-1.25" Sensors)		10,881.00

ORDER CODE	DESCRIPTION	APPROX. WEIGHT (LBS)	LIST PRICE
Group 06 Display for Wireless Monitor			
320849AW	No Display for Wireless Monitor		In Base
Group 08 Air Cart Configuration			
	(Air Cart to Drill Manifold Mating Kits)		
	For 9830-30		
320579AW	Single Fan - Tow Behind (280 bu. Cart Only) (5")		3,293.00
320580AW	Single Fan - Tow Behind (335 bu. Cart Only (6")		3,659.00
320567AW	Single Fan - Tow Behind (380 and 525 bu. Cart Only)		3,659.00
320569AW	Dual Fan - Tow Behind (380 and 525 bu. Cart Only)		5,109.00
320581AW	Single Fan - Tow Behind (380 and 525 bu. Cart Only)		3,293.00
320582AW	Dual Fan - Tow Between (380 and 525 bu. Cart Only)		5,109.00
320583AW	For Non-Sunflower Cart - Tow Behind		1,206.00
320584AW	For Non-Sunflower Cart - Tow Between		543.00
	For 9830-40F		
320565AW	Single Fan - Tow Behind (280 bu. Cart Only) (5")		3,293.00
320566AW	Single Fan - Tow Behind (335 bu. Cart Only (6")		3,659.00
320568AW	Single Fan - Tow Between (380 and 525 bu. Cart Only)		3,293.00
320570AW	Dual Fan - Tow Between (380 and 525 bu. Cart Only)		5,109.00
320583AW	For Non-Sunflower Cart - Tow Behind		1,206.00
320584AW	For Non-Sunflower Cart - Tow Between		543.00
	For 9830-40HLA		
320577AW	Single Fan - Tow Behind (280 bu. Cart Only) (5")		3,293.00
320578AW	Single Fan - Tow Behind (335 bu. Cart Only (6")		3,659.00
320567AW	Single Fan - Tow Behind (380 and 525 bu. Cart Only)		3,659.00
320569AW	Dual Fan - Tow Behind (380 and 525 bu. Cart Only)		5,109.00
320568AW	Single Fan - Tow Between (380 and 525 bu. Cart Only)		3,293.00
320570AW	Dual Fan - Tow Between (380 and 525 bu. Cart Only)		5,109.00
320583AW	For Non-Sunflower Cart - Tow Behind		1,206.00
320584AW	For Non-Sunflower Cart - Tow Between		543.00

9800 SERIES SINGLE DISC DRILLS

ORDER CODE	DESCRIPTION	APPROX. WEIGHT (LBS)	LIST PRICE
Group 08 Air Cart Configuration - continued			
	For 9850-50		
320578AW	Single Fan - Tow Behind (335 bu. Cart Only (6")		3,659.00
320567AW	Single Fan - Tow Behind (380 and 525 bu. Cart Only)		3,659.00
320569AW	Dual Fan - Tow Behind (380 and 525 bu. Cart Only)		5,109.00
320568AW	Single Fan - Tow Between (380 and 525 bu. Cart Only)		3,293.00
320570AW	Dual Fan - Tow Between (380 and 525 bu. Cart Only)		5,109.00
320583AW	For Non-Sunflower Cart - Tow Behind		1,206.00
320584AW	For Non-Sunflower Cart - Tow Between		543.00
	For 9850-60		
320578AW	Single Fan - Tow Behind (335 bu. Cart Only (6")		3,659.00
320567AW	Single Fan - Tow Behind (380 and 525 bu. Cart Only)		3,659.00
320569AW	Dual Fan - Tow Behind (380 and 525 bu. Cart Only)		5,109.00
320583AW	For Non-Sunflower Cart - Tow Behind		1,206.00
Group 09 Shipping Options - Freight Not Included			
320178AW	Tow Out for 9830-30 and 9830-40F		585.00
320179AW	Haul Out for 9830-30 and 9830-40F		585.00
320184AW	Tow Out for 9830-40HLA, 9850-50 and 9850-60		585.00
320219AW	Haul Out for 9830-40HLA, 9850-50 and 9850-60		585.00

9800 SERIES SINGLE DISC DRILLS

ORDER CODE	DESCRIPTION	APPROX. WEIGHT (LBS)	LIST PRICE
Dry Fertilizer and NH3 Application			
	Requires Dual Shoot Manifold and Cart		
	9830-30		
36140AW	Dry Fertilizer Tube - No Scraper (For use with Mid-Row Bander) Used without NH3		1,315.00
320240AW	NH3 Scraper and Injector (For use with Mid-Row Bander). . . . . Requires NH3 Electronics (36152AW)		3,732.00
320239AW	Dry Fertilizer Tube (For use with Mid-Row Bander) . . . . . Requires NH3 Scraper (320240AW)		984.00
36152AW	NH3 Electronics Kit		1,269.00
67445AW	Dry Fertilizer Tubes (For use without Mid-Row Bander). . . . . Broadcasts between Seed Openers		714.00
	9830-40HLA		
36142AW	Dry Fertilizer Tube - No Scraper (For use with Mid-Row Bander) Used without NH3		1,754.00
320259AW	NH3 Scraper and Injector (For use with Mid-Row Bander). . . . . Requires NH3 Electronics (36152AW)		4,943.00
320258AW	Dry Fertilizer Tube (For use with Mid-Row Bander) . . . . . Requires NH3 Scraper (320240AW)		1,315.00
36152AW	NH3 Electronics Kit		1,269.00
67042AW	Dry Fertilizer Tubes (For use without Mid-Row Bander). . . . . Broadcasts between Seed Openers		963.00
	9850-50		
36146AW	Dry Fertilizer Tube - No Scraper (For use with Mid-Row Bander) Used without NH3		2,195.00
320270AW	NH3 Scraper and Injector (For use with Mid-Row Bander). . . . . Requires NH3 Electronics (36152AW)		5,824.00
320269AW	Dry Fertilizer Tube (For use with Mid-Row Bander) . . . . . Requires NH3 Scraper (320240AW)		1,646.00
36152AW	NH3 Electronics Kit		1,259.00
67429AW	Dry Fertilizer Tubes (For use without Mid-Row Bander). . . . . Broadcasts between Seed Openers		1,237.00
	9850-60		
36150AW	Dry Fertilizer Tube - No Scraper (For use with Mid-Row Bander) Used without NH3		2,635.00
320283AW	NH3 Scraper and Injector (For use with Mid-Row Bander). . . . . Requires NH3 Electronics (36152AW)		7,361.00
320282AW	Dry Fertilizer Tube (For use with Mid-Row Bander) . . . . . Requires NH3 Scraper (320240AW)		1,978.00
36152AW	NH3 Electronics Kit		1,269.00
35359AW	Dry Fertilizer Tubes (For use without Mid-Row Bander). . . . . Broadcasts between Seed Openers		1,459.00

9800 SERIES SINGLE DISC DRILLS

ORDER CODE	DESCRIPTION	APPROX. WEIGHT (LBS)	LIST PRICE
BALLAST KITS			
66977AW	Ballast Kit for 9830-30		2,226.00
34703AW	Ballast Kit for 9830-40		2,748.00
67430AW	Ballast Kit for 9850-50		3,955.00
35360AW	Ballast Kit for 9850-60		4,974.00
	Note: Ballast Kits are recommended with Mid-Row Bander Option)		
OPTIONAL EQUIPMENT - For Current Machines ONLY			
36020AW	Rear Hitch Kit (Non-Sunflower Cart) (for 9830-40HLA, 9850-50 and 9850-60)		979.00
36060AW	Uniball Hitch Adapter (For use with Hydraulic Lift Assist or Floating Rear Hitch)		270.00
320575AW	Stalk Shield Kit for Seed Openers (Order One per Toolbar for 6-9" and Two per Toolbar for 6-24" Spacing)		68.00
320576AW	Stalk Shield Kit for Mid-Row Banders (Order One per Toolbar for 6-9" and Two per Toolbar for 6-24" Spacing)		36.00
320125AW	Deep Mid-Row Bander Stop Kit (One per Toolbar) (Not Available for 9830-40F) (Order One per Toolbar for 6-9" and Two per Toolbar for 6-24" Spacing)		33.00
320553AW	Packer Shim (One per Toolbar) All Models		17.00

9800 SERIES SINGLE DISC DRILLS

Factory Assembly (Net Prices on Assembly - Discounts Do Not Apply)

ORDER CODE	DESCRIPTION	APPROX. WEIGHT (LBS)	LIST PRICE
	9830-30		
67451AW	Base Unit		2,153.00
67449AW	Dual Shoot Manifold		755.00
320243AW	All Run Blockage - Single Shoot Manifold		383.00
320245AW	All Run Blockage - Dual Shoot Manifold		761.00
320244AW	Zone Blockage - Dual Shoot Manifold		580.00
	9830-40		
67321AW	Base Unit with Floating Hitch		2,583.00
36153AW	Base Unit with Hydraulic Lift Assist		3,215.00
67325AW	Dual Shoot Manifold		880.00
320255AW	All Run Blockage - Single Shoot Manifold		440.00
320257AW	All Run Blockage - Dual Shoot Manifold		880.00
320256AW	Zone Blockage - Dual Shoot Manifold		663.00
	9850-50		
67436AW	Base Unit		5,316.00
67434AW	Dual Shoot Manifold		1,133.00
320290AW	All Run Blockage - Single Shoot Manifold		570.00
320292AW	All Run Blockage - Dual Shoot Manifold		1,133.00
320291AW	Zone Blockage - Dual Shoot Manifold		854.00
	9850-60		
35367AW	Base Unit		5,875.00
35365AW	Dual Shoot Manifold		1,196.00
320286AW	All Run Blockage - Single Shoot Manifold		694.00
320288AW	All Run Blockage - Dual Shoot Manifold		1,388.00
320287AW	Zone Blockage - Dual Shoot Manifold		1,045.00

9900 SERIES AIR CARTS
F.O.B. FARGO, ND

STANDARD CONFIGURATION

Air Carts, Stainless Steel Construction on Tank and Meter and Meter Drive Components
Standard Equipment All Air Tanks
Formed 4" x 8" and 6" x 6" Steel Tube Frame
14 Gauge Stainless Steel Tanks
Stainless Steel Meter Components
Steel Lid Design
130" Wheel Base
Poly Flighting Auger with Hydraulic Drive
Highly Efficient 6" Air Stream
High Capacity Meter Flutes
ISO Electrical Components
Walk Over Tanks with Access Ladders
Safety Chain
Screw Type Jack
Flood Lights
Transport Warning Lights

Dimensions	9920-280	9920-335	9930-380	9930-525
Capacity	280 Bushels	335 Bushels	380 Bushels	525 Bushels
Compartments	2	2	3	3
Split (Front to Back)	112 bu. / 168 bu.	135 bu. / 200 bu.	128 bu. / 158 bu. / 94 bu.	175 bu. / 225 bu. / 125 bu.
Tow Behind	Yes	Yes	Yes	Yes
Tow Between	No	No	Optional	Optional
Drive	Ground/Hydraulic	Ground/Hydraulic	Hydraulic	Hydraulic
Working Height	12' 8" (3.86 m)	13' 4" (4.06 m)	15' (4.8 m)	17' (5.18 m)
Working Width	11' 5" (3.48 m)	11' 5" (3.48 m)	14' 6" (4.4 m)	16' 6" (4.95 m)
Working Length	27' (8.23 m)	27' (8.23 m)	30' 2" (9.54m)	30' 2" (9.54m)
Weight Empty (est.)	8,500 lb. (3,856 kg)	8,750 lb. (3,946 kg)	13,000 lb. (5,897 kg)	15,750 lb. (7,144 kg)
Fill Height	11' 2" (3.40 m)	11' 8" (3.56 m)	11' 2" (3.4 m)	11' 9" (3.58 m)
Shipping Height	9' 6" (2.89 m)	10' 3" (3.12 m)	9' 2" (2.8 m)	10' 5" (3.18 m)
Width	8' 4" (2.54 m)	8' 4" (2.54 m)	7' 6" (2.28 m)	7' 6" (2.28 m)
Length	19' 2" (5.84 m)	19' 2" (5.84 m)	28' 3" (8.61 m)	28' 3" (8.61 m)
Transport Width	14' 5" (4.4 m)	14' 5" (4.4 m)	14' 8" (4.5 m)	17' 6" (5.5 m)
Transport Height	12' 8" (3.9 m)	13' 5" (4.1 m)	14' 0" (4.3 m)	15' 4" (4.7 m)

9900 SERIES AIR CARTS

ORDER CODE	DESCRIPTION	APPROX. WEIGHT (LBS)	LIST PRICE
	Select One Order Code from Each Group, 01 through 08 as Required.		
	Group 01 Base Machine - Air Cart		
9920-280	66401AW 280 bu. Air Cart, Two Compartments, Tow Behind . .	8500	61,429.00
9920-335	66402AW 335 bu. Air Cart, Two Compartments, Tow Behind . .	8750	67,546.00
9930-380	331000AW 380 bu. Air Cart, Three Compartments		86,393.00
9930-525	37001AW 525 bu. Air Cart, Three Compartments	15750	92,655.00
	Group 02 Rear Axle Spacing for 9920-280 and 9920-335		
65941AW	120" (305 cm) for 9920-280 and 9920-335		In Base
65940AW	150" (380 cm) for 9920-280 and 9920-335		565.00
	Group 03 Tow Configuration for 9930-380 and 9930-525		
37007AW	Tow Behind		In Base
37013AW	Tow Behind-Dual Fan/Dual Air Stream		10,886.00
37006AW	Tow Between		1,310.00
37012AW	Tow Between-Dual Fan/Dual Air Stream		10,172.00
	Group 04 Tires		
330105AW	Tires, 18.4 x 26 R1 for 9920-280 and 9920-335		5,223.00
330106AW	Tires, 23.1 x 26 R1 for 9920-280 and 9920-335		6,599.00
331161AW	Singles, 800/70R38 173A8 for 9930-380		12,408.00
330104AW	Dual Tires, 620/70R42 for 9930-525		21,223.00
	Group 05 Meter Drives for 9920-280 and 9920-335		
66446AW	Ground Drive, One Master Clutch for 120" Rear Axle.		In Base
66447AW	Ground Drive, One Master Clutch for 150" Rear Axle.		No Charge
67218AW	Hydraulic Drive - Two Meters		5,388.00
	Group 06 Monitors		
330779AW	No Cab Kit (For use with Existing Virtual Terminal)		No Charge
330064AW	Monitor Cab Kit - Virtual Terminal (7 " Full Color) C1000		2,803.00
330534AW	Monitor Cab Kit - Virtual Terminal (12.1" Full Color) C3000		5,299.00
	Group 07 Loading Augers with Plastic Flighting		
330778AW	No Auger		No Charge
66100AW	10" (25 cm) Auger for 9920-280 and 9920-335.		7,205.00
37009AW	10" (25 cm) Auger for 9930-380 and 9930-525.		9,291.00
	Group 08 Shipping Options - Freight Not Included		
330115AW	Tow Out for 9920-280 and 9920-335 . . . . . (Includes Necessary Assembly)		No Charge
330116AW	Haul Out for 9920-280 and 9920-335 . . . . . (Includes Necessary Assembly)		No Charge
331182AW	Tow Out / Haul Out, Over Width for 9930-380 . . . . . (Includes Necessary Assembly)		No Charge
330079AW	Haul Out for 9930-380 and 9930-525 . . . . . (Includes Necessary Assembly)		No Charge
330078AW	Tow Out for 9930-525 . . . . . (Includes Necessary Assembly)		No Charge
330080AW	Haul Out, Over Width for 9930-525 . . . . . (Includes Necessary Assembly)		No Charge

ORDER CODE	DESCRIPTION	APPROX. WEIGHT (LBS)	LIST PRICE

OPTIONAL EQUIPMENT - For Current Machines ONLY

Volume Options

1012608AW	Medium Volume Meter Roll, 1/4" x 1/4" Bars		358.00
33851AW	Low Volume Meter Roll		311.00
67639AW	Fine Product Meter Roll (Canola)		311.00
66549AW	Low Volume Insert, for 9920-280 and 9930-380		388.00
66550AW	Low Volume Insert, for 9920-335 and 9930-525		419.00
330781AW	GPS Receiver SGR1 (GPS input for stand alone Monitor / Cab Kit)		1,408.00
36380AW	Dolly Kit (Not for Use with Single Disc Drill) (For 9930-380 and 9930-525 Cart)		12,753.00
331323AW	9930 Single Fan to Dual Fan Tow Between Cart		11,262.00
331324AW	9930 Single Fan to Dual Fan Tow Behind Cart		11,640.00
331326AW	9920 Ground Drive Conversion 120 inches to Ground Drive 150 inches		2,525.00
331327AW	9920 Ground Drive Conversion 150 inches to Ground Drive 120 inches		2,096.00
66337AW	Mesh Hopper		177.00

Drill Toolbar Accessories - For Use with Drills Other Than 9800 Series

66449AW	Female Coupler Set		192.00

RESERVED

WHITE
PLANTERS

PLANTERS

Table of Contents

9000 Series Planters

9100 Pull-Type Rigid Frame Planters 3
9180 Forward Fold Planters 13
9200 Wing Fold Planters 25
9500 Narrow Row Folding Planters 33
9700 Toolbar Mounted Planters 43
9700 Stack-fold Mounted Planters 51
9800VE Narrow Transport Folding Planters 61
9800 Narrow Transport Folding Planters 79
9831 Narrow Transport, Narrow Row Folding Planter 97
9936 Large Frame Folding Planters on Tracks 103
9000 Series Dealer Installed Equipment 109

9100 Pull-Type
Rigid Frame Planters

9100 Pull-Type Rigid Frame Planters

F.O.B. Hesston, Kansas

STANDARD EQUIPMENT

- 7" x 7" Rigid Frame
- Hydraulic Lift with all Cylinders, Hoses and Transport Lock-Up
- Planter Units with Air Metering, Chain Drive Seed Meter, 16" Double Disc Openers, 4.5"x 16" Walking Beam Gauge Wheels
- Direct Drive Quick Couplers
- Transport Wheels with 9.5L-15, 6 Ply Tires
- Highway Transport Lighting
- Highway Transport Chain
- Seed Drain Kit
- High Rate Sensors

Ground Drive Planters

- Central Blower, Manifold, Flow Control Valve and Air Pressure Gauge

	# Rows	Spacing	Center Frame	Wings	Transport Width	Transport Wheels	Total Wheels
Rigid Frames							
WP9106	6	30"	173"	—	193"	4	4
WP9108	8	30"	228"	—	249"	4	4

Ordering Instructions:
Planters are now available with many items Factory Installed.
Factory Installed items are not eligible for return to the factory.

1. Select One Order Code from Base, and One Order Code from Each Group as Required.
2. Order Required Seed Discs from 9000 Series Dealer Installed Section.
3. Additional Dealer Installed Items can be Ordered for these Models (such as Fertilizer Attachments) from this Chapter and from 9000 Series Dealer Installed Section.
4. Accepts Row Unit or Frame Mounted Tillage Attachments.

NOTE: Direct Drive requires 2 remote valves.

ORDER CODE	CATALOG NUMBER	DESCRIPTION	APPROX. WEIGHT (lb.)	LIST PRICE
PULL-TYPE RIGID FRAME PLANTERS				
WP9106	9106909YH	6 Row 30-inch Planter.		22,518.00
WP9108	9108909YH	8 Row 30-inch Planter.		27,591.00

ORDER CODE	CATALOG NUMBER	DESCRIPTION	APPROX. WEIGHT (lb.)	LIST PRICE

MARKERS - Order One Set per Planter — Required

6 Row Planter

2-P201	6000263	Rigid Markers - Factory Installed	229	1,128.00
	6100094	Notched Marker Disc - Dealer Installed	41	458.00
2-P202	6000265	Without Markers.		No Charge
	6000362	Without Marker Disc		No Charge

8 Row Planter

2-P211	6000264	Folding Markers - Factory Installed	246	2,525.00
	6100094	Notched Marker Disc - Dealer Installed	41	458.00
	6001159	Flat Folding Break-Away Markers - Dealer Installed with Notched Marker Discs	950	5,554.00
2-P202	6000267	Without Markers.		No Charge
	6000362	Without Marker Disc		No Charge

SEED HOPPERS AND METERS - See Order Requirements Below — Required

6 Row Planters

5-HO12	6400866	Set of 6 Two-Bushel Hoppers and Meters - Factory Installed **Order one per Planter**	30	5,720.00
	6001647	Three-Bushel Hopper and Meter - Dealer Installed **Order one per Row**	35	929.00
5-HO10	6400865	Without Hoppers and Meters **Order one per Planter**		No Charge

8 Row Planters

5-HO12	6400981	Set of 8 Two-Bushel Hoppers and Meters - Factory Installed **Order one per Planter**	30	6,340.00
	6001647	Three-Bushel Hopper and Meter - Dealer Installed **Order one per Row**	35	929.00
5-HO10	6400880	Without Hoppers and Meters **Order one per Planter**		No Charge

ORDER CODE	CATALOG NUMBER	DESCRIPTION	APPROX. WEIGHT (lb.)	LIST PRICE
◆◆Dealer Installed◆◆		**HYDRAULIC SUPPLY SYSTEM - Order One per Planter**		**Optional**
	6001047	540 RPM PTO Pump	37	1,524.00
	6001048	1000 RPM PTO Pump with 1-3/8 inch Spline Shaft	34	1,678.00
◆◆Dealer Installed◆◆		**CLOSING SYSTEM - Order One per Row**		**Required**
	6001650	Angled Bracket with Rubber Closing Wheels	19	287.00
	6001651	Angled Bracket with Cast Closing Wheels	54	331.00
	6001653	Single "V" Trench Press Wheel	20	273.00
	6001652	Angled Bracket without Closing Wheels (Order Closing Wheels from 9000 Series Dealer Installed Section)		163.00
	6001649	Without Closing Wheels		No Charge
◆◆Dealer Installed◆◆		**MONITOR SYSTEM - Order One per Planter**		**Required**
	6000806	SM300 Seed Population Monitor (Up to 8 Rows) (Requires Magnetic Ground Speed Sensor or Radar Ground Speed and Distance Sensing Gun)	25	1,625.00
	6000805	SM100 Seed Flow Monitor (Up to 8 Rows)	20	1,194.00
	6000100	Without Monitor		No Charge
◆◆Dealer Installed◆◆		**GROUND SPEED SENSOR - Order One per Planter**		**Required**
	6100059	Magnetic Ground Speed Sensor	4	160.00
	6000923	Radar Ground Speed and Distance Sensing Gun	15	1,049.00
	6100064	Radar "Y" Harness (4 pin round tractor connector to 4 pin round monitor connector)		152.00
	6000810	Without Ground Speed and Distance Sensing (Uses Existing Radar) (For Use with 6000805)		No Charge
➢➢Factory Installed➣➣		**ADDITIONAL EQUIPMENT - Order One per Planter**		**Optional**
33-BZ01	6400755	Blower Inlet Screen		99.00
9-A903	6400768	Transmission Shield		25.00
7-PS01	6400878	Row Unit Gauge Wheel Scrapers for 6 Row Planter		210.00
7-PS01	6400989	Row Unit Gauge Wheel Scrapers for 8 Row Planter		280.00
	71428520W	Ship Safe Preservative Coating (Recommended for Protection When Shipped in Winter Months)		604.00

Note: Part # 72515753 - Radar "Y" Harness
(4 pin flat tractor connector to a 4 pin round monitor connector)
(Above Two "Y" Harnesses for tractors equipped with Radar Speed Sensing)

ORDER CODE	CATALOG NUMBER	DESCRIPTION	APPROX. WEIGHT (lb.)	LIST PRICE
➢➢**Factory Installed**➣➣		**DOWN PRESSURE SYSTEM - Order One per Planter**		**Required**
6 Row Planters				
23-KB12	6400870	Heavy Duty Down Pressure Springs	12	1,215.00
23-KB11	6400869	Standard Duty Down Pressure Springs (Not Recommended with Row Unit Mounted Attachments)	7	394.00
23-KB10	6400027	Without Down Pressure Springs		No Charge
8 Row Planters				
23-KB12	6400983	Heavy Duty Down Pressure Springs	12	1,621.00
23-KB11	6400982	Standard Duty Down Pressure Springs (Not Recommended with Row Unit Mounted Attachments)	7	526.00
23-KB10	6400027	Without Down Pressure Springs		No Charge
◆◆**Dealer Installed**◆◆		**PNEUMATIC DOWN PRESSURE - Order One per Planter**		**Optional**
	6001842	Pneumatic Down Pressure (4 Row Set) Order One per 4 Rows **Requires Compressor and Hose**		896.00
	6001466	Pneumatic Down Pressure Compressor	20	844.00
	6001370	Pneumatic Down Pressure Hose (100 Feet) (Will Plumb Up to 12 Rows)		181.00

ORDER CODE	CATALOG NUMBER	DESCRIPTION	APPROX. WEIGHT (lb.)	LIST PRICE

➢➢Factory Installed➣➣ ROW UNIT MOUNTED TILLAGE - Order One per Planter Required

Heavy Duty Down Pressure Springs or Pneumatic Down Pressure Recommended

6 Row Planters

25-VA10	6400021	Without Unit Mounted Tillage Attachment		No Charge
25-VA13	6400555	Tillage Coulter with Ripple Blade	41	1,897.00
25-VA15	6400571	Tillage Coulter with 13 Flute Blade	41	1,897.00
25-VA18	6400579	Tillage Coulter with 25 Flute Blade	41	1,897.00
25-VA16	6400871	Residue Manager - Finger Wheel 13-inch Steel Wheel with 16 Fingers (For Use without Tillage Coulters)	37	2,304.00
25-VA19	6400872	Residue Manager - SharkTooth® Wheel 13-inch Steel Wheel with 12 Teeth (For Use without Tillage Coulters)		2,488.00
25-VA20	6400873	Floating Residue Manager - SharkTooth® Wheel with Depth Band, 13-inch Steel Wheel with 12 Teeth (For Use without Tillage Coulters)		3,373.00
25-VA11	6400539	Tillage Coulter without Blade (Order Coulter Blades from 9000 Series Dealer Installed Section)		1,636.00

8 Row Planters

25-VA10	6400021	Without Unit Mounted Tillage Attachment		No Charge
25-VA13	6400556	Tillage Coulter with Ripple Blade	41	2,530.00
25-VA15	6400572	Tillage Coulter with 13 Flute Blade	41	2,530.00
25-VA18	6400580	Tillage Coulter with 25 Flute Blade	41	2,530.00
25-VA16	6400984	Residue Manager - Finger Wheel 13-inch Steel Wheel with 16 Fingers (For Use without Tillage Coulters)	37	3,072.00
25-VA19	6400985	Residue Manager - SharkTooth® Wheel 13-inch Steel Wheel with 12 Teeth (For Use without Tillage Coulters)		3,319.00
25-VA20	6400986	Floating Residue Manager - SharkTooth® Wheel with Depth Band, 13-inch Steel Wheel with 12 Teeth (For Use without Tillage Coulters)		4,498.00
25-VA11	6400540	Tillage Coulter without Blade (Order Coulter Blades from 9000 Series Dealer Installed Section)		2,182.00

ORDER CODE	CATALOG NUMBER	DESCRIPTION	APPROX. WEIGHT (lb.)	LIST PRICE

➢➢Factory Installed≺≺ COMBINATION RESIDUE MANAGER - Order 1 per Planter — Optional

Requires Factory Installed Row Unit Mounted Tillage Coulter (VA13, VA15, VA18 or VA11)
Recommend Heavy Duty Down Pressure Springs or Pneumatic Down Pressure

6 Row Planters

26-K102	6400595	Residue Manager Attachment 10-inch Steel Wheel with 16 Fingers and Bearing Shields	42	2,304.00
26-K103	6400603	Residue Manager Attachment 13-inch Steel Wheel with 16 Fingers and Bearing Shields	42	2,304.00
26-K104	6400611	Residue Manager Attachment 13-inch Steel SharkTooth® Wheel with 12 Teeth		2,470.00

8 Row Planters

26-K102	6400596	Residue Manager Attachment 10-inch Steel Wheel with 16 Fingers and Bearing Shields	42	3,072.00
26-K103	6400604	Residue Manager Attachment 13-inch Steel Wheel with 16 Fingers and Bearing Shields	42	3,072.00
26-K104	6400612	Residue Manager Attachment 13-inch Steel SharkTooth® Wheel with 12 Teeth		3,047.00

◆◆Dealer Installed◆◆ GRANULAR INSECTICIDE ATTACHMENT — Optional

Granular Insecticide Attachment - Order One Per Two Rows

NOTE: Not for use with Flex Shaft Seed Meter Drive or Row Unit Lock-up Option

	6001843	Granular Insecticide Kit with Brackets For use with 2 Bushel Hoppers Only (Not for use with 3 Bushel Hoppers)	1,236.00

◆◆Dealer Installed◆◆ GRANULAR FERTILIZER ATTACHMENT — Optional

Granular Fertilizer Attachment (Without Openers)

How to Order Granular Fertilizer Attachment:

1. Order Granular Fertilizer Attachment
2. Order Fertilizer Openers, if desired. See page 11
3. Order Bar Extension Brackets, if necessary

Granular Fertilizer Attachment (Includes Fertilizer Drive) - Order One Per Planter

	6001272	Granular Fertilizer Attachment for 6 Row Planter (Includes 3 Hoppers, 500 lbs each)	369	2,983.00
	6001266	Granular Fertilizer Attachment for 8 Row Planter (Includes 4 Hoppers, 500 lbs each)	481	3,673.00

ORDER CODE	CATALOG NUMBER	DESCRIPTION	APPROX. WEIGHT (lb.)	LIST PRICE

◆◆Dealer Installed◆◆ LIQUID FERTILIZER ATTACHMENT — Optional

Liquid Fertilizer Attachment (Without Openers)

How To Order Liquid Fertilizer Attachment:

1. Order Tank Package
2. Order Pump and Drive Parts
3. Order Plumbing Kit
4. For Piston Pump Only, Order Flow Divider or Outlet Manifold
5. Order Opener Hose
6. Order Fertilizer Openers, if desired. See page 11
7. Order Bar Extension Brackets, if necessary

Liquid Fertilizer Tanks and Mounting Brackets - Order One per Planter

6001182	(2) 150 Gallon Tanks and Float Valves for 6 Row and 8 Row Planters	413	2,410.00

Fertilizer Pumps and Drives - Order One per Planter

6000452	Squeeze Pump and Drive for 6 Row Planter	84	1,791.00
6000453	Squeeze Pump and Drive for 8 Row Planter	129	2,050.00
6001221	Single Piston Pump and Contact Wheel Drive		2,983.00

Pump Plumbing Kit - Order One per Planter

Includes Hoses, Fittings, and Quick Fill Coupler and an Additional Quick Fill Coupler for 8 Row

6001274	Squeeze Pump Plumbing for 6 Row Planter	30	436.00
6001268	Squeeze Pump Plumbing for 8 Row Planter	35	702.00
6001276	Single Piston Pump Plumbing for 6 Row Planter	35	719.00
6001270	Single Piston Pump Plumbing for 8 Row Planter	40	1,014.00

Flow Divider or Outlet Manifold Completing Package - Order One per Planter

Required for Piston Pump Only

6100199	12 Row Flow Divider for 6 Row and 8 Row Planters		1,958.00
6100194	Outlet Manifold (with Orifices and Check Valves) for 6 Row and 8 Row Planters		743.00

Liquid Fertilizer Opener Hose - Order One Roll for 6 Row Planters and Two Rolls for 8 Row Planters

6100200	Roll of Fertilizer Opener Hose, 3/8 inch x 48 Feet		92.00

ORDER CODE	CATALOG NUMBER	DESCRIPTION	APPROX. WEIGHT (lb.)	LIST PRICE

◆◆Dealer Installed◆◆ FERTILIZER OPENERS — Optional

Fertilizer Openers for Granular Fertilizer - Order One Per Two Row Units

6000526	Single Disc Fertilizer Opener - Dry Side Knife		1,308.00
6000535	Single Disc Fertilizer Opener (25 Wave) Dry Trailing Knife with Multi Wave Blade		1,293.00
6000356	Single Disc Fertilizer Opener (50 Wave) Dry Trailing Knife with Ripple Blade (Includes One Right and One Left Hand Coulter)	186	1,319.00

Fertilizer Openers for Liquid Fertilizer - Order One Per Two Row Units

6000525	Single Disc Fertilizer Opener - Liquid Injector (Requires Orifice Tip or Nozzle to Complete - Source Locally)		1,293.00
6000527	Single Disc Fertilizer Opener - Liquid Side Knife		1,293.00
6000534	Single Disc Fertilizer Opener (25 Wave) Liquid Trailing Knife with Multi Wave Blade		1,293.00
6000355	Single Disc Fertilizer Opener (50 Wave) Liquid Trailing Knife with Ripple Blade (Includes One Right and One Left Hand Coulter)	176	1,319.00

Fertilizer Openers for Granular or Liquid - Order One Per Two Row Units

6100459	Double Disc Opener - 13-1/2 inch Diameter.	75	803.00

Fertilizer Opener Brackets - Order One per Planter

6001150	Bracket Set for Single Disc Fertilizer Openers.	28	122.00

Bracket Chart for Single Disc Fertilizer Openers (Double Disc Openers do not Require Brackets)

MODEL	Without Tillage Attachments	Row Unit Mounted			Frame Mounted	
		Residue Mgr or Trash Master	Tillage Coulters Only	Tillage Coulters & Residue Mgr Combination	Tillage Coulters Only	Tillage Coulters & Residue Mgr Combination
9100 Rigid Frame	6001150	6001150	6001150	6001150	6001150	6001150

RESERVED

9180 Forward Fold Planters

9180 Forward Fold Planters

F.O.B. Hesston, Kansas

STANDARD EQUIPMENT

- 7" x 7" Forward Folding Frame with Flex in the Center, with Hydraulic Cylinders and Hoses
- Hydraulic Lift with all Cylinders, Hoses and Transport Lock-Up
- Fertilizer Bar, 3 x 3 Tube
- Planter Units with: Air Metering, Chain Drive Seed Meter, 16" Double Disc Openers, 4.5"x 16" Walking Beam Gauge Wheels
- Seed Drain Kit
- Direct Drive Quick Couplers
- Central Blower, Manifold, Flow Control Valve and Air Pressure Gauge
- Transport Wheels with 9.5L-15, 12 Ply Tires
- Drive Wheels with 9.5L-15, 12 Ply Tires
- Category II-III Hitchbar
- Highway Transport Lighting
- Ground Drive - Two Transmissions

	# Rows	Spacing	Transport Width	Transport Wheels	Drive Wheels
Forward Folding Frames					
WP9182	12	30"	180"	2	2
WP9186	16	30"	180"	4	4

Ordering Instructions:
Planters are now available with many items Factory Installed.
Factory Installed items are not eligible for return to the factory.

1. Select One Order Code from Base, and One Order Code from Each Group as Required.
2. Order Required Seed Discs from 9000 Series Dealer Installed Section.
3. Additional Dealer Installed Items can be Ordered for these Models (such as Fertilizer Attachments) from this Chapter and from 9000 Series Dealer Installed Section.
4. Accepts Row Unit or Frame Mounted Tillage Attachments.

NOTE: Direct Drive requires 3 remote valves.

ORDER CODE	CATALOG NUMBER	DESCRIPTION	APPROX. WEIGHT (lb.)	LIST PRICE
FORWARD FOLD PLANTERS				
WP9182	9182903YH	12 Row 30-inch Planter	9290	52,103.00
WP9186	9186909YH	16 Row 30-inch Planter	13368	72,347.00

ORDER CODE	CATALOG NUMBER	DESCRIPTION	APPROX. WEIGHT (lb.)	LIST PRICE
MARKERS - Order One Set per Planter				**Required**
12 Row Planters				
2-P212	6400034	Flat Folding Break-Away Markers with Notched Marker Discs	931	6,500.00
2-P211	6400033	Folding Markers - Factory Installed		2,525.00
	6100094	Notched Marker Disc - Dealer Installed	41	458.00
2-P210	6400032	Without Markers.		No Charge
	6000362	Without Marker Disc		No Charge
16 Row Planters				
2-P212	6400229	Flat Folding Break-Away Markers with Gauge Wheel and Notched Marker Discs	1395	8,095.00
2-P211	6400036	Folding Markers - Factory Installed	325	5,000.00
	6100094	Notched Marker Disc - Dealer Installed	41	458.00
2-P210	6400035	Without Markers.		No Charge
	6000362	Without Marker Disc		No Charge

Notes on Ordering Markers:

1. 12 Row Planters Can Not be Equipped with Both Flat Fold Markers and Dry Fertilizer Because of Marker Stand and Hopper Interference.

➢➢Factory Installed➣➣ SEED HOPPERS AND METERS - Order One per Planter				**Required**
12 Row Planters				
5-HO12	6400886	Set of 12 Two-Bushel Hoppers and Meters	30	9,510.00
5-HO13	6400887	Set of 12 Three-Bushel Hoppers and Meters	35	11,152.00
5-HO10	6400903	Without Hoppers and Meters		No Charge
16 Row Planters				
5-HO12	6400799	Set of 16 Two-Bushel Hoppers and Meters	30	12,680.00
5-HO13	6400800	Set of 16 Three-Bushel Hoppers and Meters	35	14,869.00
5-HO10	6400802	Without Hoppers and Meters		No Charge

◆◆Dealer Installed◆◆ HYDRAULIC SUPPLY SYSTEM - Order One per Planter				**Optional**
3.3 GPM				
	6001047	3.3 GPM 540 RPM PTO Pump	37	1,524.00
	6001048	1000 RPM PTO Pump with 1-3/8 inch Spline Shaft	34	1,678.00
	6001049	1000 RPM PTO Pump with 1-3/4 inch Spline Shaft		1,678.00

➢➢Factory Installed➣➣ SEED TUBES AND SENSORS - Order One per Planter				**Required**
12 Row Planters				
16-P301	6400884	Seed Tubes with High Rate Sensors		2,202.00
16-P303	6400885	Seed Tubes with Seed Smart Sensors		3,615.00
16 Row Planters				
16-P301	6400814	Seed Tubes with High Rate Sensors		2,937.00
16-P303	6400815	Seed Tubes with Seed Smart Sensors		4,820.00

ORDER CODE	CATALOG NUMBER	DESCRIPTION	APPROX. WEIGHT (lb.)	LIST PRICE
➢➢Factory Installed➣➣ CLOSING SYSTEM - Order One per Planter				**Required**
NOTE: Angled Closing Wheels are factory installed in the staggered position with the left wheel forward and with two spacers under the wheels.				
12 Row Planters				
12-LR11	6400890	Angled Bracket with Rubber Closing Wheels	19	3,451.00
12-LR12	6400891	Angled Bracket with Cast Closing Wheels	54	3,972.00
12-LR14	6400423	Single “V” Trench Press Wheel	21	3,278.00
12-LR13	6400892	Angled Bracket without Closing Wheels (Order Closing Wheels from 9000 Series Dealer Installed Section)		1,948.00
12-LR10	6400803	Without Closing Wheels		No Charge
16 Row Planters				
12-LR11	6400804	Angled Bracket with Rubber Closing Wheels	19	4,600.00
12-LR12	6400807	Angled Bracket with Cast Closing Wheels	54	5,296.00
12-LR14	6401001	Single “V” Trench Press Wheel	21	4,370.00
12-LR13	6400806	Angled Bracket without Closing Wheel (Order Closing Wheels from 9000 Series Dealer Installed Section)		2,597.00
12-LR10	6400803	Without Closing Wheels		No Charge
◆◆Dealer Installed◆◆ MONITOR SYSTEM - Order One per Planter				**Required**
If Tractor is Equipped with ISO Terminal / Monitor, Order 6000100 and 6001214 Monitor Bridge Package from 9000 Series Dealer Installed Section.				
	6000807	SM400SE Seed Population Monitor (12 and 16 Rows)	25	2,324.00
	6000100	Without Monitor		No Charge
◆◆Dealer Installed◆◆ GROUND SPEED SENSOR - Order One per Planter				**Required**
	6000955	Magnetic Ground Speed Sensor	4	194.00
	6000923	Radar Ground Speed and Distance Sensing Gun	15	1,049.00
	6100064	Radar "Y" Harness (4 pin round tractor connector to 4 pin round monitor connector)		152.00
	6000810	Without Ground Speed and Distance Sensing (For Use with 6000100)		No Charge

Note: Part # 72515753 - Radar "Y" Harness
(4 pin flat tractor connector to a 4 pin round monitor connector)
(Above two "Y" Harnesses for tractors equipped with Radar Speed Sensing)

ORDER CODE	CATALOG NUMBER	DESCRIPTION	APPROX. WEIGHT (lb.)	LIST PRICE

➢➢Factory Installed➣➣ TRANSPORT WHEELS - Order One per Planter — Required with 12 Row

12 Row Planters Only

39-P501	6400011	Two Transport Wheels (Standard)		No Charge
39-P502	6400012	Four Transport Wheels (Two Standard Plus Additional Set of Two Transport Wheels)	1536	8,250.00

NOTE: Four Transport Wheels (29-P502 Factory Installed or 6001146 Dealer Installed) are Required When Optional Fertilizer Systems are Installed.

◆◆Dealer Installed◆◆ ADDITIONAL WHEELS - Order One per Planter — Optional

12 Row Planters Only

	6001146	Additional Set of Two Transport Wheels for 12-Row **NOTE:** Additional Set of Transport Wheels are required when Optional Fertilizer Tanks or Fertilizer Hoppers are Installed.	1536	7,107.00
	6001164	Additional Set of Drive Wheels for 12-Row **NOTE:** Additional Drive Wheels for 12-Row are required when Optional Fertilizer Tanks or Fertilizer Hoppers are Installed, and may be required for additional Drive and Carrying Support when operating in soft conditions.	569	2,930.00

➢➢Factory Installed➣➣ ADDITIONAL EQUIPMENT - Order One per Planter — Optional

33-BZ01	6400755	Blower Inlet Screen		99.00
34-A903	6400769	Transmission Shield		25.00
7-PS01	6400902	Row Unit Gauge Wheel Scrapers (12 Row)		420.00
7-PS01	6400816	Row Unit Gauge Wheel Scrapers (16 Row)		560.00
	71428520W	Ship Safe Preservative Coating (Recommended for Protection When Shipped in Winter Months)		604.00

ORDER CODE	CATALOG NUMBER	DESCRIPTION	APPROX. WEIGHT (lb.)	LIST PRICE
➢➢**Factory Installed**➣➣		**DOWN PRESSURE SYSTEM - Order One per Planter**		**Required**
12 Row Planters				
23-KB12	6400895	Heavy Duty Down Pressure Springs	12	2,432.00
23-KB11	6400894	Standard Duty Down Pressure Springs (Not Recommended with Row Unit Mounted Attachments)	7	789.00
23-KB10	6400027	Without Down Pressure Springs		No Charge
16 Row Planters				
23-KB12	6400811	Heavy Duty Down Pressure Springs	12	3,242.00
23-KB11	6400812	Standard Duty Down Pressure Springs (Not Recommended with Row Unit Mounted Attachments)	7	1,053.00
23-KB10	6400027	Without Down Pressure Springs		No Charge
➢➢**Factory Installed**➣➣		**ROW UNIT MOUNTED TILLAGE - Order One per Planter** **Heavy Duty Down Pressure Springs Recommended**		**Required**
12 Row Planters				
25-VA10	6400021	Without Unit Mounted Tillage Attachment		No Charge
25-VA16	6400896	Residue Manager - Finger Wheel 13-inch Steel Wheel with 16 Fingers (For Use without Tillage Coulters)	37	4,608.00
25-VA19	6400897	Residue Manager - SharkTooth® Wheel 13-inch Steel Wheel with 12 Teeth (For Use without Tillage Coulters)		4,978.00
25-VA20	6400898	Floating Residue Manager - SharkTooth® Wheel with Depth Band, 13-inch Steel Wheel with 12 Teeth (For Use without Tillage Coulters)		6,748.00
25-VA11	6400541	Tillage Coulter without Blade (Order Coulter Blades from 9000 Series Dealer Installed Section)		3,272.00
16 Row Planters				
25-VA10	6400021	Without Unit Mounted Tillage Attachment		No Charge
25-VA16	6400424	Residue Manager - Finger Wheel 13-inch Steel Wheel with 16 Fingers (For Use without Tillage Coulters)	37	6,145.00
25-VA19	6400439	Residue Manager - SharkTooth® Wheel 13-inch Steel Wheel with 12 Teeth (For Use without Tillage Coulters)		6,637.00
25-VA20	6400809	Floating Residue Manager - SharkTooth® Wheel with Depth Band, 13-inch Steel Wheel with 12 Teeth (For Use without Tillage Coulters)		8,996.00
25-VA11	6400542	Tillage Coulter without Blade (Order Coulter Blades from 9000 Series Dealer Installed Section)		4,362.00

ORDER CODE	CATALOG NUMBER	DESCRIPTION	APPROX. WEIGHT (lb.)	LIST PRICE
◆◆Dealer Installed◆◆		**ROW UNIT MOUNTED TILLAGE - Order One Per Row** **Heavy Duty Down Pressure Springs Recommended**		**Optional**
	6001691	Tillage Coulter with Bubble Blade	41	316.00
	6001692	Tillage Coulter with Ripple Blade	41	316.00
	6001693	Tillage Coulter with 8 Flute Blade	39	316.00
	6001694	Tillage Coulter with 7/8 inch - 13 Flute Blade	37	316.00
	6001695	Tillage Coulter with 25 Flute Blade		316.00
	6001658	Trash Masters - 12-inch Solid Blades	34	378.00
◆◆Dealer Installed◆◆		**RESIDUE MANAGERS - Order One Per Row** **Heavy Duty Down Pressure Springs Recommended**		**Optional**
	6001250	Residue Manager Attachment, 13-inch Steel Wheel with 16 Fingers and Bearing Shields (for use with Tillage Coulters above)	42	381.00
	6001249	Residue Manager Attachment, 10-inch Steel Wheel with 16 Fingers and Bearing Shields (for use with Tillage Coulters above)	42	384.00
	6001245	Residue Manager - SharkTooth® Wheel Attachment 13-inch Steel Wheel with 12 Teeth (for use with Tillage Coulters above)		412.00

ORDER CODE	CATALOG NUMBER	DESCRIPTION	APPROX. WEIGHT (lb.)	LIST PRICE

◆◆Dealer Installed◆◆ GRANULAR INSECTICIDE ATTACHMENT — Optional

Granular Insecticide Attachment - Order One Per Two Rows, unless otherwise noted

NOTE: Not for use with Flex Shaft Seed Meter Drive or Row Unit Lock-up Option

6001843	Granular Insecticide Kit with Brackets. . . . . For use with 2 Bushel Hoppers Only (Not for use with 3 Bushel Hoppers)		1,236.00
6001845	Extension Harness and Light Bracket Kit . . . . . Required for Models 9182 and 9186 Only **(Order One Per Planter)**		81.00

◆◆Dealer Installed◆◆ GRANULAR FERTILIZER - Order One per Planter — Optional

Granular Fertilizer Attachment (Without Openers)

How to Order Granular Fertilizer Attachment:

1. Order Granular Fertilizer Attachment
2. Order Fertilizer Openers and Brackets, if desired.
3. For 12 Row Only, Order Additional Transport Wheels Factory Installed # 29-P502 or Dealer Installed # 6001146
4. For 12 Row Only, Order Additional Drive Wheels # 6001164

Granular Fertilizer Attachment (Includes Fertilizer Drive) - Order One Per Planter

6001280	12 Row Granular Fertilizer Attachment . . . . . (Includes 2 Fertilizer Drives and 6 Hoppers, 500 lbs ea)	803	5,738.00
6001281	16 Row Granular Fertilizer Attachment . . . . . (Includes 2 Fertilizer Drives and 8 Hoppers, 500 lbs ea)	995	9,754.00

Note:

12 Row Planters Can Not be Equipped with Both Flat Fold Markers and Dry Fertilizer Because of Marker Stand and Hopper Interference.

ORDER CODE	CATALOG NUMBER	DESCRIPTION	APPROX. WEIGHT (lb.)	LIST PRICE

➢➢Factory and Dealer Installed◆◆ LIQUID FERTILIZER - Order One per Planter Optional

AVAILABLE FOR 16 ROW PLANTER ONLY

Factory Installed Items Are Not Eligible for Return to the Factory

Liquid Fertilizer Attachment (Without Openers)

How To Order Factory Installed Liquid Fertilizer Attachment:

(Flow Divider, Outlet Manifold, and Opener Hose are Dealer Installed)

1. Order Tank Package (Factory Installed) (Includes Float Valves, Supports, Top Tank Straps & Hardware)
2. For Piston Pump Only (UN23), Order Flow Divider or Outlet Manifold (Dealer Installed)
3. Order Opener Hose (Dealer Installed)
4. Order Fertilizer Openers and Bracket if desired (Dealer Installed) See page 23

➢➢Factory Installed≺≺ Liquid Fertilizer Tanks and Mounting Brackets - Order One per Planter

35-UN10	6400930	Without Liquid Fertilizer Tank Package		No Charge
35-UN02	6400082	(4) 150 Gallon Fertilizer Tanks	825	5,370.00
35-UN22	6400082	(4) 150 Gallon Fertilizer Tanks	825	5,370.00
	6400136	(2) Low Pressure Squeeze Pump and Contact Drives	325	4,751.00
	6400085	Plumbing Kit for Low Pressure Squeeze Pumps		1,700.00
35-UN23	6400082	(4) 150 Gallon Fertilizer Tanks	825	5,370.00
	6400084	Piston Pump and Fertilizer Contact Drive	125	2,983.00
	6400086	Plumbing Kit for Piston Pumps		1,550.00

◆◆Dealer Installed◆◆ Flow Divider or Outlet Manifold Completing Package - Order One per Planter

Required for Piston Pump Only

6000647	16 Row Flow Divider		2,865.00
6100219	16 Row Outlet Manifold (with Orifices and Check Valves)		1,484.00

◆◆Dealer Installed◆◆ Liquid Fertilizer Opener Hose - See Below for Order Quantity

6100200	Roll of Fertilizer Opener Hose, 3/8 inch x 48 Feet (4) Rolls Required for 16 Row Squeeze Pump (6) Rolls Required for 16 Row Piston Pump		92.00

ORDER CODE	CATALOG NUMBER	DESCRIPTION	APPROX. WEIGHT (lb.)	LIST PRICE

◆◆Dealer Installed◆◆ LIQUID FERTILIZER - Order One per Planter — Optional

AVAILABLE FOR 12 and 16 ROW PLANTER

Liquid Fertilizer Attachment (Without Openers)

How To Order Dealer Installed Liquid Fertilizer Attachment:

1. Order Tank Package
2. Order Pump and Drive Parts
3. Order Plumbing Kit
4. For Piston Pump Only, Order Flow Divider or Outlet Manifold
5. Order Opener Hose
6. Order Fertilizer Openers and Bracket if desired (Dealer Installed) See page 23

FOR 12 ROW ONLY

7. Order Additional Transport Wheels Factory Installed # 29-P502 or Dealer Installed # 6001146
8. Order Additional Drive Wheels # 6001164

Liquid Fertilizer Tanks and Mounting Brackets - Order One per Planter

6001185	(4) 150 Gallon Tanks (Includes Float Valves, Supports, Top Tank Straps and Hardware)	825	5,370.00

Fertilizer Pumps and Drives - Order One per Planter

6001279	(2) Low Pressure Squeeze Pump and Contact Drives	300	3,679.00
6001221	Single Piston Pump and Contact Wheel Drive	125	2,983.00

Pump Plumbing Kit - Order One per Planter

6001275	Plumbing Kit for Low Pressure Squeeze Pumps	1,104.00
6001277	Plumbing Kit for Piston Pumps	1,104.00

Plumbing Kits Include: Hoses, Fittings, and Quick Fill Coupler

Flow Divider or Outlet Manifold Completing Package - Order One per Planter

Required for Piston Pump Only

6100199	12 Row Flow Divider	1,958.00
6000647	16 Row Flow Divider	2,865.00
6100195	12 Row Outlet Manifold (with Orifices and Check Valves)	872.00
6100219	16 Row Outlet Manifold (with Orifices and Check Valves)	1,484.00

Liquid Fertilizer Opener Hose - See Below for Order Quantity

6100200	Roll of Fertilizer Opener Hose, 3/8 inch x 48 Feet (3) Rolls Required for 12 Row Squeeze Pump (4) Rolls Required for 12 Row Piston Pump (4) Rolls Required for 16 Row Squeeze Pump (6) Rolls Required for 16 Row Piston Pump	92.00

ORDER CODE	CATALOG NUMBER	DESCRIPTION	APPROX. WEIGHT (lb.)	LIST PRICE
◆◆Dealer Installed◆◆		**FERTILIZER OPENERS**		**Optional**
Fertilizer Openers for Granular Fertilizer - Order One Per Two Row Units				
	6000526	Single Disc Fertilizer Opener - Dry Side Knife		1,308.00
	6000535	Single Disc Fertilizer Opener (25 Wave) Dry Trailing Knife with Multi Wave Blade		1,293.00
	6000356	Single Disc Fertilizer Opener (50 Wave) Dry Trailing Knife with Ripple Blade (Includes One Right and One Left Hand Coulter)	186	1,319.00
Fertilizer Openers for Liquid Fertilizer - Order One Per Two Row Units				
	6000525	Single Disc Fertilizer Opener - Liquid Injector (Requires Orifice Tip or Nozzle to Complete - Source Locally)		1,293.00
	6000527	Single Disc Fertilizer Opener - Liquid Side Knife		1,293.00
	6000534	Single Disc Fertilizer Opener (25 Wave) Liquid Trailing Knife with Multi Wave Blade		1,293.00
	6000355	Single Disc Fertilizer Opener (50 Wave) Liquid Trailing Knife with Ripple Blade (Includes One Right and One Left Hand Coulter)	176	1,319.00
Fertilizer Openers for Granular or Liquid - Order One Per Two Row Units				
	6100459	Double Disc Opener - 13-1/2 inch Diameter.	75	803.00
Fertilizer Opener Brackets - Order One per Planter				
	6000609	Offset Shank Set for Single Disc Fertilizer Openers (Order One per Four(4) Rows)	101	240.00

Bracket Chart for Single Disc Fertilizer Openers (Double Disc Openers do not Require Brackets)

MODEL	Without Tillage Attachments	Row Unit Mounted			Frame Mounted	
		Residue Mgr or Trash Master	Tillage Coulters Only	Tillage Coulters & Residue Mgr Combination	Tillage Coulters Only	Tillage Coulters & Residue Mgr Combination
9180 (Dry Knife Requires Part # N852889, Adapter Tube)	6000609	6000609	6000609	6000609 (Only #6000526 & 6000527 Side Knife Can Be Used)	Can Not Be Used	

RESERVED

9200 Wing Fold Planters

9200 Wing Fold Planters

F.O.B. Hesston, Kansas

STANDARD EQUIPMENT

- 7" x 7" Rigid Frame or 7" x 7" Flex Frame
- Hydraulic Wing Fold Package
- Hydraulic Lift with all Cylinders, Hoses and Transport Lock-Up
- Planter Units with: Air Metering, Chain Drive Seed Meter, 16" Double Disc Openers, 4.5"x 16" Walking Beam Gauge Wheels
- ISO Seed Monitoring
- Direct Drive Quick Couplers
- Highway Transport Lighting
- Highway Transport Chain
- Transport Wheels with 9.5L-15, 12 Ply Tires
- Seed Drain Kit

Ground Drive Planters 9202, 9222

- Central Blower, Manifold, Flow Control Valve and Air Pressure Gauge
- Contact Tire Seed Drive Transmissions
  One transmission for Model 9202
  Two transmissions for Model 9222

Hydraulic Drive Planter (Optional for 9222)

- Central Blower, Manifold, Couplers for Direct Drive, Flow Control Valve and Air Pressure Gauge
  (Uses Tractor Hyd.- Requires min. 8 GPM @ 2000psi
  Consult Tractor Manufacturer to Verify Hydraulic Sys.)
- Micro Processor Controlled Variable Rate Hydraulic Drive

# Rows	Spacing	Center Frame	Wings	Transport Width	Transport Wheels	Total Wheels
Rigid & Flex Frames						
12	30"	188"	80"	196"	4	6

Ordering Instructions:
Planters are now available with many items Factory Installed.
Factory Installed items are not eligible for return to the factory.

1. Select One Order Code from Base, and One Order Code from Each Group as Required.
2. Order Required Seed Discs from 9000 Series Dealer Installed Section.
3. Additional Dealer Installed Items can be Ordered for these Models (such as Fertilizer Attachments) from this Chapter and from 9000 Series Dealer Installed Section.
4. Accepts Row Unit Mounted Tillage Attachments Only.

NOTE: Direct Drive requires 3 remote valves.

ORDER CODE	CATALOG NUMBER	DESCRIPTION	APPROX. WEIGHT (lb.)	LIST PRICE
WING FOLD PLANTERS				
WP9202	9202903YH	12 Row 30-inch Planter, Rigid Frame	7290	37,894.00
WP9222	9222903YH	12 Row 30-inch Planter, Flex Frame	8040	41,974.00

ORDER CODE	CATALOG NUMBER	DESCRIPTION	APPROX. WEIGHT (lb.)	LIST PRICE
➢➢**Factory Installed**➣➣		**MARKERS - Order One Set per Planter**		**Required**
2-P211	6400182	Folding Break-Away Markers for 9202 with Notched Marker Discs		5,721.00
2-P211	6400181	Folding Break-Away Markers for 9222 with Notched Marker Discs		5,721.00
2-P210	6400192	Without Markers.		No Charge
➢➢**Factory Installed**➣➣		**SEED HOPPERS AND METERS - Order One per Planter**		**Required**
5-HO12	6400886	Set of 12 Two-Bushel Hoppers and Meters	30	9,510.00
5-HO13	6400887	Set of 12 Three-Bushel Hoppers and Meters	35	11,152.00
5-HO10	6400903	Without Hoppers and Meters		No Charge
➢➢**Factory Installed**➣➣		**SEED METER DRIVE - Order One per Planter**		**Required**
3-D702	6400855	Flex Shaft Drive (with Electric Clutch for Each Row) (To Add Auto Row Shut-Off Feature, Order 6001396 C3000 Terminal / Monitor and 10 Hz or Stronger GPS Receiver)		6,900.00
3-D701	6400854	Chain Drive		No Charge

Notes on Ordering Flex Shaft
- Requires: 6001400 Communication Module below.
- Flex Shaft is Not Compatible with Section Control Half-Width Shut-Off or Standard Duty Down Pressure Springs

◆◆**Dealer Installed**◆◆		**Communication Module Required to Operate Flex Shaft Above**		**Optional**
	6001400	Communication Module with 6 Programmable Toggle Switches for use with Flex Shaft Seed Meter Drive. Six Toggle Switches Provide Manual Control for Six Sections		509.00

NOTE: The programmable communication module with toggle switches also provides manual back-up when using the Auto Row Shut-Off feature of the C3000 Terminal / Monitor if GPS signal is lost.

➢➢**Factory Installed**➣➣		**DRIVE - Order One per Planter**		**Required**
WP9202				
20-DO10	6400661	Ground Drive, Single Transmission (with Oil Coolers)		No Charge
WP9222				
20-DO12	6400662	Ground Drive, Dual Transmission (with Oil Coolers)		No Charge
20-DO11	6401088	Hydraulic Drive (without Oil Coolers)		5,266.00

Notes on Ordering Hydraulic Drive
Also Requires Radar Distance Sensing or Radar "Y" Harness from page 28

◆◆**Dealer Installed**◆◆		**HYDRAULIC SUPPLY SYSTEM - Order One per Planter**		**Optional**
3.3 GPM				
	6001047	540 RPM PTO Pump	37	1,524.00
	6001048	1000 RPM PTO Pump with 1-3/8 inch Spline Shaft	34	1,678.00
	6001049	1000 RPM PTO Pump with 1-3/4 inch Spline Shaft		1,678.00
➢➢**Factory Installed**➣➣		**SEED TUBES AND SENSORS - Order One per Planter**		**Required**
16-P301	6400884	Seed Tubes with High Rate Sensors		2,202.00
16-P303	6400885	Seed Tubes with Seed Smart Sensors		3,615.00

ORDER CODE	CATALOG NUMBER	DESCRIPTION	APPROX. WEIGHT (lb.)	LIST PRICE
➢➢**Factory Installed**➣➣		**CLOSING SYSTEM - Order One per Planter**		**Required**
		NOTE: Angled Closing Wheels are factory installed in the staggered position with the left wheel forward and with two spacers under the wheels.		
12-LR11	6400890	Angled Bracket with Rubber Closing Wheels	19	3,451.00
12-LR12	6400891	Angled Bracket with Cast Closing Wheels	54	3,972.00
12-LR14	6400423	Single "V" Trench Press Wheel	21	3,278.00
12-LR13	6400892	Angled Bracket Without Closing Wheels (Order Closing Wheels from 9000 Series Dealer Installed Section)		1,948.00
12-LR10	6400803	Without Closing Wheels		No Charge
◆◆**Dealer Installed**◆◆		**MONITOR SYSTEM - Order One per Planter**		**Required**
		Requires 6000923 Radar Ground Speed and Distance Sensing Gun or 6100064 Radar "Y" Harness. **For Use on Tractor with Radar.** **If Tractor is Equipped with ISO Terminal / Monitor, Order 6000993**		
	6001396	C3000 Terminal / Monitor		5,299.00
	6001313	C1000 Terminal / Monitor		2,803.00
	6000993	Without Monitor (Order only if Tractor is Equipped with an Existing ISO Terminal / Monitor)		No Charge
◆◆**Dealer Installed**◆◆		**GROUND SPEED SENSOR - Order One per Planter**		**Required**
	6000923	Radar Ground Speed and Distance Sensing Gun	15	1,049.00
	6100064	Radar "Y" Harness (4 pin round tractor connector to 4 pin round monitor connector)		152.00
	6000810	Without Ground Speed and Distance Sensing		No Charge
		Note: Part # 72515753 - Radar "Y" Harness (4 pin flat tractor connector to a 4 pin round monitor connector) (Above two "Y" Harnesses for tractors equipped with Radar Speed Sensing)		
➢➢**Factory Installed**➣➣		**SECTION CONTROL SHUT-OFF - Order One per Planter** **Requires 6001305 Controller below** **For use with Chain Drive Seed Meter Only** **For use with Ground Drive Only** **Not Compatible with Auto Row Shut-Off**		**Required**
For 9202				
32-7P01	6400353	Without Section Control Half-Width Shut-Off		No Charge
32-7P02	6400354	Section Control Half-Width Shut-Off (Includes 2 Clutches and Harness)	50	1,591.00
For 9222				
32-7P01	6400349	Without Section Control Half-Width Shut-Off, Ground Drive		No Charge
32-7P05	6401306	Without Section Control Half-Width Shut-Off, Hydraulic Drive		No Charge
32-7P02	6400350	Section Control Half-Width Shut-Off (Includes 2 Clutches and Harness)	50	1,591.00
◆◆**Dealer Installed**◆◆		**CONTROLLER - for Section Control Shut-Off**		**Optional**
	6001305	Section Control Shut-Off Controller (Required only with Factory Installed Section Control Shut-Off)		403.00

ORDER CODE	CATALOG NUMBER	DESCRIPTION	APPROX. WEIGHT (lb.)	LIST PRICE
➢➢Factory Installed➣➣		**DRIVE WHEEL MUD SCRAPERS - Order One per Planter**		**Optional**
Quantity 4 is Maximum Allowed per Planter for Factory and Dealer Installed Combined				
15-PH01	6400777	Drive Wheel Mud Scraper for the Transmission Drive Wheel (9202) (Includes One)		184.00
15-PH01	6400778	Drive Wheel Mud Scrapers for the Transmission Drive Wheel (9222) (Includes Two)		369.00
◆◆Dealer Installed◆◆		**DRIVE WHEEL MUD SCRAPER - Order One per Wheel**		**Optional**
	6001323	Drive Wheel Mud Scraper for the Transmission Drive Wheel (Order One for 9202, Order Two for 9222)		184.00
See above for the Maximum Quantity of Factory and Dealer Installed Combined				
➢➢Factory Installed➣➣		**ADDITIONAL EQUIPMENT - Order One per Planter**		**Optional**
33-BZ01	6400755	Blower Inlet Screen		99.00
7-PS01	6400902	Row Unit Gauge Wheel Scrapers		420.00
	71428520W	Ship Safe Preservative Coating (Recommended for Protection When Shipped in Winter Months)		604.00
➢➢Factory Installed➣➣		**DOWN PRESSURE SYSTEM - Order One per Planter**		**Required**
23-KB14	6400857	Pneumatic Down Pressure System **Requires 6001466 Compressor Below**	165	2,688.00
23-KB12	6400895	Heavy Duty Down Pressure Springs	12	2,432.00
23-KB11	6400894	Standard Duty Down Pressure Springs (Not Recommended with Row Unit Mounted Attachments) (Not Recommended with Flex Shaft Drive)	7	789.00
23-KB10	6400027	Without Down Pressure Springs		No Charge
◆◆Dealer Installed◆◆		**COMPRESSOR - Order One per Planter**		**Optional**
	6001466	Pneumatic Down Pressure Compressor (Required with Factory Installed only Pneumatic Down Pressure)	20	844.00

ORDER CODE	CATALOG NUMBER	DESCRIPTION	APPROX. WEIGHT (lb.)	LIST PRICE
➢➢Factory Installed➣➣ ROW UNIT MOUNTED TILLAGE - Order One per Planter				**Required**
Heavy Duty Down Pressure Springs or Pneumatic Down Pressure Recommended				
25-VA10	6400021	Without Unit Mounted Tillage Attachment		No Charge
25-VA13	6400557	Tillage Coulter with Ripple Blade	41	3,793.00
25-VA15	6400573	Tillage Coulter with 13 Flute Blade	37	3,793.00
25-VA18	6400581	Tillage Coulter with 25 Flute Blade		3,793.00
25-VA16	6400896	Residue Manager - Finger Wheel 13-inch Steel Wheel with 16 Fingers (For Use without Tillage Coulters)	37	4,608.00
25-VA19	6400897	Residue Manager - SharkTooth® Wheel 13-inch Steel Wheel with 12 Teeth (For Use without Tillage Coulters)		4,978.00
25-VA20	6400898	Floating Residue Manager - SharkTooth® Wheel with Depth Band, 13-inch Steel Wheel with 12 Teeth (For Use without Tillage Coulters)		6,748.00
25-VA11	6400541	Tillage Coulter without Blade (Order Coulter Blades from 9000 Series Dealer Installed Section)		3,272.00
➢➢Factory Installed➣➣ COMBINATION RESIDUE MANAGER - Order 1 per Planter				**Optional**
Requires Factory Installed Row Unit Mounted Tillage Coulter (VA13, VA15, VA18 or VA11) Recommend Heavy Duty Down Pressure Springs or Pneumatic Down Pressure				
26-K102	6400597	Residue Manager Attachment 10-inch Steel Wheel with 16 Fingers and Bearing Shields	42	4,608.00
26-K103	6400605	Residue Manager Attachment 13-inch Steel Wheel with 16 Fingers and Bearing Shields	42	4,608.00
26-K104	6400613	Residue Manager Attachment 13-inch Steel SharkTooth® Wheel with 12 Teeth		4,570.00
26-K101	6400589	Residue Manager without Spoke Wheels (Order Conversion Wheels from 9000 Series Dealer Installed Section)		1,145.00
◆◆Dealer Installed◆◆ GRANULAR INSECTICIDE ATTACHMENT				**Optional**
Granular Insecticide Attachment - Order One Per Two Rows				
NOTE: Not for use with Flex Shaft Seed Meter Drive or Row Unit Lock-up Option				
	6001843	Granular Insecticide Kit with Brackets For use with 2 Bushel Hoppers Only (Not for use with 3 Bushel Hoppers)		1,236.00

ORDER CODE	CATALOG NUMBER	DESCRIPTION	APPROX. WEIGHT (lb.)	LIST PRICE

➢➢Factory and Dealer Installed◆◆ LIQUID FERTILIZER - Order One per Planter Optional

Factory Installed Items Are Not Eligible for Return to the Factory

Liquid Fertilizer Attachment (Without Openers)

How To Order Factory Installed Liquid Fertilizer Attachment:

(Flow Divider, Outlet Manifold and Opener Hose are Dealer Installed)

1. Order Tank Package (Factory Installed)
2. Order Flow Divider or Outlet Manifold (Dealer Installed)
3. Order Fertilizer Openers as desired. (Factory Installed)
4. Order Opener Hose (Dealer Installed)

➢➢Factory Installed≺≺ Liquid Fertilizer Tanks and Mounting Brackets - Order One per Planter

For 9202 or 9222 - Tank Only Package

35-UN10	6400348	Without Liquid Fertilizer Tank Package		No Charge
35-UN02	6400355	(2) 200 Gallon Tanks (Includes Float Valves, Supports, Top Tank Straps and Hardware)	433	2,754.00

For 9202 - Tank and Plumbing Kit Package

35-UN21	6400355	(2) 200 Gallon Tanks (Includes Float Valves, Supports, Top Tank Straps and Hardware)	433	2,754.00
	6400347	Single Piston Pump and Contact Wheel Drive and Lock-up	125	2,983.00
	6400357	Plumbing Kit for Piston Pump		1,086.00

For 9222 - Tank and Plumbing Kit Package

35-UN21	6400355	(2) 200 Gallon Tanks (Includes Float Valves, Supports, Top Tank Straps and Hardware)	433	2,754.00
	6400347	Single Piston Pump and Contact Wheel Drive and Lock-up	125	2,983.00
	6400356	Plumbing Kit for Piston Pump		1,086.00

◆◆Dealer Installed◆◆ Liquid Fertilizer Plumbing

Flow Divider or Outlet Manifold Completing Package - Order One per Planter

Required for Piston Pump Only

	6100199	12 Row Flow Divider	1,958.00
	6100195	12 Row Outlet Manifold (with Orifices and Check Valves)	872.00

➢➢Factory Installed≺≺ Fertilizer Openers for Liquid Fertilizer - Order One per Planter

(Includes Mtg Brackets for Double Disc Openers and Mounting Brackets and Offset Shanks for Single Disc Openers)

19-K201	6400771	Double Disc Fertilizer Openers	6,766.00
19-K202	6400774	Liquid Side Knife Openers	9,847.00
19-K203	6400747	Liquid Injector Fertilizer Openers	9,847.00
19-K204	6400748	Liquid Trailing Knife Openers with Ripple Blade	9,847.00
19-K205	6400749	Liquid Trailing Knife Openers with 25 Flute Blade	9,847.00

Note: Single Disc Fertilizer Openers can not be used with Tillage/Coulter Residue Manager Combination

Liquid Fertilizer Opener Hose - Order Four Rolls

	6100200	Roll of Fertilizer Opener Hose, 3/8 inch x 48 Ft	92.00

ORDER CODE	CATALOG NUMBER	DESCRIPTION	APPROX. WEIGHT (lb.)	LIST PRICE

◆◆Dealer Installed◆◆LIQUID FERTILIZER - Order One per Planter — Optional

Liquid Fertilizer Attachment (Without Openers)

How To Order Dealer Installed Liquid Fertilizer Attachment:

1. Order Tank Package (Includes Float Valves, Supports, Top Tank Straps and Hardware)
2. Order Pump and Drive Parts
3. Order Plumbing Kit
4. Order Flow Divider or Outlet Manifold
5. Order Opener Hose
6. Order Fertilizer Openers and Brackets / Shanks if Desired

Liquid Fertilizer Tanks and Mounting Brackets - Order One per Planter

6001336	(2) 200 Gallon Tanks	433	2,754.00

Fertilizer Pumps and Drives - Order One per Planter

6001324	Piston Pump and Contact Wheel Drive	125	2,983.00
6001329	Contact Drive for Piston Pump (Pump not included)		1,464.00

Pump Plumbing Kit - Order One per Planter

6001337	Plumbing Kit for Piston Pump (Model 9202)	50	1,086.00
6001344	Plumbing Kit for Piston Pump (Model 9222)	50	1,086.00

Plumbing Kits Include: Hoses, Fittings, and Quick Fill Coupler

Flow Divider or Outlet Manifold Completing Package - Order One per Planter

Required for Piston Pumps Only

6100199	12 Row Flow Divider		1,958.00
6100195	12 Row Outlet Manifold (with Orifices and Check Valves)		872.00

Liquid Fertilizer Opener Hose - Order Four Rolls

6100200	Roll of Fertilizer Opener Hose, 3/8 inch x 48 Feet		92.00

Fertilizer Openers for Liquid Fertilizer - Order One Per Two Row Units

Note: Single Disc Fertilizer Openers can not be used with Tillage/Coulter Residue Manager Combination

6100459	Double Disc Opener - 13-1/2 inch Diameter	75	803.00
6000525	Single Disc Fertilizer Opener - Liquid Injector (Requires Orifice Tip or Nozzle to Complete - Source Locally)		1,293.00
6000527	Single Disc Fertilizer Opener - Liquid Side Knife		1,293.00
6000534	Single Disc Fertilizer Opener (25 Wave) Liquid Trailing Knife with Multi Wave Blade		1,293.00
6000355	Single Disc Fertilizer Opener (50 Wave) Liquid Trailing Knife with Ripple Blade (Includes One Right and One Left Hand Coulter)	176	1,319.00

Fertilizer Opener Brackets - See Chart on page 117 for Usage

6001106	Fertilizer Opener Bracket Set (RH and LH) (Order One per Two Rows)		323.00
6000609	Offset Shank Set for Single Disc Fertilizer Openers (Order One per Four Rows)	101	240.00

◆◆Dealer Installed◆◆ FERTILIZER DRIVE LOCK-UP - Order One per Planter — Optional

6001340	Fertilizer Drive Lock-Up		115.00

For use with 6001324, Piston Pump and Contact Wheel Drive or 6001329, Contact Drive

9500 Narrow Row Folding Planters

9500 Narrow Row Folding Planters

F.O.B. Hesston, Kansas

STANDARD EQUIPMENT

- 90 Bushel, 2 Section, Central Seed Hopper and Seed Distribution System
- 7" x 7" Forward Folding Frame with Hydraulic Cylinders, Hoses, and Frame Lock
- Hydraulic Lift with all Cylinders, Hoses and Transport Lock-Up
- Planter Units with: Air Metering, 16" Double Disc Openers, 4.5"x 16" Walking Beam Gauge Wheels, Cover and Meter Assemblies
- Chain Drive (Flex Drive not available for 9523 and 9531)
- Transport Wheels, with 31x13.5L-15, 12 Ply Tires
- Highway Transport Lighting
- Highway Transport Chain
- Seed Drain Kit
- Central Blower, Manifold, Flow Control Valve, Air Pressure, Gauge
- Micro Processor Controlled Variable Rate Hydraulic Drive

Requirements:

- Requires 3 Tractor Remotes if Using 10 GPM PTO Pump with 6.4 Gallon Reservoir (1 for Lift System, 1 for Frame Fold and Markers, and 1 for Central Fill Blower)
- Requires 4 Tractor Remotes If Using Direct Drive (1 for Seed Metering Blowers and Hydraulic Drive, 1 for Lift System, 1 for Frame Fold and Markers, and 1 for Central Fill Blower)
- Tractor Drawbar Reinforcement is recommended

Central Fill System (CFS) planters are designed for planting corn, soybeans, milo and popcorn. Large, Small, and Blank seed Meter Screens are Included with CFS.

# Rows	Spacing	Center Frame	Wings	Transport Width	Transport Wheels	Total Wheels
23	15”	194”	74”	200”	4	6
24	20"	194"	134"	195"	4	8
24	22"	168"	168"	188"	4	8
31	15"	194"	134"	200"	4	8

Ordering Instructions:
Planters are now available with many items Factory Installed.
Factory Installed items are not eligible for return to the factory.

1. Select One Order Code from Base, and One Order Code from Each Group as Required.
2. Order Required Seed Discs from 9000 Series Dealer Installed Section.
3. Additional Dealer Installed Items can be Ordered for these Models from this Chapter and from 9000 Series Dealer Installed Section.
4. Accepts Row Unit Mounted Tillage Attachments Only.

ORDER CODE	CATALOG NUMBER	DESCRIPTION	APPROX. WEIGHT (lb.)	LIST PRICE
NARROW ROW FOLDING PLANTERS				
WP9523	9523903YH	23 Row 15-inch Planter	16500	78,997.00
WP9524-20	9524906YH	24 Row 20-inch Planter	16725	97,542.00
WP9524-22	9524907YH	24 Row 22-inch Planter	17525	98,873.00
WP9531	9531903YH	31 Row 15-inch Planter	18475	94,886.00

ORDER CODE	CATALOG NUMBER	DESCRIPTION	APPROX. WEIGHT (lb.)	LIST PRICE
➢➢Factory Installed➣➣		**MARKERS AND MARKER DISCS - Order One per Planter**		**Required**
For 9523				
2-P215	6000866	Tri-Fold Break-Away Markers with Notched Marker Discs	1658	5,720.00
2-P210	6000864	Without Markers.		No Charge
For 9524-20 and 9531				
2-P215	6000857	Tri-Fold Markers with Notched Marker Discs	1631	11,451.00
2-P210	6000860	Without Markers.		No Charge
For 9524-22				
2-P215	6000858	Tri-Fold Markers with Notched Marker Discs	1658	11,590.00
2-P210	6000861	Without Markers.		No Charge
➢➢Factory Installed➣➣		**CENTRAL FILL SYSTEM - Order One per Planter**		**Required**
9523				
18-CF11	6400934	90 Bushel Central Fill System.		26,124.00
9524-20				
18-CF11	6400932	90 Bushel Central Fill System.		26,367.00
18-CF10	In Base	Without Central Fill, Order Seed Hoppers below		No Charge
9524-22				
18-CF11	6400933	90 Bushel Central Fill System.		27,652.00
18-CF10	In Base	Without Central Fill, Order Seed Hoppers below		No Charge
9531				
18-CF11	6400935	90 Bushel Central Fill System		32,049.00
➢➢Factory Installed➣➣		**SEED HOPPERS AND METERS - Order One per Planter Not Available for Models 9523 and 9531**		**Required**
9524-20				
5-HO12	6401042	Set of 24 Two-Bushel Hoppers and Meters	30	18,227.00
5-HO13	6401043	Set of 24 Three-Bushel Hoppers and Meters	35	21,375.00
5-HO10	6400834	Without Hoppers and Meters		No Charge
9524-22				
5-HO12	6401033	Set of 24 Two-Bushel Hoppers and Meters	30	19,020.00
5-HO13	6401039	Set of 24 Three-Bushel Hoppers and Meters	35	22,305.00
5-HO10	6400834	Without Hoppers and Meters		No Charge

ORDER CODE	CATALOG NUMBER	DESCRIPTION	APPROX. WEIGHT (lb.)	LIST PRICE
➢➢Factory Installed≺≺		**SEED METER DRIVE - Order One per Planter For 9524-20 and 9524-22 Only**		**Required**
9524-20				
3-D702	6400936	Flex Shaft Drive (for use with Auto Row Shut-Off) (Includes Electric Clutch for Each Row)		13,800.00
3-D701	6400939	Chain Drive Without Auto Row Shut-Off		No Charge
9524-22				
3-D702	6400937	Flex Shaft Drive (for use with Auto Row Shut-Off) (Includes Electric Clutch for Each Row)		13,800.00
3-D701	6400940	Chain Drive Without Auto Row Shut-Off		No Charge

Notes on Ordering Flex Shaft
- Requires: 6001400 Communication Module below.
- Flex Shaft is Not Compatible with Section Control Shut-Off Clutches or Standard Duty Down Pressure Springs
- To Add Auto Row Shut-Off Feature, Order 6001396 C3000 Terminal / Monitor and 10 Hz or Stronger GPS Receiver

◆◆Dealer Installed◆◆		**Communication Module Required to Operate Flex Shaft Above**		**Optional**
	6001400	Communication Module with 6 Programmable Toggle Switches for use with Flex Shaft Seed Meter Drive. Six Toggle Switches Provide Manual Control for Six Sections		509.00

Note: The programmable communication module with toggle switches also provide manual back-up when using the Auto Row Shut-Off feature of the C3000 Terminal / Monitor if GPS signal is lost.

➢➢Factory Installed≺≺		**HYDRAULIC SUPPLY SYSTEM - Order One per Planter (Also Order from PTO Pump Adapter Group below)**		**Required**
21-P807	6400000	10 GPM PTO Pump with 6.4 Gallon Reservoir		2,067.00
21-P802	6400001	Direct Drive and Hoses (Uses Existing Tractor Hydraulics)	30	148.00

◆◆Dealer Installed◆◆		**PTO PUMP ADAPTER - Order One per Planter**		**Required**
	6000747	1000 RPM PTO Pump Adapter for 1-3/4 inch Shaft		167.00
	6000748	1000 RPM PTO Pump Adapter for 1-3/8 inch Shaft		167.00
	6000777	Without PTO Pump Adapter (For Use with 21-P802)		No Charge

➢➢Factory Installed≺≺		**SEED TUBES AND SENSORS - Order One per Planter**		**Required**
For 23 Row				
16-P301	6401031	Seed Tubes with High Rate Sensors		4,221.00
16-P303	6401032	Seed Tube with Seed Smart Sensors		6,930.00
For 24 Row				
16-P301	6400832	Seed Tubes with High Rate Sensors		4,405.00
16-P303	6400833	Seed Tube with Seed Smart Sensors		7,231.00
For 31 Row				
16-P301	6401048	Seed Tubes with High Rate Sensors		5,690.00
16-P303	6401049	Seed Tube with Seed Smart Sensors		9,340.00

ORDER CODE	CATALOG NUMBER	DESCRIPTION	APPROX. WEIGHT (lb.)	LIST PRICE
➢➢Factory Installed➣➣ CLOSING SYSTEM - Order One per Planter				**Required**
NOTE: Angled Closing Wheels are factory installed in the staggered position with the left wheel forward and with two spacers under the wheels.				
9523				
12-LR11	6401035	Angled Bracket with Rubber Closing Wheels	19	6,613.00
12-LR12	6401036	Angled Bracket with Cast Closing Wheels	54	7,613.00
12-LR13	6401037	Angled Bracket Without Closing Wheels (Order Closing Wheels from 9000 Series Dealer Installed Section)		3,734.00
12-LR10	6400803	Without Closing Wheels		No Charge
9524				
12-LR11	6400838	Angled Bracket with Rubber Closing Wheels	19	6,900.00
12-LR12	6400839	Angled Bracket with Cast Closing Wheels	54	7,944.00
12-LR13	6400840	Angled Bracket Without Closing Wheels (Order Closing Wheels from 9000 Series Dealer Installed Section)		3,895.00
12-LR10	6400803	Without Closing Wheels		No Charge
9531				
12-LR11	6401052	Angled Bracket with Rubber Closing Wheels	19	8,913.00
12-LR12	6401053	Angled Bracket with Cast Closing Wheels	54	10,261.00
12-LR13	6401054	Angled Bracket Without Closing Wheels (Order Closing Wheels from 9000 Series Dealer Installed Section)		5,032.00
12-LR10	6400803	Without Closing Wheels		No Charge
◆◆Dealer Installed◆◆ MONITOR SYSTEM - Order One per Planter				**Required**
Requires 6000923 Radar Ground Speed and Distance Sensing Gun or Radar 'Y' Harness. For Use on Tractor with Radar.				
	6001396	C3000 Terminal / Monitor		5,299.00
	6001313	C1000 Terminal / Monitor		2,803.00
	6000993	Without Monitor (Order only if Tractor is Equipped with an Existing ISO Terminal / Monitor)		No Charge
◆◆Dealer Installed◆◆ GROUND SPEED SENSOR - Order One per Planter				**Required**
	6000923	Radar Ground Speed and Distance Sensing Gun	15	1,049.00
	6100064	Radar "Y" Harness (4 pin round tractor connector to 4 pin round monitor connector)		152.00
	6000810	Without Ground Speed and Distance Sensing (For Use with 6000993) (Uses Existing Radar)		No Charge

Note: Part # 72515753 - Radar "Y" Harness
(4 pin flat tractor connector to a 4 pin round monitor connector)
(Above Two "Y" Harnesses for tractors equipped with Radar Speed Sensing)

ORDER CODE	CATALOG NUMBER	DESCRIPTION	APPROX. WEIGHT (lb.)	LIST PRICE
➢➢**Factory Installed**➣➣		**SECTION CONTROL SHUT-OFF - Order One per Planter** **Not for use with Automatic Row Shut-Off** **Section Clutch Control incorporated in the Frame Fold Control Console**		**Required**
9523 and 9531				
32-7P01	6401056	Without Section Control Shut-Off		No Charge
32-7P02	6401050	Section Control Third-Width Shut-Off (Includes 3 Clutches and Harness)	50	2,758.00
9524-20				
32-7P01	6400364	Without Section Control Shut-Off		No Charge
32-7P02	6401058	Section Control Third-Width Shut-Off (Includes 3 Clutches and Harness)	50	2,758.00
9524-22				
32-7P01	6400008	Without Section Control Shut-Off		No Charge
32-7P02	6400007	Section Control Third-Width Shut-Off (Includes 3 Clutches and Harness)	50	2,758.00
➢➢**Factory Installed**➣➣		**ROW UNIT GAUGE WHEEL SCRAPERS - Order One per Planter**		**Optional**
7-PS01	6401059	Row Unit Gauge Wheel Scrapers, 9523		805.00
7-PS01	6400851	Row Unit Gauge Wheel Scrapers, 9524		840.00
7-PS01	6401060	Row Unit Gauge Wheel Scrapers, 9531		1,086.00
➢➢**Factory Installed**➣➣		**ADDITIONAL EQUIPMENT - Order One per Planter**		**Optional**
33-BZ01	6400756	Blower Inlet Screens (Not for Use with P802, Direct Drive)		198.00
	71428520W	Ship Safe Preservative Coating (Recommended for Protection When Shipped in Winter Months)		604.00

ORDER CODE	CATALOG NUMBER	DESCRIPTION	APPROX. WEIGHT (lb.)	LIST PRICE
➢➢Factory Installed➣➣		**DOWN PRESSURE SYSTEM - Order One per Planter**		**Required**
9523				
23-KB14	6400944	Pneumatic Down Pressure System **Requires 6001466 Compressor Below**	165	5,153.00
23-KB12	6401040	Heavy Duty Down Pressure Springs	12	4,661.00
23-KB10	6400027	Without Down Pressure Springs		No Charge
9524-20				
23-KB14	6400947	Pneumatic Down Pressure System **Requires 6001466 Compressor Below**	165	5,377.00
23-KB12	6400843	Heavy Duty Down Pressure Springs	12	4,864.00
23-KB11	6400842	Standard Duty Down Pressure Springs (Not Recommended with Row Unit Mounted Attachments)	7	1,579.00
23-KB10	6400027	Without Down Pressure Springs		No Charge
9524-22				
23-KB14	6400946	Pneumatic Down Pressure System **Requires 6001466 Compressor Below**	165	5,377.00
23-KB12	6400843	Heavy Duty Down Pressure Springs	12	4,864.00
23-KB11	6400842	Standard Duty Down Pressure Springs (Not Recommended with Row Unit Mounted Attachments)	7	1,579.00
23-KB10	6400027	Without Down Pressure Springs		No Charge
9531				
23-KB14	6400945	Pneumatic Down Pressure System **Requires 6001466 Compressor Below**	165	6,945.00
23-KB12	6401057	Heavy Duty Down Pressure Springs	12	6,282.00
23-KB10	6400027	Without Down Pressure Springs		No Charge
◆◆Dealer Installed◆◆		**COMPRESSOR - Order One per Planter**		**Optional**
	6001466	Pneumatic Down Pressure Compressor (Required with Factory Installed only Pneumatic Down Pressure)		844.00

ORDER CODE	CATALOG NUMBER	DESCRIPTION	APPROX. WEIGHT (lb.)	LIST PRICE
➢➢**Factory Installed**➣➣		**ROW UNIT MOUNTED TILLAGE - Order One per Planter**		**Required**
Heavy Duty Down Pressure Springs or Pneumatic Down Pressure Recommended				
9523				
25-VA10	6400021	Without Unit Mounted Tillage Attachment		No Charge
25-VA13	6400559	Tillage Coulter with Ripple Blade	41	7,272.00
25-VA15	6400575	Tillage Coulter with 13 Flute Blade	37	7,272.00
25-VA18	6400583	Tillage Coulter with 25 Flute Blade		7,272.00
25-VA11	6400543	Tillage Coulter without Blade (Order Coulter Blades from 9000 Series Dealer Installed Section)		6,271.00
On 30" Row Width - Not Interplant Rows				
25-VA16	6400896	Residue Manager - Finger Wheel 13-inch Steel Wheel with 16 Fingers (For Use without Tillage Coulters)	37	4,608.00
25-VA19	6400897	Residue Manager - SharkTooth® Wheel 13-inch Steel Wheel with 12 Teeth (For Use without Tillage Coulters)		4,978.00
25-VA20	6400898	Floating Residue Manager - SharkTooth® Wheel with Depth Band, 13-inch Steel Wheel with 12 Teeth (For Use without Tillage Coulters)		6,748.00
9524				
25-VA10	6400021	Without Unit Mounted Tillage Attachment		No Charge
25-VA13	6400560	Tillage Coulter with Ripple Blade	41	7,588.00
25-VA15	6400576	Tillage Coulter with 13 Flute Blade	37	7,588.00
25-VA18	6400584	Tillage Coulter with 25 Flute Blade		7,588.00
25-VA11	6400544	Tillage Coulter without Blade (Order Coulter Blades from 9000 Series Dealer Installed Section)		6,544.00
25-VA16	6400845	Residue Manager - Finger Wheel 13-inch Steel Wheel with 16 Fingers (For Use without Tillage Coulters)	37	9,217.00
25-VA19	6400846	Residue Manager - SharkTooth® Wheel 13-inch Steel Wheel with 12 Teeth (For Use without Tillage Coulters)		9,956.00
25-VA20	6400847	Floating Residue Manager - SharkTooth® Wheel with Depth Band, 13-inch Steel Wheel with 12 Teeth (For Use without Tillage Coulters)		13,495.00
9531				
25-VA10	6400021	Without Unit Mounted Tillage Attachment		No Charge
25-VA13	6400561	Tillage Coulter with Ripple Blade	41	9,800.00
25-VA15	6400577	Tillage Coulter with 13 Flute Blade	37	9,800.00
25-VA18	6400585	Tillage Coulter with 25 Flute Blade		9,800.00
25-VA11	6400545	Tillage Coulter without Blade (Order Coulter Blades from 9000 Series Dealer Installed Section)		8,452.00
On 30" Row Width - Not Interplant Rows				
25-VA16	6400424	Residue Manager - Finger Wheel 13-inch Steel Wheel with 16 Fingers (For Use without Tillage Coulters)	37	6,145.00
25-VA19	6400439	Residue Manager - SharkTooth® Wheel 13-inch Steel Wheel with 12 Teeth (For Use without Tillage Coulters)		6,637.00
25-VA20	6400809	Floating Residue Manager - SharkTooth® Wheel with Depth Band, 13-inch Steel Wheel with 12 Teeth (For Use without Tillage Coulters)		8,996.00

ORDER CODE	CATALOG NUMBER	DESCRIPTION	APPROX. WEIGHT (lb.)	LIST PRICE

➢➢Factory Installed➣➣ COMBINATION RESIDUE MANAGER - Order 1 per Planter — Optional

Requires Factory Installed Row Unit Mounted Tillage Coulter (VA13, VA15, VA18 or VA11)
Recommend Heavy Duty Down Pressure Springs or Pneumatic Down Pressure

9523

26-K102	6400597	Residue Manager Attachment 10-inch Steel Wheel with 16 Fingers and Bearing Shields	4,608.00
26-K103	6400605	Residue Manager Attachment 13-inch Steel Wheel with 16 Fingers and Bearing Shields	4,608.00
26-K104	6400613	Residue Manager Attachment 13-inch Steel SharkTooth® Wheel with 12 Teeth	4,570.00
26-K101	6400589	Residue Manager without Spoke Wheels (Order Conversion Wheels from 9000 Series Dealer Installed Section)	1,145.00

9524

26-K102	6400600	Residue Manager Attachment 10-inch Steel Wheel with 16 Fingers and Bearing Shields	9,217.00
26-K103	6400608	Residue Manager Attachment 13-inch Steel Wheel with 16 Fingers and Bearing Shields	9,217.00
26-K104	6400616	Residue Manager Attachment 13-inch Steel SharkTooth® Wheel with 12 Teeth	9,140.00
26-K101	6400592	Residue Manager without Spoke Wheels (Order Conversion Wheels from 9000 Series Dealer Installed Section)	2,292.00

9531

26-K102	6400598	Residue Manager Attachment 10-inch Steel Wheel with 16 Fingers and Bearing Shields	6,145.00
26-K103	6400606	Residue Manager Attachment 13-inch Steel Wheel with 16 Fingers and Bearing Shields	6,145.00
26-K104	6400614	Residue Manager Attachment 13-inch Steel SharkTooth® Wheel with 12 Teeth	6,093.00
26-K101	6400590	Residue Manager without Spoke Wheels (Order Conversion Wheels from 9000 Series Dealer Installed Section)	1,527.00

◆◆Dealer Installed◆◆ GRANULAR INSECTICIDE ATTACHMENT — Optional

Granular Insecticide Attachment - Order One Per Two Rows

NOTE: Not for use with Flex Shaft Seed Meter Drive or Row Unit Lock-up Option

6001843	Granular Insecticide Kit with Brackets. For use with 2 Bushel Hoppers Only (Not for use with 3 Bushel Hoppers)	1,236.00
6001844	Granular Insecticide Kit with Brackets. For use with CFS Mini-Hoppers Only (Not for use with 2 or 3 Bushel Hoppers)	1,236.00

NOTE: Liquid Fertilizer Attachments are *NOT* available for these models.

RESERVED

9700 Toolbar Mounted Planters

9700 Toolbar Mounted Planters

F.O.B. Hesston, Kansas

STANDARD EQUIPMENT

- 7" x 7" Rigid Toolbar Frame or 7" x 7" Vertical Folding Toolbar Frame w/ Hydraulic Cylinders, Hoses & Lock-Up
- Planter Units with: Air Metering, Chain Drive Seed Meter, 16" Double Disc Openers, 4.5"x 16" Walking Beam Gauge Wheels
- Direct Drive Quick Couplers
- Fixed Drive Wheels with 9.5L-15, 6 Ply Tires
- Adjustable Hitch for Category II or III
- Parking Stands
- Highway Transport Lighting; Highway Transport Chain
- Seed Drain Kit

Ground Drive Planters (8 Row):
- Central Blower, Manifold, Flow Control Valve and Air Pressure Gauge, High Rate Seed Sensors

Ground Drive Planters (12 Row):
- Central Blower, Manifold, Flow Control Valve and Air Pressure Gauge

Hydraulic Drive Planter (Optional for 12 Row):
- Central Blower, Manifold, Couplers for Direct Drive, Flow Control Valve and Air Pressure Gauge (Uses Tractor Hyd.- Requires min. 8 GPM @ 2000psi Consult Tractor Manufacturer to Verify Hydraulic Sys.)
- Micro Processor Controlled Variable Rate Hydraulic Drive

	# Rows	Spacing	Center Frame	Wings	Transport Width	Wheels
Rigid Frames						
	8	30"	228"	—-	248"	2 Drive Wheels
	12	30"	348"	—-	368"	4 Drive Wheels (Ground Drive) 2 Gauge Wheels (Hydraulic Drive)
Vertical Folding Frames						
	12	30"	169"	99"	256"	4 Drive Wheels (Ground Drive) 4 Gauge Wheels (Hydraulic Drive)

Ordering Instructions:
Planters are now available with many items Factory Installed.
Factory Installed items are not eligible for return to the factory.

1. Select One Order Code from Base, and One Order Code from Each Group as Required.
2. Order Required Seed Discs from 9000 Series Dealer Installed Section.
3. Additional Dealer Installed Items can be Ordered for these Models from this Chapter and from 9000 Series Dealer Installed Section.
4. Accepts Row Unit or Frame Mounted Tillage Attachments.

NOTE: Direct Drive requires 2 remote valves for rigid frames and 3 remote valves for folding frames.

ORDER CODE	CATALOG NUMBER	DESCRIPTION	APPROX. WEIGHT (lb.)	LIST PRICE
TOOLBAR MOUNTED PLANTERS				
WP9708	9708904YH	8 Row 30-inch Planter, Rigid Frame	4635	19,070.00
WP9702	9702903YH	12 Row 30-inch Planter, Rigid Frame	6659	24,932.00
WP9722	9722903YH	12 Row 30-inch Planter, Vertical Folding Frame	6584	34,661.00

ORDER CODE	CATALOG NUMBER	DESCRIPTION	APPROX. WEIGHT (lb.)	LIST PRICE
MARKERS - Order One Set per Planter				**Required**
8-Row Rigid Frame Planter 9708				
2-P211	6000273	Folding Markers - Factory Installed	250	3,000.00
	6100094	Notched Marker Disc - Dealer Installed	41	458.00
	6001169	Flat Fold Break-Away Markers - Dealer Installed	1000	5,447.00
2-P202	6000274	Without Markers.		No Charge
	6000362	Without Marker Disc		No Charge
12-Row Rigid Frame Planter 9702				
2-P211	6000275	Folding Markers - Factory Installed	433	2,548.00
	6100094	Notched Marker Disc - Dealer Installed	41	458.00
	6001170	Flat Fold Break-Away Markers - Dealer Installed	1000	6,110.00
2-P202	6000276	Without Markers.		No Charge
	6000362	Without Marker Disc		No Charge
12-Row Vertical Fold Planter 9722				
2-P211	6000823	Folding Markers - Factory Installed	433	2,548.00
	6100094	Notched Marker Disc - Dealer Installed	41	458.00
2-P202	6000824	Without Markers.		No Charge
	6000362	Without Marker Disc		No Charge
SEED HOPPERS AND METERS - See Order Requirements Below				**Required**
8-Row Planter 9708				
5-HO12	6400981	Set of 8 Two-Bushel Hoppers and Meters - Factory Installed **Order One per Planter**	30	6,340.00
	6001647	Three-Bushel Hopper and Meter - Dealer Installed **Order One per Row**	35	929.00
5-HO10	6400880	Without Hoppers and Meters **Order One per Planter**		No Charge
12-Row Planter 9702				
5-HO12	6400886	Set of 12 Two-Bushel Hoppers and Meters - Factory Installed **Order One per Planter**	30	9,510.00
	6001647	Three-Bushel Hopper and Meter - Dealer Installed **Order One per Row**	35	929.00
5-HO10	6400903	Without Hoppers and Meters **Order One per Planter**		No Charge
12-Row Planter 9722				
5-HO12	6400886	Set of 12 Two-Bushel Hoppers and Meters - Factory Installed **Order One per Planter**	30	9,510.00
5-HO10	6400903	Without Hoppers and Meters **Order One per Planter**		No Charge

ORDER CODE	CATALOG NUMBER	DESCRIPTION	APPROX. WEIGHT (lb.)	LIST PRICE
➢➢Factory Installed≺≺ DRIVE - for 12 Row Planters Only - Order One per Planter				**Required**
(8 Row Planter is Ground Drive only)				
12-Row Rigid Frame Planters 9702				
20-DO10	6400105	Ground Drive		No Charge
20-DO11	6401149	Hydraulic Drive	40	6,320.00
12-Row Planters - Vertical Fold 9722				
20-DO10	6400107	Ground Drive		No Charge
20-DO11	6401149	Hydraulic Drive	40	6,320.00

Notes on Ordering Hydraulic Drive
Also Requires Radar Distance Sensing or Radar "Y" Harness from Ground Speed Sensor Group

◆◆Dealer Installed◆◆ HYDRAULIC SUPPLY SYSTEM - Order One per Planter				**Optional**
For use with Ground Drive Only				
3.3 GPM				
	6001047	540 RPM PTO Pump	37	1,524.00
	6001048	1000 RPM PTO Pump with 1-3/8 inch Spline Shaft	34	1,678.00
	6001049	1000 RPM PTO Pump with 1-3/4 inch Spline Shaft		1,678.00

➢➢Factory Installed≺≺ SEED TUBES AND SENSORS - Order One per Planter				**Required**
8-Row Planter				
16-P301	6400879	Seed Tubes with High Rate Sensors		No Charge
12-Row Planters				
16-P301	6400884	Seed Tubes with High Rate Sensors		2,202.00
16-P303	6400885	Seed Tubes with Seed Smart Sensors (Requires SM400SE Seed Population Monitor, or C1000, or C3000 Terminal / Monitor)		3,615.00

◆◆Dealer Installed◆◆ CLOSING SYSTEM - Order One per Row				**Optional**
	6001650	Angled Bracket with Rubber Closing Wheels	19	287.00
	6001651	Angled Bracket with Cast Closing Wheels	54	331.00
	6001653	Single “V” Trench Press Wheel	21	273.00
	6001652	Angled Bracket without Closing Wheels (Order Closing Wheels from 9000 Series Dealer Installed Section)		163.00

ORDER CODE	CATALOG NUMBER	DESCRIPTION	APPROX. WEIGHT (lb.)	LIST PRICE
◆◆Dealer Installed◆◆ MONITOR SYSTEM - Order One per Planter				**Required**
For 6000100 or 6000805, must order 6000810 Without Ground Speed and Distance Sensing				
For 8 Row Ground Drive Planters				
	6000806	SM300 Seed Population Monitor (Up to 8 Rows) (Requires Magnetic Ground Speed Sensor or Radar Ground Speed and Distance Sensing Gun)	25	1,625.00
	6000805	SM100 Seed Flow Monitor (Up to 8 Rows)	20	1,194.00
	6000100	Without Monitor		No Charge
For 12 Row Ground Drive Planters				
If Tractor is Equipped with ISO Terminal / Monitor, Order 6000100 and 6001214 Monitor Bridge Package from 9000 Series Dealer Installed Section.				
	6000807	SM400SE Seed Population Monitor (12 and 16 Rows) (Requires Magnetic Ground Speed Sensor or Radar Ground Speed and Distance Sensing Gun)	25	2,324.00
	6000100	Without Monitor		No Charge
For 12 Row Hydraulic Drive Planter **Requires 6000923 Radar Ground Speed and Distance Sensing Gun or 6100064 Radar "Y" Harness.** **For Use on Tractor with Radar.**				
	6001396	C3000 Terminal / Monitor		5,299.00
	6001313	C1000 Terminal / Monitor		2,803.00
	6000993	Without Monitor (Order only if Tractor is Equipped with an Existing ISO Terminal / Monitor)		No Charge
◆◆Dealer Installed◆◆ GROUND SPEED SENSOR - Order One per Planter				**Required**
	6100059	Magnetic Ground Speed Sensor (8 rows)	4	160.00
	6000955	Magnetic Ground Speed Sensor (12 Row)		194.00
	6000923	Radar Ground Speed and Distance Sensing Gun	15	1,049.00
	6100064	Radar "Y" Harness (4 pin round tractor connector to 4 pin round monitor connector)		152.00
	6000810	Without Ground Speed and Distance Sensing (Uses Existing Radar) (For Use with 6000100, 6000805 or 6000993)		No Charge
Note: Part # 72515753 - Radar "Y" Harness (4 pin flat tractor connector to a 4 pin round monitor connector) (Above Two "Y" Harnesses for tractors equipped with Radar Speed Sensing)				
◆◆Dealer Installed◆◆ ADDITIONAL WHEELS - Order One per Planter				**Optional**
NOTE: Tractor must be able to be ballasted to carry the planter if lift assist wheels are not ordered.				
	6001192	Two Rear Lift-Assist Wheels	769	5,025.00
	6001193	Additional Set of (2) Drive Wheels (Includes 2 Drive / Gauge Wheel Assemblies, Clutches and Chains)		1,959.00
➢➢Factory Installed➣➣ ADDITIONAL EQUIPMENT - Order One per Planter				**Optional**
33-BZ01	6400755	Blower Inlet Screen		99.00
9-A903	6400768	Transmission Shield		25.00
7-PS01	6400989	Row Unit Gauge Wheel Scrapers (9708)		280.00
7-PS01	6400902	Row Unit Gauge Wheel Scrapers (9702 and 9722)		420.00
	71428520W	Ship Safe Preservative Coating (Recommended for Protection When Shipped in Winter Months)		604.00

ORDER CODE	CATALOG NUMBER	DESCRIPTION	APPROX. WEIGHT (lb.)	LIST PRICE
➢➢**Factory Installed**➣➣		**DOWN PRESSURE SYSTEM - Order One per Planter**		**Required**
8-Row Planter				
23-KB12	6400983	Heavy Duty Down Pressure Springs	12	1,621.00
23-KB11	6400982	Standard Duty Down Pressure Springs (Not Compatible with Row Unit Mounted Attachments)	7	526.00
23-KB10	6400027	Without Down Pressure Springs		No Charge
12-Row Planters				
23-KB12	6400895	Heavy Duty Down Pressure Springs	12	2,432.00
23-KB11	6400894	Standard Duty Down Pressure Springs (Not Compatible with Row Unit Mounted Attachments)	7	789.00
23-KB10	6400027	Without Down Pressure Springs		No Charge
◆◆**Dealer Installed**◆◆		**PNEUMATIC DOWN PRESSURE**		**Optional**
	6001842	Pneumatic Down Pressure (4 Row Set) Order One per 4 Rows **Requires Compressor and Hose**		896.00
	6001466	Pneumatic Down Pressure Compressor	20	844.00
	6001370	Pneumatic Down Pressure Hose (100 Feet) (Will Plumb Up to 12 Rows)		181.00

ORDER CODE	CATALOG NUMBER	DESCRIPTION	APPROX. WEIGHT (lb.)	LIST PRICE
➢➢**Factory Installed**➣➣ **ROW UNIT MOUNTED TILLAGE - Order One per Planter**				**Required**
Heavy Duty Down Pressure Springs or Pneumatic Down Pressure Recommended				
8-Row Planter				
25-VA10	6400021	Without Unit Mounted Tillage Attachment.		No Charge
25-VA13	6400556	Tillage Coulter with Ripple Blade	41	2,530.00
25-VA15	6400572	Tillage Coulter with 13 Flute Blade	41	2,530.00
25-VA18	6400580	Tillage Coulter with 25 Flute Blade	41	2,530.00
25-VA16	6400984	Residue Manager - Finger Wheel . . . . . 13-inch Steel Wheel with 16 Fingers (For Use without Tillage Coulters)	37	3,072.00
25-VA19	6400985	Residue Manager - SharkTooth® Wheel . . . . . 13-inch Steel Wheel with 12 Teeth (For Use without Tillage Coulters)		3,319.00
25-VA20	6400986	Floating Residue Manager - SharkTooth® Wheel . . . . . with Depth Band, 13-inch Steel Wheel with 12 Teeth (For Use without Tillage Coulters)		4,498.00
25-VA11	6400540	Tillage Coulter without Blade . . . . . (Order Coulter Blades from 9000 Series Dealer Installed Section)		2,182.00
12-Row Planters				
25-VA10	6400021	Without Unit Mounted Tillage Attachment.		No Charge
25-VA13	6400557	Tillage Coulter with Ripple Blade	41	3,793.00
25-VA15	6400573	Tillage Coulter with 13 Flute Blade	41	3,793.00
25-VA18	6400581	Tillage Coulter with 25 Flute Blade	41	3,793.00
25-VA16	6400896	Residue Manager - Finger Wheel . . . . . 13-inch Steel Wheel with 16 Fingers (For Use without Tillage Coulters)	37	4,608.00
25-VA19	6400897	Residue Manager - SharkTooth® Wheel . . . . . 13-inch Steel Wheel with 12 Teeth (For Use without Tillage Coulters)		4,978.00
25-VA20	6400898	Floating Residue Manager - SharkTooth® Wheel . . . . . with Depth Band, 13-inch Steel Wheel with 12 Teeth (For Use without Tillage Coulters)		6,748.00
25-VA11	6400541	Tillage Coulter without Blade . . . . . (Order Coulter Blades from 9000 Series Dealer Installed Section)		3,272.00

ORDER CODE	CATALOG NUMBER	DESCRIPTION	APPROX. WEIGHT (lb.)	LIST PRICE

➢➢Factory Installed➣➣ COMBINATION RESIDUE MANAGER - Order 1 per Planter — Optional

Requires Factory Installed Row Unit Mounted Tillage Coulter (VA13, VA15, VA18 or VA11)
Recommend Heavy Duty Down Pressure Springs or Pneumatic Down Pressure

8-Row Planter

26-K102	6400596	Residue Manager Attachment . . . . . 10-inch Steel Wheel with 16 Fingers and Bearing Shields	3,072.00
26-K103	6400604	Residue Manager Attachment . . . . . 13-inch Steel Wheel with 16 Fingers and Bearing Shields	3,072.00
26-K104	6400612	Residue Manager Attachment . . . . . 13-inch Steel SharkTooth® Wheel with 12 Teeth	3,047.00
26-K101	6400588	Residue Manager without Spoke Wheels . . . . . (Order Wheels from 9000 Series Dealer Installed Section)	764.00

12-Row Planters

26-K102	6400597	Residue Manager Attachment . . . . . 10-inch Steel Wheel with 16 Fingers and Bearing Shields	4,608.00
26-K103	6400605	Residue Manager Attachment . . . . . 13-inch Steel Wheel with 16 Fingers and Bearing Shields	4,608.00
26-K104	6400613	Residue Manager Attachment . . . . . 13-inch Steel SharkTooth® Wheel with 12 Teeth	4,570.00
26-K101	6400589	Residue Manager without Spoke Wheels . . . . . (Order Wheels from 9000 Series Dealer Installed Section)	1,145.00

◆◆Dealer Installed◆◆ GRANULAR INSECTICIDE ATTACHMENT — Optional

Granular Insecticide Attachment - Order One Per Two Rows

NOTE: Not for use with Flex Shaft Seed Meter Drive or Row Unit Lock-up Option

6001843	Granular Insecticide Kit with Brackets. . . . . For use with 2 Bushel Hoppers Only (Not for use with 3 Bushel Hoppers)	1,236.00
6100221	Insecticide Hopper Seal Kit . . . . . For use on the 9722 Row Units on the Wings	81.00

NOTE: Liquid Fertilizer Attachments are *NOT* available for these models.

9700 Stack-fold Mounted Planters

9700 Stack-fold Mounted Planters

F.O.B. Hesston, Kansas

STANDARD EQUIPMENT

- 7" x 7" Toolbar Frame with Hydraulic Cylinders, Hoses and Transport Lock-up
- Planter Units with: Air Metering, Chain Drive Seed Meter, 16" Double Disc Openers, 4.5"x 16" Walking Beam Gauge Wheels
- Fixed Drive Wheels with 9.5L-15, 6 Ply Tires
- Direct Drive Quick Couplers
- Adjustable Hitch for Category III or III-N
- Parking Stands
- Highway Transport Lighting
- Seed Drain Kit
- Central Blower, Manifold, Flow Control Valve and Air Pressure Gauge
- Gull Wing Package (Standard on 9792 and 9776)

Ground Drive Planters:
- Central Blower, Manifold, Flow Control Valve and Air Pressure Gauge, Blower Inlet Screen
- Non-ISO Seed Monitoring (9772)
- ISO Seed Monitoring (9792 and 9776)

Hydraulic Drive Planters:
- Central Blower, Manifold, Couplers for Direct Drive, Flow Control Valve and Air Pressure Gauge (Uses Tractor Hyd.- Requires min. 30 GPM @ 2000 psi with PTO Pump)
- Seed Drive Disconnect - Implement Lift Switch
- Micro Processor Controlled Variable Rate Hydraulic Drive
- ISO Control and Seed Monitoring

Requirements:
- Direct Drive Hydraulics Require 4 Remote Valves

# Rows	Spacing	Center Frame	Wings	Transport Width	Drive Wheels
12	30"	180"	86"	20'8"	4
12	36”	220"	118"	20'4"	4
12	38”	233"	134"	25'0"	4
12	40”	233"	134"	25'0"	4
16	30"	237"	137"	26'2"	4

Ordering Instructions:
Planters are now available with many items Factory Installed.
Factory Installed items are not eligible for return to the factory.

1. Select One Order Code from Base, and One Order Code from Each Group as Required.
2. Order Required Seed Discs from 9000 Series Dealer Installed Section.
3. Additional Dealer Installed Items can be Ordered for these Models from this Chapter and from 9000 Series Dealer Installed Section.
4. Accepts Row Unit Mounted Tillage Attachments Only.
5. If Lift Assist Wheels on 12 Row are Desired, Order from Orthman Manufacturing, Lexington, NE. Phone (308) 324-4654.

ORDER CODE	CATALOG NUMBER	DESCRIPTION	APPROX. WEIGHT (lb.)	LIST PRICE
STACK-FOLD MOUNTED PLANTERS				
WP9772	9772902YH	12 Row 30-inch Planter	6265	36,196.00
WP9792	9792909YH	12 Row 36-inch Planter	8365	43,938.00
WP9792	9792910YH	12 Row 38-inch Planter	8640	43,938.00
WP9792	9792911YH	12 Row 40-inch Planter	8640	43,938.00
WP9776	9776903YH	16 Row 30-inch Planter	10450	47,201.00

ORDER CODE	CATALOG NUMBER	DESCRIPTION	APPROX. WEIGHT (lb.)	LIST PRICE
➢➢Factory Installed➣➣		**ROW SPACING - For 9792 Only - Order One per Planter**		**Required**
4-36 INCH	6400909	36-inch Row Spacing		No Charge
4-38 INCH	6400910	38-inch Row Spacing		No Charge
4-40 INCH	6400911	40-inch Row Spacing		No Charge
◆◆Dealer Installed◆◆		**MARKERS - Order One per Planter**		**Optional**
Includes Notched Marker Discs				
	6001168	Rear Folding Markers, 9772		8,886.00
	6001303	Rear Folding Markers, 9792 and 9776		10,960.00
➢➢Factory Installed➣➣		**SEED HOPPERS AND METERS - Order One per Planter**		**Required**
12-Row Planters				
5-HO12	6400886	Set of 12 Two-Bushel Hoppers and Meters	30	9,510.00
5-HO13	6400887	Set of 12 Three-Bushel Hoppers and Meters (9792 Only)	30	11,152.00
5-HO10	6400903	Without Hoppers and Meters		No Charge
16-Row Planter				
5-HO12	6400799	Set of 16 Two-Bushel Hoppers and Meters	30	12,680.00
5-HO13	6400800	Set of 16 Three-Bushel Hoppers and Meters	30	14,869.00
5-HO10	6400802	Without Hoppers and Meters		No Charge
➢➢Factory Installed➣➣		**SEED METER DRIVE - Order One per Planter**		**Required**
For 9792				
3-D702	6400919	Flex Shaft Drive (for use with Auto Row Shut-Off) (Includes Electric Clutch for Each Row)		6,900.00
3-D701	6400918	Chain Drive without Auto Row Shut-Off		No Charge
For 9776				
3-D702	6400921	Flex Shaft Drive (for use with Auto Row Shut-Off) (Includes Electric Clutch for Each Row)		9,200.00
3-D701	6400920	Chain Drive without Auto Row Shut-Off		No Charge

Notes on Ordering Flex Shaft

- Requires: 6001400 Communication Module below.
- To Add Auto Row Shut-Off Feature, Order 6001396 C3000 Terminal / Monitor and 10 Hz or Stronger GPS Receiver
- Flex Shaft is Not Compatible with Section Control Shut-Off or Standard Duty Down Pressure Springs

◆◆Dealer Installed◆◆	**Communication Module Required to Operate Flex Shaft Above**		**Optional**
	6001400	Communication Module with 6 Programmable Toggle Switches for use with Flex Shaft Seed Meter Drive. Six Toggle Switches Provide Manual Control for Six Sections	509.00

The programmable communication module with toggle switches also provide manual back-up when using the Auto Row Shut-Off feature of the C3000 Terminal / Monitor if GPS signal is lost.

ORDER CODE	CATALOG NUMBER	DESCRIPTION	APPROX. WEIGHT (lb.)	LIST PRICE
➢➢Factory Installed➣➣ DRIVE - Order One per Planter				**Required**
For 9772				
20-D010	In Base	Ground Drive		No Charge
For 9792-36				
20-D011	6400299	Hydraulic Drive		1,436.00
20-D010	6400298	Ground Drive		No Charge
For 9792-38 and 9792-40				
20-D011	6400306	Hydraulic Drive		1,436.00
20-D010	6400305	Ground Drive		No Charge
For 9776				
20-D011	6400301	Hydraulic Drive		1,436.00
20-D010	6400300	Ground Drive		No Charge
HYDRAULIC SUPPLY SYSTEM - Order One per Planter **(Also Order from PTO Pump Adapter Group as necessary)**				**Required**
For Ground Drive Planter 9772 - 3.3 GPM				
	6001047	540 RPM PTO Pump	37	1,524.00
	6001048	1000 RPM PTO Pump for 1-3/8 inch Spline Shaft	34	1,678.00
	6001049	1000 RPM PTO Pump for 1-3/4 inch Spline Shaft		1,678.00
21-P802	In Base	**Factory Installed** Direct Drive and Hoses. (Uses Existing Tractor Hydraulics)	30	No Charge
For Ground Drive Planters 9792, 9776 - 3.3 GPM				
	6001047	540 RPM PTO Pump	37	1,524.00
	6001048	1000 RPM PTO Pump for 1-3/8 inch Spline Shaft	34	1,678.00
	6001049	1000 RPM PTO Pump for 1-3/4 inch Spline Shaft		1,678.00
21-P802	6400319	**Factory Installed** Direct Drive and Hoses (without oil coolers) (Uses Existing Tractor Hydraulics)	30	250.00
For Hydraulic Drive Planter 9792				
21-P801	6400327	**Factory Installed** 14 GPM PTO Pump with 8.5 Gallon Reservoir (Requires PTO Pump Adapter Below)	100	2,067.00
21-P803	6400320	**Factory Installed** Direct Drive and Hoses (without oil coolers) (Uses Existing Tractor Hydraulics)	30	250.00
For Hydraulic Drive Planter 9776				
21-P801	6400328	**Factory Installed** 14 GPM PTO Pump with 8.5 Gallon Reservoir (Requires PTO Pump Adapter Below)	100	2,067.00
21-P803	6400320	**Factory Installed** Direct Drive and Hoses (without oil coolers) (Uses Existing Tractor Hydraulics)	30	250.00
◆◆Dealer Installed◆◆ PTO PUMP ADAPTER - Order One per Planter				**Optional**
For Hydraulic Drive Planters with 21-P801				
	6000747	1000 RPM PTO Pump Adapter for 1-3/4 inch Shaft		167.00
	6000748	1000 RPM PTO Pump Adapter for 1-3/8 inch Shaft		167.00

ORDER CODE	CATALOG NUMBER	DESCRIPTION	APPROX. WEIGHT (lb.)	LIST PRICE

➢➢Factory Installed➣➣ SEED TUBES AND SENSORS - Order One per Planter — Required

12-Row Planters

16-P301	6400884	Seed Tubes with High Rate Sensors		2,202.00
16-P303	6400885	Seed Tubes with Seed Smart Sensors		3,615.00

16-Row Planter

16-P301	6400814	Seed Tubes with High Rate Sensors		2,937.00
16-P303	6400815	Seed Tubes with Seed Smart Sensors		4,820.00

➢➢Factory Installed➣➣ CLOSING SYSTEM - Order One per Planter — Required

NOTE: Angled Closing Wheels are factory installed in the staggered position with the left wheel forward and with two spacers under the wheels.

12-Row Planters

12-LR11	6400890	Angled Bracket with Rubber Closing Wheels	19	3,451.00
12-LR12	6400891	Angled Bracket with Cast Closing Wheels	54	3,972.00
12-LR14	6400423	Single “V” Trench Press Wheel	21	3,278.00
12-LR13	6400892	Angled Bracket Without Closing Wheels (Order Closing Wheels from 9000 Series Dealer Installed Section)		1,948.00
12-LR10	6400803	Without Closing Wheels		No Charge

16-Row Planter

12-LR11	6400804	Angled Bracket with Rubber Closing Wheels	19	4,600.00
12-LR12	6400807	Angled Bracket with Cast Closing Wheels	54	5,296.00
12-LR14	6401001	Single “V” Trench Press Wheel	21	4,370.00
12-LR13	6400806	Angled Bracket Without Closing Wheels (Order Closing Wheels from 9000 Series Dealer Installed Section)		2,597.00
12-LR10	6400803	Without Closing Wheels		No Charge

◆◆Dealer Installed◆◆ MONITOR SYSTEM - Order One per Planter — Required

Requires 6000923 Radar Ground Speed and Distance Sensing Gun or 6100064 Radar "Y" Harness.
For Use on Tractor with Radar.

For 9772

If Tractor is Equipped with ISO Terminal / Monitor,
Order 6000100 and 6001214 Monitor Bridge Package from 9000 Series Dealer Installed Section.

	6000807	SM400SE Seed Population Monitor (12 and 16 Rows) (Requires Magnetic Ground Speed Sensor or Radar Ground Speed and Distance Sensing Gun)	25	2,324.00
	6000100	Without Monitor (Must order 6000810 Without Ground Speed and Distance Sensing)		No Charge

For 9792, 9776

	6001396	C3000 Terminal / Monitor		5,299.00
	6001313	C1000 Terminal / Monitor		2,803.00
	6000993	Without Monitor (Order only if Tractor is Equipped with an Existing ISO Terminal / Monitor)		No Charge

ORDER CODE	CATALOG NUMBER	DESCRIPTION	APPROX. WEIGHT (lb.)	LIST PRICE
◆◆Dealer Installed◆◆		**GROUND SPEED SENSOR - Order One per Planter**		**Required**
	6000988	Magnetic Ground Speed Sensor (9772)	4	194.00
	6000955	Magnetic Ground Speed Sensor (9792, 9776)	4	194.00
	6000923	Radar Ground Speed and Distance Sensing Gun	15	1,049.00
	6100064	Radar "Y" Harness (4 pin round tractor connector to 4 pin round monitor connector)		152.00
	6000810	Without Ground Speed and Distance Sensing (For Use with 6000100)		No Charge

Note: Part # 72515753 - Radar "Y" Harness
(4 pin flat tractor connector to a 4 pin round monitor connector)
(Above Two "Y" Harnesses for tractors equipped with Radar Speed Sensing)

➢➢Factory Installed➣➣		**SECTION CONTROL SHUT-OFF - Order One per Planter** **Requires Controller 6001305** **For 9792 and 9776 ONLY**		**Required**
32-7P01	6400295	Without Section Control Shut-Off		No Charge
32-7P04	6400294	Section Control Shut-Off for Ground Drive (4 equal sections)	50	4,774.00
32-7P02	6400334	Section Control Shut-Off for Hydraulic Drive (4 equal sections)	50	4,774.00
◆◆Dealer Installed◆◆		**CONTROLLER - Order One per Planter**		**Optional**
	6001305	Section Control Shut-Off Controller (Required only with Factory Installed Section Control Shut-Off)		403.00
➢➢Factory Installed➣➣		**ADDITIONAL EQUIPMENT - Order One per Planter**		**Optional**
33-BZ01	6400755	Blower Inlet Screen (Not for Use with P802 or P803, Direct Drive)		99.00
9-A903	6400770	Transmission Shield (for use with Ground Drive)		73.00
7-PS01	6400902	Row Unit Gauge Wheel Scrapers (9772 and 9792)		420.00
7-PS01	6400816	Row Unit Gauge Wheel Scrapers (9776)		560.00
	71428520W	Ship Safe Preservative Coating (Recommended for Protection When Shipped in Winter Months)		604.00
◆◆Dealer Installed◆◆		**ADDITIONAL EQUIPMENT - See Below for Order Quantities**		**Optional**
For 9772				
	6000900	Gull Wing Kit when Operating Planter in Flex Mode		839.00
For 9776				
	6001302	Lift Assist Transport Wheels		10,289.00
	6001299	Dual Seed Meter Blower Kit for Hydraulic Drive Planters Equipped with Direct Drive Couplers		2,076.00
	6001300	Dual Seed Meter Blower Kit for Hydraulic Drive Planters Equipped with PTO Pump		2,120.00
	6001301	Dual Seed Meter Blower Kit for Ground Drive Planters		2,247.00

ORDER CODE	CATALOG NUMBER	DESCRIPTION	APPROX. WEIGHT (lb.)	LIST PRICE
➢➢Factory Installed➣➣		**DOWN PRESSURE SYSTEM - Order One per Planter**		**Required**
12-Row Planters				
23-KB14	6400367	Pneumatic Down Pressure System (9792 Only) **Requires 6001466 Compressor Below**	165	2,688.00
23-KB12	6400895	Heavy Duty Down Pressure Springs	12	2,432.00
23-KB11	6400894	Standard Duty Down Pressure Springs (Not Compatible with Row Unit Mounted Attachments)	7	789.00
23-KB10	6400027	Without Down Pressure Springs		No Charge
16-Row Planter				
23-KB14	6400368	Pneumatic Down Pressure System **Requires 6001466 Compressor Below**	220	3,584.00
23-KB12	6400811	Heavy Duty Down Pressure Springs	12	3,242.00
23-KB11	6400812	Standard Duty Down Pressure Springs (Not Compatible with Row Unit Mounted Attachments)	7	1,053.00
23-KB10	6400027	Without Down Pressure Springs		No Charge
◆◆Dealer Installed◆◆		**PNEUMATIC DOWN PRESSURE - Order Three per Planter**		**Optional**
For 9772 ONLY				
	6001842	Pneumatic Down Pressure (4 Row Set) Order One per 4 Rows **Requires Compressor and Hose**		896.00
◆◆Dealer Installed◆◆		**COMPRESSOR - Order One per Planter** **For Use with Pneumatic Down Pressure**		**Optional**
	6001466	Pneumatic Down Pressure Compressor (Required with Factory or Dealer Installed Pneumatic Down Pressure)	20	844.00
	6001370	Pneumatic Down Pressure Hose (100 Feet) (Will Plumb Up to 12 Rows) **Not Required with Factory Installed Pneumatic Down Pressure**		181.00

ORDER CODE	CATALOG NUMBER	DESCRIPTION	APPROX. WEIGHT (lb.)	LIST PRICE
➢➢**Factory Installed**➣➣		**ROW UNIT MOUNTED TILLAGE - Order One per Planter**		**Required**
		Heavy Duty Down Pressure Springs or Pneumatic Down Pressure Recommended		
		12-Row Planters		
25-VA10	6400021	Without Unit Mounted Tillage Attachment		No Charge
25-VA13	6400557	Tillage Coulter with Ripple Blade	41	3,793.00
25-VA15	6400573	Tillage Coulter with 13 Flute Blade	41	3,793.00
25-VA18	6400581	Tillage Coulter with 25 Flute Blade		3,793.00
25-VA16	6400896	Residue Manager - Finger Wheel 13-inch Steel Wheel with 16 Fingers (For Use without Tillage Coulters)	37	4,608.00
25-VA19	6400897	Residue Manager - SharkTooth® Wheel 13-inch Steel Wheel with 12 Teeth (For Use without Tillage Coulters)		4,978.00
25-VA20	6400898	Floating Residue Manager - SharkTooth® Wheel with Depth Band, 13-inch Steel Wheel with 12 Teeth (For Use without Tillage Coulters)		6,748.00
25-VA11	6400541	Tillage Coulter without Blade (Order Coulter Blades from 9000 Series Dealer Installed Section)		3,272.00
		16-Row Planter		
25-VA10	6400021	Without Unit Mounted Tillage Attachment		No Charge
25-VA13	6400558	Tillage Coulter with Ripple Blade	41	5,058.00
25-VA15	6400574	Tillage Coulter with 13 Flute Blade	41	5,058.00
25-VA18	6400582	Tillage Coulter with 25-inch Flute Blade		5,058.00
25-VA16	6400424	Residue Manager - Finger Wheel 13-inch Steel Wheel with 16 Fingers (For Use without Tillage Coulters)	37	6,145.00
25-VA19	6400439	Residue Manager - SharkTooth® Wheel 13-inch Steel Wheel with 12 Teeth (For Use without Tillage Coulters)		6,637.00
25-VA20	6400809	Floating Residue Manager - SharkTooth® Wheel with Depth Band, 13-inch Steel Wheel with 12 Teeth (For Use without Tillage Coulters)		8,996.00
25-VA11	6400542	Tillage Coulter without Blade (Order Coulter Blades from 9000 Series Dealer Installed Section)		4,362.00

ORDER CODE	CATALOG NUMBER	DESCRIPTION	APPROX. WEIGHT (lb.)	LIST PRICE

➢➢Factory Installed➣➣ COMBINATION RESIDUE MANAGER - Order 1 per Planter — Optional

Requires Factory Installed Row Unit Mounted Tillage Coulter (VA13, VA15, VA18 or VA11)
Recommend Heavy Duty Down Pressure Springs or Pneumatic Down Pressure

12-Row Planters

26-K102	6400597	Residue Manager Attachment . . . . . 10-inch Steel Wheel with 16 Fingers Includes Bearing Shields	4,608.00
26-K103	6400605	Residue Manager Attachment . . . . . 13-inch Steel Wheel with 16 Fingers Includes Bearing Shields	4,608.00
26-K104	6400613	Residue Manager Attachment . . . . . 13-inch Steel SharkTooth® Wheel with 12 Teeth	4,570.00
26-K101	6400589	Residue Manager without Spoke Wheels . . . . . (Order Wheels from 9000 Series Dealer Installed Section)	1,145.00

16-Row Planter

26-K102	6400598	Residue Manager Attachment . . . . . 10-inch Steel Wheel with 16 Fingers Includes Bearing Shields	6,145.00
26-K103	6400606	Residue Manager Attachment . . . . . 13-inch Steel Wheel with 16 Fingers Includes Bearing Shields	6,145.00
26-K104	6400614	Residue Manager Attachment . . . . . 13-inch Steel SharkTooth® Wheel with 12 Teeth	6,093.00
26-K101	6400590	Residue Manager without Spoke Wheels . . . . . (Order Wheels from 9000 Series Dealer Installed Section)	1,527.00

◆◆Dealer Installed◆◆ GRANULAR INSECTICIDE ATTACHMENT — Optional

Granular Insecticide Attachment - Order One Per Two Rows

NOTE: Not for use with Flex Shaft Seed Meter Drive or Row Unit Lock-up Option

	6001843	Granular Insecticide Kit with Brackets. . . . . For use with 2 Bushel Hoppers Only (Not for use with 3 Bushel Hoppers)	1,236.00

NOTE: Liquid Fertilizer Attachments are *NOT* available for these models.

RESERVED

9800VE Narrow Transport Folding Planters

9800VE Narrow Transport Folding Planters

F.O.B. Hesston, Kansas

STANDARD EQUIPMENT

9800VE Series Narrow Fold Planters with Precision Planting Features:

- 20/20 SeedSense Monitor (Field View Compatible, less iPad
- vSet Meters with vDrive Electronic Drive, Single Row Modules (One per Row)
- Optional DeltaForce Down Pressure System Complete with Weight Pins
- Optional Individual Row Down Force Weight Pins
- Dual Hydraulically Driven Vacuum Fans
- Cental Fill System with 90 Bushel, 2 Section, Central Seed Hopper and Seed Distribution System
- 7" x 7" Forward Folding Frame with Hydraulic Cylinders, Hoses and Frame Lock
- Hydraulic Lift with all Cylinders, Hoses, and Transport Lock-Up
- Planter Units with: Vacuum Seed Metering, Electric Meter Drive, Single Row Modules, 16" Double Disc Openers, 4.5" x 16" Walking Beam Gauge Wheels
- Highway Transport Lighting

Transport and Carrying Wheels / Tires

WP9812VE - (6) 10:00-15 (TL) Load Range D
WP9816VE - (8) 295/75R22.5, 16 Ply
WP9824VE - (10) 295/75R22.5, 16 Ply

Central Fill System (CFS) planters are primarily equipped to plant corn and soybeans with the appropriate sized air discharge screen installed in the mini-hopper of each meter assembly. Screens designed for smaller seeds such as milo can be ordered separately.

Required Hydraulic Remotes For 9812VE Central Fill System

- 2 Tractor Remotes if Using 40 GPM PTO Pump and Reservoir
- 2 Tractor Remotes Plus Power Beyond if Using Tractor Hydraulics
- 3 Remotes if Using 40 GPM PTO Pump, Reservoir, and DeltaForce Down Pressure Option
- 3 Remotes Plus Power Beyond with DeltaForce Down Pressure

Required Hydraulic Remotes For 9816VE and 9824VE Central Fill System

- 3 Tractor Remotes if Using 14 GPM PTO Pump and Reservoir
- 4 Tractor Remotes If Using Tractor Hydraulics
- 4 Remotes if Using PTO Pump, Reservoir, and DeltaForce Down Pressure
- 5 Tractor Remotes if Using PTO Pump, DeltaForce Down Pressure, and Centrifical Fertilizer Pump
- 6 Tractor Remotes if Using Tractor Hydraulics, DeltaForce Down Pressure, and Centrifical Fertilizer Pump

Shipping Dimensions

	Length	Height	Width	Weight
WP9812VE 2-Pt	31' 2"	10' 0"	11' 8"	14,100
WP9816VE 2-Pt	34' 4"	11' 10"	11' 8"	18,000
WP9816VE DB	36' 0"	11' 10"	11' 8"	18,000
WP9824VE 2-Pt	45' 2"	11' 10"	11' 8"	26,000
WP9824VE DB	46' 10"	11' 10"	11' 8"	26,000

Transport and Frame Dimensions

# Rows	Spacing	Center Frame	Wings	Transport Width	Tongue Wt., Full	Transport Wheels	Total Wheels
12	30"	135"	10'	12'	9,970 lbs	4	6
16	30"	135"	14'	12'	9,970 lbs	4	8
24	30"	135"	24'	12'	10,700 lbs	4	10

Ordering Instructions:

Planters are now available with many items Factory Installed.
Factory Installed items are not eligible for return to the factory.

1. Order Required Seed Discs available on page 64.
2. Select One Order Code from Base, and One Order Code from Each Group as Required.
3. Additional Dealer Installed Items can be Ordered for these Models from this Chapter and from 9000 Series Dealer Installed Section.
4. Accepts Row Unit Mounted Tillage Attachments Only.

ORDER CODE	CATALOG NUMBER	DESCRIPTION	APPROX. WEIGHT (lb.)	LIST PRICE
NARROW TRANSPORT FOLDING PLANTERS				
WP9812VE	9812904	12 Row 30-inch Planter, Vacuum Electric	14100	83,236.00
WP9816VE	9816911	16 Row 30-inch Planter, Vacuum Electric	18000	106,360.00
WP9824VE	9824910	24 Row 30-inch Planter, Vacuum Electric	26000	167,048.00

ORDER CODE	CATALOG NUMBER	DESCRIPTION	APPROX. WEIGHT (lb.)	LIST PRICE
➢➢Factory Installed➣➣		**MARKERS - Order One per Planter**		**Required**
Two Point Hitch for 12 Row				
2-P214	6400783	Bi-Fold Break-Away Markers with Notched Marker Discs		6,791.00
2-P202	6400782	Without Markers		No Charge
Two Point Hitch for 16 Row				
2-P214	6401534	Tri-Fold Break-Away Markers with Notched Marker Discs	1544	11,337.00
2-P202	6401533	Without Markers		No Charge
Two Point Hitch for 24 Row				
2-P204	6401530	Tri Fold Break-Away Markers with Notched Marker Discs	1544	13,380.00
2-P203	6401529	Without Markers		No Charge
Drawbar Hitch for 16 Row				
2-P215	6401536	Tri-Fold Break-Away Markers with Notched Marker Discs	2950	14,832.00
2-P217	6401535	Without Markers		4,832.00
Drawbar Hitch for 24 Row				
2-P216	6401532	Tri Fold Break-Away Markers with Notched Marker Discs	2950	16,877.00
2-P218	6401531	Without Markers		5,543.00

Note: If Markers are not Selected, Wing Weight Brackets and Weights are Recommended.

◆◆Dealer Installed◆◆		**WEIGHT BRACKETS - Order One per Planter**		**Optional**
	6001488	Marker Weight Bracket (Set of 2), 9812 Mounts Weights to Marker	53	160.00
	6001493	Weight Bracket (Set of 2), 9816 To Add Weights for Without Markers Option	21	425.00
	6001940	Weight Bracket (Set of 2), 9824 To Add Weights for Without Markers Option	21	425.00

◆◆Dealer Installed◆◆		**WEIGHTS - Order One per Planter**		**Optional**
	6001451	Suitcase Weights (Set of 8 Weights) 125 lbs (55 kg) Each For use with Weight Brackets above	1000	1,500.00

➢➢Factory Installed➣➣		**CENTRAL FILL SYSTEM - Order One per Planter** **Includes Seed Meters and Mini-Hoppers**		**Required**

Note: CF11 - 90 Bushel CFS for 12 Row allows the use of 300 Gallon Fertilizer Tank Package
CF11 - 90 Bushel CFS for 16 and 24 Row - No Fertilizer Tank Package Allowed
CF12 - 90 Bushel CFS for 16 and 24 Row allows the use of 500 Gallon Fertilizer Tank Package

18-CF11	6401872	90 Bushel Central Fill System for 12 Row	23,999.00
18-CF11	6401643	90 Bushel Central Fill System for 16 Row	25,494.00
18-CF11	6401644	90 Bushel Central Fill System for 24 Row	27,408.00
18-CF12	6401645	90 Bushel Central Fill System for 16 Row	25,494.00
18-CF12	6401646	90 Bushel Central Fill System for 24 Row	27,408.00

ORDER CODE	CATALOG NUMBER	DESCRIPTION	APPROX. WEIGHT (lb.)	LIST PRICE

➢➢Factory Installed➣➣ SEED HOPPERS AND METERS - Order One per Planter For CFS — Required

Note: Each Hopper/Meter Assembly contains one Corn Crop Kit vSet 2 #6001896

12-Row Planter

5-HO14	6401665	Set of 12 Mini Hoppers and Meters - vSet	Meter	In Base

16-Row Planter

5-HO14	6401667	Set of 16 Mini Hoppers and Meters - vSet	Meter	In Base

24-Row Planter

5-HO14	6401669	Set of 24 Mini Hoppers and Meters - vSet	Meter	In Base

◆◆Dealer Installed◆◆ PRECISION PLANTING CROP KITS — Required

Note: Each Hopper/Meter Assembly above contains one Corn Crop Kit vSet 2 #6001896, order additional as required

Seed Discs - Order <u>One Per Planter Row (Unless Otherwise Noted)</u>

6001896	Crop Kit vSet 2 - Corn	90.00
6001897	Crop Kit vSet 2 - Soybean	90.00
6001898	Crop Kit vSet 2 - Medium Edible Bean	114.00
6001899	Crop Kit vSet 2 - Large Edible Bean	66.00
6001900	Crop Kit vSet 2 - 2 Seed Hill Drop Cotton	78.00
6001901	Crop Kit vSet 2 - Small Sugar Beet and Onion (Requires Milo Screen Package 6001912)	64.00
6001902	Crop Kit vSet 2 - 3 Seed Hill Drop Cotton	78.00
6001903	Crop Kit vSet 2 - Large Sugar Beet and Onion (Requires Milo Screen Package 6001912)	64.00
6001904	Crop Kit vSet 2 - Canola	66.00
6001905	Crop Kit vSet 2 - Specialty Disk (.100 Diameter)	66.00
6001906	Crop Kit vSet 2 - Specialty Disk (.115 Diameter)	66.00
6001907	Crop Kit vSet 2 - Specialty Disk (.125 Diameter)	66.00
6001908	Crop Kit vSet 2 - Specialty Disk (.135 Diameter)	66.00
6001909	Crop Kit vSet 2 - Specialty Disk (.145 Diameter)	66.00
6001910	Crop Kit vSet 2 - Specialty Disk (.155 Diameter)	66.00
6001911	Crop Kit vSet 2 - Specialty Ejector (Required for Specialty Disks above)	22.00
6001912	Crop Kit vSet 2 - Milo Screen Package (Order One per 4 Rows) (For use with CFS Mini Hoppers Only)	60.00
6001913	Crop Kit vSet 2 - Up Restricting Brush (For use with 2- or 3-Seed Hill Drop Cotton)	18.00
6001914	Crop Kit vSet 2 - Large Seed Upper Brush	18.00

ORDER CODE	CATALOG NUMBER	DESCRIPTION	APPROX. WEIGHT (lb.)	LIST PRICE
➢➢Factory Installed➣➣ DRIVE - Order One per Planter				**Required**
20-DO25	6401548	vDrive Electronic Drive, 12 Row.		In Base
20-DO25	6401656	vDrive Electronic Drive, 16 Row.		In Base
20-DO25	6401867	vDrive Electronic Drive, 24 Row.		In Base
➢➢Factory Installed➣➣ HYDRAULIC SUPPLY SYSTEM - Order One per Planter				**Required**
9812VE With Electric Drive, With CFS				
21-P801	6401885	40 GPM PTO Pump with 25 Gallon Reservoir . . . . . and 1-3/8 inch PTO Spline Shaft (Does not Require PTO Pump Adaptor)		4,368.00
21-P812	6401880	Tractor Hydraulics (Direct Drive and Hoses).	30	250.00
9816VE and 9824VE With Electric Drive, With CFS				
Note: MY2017 Production will feature larger capacity PTO pumps at same price. Please use pump options below for quoting and ordering purposes until supplemental options are available.				
21-P801	6401881	14 GPM PTO Pump with 8.5 Gallon Reservoir . . . . . **(2-Point Hitch)**		2,067.00
21-P807	6401869	14 GPM PTO Pump with 8.5 Gallon Reservoir . . . . . **(Drawbar Hitch)**	100	2,067.00
21-P802	6401659	Tractor Hydraulics (Direct Drive and Hoses).	30	250.00
◆◆Dealer Installed◆◆ PTO PUMP ADAPTER - Order One per Planter				**Required**
	6000747	1000 RPM PTO Pump Adapter for 1-3/4 in Shaft . . . . . (For use with 21-P801 or 21-P807 on 9816VE and 9824VE)		167.00
	6000748	1000 RPM PTO Pump Adapter for 1-3/8 in Shaft . . . . . (For use with 21-P801 or 21-P807 on 9816VE and 9824VE)		167.00
	6000777	Without PTO Pump Adapter . . . . . (For Use with 21-P812 and 21-P802)		No Charge

ORDER CODE	CATALOG NUMBER	DESCRIPTION	APPROX. WEIGHT (lb.)	LIST PRICE
➢➢Factory Installed➣➣ SEED TUBES AND SENSORS - Order One per Planter				**Required**
12-Row Planter				
16-P301	6401882	Seed Tubes with High Rate Sensors		2,202.00
16-Row Planter				
16-P301	6401883	Seed Tubes with High Rate Sensors		2,937.00
24-Row Planter				
16-P301	6401884	Seed Tubes with High Rate Sensors		4,405.00
➢➢Factory Installed➣➣ CLOSING SYSTEM - Order One per Planter				**Required**
NOTE: Angled Closing Wheels are factory installed in the staggered position with the left wheel forward and with two spacers under the wheels.				
12-Row Planter				
12-LR11	6400890	Angled Bracket with Rubber Closing Wheels	19	3,451.00
12-LR12	6400891	Angled Bracket with Cast Closing Wheels	54	3,972.00
12-LR13	6400892	Angled Bracket Without Closing Wheels (Order Closing Wheels from 9000 Series Dealer Installed Section)		1,948.00
12-LR10	6400803	Without Closing Wheels		No Charge
16-Row Planter				
12-LR11	6400804	Angled Bracket with Rubber Closing Wheels	19	4,600.00
12-LR12	6400807	Angled Bracket with Cast Closing Wheels	54	5,296.00
12-LR13	6400806	Angled Bracket Without Closing Wheels (Order Closing Wheels from 9000 Series Dealer Installed Section)		2,597.00
12-LR10	6400803	Without Closing Wheels		No Charge
24-Row Planter				
12-LR11	6400838	Angled Bracket with Rubber Closing Wheels	19	6,900.00
12-LR12	6400839	Angled Bracket with Cast Closing Wheels	54	7,944.00
12-LR13	6400840	Angled Bracket Without Closing Wheels (Order Closing Wheels from 9000 Series Dealer Installed Section)		3,895.00
12-LR10	6400803	Without Closing Wheels		No Charge
◆◆Dealer Installed◆◆ MONITOR SYSTEM - Order One per Planter				**Required**
Requires 6000923 Radar Ground Speed and Distance Sensing Gun or 6100064 Radar "Y" Harness. **For Use on Tractor with Radar.** **If Tractor is Equipped with an Integrated C1000 Terminal / Monitor, Order 6000993**				
	6001858	20/20 SeedSense Terminal / Monitor		In Base
	6001396	C3000 Terminal / Monitor		5,299.00
	6001313	C1000 Terminal / Monitor		2,803.00
	6000993	Without Monitor (Select this only if the Host Tractor is Equipped with an Existing ISO Terminal / Monitor) ISO Terminal Required to Operate GPS Tractor Guided Steering and Liquid Fertilizer if Variable Rate Option is Selected.		No Charge

ORDER CODE	CATALOG NUMBER	DESCRIPTION	APPROX. WEIGHT (lb.)	LIST PRICE
◆◆Dealer Installed◆◆		**GROUND SPEED SENSOR - Order One per Planter**		**Required**
	6000923	Radar Ground Speed and Distance Sensing Gun	15	1,049.00
	6100064	Radar "Y" Harness (4 pin round tractor connector to 4 pin round monitor connector)		152.00
	6000810	Without Ground Speed and Distance Sensing (For Use with 6000100)		No Charge

Note: Part # 72515753 - Radar "Y" Harness
(4 pin flat tractor connector to a 4 pin round monitor connector)
(Above Two "Y" Harnesses for tractors equipped with Radar Speed Sensing)

◆◆Dealer Installed◆◆ **DRIVE WHEEL MUD SCRAPER - Order One for Each Wheel as Desired**

Drive Wheel Mud Scrapers have a maximum Quantity of 6 on WP9812VE, 8 on WP9816VE, and 10 on WP9824VE

6001447	Drive Wheel Mud Scraper, 9812VE, Quantity 1	184.00
6001941	Drive Wheel Mud Scraper, 9816VE & 9824VE, Quantity 1	184.00

Note: Drive Wheel Mud Scraper is Recommended for the Contact Drive Tire When Ground Drive Piston Fertilizer Pump Option is Selected.

ORDER CODE	CATALOG NUMBER	DESCRIPTION	APPROX. WEIGHT (lb.)	LIST PRICE
➢➢Factory Installed➣➣ ADDITIONAL EQUIPMENT - Order One per Planter				**Optional**
7-PS01	6400902	Row Unit Gauge Wheel Scrapers, 9812VE		420.00
7-PS01	6400816	Row Unit Gauge Wheel Scrapers, 9816VE		560.00
7-PS01	6400851	Row Unit Gauge Wheel Scrapers, 9824VE		840.00
	71428520W	Ship Safe Preservative Coating (Recommended for Protection When Shipped in Winter Months)		604.00
➢➢Factory Installed➣➣DOWN PRESSURE SYSTEM - Order One per Planter				**Required**
12-Row Planter				
23-KB16	6401552	DeltaForce without Alternator		11,140.00
23-KB15	6401549	DeltaForce with Alternator		12,845.00
23-KB12	6400895	Heavy Duty Down Pressure Springs		2,432.00
23-KB10	6400027	Without Down Pressure Springs		No Charge
16-Row Planter				
23-KB16	6401553	DeltaForce without Alternator		14,452.00
23-KB15	6401550	DeltaForce with Alternator		16,157.00
23-KB12	6400811	Heavy Duty Down Pressure Springs	12	3,242.00
23-KB10	6400027	Without Down Pressure Springs		No Charge
24-Row Planter				
23-KB15	6401551	DeltaForce with Alternator		22,780.00
23-KB12	6400843	Heavy Duty Down Pressure Springs	12	4,864.00
23-KB10	6400027	Without Down Pressure Springs		No Charge
➢➢Factory Installed➣➣DOWNFORCE SENSOR - Order One per Planter				**Optional**
For use Without DeltaForce Used with 20/20 SeedSense		**Terminal / Monitor to Display Mechanical Spring Generated Row Unit Down Force**		
40-SD01	6401892	DeltaForce Hydraulic Downforce Sensor, 9812VE		2,192.00
40-SD01	6401893	DeltaForce Hydraulic Downforce Sensor, 9816VE		2,922.00
40-SD01	6401894	DeltaForce Hydraulic Downforce Sensor, 9824VE		4,383.00

ORDER CODE	CATALOG NUMBER	DESCRIPTION	APPROX. WEIGHT (lb.)	LIST PRICE

➢➢Factory Installed≺≺ ROW UNIT MOUNTED TILLAGE - Order One per Planter Required

Heavy Duty Down Pressure Springs Recommended; Row Unit Coulters not Recommended for use with DeltaForce

12-Row Planter

25-VA10	6400021	Without Unit Mounted Tillage Attachment		No Charge
25-VA13	6400557	Tillage Coulter with Ripple Blade		3,793.00
25-VA15	6400573	Tillage Coulter with 13 Flute Blade		3,793.00
25-VA18	6400581	Tillage Coulter with 25 Flute Blade		3,793.00
25-VA16	6400896	Residue Manager - Finger Wheel 13-inch Steel Wheel with 16 Fingers (For use without Tillage Coulters)		4,608.00
25-VA19	6400897	Residue Manager - SharkTooth® Wheel 13-inch Steel Wheel with 12 Teeth (For Use without Tillage Coulters)		4,978.00
25-VA20	6400898	Floating Residue Manager - SharkTooth® Wheel with Depth Band, 13-inch Steel Wheel with 12 Teeth (For Use without Tillage Coulters)		6,748.00
25-VA11	6400541	Tillage Coulter without Blade (Order Coulter Blades from 9000 Series Dealer Installed Section)		3,272.00

16-Row Planter

25-VA10	6400021	Without Unit Mounted Tillage Attachment		No Charge
25-VA13	6400558	Tillage Coulter with Ripple Blade	41	5,058.00
25-VA15	6400574	Tillage Coulter with 13 Flute Blade	37	5,058.00
25-VA18	6400582	Tillage Coulter with 25 Flute Blade		5,058.00
25-VA16	6400424	Residue Manager - Finger Wheel 13-inch Steel Wheel with 16 Fingers (For Use without Tillage Coulters)	37	6,145.00
25-VA19	6400439	Residue Manager - SharkTooth® Wheel 13-inch Steel Wheel with 12 Teeth (For Use without Tillage Coulters)		6,637.00
25-VA20	6400809	Floating Residue Manager - SharkTooth® Wheel with Depth Band, 13-inch Steel Wheel with 12 Teeth (For Use without Tillage Coulters)		8,996.00
25-VA11	6400542	Tillage Coulter without Blade (Order Coulter Blades from 9000 Series Dealer Installed Section)		4,362.00

24-Row Planter

25-VA10	6400021	Without Unit Mounted Tillage Attachment		No Charge
25-VA13	6400560	Tillage Coulter with Ripple Blade	41	7,588.00
25-VA15	6400576	Tillage Coulter with 13 Flute Blade	37	7,588.00
25-VA18	6400584	Tillage Coulter with 25 Flute Blade		7,588.00
25-VA16	6400845	Residue Manager - Finger Wheel 13-inch Steel Wheel with 16 Fingers (For use without Tillage Coulters)	37	9,217.00
25-VA19	6400846	Residue Manager - SharkTooth® Wheel 13-inch Steel Wheel with 12 Teeth (For Use without Tillage Coulters)		9,956.00
25-VA20	6400847	Floating Residue Manager - SharkTooth® Wheel with Depth Band, 13-inch Steel Wheel with 12 Teeth (For Use without Tillage Coulters)		13,495.00
25-VA11	6400544	Tillage Coulter without Blade (Order Coulter Blades from 9000 Series Dealer Installed Section)		6,544.00

ORDER CODE	CATALOG NUMBER	DESCRIPTION	APPROX. WEIGHT (lb.)	LIST PRICE

➢➢Factory Installed➣➣ COMBINATION RESIDUE MANAGER - Order 1 per Planter Optional

Requires Factory Installed Row Unit Mounted Tillage Coulter (VA13, VA15, VA18 or VA11)
Heavy Duty Down Pressure Springs Recommended; Row Unit Coulters not Recommended for use with DeltaForce

12-Row Planter

26-K102	6400597	Residue Manager Attachment . . . . . 10-inch Steel Wheel with 16 Fingers and Bearing Shields	4,608.00
26-K103	6400605	Residue Manager Attachment . . . . . 13-inch Steel Wheel with 16 Fingers and Bearing Shields	4,608.00
26-K104	6400613	Residue Manager Attachment . . . . . 13-inch Steel SharkTooth® Wheel with 12 Teeth	4,570.00
26-K101	6400589	Residue Manager without Spoke Wheels . . . . . (Order Wheels from 9000 Series Dealer Installed Section)	1,145.00

16-Row Planter

26-K102	6400598	Residue Manager Attachment . . . . . 10-inch Steel Wheel with 16 Fingers and Bearing Shields	6,145.00
26-K103	6400606	Residue Manager Attachment . . . . . 13-inch Steel Wheel with 16 Fingers and Bearing Shields	6,145.00
26-K104	6400614	Residue Manager Attachment . . . . . 13-inch Steel SharkTooth® Wheel with 12 Teeth	6,093.00
26-K101	6400590	Residue Manager without Spoke Wheels . . . . . (Order Wheels from 9000 Series Dealer Installed Section)	1,527.00

24-Row Planter

26-K102	6400600	Residue Manager Attachment . . . . . 10-inch Steel Wheel with 16 Fingers and Bearing Shields	9,217.00
26-K103	6400608	Residue Manager Attachment . . . . . 13-inch Steel Wheel with 16 Fingers and Bearing Shields	9,217.00
26-K104	6400616	Residue Manager Attachment . . . . . 13-inch Steel SharkTooth® Wheel with 12 Teeth	9,140.00
26-K101	6400592	Residue Manager without Spoke Wheels . . . . . (Order Wheels from 9000 Series Dealer Installed Section)	2,292.00

ORDER CODE	CATALOG NUMBER	DESCRIPTION	APPROX. WEIGHT (lb.)	LIST PRICE

➢➢Factory Installed≺≺ LIQUID FERTILIZER TANK PACKAGES - Order One per Planter — Optional

Factory Installed Items Are Not Eligible for Return to the Factory

Liquid Fertilizer Attachment (Without Openers)

How To Order Factory Installed Liquid Fertilizer Attachment

(Opener Hose is Dealer Installed)

1. Order 1 Liquid Fertilizer Package. Tanks Include Mounting Brackets.
2. Order Rear Tow Hitch.
3. Order Fertilizer Openers as desired. See page 76
4. Order Opener Hose (Dealer Installed).

Note: CF11 - 90 Bushel CFS for 12 Row allows the use of 300 Gallon Fertilizer Tank Package
CF11 - 90 Bushel CFS for 16 & 24 Row - No Fertilizer Tank Package Allowed
CF12 - 90 Bushel CFS for 16 & 24 Row allows the use of 500 Gallon Fertilizer Tank Package

Fertilizer: Determining Customer's Target Application Rate in Gallons Per Acre (GPA)

Model 9816VE (6 mph maximum speed):

For target rates below 9 GPA automatic rate control recommend: Electric Pump and Variable Drive

For target rates of 9-20 GPA* automatic rate control recommend: Hydraulic Centrifugal Pump and Variable Drive

For target rates of 5-20 GPA **manual** rate control recommend: Ground Drive Single Piston Pump

*For target rates below 13 GPA, recommend dealer installed flow meter: 700745726 from AGCO Service Parts.

Model 9824VE (6 mph maximum speed):

For target rates below 6 GPA automatic rate control recommend: Electric Pump and Variable Drive

For target rates of 7-20 GPA** automatic rate control recommend: Hydraulic Centrifugal Pump and Variable Drive

For target rates of 5-20 GPA **manual** rate control recommend: Ground Drive Single Piston Pump

**For target rates below 10 GPA, recommend dealer installed flow meter: 700745726 from AGCO Service Parts.

9812VE LIQUID FERTILIZER TANK PACKAGES

Note: CF11 - 90 Bushel CFS for 12 Row allows the use of 300 Gallon Fertilizer Tank Package

35-UN08	6400404	300 Gallon (1136 L) Liquid Fertilizer Tank	2,749.00
35-UN11	6400404	300 Gallon (1136 L) Liquid Fertilizer Tank	2,749.00
	6400397	Single Piston Pump and Contact Wheel Drive	6,052.00
	6400401	Tank Plumbing Package	789.00
	6400882	Outlet Manifold with Orifices	872.00
35-UN14	6400404	300 Gallon (1136 L) Liquid Fertilizer Tank	2,749.00
	6400397	Single Piston Pump and Contact Wheel Drive	6,052.00
	6400401	Tank Plumbing Package	789.00
	6400883	Flow Divider	1,958.00

Tow Behind - Requires Factory Installed Rear Tow Hitch

35-UN17	6400397	Single Piston Pump and Contact Wheel Drive	6,052.00
	6400882	Outlet Manifold with Orifices	872.00
35-UN19	6400397	Single Piston Pump and Contact Wheel Drive	6,052.00
	6400883	Flow Divider	1,958.00

➢➢Factory Installed≺≺ REAR TOW HITCH - Order One per Planter — Required

12-Row Planter

31-P700	6400266	Without Tow Hitch for 90 Bushel CFS . . . 25	No Charge
31-P711	6400445	Rear Tow Hitch with Fertilizer Plumbing for 2 and 3 Bushel Hoppers as well as 90 Bushel CFS	1,708.00

Note: Rear Tow Hitch is for towing up to 2,000 gallon (7570L) Liquid Fertilizer Tank

ORDER CODE	CATALOG NUMBER	DESCRIPTION	APPROX. WEIGHT (lb.)	LIST PRICE

➢➢**Factory Installed**➣➣ **Continued**

9816VE LIQUID FERTILIZER TANK PACKAGES

Note: CF12 - 90 Bushel CFS for 16 & 24 Row allows the use of 500 Gallon Fertilizer Tank Package
If Rear Tow Hitch is required, must order Dealer Installed 6001228

35-UN08	6401485	500 Gallon (1893 L) Liquid Fertilizer Tank (Mounting Cradle)	4,080.00
35-UN24	6401485	500 Gallon (1893 L) Liquid Fertilizer Tank (Mounting Cradle)	4,080.00
	6401503	Single Piston Pump and Contact Wheel Drive	3,895.00
	6401504	Tank Plumbing to Single Piston Pump	803.00
	6401515	Pump Outlet Plumbing with Orificed Boom Sections	1,788.00
35-UN26	6401485	500 Gallon (1893 L) Liquid Fertilizer Tank (Mounting Cradle)	4,080.00
	6401503	Single Piston Pump and Contact Wheel Drive	3,895.00
	6401504	Tank Plumbing to Single Piston Pump	803.00
	6401523	Pump Outlet Plumbing	256.00
	6400213	Flow Divider	2,865.00
35-UN28	6401485	500 Gallon (1893 L) Liquid Fertilizer Tank (Mounting Cradle)	4,080.00
	6401538	Centrifugal Pump and Variable Rate Drive	6,612.00
	6401493	Tank Plumbing for Centrifugal Pump	1,671.00
	6401526	Pump Outlet Plumbing with Orificed Boom Sections	2,048.00
	6401856	ISO System for Electric Drive	2,280.00
35-UN30	6401485	500 Gallon (1893 L) Liquid Fertilizer Tank (Mounting Cradle)	4,080.00
	6401524	Electric Pump and Variable Rate Drive	388.00
	6401525	Tank Plumbing for Electric Pump	1,580.00
	6401526	Pump Outlet Plumbing with Orificed Boom Sections	2,048.00
	6401856	ISO System for Electric Drive	2,280.00
35-UN29	6401485	500 Gallon (1893 L) Liquid Fertilizer Tank (Mounting Cradle)	4,080.00
	6401538	Centrifugal Pump and Variable Rate Drive	6,612.00
	6401493	Tank Plumbing for Centrifugal Pump	1,671.00
	6401494	Pump Outlet Plumbing	256.00
	6400213	Flow Divider	2,865.00
	6401856	ISO System for Electric Drive	2,280.00
35-UN31	6401485	500 Gallon (1893 L) Liquid Fertilizer Tank (Mounting Cradle)	4,080.00
	6401524	Electric Pump and Variable Rate Drive	388.00
	6401525	Tank Plumbing for Electric Pump	1,580.00
	6401494	Pump Outlet Plumbing	256.00
	6400213	Flow Divider	2,865.00
	6401856	ISO System for Electric Drive	2,280.00

Tow Behind - Requires Factory Installed Rear Tow Hitch

35-UN19	6401503	Single Piston Pump and Contact Wheel Drive	3,895.00
	6401540	Plumbing Kit for Tow Behind	394.00
	6401523	Pump Outlet Plumbing	256.00
	6400213	Flow Divider	2,865.00

ORDER CODE	CATALOG NUMBER	DESCRIPTION	APPROX. WEIGHT (lb.)	LIST PRICE

➢➢Factory Installed➣➣ REAR TOW HITCH - Order One per Planter — Required

16 Row Planters

31-P700	6400266	Without Tow Hitch for 90 Bushel CFS	25	No Charge
31-P709	6400268	Rear Tow Hitch for 90 Bushel CFS		1,314.00

Note: Rear Tow Hitch is for towing up to 2,000 gallon (7570L) Liquid Fertilizer Tank

Note: CF12 Central Fill with 500 Gallon Liquid Fertilizer Tanks, if require Rear Tow Hitch, must order Dealer Installed 6001228

ORDER CODE	CATALOG NUMBER	DESCRIPTION	APPROX. WEIGHT (lb.)	LIST PRICE

➢➢**Factory Installed**➣➣ **Continued**

9824VE LIQUID FERTILIZER TANK PACKAGES

Note: CF12 - 90 Bushel CFS for 16 & 24 Row allows the use of 500 Gallon Fertilizer Tank Package
If Rear Tow Hitch is required, must order Dealer Installed 6001228

35-UN08	6401485	500 Gallon (1893 L) Liquid Fertilizer Tank (Mounting Cradle)	4,080.00
35-UN25	6401485	500 Gallon (1893 L) Liquid Fertilizer Tank (Mounting Cradle)	4,080.00
	6401519	Dual Piston Pump and Contact Wheel Drive	5,870.00
	6401505	Tank Plumbing to Dual Piston Pump	843.00
	6401516	Pump Outlet Plumbing with Orificed Boom Sections	2,410.00
35-UN27	6401485	500 Gallon (1893 L) Liquid Fertilizer Tank (Mounting Cradle)	4,080.00
	6401519	Dual Piston Pump and Contact Wheel Drive	5,870.00
	6401505	Tank Plumbing to Dual Piston Pump	843.00
	6401513	Pump Outlet Plumbing	500.00
	6400216	Flow Divider	3,917.00
35-UN28	6401485	500 Gallon (1893 L) Liquid Fertilizer Tank (Mounting Cradle)	4,080.00
	6401539	Centrifugal Pump and Variable Rate Drive	6,612.00
	6401493	Tank Plumbing for Centrifugal Pump	1,671.00
	6401358	Pump Outlet Plumbing with Orificed Boom Sections	2,410.00
	6401857	ISO System for Electric Drive	2,380.00
35-UN30	6401485	500 Gallon (1893 L) Liquid Fertilizer Tank (Mounting Cradle)	4,080.00
	6401524	Electric Pump and Variable Rate Drive	388.00
	6401525	Tank Plumbing for Electric Pump	1,580.00
	6401358	Pump Outlet Plumbing with Orificed Boom Sections	2,410.00
	6401857	ISO System for Electric Drive	2,380.00
35-UN29	6401485	500 Gallon (1893 L) Liquid Fertilizer Tank (Mounting Cradle)	4,080.00
	6401539	Centrifugal Pump and Variable Rate Drive	6,612.00
	6401493	Tank Plumbing for Centrifugal Pump	1,671.00
	6401495	Pump Outlet Plumbing	500.00
	6400216	Flow Divider	3,917.00
	6401857	ISO System for Electric Drive	2,380.00
35-UN31	6401485	500 Gallon (1893 L) Liquid Fertilizer Tank (Mounting Cradle)	4,080.00
	6401524	Electric Pump and Variable Rate Drive	388.00
	6401525	Tank Plumbing for Electric Pump	1,580.00
	6401495	Pump Outlet Plumbing	500.00
	6400216	Flow Divider	3,917.00
	6401857	ISO System for Electric Drive	2,380.00

Tow Behind - Requires Factory Installed Rear Tow Hitch

35-UN20	6401519	Dual Piston Pump and Contact Wheel Drive	5,870.00
	6401541	Plumbing Kit for Tow Behind	394.00
	6401513	Pump Outlet Plumbing	500.00
	6400216	Flow Divider	3,917.00

ORDER CODE	CATALOG NUMBER	DESCRIPTION	APPROX. WEIGHT (lb.)	LIST PRICE

➢➢Factory Installed➣➣ REAR TOW HITCH - Order One per Planter — Required

24-Row Planters

31-P700	6400266	Without Tow Hitch for 90 Bushel CFS	25	No Charge
31-P709	6400268	Rear Tow Hitch for 90 Bushel CFS		1,314.00

Note: Rear Tow Hitch is for towing up to 2,000 gallon (7570L) Liquid Fertilizer Tank

Note: CF12 Central Fill with 500 Gallon Liquid Fertilizer Tanks, if require Rear Tow Hitch, must order Dealer Installed 6001228

ORDER CODE	CATALOG NUMBER	DESCRIPTION	APPROX. WEIGHT (lb.)	LIST PRICE
➢➢**Factory Installed**➣➣ **FERTILIZER OPENER PACKAGES**				**Optional**
<u>Fertilizer Openers - Includes Mounting Brackets</u> - Order One Per Planter				
12-Row Planter				
19-K202	6400906	Single Disc Fertilizer Openers - Liquid Side Knife		9,847.00
19-K201	6400907	Double Disc Fertilizer Openers		6,766.00
16-Row Planter				
19-K202	6400775	Single Disc Fertilizer Openers - Liquid Side Knife		13,129.00
19-K201	6400772	Double Disc Fertilizer Openers		9,022.00
24-Row Planter				
19-K202	6400776	Single Disc Fertilizer Openers - Liquid Side Knife		19,695.00
19-K201	6400773	Double Disc Fertilizer Openers		13,533.00

Note: Single Disc Side Knife Fertilizer Opener is Not for Use with Row Unit Mounted Tillage Coulter/ Residue Manager Combo.

◆◆**Dealer Installed**◆◆**<u>Liquid Fertilizer Opener Hose</u>**

	6100200	Roll of Fertilizer Opener Hose, 3/8 inch x 48 Feet (Order 4 Rolls for 9812VE, 6 Rolls for 9816VE, and 8 Rolls for 9824VE)	92.00

ORDER CODE	CATALOG NUMBER	DESCRIPTION	APPROX. WEIGHT (lb.)	LIST PRICE

◆◆Dealer Installed◆◆ Liquid Fertilizer Attachment - Order One per Planter or See Item for Order Quantity — Optional

How To Order Dealer Installed Liquid Fertilizer Attachment:

1. Order 1 Liquid Fertilizer Tank (Includes Brackets).
2. Order Rear Tow Hitch if desired
3. Order Tank Plumbing Kit if desired
4. Order Single or Double Piston Pump and Contact Wheel Drive
5. Order Pump Plumbing Package
6. Order Flow Divider or Outlet Manifold
7. Order Opener Hose
8. Order Fertilizer Openers and Mounting Brackets if desired. See page 78

Liquid Fertilizer Tanks and Mounting Brackets

6001394	300 Gallon (1136 L) Liquid Fertilizer Tank , 9812VE		2,749.00

Rear Tow Hitch - For Towing up to 2,000 Gallon (7570 L) Liquid Fertilizer Tank

6001393	Rear Tow Hitch for 9812VE with Tow-Behind Liquid Fertilizer Plumbing		1,708.00
6001228	Rear Tow Hitch for 9816VE and 9824VE	280	1,314.00

Tank Plumbing Kit - Includes Hoses and Fittings

6001465	Tank Plumbing Kit For 300 Gallon, 9812VE		789.00
6001219	Tank Plumbing Kit For Tow-Behind Liquid Fertilizer Tank, 9816VE, 9824VE	30	393.00

Fertilizer Pumps and Drives

6001446	Single Piston Pump and Contact Wheel Drive, 9812VE		3,961.00
6001856	Single Piston Pump and Contact Wheel Drive, 9816VE	65	4,072.00
6001857	Double Piston Pump and Contact Wheel Drive, 9824VE	110	5,095.00
6001463	Contact Wheel Drive without Pump, 9812VE	115	1,976.00
6001855	Contact Wheel Drive without Pump, 9816VE and 9824VE	115	1,976.00

Fertilizer Drive Lock-Up

6001487	Fertilizer Drive Lock-Up, 9812VE		151.00

Pump Plumbing Kit - Single or Double Piston Pumps

Piston Pump Plumbing Kit requires Flow Divider or Outlet Manifold

(Includes Fittings and Hose to Flow Divider or Outlet Manifold)

6001086	Piston Pump Plumbing Kit, 9816VE	5	256.00
6001220	Piston Pump Plumbing Kit, 9824VE	15	499.00

Flow Divider or Outlet Manifold Completing Package - Required for Piston Pump Only

6001454	12 Row Flow Divider		1,958.00
6000647	16 Row Flow Divider		2,865.00
6100199	12 Row Flow Divider (for use with 9824VE; Order Quantity 2)		1,958.00
6100219	16 Row Outlet Manifold (with Orifices and Check Valves)		1,484.00
6100195	12 Row Outlet Manifold (with Orifices and Check Valves) (Order Quantity 1 for 12 Row; Quantity 2 for 24 Row)		872.00

Liquid Fertilizer Opener Hose

6100200	Roll of Fertilizer Opener Hose, 3/8 inch x 48 Feet (Order 4 Rolls for 9812VE, 6 Rolls for 9816VE, and 8 Rolls for 9824VE)		92.00

ORDER CODE	CATALOG NUMBER	DESCRIPTION		APPROX. WEIGHT (lb.)	LIST PRICE
◆◆Dealer Installed◆◆ **Liquid Fertilizer Attachment**					**Optional**
Fertilizer Openers for Liquid Fertilizer - Order One per Two Row Units					
	6000527	Single Disc Fertilizer Opener - Liquid Side Knife			1,293.00
	6001486	Double Disc Opener-13-1/2 inch Diameter, 9812VE	75		803.00
	6100459	Double Disc Opener-13-1/2 inch Diameter, 9816VE,9824VE	75		803.00
Note: Single Disc Fertilizer Openers can not be used with Tillage/Coulter Residue Manager Combination					
Fertilizer Opener Mounting Brackets - Order One per Planter *(For use with Double Disc or Side Knife Fertilizer Openers Only)*					
	6001484	Fertilizer Opener Mounting Brackets for Double Disc, 9812VE			3,378.00
	6001485	Fertilizer Opener Mounting Brackets for Single Disc, 9812VE			3,378.00
	6001215	Fertilizer Opener Mounting Brackets, 9816VE	340		3,097.00
	6001216	Fertilizer Opener Mounting Brackets, 9824VE			4,705.00
	6001068	Offset Shank Set for Single Disc Fertilizer Openers 9816VE and 9824VE only **Order One per Four Rows** (Required to Mount Liquid Side Knife)	101		240.00

9800 Narrow Transport Folding Planters

9800 Narrow Transport Folding Planters

F.O.B. Hesston, Kansas

STANDARD EQUIPMENT

- Cental Fill System with 90 Bushel, 2 Section, Central Seed Hopper and Seed Distribution System
- Hopper Version with 2 or 3 Bushel Individual Row Unit Seed Hoppers
- 7" x 7" Forward Folding Frame with Hydraulic Cylinders, Hoses and Frame Lock
- Hydraulic Lift with all Cylinders, Hoses, and Transport Lock-Up
- Planter Units with: Air Metering, Chain Drive Seed Meter, 16" Double Disc Openers, 4.5" x 16" Walking Beam Gauge Wheels
- Highway Transport Lighting
- Seed Drain Kit

Ground Drive Planters:
- Central Blower, Manifold, Flow Control Valve and Air Pressure Gauge, Blower Inlet Screen
- ISO Seed Monitoring

Hydraulic Drive Planters:
- Central Blower, Manifold, Couplers for Direct Drive, Flow Control Valve and Air Pressure Gauge (Uses Tractor Hyd.- Requires min. 30 GPM @ 2000psi with PTO Pump)
- Micro Processor Controlled Variable Rate Hydraulic Drive
- Half Width Disconnect (9816 and 9824)
- Seed Drive Disconnect - Implement Lift Switch
- ISO Control and Seed Monitoring

Transport and Carrying Wheels / Tires
WP9812 - (6) 10:00-15 (TL) Load Range D
WP9816 - (8) 295/75R22.5, 16 Ply
WP9824 - (10) 295/75R22.5, 16 Ply

Requirements For 9812
Central Fill System
- 2 Tractor Remotes if Using 40 GPM PTO Pump and Reservoir
- 3 Tractor Remotes If Using Direct Drive

For 2 and 3 Bushel Hopper
- 3 Tractor Remotes if Using Direct Drive

Requirements For 9816 and 9824
Central Fill System
- 3 Tractor Remotes if Using 14 GPM PTO Pump and Reservoir
- 4 Tractor Remotes If Using Direct Drive

For 2 and 3 Bushel Hopper
- 2 Tractor Remotes if Using 14 GPM PTO Pump and Reservoir
- 3 Tractor Remotes If Using Direct Drive

Shipping Dimensions

	Length	Height	Width	Weight
WP9812 2-Pt	31' 2"	10' 0"	11' 8"	13,500
WP9816 2-Pt	34' 4"	11' 10"	11' 8"	16,800
WP9816 DB	36' 0"	11' 10"	11' 8"	16,800
WP9824 2-Pt	45' 2"	11' 10"	11' 8"	24,800
WP9824 DB	46' 10"	11' 10"	11' 8"	24,800

Central Fill System (CFS) planters are designed for planting corn, soybeans, milo and popcorn. Large, Small, and Blank Seed Meter Screens are Included with CFS.

Transport and Frame Dimensions

# Rows	Spacing	Center Frame	Wings	Transport Width	Tongue Wt., Full	Transport Wheels	Total Wheels
12	30"	135"	10'	12'	9,970 lbs	4	6
16	30"	135"	14'	12'	9,970 lbs	4	8
24	30"	135"	24'	12'	10,700 lbs	4	10

Ordering Instructions:
Planters are now available with many items Factory Installed.
Factory Installed items are not eligible for return to the factory.

1. Select One Order Code from Base, and One Order Code from Each Group as Required.
2. Order Required Seed Discs from 9000 Series Dealer Installed Section.
3. Additional Dealer Installed Items can be Ordered for these Models from this Chapter and from 9000 Series Dealer Installed Section.
4. Accepts Row Unit Mounted Tillage Attachments Only.

ORDER CODE	CATALOG NUMBER	DESCRIPTION	APPROX. WEIGHT (lb.)	LIST PRICE
NARROW TRANSPORT FOLDING PLANTERS				
WP9812	9812903	12 Row 30-inch Planter	13500	62,688.00
WP9816	9816910	16 Row 30-inch Planter	16800	76,867.00
WP9824	9824909	24 Row 30-inch Planter	24800	133,616.00

ORDER CODE	CATALOG NUMBER	DESCRIPTION	APPROX. WEIGHT (lb.)	LIST PRICE
➢➢Factory Installed➣➣		**MARKERS - Order One per Planter**		**Required**
Two Point Hitch for 12 Row				
2-P214	6400783	Bi-Fold Break-Away Markers with Notched Marker Discs		6,791.00
2-P202	6400782	Without Markers.		No Charge
Two Point Hitch for 16 Row				
2-P214	6401534	Tri-Fold Break-Away Markers with Notched Marker Discs	1544	11,337.00
2-P202	6401533	Without Markers.		No Charge
Two Point Hitch for 24 Row				
2-P204	6401530	Tri Fold Break-Away Markers with Notched Marker Discs	1544	13,380.00
2-P203	6401529	Without Markers.		No Charge
Drawbar Hitch for 16 Row				
2-P215	6401536	Tri-Fold Break-Away Markers with Notched Marker Discs	2950	14,832.00
2-P217	6401535	Without Markers.		4,832.00
Drawbar Hitch for 24 Row				
2-P216	6401532	Tri Fold Break-Away Markers with Notched Marker Discs	2950	16,877.00
2-P218	6401531	Without Markers.		5,543.00
◆◆Dealer Installed◆◆		**WEIGHT BRACKETS - Order One per Planter**		**Optional**
	6001488	Marker Weight Bracket (Set of 2), 9812 Mounts Weights to Marker	53	160.00
	6001493	Weight Bracket (Set of 2), 9816 To Add Weights for Without Markers Option	21	425.00
	6001940	Weight Bracket (Set of 2), 9824 To Add Weights for Without Markers Option	21	425.00
◆◆Dealer Installed◆◆		**WEIGHTS - Order One per Planter**		**Optional**
	6001451	Suitcase Weights (Set of 8 Weights) 125 lbs (55 kg) Each For use with Weight Brackets above	1000	1,500.00
➢➢Factory Installed➣➣		**CENTRAL FILL SYSTEM - Order One per Planter** **Includes Seed Meters and Mini-Hoppers**		**Required**

Note: CF11 - 90 Bushel CFS for 12 Row allows the use of 300 Gallon Fertilizer Tank Package
CF11 - 90 Bushel CFS for 16 and 24 Row - No Fertilizer Tank Package Allowed
CF12 - 90 Bushel CFS for 16 and 24 Row allows the use of 500 Gallon Fertilizer Tank Package
CF10 - With 2 and 3 Bushel Hoppers, allows the use of 750 Gallon Fertilizer Tank Package

18-CF11	6401086	90 Bushel Central Fill System for 12 Row.	23,999.00
18-CF11	6400820	90 Bushel Central Fill System for 16 Row.	25,494.00
18-CF11	6400829	90 Bushel Central Fill System for 24 Row.	27,408.00
18-CF12	6401481	90 Bushel Central Fill System for 16 Row.	25,494.00
18-CF12	6401482	90 Bushel Central Fill System for 24 Row.	27,408.00
18-CF10	6401085	No Central Fill System for 12 Row (Order Seed Hopper on Next Page)	No Charge
18-CF10	6400174	No Central Fill System for 16 and 24 Row (Order Seed Hopper on Next Page)	No Charge

ORDER CODE	CATALOG NUMBER	DESCRIPTION	APPROX. WEIGHT (lb.)	LIST PRICE
➢➢**Factory Installed**➣➣		**SEED HOPPERS AND METERS - Order One per Planter**		**Required**
12-Row Planter				
5-HO12	6400886	Set of 12 Two-Bushel Hoppers and Meters		9,510.00
5-HO13	6400887	Set of 12 Thee-Bushel Hoppers and Meters		11,152.00
5-HO10	6400903	Without Hoppers and Meters		No Charge
16-Row Planter				
5-HO12	6400799	Set of 16 Two-Bushel Hoppers and Meters		12,680.00
5-HO13	6400800	Set of 16 Three-Bushel Hoppers and Meters		14,869.00
5-HO10	6400802	Without Hoppers and Meters		No Charge
24-Row Planter				
5-HO12	6400835	Set of 24 Two-Bushel Hoppers and Meters		19,020.00
5-HO13	6400836	Set of 24 Three-Bushel Hoppers and Meters		22,305.00
5-HO10	6400834	Without Hoppers and Meters		No Charge
➢➢**Factory Installed**➣➣		**SEED METER DRIVE - Order One per Planter**		**Required**
12-Row Planter				
3-D702	6400389	Flex Shaft Drive (Includes Electric Clutch for Each Row)		6,900.00
3-D701	6400386	Chain Drive Without Auto Row Shut-Off		No Charge
16-Row Planter				
3-D702	6401029	Flex Shaft Drive (Includes Electric Clutch for Each Row)		9,200.00
3-D701	6400817	Chain Drive Without Auto Row Shut-Off		No Charge
24-Row Planter				
3-D702	6400828	Flex Shaft Drive (Includes Electric Clutch for Each Row)		13,800.00
3-D701	6400827	Chain Drive Without Auto Row Shut-Off		No Charge

Notes on Ordering Flex Shaft
- Requires: 6001400 Communication Module below.
- To Add Auto Row Shut-Off Feature, Order 6001396 C3000 Terminal / Monitor and 10 Hz or Stronger GPS Receiver
- Flex Shaft is Not Compatible with Section Control Half-Width Shut-Off or Standard Duty Down Pressure Springs

◆◆**Dealer Installed**◆◆		**Communication Module Required to Operate Flex Shaft Above**		**Optional**
	6001400	Communication Module with 6 Programmable Toggle Switches for use with Flex Shaft Seed Meter Drive. Six Toggle Switches Provide Manual Control for Six Sections		509.00

Note: The programmable communication module with toggle switches also provides manual back-up when using the Auto Row Shut-Off feature of the C3000 Terminal / Monitor if GPS signal is lost.

ORDER CODE	CATALOG NUMBER	DESCRIPTION	APPROX. WEIGHT (lb.)	LIST PRICE
➢➢Factory Installed➣➣ DRIVE - Order One per Planter				**Required**
20-DO11	6401672	Hydraulic Drive, 12 Row		1,803.00
20-DO10	6401671	Ground Drive, 12 Row		No Charge
20-DO11	6401675	Hydraulic Drive, 16 Row		5,424.00
20-DO12	6401673	Dual Ground Drive, 16 Row		1,590.00
20-DO11	6401676	Hydraulic Drive, 24 Row		5,424.00
20-DO12	6401674	Dual Ground Drive, 24 Row		1,590.00

Notes on Ordering Hydraulic Drive: Also Requires Radar Distance Sensing or Radar "Y" Harness from page 67

Note: Model 9812: Seed Meter Blower Mounted Oil Coolers not Provided.
Models 9816 and 9824: Seed Meter Blower Mounted Oil Coolers not Provided with Ground Drive, Direct Drive and Hoses.

➢➢Factory Installed➣➣ HYDRAULIC SUPPLY SYSTEM - Order One per Planter **(Also Order from PTO Pump Adapter Group as Required)**				**Required**
9812 With Hydraulic Drive, With CFS				
21-P801	6401084	40 GPM PTO Pump with 25 Gallon Reservoir and 1-3/8 inch PTO Spline Shaft (Does not Require PTO Pump Adaptor)		4,368.00
21-P812	6401087	Direct Drive and Hoses (Uses Existing Tractor Hydraulics)	30	250.00
9812 With Ground Drive, With CFS				
21-P812	6401087	Direct Drive and Hoses (Uses Existing Tractor Hydraulics)	30	250.00
9812 With Ground Drive or Hydraulic Drive, Without CFS				
21-P802	6401083	Direct Drive and Hoses (Uses Existing Tractor Hydraulics)	30	250.00
9816 and 9824 With Hydraulic Drive				
21-P801	6400193	14 GPM PTO Pump with 8.5 Gallon Reservoir **(For Use with 2-Point Hitch)** (Requires PTO Pump Adapter Below)		2,067.00
21-P807	6400231	14 GPM PTO Pump with 8.5 Gallon Reservoir **(For Use with Drawbar)** (Requires PTO Pump Adapter Below)	100	2,067.00
9816 and 9824 With Hydraulic, Ground or Dual Ground Drive				
21-P802	6400199	Direct Drive and Hoses (without oil coolers) (Uses Existing Tractor Hydraulics)	30	148.00
◆◆Dealer Installed◆◆ PTO PUMP ADAPTER - Order One per Planter				**Required**
	6000747	1000 RPM PTO Pump Adapter for 1-3/4 in Shaft (For use with 21-P801 or 21-P807 on 9816 and 9824)		167.00
	6000748	1000 RPM PTO Pump Adapter for 1-3/8 in Shaft (For use with 21-P801 or 21-P807 on 9816 and 9824)		167.00
	6000777	Without PTO Pump Adapter (For Use with 21-P812 and 21-P802)		No Charge

ORDER CODE	CATALOG NUMBER	DESCRIPTION	APPROX. WEIGHT (lb.)	LIST PRICE
➢➢**Factory Installed**➣➣		**SEED TUBES AND SENSORS - Order One per Planter**		**Required**
12-Row Planter				
16-P301	6400884	Seed Tubes with High Rate Sensors		2,202.00
16-P303	6400885	Seed Tubes with Seed Smart Sensors		3,615.00
16-Row Planter				
16-P301	6400814	Seed Tubes with High Rate Sensors		2,937.00
16-P303	6400815	Seed Tubes with Seed Smart Sensors		4,820.00
24-Row Planter				
16-P301	6400832	Seed Tubes with High Rate Sensors		4,405.00
16-P303	6400833	Seed Tubes with Seed Smart Sensors		7,231.00
➢➢**Factory Installed**➣➣		**CLOSING SYSTEM - Order One per Planter**		**Required**
NOTE: Angled Closing Wheels are factory installed in the staggered position with the left wheel forward and with two spacers under the wheels.				
12-Row Planter				
12-LR11	6400890	Angled Bracket with Rubber Closing Wheels	19	3,451.00
12-LR12	6400891	Angled Bracket with Cast Closing Wheels	54	3,972.00
12-LR13	6400892	Angled Bracket Without Closing Wheels (Order Closing Wheels from 9000 Series Dealer Installed Section)		1,948.00
12-LR10	6400803	Without Closing Wheels		No Charge
16-Row Planter				
12-LR11	6400804	Angled Bracket with Rubber Closing Wheels	19	4,600.00
12-LR12	6400807	Angled Bracket with Cast Closing Wheels	54	5,296.00
12-LR13	6400806	Angled Bracket Without Closing Wheels (Order Closing Wheels from 9000 Series Dealer Installed Section)		2,597.00
12-LR10	6400803	Without Closing Wheels		No Charge
24-Row Planter				
12-LR11	6400838	Angled Bracket with Rubber Closing Wheels	19	6,900.00
12-LR12	6400839	Angled Bracket with Cast Closing Wheels	54	7,944.00
12-LR13	6400840	Angled Bracket Without Closing Wheels (Order Closing Wheels from 9000 Series Dealer Installed Section)		3,895.00
12-LR10	6400803	Without Closing Wheels		No Charge
◆◆**Dealer Installed**◆◆		**MONITOR SYSTEM - Order One per Planter**		**Required**
Requires 6000923 Radar Ground Speed and Distance Sensing Gun or 6100064 Radar "Y" Harness. **For Use on Tractor with Radar.** **If Tractor is Equipped with an Integrated C1000 Terminal / Monitor, Order 6000993**				
	6001396	C3000 Terminal / Monitor		5,299.00
	6001313	C1000 Terminal / Monitor		2,803.00
	6000993	Without Monitor (Order only if Tractor is Equipped with an Existing ISO Terminal / Monitor)		No Charge

NOTE: C3000 Terminal / Monitor required with Flex Shaft Seed Meter Drive

ORDER CODE	CATALOG NUMBER	DESCRIPTION	APPROX. WEIGHT (lb.)	LIST PRICE
◆◆Dealer Installed◆◆		**GROUND SPEED SENSOR - Order One per Planter**		**Required**
	6000923	Radar Ground Speed and Distance Sensing Gun	15	1,049.00
	6100064	Radar "Y" Harness (4 pin round tractor connector to 4 pin round monitor connector)		152.00
	6000810	Without Ground Speed and Distance Sensing (For Use with 6000100)		No Charge

Note: Part # 72515753 - Radar "Y" Harness
(4 pin flat tractor connector to a 4 pin round monitor connector)
(Above Two "Y" Harnesses for tractors equipped with Radar Speed Sensing)

➢➢Factory Installed➣➣		**SECTION CONTROL SHUT-OFF - Order One per Planter** **Not for use with Automatic Row Shut-Off** **Section Clutch Control incorporated in the Frame Fold Control Console**		**Required**
32-7P01	6400390	Without Section Control Half-Width Shut-Off, 9812		No Charge
32-7P01	6401500	Without Section Control Half-Width Shut-Off, 9816 and 9824, For use with Ground Drive		No Charge
32-7P01	6401091	Without Section Control Half-Width Shut-Off, 9816 and 9824, For use with Hydraulic Drive		No Charge
32-7P02	6400391	Section Control Half-Width Shut-Off, 9812 For use with Ground or Hydraulic Drive (Includes 2 Clutches)	20	2,228.00
32-7P02	6401501	Section Control Half-Width Shut-Off, 9816 For use with Ground Drive Only (Includes 2 Clutches)	20	2,228.00
32-7P02	6401502	Section Control Half-Width Shut-Off, 9824 For use with Ground Drive Only (Includes 2 Clutches)	20	2,228.00

➢➢Factory Installed➣➣		**DRIVE WHEEL MUD SCRAPERS - Order One per Planter**		**Optional**
Drive Wheel Mud Scrapers have a maximum Quantity of 6 on the WP9812, 8 on the WP9816 and 10 on the WP9824				
15-PH01	6400674	Drive Wheel Mud Scrapers (Set of 2) for 9812	30	369.00
15-PH01	6401483	Drive Wheel Mud Scrapers (Set of 2) for 9816 and 9824	30	369.00
15-PH04	6400881	Drive Wheel Mud Scrapers (Set of 6) for 9812	90	1,107.00
15-PH04	6401484	Drive Wheel Mud Scrapers (Set of 8) for 9816 and 9824	120	1,477.00

See Below for Additional Scrapers, Order 6001447, 6001230 for MY2015 or earlier, 6001941 for MY2016 and greater

◆◆Dealer Installed◆◆		**DRIVE WHEEL MUD SCRAPER - Order One for Each Wheel as Desired**	
Drive Wheel Mud Scrapers have a maximum Quantity of 6 on the WP9812, 8 on the WP9816 and 10 on the WP9824			
	6001447	Drive Wheel Mud Scraper, 9812, Quantity 1	184.00
	6001941	Drive Wheel Mud Scraper, 9816 and 9824, Quantity 1	184.00

ORDER CODE	CATALOG NUMBER	DESCRIPTION	APPROX. WEIGHT (lb.)	LIST PRICE
➢➢Factory Installed➣➣		**ADDITIONAL EQUIPMENT - Order One per Planter**		**Optional**
33-BZ01	6400779	Blower Inlet Screen, 9816 and 9824 (Hydraulic Drive Only)		198.00
7-PS01	6400902	Row Unit Gauge Wheel Scrapers, 9812		420.00
7-PS01	6400816	Row Unit Gauge Wheel Scrapers, 9816		560.00
7-PS01	6400851	Row Unit Gauge Wheel Scrapers, 9824		840.00
	71428520W	Ship Safe Preservative Coating (Recommended for Protection When Shipped in Winter Months)		604.00
◆◆Dealer Installed◆◆		**ADDITIONAL EQUIPMENT - Order One per Planter**		**Optional**
	6001306	Dual Ground Drive Transmission for 9816 or 9824		1,590.00
➢➢Factory Installed➣➣		**DOWN PRESSURE SYSTEM - Order One per Planter**		**Required**
12-Row Planter				
23-KB14	6400395	Pneumatic Down Pressure System Requires 6001466 Compressor Below	240	2,688.00
23-KB12	6400895	Heavy Duty Down Pressure Springs		2,432.00
23-KB11	6400894	Standard Duty Down Pressure Springs		789.00
23-KB10	6400027	Without Down Pressure Springs		No Charge
16-Row Planter				
23-KB14	6400819	Pneumatic Down Pressure System Requires 6001466 Compressor Below	340	3,584.00
23-KB12	6400811	Heavy Duty Down Pressure Springs	12	3,242.00
23-KB11	6400812	Standard Duty Down Pressure Springs	7	1,053.00
23-KB10	6400027	Without Down Pressure Springs		No Charge
24-Row Planter				
23-KB14	6400844	Pneumatic Down Pressure System Requires 6001466 Compressor Below	500	5,302.00
23-KB12	6400843	Heavy Duty Down Pressure Springs	12	4,864.00
23-KB11	6400842	Standard Duty Down Pressure Springs	7	1,579.00
23-KB10	6400027	Without Down Pressure Springs		No Charge
◆◆Dealer Installed◆◆		**COMPRESSOR - Order One per Planter**		**Optional**
	6001466	Pneumatic Down Pressure Compressor (Required with Factory Installed Only Pneumatic Down Pressure)	20	844.00

Notes: Standard Duty Down Pressure Springs are Not Compatible with Row Unit Mounted Attachments or Flex Shaft Drive.

ORDER CODE	CATALOG NUMBER	DESCRIPTION	APPROX. WEIGHT (lb.)	LIST PRICE

➢➢Factory Installed≺≺ ROW UNIT MOUNTED TILLAGE - Order One per Planter Required

Heavy Duty Down Pressure Springs or Pneumatic Down Pressure Recommended

12-Row Planter

25-VA10	6400021	Without Unit Mounted Tillage Attachment		No Charge
25-VA13	6400557	Tillage Coulter with Ripple Blade		3,793.00
25-VA15	6400573	Tillage Coulter with 13 Flute Blade		3,793.00
25-VA18	6400581	Tillage Coulter with 25 Flute Blade		3,793.00
25-VA16	6400896	Residue Manager - Finger Wheel 13-inch Steel Wheel with 16 Fingers (For use without Tillage Coulters)		4,608.00
25-VA19	6400897	Residue Manager - SharkTooth® Wheel 13-inch Steel Wheel with 12 Teeth (For Use without Tillage Coulters)		4,978.00
25-VA20	6400898	Floating Residue Manager - SharkTooth® Wheel with Depth Band, 13-inch Steel Wheel with 12 Teeth (For Use without Tillage Coulters)		6,748.00
25-VA11	6400541	Tillage Coulter without Blade (Order Coulter Blades from 9000 Series Dealer Installed Section)		3,272.00

16-Row Planter

25-VA10	6400021	Without Unit Mounted Tillage Attachment		No Charge
25-VA13	6400558	Tillage Coulter with Ripple Blade	41	5,058.00
25-VA15	6400574	Tillage Coulter with 13 Flute Blade	37	5,058.00
25-VA18	6400582	Tillage Coulter with 25 Flute Blade		5,058.00
25-VA16	6400424	Residue Manager - Finger Wheel 13-inch Steel Wheel with 16 Fingers (For Use without Tillage Coulters)	37	6,145.00
25-VA19	6400439	Residue Manager - SharkTooth® Wheel 13-inch Steel Wheel with 12 Teeth (For Use without Tillage Coulters)		6,637.00
25-VA20	6400809	Floating Residue Manager - SharkTooth® Wheel with Depth Band, 13-inch Steel Wheel with 12 Teeth (For Use without Tillage Coulters)		8,996.00
25-VA11	6400542	Tillage Coulter without Blade (Order Coulter Blades from 9000 Series Dealer Installed Section)		4,362.00

24-Row Planter

25-VA10	6400021	Without Unit Mounted Tillage Attachment		No Charge
25-VA13	6400560	Tillage Coulter with Ripple Blade	41	7,588.00
25-VA15	6400576	Tillage Coulter with 13 Flute Blade	37	7,588.00
25-VA18	6400584	Tillage Coulter with 25 Flute Blade		7,588.00
25-VA16	6400845	Residue Manager - Finger Wheel 13-inch Steel Wheel with 16 Fingers (For use without Tillage Coulters)	37	9,217.00
25-VA19	6400846	Residue Manager - SharkTooth® Wheel 13-inch Steel Wheel with 12 Teeth (For Use without Tillage Coulters)		9,956.00
25-VA20	6400847	Floating Residue Manager - SharkTooth® Wheel with Depth Band, 13-inch Steel Wheel with 12 Teeth (For Use without Tillage Coulters)		13,495.00
25-VA11	6400544	Tillage Coulter without Blade (Order Coulter Blades from 9000 Series Dealer Installed Section)		6,544.00

ORDER CODE	CATALOG NUMBER	DESCRIPTION	APPROX. WEIGHT (lb.)	LIST PRICE

➢➢Factory Installed➣➣ COMBINATION RESIDUE MANAGER - Order 1 per Planter — Optional

Requires Factory Installed Row Unit Mounted Tillage Coulter (VA13, VA15, VA18 or VA11)
Recommend Heavy Duty Down Pressure Springs or Pneumatic Down Pressure.

12-Row Planter

26-K102	6400597	Residue Manager Attachment 10-inch Steel Wheel with 16 Fingers and Bearing Shields	4,608.00
26-K103	6400605	Residue Manager Attachment 13-inch Steel Wheel with 16 Fingers and Bearing Shields	4,608.00
26-K104	6400613	Residue Manager Attachment 13-inch Steel SharkTooth® Wheel with 12 Teeth	4,570.00
26-K101	6400589	Residue Manager without Spoke Wheels (Order Wheels from 9000 Series Dealer Installed Section)	1,145.00

16-Row Planter

26-K102	6400598	Residue Manager Attachment 10-inch Steel Wheel with 16 Fingers and Bearing Shields	6,145.00
26-K103	6400606	Residue Manager Attachment 13-inch Steel Wheel with 16 Fingers and Bearing Shields	6,145.00
26-K104	6400614	Residue Manager Attachment 13-inch Steel SharkTooth® Wheel with 12 Teeth	6,093.00
26-K101	6400590	Residue Manager without Spoke Wheels (Order Wheels from 9000 Series Dealer Installed Section)	1,527.00

24-Row Planter

26-K102	6400600	Residue Manager Attachment 10-inch Steel Wheel with 16 Fingers and Bearing Shields	9,217.00
26-K103	6400608	Residue Manager Attachment 13-inch Steel Wheel with 16 Fingers and Bearing Shields	9,217.00
26-K104	6400616	Residue Manager Attachment 13-inch Steel SharkTooth® Wheel with 12 Teeth	9,140.00
26-K101	6400592	Residue Manager without Spoke Wheels (Order Wheels from 9000 Series Dealer Installed Section)	2,292.00

◆◆Dealer Installed◆◆ GRANULAR INSECTICIDE ATTACHMENT — Optional

Granular Insecticide Attachment - Order One Per Two Rows

NOTE: Not for use with Flex Shaft Seed Meter Drive or Row Unit Lock-up Option

6001843	Granular Insecticide Kit with Brackets. For use with 2 Bushel Hoppers Only (Not for use with 3 Bushel Hoppers)	1,236.00
6001844	Granular Insecticide Kit with Brackets. For use with CFS Mini-Hoppers Only (Not for use with 2 or 3 Bushel Hoppers)	1,236.00

ORDER CODE	CATALOG NUMBER	DESCRIPTION	APPROX. WEIGHT (lb.)	LIST PRICE

➢➢Factory Installed≺≺ LIQUID FERTILIZER TANK PACKAGES - Order One per Planter — Optional

Factory Installed Items Are Not Eligible for Return to the Factory

Liquid Fertilizer Attachment (Without Openers)

How To Order Factory Installed Liquid Fertilizer Attachment

(Opener Hose is Dealer Installed)

1. Order 1 Liquid Fertilizer Package. Tanks Include Mounting Brackets.
2. Order Rear Tow Hitch.
3. Order Fertilizer Openers as desired. See page 76
4. Order Opener Hose (Dealer Installed).

Note: CF11 - 90 Bushel CFS for 12 Row allows the use of 300 Gallon Fertilizer Tank Package
CF11 - 90 Bushel CFS for 16 & 24 Row - No Fertilizer Tank Package Allowed
CF12 - 90 Bushel CFS for 16 & 24 Row allows the use of 500 Gallon Fertilizer Tank Package
CF10 - With 2 and 3 Bushel Hoppers, allows the use of 750 Gallon Fertilizer Tank Package

9812 LIQUID FERTILIZER TANK PACKAGES

Note: CF11 - 90 Bushel CFS for 12 Row allows the use of 300 Gallon Fertilizer Tank Package

35-UN08	6400404	300 Gallon (1136 L) Liquid Fertilizer Tank	2,749.00
35-UN11	6400404	300 Gallon (1136 L) Liquid Fertilizer Tank	2,749.00
	6400397	Single Piston Pump and Contact Wheel Drive	6,052.00
	6400401	Tank Plumbing Package	789.00
	6400882	Outlet Manifold with Orifices	872.00
35-UN14	6400404	300 Gallon (1136 L) Liquid Fertilizer Tank	2,749.00
	6400397	Single Piston Pump and Contact Wheel Drive	6,052.00
	6400401	Tank Plumbing Package	789.00
	6400883	Flow Divider	1,958.00

Note: CF10 - With 2 and 3 Bushel Hoppers, allows the use of 750 Gallon Fertilizer Tank Package

35-UN02	6400208	750 Gallon (2839 L) Liquid Fertilizer Tank	4,080.00
35-UN12	6400208	750 Gallon (2839 L) Liquid Fertilizer Tank	4,080.00
	6400397	Single Piston Pump and Contact Wheel Drive	6,052.00
	6400398	Tank Plumbing Package	899.00
	6400882	Outlet Manifold with Orifices	872.00
35-UN15	6400208	750 Gallon (2839 L) Liquid Fertilizer Tank	4,080.00
	6400397	Single Piston Pump and Contact Wheel Drive	6,052.00
	6400398	Tank Plumbing Package	899.00
	6400883	Flow Divider	1,958.00

Tow Behind - Requires Factory Installed Rear Tow Hitch

35-UN17	6400397	Single Piston Pump and Contact Wheel Drive	6,052.00
	6400882	Outlet Manifold with Orifices	872.00
35-UN19	6400397	Single Piston Pump and Contact Wheel Drive	6,052.00
	6400883	Flow Divider	1,958.00

➢➢Factory Installed≺≺ REAR TOW HITCH - Order One per Planter — Required

12-Row Planter

31-P700	6400266	Without Tow Hitch for 90 Bushel CFS 25	No Charge
31-P710	6400267	Without Tow Hitch for 2 and 3 Bushel Hoppers	No Charge
31-P711	6400445	Rear Tow Hitch with Fertilizer Plumbing for 2 and 3 Bushel Hoppers as well as 90 Bushel CFS	1,708.00

Note: Rear Tow Hitch is for towing up to 2,000 gallon (7570L) Liquid Fertilizer Tank

ORDER CODE	CATALOG NUMBER	DESCRIPTION	APPROX. WEIGHT (lb.)	LIST PRICE

➢➢**Factory Installed**➣➣ **Continued**

9816 LIQUID FERTILIZER TANK PACKAGES

Note: CF12 - 90 Bushel CFS for 16 & 24 Row allows the use of 500 Gallon Fertilizer Tank Package
If Rear Tow Hitch is required, must order Dealer Installed 6001228

35-UN08	6401485	500 Gallon (1893 L) Liquid Fertilizer Tank (Mounting Cradle)	4,080.00
35-UN24	6401485	500 Gallon (1893 L) Liquid Fertilizer Tank (Mounting Cradle)	4,080.00
	6401503	Single Piston Pump and Contact Wheel Drive	3,895.00
	6401504	Tank Plumbing to Single Piston Pump	803.00
	6401515	Pump Outlet Plumbing with Orificed Boom Sections	1,788.00
35-UN26	6401485	500 Gallon (1893 L) Liquid Fertilizer Tank (Mounting Cradle)	4,080.00
	6401503	Single Piston Pump and Contact Wheel Drive	3,895.00
	6401504	Tank Plumbing to Single Piston Pump	803.00
	6401523	Pump Outlet Plumbing	256.00
	6400213	Flow Divider	2,865.00
35-UN28	6401485	500 Gallon (1893 L) Liquid Fertilizer Tank (Mounting Cradle)	4,080.00
	6401538	Centrifugal Pump and Variable Rate Drive	6,612.00
	6401493	Tank Plumbing for Centrifugal Pump	1,671.00
	6401526	Pump Outlet Plumbing with Orificed Boom Sections	2,048.00
35-UN30	6401485	500 Gallon (1893 L) Liquid Fertilizer Tank (Mounting Cradle)	4,080.00
	6401524	Electric Pump and Variable Rate Drive	388.00
	6401525	Tank Plumbing for Electric Pump	1,580.00
	6401526	Pump Outlet Plumbing with Orificed Boom Sections	2,048.00
35-UN29	6401485	500 Gallon (1893 L) Liquid Fertilizer Tank (Mounting Cradle)	4,080.00
	6401538	Centrifugal Pump and Variable Rate Drive	6,612.00
	6401493	Tank Plumbing for Centrifugal Pump	1,671.00
	6401494	Pump Outlet Plumbing	256.00
	6400213	Flow Divider	2,865.00
35-UN31	6401485	500 Gallon (1893 L) Liquid Fertilizer Tank (Mounting Cradle)	4,080.00
	6401524	Electric Pump and Variable Rate Drive	388.00
	6401525	Tank Plumbing for Electric Pump	1,580.00
	6401494	Pump Outlet Plumbing	256.00
	6400213	Flow Divider	2,865.00

ORDER CODE	CATALOG NUMBER	DESCRIPTION	APPROX. WEIGHT (lb.)	LIST PRICE

➢➢Factory Installed➣➣ Continued

9816 LIQUID FERTILIZER TANK PACKAGES

Note: CF10 - With 2 and 3 Bushel Hoppers, allows the use of 750 Gallon Fertilizer Tank Package

35-UN02	6400208	750 Gallon (2839 L) Liquid Fertilizer Tank	4,080.00
35-UN12	6400208	750 Gallon (2839 L) Liquid Fertilizer Tank	4,080.00
	6401503	Single Piston Pump and Contact Wheel Drive	3,895.00
	6401508	Tank Plumbing to Single Piston Pump	803.00
	6401537	Pump Outlet Plumbing with Orificed Boom Sections	1,788.00
35-UN15	6400208	750 Gallon (2839 L) Liquid Fertilizer Tank	4,080.00
	6401503	Single Piston Pump and Contact Wheel Drive	3,895.00
	6401508	Tank Plumbing to Single Piston Pump	803.00
	6401523	Pump Outlet Plumbing	256.00
	6400213	Flow Divider	2,865.00
35-UN32	6400208	750 Gallon (2839 L) Liquid Fertilizer Tank	4,080.00
	6401538	Centrifugal Pump and Variable Rate Drive	6,612.00
	6401512	Tank Plumbing for Centrifugal Pump	1,254.00
	6401514	Pump Outlet Plumbing with Orificed Boom Sections	1,788.00
35-UN33	6400208	750 Gallon (2839 L) Liquid Fertilizer Tank	4,080.00
	6401524	Electric Pump and Variable Rate Drive	388.00
	6401527	Tank Plumbing for Electric Pump	1,156.00
	6401514	Pump Outlet Plumbing with Orificed Boom Sections	1,788.00
Tow Behind - Requires Factory Installed Rear Tow Hitch			
35-UN19	6401503	Single Piston Pump and Contact Wheel Drive	3,895.00
	6401540	Plumbing Kit for Tow Behind	394.00
	6401523	Pump Outlet Plumbing	256.00
	6400213	Flow Divider	2,865.00

➢➢Factory Installed➣➣ REAR TOW HITCH - Order One per Planter Required

16 Row Planters

31-P710	6400267	Without Tow Hitch for 2 and 3 Bushel Hoppers		No Charge
31-P700	6400266	Without Tow Hitch for 90 Bushel CFS	25	No Charge
31-P708	6400207	Rear Tow Hitch for 2 and 3 Bushel Hoppers	270	1,314.00
31-P709	6400268	Rear Tow Hitch for 90 Bushel CFS		1,314.00

Note: Rear Tow Hitch is for towing up to 2,000 gallon (7570L) Liquid Fertilizer Tank

Note: CF12 Central Fill with 500 Gallon Liquid Fertilizer Tanks, if require Rear Tow Hitch, must order Dealer Installed 6001228

ORDER CODE	CATALOG NUMBER	DESCRIPTION	APPROX. WEIGHT (lb.)	LIST PRICE

➢➢**Factory Installed**➣➣ **Continued**

9824 LIQUID FERTILIZER TANK PACKAGES

Note: CF12 - 90 Bushel CFS for 16 & 24 Row allows the use of 500 Gallon Fertilizer Tank Package
If Rear Tow Hitch is required, must order Dealer Installed 6001228

35-UN08	6401485	500 Gallon (1893 L) Liquid Fertilizer Tank (Mounting Cradle)	4,080.00
35-UN25	6401485	500 Gallon (1893 L) Liquid Fertilizer Tank (Mounting Cradle)	4,080.00
	6401519	Dual Piston Pump and Contact Wheel Drive	5,870.00
	6401505	Tank Plumbing to Dual Piston Pump	843.00
	6401516	Pump Outlet Plumbing with Orificed Boom Sections	2,410.00
35-UN27	6401485	500 Gallon (1893 L) Liquid Fertilizer Tank (Mounting Cradle)	4,080.00
	6401519	Dual Piston Pump and Contact Wheel Drive	5,870.00
	6401505	Tank Plumbing to Dual Piston Pump	843.00
	6401513	Pump Outlet Plumbing	500.00
	6400216	Flow Divider	3,917.00
35-UN28	6401485	500 Gallon (1893 L) Liquid Fertilizer Tank (Mounting Cradle)	4,080.00
	6401539	Centrifugal Pump and Variable Rate Drive	6,612.00
	6401493	Tank Plumbing for Centrifugal Pump	1,671.00
	6401358	Pump Outlet Plumbing with Orificed Boom Sections	2,410.00
35-UN30	6401485	500 Gallon (1893 L) Liquid Fertilizer Tank (Mounting Cradle)	4,080.00
	6401524	Electric Pump and Variable Rate Drive	388.00
	6401525	Tank Plumbing for Electric Pump	1,580.00
	6401358	Pump Outlet Plumbing with Orificed Boom Sections	2,410.00
35-UN29	6401485	500 Gallon (1893 L) Liquid Fertilizer Tank (Mounting Cradle)	4,080.00
	6401539	Centrifugal Pump and Variable Rate Drive	6,612.00
	6401493	Tank Plumbing for Centrifugal Pump	1,671.00
	6401495	Pump Outlet Plumbing	500.00
	6400216	Flow Divider	3,917.00
35-UN31	6401485	500 Gallon (1893 L) Liquid Fertilizer Tank (Mounting Cradle)	4,080.00
	6401524	Electric Pump and Variable Rate Drive	388.00
	6401525	Tank Plumbing for Electric Pump	1,580.00
	6401495	Pump Outlet Plumbing	500.00
	6400216	Flow Divider	3,917.00

ORDER CODE	CATALOG NUMBER	DESCRIPTION	APPROX. WEIGHT (lb.)	LIST PRICE

➢➢Factory Installed➣➣ Continued

9824 LIQUID FERTILIZER TANK PACKAGES

Note: CF10 - With 2 and 3 Bushel Hoppers, allows the use of 750 Gallon Fertilizer Tank Package

35-UN02	6400208	750 Gallon (2839 L) Liquid Fertilizer Tank		4,080.00
35-UN13	6400208	750 Gallon (2839 L) Liquid Fertilizer Tank		4,080.00
	6401519	Dual Piston Pump and Contact Wheel Drive		5,870.00
	6401522	Tank Plumbing to Dual Piston Pump		843.00
	6401492	Pump Outlet Plumbing with Orificed Boom Sections		2,410.00
35-UN16	6400208	750 Gallon (2839 L) Liquid Fertilizer Tank		4,080.00
	6401519	Dual Piston Pump and Contact Wheel Drive		5,870.00
	6401522	Tank Plumbing to Dual Piston Pump		843.00
	6401513	Pump Outlet Plumbing		500.00
	6400216	Flow Divider		3,917.00
35-UN32	6400208	750 Gallon (2839 L) Liquid Fertilizer Tank		4,080.00
	6401539	Centrifugal Pump and Variable Rate Drive		6,612.00
	6401512	Tank Plumbing for Centrifugal Pump		1,254.00
	6401528	Pump Outlet Plumbing with Orificed Boom Sections		2,410.00
35-UN33	6400208	750 Gallon (2839 L) Liquid Fertilizer Tank		4,080.00
	6401524	Electric Pump and Variable Rate Drive		388.00
	6401527	Tank Plumbing for Electric Pump		1,156.00
	6401528	Pump Outlet Plumbing with Orificed Boom Sections		2,410.00
Tow Behind - Requires Factory Installed Rear Tow Hitch				
35-UN20	6401519	Dual Piston Pump and Contact Wheel Drive		5,870.00
	6401541	Plumbing Kit for Tow Behind		394.00
	6401513	Pump Outlet Plumbing		500.00
	6400216	Flow Divider		3,917.00

➢➢Factory Installed➣➣ REAR TOW HITCH - Order One per Planter Required

24-Row Planters

31-P710	6400267	Without Tow Hitch for 2 and 3 Bushel Hoppers		No Charge
31-P700	6400266	Without Tow Hitch for 90 Bushel CFS	25	No Charge
31-P708	6400207	Rear Tow Hitch for 2 and 3 Bushel Hoppers	270	1,314.00
31-P709	6400268	Rear Tow Hitch for 90 Bushel CFS		1,314.00

Note: Rear Tow Hitch is for towing up to 2,000 gallon (7570L) Liquid Fertilizer Tank

Note: CF12 Central Fill with 500 Gallon Liquid Fertilizer Tanks, if require Rear Tow Hitch, must order Dealer Installed 6001228

ORDER CODE	CATALOG NUMBER	DESCRIPTION	APPROX. WEIGHT (lb.)	LIST PRICE
➢➢**Factory Installed**➣➣ **FERTILIZER OPENER PACKAGES**				**Optional**
<u>Fertilizer Openers - Includes Mounting Brackets</u> - Order One Per Planter				
12-Row Planter				
19-K202	6400906	Single Disc Fertilizer Openers - Liquid Side Knife		9,847.00
19-K201	6400907	Double Disc Fertilizer Openers		6,766.00
16-Row Planter				
19-K202	6400775	Single Disc Fertilizer Openers - Liquid Side Knife		13,129.00
19-K201	6400772	Double Disc Fertilizer Openers		9,022.00
24-Row Planter				
19-K202	6400776	Single Disc Fertilizer Openers - Liquid Side Knife		19,695.00
19-K201	6400773	Double Disc Fertilizer Openers		13,533.00

Note: Single Disc Side Knife Fertilizer Opener is Not for Use with Row Unit Mounted Tillage Coulter/ Residue Manager Combo.

◆◆Dealer Installed◆◆<u>Liquid Fertilizer Opener Hose</u>

	6100200	Roll of Fertilizer Opener Hose, 3/8 inch x 48 Feet (Order 4 Rolls for 9812, 6 Rolls for 9816, and 8 Rolls for 9824)	92.00

ORDER CODE	CATALOG NUMBER	DESCRIPTION	APPROX. WEIGHT (lb.)	LIST PRICE

◆◆Dealer Installed◆◆ Liquid Fertilizer Attachment - Order One per Planter or See Item for Order Quantity — Optional

How To Order Dealer Installed Liquid Fertilizer Attachment:

1. Order 1 Liquid Fertilizer Tank (Includes Brackets).
2. Order Rear Tow Hitch if desired
3. Order Tank Plumbing Kit if desired
4. Order Single or Double Piston Pump and Contact Wheel Drive
5. Order Pump Plumbing Package
6. Order Flow Divider or Outlet Manifold
7. Order Opener Hose
8. Order Fertilizer Openers and Mounting Brackets if desired. See page 78

Liquid Fertilizer Tanks and Mounting Brackets

6001394	300 Gallon (1136 L) Liquid Fertilizer Tank , 9812		2,749.00
6001207	750 Gallon (2839 L) Liquid Fertilizer Tank		4,080.00

Rear Tow Hitch - For Towing up to 2,000 Gallon (7570 L) Liquid Fertilizer Tank

6001393	Rear Tow Hitch for 9812 with Tow-Behind Liquid Fertilizer Plumbing		1,708.00
6001228	Rear Tow Hitch for 9816 and 9824	280	1,314.00

Tank Plumbing Kit - Includes Hoses and Fittings

6001465	Tank Plumbing Kit For 300 Gallon, 9812		789.00
6001395	Tank Plumbing Kit For 750 Gallon, 9812		899.00
6001218	Tank Plumbing Kit For 750 Gallon, 9816 and 9824	50	882.00
6001219	Tank Plumbing Kit For Tow-Behind Liquid Fertilizer Tank, 9816, 9824	30	393.00

Fertilizer Pumps and Drives

6001446	Single Piston Pump and Contact Wheel Drive, 9812		3,961.00
6001856	Single Piston Pump and Contact Wheel Drive, 9816	65	4,072.00
6001857	Double Piston Pump and Contact Wheel Drive, 9824.	110	5,095.00
6001463	Contact Wheel Drive without Pump, 9812	115	1,976.00
6001855	Contact Wheel Drive without Pump, 9816 and 9824	115	1,976.00

Fertilizer Drive Lock-Up

6001487	Fertilizer Drive Lock-Up, 9812		151.00

Pump Plumbing Kit - Single or Double Piston Pumps

Piston Pump Plumbing Kit requires Flow Divider or Outlet Manifold

(Includes Fittings and Hose to Flow Divider or Outlet Manifold)

6001086	Piston Pump Plumbing Kit, 9816	5	256.00
6001220	Piston Pump Plumbing Kit, 9824	15	499.00

Flow Divider or Outlet Manifold Completing Package - Required for Piston Pump Only

6001454	12 Row Flow Divider (for use with 9812)		1,958.00
6000647	16 Row Flow Divider		2,865.00
6100199	12 Row Flow Divider (for use with 9824; Order Quantity 2)		1,958.00
6100219	16 Row Outlet Manifold (with Orifices and Check Valves)		1,484.00
6100195	12 Row Outlet Manifold (with Orifices and Check Valves) (Order Quantity 1 for 12 Row; Quantity 2 for 24 Row)		872.00

Liquid Fertilizer Opener Hose

6100200	Roll of Fertilizer Opener Hose, 3/8 inch x 48 Feet (Order 4 Rolls for 9812, 6 Rolls for 9816, and 8 Rolls for 9824)		92.00

ORDER CODE	CATALOG NUMBER	DESCRIPTION	APPROX. WEIGHT (lb.)	LIST PRICE

◆◆Dealer Installed◆◆ Liquid Fertilizer Attachment — Optional

Fertilizer Openers for Liquid Fertilizer - Order One per Two Row Units

6000527	Single Disc Fertilizer Opener - Liquid Side Knife		1,293.00
6001486	Double Disc Opener - 13-1/2 inch Diameter, 9812	75	803.00
6100459	Double Disc Opener - 13-1/2 inch Diameter, 9816 and 9824	75	803.00

Note: Single Disc Fertilizer Openers can not be used with Tillage/Coulter Residue Manager Combination

Fertilizer Opener Mounting Brackets - Order One per Planter
(For use with Double Disc or Side Knife Fertilizer Openers Only)

6001484	Fertilizer Opener Mounting Brackets for Double Disc, 9812		3,378.00
6001485	Fertilizer Opener Mounting Brackets for Single Disc, 9812		3,378.00
6001215	Fertilizer Opener Mounting Brackets, 9816	340	3,097.00
6001216	Fertilizer Opener Mounting Brackets, 9824		4,705.00
6001068	Offset Shank Set for Single Disc Fertilizer Openers 9816 and 9824 only **Order One per Four Rows** (Required to Mount Liquid Side Knife)	101	240.00

9831 Narrow Transport, Narrow Row Folding Planter

9831 Narrow Transport, Narrow Row Folding Planter with Central Fill System

F.O.B. Hesston, Kansas

STANDARD EQUIPMENT

- 90 Bushel, 2 Section, Central Seed Hopper and Seed Distribution System
- 7" x 7" Two Section Forward Folding Frame (Three Section Flex in Planting Position)
- Hydraulic Frame Cylinders, Hoses, and Frame Transport Locks
- Planter Units with: Cover and Meter Assembly with Exclusive "Edge Drop" Air Metering, 16" Double Disc Openers, 4.5"x 16" Walking Beam Gauge Wheels
- Chain Drive
- Hi-Flotation Tires on Oscillating Dual Wheels, (4) 32x15.5-16.5, 14 Ply
- Hi-Flotation Tires on Wings, (2) 31.5 x 15.5-15, 8 Ply
- Highway Transport Lighting and Marking
- Highway Transport Chain
- 1-1/2" Seed Delivery Hoses
- Split Rows Include Row Unit Lock-Ups
- Hydraulic Variable Rate Drive
- CFS Blower: 13" Diameter Fan, 12cc Piston Type Orbit Motor
- Two Seed Metering Blowers, Flow Control Valve, Air Pressure Gauges, Air Manifold and Flex Hoses
- Requires 3 Tractor Remotes if Using 10 GPM PTO Pump with 6.4 Gallon Reservoir (1 for Lift System, 1 for Frame Fold and Markers, and 1 for Central Fill Blower)
- Requires 4 Tractor Remotes if Using Direct Drive (1 for Seed Metering Blowers and Hydraulic Drive Motor, 1 for Lift System, 1 for Frame Fold and Markers, and 1 for Central Fill Blower)

Model 9831 Central Fill System (CFS) planter is designed for planting corn, soybeans, milo, popcorn, and wheat.

# Rows	Spacing	Center Frame	Wings	Transport Width	Transport Height	Storage Length
31	15"	194"	134"	155" (3.94m)	152" (3.86m)	29' (8.84m)

Ordering Instructions:
Planters are now available with many items Factory Installed.
Factory Installed items are not eligible for return to the factory.

1. Select One Order Code from Base, and One Order Code from Each Group as Required.
2. Order Required Seed Discs from 9000 Series Dealer Installed Section.
3. Additional Dealer Installed Items can be Ordered for these Models from this Chapter and from 9000 Series Dealer Installed Section.
4. Accepts Row Unit Mounted Tillage Attachments Only.
5. If Row Unit Mounted Tillage Coulter and Residue Manager combo are used on 30" Row Spacing, Row #1 and #16 accept 10" Residue Wheels only. Tillage Coulter / Residue Manager combo is not adaptable for 15" Row Spacing.

ORDER CODE	CATALOG NUMBER	DESCRIPTION	APPROX. WEIGHT (lb.)	LIST PRICE
NARROW TRANSPORT, NARROW ROW FOLDING PLANTER				
WP9831	9831903YH	31 Row 15-inch Planter	22000	154,726.00

ORDER CODE	CATALOG NUMBER	DESCRIPTION	APPROX. WEIGHT (lb.)	LIST PRICE
➢➢**Factory Installed**➣➣		**MARKERS - Order One per Planter**		**Required**
2-P214	6400121	Tri-Fold Break-Away Markers with Gauge Wheel and Notched Discs	2167	11,492.00
2-P210	6000841	Without Markers.		No Charge
➢➢**Factory Installed**➣➣		**HYDRAULIC SUPPLY SYSTEM - Order One per Planter** **(Also Order from PTO Pump Adapter Group below)**		**Required**
21-P801	6400055	10 GPM PTO Pump with 6.4 Gallon Reservoir		2,067.00
21-P802	6400061	Direct Drive and Hoses (Uses Existing Tractor Hydraulics)	30	148.00
◆◆**Dealer Installed**◆◆		**PTO PUMP ADAPTER - Order One per Planter**		**Required**
	6000747	1000 RPM PTO Pump Adapter for 1-3/4 inch Shaft		167.00
	6000748	1000 RPM PTO Pump Adapter for 1-3/8 inch Shaft		167.00
	6000777	Without PTO Pump Adapter (For Use with 21-P802)		No Charge
➢➢**Factory Installed**➣➣		**SEED TUBES AND SENSORS - Order One per Planter**		**Required**
16-P301	6401048	Seed Tubes with High Rate Sensors		5,690.00
16-P303	6401049	Seed Tubes with Seed Smart Sensors		9,340.00
➢➢**Factory Installed**➣➣		**SEED DELIVERY HOSES - Order One per Planter**		**Required**
11-P010	6401170	Without Split Row Seed Block-Off Manifold (Restricts Planter to 15-inch Row Spacing for Soybeans)		No Charge
11-P011	6401171	Split Row Seed Block-Off Manifold (Plant 30-inch Rows and Block-Off Split Rows)		354.00
➢➢**Factory Installed**➣➣		**CLOSING SYSTEM - Order One per Planter**		**Required**
NOTE: Angled Closing Wheels are factory installed in the staggered position with the left wheel forward and with two spacers under the wheels.				
12-LR11	6401052	Angled Bracket with Rubber Closing Wheels	19	8,913.00
12-LR12	6401053	Angled Bracket with Cast Closing Wheels	54	10,261.00
12-LR13	6401054	Angled Bracket Without Closing Wheels (Order Closing Wheels from 9000 Series Dealer Installed Section)		5,032.00
12-LR10	6400803	Without Closing Wheels.		No Charge

ORDER CODE	CATALOG NUMBER	DESCRIPTION	APPROX. WEIGHT (lb.)	LIST PRICE
◆◆Dealer Installed◆◆		**MONITOR SYSTEM - Order One per Planter**		**Required**
		Requires 6000923 Radar Ground Speed and Distance Sensing Gun or Radar "Y" Harness.		
		For Use on Tractor with Radar.		
	6001396	C3000 Terminal / Monitor		5,299.00
	6001313	C1000 Terminal / Monitor		2,803.00
	6000993	Without Monitor (Order only if Tractor is Equipped with an Existing ISO Terminal / Monitor)		No Charge
◆◆Dealer Installed◆◆		**GROUND SPEED SENSOR - Order One per Planter**		**Required**
	6000923	Radar Ground Speed and Distance Sensing Gun	15	1,049.00
	6100064	Radar "Y" Harness (4 pin round tractor connector to 4 pin round monitor connector)		152.00
	6000810	Without Ground Speed and Distance Sensing (For Use with 6000993) (Uses Existing Radar)		No Charge
➢➢Factory Installed➣➣		**SECTION CONTROL SHUT-OFF - Order One per Planter**		**Required**
		Not Compatible with Auto Row Shut-Off		
32-7P01	6400058	Without Section Control Third-Width Shut-Off		No Charge
32-7P02	6400057	Section Control Third-Width Shut-Off (Includes 3 Clutches and Harness)	50	3,009.00
➢➢Factory Installed➣➣		**ADDITIONAL EQUIPMENT - Order One per Planter**		**Optional**
33-BZ01	6400756	Blower Inlet Screen (Not for Use with P802, Direct Drive)		198.00
7-PS01	6401060	Row Unit Gauge Wheel Scrapers (31 Row)		1,086.00
	71427873W	Ship Safe Preservative Coating (Recommended for Protection When Shipped in Winter Months)		604.00

Note: Part # 72515753 - Radar "Y" Harness
(4 pin flat tractor connector to a 4 pin round monitor connector)
(Above Two "Y" Harnesses for tractors equipped with Radar Speed Sensing)

ORDER CODE	CATALOG NUMBER	DESCRIPTION	APPROX. WEIGHT (lb.)	LIST PRICE
➢➢Factory Installed➣➣ DOWN PRESSURE SYSTEM - Order One per Planter				**Required**
23-KB12	6401057	Heavy Duty Down Pressure Springs	12	6,282.00
23-KB10	6400027	Without Down Pressure Springs		No Charge
➢➢Factory Installed➣➣ ROW UNIT MOUNTED TILLAGE - Order One per Planter				**Required**
Heavy Duty Down Pressure Springs Recommended				
25-VA10	6400021	Without Unit Mounted Tillage Attachment		No Charge
25-VA13	6400561	Tillage Coulter with Ripple Blade		9,800.00
25-VA15	6400577	Tillage Coulter with 13 Flute Blade		9,800.00
25-VA18	6400585	Tillage Coulter with 25 Flute Blade		9,800.00
For 31 Row (on 30-inch Row Width - Not Interplant Rows)				
25-VA16	6401160	Residue Manager - Finger Wheel 13-inch Steel Wheel with 16 Fingers (For Use without Tillage Coulters)		6,145.00
25-VA19	6401159	Residue Manager - SharkTooth® Wheel 13-inch Steel Wheel with 12 Teeth (For Use without Tillage Coulters)		6,637.00
25-VA20	6401158	Floating Residue Manager - SharkTooth® Wheel with Depth Band, 13-inch Steel Wheel with 12 Teeth (For Use without Tillage Coulters)		8,996.00
25-VA11	6400545	Tillage Coulter without Blade (Order Coulter Blades from 9000 Series Dealer Installed Section)		8,452.00
◆◆Dealer Installed◆◆ GRANULAR INSECTICIDE ATTACHMENT				**Optional**
Granular Insecticide Attachment - Order One Per Two Rows				
NOTE: Not for use with Row Unit Lock-up Option				
	6001844	Granular Insecticide Kit with Brackets For use with CFS Mini-Hoppers Only (Not for use with 2 or 3 Bushel Hoppers)		1,236.00

NOTE: Liquid Fertilizer Attachments are *NOT* available for this model.

RESERVED

9936 Large Frame Folding Planters on Tracks

9936 Large Frame Folding Planters on Tracks

F.O.B. Wahpeton, North Dakota

FRAME COMPONENTS -- STANDARD EQUIPMENT

- **Tool Bar for White Planter Completing Components**
  - Rubber Track System: 30 inch x 67 inch or 25 inch x 67 inch
  - 150 Bushel CFS System
  - 7” x 7” Heavy Duty Main Bar
  - Tongue 12" x 12" Structural Tube with 10" x 10" Auto Latch Telescoping Tongue
  - Hydraulic Forward Folding Wings
  - Wings Rotate up 90 Degrees for Narrow Transport
  - Swivel Implement Hitch (2-inch or 2-3/4 inch Pin)
  - Adjustable Wing Wheel
  - Hydraulic Controlled Jack
  - Highway Transport Chain
  - Transport Warning Lights
  - SMV Sign and Mounting
- Hydraulics - 60 Ft and 66 Ft
  - 4 Lift Sequencing Cylinders
  - 2 Wing Fold Cylinders with Tongue Latch
  - 4 Tool Bar Tilt Cylinders
  - Complete with Hose, Hardware and Hydraulic Couplers
- Hydraulics - 90 Ft
  - 8 Lift Sequencing Cylinders
  - 4 Wing Fold Cylinders with Tongue Latch
  - 8 Tool Bar Tilt Cylinders
  - Complete with Hose, Hardware and Hydraulic Couplers

Model 9936 Central Fill Systems (CFS) are designed for planting corn, soybeans, milo, and popcorn.

Ordering Instructions:

1. Order Large Frame Folding Planter on Tracks Tool Bar and Options.
2. Order Frame Completing Components and Options from page 106.

Tractor Requirements:

-12 Volt Electrical System

-Uses Tractor Hydraulic Remotes (Direct Drive)

-Four Hydraulic Remotes with Total Minimum Flow of 55 GPM (208 LPM) Needed for:

1. Hydraulic Seed Drive and Seed Singling Blowers
2. Lift System for Frame Components
3. Frame Fold
4. Hydraulic Hitch Jack

ORDER CODE	CATALOG NUMBER	DESCRIPTION	APPROX. WEIGHT (lb.)	LIST PRICE
PULL-TYPE FORWARD FOLD TOOL BAR				
WP9900-20	350438AW	60 Foot 36 Row 20-inch Planter	18548	74,882.00
WP9900-22	350439AW	66 Foot 36 Row 22-inch Planter	18557	76,042.00
WP9900-30	242205AW	90 Foot 36 Row 30-inch Planter	29748	115,752.00

ORDER CODE	CATALOG NUMBER	DESCRIPTION	APPROX. WEIGHT (lb.)	LIST PRICE
➢➢Factory Installed➣➣		**RUNNING GEAR - Order One per Planter**		**Required**
	354719AW	Axle 120-inch Center for 30-inch Wide Track with 30" x 67" Rubber Track System (Payload NOT to exceed 70,000 lbs. - Row Units Included) (For use with WP9900-20, 9900-22, 9900-30)	6200	43,543.00
	354720AW	Axle 110-inch Center for 25-inch Wide Track with 25" x 67" Rubber Track System (Dual Track, Open Center Tread) (Payload NOT to exceed 60,000 lbs. - Row Units Included) (For use with WP9900-22)	5750	42,358.00
	354721AW	Axle 120-inch Center for 25-inch Wide Track with 25" x 67" Rubber Track System (Payload NOT to exceed 60,000 lbs. - Row Units Included) (For use with WP9900-20 and WP9900-22)	5800	42,402.00
➢➢Factory Installed➣➣		**HITCH - Order One per Planter**		**Required**
	241305AW	Swivel Hitch Cat. IV (for 2 inch Pin)	60	382.00
	243805AW	Swivel Hitch Cat. V (for 2-3/4 inch Pin)	67	382.00
➢➢Factory Installed➣➣		**SEED TANKS - Order One per Planter**		**Required**
	248030AW	Set of Two 75 Bushel Seed Tanks and Covers (without Fill System) Includes Mounts, Platform and Rear Staircase	2418	11,730.00
➢➢Factory Installed➣➣		**CENTRAL FILL PACKAGE - Order One per Planter**		**Required**
		Includes Hi-Pressure 6-inch Fan and Hydraulic Motor, Mixing Chamber Below Tank, Horizontal Seed Tubes Deliver Seed to Row Units, Twin Tank Delivery		
	350436AW	Central Fill Package (WP9000-20)	967	12,700.00
	350437AW	Central Fill Package (WP9000-22)	1020	13,150.00
	247319AW	Central Fill Package (WP9000-30)	1275	14,995.00
➢➢Factory Installed➣➣		**ROW MARKERS - Order One per Planter**		**Optional**
	353077AW	Hydraulic Row Markers (WP9900-20)	2195	10,710.00
	353078AW	Hydraulic Row Markers (WP9900-22)	2334	10,874.00
➢➢Factory Installed➣➣		**ADDITIONAL EQUIPMENT - Order One per Planter**		**Optional**
	350888AW	(2) 750 Gallon Liquid Fertilizer Tanks with Mounting Hardware	1680	6,154.00
	355416AW	Cleated Belt Tube Conveyor Fill System 20 Bushels per minute, For use with Seed Tender, 10 Foot Conveyor Hopper Fill Height	325	5,500.00
	247394AW	Digi-Star Scale System For Seed or Liquid Fertilizer	10	2,829.00
	353267AW	Weight Ballast Package Adds Weight to Wings in lieu of Markers to Help Provide Consistent Planting Depth on 60 Foot and 66 Foot Wings and 90 Foot Outer Wings (Cannot be used in Conjunction with Markers)	1673	2,310.00

9936 Large Frame Folding Planters on Tracks

F.O.B. Hesston, KS

COMPLETING COMPONENTS -- STANDARD EQUIPMENT

- 7” x 7” Secondary Rear Bar (Rotates 90 Degrees, Raising the Row Units for Transport)
- Planter Row Units Mounted on the Rear Bar
- Planter Units with:
  - Air Metering
  - Mini-Hopper for CFS System
    Includes Small, Large and Blank Seed Meter Screens
  - 16 inch Double Disc Openers
  - 4.5” x 16” Walking Beam Gauge Wheels
  - Flex Shaft Seed Meter Drive with Electric Clutch, Auto Row Shut-Off with Dual Row Control
  - Pneumatic Row Unit Down Pressure System with Compressor
- Seed Singling Blowers with:
  - Hydraulic Flow Control Valve
  - Air Pressure Gauge
  - Blower Inlet Screen
- Micro Processor Controlled Variable Rate Hydraulic Drive
  - Three Section Disconnect
  - Seed Drive Disconnect – Implement Lift Switch
- Direct Drive Hydraulic Couplers

Note: Seed Meter Blower Mounted Oil Coolers not Provided

Model 9936 Central Fill Systems (CFS) are designed for planting corn, soybeans, milo, and popcorn.

Dimensions for Frame and Completing Components:

# Rows	Spacing	Center Frame	Inner Wing	Outer Wing	Transport Width	Transport Height	Storage Length
36	20"	16' 2"	21' 6"	- - -	16' 2"	12' 8"	37' 6"
36	22"	16' 2"	24' 6"	- - -	16' 2"	12' 8"	37' 6"
36	30"	15' 0"	22' 6"	15' 0"	15' 0"	12' 8"	56' 0"

Ordering Instructions:
Planters are now available with many items Factory Installed.
Factory Installed items are not eligible for return to the factory.

1. Order Large Frame Folding Planter on Tracks Tool Bar and Options from page 104.
2. Order Frame Completing Components and Options.
3. Order Required Seed Discs from 9000 Series Dealer Installed Section.
4. Additional Dealer Installed Items can be Ordered for these Models from this Chapter and from 9000 Series Dealer Installed Section.
5. **Granular Chemical Attachment not Compatible with Model 9936**.
6. Accepts Row Unit Mounted Tillage Attachments Only
7. C3000 Terminal / Monitor and 10Hz or Stronger GPS Receiver are Required to Operate Standard Equipment Auto Row Shut-Off System

ORDER CODE	CATALOG NUMBER	DESCRIPTION	APPROX. WEIGHT (lb.)	LIST PRICE
LARGE FRAME FOLDING PLANTERS ON TRACKS				
WP9936-20	9936910YH	36 Row 20-inch Planter		120,603.00
WP9936-22	9936911YH	36 Row 22-inch Planter		123,778.00
WP9936-30	9936912YH	36 Row 30-inch Planter		133,607.00

ORDER CODE	CATALOG NUMBER	DESCRIPTION	APPROX. WEIGHT (lb.)	LIST PRICE
◆◆Dealer Installed◆◆		**COMMUNICATION MODULE - Order One per Planter**		**Required**
	6001400	Communication Module with 6 Programmable Toggle Switches for use with Flex Shaft Seed Meter Drive. Six Toggle Switches Provide Manual Control for Six Sections		509.00

The programmable communication module with toggle switches also provide manual back-up when using the Auto Row Shut-Off feature of the C3000 Terminal / Monitor if GPS signal is lost.

➢➢Factory Installed➣➣		**SEED TUBES AND SENSORS - Order One per Planter**		**Required**
16-P301	6401132	Seed Tubes with High Rate Sensors		6,607.00
16-P303	6401133	Seed Tubes with Seed Smart Sensors		10,847.00

➢➢Factory Installed➣➣		**CLOSING SYSTEM - Order One per Planter**		**Required**
NOTE: Angled Closing Wheels are factory installed in the staggered position with the left wheel forward and with two spacers under the wheels.				
12-LR11	6401134	Angled Bracket with Rubber Closing Wheels	19	10,350.00
12-LR12	6401135	Angled Bracket with Cast Closing Wheels	54	11,916.00
12-LR14	6401137	Single “V” Trench Press Wheel	21	9,833.00
12-LR13	6401136	Angled Bracket without Closing Wheels (Order Closing Wheels from 9000 Series Dealer Installed Section)		5,843.00
12-LR10	6400803	Without Closing Wheels		No Charge

◆◆Dealer Installed◆◆		**MONITOR SYSTEM - Order One per Planter**		**Required**
Requires 6000923 Radar Ground Speed and Distance Sensing Gun. **For Use on Tractor with Radar.** **If Tractor is Equipped with an Integrated C3000 Terminal / Monitor, Order 6000993.**				
	6001396	C3000 Terminal / Monitor		5,299.00
	6000993	Without Monitor (C3000 Terminal / Monitor is Required)		No Charge

Note: C3000 Terminal / Monitor required with Flex Shaft Seed Meter Drive

◆◆Dealer Installed◆◆		**GROUND SPEED SENSOR - Order One per Planter**		**Required**
	6000923	Radar Ground Speed and Distance Sensing Gun	15	1,049.00

➢➢Factory Installed➣➣		**ADDITIONAL EQUIPMENT - Order One per Planter**		**Optional**
7-PS01	6401139	Row Unit Gauge Wheel Scrapers		1,261.00
	71428520W	Ship Safe Preservative Coating (Recommended for Protection When Shipped in Winter Months)		604.00

ORDER CODE	CATALOG NUMBER	DESCRIPTION	APPROX. WEIGHT (lb.)	LIST PRICE
➢➢Factory Installed➣➣ ROW UNIT MOUNTED TILLAGE - Order One per Planter				**Required**
Heavy Duty Down Pressure Springs or Pneumatic Down Pressure Recommended				
25-VA10	6400021	Without Unit Mounted Tillage Attachment		No Charge
25-VA13	6400562	Tillage Coulter with Ripple Blade		11,382.00
25-VA15	6400578	Tillage Coulter with 13 Flute Blade		11,382.00
25-VA18	6400586	Tillage Coulter with 25 Flute Blade		11,382.00
25-VA16	6401140	Residue Manager - Finger Wheel 13-inch Steel Wheel with 16 Fingers (For Use without Tillage Coulters)		13,826.00
25-VA19	6401141	Residue Manager - SharkTooth® Wheel 13-inch Steel Wheel with 12 Teeth (For Use without Tillage Coulters)		14,933.00
25-VA20	6401143	Floating Residue Manager - SharkTooth® Wheel with Depth Band, 13-inch Steel Wheel with 12 Teeth (For Use without Tillage Coulters)		20,242.00
25-VA11	6400546	Tillage Coulter without Blade (Order Coulter Blades from 9000 Series Dealer Installed Section)		9,816.00
➢➢Factory Installed➣➣ COMBINATION RESIDUE MANAGER - Order 1 per Planter				**Optional**
Requires Factory Installed Row Unit Mounted Tillage Coulter (VA13, VA15, VA18 or VA11) Recommend Heavy Duty Down Pressure Springs or Pneumatic Down Pressure				
26-K102	6400602	Residue Manager Attachment 10-inch Steel Wheel with 16 Fingers and Bearing Shields		13,826.00
26-K103	6400610	Residue Manager Attachment 13-inch Steel Wheel with 16 Fingers and Bearing Shields		13,711.00
26-K104	6400618	Residue Manager Attachment 13-inch Steel SharkTooth® Wheel with 12 Teeth		14,819.00
26-K101	6400594	Residue Manager without Spoke Wheels (Order Wheels from 9000 Series Dealer Installed Section)		3,437.00

9000 Series
Dealer Installed Equipment

ORDER CODE	CATALOG NUMBER	DESCRIPTION	APPROX. WEIGHT (lb.)	LIST PRICE

ADDITIONAL EQUIPMENT — Optional

SEED DISCS

NOTE: For additional information on Seed Disc Applications, refer to Seed Disc Information in Operator's Manual.

Seed Discs - Order <u>One Per Two</u> Row Units (Unless Otherwise Noted)

6100024	Large Corn Seed Disc (30 Cell) (1,100 - 1,400 seeds per lb.)	1	41.00
6100023	Regular Corn Seed Disc (30 Cell) (1,300 - 1,900 seeds per lb.)	1	41.00
6100032	Small Corn Seed Disc (30 Cell) (1,600 - 2,800 seeds per lb.)	1	41.00
6001839	Flat Corn Seed Disc. (30 Cell) (1200 - 2100 seeds per lb.)		41.00
6000709	Extremely Small Corn/Popcorn Seed Disc (30 Cell) (3,200 - 4,500 seeds per lb.)	1	41.00
6100027	Very Small Corn, Sunflower, Popcorn Seed Disc (30 Cell) (2,400 - 3,600 seeds per lb.)	1	41.00
6001000	Small Sunflower Seed Disc (30 Cell) (22/64-26-64 length x 11/64-18/64 girth)		41.00
6001001	Tickler Brush, Special (Order One for Eight Rows) (For use with 6001000)		62.00
6000698	Small Soybean Seed Disc (120 Cell) (3,000 - 4,500 seeds per lb.)	1	41.00
6100025	Soybean Seed Disc (120 Cell)	1	41.00
6100026	Soybean Seed Disc (60 Cell)	1	41.00
6000703	Sugar Beet Seed Disc (60 Cell) (for 4M Sugar Beet Pellets) (9.5/64 - 11.5/64 Dia. Seed, 12,000 - 14,000 seeds per lb.) (For Milo, 13,500 - 17,500 seeds per lb.)	1	41.00
6100031	Edible Bean Seed Disc (50 Cell)	1	41.00
6100253	Natto Bean Seed Disc (120 Cell)	3	141.00
6100028	Cotton - Large Pelletized Sugar Beet Seed Disc (60 Cell)	1	41.00
6001311	Small Cotton Seed Disc (60 Cell) (4,000 - 4,800 seeds per lb.)	1	41.00
6100130	Hill Drop Cotton Seed Disc (20 Cell) (3 seeds per hill)	2	141.00
6001840	Canola Seed Disc (120 Cell) (Seed size: 0.075 to 0.110 inches) (1.905 to 2.794 mm)	1	41.00
6100029	Sorghum-Milo Seed Disc (120 Cell)	1	41.00
6100129	Segmented Sugar Beet Seed Disc (60 Cell) (8/64 - 11/64 Dia. Seed, 27,500 - 42,000 seeds per lb.) (for 2M Sugar Beet Pellets, Pelletized)	1	41.00
6001946	Components for 60 Cell Sugar Beet Seed Disc (9000 Series) (Includes Conductive Cutoff Brush)		47.00
6100254	Sugar Beet Seed Disc (60 Cell) (for 5M Sugar Beet Pellets) (11/64 - 14/64 Dia. Seed, 8,500 seeds per lb.)	3	141.00
6100106	Snap Bean Seed Disc (60 Cell) (1,200 - 2,500 seeds per lb.)	1	41.00
6100222	Wheat Seed Disc.	1	41.00
6001125	High Rate Virginia Peanut Seed Disc (38 Cell / High Air Flow) (550 seeds per lb.)		141.00

ORDER CODE	CATALOG NUMBER	DESCRIPTION	APPROX. WEIGHT (lb.)	LIST PRICE

ADDITIONAL EQUIPMENT — Optional

ROW UNIT and ACCESSORIES

Includes Parallel Links, 16-inch Double Disc Opener, 4.5-inch x 16-inch Walking Beam Gauge Wheels, Seed Tube and High Rate Sensor, U-Bolts for 7x7 Toolbar

6001799	Complete Row Unit with High Rate Sensor Includes One-Piece Mounting Bracket with Holes for Mounting Pneumatic Down Pressure Does not include: Press/Closing Wheels Drive Sprocket, Chain and Tensioner Engage/Disengage Mechanism or Mounting Plate 2 or 3 Bushel Hopper and Meter or Support Bracket		1,629.00

Hopper Support Kit

6001420	Hopper Support Bracket for 2 or 3 Bushel Hopper to Attach Hoppers and Meters to 6001799		92.00

Note: If Flex Shaft Seed Meter Drive is Installed on the Row Unit, Order Part Number 700177960 Engage/Disengage Mechanism Mounting Plate. Plate is included in the Chain Drive Kit, Catalog Number 6001801 below.

Chain Seed Meter Drive

6001801	Chain Drive Kit Includes Chain, Sprockets, Tensioner, Engage/Disengage Mechanism and Mounting Plate		123.00

ROW UNIT ACCESSORIES

Hoppers and Meters Assembly for Row Unit (Order One per Row)
(Does Not Include the Hopper Support Bracket Required for use with 6001799 Row Unit Above when Installing 2 or 3 Bushel Seed Hopper and Meter.)

6001646	Two-Bushel Hopper and Meter	30	792.00
6001647	Three-Bushel Hopper and Meter	35	929.00
6001648	CFS Mini-Hopper and Meter	30	682.00

Seed Hoppers (without Meter Assembly) (Order One per Row)
(Includes Hopper, Sealed Lid and Handle)

6001773	Two-Bushel Hopper	30	242.00
6001774	Three-Bushel Hopper	35	370.00
6001778	CFS Mini-Hopper		168.00

Flex Shaft Seed Meter Drive (ORDER ONE PER PLANTER)
(Includes Electric Clutch for Each Row and Switch Module and Harness For Auto Row Shut-Off)

6001494	Flex Shaft Seed Meter Drive, 9202 and 9222		6,600.00
6001469	Flex Shaft Seed Meter Drive, 9792		6,600.00
6001470	Flex Shaft Seed Meter Drive, 9776		8,800.00
6001478	Flex Shaft Seed Meter Drive, 9812		6,684.00
6001483	Flex Shaft Seed Meter Drive, 9816		8,912.00
6001706	Flex Shaft Seed Meter Drive, 9824		13,367.00

ORDER CODE	CATALOG NUMBER	DESCRIPTION	APPROX. WEIGHT (lb.)	LIST PRICE
ADDITIONAL EQUIPMENT				**Optional**
Closing System for Row Unit (includes Brackets)(Order One Per Row)				
	6001653	Single “V” Trench Press Wheel	20	273.00
	6001650	Angled Bracket with Rubber Closing Wheels	19	287.00
	6001651	Angled Bracket with Cast Closing Wheels	54	331.00
	6001652	Angled Bracket without Closing Wheels		163.00
Closing Wheels (Order One per Row)				
	6100103	Angled Rubber Closing Wheels, without Bracket (Requires Planter be Equipped with 12-LR13, Angled Bracket without Closing Wheel)	19	116.00
	6100101	Angled Cast Closing Wheels, without Bracket (Requires Planter be Equipped with Angled Rubber Closing Wheels or 12-LR13, Angled Bracket without Closing Wheel)	46	174.00
Seed Tubes and Sensors (ORDER ONE PER ROW)				
	6100287	Seed Tube with High Rate Sensor		183.00
	6000804	Seed Tube with Seed Smart Sensor Requires SM400SE Monitor, ISO C1000 or C3000 Terminal/Monitor or other ISO Terminal		302.00
U-Bolts for Mounting Row Units (ORDER ONE PER ROW)				
	2087169	U-Bolt Set for 7" x 7" Frame	5	30.00
	6001237	Metric U-Bolt Set for 7" x 7" Frame		30.00
Miscellaneous (ORDER ONE PER ROW)				
	6001809	Row Unit Lock Up Kit		211.00
	6001175	Row Unit 6-inch Set Back Bracket with Chain	20	173.00
	6000902	Split Row Seed Block Off Manifold, 9831 (Plant 30-inch Rows and Block Off Split Rows)		354.00
	6001688	Gauge Wheel Mud Scraper (4 Rows)		117.00
Seed Drain				
	6001797	Seed Drain Kit	5	65.00

ORDER CODE	CATALOG NUMBER	DESCRIPTION	APPROX. WEIGHT (lb.)	LIST PRICE

ADDITIONAL EQUIPMENT — Optional

Section Control Shut-Off (ORDER ONE PER PLANTER)

NOTE: For Use with Chain Drive Seed Meter Only
Section Control Clutches are not compatible with Flex Shaft/Automatic Row Shut-Off

6001325	Section Control Half-Width Shut-Off, 9202 (Includes 2 Clutches, Controller and Harness)		1,895.00
6001328	Section Control Half-Width Shut-Off, 9222 (Includes 2 Clutches, Controller and Harness)		1,895.00
6001474	Section Control Third-Width Shut-Off, 9500 Series (Includes 3 Clutches and Harness, Controller is integrated into Fold Control Box for MY2016 Planter and later.)	52	3,003.00
6001304	Section Control Four-Section Shut-Off, 9792 and 9776 (Includes 4 Clutches, Controller and Harness)		4,918.00
6001456	Section Control Half-Width Shut-Off, 9812 (Includes 2 Clutches and Harness, Controller is integrated into Fold Control Box) For use with Ground or Hydraulic Drive	25	2,500.00
6001413	Section Control Half-Width Shut-Off, 9816 and 9824 (Includes 2 Clutches and Harness, Controller is integrated into Fold Control Box for MY2016 Planter and later.) For use with Ground Drive Only (ISO Terminal Controlled "Half Width Disconnect" is Standard on Hydraulic Drive)	25	2,500.00
6001974	Section Control Third-Width Shut-Off, 9831 (Includes 3 Clutches and Harness, Controller is integrated into Fold Control Box for MY2017 Planter and later.)	52	3,503.00

DOWN PRESSURE SYSTEM

Down Pressure Springs for Row Unit (Order <u>One Per Two</u> Row Units)

6001689	Standard Duty Down Pressure Springs (5 - 115 lbs) (Not Compatible with Row Unit Mounted Attachments)	7	129.00
6000588	Heavy Duty Down Pressure Springs (30 - 480 lbs)	24	403.00

Pneumatic Down Pressure
For Use on 9106, 9108, 9702, 9708, and 9722 Models Only

6001842	Pneumatic Down Pressure (4 Row Set) Order One per 4 Rows **Requires Compressor and Hose**		896.00
6001466	Pneumatic Down Pressure Compressor	20	844.00
6001370	Pneumatic Down Pressure Hose (100 Feet) (Plumbs Up to 12 Rows)		181.00

Pneumatic Down Pressure System (Order One per Planter)
(Includes Compressor and Hose)

6001707	Pneumatic Down Pressure System, 9202, 9222	340	3,532.00
6001482	Pneumatic Down Pressure System, 9776	500	3,584.00
6001481	Pneumatic Down Pressure System, 9792	500	2,688.00
6001448	Pneumatic Down Pressure System, 9812	240	3,532.00
6001708	Pneumatic Down Pressure System, 9816	340	4,428.00
6001709	Pneumatic Down Pressure System, 9824	500	6,146.00

ORDER CODE	CATALOG NUMBER	DESCRIPTION	APPROX. WEIGHT (lb.)	LIST PRICE

ADDITIONAL EQUIPMENT — Optional

TILLAGE ATTACHMENTS and ACCESSORIES

NOTE: Only ONE of the Following Tillage Attachments can be used at a time:

Tillage Coulters
12" Disc Furrower
Bed Leveler Attachment
Strip-Ridge Till Coulters
Spring Tine Tillage Attachment

Row Unit Mounted Tillage Coulters (Order One Per Row)

Heavy Duty Down Pressure Springs or Pneumatic Down Pressure System Recommended

6001691	Tillage Coulter with Bubble Blade	41	316.00
6001692	Tillage Coulter with Ripple Blade	41	316.00
6001693	Tillage Coulter with 8 Flute Blade	39	316.00
6001694	Tillage Coulter with 7/8 inch - 13 Flute Blade	37	316.00
6001695	Tillage Coulter with 25 Flute Blade		316.00
6001658	Trash Masters - 12-inch Solid Blades	34	378.00

Residue Managers

Heavy Duty Down Pressure Springs or Pneumatic Down Pressure System Recommended

6001250	Residue Manager Attachment, 13-inch Steel Wheel with 16 Fingers and Bearing Shields (For Use with Tillage Coulters) (Not for Use with 9524-20 Planter)	42	381.00
6001249	Residue Manager Attachment, 10-inch Steel Wheel with 16 Fingers and Bearing Shields (For Use with Tillage Coulters) (Not for Use with 9524-20 Planter)	42	384.00
6001245	Residue Manager - SharkTooth® Wheel Attachment 13-inch Steel Wheel with 12 Teeth (For Use with Tillage Coulters) (Not for Use with 9524-20 Planter)		412.00
6001655	Residue Manager Attachment, 13-inch Steel Wheel with 16 Fingers and Bearing Shields (For Use without Tillage Coulters)	42	384.00
6001656	Residue Manager with SharkTooth® Wheel 13-inch Steel Wheel with 12 Teeth (For Use without Tillage Coulters)		415.00
6001657	Floating Residue Manager - SharkTooth® Wheel with Depth Band 13-inch Steel Wheel with 12 Teeth (For Use without Tillage Coulters)		562.00

Residue Manager Wheels

To Convert From One Residue Manager Wheel Type to another without Changing Mounting Bracket or for use with K101.

6001008	10-inch Spoke Wheels	345.00
6001009	13-inch Spoke Wheels	311.00
6001244	SharkTooth® Residue Manager Wheels Only	321.00

ORDER CODE	CATALOG NUMBER	DESCRIPTION	APPROX. WEIGHT (lb.)	LIST PRICE

ADDITIONAL EQUIPMENT — Optional

Frame Mounted Spring Cushion Tillage Coulters (Order One Per Row)
Includes U-Bolts (For use on 9100, 9180 only)
(Not Recommended for use on 9708, 9702 and 9722)

6001254	7/8 inch - 13 Flute Blade		454.00
6001255	7/8 inch - 8 Flute Blade	55	454.00
6001256	3/4 inch Bubble Blade	56	454.00
6001257	5/16 inch Ripple Blade	56	454.00
6001258	5/8 inch - 25 Flute Blade		454.00

Frame Mounted Strip-Ridge Till Coulters (Order One Per Row)
Includes U-Bolts (For use on 9100, 9180 only)
(Not Recommended for use on 9708, 9702 and 9722)

6001259	7/8 inch - 13 Flute Blade		671.00
6001261	7/8 inch - 8 Flute Blade	74	671.00
6001262	3/4 inch Bubble Blade	75	671.00
6001260	5/16 inch Ripple Blade	75	671.00
6001263	5/8 inch - 25 Flute Blade		671.00

Coulter Blades (Without Bracket) (Order One per Row)
For Use with 25-VA11 Only

6100102	7/8 inch - 13 Flute Blade		42.00
6100110	7/8 inch - 8 Flute Blade	5	42.00
6100111	3/4 inch Bubble Blade	6	42.00
6100112	5/16 inch Ripple Blade	6	42.00
6100113	5/8 inch - 25 Flute Blade		42.00

ORDER CODE	CATALOG NUMBER	DESCRIPTION	APPROX. WEIGHT (lb.)	LIST PRICE

ADDITIONAL EQUIPMENT — Optional

FERTILIZER OPENERS and ATTACHMENTS

NOTE: See Charts on the Following Pages for Applications

Fertilizer Openers for Granular Fertilizer - Order One Per Two Row Units

6000526	Single Disc Fertilizer Opener - Dry Side Knife		1,308.00
6000535	Single Disc Fertilizer Opener (25 Wave) Dry Trailing Knife with Multi Wave Blade		1,293.00
6000356	Single Disc Fertilizer Opener (50 Wave) Dry Trailing Knife with Ripple Blade (Includes One Right and One Left Hand Coulter)	186	1,319.00

Fertilizer Openers for Liquid Fertilizer - Order One Per Two Row Units

6000525	Single Disc Fertilizer Opener - Liquid Injector (Requires Orifice Tip or Nozzle to Complete - Source Locally)		1,293.00
6000527	Single Disc Fertilizer Opener - Liquid Side Knife		1,293.00
6000534	Single Disc Fertilizer Opener (25 Wave) Liquid Trailing Knife with Multi Wave Blade		1,293.00
6000355	Single Disc Fertilizer Opener (50 Wave) Liquid Trailing Knife with Ripple Blade (Includes One Right and One Left Hand Coulter)	176	1,319.00

Fertilizer Openers for Granular or Liquid - Order One Per Two Row Units

6100459	Double Disc Opener - 13-1/2 inch Diameter.	75	803.00
6001486	Double Disc Opener - 13-1/2 inch Diameter, 9812	75	803.00

ORDER CODE	CATALOG NUMBER	DESCRIPTION	APPROX. WEIGHT (lb.)	LIST PRICE

ADDITIONAL EQUIPMENT — Optional

Fertilizer Opener Brackets - (Order One per Planter, unless otherwise noted)
SEE CHART for APPLICATIONS

6001150	Bracket Set for Single Disc Fertilizer Openers	28	122.00
6000609	Offset Shank Set for Single Disc Fertilizer Openers (Order One per Four Rows)	101	240.00
6001106	Fertilizer Opener Bracket Set (Right and Left Hand) (Order One per Two Rows)		323.00

Bracket Chart for Single Disc Fertilizer Openers

(Double Disc Openers do not require brackets for models 9100 and 9180. Bracket RH and LH required for 9200 Series.)

MODEL	Without Tillage Attachments	Row Unit Mounted			Frame Mounted	
		Residue Mgr or Trash Master	Tillage Coulters Only	Tillage Coulters & Residue Mgr Combination	Tillage Coulters Only	Tillage Coulters & Residue Mgr Combination
9100 Rigid Frame	6001150	6001150	6001150	6001150	6001150	6001150
9180 (Dry Knife Requires Part # N852889, Adapter Tube)	6000609	6000609	6000609	6000609 (Only #6000526 & 6000527 Side Knife Can Be Used)	Can Not Be Used	
9202 and 9222	6000609, 6001106	6000609, 6001106	6000609, 6001106	Can Not Be Used	Can Not Be Used	

Liquid Fertilizer Pumps
NOT FOR USE WITH SOME PLANTERS

2086019	Squeeze Pump (Order 1 for 9106, Order 2 for 9182)	34	961.00
2086029	Squeeze Pump (Order 1 for 9108, Order 2 for 9186)	55	1,441.00
6001070	Single Piston Pump (9100, 9180, 9200, 9812, 9816)		2,097.00
6001069	Double Piston Pump (9824)		3,121.00
6001226	Contact Drive for Piston Pump (To Move Piston Pump from Planter Seed Drive to Contact Drive Tire System. For 9100, 9180)		790.00

9800 Series Narrow Transport Folding Planter Fertilizer Bracket Chart

Brackets for Double Disc Fertilizer Openers

		Row Unit Mounted			Frame Mounted
Model	Without Tillage Attachments	Residue Mgr or Trash Master	Tillage Coulters Only	Tillage Coulters & Residue Mgr Combination	
9812	6001484	6001484	6001484	6001484	Frame Mounted Tillage Coulters Not Applicable
9816	(1) 6001215	(1) 6001215	(1) 6001215	(1) 6001215	
9824	(1) 6001216	(1) 6001216	(1) 6001216	(1) 6001216	

Brackets for Single Disc Side Knife Fertilizer Openers

		Row Unit Mounted			Frame Mounted
Model	Without Tillage Attachments	Residue Mgr or Trash Master	Tillage Coulters Only	Tillage Coulters & Residue Mgr Combination	
9812	6001485	6001485	6001485	Can Not Be Used	Frame Mounted Tillage Coulters Not Applicable
9816	(1) 6001215 (4) 6001068	(1) 6001215 (4) 6001068	(1) 6001215 (4) 6001068	Can Not Be Used	
9824	(1) 6001216 (6) 6001068	(1) 6001216 (6) 6001068	(1) 6001216 (6) 6001068	Can Not Be Used	

ORDER CODE	CATALOG NUMBER	DESCRIPTION	APPROX. WEIGHT (lb.)	LIST PRICE
Fertilizer Opener Mounting Brackets (Order One per Planter)				
	6001484	Fertilizer Opener Mounting Brackets for Double Disc, 9812		3,378.00
	6001485	Fertilizer Opener Mounting Brackets for Single Disc, 9812		3,378.00
	6001215	Fertilizer Opener Mounting Brackets for 9816	340	3,097.00
	6001216	Fertilizer Opener Mounting Brackets for 9824		4,705.00
Offset Shanks (Order One per Four Rows)				
	6001068	Offset Shank Set for Single Disc Fertilizer Openers for 9816/9824 Only (Required to Mount Liquid Side Knife)	101	240.00

9000 Series Granular Insecticide Attachments

Granular Insecticide Attachments (Order One per Two Row Units, unless otherwise noted)
NOT FOR USE WITH FLEX SHAFT SEED METER DRIVE OR ROW UNIT LOCKUP OPTION

	6001843	Granular Insecticide Kit with Brackets. For use with 2 Bushel Hoppers Only (Not for use with 3 Bushel Hoppers)	1,236.00
	6001844	Granular Insecticide Kit with Brackets. For use with CFS Mini-Hoppers Only (Not for use with 2 or 3 Bushel Hoppers)	1,236.00
	6001845	Extension Harness and Light Bracket Kit Required for Models 9182 and 9186 Only **(Order One Per Planter)**	81.00
	6100221	Insecticide Hopper Seal Kit For use on the 9722 Row Units on the Wings	81.00
	6001947	Granular Fertilizer Hopper Seal Kit	81.00

ORDER CODE	CATALOG NUMBER	DESCRIPTION	APPROX. WEIGHT (lb.)	LIST PRICE
		MARKERS AND ACCESSORIES - Order One Per Planter		**Optional**
		Markers (Without Marker Disc)		
	6001154	Rigid Markers for 9106	208	1,236.00
	6001155	Folding Markers for 9108	383	2,719.00
	6001156	Folding Markers for 9182	381	4,079.00
	6001157	Folding Markers for 9186		5,438.00
	6001166	Folding Markers for 9708		2,719.00
	6001282	Folding Markers for 9702 and 9722		4,079.00
		Marker Discs with Hub, Bearing, and Bracket (For Use with Rigid and Folding Markers Above)		
	6100094	Notched Marker Discs	30	458.00
		Flat Fold Markers with Notched Marker Discs (Includes Markers and Cylinders)		
	6001159	Flat Fold Markers for 9108	950	5,554.00
	6001160	Flat Fold Markers for 9182 (Will not work with Granular Fertilizer Attachments)	931	8,034.00
	6001161	Flat Fold Markers for 9186	1392	10,712.00
	6001204	Tri-Fold Markers for 9200		5,720.00
	6001163	Tri-Fold Markers for 9523	1000	5,720.00
	6000869	Tri-Fold Markers for 9524-20	1658	11,451.00
	6000870	Tri-Fold Markers for 9524-22	1658	11,590.00
	6001169	Flat Fold Markers for 9708	1000	5,447.00
	6001170	Flat Fold Markers for 9702	1000	6,110.00
	6001168	Rear Folding Markers for 9772		8,886.00
	6001303	Rear Folding Markers for 9792 and 9776		10,960.00
	6001391	Bi-Fold Markers for 9812		6,791.00
	6000999	Tri-Fold Markers for 9816	1544	11,337.00
	6001025	Tri-Fold Markers 9824	1544	16,068.00
	6000901	Tri-Fold Markers for 9831		11,492.00

Model	Cat. Number	Hydraulic Cylinders	Break-Away Feature	Hydraulic Hoses	Sequence Valve
9106	6001154	X			
9108	6001155	X			
9182	6001156	X			
9186	6001157	X		X	
9708	6001166	X		X	X
9702/9722	6001282	X		X	X
9108	6001159	X	X	X	
9182	6001160	X	X		
9186	6001161	X	X		
9200	6001204	X	X	X	X
9523	6001163	X	X	X	
9524-20	6000869	X		X	X
9524-22	6000870	X		X	X
9708	6001169	X	X	X	X
9702	6001170	X	X	X	X
9772	6001168	X			
9792/9776	6001303	X			
9812	6001391	X	X	X	X
9816	6000999	X	X	X	X
9824	6001025	X	X	X	X
9831	6000901	X	X	X	

ORDER CODE	CATALOG NUMBER	DESCRIPTION	APPROX. WEIGHT (lb.)	LIST PRICE

ADDITIONAL EQUIPMENT — Optional

MISCELLANEOUS

Seed Chart

	6100232	Seed Rate Chart Decal Package, ... 36-inch and 40-inch Row Spacing, for Ground Drive Planters	29.00

Displays

	6000599	Display Cart for Complete Row Unit (6001799)	331.00
	6001838	White Planter Row Unit Display . . . . . (Includes 9000 Series Row Unit with seed tube mounted on 2-wheel display stand, seed meter with two-bushel hopper and decals on two sides, angled rubber closing wheels, flex shaft seed drive with electric clutch, pneumatic down pressure less compressor, and gauge wheel mud scrapers)	3,760.00

Miscellaneous Options

	2086669	Basic Drive Wheel Arm Rock Guard (9100 and 9180) . . . . . (One Required for Two Drive Wheels)	43	197.00
	6000797	Blower Inlet Screen	3	99.00
	6001059	Set of Two Blower Inlet Screens (9816 and 9824) . . . . . (Order One per Planter)	6	200.00
	6100057	Transmission Shield (9100, 9180, 9700) . . . . . (Recommended for Heavy Trash Conditions) (Not for use with Contact Drive Transmissions)		25.00

Stroke Control Segments

	2087129	Cylinder Stops -Includes (2) 4-3/8 inch . . . . . and (2) 3-3/4 inch Stops (One per 6 and 8 Row; Two per 12 and 16 Row) (Required when Planting on Ridges)	7	66.00

ORDER CODE	CATALOG NUMBER	DESCRIPTION	APPROX. WEIGHT (lb.)	LIST PRICE

ADDITIONAL EQUIPMENT — Optional

MISCELLANEOUS

Miscellaneous Planter Components

NOTE: When mounting White Row Units on another manufacturer's toolbar, contact toolbar manufacturer for assembly instructions and list of components required.

6100014	Blower	58	1,348.00
6100095	Manifold Package (Includes transition for blower, elbows and air hoses to accommodate 13 row units. Additional components will be required depending on toolbar and row configuration.)	59	694.00
2087429	120-inch Air Duct	15	96.00
6001126	Seed Transmission for Row Unit Drive (Drive Shafts Not Included)	66	918.00

Blower Drive for Air System
Seed Singling Blower Drive for Planters with one (1) Blower
NOT FOR HYDRAULIC DRIVE PLANTERS

3.3 GPM

6001047	540 RPM PTO Pump	37	1,524.00
6001048	1000 RPM PTO Pump for 1-3/8 inch Spline Shaft	34	1,678.00
6001049	1000 RPM PTO Pump for 1-3/4 inch Spline Shaft		1,678.00
2086049	Direct Drive (Uses Existing Tractor Hydraulics)	2	76.00

PTO Hydraulic Pump and Reservoir for Hydraulic Drive Planters

6000749	10 GPM PTO Pump with 6.4 Gallon Reservoir (for 9500 Series Only) Requires PTO Pump Adapter # 6000747 or 6000748, Requires some Modification to Mount to Planters.		2,089.00
6001330	14 GPM PTO Pump with 8.5 Gallon Reservoir (for 9816 and 9824 Hydraulic Drive Planters Only) Requires PTO Pump Adapter # 6000747 or 6000748, Requires some Modification to Mount to Planters.		2,089.00
6001449	40 GPM PTO Pump with 25 Gallon Reservoir and 1-3/8 inch PTO Spline Shaft (for 9812 Hydraulic Drive Planters Only) Does Not Require PTO Pump Adapter, Requires some Modification to Mount to Planters.		3,348.00

PTO Pump Adapters

6000747	1000 RPM PTO Pump Adapter for 1-3/4 inch Shaft		167.00
6000748	1000 RPM PTO Pump Adapter for 1-3/8 inch Shaft		167.00

ORDER CODE	CATALOG NUMBER	DESCRIPTION	APPROX. WEIGHT (lb.)	LIST PRICE

ADDITIONAL EQUIPMENT — Optional

MONITORS and ACCESSORIES

Monitors for Ground Drive Planters

6000805	SM100 Seed Flow Monitor (up to 8 Rows)	20	1,194.00
6000806	SM300 Seed Population Monitor (up to 8 Rows) (Requires Magnetic Ground Speed Sensor or Radar Ground Speed and Distance Sensing Gun)	25	1,625.00
6000807	SM400SE Seed Population Monitor (12 and 16 Rows) (Requires Magnetic Ground Speed Sensor or Radar Ground Speed and Distance Sensing Gun)	25	2,324.00
6001214	Monitor Bridge Package (for 12 Rows and More) (For use with Non ISO Ground Drive Planter Using a Tractor Equipped ISO Terminal / Monitor)		1,762.00

Monitors for Hydraulic Drive Planter (or Ground Drive with ISO System CE01)

NOTE: Requires 6000923 Radar Ground Speed and Distance Sensing Gun or 6100064 Radar "Y" Harness. For Use on Tractor with Radar.

6001396	C3000 Terminal / Monitor		5,299.00
6001313	C1000 Terminal / Monitor		2,803.00

Communication Module

6001401	Programmable Toggle Switch Module for use in Combination with 6001400. (Six Manual Toggle Switches) Provides Manual Row Shut-Off for Additional 6 Sections (Total of 12 Sections)		441.00

ORDER CODE	CATALOG NUMBER	DESCRIPTION	APPROX. WEIGHT (lb.)	LIST PRICE

ADDITIONAL EQUIPMENT — Optional

HARNESSES and SENSORS

Harnesses and Sensors

	6100280	CFS Hopper Level Sensor (Plugs into 2 or 4 Channel Terminal / Monitor Harness)	167.00
	2087219	6 Row Harness for High Rate Sensors	295.00
	2087229	8 Row Harness for High Rate Sensors	370.00
	6000923	Radar Ground Speed and Distance Sensing Gun 15	1,049.00
	6100059	Magnetic Ground Speed Sensor for 9108, 9708	160.00
	6000988	Magnetic Ground Speed Sensor for 9772 4	194.00
	6000955	Magnetic Ground Speed Sensor for 9182, 9186, 9702, 9722, 9776, 9792 4	194.00
	6100064	Radar "Y" Harness (4 pin round tractor connector to 4 pin round monitor connector)	152.00

NOTE: Part # 72515753 - Radar "Y" Harness
(4 pin flat tractor connector to a 4 pin round monitor connector)
(Above Two "Y" Harnesses for tractors equipped with Radar Speed Sensing)

Harness Extensions

	6001490	5 Ft Battery Power Harness Extension, 9936 9 For use with many Track Tractors. Extends battery harness to the back of tractor. (9936 Supplied Harness is 12 Ft)	205.00
	6001491	10 Ft Battery Power Harness Extension, 9936 14 For use with many Articulated Tractors. Extends battery harness to the back of tractor. (9936 Supplied Harness is 12 Ft)	256.00
	6100286	15 Ft Extension Harness for Magnetic Distance Sensor 2	50.00

NOTE: Part #700723738 16 Ft ISO Extension Harness (for use with ISO Consoles)

RESERVED

MASSEY FERGUSON®

Technology

Catalog Number	Description	Ordering Information

Quick Reference Guide for Ordering AUTO-GUIDE 3000

AUTO-GUIDE 3000 IS ONLY AVAILABLE ON THE FOLLOWING:

- Model Year 2013 and Newer Massey Ferguson and Challenger Tractors
- Model Year 2012 and Newer SP Windrowers
- Combines Using the C2100 Monitor
- RG700 Sprayers

IMPORTANT: ALL VEHICLES MUST BE FACTORY "GUIDANCE READY"
WATCH BULLETINS FOR FURTHER RELEASES

For Guidance Ready Vehicles: Tractors, SP Windrowers, RG700 Sprayers, or Combines

Based on Product:
The Following Items must be Ordered from Parts to Complete a Base Steering System

HHP Wheeled, Track or Articulated Tractors, SP Windrowers, and RG700 Sprayers

ACZ000039A	AUTO-GUIDE 3000 SubMeter Steering System (uses vehicle terminal, C1000)	Order from Parts

Combines

ACZ000039A	AUTO-GUIDE 3000 SubMeter Steering System (uses vehicle terminal, C2100)	Order from Parts
71441601	Remote Antenna Option ***REQUIRED***	Order from Parts

For WR Series SP Windrowers not ordered with Factory Installed AUTO-GUIDE 3000

Based on Product:
The Following Items must be Ordered from Parts and/or Wholegoods to Complete a Base Steering System

SP Windrowers (WR Series)

ACZ000039A	AUTO-GUIDE 3000 SubMeter Steering System (uses vehicle terminal, C1000)	Order from Parts
and		
700960387M	Wide Cab SP Windrower AUTO-GUIDE 3000 Installation Kit	Order Wholegoods List 346.00
-or-		
700960388M	Narrow Cab SP Windrower AUTO-GUIDE 3000 Installation Kit	Order Wholegoods List 445.00

*Note: If no Auto-Guide Rocker Switch is present in the Windrower cab, follow the 2012 upgrade instructions.

2012 SP Windrowers (WR Series) - UPGRADE INSTRUCTIONS:

If no Rocker Switch is present in the cab, order the two kits below in addition to above listed requirements:

72571047	AUTO-GUIDE 3000 Rocker Switch	Order from Parts
700743763	AUTO-GUIDE 3000 Wiring Harness	Order from Parts

Catalog Number	Description	Ordering Information

AUTO-GUIDE 3000 - Submeter Only

Available to receive WAAS or OmniStar VBS correction signal
(VBS requires annual Subscription from OmniStar)

ACZ000039A	AUTO-GUIDE 3000 Submeter System . . . . . Includes: Receiver to Roof Connector Harness Roof mounting plate English operator manual	Order from Parts

Operator Manuals

ACZ000080A	Spanish operator manual	Order From Tech Pubs
ACZ000082A	French operator manual.	Order From Tech Pubs

AUTO-GUIDE 3000 - Decimeter Upgrade

Add to ACZ000039A to make AUTO-GUIDE 3000 Submeter System able to accept OmniStar XP and HP correction signals with subscription from OmniStar

ACZ000038A	AUTO-GUIDE 3000 Decimeter Snap-in module . . . . . Includes: Snap-in module English operator manual	Order from Parts
71441601	Remote Antenna (Required for Combines)	Order from Parts

Operator Manuals

ACZ0002430	Spanish operator manual	Order From Tech Pubs
ACZ0002450	French operator manual.	Order From Tech Pubs

AUTO-GUIDE 3000 - Centimeter Upgrade

Requires both ACZ000039A and ACZ000038A.
Needs either a COORS Network or a Base Staion.

ACZ000062B	AUTO-GUIDE 3000 Centimeter Snap-in module . . . . . Includes: Snap-in module Rubber Antenna Kit English operator manual	Order from Parts
71441601	Remote Antenna (Required for Combines)	Order from Parts

Operator Manuals

ACZ0002580	Spanish operator manual	Order From Tech Pubs
ACZ0002600	French operator manual.	Order From Tech Pubs

Catalog Number	Description	Ordering Information

AUTO-GUIDE 3000 Miscellaneous Accessories

700960387M	Wide Cab SP Windrower AUTO-GUIDE 3000 Installation Kit (WR Series only)	Order Wholegoods List 346.00
700960388M	Narrow Cab SP Windrower AUTO-GUIDE 3000 Installation Kit (WR Series only)	Order Wholegoods List 445.00
72451225	Tripod TP-100 Heavy Duty with Aluminum Extendable Legs	Order from Parts
AC2000119A	HiPer AG Mobile Base (GPS + GLONASS 900mhz Radio).	Order from Parts
72571047	Rocker Switch for 2012 SP Windrowers	Order from Parts
700743763	Wiring Harness for 2012 SP Windrowers	Order from Parts
4390411M12	Harness to add C3000 Monitor to a 2013 and newer Large Frame . HHP Wheel Tractors (NOTE: ORDER IN ADDITION TO C3000)	Order from Parts
573371D1	Harness to add C3000 Monitor to a 2013 and newer Track Tractor (NOTE: ORDER IN ADDITION TO C3000)	Order from Parts
ACZ000000B	C3000 Monitor only	Order from Parts

Catalog Number	Description	Ordering Information

AGCOMMAND

AgCommand Subscriptions and Hardware are now available as an aftermarket option through AGCO Parts!

AM53 telemetry units support 2G, 3G, GSM, and CDMA cellular networks.

AM50 units only support 2G and GSM cellular networks.
AM50 has an end of service life of January 1st, 2017 when cellular networks stop supporting 2G.
For further details on upgrade options see Parts Bulletin 081561120.

Reference hardware to determine if your telemetry unit is an AM50 vs. AM53:

6xx-xxxx is a AM50

100-xxx-xxxx is a AM53

AgCommand subscriptions available; for further detail see Parts Dealer Bulletin 081561121. Include hardware serial numbers for subscription ordering.

AGCO equipment produced prior to 2013 and all non-AGCO equipment should purchase StandardPlus subscription.

Advanced subscriptions recommended for AGCO production 2013 - present.

AGCOMMAND - HARDWARE

ACZ000163A	AM53 Telemetry Unit	Order from Parts

AGCOMMAND - HARDWARE INSTALLATION KITS

72570238	Universal Field Installation Kit for AGCO Equipment Produced Prior to 2013 and Non-AGCO Equipment . . .	Order from Parts
539686D1	Installation Kit for Challenger MT700/800/900 Produced from 2013-2015	Order from Parts
700179375	Installation Kit for Large Square Balers Produced from 2013 onwards	Order from Parts

AGCOMMAND - RENEWAL OR NEW SUBSCRIPTIONS

ACZ0001650	StandardPlus 1 Year	Order from Parts
ACZ0001660	StandardPlus 2 Years	Order from Parts
ACZ0001670	StandardPlus 3 Years	Order from Parts
ACZ0001680	Advanced 1 Year	Order from Parts
ACZ0001690	Advanced 2 Years.	Order from Parts
ACZ0001700	Advanced 3 Years.	Order from Parts

Catalog Number	Description	Ordering Information

AGCOMMAND

UPGRADE FROM STANDARDPLUS TO ADVANCED SUBSCRIPTIONS

72571801	3 years remaining on StandardPlus subscription	Order from Parts
72571802	2 years, 9 months remaining	Order from Parts
72571803	2 years, 6 months remaining	Order from Parts
72571804	2 years, 3 months remaining	Order from Parts
72571805	2 years remaining	Order from Parts
72571806	1 year, 9 months remaining	Order from Parts
72571807	1 year, 6 months remaining	Order from Parts
72571808	1 year, 3 months remaining	Order from Parts
72571809	1 year remaining	Order from Parts
72571810	9 months remaining	Order from Parts
72571811	6 months remaining	Order from Parts
72571812	3 months remaining	Order from Parts

EXTENSIONS FOR NEW EQUIPMENT SUBSCRIPTIONS
(WITHIN 60 DAYS OF ACTIVATION)

ACZ0004200	StandardPlus 1 Year to 2 Year	Order from Parts
ACZ0004210	StandardPlus 1 Year to 3 Year	Order from Parts
ACZ0004220	Advanced 1 Year to 2 Year	Order from Parts
ACZ0004230	Advanced 1 Year to 3 Year	Order from Parts